AUTHENTICATED
U.S. GOVERNMENT
INFORMATION
GPO

Federal Register

8–10–06 Thursday
Vol. 71 No. 154 Aug. 10, 2006

Pages 45735–46072

The **FEDERAL REGISTER** (ISSN 0097–6326) is published daily, Monday through Friday, except official holidays, by the Office of the Federal Register, National Archives and Records Administration, Washington, DC 20408, under the Federal Register Act (44 U.S.C. Ch. 15) and the regulations of the Administrative Committee of the Federal Register (1 CFR Ch. I). The Superintendent of Documents, U.S. Government Printing Office, Washington, DC 20402 is the exclusive distributor of the official edition. Periodicals postage is paid at Washington, DC.

The **FEDERAL REGISTER** provides a uniform system for making available to the public regulations and legal notices issued by Federal agencies. These include Presidential proclamations and Executive Orders, Federal agency documents having general applicability and legal effect, documents required to be published by act of Congress, and other Federal agency documents of public interest.

Documents are on file for public inspection in the Office of the Federal Register the day before they are published, unless the issuing agency requests earlier filing. For a list of documents currently on file for public inspection, see *www.archives.gov.*

The seal of the National Archives and Records Administration authenticates the Federal Register as the official serial publication established under the Federal Register Act. Under 44 U.S.C. 1507, the contents of the **Federal Register** shall be judicially noticed.

The **Federal Register** is published in paper and on 24x microfiche. It is also available online at no charge as one of the databases on GPO Access, a service of the U.S. Government Printing Office.

The online edition of the **Federal Register** *www.gpoaccess.gov/nara,* available through GPO Access, is issued under the authority of the Administrative Committee of the Federal Register as the official legal equivalent of the paper and microfiche editions (44 U.S.C. 4101 and 1 CFR 5.10). It is updated by 6 a.m. each day the **Federal Register** is published and includes both text and graphics from Volume 59, Number 1 (January 2, 1994) forward.

For more information about GPO Access, contact the GPO Access User Support Team, call toll free 1-888-293-6498; DC area 202-512-1530; fax at 202-512-1262; or via e-mail at *gpoaccess@gpo.gov.* The Support Team is available between 7:00 a.m. and 9:00 p.m. Eastern Time, Monday–Friday, except official holidays.

The annual subscription price for the **Federal Register** paper edition is $749 plus postage, or $808, plus postage, for a combined **Federal Register, Federal Register** Index and List of CFR Sections Affected (LSA) subscription; the microfiche edition of the **Federal Register** including the **Federal Register** Index and LSA is $165, plus postage. Six month subscriptions are available for one-half the annual rate. The prevailing postal rates will be applied to orders according to the delivery method requested. The price of a single copy of the daily **Federal Register,** including postage, is based on the number of pages: $11 for an issue containing less than 200 pages; $22 for an issue containing 200 to 400 pages; and $33 for an issue containing more than 400 pages. Single issues of the microfiche edition may be purchased for $3 per copy, including postage. Remit check or money order, made payable to the Superintendent of Documents, or charge to your GPO Deposit Account, VISA, MasterCard, American Express, or Discover. Mail to: New Orders, Superintendent of Documents, P.O. Box 371954, Pittsburgh, PA 15250-7954; or call toll free 1-866-512-1800, DC area 202-512-1800; or go to the U.S. Government Online Bookstore site, see *bookstore.gpo.gov.*

There are no restrictions on the republication of material appearing in the **Federal Register.**

How To Cite This Publication: Use the volume number and the page number. Example: 71 FR 12345.

Postmaster: Send address changes to the Superintendent of Documents, Federal Register, U.S. Government Printing Office, Washington DC 20402, along with the entire mailing label from the last issue received.

SUBSCRIPTIONS AND COPIES

PUBLIC	
Subscriptions:	
Paper or fiche	**202–512–1800**
Assistance with public subscriptions	**202–512–1806**
General online information	**202–512–1530; 1–888–293–6498**
Single copies/back copies:	
Paper or fiche	**202–512–1800**
Assistance with public single copies	**1–866–512–1800 (Toll-Free)**
FEDERAL AGENCIES	
Subscriptions:	
Paper or fiche	**202–741–6005**
Assistance with Federal agency subscriptions	**202–741–6005**

Printed on recycled paper.

Contents

Federal Register

Vol. 71, No. 154

Thursday, August 10, 2006

Agriculture Department
See Commodity Credit Corporation
See Forest Service

Army Department
RULES
Privacy Act; implementation, 46052–46071
NOTICES
Environmental statements; record of decision:
U.S. Army training lands, AK; battle area complex and combined arms collective training facility; construction and operation; correction, 45902

Bonneville Power Administration
NOTICES
Reports and guidance documents; availability, etc.:
Pacific Northwest power supply after 2011; long-term regional dialogue policy; meetings, 45799–45800

Centers for Medicare & Medicaid Services
See Inspector General Office, Health and Human Services Department

Coast Guard
RULES
Ports and waterways safety; regulated navigation areas, safety zones, security zones, etc.:
Jacksonville Captain of Port Zone, FL, 45736–45739
PROPOSED RULES
Anchorage regulations:
Maine, 45746–45748

Commerce Department
See Economics and Statistics Administration
See International Trade Administration
See Minority Business Development Agency
See National Oceanic and Atmospheric Administration

Commodity Credit Corporation
PROPOSED RULES
Loan and purchase programs:
Grain security for marketing assistance loans; storage requirements, 45744

Consumer Product Safety Commission
PROPOSED RULES
Consumer Product Safety Act and Federal Hazardous Substances Act:
Adult all terrain vehicle requirements and three-wheeled all terrain vehicle ban, 45904–45962

Coordinating Council on Juvenile Justice and Delinquency Prevention
NOTICES
Meetings, 45779–45780

Copyright Office, Library of Congress
RULES
Copyright office and procedures:
Royalties; electronic payment, 45739–45740
PROPOSED RULES
Copyright office and procedures:
Cable compulsory license reporting practices, 45749–45752

Defense Department
See Army Department
NOTICES
Manual for Courts Martial; amendments, 45780–45797

Economics and Statistics Administration
NOTICES
Committees; establishment, renewal, termination, etc.:
Measuring Innovation in 21st Century Economy Advisory Committee, 45766–45767

Education Department
NOTICES
Agency information collection activities; proposals, submissions, and approvals, 45797–45799

Employment and Training Administration
NOTICES
Adjustment assistance; applications, determinations, etc.:
Bernzomatic, 45851
Coleman Cable, Inc., 45851
Delphi Connection Systems, 45851–45852
Hardwick Knitted Fabrics, 45852
House of Perfection, Inc., 45852
Independent Steel Castings Co., 45852
Kent Sporting Goods Co., Inc., 45852–45853
Kroger, Inc., et al., 45853–45854
Richard's Apex, 45854
Rosemount Analytical, Inc., 45854
Grants and cooperative agreement agreements; availability, etc.:
Workforce Investment Act—
Dislocated worker activities; State allotments, 45854–45859

Energy Department
See Bonneville Power Administration
See Energy Information Administration
See Federal Energy Regulatory Commission
See Southwestern Power Administration
See Western Area Power Administration
PROPOSED RULES
Nuclear activities and occupational radiation protection; procedural rules, 45996–46025

Energy Information Administration
NOTICES
Agency information collection activities; proposals, submissions, and approvals, 45800–45801

Environmental Protection Agency
NOTICES
Meetings:
Local Government Advisory Committee, 45830
Water supply:
Public water supply supervision program—
Puerto Rico, 45830–45831

Federal Aviation Administration
PROPOSED RULES
Airworthiness directives:
Schempp-Hirth GmbH & Co. KG, 45744–45746

Federal Energy Regulatory Commission
RULES
Electric utilities (Federal Power Act):
Section 203 transactions; expeditious approval procedures—
Rehearing order; correction, 45736
NOTICES
Complaints filed:
Alabama Municipal Electric Authority, 45812
Chambersburg, PA, 45812–45813
Electric rate and corporate regulation combined filings, 45813–45816
Environmental statements; availability, etc.:
Pacific Gas & Electric Co., 45816
Hydroelectric applications, 45817–45819
Meetings:
Broadwater Energy, LLC, 45819
El Paso Natural Gas Co., 45819
Applications, hearings, determinations, etc.:
Alliance Pipeline L.P., 45801
Bonneville Power Administration, 45801–45802
Canyon Creek Compression Co., 45802
Central Kentucky Transmission Co., 45802–45803
Dominion Energy Kewaunee, Inc., et al., 45803
Dominion Transmission, Inc., 45803
Enbridge Offshore Pipelines (UTOS) LLC, 45803–45804
Florida Gas Transmission Co., 45804
Gas Transmission Northwest Corp., 45804–45805
Horizon Pipeline Co., L.L.C., 45805
Liberty Gas Storage, LLC, 45805
National Fuel Gas Supply Corp., 45805–45806
Natural Gas Pipeline Co. of America, 45806
Northern Natural Gas Co., 45807
Rockies Express Pipeline LLC, 45807–45808
Saltville Gas Storage Co. L.L.C., 45808
SG Resources Mississippi, L.L.C., 45808–45809
Stingray Pipeline Co., L.L.C., 45809
Texas Gas Transmission, LLC, 45809
Trailblazer Pipeline Co., 45809–45810
TransColorado Gas Transmission Co., 45810
Transcontinental Gas Pipe Line Corp., 45810–45811
Western Area Power Administration, 45811–45812

Federal Motor Carrier Safety Administration
RULES
Organization, functions, and authority delegations:
Motor Carrier Financial and Operating Statistics Program; redesignation and implementation, 45740–45743

Federal Reserve System
NOTICES
Banks and bank holding companies:
Formations, acquisitions, and mergers, 45831–45833
Permissible nonbanking activities, 45833

Fish and Wildlife Service
RULES
Migratory bird hunting:
Resident Canada goose populations; management, 45964–45993

Forest Service
NOTICES
Environmental statements; notice of intent:
Plumas National Forest, CA, 45765–45766
Meetings:
Resource Advisory Committees—
Eastern Idaho, 45766

Government Ethics Office
RULES
Executive branch employees; ethical conduct standards:
Intergovernmental Personnel Act detailees; clarification, 45735–45736

Health and Human Services Department
See Indian Health Service
See Inspector General Office, Health and Human Services Department
See National Institutes of Health
NOTICES
Meetings:
Medicaid Commission, 45833–45834

Homeland Security Department
See Coast Guard

Housing and Urban Development Department
NOTICES
Agency information collection activities; proposals, submissions, and approvals; correction, 45902

Indian Health Service
NOTICES
Agency information collection activities; proposals, submissions, and approvals, 45834–45835

Inspector General Office, Health and Human Services Department

NOTICES
Program exclusions; list, 45835–45839

Interior Department
See Fish and Wildlife Service
See Land Management Bureau
See Reclamation Bureau

International Trade Administration
NOTICES
Antidumping:
Cased pencils from—
China, 45767–45768
Cut-to-length carbon steel plate from—
China, 45768–45773
Meetings:
United States Travel and Tourism Promotion Advisory Board, 45773
North American Free Trade Agreement (NAFTA); binational panel reviews:
Oil country tubular goods from—
Mexico, 45773

Justice Department
See Justice Programs Office
NOTICES
Pollution control; consent judgments:
All Oceans Transportation, Inc. et al., 45848
American Iron Oxide Co. and Magnetics International, Inc., 45848–45849

Bean Stuyvesant, LLC, et al., 45849
Chicopee, MA, 45849
Coltec Industries, Inc. et al., 45849–45850
Currahee Club, LLC, et al., 45850
Jamson Laboratories, Inc., 45850–45851

Justice Programs Office
RULES
Public safety officers' death and disability benefits:
Benefits program, 46028–46050

Labor Department
See Employment and Training Administration

Land Management Bureau
NOTICES
Environmental statements; availability, etc.:
Northern San Juan Basin Coal Bed Methane Development Project, CO, 45845
Recreation management restrictions, etc.:
Fort Meade Recreation Area, SD; supplementary rules, 45845–45847

Legal Services Corporation
NOTICES
Reports and guidance documents; availability, etc.:
Budget request for FY 2008; comment request, 45859

Library of Congress
See Copyright Office, Library of Congress

Maritime Administration
NOTICES
Environmental statements; availability, etc.:
Main Pass Energy Hub Liquefied Natural Gas Deepwater Port, LA; license application amendment, 45899–45900

Minority Business Development Agency
NOTICES
Grants and cooperative agreements; availability, etc.:
Minority Business Enterprise Center, 45773–45778

National Aeronautics and Space Administration
NOTICES
Privacy Act; system of records, 45859–45862

National Institutes of Health
NOTICES
Meetings:
National Cancer Institute, 45839
National Center for Research Resources, 45839–45840
National Center on Minority Health and Health Disparities, 45840
National Institute of Allergy and Infectious Diseases, 45840–45841
National Institute of Biomedical Imaging and Bioengineering, 45840
National Institute of Child Health and Human Development, 45841–45843
National Institute of General Medical Sciences, 45842
National Institute of Mental Health, 45842–45843
National Institute on Alcohol Abuse and Alcoholism, 45841, 45843–45844
National Library of Medicine, 45844
Scientific Review Center, 45844

National Oceanic and Atmospheric Administration
PROPOSED RULES
International Fisheries regulations:
South Pacific tuna—
Vessel monitoring system requirements, vessel reporting requirements, area restrictions for U.S. purse seine vessels, etc., 45752–45764
NOTICES
Marine mammal permit applications, determinations, etc., 45778–45779
Meetings:
Commercial Remote Sensing Advisory Committee, 45779

National Science Foundation
NOTICES
Meetings; Sunshine Act, 45862

Nuclear Regulatory Commission
NOTICES
Environmental statements; availability, etc.:
Honeywell Metropolis Works Uranium Conversion Facility; Metropolis, IL, 45862–45864
Operating licenses, amendments; no significant hazards considerations; biweekly notices; correction, 45864
Regulatory guides; issuance, availability and withdrawal, 45864

Reclamation Bureau
NOTICES
Methane Hydrate Research and Development Act of 2000; implementation:
Trinity Public Utilities District assessment; intention to bill Central Valley Project water contractors, 45847–45848

Research and Innovative Technology Administration
RULES
Organization, functions, and authority delegations:
Motor Carrier Financial and Operating Statistics Program; redesignation and implementation, 45740–45743

Securities and Exchange Commission
NOTICES
Agency information collection activities; proposals, submissions, and approvals, 45864–45865
Self-regulatory organizations; proposed rule changes:
Chicago Board Options Exchange, Inc., 45865–45868
International Securities Exchange, Inc., 45868–45876
NASDAQ Stock Market LLC, 45876–45879
National Association of Securities Dealers, Inc., 45879–45885
New York Stock Exchange LLC, 45885–45888
Philadelphia Stock Exchange, Inc., 45888–45890

Social Security Administration
NOTICES
Disability determination procedures; testing modifications:
Disability claims process redesign prototype and single decisionmaker model; tests extension, 45890–45891
Privacy Act; computer matching program, 45891

Southwestern Power Administration
NOTICES
Power rates:
Robert D. Willis Hydropower Project, 45820

State Department
NOTICES
Agency information collection activities; proposals, submissions, and approvals, 45891–45892
Grants and cooperative agreements; availability, etc.:
Summer Language Institutes for American Youth, 45892–45897
Meetings:
International Mobile Satellite Organizations, 45897–45898

Surface Transportation Board
NOTICES
Fees:
Rail fuel surcharges, 45900–45901

Transportation Department
See Federal Aviation Administration
See Federal Motor Carrier Safety Administration
See Maritime Administration
See Research and Innovative Technology Administration
See Surface Transportation Board
NOTICES
Aviation proceedings:
Agreements filed; weekly receipts, 45898
Certificates of public convenience and necessity and foreign air carrier permits; weekly applications, 45898–45899

Western Area Power Administration
NOTICES
Power rates:
Central Valley Project, 45821–45830

Separate Parts In This Issue

Part II
Consumer Product Safety Commission, 45904–45962

Part III
Interior Department, Fish and Wildlife Service, 45964–45993

Part IV
Energy Department, 45996–46025

Part V
Justice Department, Justice Programs Office, 46028–46050

Part VI
Defense Department, Army Department, 46052–46071

Reader Aids

Consult the Reader Aids section at the end of this issue for phone numbers, online resources, finding aids, reminders, and notice of recently enacted public laws.

To subscribe to the Federal Register Table of Contents LISTSERV electronic mailing list, go to http://listserv.access.gpo.gov and select Online mailing list archives, FEDREGTOC-L, Join or leave the list (or change settings); then follow the instructions.

CFR PARTS AFFECTED IN THIS ISSUE

A cumulative list of the parts affected this month can be found in the Reader Aids section at the end of this issue.

5 CFR
2635.....45735

7 CFR
Proposed Rules:
1421.....45744

10 CFR
Proposed Rules:
820.....45996
835.....45996

14 CFR
Proposed Rules:
39.....45744

16 CFR
Proposed Rules:
1307.....45904
1410.....45904
1500.....45904
1515.....45904

18 CFR
33.....45736

28 CFR
32.....46028

32 CFR
505.....46052

33 CFR
165.....45736
Proposed Rules:
110.....45746

37 CFR
201.....45739
Proposed Rules:
201.....45749

49 CFR
369.....45740
1420.....45740

50 CFR
20.....45964
21.....45964
Proposed Rules:
300.....45752

Rules and Regulations

Federal Register
Vol. 71, No. 154
Thursday, August 10, 2006

This section of the FEDERAL REGISTER contains regulatory documents having general applicability and legal effect, most of which are keyed to and codified in the Code of Federal Regulations, which is published under 50 titles pursuant to 44 U.S.C. 1510.

The Code of Federal Regulations is sold by the Superintendent of Documents. Prices of new books are listed in the first FEDERAL REGISTER issue of each week.

OFFICE OF GOVERNMENT ETHICS

5 CFR Part 2635

RIN 3209–AA04

Standards of Ethical Conduct for Employees of the Executive Branch; Amendments To Clarify the Coverage of Detailees to an Agency Under the Intergovernmental Personnel Act

AGENCY: Office of Government Ethics (OGE).

ACTION: Final rule; amendments.

SUMMARY: The Office of Government Ethics is amending the regulation governing standards of ethical conduct for executive branch employees of the Federal Government, to clarify the coverage of employees of State or local governments or other organizations detailed to an agency under the Intergovernmental Personnel Act.

DATES: *Effective Date:* September 11, 2006.

FOR FURTHER INFORMATION CONTACT: Richard M. Thomas, Associate General Counsel, Office of Government Ethics; telephone: 202–482–9300; TDD: 202–482–9293; FAX: 202–482–9237.

SUPPLEMENTARY INFORMATION: On May 11, 2006, the Office of Government Ethics (OGE) published proposed amendments to the Standards of Ethical Conduct for Employees of the Executive Branch (Standards), 5 CFR part 2635, to make clear that detailees from State and local governments and other organizations to an agency, pursuant to the Intergovernmental Personnel Act (IPA), 5 U.S.C. 3374, are subject to the Standards. 71 FR 27427–27429. OGE proposed amending the definition of ''employee,'' in § 2635.102(h) of the Standards, expressly to include ''[e]mployees of a State or local government or other organization who are serving on detail to an agency, pursuant to 5 U.S.C. 3371, *et seq.*'' OGE also proposed adding a new paragraph (d) to § 2635.105 of the Standards, which deals with agency supplemental regulations, to provide that IPA detailees would be subject to any requirements in agency supplemental standards of conduct regulations to the extent that such regulations expressly provide.

OGE received two comments on the proposed amendatory rule, both from agency ethics officials. The first commenter simply concurred in the proposed rule. The second commenter did not raise any substantive issues with respect to the coverage of IPA detailees under the Standards, but instead noted that the commenter's agency was having difficulty applying the post-employment restrictions of 18 U.S.C. 207 to certain IPA detailees. This commenter requested ''that when the OGE clarifies 5 CFR part 2635, [it] also address the post-employment restrictions at 18 U.S.C. 207 as it applies to IPA detailees.''

OGE did not change the proposed rule in response to this request. Part 2635 is not OGE's post-employment regulation. OGE's regulations addressing the post-employment restrictions of 18 U.S.C. 207 are found at 5 CFR part 2641, which is not the subject of this rulemaking. We note, moreover, that OGE already has proposed amendments to part 2641, some of which deal specifically with IPA detailees. *See* 68 FR 7845 (February 18, 2003), at 7870 (proposed definition of ''employee'' includes IPA detailees); and 7881 (application of 18 U.S.C. 207(c) to IPA detailees). Therefore, OGE is publishing the previously proposed amendments to part 2635 in the **Federal Register** as a final rule, with no changes.

As noted in the preamble to the proposed rule, 71 FR 27428, OGE is aware that some agencies already have required certain IPA detailees to agree to follow restrictions in agency supplemental regulations. Such agencies may continue to recognize any agreements in force as of the effective date of the final rule. Moreover, agencies that wish to amend their supplemental regulations to cover IPA detailees, consistent with new § 2635.105(d), may continue to use IPA agreements to obtain commitments to follow current supplemental regulations, pending the promulgation of amendments, for a reasonable period determined in consultation with OGE.

Matters of Regulatory Procedure

Regulatory Flexibility Act

As Director of OGE, I certify under the Regulatory Flexibility Act (5 U.S.C. chapter 6) that this rule will not have a significant economic impact on a substantial number of small entities because it primarily affects Federal employees.

Paperwork Reduction Act

The Paperwork Reduction Act (44 U.S.C. chapter 35) does not apply to this proposed rule because it does not contain an information collection requirement that requires the approval of the Office of Management and Budget.

Unfunded Mandates Reform Act

For purposes of the Unfunded Mandates Reform Act of 1995 (2 U.S.C. chapter 25, subchapter II), this amendatory rule will not significantly or uniquely affect small governments and will not result in increased expenditures by State, local, and tribal governments, in the aggregate, or by the private sector, of $100 million or more (as adjusted for inflation) in any one year.

Congressional Review Act

The Office of Government Ethics has determined that this rulemaking involves a nonmajor rule under the Congressional Review Act (5 U.S.C. chapter 8) and will submit a report thereon to the U.S. Senate, House of Representatives and Government Accountability Office in accordance with that law at the same time that it transmits this final rule to the Office of the Federal Register for publication.

Executive Order 12866

In promulgating this rule, OGE has adhered to the regulatory philosophy and the applicable principles of regulation set forth in section 1 of Executive Order 12866, Regulatory Planning and Review. This final rule has not been reviewed by the Office of Management and Budget under that Executive order, since it deals with agency organization, management and personnel matters, and is not deemed to be ''significant'' thereunder.

Executive Order 12988

As Director of the Office of Government Ethics, I have reviewed this amendatory regulation in light of

section 3 of Executive Order 12988, Civil Justice Reform, and certify that it meets the applicable standards provided therein.

List of Subjects in 5 CFR Part 2635

Conflict of interests, Executive branch standards of ethical conduct, Government employees.

Approved: August 3, 2006.

Robert I. Cusick,

Director, Office of Government Ethics.

■ Accordingly, for the reasons set forth in the preamble, the Office of Government Ethics is amending 5 CFR part 2635 as follows:

PART 2635—STANDARDS OF ETHICAL CONDUCT FOR EMPLOYEES OF THE EXECUTIVE BRANCH

■ 1. The authority citation for part 2635 continues to read as follows:

Authority: 5 U.S.C. 7301, 7351, 7353; 5 U.S.C. App. (Ethics in Government Act of 1978); E.O. 12674, 54 FR 15159, 3 CFR, 1989 Comp., p. 215, as modified by E.O. 12731, 55 FR 42547, 3 CFR, 1990 Comp., p. 306.

Subpart A—General Provisions

■ 2. Section 2635.102 is amended by adding a new sentence after the second sentence of paragraph (h) to read as follows:

§ 2635.102 Definitions.

* * * * *

(h) * * * It includes employees of a State or local government or other organization who are serving on detail to an agency, pursuant to 5 U.S.C. 3371, *et seq.* * * *

* * * * *

■ 3. Section 2635.105 is amended by adding a new paragraph (d) to read as follows:

§ 2635.105 Supplemental agency regulations.

* * * * *

(d) Employees of a State or local government or other organization who are serving on detail to an agency, pursuant to 5 U.S.C. 3371, *et seq.*, are subject to any requirements, in addition to those in this part, established by a supplemental agency regulation issued under this section to the extent that such regulation expressly provides.

[FR Doc. E6–13087 Filed 8–9–06; 8:45 am]

BILLING CODE 6345–02–P

DEPARTMENT OF ENERGY

Federal Energy Regulatory Commission

18 CFR Part 33

[Docket No. RM05–34–002; Order No. 659–B]

Transactions Subject to FPA Section 203

AGENCY: Federal Energy Regulatory Commission, DOE.

ACTION: Final rule; correction.

SUMMARY: This document corrects an error in an order on rehearing that the Federal Energy Regulatory Commission published in the **Federal Register** on July 27, 2006. That action affirmed, with certain clarifications, its determinations in Commission Order Nos. 669 and 669–A.

EFFECTIVE DATE: August 28, 2006.

FOR FURTHER INFORMATION CONTACT: Roshini Thayaparan, Office of the General Counsel, Federal Energy Regulatory Commission at (202) 502–6867.

SUPPLEMENTARY INFORMATION: In FR Document E6–12047, published July 27, 2006 (71 FR 42579), make the following correction:

§ 33.2 [Corrected]

■ On page 42586, in the column 3, in § 33.2 Contents of application—general information requirements, in paragraph (j)(1) introductory text, the word ''transactions'' is corrected to read ''transaction''.

Magalie R. Salas,

Secretary.

[FR Doc. E6–13106 Filed 8–9–06; 8:45 am]

BILLING CODE 6717–01–P

DEPARTMENT OF HOMELAND SECURITY

Coast Guard

33 CFR Part 165

[COTP JACKSONVILLE 06–164]

RIN 1625–AA87

Security Zones; Captain of the Port Zone Jacksonville, FL

AGENCY: Coast Guard, DHS.

ACTION: Temporary final rule.

SUMMARY: The Coast Guard is temporarily establishing security zones around any vessel escorted by one or more Coast Guard, State, or local law enforcement assets within the Captain of the Port Zone Jacksonville, FL. No vessel or person is allowed within 100 yards of an escorted vessel, while within the navigable waters of the Captain of the Port Zone, Jacksonville, FL, unless authorized by the Captain of the Port Jacksonville, FL or designated representative. Additionally, all vessels within 500 yards of an escorted vessel in the Captain of the Port Zone Jacksonville, FL will be required to operate at a minimum speed necessary to maintain a safe course. This action is necessary to protect personnel, vessels, and facilities from sabotage or other subversive acts, accidents, or other events of a similar nature.

DATES: This rule is effective from August 4, 2006 through November 1, 2006.

ADDRESSES: Documents indicated in this preamble as being available in the docket, are part of docket (COTP Jacksonville 06–164) and are available for inspection or copying at Coast Guard Sector Jacksonville Prevention Department, 7820 Arlington Expressway, Suite 400, Jacksonville, FL 32211, between 7:30 a.m. and 4 p.m., Monday through Friday, except Federal holidays.

FOR FURTHER INFORMATION CONTACT: Ensign Kira Peterson at Coast Guard Sector Jacksonville Prevention Department, Florida tel: (904) 232–2640, ext. 108.

SUPPLEMENTARY INFORMATION:

Regulatory Information

We did not publish a notice of proposed rulemaking (NPRM) for this regulation. Under 5 U.S.C. 553(b)(B), the Coast Guard finds that good cause exists for not publishing an NPRM. Security zones around escorted vessels are necessary to ensure the safe transit of the escorted vessels as well as the public. Certain vessel movements are more vulnerable to terrorist acts and it would be contrary to the public interest to publish an NPRM which would incorporate a notice and comment period that would delay the effective date of this regulation.

For the same reasons and under 5 U.S.C. 553(d)(3), the Coast Guard finds that good cause exists for making this rule effective less than 30 days after publication in the **Federal Register**.

Background and Purpose

The terrorist attacks of September 2001 heightened the need for development of various security measures throughout the seaports of the United States, particularly around vessels and facilities whose presence or

movement creates a heightened vulnerability to terrorist acts; or those for which the consequences of terrorist acts represent a threat to national security. The President of the United States has found that the security of the United States is and continues to be endangered following the attacks of September 11 (E.O. 13,273, 67 FR 56215, Sep. 3, 2002). Additionally, national security and intelligence officials continue to warn that future terrorist attacks are likely.

King's Bay, GA, and the Ports of Jacksonville, FL, and Canaveral, FL receive vessels that carry sensitive Department of Defense cargoes as well as foreign naval vessels that require additional safeguards. The Captain of the Port (COTP) Jacksonville has determined that these vessels have a significant vulnerability to subversive activity by vessels or persons within the Jacksonville Captain of the Port Zone, as described in 33 CFR 3.35–20. This rule enables the COTP Jacksonville to provide effective port security, while minimizing the public's confusion and ease the administrative burden of implementing separate temporary security zones for each escorted vessel.

Discussion of Rule

This rule prohibits persons and vessels from coming within 100 yards of all escorted vessels within the navigable waters of the Captain of the Port Zone Jacksonville, FL, as described in 33 CFR 3.35–20. No vessel or person may enter within a 100 yard radius of an escorted vessel unless authorized by the Coast Guard Captain of the Port Jacksonville, FL or his designated representative. Persons or vessels that receive permission to enter the security zone must proceed at a minimum safe speed and must comply with all orders issued by the COTP or his designated representative. Additionally, a vessel operating within 500 yards of an escorted vessel must proceed at a minimum speed necessary to maintain a safe course, unless otherwise required to maintain speed by the navigation rules, and must comply with the orders of the COTP Jacksonville or his designated representative.

Regulatory Evaluation

This rule is not a ''significant regulatory action'' under section 3(f) of Executive Order 12866, Regulatory Planning and Review, and does not require an assessment of potential costs and benefits under section 6(a)(3) of that Order. The Office of Management and Budget has not reviewed it under that Order. It is not ''significant'' under the regulatory policies and procedures of the Department of Homeland Security (DHS).

While recognizing the potential impacts to the public, the Coast Guard believes the security zones are necessary for the reasons described above. However, we expect the economic impact of this rule to be so minimal that a full Regulatory Evaluation under the regulatory policies and procedures of DHS is unnecessary. There is generally enough room for vessels to navigate around these security zones. Where such room is not available and security conditions permit, the Captain of the Port will attempt to provide flexibility for individual vessels as needed.

Small Entities

Under the Regulatory Flexibility Act (5 U.S.C. 601–612), we have considered whether this rule would have a significant economic impact on a substantial number of small entities. The term ''small entities'' comprises small businesses, not-for-profit organizations that are independently owned and operated and are not dominant in their fields, and governmental jurisdictions with populations of less than 50,000.

The Coast Guard certifies under 5 U.S.C. 605(b) that this rule would not have a significant economic impact on a substantial number of small entities. This rule may affect the following entities, some of which may be small entities: The owners or operators of vessels intending to transit King's Bay and the Ports of Jacksonville and Canaveral in the vicinity of escorted vessels. This rule would not have a significant impact on a substantial number of small entities because the zones are limited in size, leaving in most cases ample space for vessels to navigate around them. The zones will not significantly impact commercial and passenger vessel traffic patterns, and mariners will be notified of the zones via Local Notice to Mariners and marine broadcasts. Where such room is not available and security conditions permit, the Captain of the Port will attempt to provide flexibility for individual vessels to transit through the zones as needed.

If you think that your business, organization, or governmental jurisdiction qualifies as a small entity and that this rule would have a significant economic impact on it, please submit a comment (see **ADDRESSES**) explaining why you think it qualifies and how and to what degree this rule would affect it economically.

Assistance for Small Entities

Under section 213(a) of the Small Business Regulatory Enforcement Fairness Act of 1996 (Pub. L. 104–121), we want to assist small entities in understanding this rule so that they can better evaluate its effects on them and participate in the rulemaking. Small businesses may send comments on the actions of Federal employees who enforce, or otherwise determine compliance with, Federal regulations to the Small Business and Agriculture Regulatory Enforcement Ombudsman and the Regional Small Business Regulatory Fairness Boards. The Ombudsman evaluates these actions annually and rates each agency's responsiveness to small business. If you wish to comment on actions by employees of the Coast Guard, call 1–888–REG–FAIR (1–888–734–3247).

Collection of Information

This rule calls for no new collection of information under the Paperwork Reduction Act of 1995 (44 U.S.C. 3501–3520).

Federalism

A rule has implications for federalism under Executive Order 13132, Federalism, if it has a substantial direct effect on State or local governments and would either preempt State law or impose a substantial direct cost of compliance on them. We have analyzed this rule under that Order and have determined that it does not have implications for federalism.

Unfunded Mandates Reform Act

The Unfunded Mandates Reform Act of 1995 (2 U.S.C. 1531–1538) requires Federal agencies to assess the effects of their discretionary regulatory actions. In particular, the Act addresses actions that may result in the expenditure by a State, local, or tribal government, in the aggregate, or by the private sector, of $100,000,000 or more in any one year. Although this rule would not result in such an expenditure, we do discuss the effects of this rule elsewhere in this preamble.

Taking of Private Property

This rule would not affect a taking of private property or otherwise have taking implications under Executive Order 12630, Governmental Actions and Interference with Constitutionally Protected Property Rights.

Civil Justice Reform

This rule meets applicable standards in sections 3(a) and 3(b)(2) of Executive Order 12988, Civil Justice Reform, to

minimize litigation, eliminate ambiguity, and reduce burden.

Protection of Children

We have analyzed this rule under Executive Order 13045, Protection of Children from Environmental Health Risks and Safety Risks. This rule is not an economically significant rule and would not create an environmental risk to health or risk to safety that might disproportionately affect children.

Indian Tribal Governments

This rule does not have tribal implications under Executive Order 13175, Consultation and Coordination with Indian Tribal Governments, because it would not have a substantial direct effect on one or more Indian tribes, on the relationship between the Federal Government and Indian tribes, or on the distribution of power and responsibilities between the Federal Government and Indian tribes. We invite your comments on how this rule might impact tribal governments, even if that impact may not constitute a ''tribal implication'' under the Order.

Energy Effects

We have analyzed this rule under Executive Order 13211, Actions Concerning Regulations That Significantly Affect Energy Supply, Distribution, or Use. We have determined that it is not a ''significant energy action'' under that order because it is not a ''significant regulatory action'' under Executive Order 12866 and is not likely to have a significant adverse effect on the supply, distribution, or use of energy. It has not been designated by the Administrator of the Office of Information and Regulatory Affairs as a significant energy action. Therefore, it does not require a Statement of Energy Effects under Executive Order 13211.

Technical Standards

The National Technology Transfer and Advancement Act (NTTAA) (15 U.S.C. 272 note) directs agencies to use voluntary consensus standards in their regulatory activities unless the agency provides Congress, through the Office of Management and Budget, with an explanation of why using these standards would be inconsistent with applicable law or otherwise impractical. Voluntary consensus standards are technical standards (e.g., specifications of materials, performance, design, or operation; test methods; sampling procedures; and related management systems practices) that are developed or adopted by voluntary consensus standards bodies.

This rule does not use technical standards. Therefore, we did not consider the use of voluntary consensus standards.

Environment

We have analyzed this rule under Commandant Instruction M16475.lD, which guides the Coast Guard in complying with the National Environmental Policy Act of 1969 (NEPA) (42 U.S.C. 4321–4370f), and have concluded that there are no factors in this case that would limit the use of a categorical exclusion under section 2.B.2 of the Instruction. Therefore, we believe that this rule should be categorically excluded, under figure 2–1, paragraph (34)(g), of the Instruction, from further environmental documentation. A final ''Environmental Analysis Check List'' and a final ''Categorical Exclusion Determination'' are available in the docket where indicated under **ADDRESSES**.

List of Subjects 33 CFR Part 165

Harbors, Marine safety, Navigation (water), Reporting and recordkeeping requirements, Security measures, Waterways.

■ For the reasons discussed in the preamble, the Coast Guard amends 33 CFR part 165 as follows:

PART 165—REGULATED NAVIGATION AREAS AND LIMITED ACCESS AREAS

■ 1. The authority citation for part 165 continues to read as follows:

Authority: 33 U.S.C. 1226, 1231; 46 U.S.C. Chapter 701; 50 U.S.C. 191; 33 CFR 1.05–1(g), 6.04–1, 6.04–6, 160.5; Public Law 107–295, 116 Stat. 2064; Department of Homeland Security Delegation No. 0170.1.

■ 2. Add § 165.T07–164 to read as follows:

§ 165.T07–164 Security Zones; King's Bay, GA, and the Ports of Jacksonville, FL, and Canaveral, FL.

(a) *Definitions.* The following definitions apply to this section:

Designated representatives means Coast Guard Patrol Commanders including Coast Guard coxswains, petty officers and other officers operating Coast Guard vessels, and federal, state, and local officers designated by or assisting the Captain of the Port (COTP), Jacksonville, Florida, in the enforcement of the regulated navigation areas and security zones.

Escorted vessel means a vessel, other than a U.S. naval vessel as defined in Sec. 165.2015 that is accompanied by one or more Coast Guard assets or other Federal, State or local law enforcement agency assets as listed below:

(1) Coast Guard surface or air asset displaying the Coast Guard insignia.

(2) Coast Guard Auxiliary surface asset displaying the Coast Guard Auxiliary insignia.

(3) State and/or local law enforcement asset displaying the applicable agency markings and/or equipment associated with the agency.

Minimum Safe Speed means the speed at which a vessel proceeds when it is fully off plane, completely settled in the water and not creating excessive wake. Due to the different speeds at which vessels of different sizes and configurations may travel while in compliance with this definition, no specific speed is assigned to minimum safe speed. In no instance should minimum safe speed be interpreted as a speed less than that required for a particular vessel to maintain steerageway. A vessel is not proceeding at minimum safe speed if it is:

(1) On a plane;

(2) In the process of coming up onto or coming off a plane; or

(3) Creating an excessive wake.

State and/or local law enforcement officer means any State or local government law enforcement officer who has authority to enforce State or local laws.

(b) *Regulated Area.* All navigable waters within the Captain of the Port Zone Jacksonville, FL, as described in 33 CFR 3.35–20.

(c) *Regulations.* (1) A 100 yard Security Zone is established around, and centered on each Escorted vessel within the Regulated Area. This is a moving security zone when the Escorted vessel is in transit and becomes a fixed zone when the Escorted vessel is anchored or moored. The general regulations for Security Zones contained in § 165.33 of this part applies to this section.

(2) A vessel in the Regulated Area operating between 100 yards and 500 yards of an Escorted vessel must proceed at the minimum safe speed, unless otherwise required to maintain speed by the navigation rules, and must comply with the orders of the COTP Jacksonville or his designated representative.

(3) Persons or vessels shall contact the COTP Jacksonville to request permission to deviate from these regulations. The COTP Jacksonville may be contacted at (904) 247–7318 or on VHF channel 16.

(4) The COTP will inform the public of the existence or status of Escorted vessels in the Regulated Area by Broadcast Notice to Mariners.

(d) *Dates.* This rule is effective from August 4, 2006 through November 1, 2006.

Dated: August 3, 2006.

Paul F. Thomas,

Captain, U.S. Coast Guard, Captain of the Port Jacksonville.

[FR Doc. E6–13096 Filed 8–9–06; 8:45 am]

BILLING CODE 4910–15–P

LIBRARY OF CONGRESS

Copyright Office

37 CFR Part 201

[Docket No. RM 2006–4]

Electronic Payment of Royalties

AGENCY: Copyright Office, Library of Congress.

ACTION: Final rule.

SUMMARY: The Copyright Office is publishing a final rule amending its rules governing the submission of royalty fees to the Copyright Office to require such payments to be made by electronic funds transfer.

DATES: October 1, 2006.

FOR FURTHER INFORMATION CONTACT: Tanya M. Sandros, Associate General Counsel, Copyright GC/I&R, P.O. Box 70400, Southwest Station, Washington, DC 20024. Telephone: (202) 707–8380. Telefax: (202) 707–8366.

SUPPLEMENTARY INFORMATION: On April 27, 2006, the Copyright Office published a notice of proposed rulemaking seeking comment on amending its rules requiring the submission of royalty fees to be made by electronic funds transfer. 71 FR 24829 (April 27, 2006). The purpose of this notice is to announce the final rule.

Cable systems and satellite carriers that retransmit broadcast signals in accordance with the provisions governing the statutory licenses set forth in sections 111 and 119 of the Copyright Act, title 17 of the United States Code, respectively, are required to pay royalty fees to the Copyright Office. The Copyright Office also receives statutory fees from manufacturers and importers of digital audio recording devices and media who distribute these products in the United States. 17 U.S.C. chapter 10. Payments made under the cable and satellite carrier statutory licenses are remitted semiannually to the Copyright Office. 17 U.S.C. 111(d)(1) and 119(b)(1). Payments made under the Audio Home Recording Act of 1992 are made quarterly. 17 U.S.C. 1003(c). The Copyright Office invests the royalties in United States Treasury securities pending distribution of these funds to those copyright owners who are entitled to receive a share of the fees. 17 U.S.C. 111(d)(2), 119(b)(2) and 1005.

Under the proposed amended regulations, a number of changes were made regarding the payment of copyright royalties. The most important change was that payment could only be made through an electronic funds transfer (''ETF''). This change eliminates the options of payment by certified or cashier's check, or money order. Most payors already use EFTs, and requiring the use of EFTs substantially enhances the efficiency of the collection process. The proposed regulations also require that the parties submit specific identifying and linking information as part of the EFT, and/or as part of a ''remittance advice'' which accompanies Statement(s) of Account and that the ''remittance advice'' be faxed or emailed to the Licensing Division.

The new rules allow the Copyright Office to return any EFT which fails to properly identify statements to which they relate and requires the remitter to resubmit the EFT correctly. Should this occur, the remitter will be responsible for any assessed interest charge that accrues as a result of a late payment or an underpayment. Additionally, the new rules require that ''remittance advice'' information be included with Statements of Account in order to accurately identify what is submitted and how fees are to be allocated among the statements.

Finally, the new rules include a waiver provision for those situations where there may be circumstances which make it virtually impossible for a remitter to use the electronic payment option or imposes a financial or other hardship. Requests for a waiver must include a statement setting forth the reasons why the waiver should be granted and the statement must be signed by a duly authorized representative of the entity making the payment, certifying that the information provided is true and correct.

In response to the publication of the proposed rules, the Copyright Office did not receive any comments. Consequently, the Copyright Office is adopting the previously proposed text with minor stylistic changes, as final rules.

List of Subjects in 37 CFR Part 201

Copyright.

Final Regulation

■ In consideration of the foregoing, the Copyright Office is amending part 201 of 37 CFR, chapter II in the manner set forth below:

PART 201—GENERAL PROVISIONS

■ 1. The authority citation for part 201 continues to read as follows:

Authority: 17 U.S.C. 702.

■ 2. Revise § 201.11 (f) to read as follows:

§ 201.11 Satellite carrier statements of account covering statutory licenses for secondary transmissions.

* * * * *

(f) *Royalty fee payment.* (1) All royalty fees shall be paid by a single electronic funds transfer and payment must be received in the designated bank by the filing deadline for the relevant accounting period. The following information shall be provided as part of the EFT and/or as part of the remittance advice as provided for in circulars issued by the Copyright Office:

(i) Remitter's name and address;

(ii) Name of a contact person, telephone number and extension, and email address;

(iii) The actual or anticipated date that the EFT will be transmitted;

(iv) Type of royalty payment (i.e. satellite);

(v) Total amount submitted via the EFT;

(vi) Total amount to be paid by year and period;

(vii) Number of Statements of Account that the EFT covers;

(viii) ID numbers assigned by the Licensing Division;

(ix) Legal name of the owner for each Statement of Account.

(2) The remittance advice shall be attached to the Statement(s) of Account. In addition, a copy of the remittance advice shall be emailed or sent by facsimile to the Licensing Division.

(3) The Office may waive the requirement for payment by electronic funds transfer as set forth in paragraph (f)(1) of this section. To obtain a waiver, the remitter shall submit to the Licensing Division at least 60 days prior to the royalty fee due date a certified statement setting forth the reasons explaining why payment by an electronic funds transfer would be virtually impossible or, alternatively, why it would impose a financial or other hardship on the remitter. The certified statement must be signed by a duly authorized representative of the entity making the payment. A waiver shall cover only a single payment period. Failure to obtain a waiver may result in the remittance being returned to the remitter.

* * * * *

■ 3. Revise § 201.17(i) to read as follows:

§ 201.17 Statements of account covering compulsory licenses for secondary transmissions by cable systems.

* * * * *

(i) *Royalty fee payment.* (1) All royalty fees must be paid by a single electronic funds transfer, and must be received in the designated bank by the filing deadline for the relevant accounting period. The following information must be provided as part of the EFT and/or as part of the remittance advice as provided for in circulars issued by the Copyright Office:

(i) Remitter's name and address;

(ii) Name of a contact person, telephone number and extension, and e-mail address;

(iii) The actual or anticipated date that the EFT will be transmitted;

(iv) Type of royalty payment (i.e. cable);

(v) Total amount submitted via the EFT;

(vi) Total amount to be paid by year and period;

(vii) Number of Statements of Account that the EFT covers;

(viii) ID numbers assigned by the Licensing Division;

(ix) Legal name of the owner for each Statement of Account;

(x) Identification of the first community served (city and state).

(2) The remittance advice shall be attached to the Statement(s) of Account. In addition, a copy of the remittance advice shall be emailed or sent by facsimile to the Licensing Division.

(3) The Office may waive the requirement for payment by electronic funds transfer as set forth in paragraph (i)(1) of this section. To obtain a waiver, the remitter shall submit to the Licensing Division at least 60 days prior to the royalty fee due date a certified statement setting forth the reasons explaining why payment by an electronic funds transfer would be virtually impossible or, alternatively, why it would impose a financial or other hardship on the remitter. The certified statement must be signed by a duly authorized representative of the entity making the payment. A waiver shall cover only a single payment period. Failure to obtain a waiver may result in the remittance being returned to the remitter.

* * * * *

■ 4. Amend § 201.28 as follows:

■ a. By revising paragraph (e)(3)(ii);

■ b. By redesignating paragraphs (h) through (l) as paragraphs (i) through (m) respectively, and adding a new paragraph (h);

■ c. By amending newly redesignated paragraph (j)(1)(ii) to remove ''(i)(2)'' and add in its place ''(j)(2)'';

■ d. By amending newly redesignated paragraph (j)(3)(i) to remove ''(i)(3)'' and add in its place ''(j)(3)'';

■ e. By amending newly redesignated paragraph (j)(3)(vi) to remove ''(i)'' and add in its place ''(j)''.

§ 201.28 Statements of account for digital audio recording devices or media.

* * * * *

(e) * * *

(3) * * *

(ii) The amount of the royalty payment shall be calculated in accordance with the instructions specified in the quarterly Statement of Account form. Payment shall be made as specified in § 201.28(h).

* * * * *

(h) *Royalty fee payment.* (1) All royalty fees must be paid by a single electronic funds transfer, and must be received in the designated bank by the filing deadline for the relevant accounting period. The following information must be provided as part of the EFT and/or as part of the remittance advice as provided for in circulars issued by the Copyright Office:

(i) Remitter's name and address;

(ii) Name of a contact person, telephone number and extension, and email address;

(iii) The actual or anticipated date that the EFT will be transmitted;

(iv) Type of royalty payment (i.e. DART);

(v) Total amount submitted via the EFT;

(vi) Total amount to be paid by year and period;

(vii) Number of Statements of Account that the EFT covers;

(viii) ID numbers assigned by the Licensing Division;

(ix) Legal name of the owner for each Statement of Account.

(2) The remittance advice shall be attached to the Statement(s) of Account. In addition, a copy of the remittance advice shall be emailed or sent by facsimile to the Licensing Division.

(3) The Office may waive the requirement for payment by electronic funds transfer as set forth in paragraph (1) of this section. To obtain a waiver, the remitter shall submit to the Licensing Division at least 60 days prior to the royalty fee due date a certified statement setting forth the reasons explaining why payment by an electronic funds transfer would be virtually impossible or, alternatively, why it would impose a financial or other hardship on the remitter. The certified statement must be signed by a duly authorized representative of the entity making the payment. A waiver shall cover only a single payment period. Failure to obtain a waiver may result in the remittance being returned to the remitter.

* * * * *

Dated: July 19, 2006.

Marybeth Peters,

Register of Copyrights.

Approved by:

James H. Billington,

Librarian of Congress.

[FR Doc. E6–13113 Filed 8–9–06; 8:45 am]

BILLING CODE 1410–30–S

DEPARTMENT OF TRANSPORTATION

Federal Motor Carrier Safety Administration

49 CFR Part 369

Research and Innovative Technology Administration

49 CFR Part 1420

[Docket No. FMCSA–2005–21313]

RIN 2126–AA92

Motor Carrier Transportation; Redesignation of Regulations From the Research and Innovative Technology Administration

AGENCIES: Federal Motor Carrier Safety Administration (FMCSA) and Research and Innovative Technology Administration (RITA), DOT.

ACTION: Final rule; redesignation.

SUMMARY: This rule transfers and redesignates certain motor carrier reporting regulations currently found in 49 CFR Chapter XI to the Federal Motor Carrier Safety Administration (FMCSA) in 49 CFR Chapter III. On August 17, 2004, the Secretary of Transportation (Secretary) transferred responsibility for the Motor Carrier Financial and Operating Statistics Program from the Bureau of Transportation Statistics, now a part of the Research and Innovative Technology Administration, to FMCSA. Today's action transfers the applicable regulations to chapter III of title 49 CFR, establishes a new part 369 within that title, and makes conforming technical amendments to the redesignated regulations.

EFFECTIVE DATE: August 10, 2006.

FOR FURTHER INFORMATION CONTACT: Ms. Vivian Oliver, IT Operations Division,

Office of Information Technology, (202) 366–2974, Federal Motor Carrier Safety Administration, 400 Seventh Street, SW., Washington, DC 20590–0001.

SUPPLEMENTARY INFORMATION:

Legal Basis for the Rulemaking

Class I and Class II motor carriers are required by 49 U.S.C. 14123 to file annual financial reports with the Secretary. The Secretary has exercised his discretion under section 14123 to also require Class I property carriers (including dual-property carriers), Class I household goods carriers, and Class I passenger carriers to file quarterly reports. These requirements were previously delegated to the Bureau of Transportation Statistics (BTS), now a part of the Research and Innovative Technology Administration (RITA).[1] In an August 2004 final rule (69 FR 51009, Aug. 17, 2004), the Secretary transferred responsibility for the Motor Carrier Financial and Operating Statistics Program from BTS to FMCSA. This final rule implements the redesignation of the regulations concerning this program by transferring these regulations to the FMCSA portion of title 49 of the Code of Federal Regulations (CFR), adding a new part 369 to that title, and making conforming technical amendments consisting of nomenclature and address changes as well as corrections to the CFR cross-references.

Background

This final rule transfers and redesignates certain motor carrier financial and statistical reporting regulations currently found in 49 CFR Chapter XI, Part 1420 to FMCSA under 49 CFR Chapter III, and establishes a new part 369 to accommodate the redesignated regulations. In the August 17, 2004, final rule, the Secretary transferred responsibility for the Motor Carrier Financial and Operating Statistics Program from BTS, now a part of DOT's Research and Innovative Technology Administration, to FMCSA. The Secretarial delegation took effect on September 29, 2004, and today's final rule implements the redesignation of the applicable regulations.

The transfer and redesignation procedure entails moving 49 CFR Part 1420 from Chapter XI to new Part 369 of 49 CFR Chapter III. We are making no substantive changes to the regulations. However, certain technical revisions—concerning nomenclature, the agency address for submission of motor carrier reporting forms, and CFR cross-references—were necessary to reflect the redelegation of the financial and statistical reporting program responsibilities to FMCSA. In the relevant sections of redesignated part 369, we are changing the words ''Bureau of Transportation Statistics'' to ''Federal Motor Carrier Safety Administration'' and the acronym ''BTS'' to ''FMCSA''; providing an FMCSA address for submission of forms; and replacing BTS regulatory cross-references with cross-references to the corresponding FMCSA regulations.

The reporting requirement in new part 369 applies to motor carriers of property, household goods carriers, dual property carriers, and motor carriers of passengers.

Rulemaking Analyses and Notices

Because the amendments made by this document relate to departmental management, organization, procedure, and practice, prior notice and opportunity for comment are unnecessary under 5 U.S.C. 553(b)(3)(A). In addition, prior notice and opportunity for comment are unnecessary pursuant to 5 U.S.C. 553(b)(3)(B) because the process of transferring and redesignating the sections is merely technical in nature and proposes no substantive changes to which public comment could be solicited.

This final rule is made effective upon publication in the **Federal Register**. FMCSA finds that good cause exists for this final rule to be exempt from the 30-day delayed effective date requirement of 5 U.S.C. 553(d) because a delay in effective date is unnecessary and would not be in the public interest.

Executive Order 12866 (Regulatory Planning and Review) and DOT Regulatory Policies and Procedures

FMCSA has determined this action does not meet the criteria for a ''significant regulatory action'' as specified in Executive Order 12866 and within the meaning of Department of Transportation regulatory policies and procedures (44 FR 11034, Feb. 26, 1979). Therefore, this rule has not been reviewed by the Office of Management and Budget (OMB). We anticipate the economic impact of this rulemaking will be so minimal that a full regulatory evaluation under paragraph 10e of the regulatory policies and procedures of DOT is unnecessary.

Regulatory Flexibility Act

In compliance with the Regulatory Flexibility Act (5 U.S.C. 601–612), as amended by the Small Business Regulatory Enforcement and Fairness Act (Pub. L. 104–121), we have evaluated the effects of this rule on small entities. Based on this evaluation, the FMCSA Administrator hereby certifies this action will not have a significant economic impact on a substantial number of small entities. As noted above, this final rule simply provides notice to the public that the motor carrier regulations currently found in 49 CFR Chapter XI are transferred to 49 CFR Chapter III and redesignated there. No substantive changes are being made to the regulations that would affect small entities.

Executive Order 12612 (Federalism Assessment)

This action has been analyzed in accordance with the principles and criteria contained in Executive Order 12612. It has been determined this action does not have sufficient federalism implications to warrant the preparation of a federalism assessment.

Unfunded Mandates Reform Act of 1995

FMCSA has determined that the requirements of Title II of the Unfunded Mandates Reform Act of 1995 (Pub. L. 104–4; 2 U.S.C. 1532) do not apply to this rulemaking.

Executive Order 12372 (Intergovernmental Review)

The regulations implementing Executive Order 12372 regarding intergovernmental consultation on Federal programs and activities do not apply to this program.

Executive Order 13132 (Federalism Assessment)

FMCSA has analyzed this action in accordance with the principles and criteria contained in Executive Order 13132 published at 64 FR 43255 (Aug. 10, 1999). The regulations redesignated and transferred to FMCSA herein do not preempt State authority or jurisdiction, or establish any conflicts with existing State roles in the regulation and enforcement of commercial motor vehicle safety. FMCSA has therefore determined this rule does not have sufficient federalism implications to warrant the preparation of a federalism assessment.

Executive Order 12630 (Taking of Private Property)

This rule will not effect a taking of private property or otherwise have takings implications under Executive Order 12630, Governmental Actions and Interference with Constitutionally Protected Property Rights.

[1] The Research and Innovative Technology Administration was established effective February 20, 2005.

Executive Order 12988 (Civil Justice Reform)

This action meets applicable standards in sections 3(a) and 3(b)(2) of Executive Order 12988, Civil Justice Reform, to minimize litigation, eliminate ambiguity, and reduce burden.

Paperwork Reduction Act

Under the Paperwork Reduction Act of 1995 (PRA) (44 U.S.C. 3501 *et seq.*), Federal agencies must obtain approval from the Office of Management and Budget (OMB) for each collection of information they conduct, sponsor, or require through regulations. OMB approved three information collections (ICs) developed by BTS in connection with the reporting forms motor carriers must use to submit financial and statistical information. The ICs are titled ''Annual Report of Class I and Class II Motor Carriers of Property;'' ''Quarterly Report of Class I Motor Carriers of Property,'' and ''Annual and Quarterly Report of Class I Motor Carriers of Passengers,'' and involve Form M, Form QFR, and Form MP–1, respectively. The Secretarial redelegation of August 17, 2004, made FMCSA responsible for these ICs.

On June 23, 2006, OMB approved a 3-year extension of the ICs for Class I and Class II property carriers. These ICs are as follows:

OMB Control Number: 2126–0032.

Title: Annual Report of Class I and Class II Motor Carriers of Property.

Respondents: 3,000.

Estimated Annual Hour Burden for the Information Collection: 27,000.

Estimated Annual Cost to Respondents: $979,000.

Expiration Date of OMB Approval: June 30, 2009.

Form: M.

OMB Control Number: 2126–0033.

Title: Quarterly Report of Class I Motor Carriers of Property.

Respondents: 1,000.

Estimated Annual Hour Burden for the Information Collection: 1,800.

Estimated Annual Cost to Respondents: $65,000.

Expiration Date of OMB Approval: June 30, 2009.

Form: QFR.

On April 10, 2006, FMCSA published at 71 FR 18136 a notice with a 60-day comment period soliciting the public's views on the currently approved IC ''Annual and Quarterly Report of Class I Motor Carriers of Passengers.'' This IC is as follows:

OMB Control Number: 2126–0031.

Title: Annual and Quarterly Report of Class I Motor Carriers of Passengers.

Respondents: 26.

Estimated Annual Hour Burden for the Information Collection: 195.

Estimated Annual Cost to Respondents: $00 (none).

Expiration Date of OMB Approval: August 31, 2006.

Form: MP–1.

The Agency received two comments in support of continuation of the Class I passenger carrier IC. Subsequently, FMCSA published in the **Federal Register** a notice requesting public comment within 30 days on its intent to request 3-year renewal of the IC (71 FR 40175, July 14, 2006). The Agency's request for review and renewal was logged in at OMB on August 2, 2006.

National Environmental Policy Act

The agency has analyzed this rule for the purpose of the National Environmental Policy Act of 1969 (NEPA) (42 U.S.C. 4321 *et seq.*) and determined under FMCSA environmental procedures Order 5610.1, published March 1, 2004 (69 FR 9680), that this action is categorically excluded (CE) under Appendix 2, paragraph 6.b. of the Order from further environmental documentation. This CE relates to establishing regulations that are editorial or procedural in nature.

In addition, the agency believes this action includes no extraordinary circumstances that would have any effect on the quality of the environment. Thus the action does not require an environmental assessment or environmental impact statement. The **Federal Register** notice transmitting FMCSA's environmental procedures Order can be accessed online through the Government Printing Office (*http://www.gpoaccess.gov*), and a copy of the Order is also available as document 6 in Docket number 14095, at *http://dms.dot.gov/search/searchFormSimple.cfm.*

We have also analyzed this action under section 176(c) of the Clean Air Act (CAA), as amended (42 U.S.C. 7401 *et seq.*), and implementing regulations promulgated by the Environmental Protection Agency. Approval of this action is exempt from the CAA's general conformity requirement since it involves an administrative action or organizational changes via the rulemaking process. See 49 CFR 93.153(c)(2). This action will not result in any emissions increase, nor does it have any potential to result in emissions that are above the general conformity rule's *de minimis* emission threshold levels. Moreover, it is reasonably foreseeable that the rule will not increase total commercial motor vehicle mileage, change the routing of commercial motor vehicles, change how commercial motor vehicles operate, or change the commercial motor vehicle fleet-mix of motor carriers.

Executive Order 13045 (Protection of Children)

FMCSA has analyzed this action under Executive Order 13045, Protection of Children from Environmental Health Risks and Safety Risks. This rule is not economically significant and does not create an environmental risk to health or safety that would disproportionately affect children. Therefore, we have determined the rule is not a ''covered regulatory action'' as defined under Executive Order 13045.

Executive Order 13211 (Energy Supply, Distribution, or Use)

FMCSA has analyzed this action under Executive Order 13211, Actions Concerning Regulations That Significantly Affect Energy Supply, Distribution, or Use. This action is not a significant energy action within the meaning of section 4(b) of the Executive Order because as a procedural action it is not economically significant and would not have a significant adverse effect on the supply, distribution, or use of energy.

List of Subjects

49 CFR Part 1420

Motor carriers, Reporting and recordkeeping requirements.

49 CFR Part 369

Motor carriers, Reporting and recordkeeping requirements.

■ In consideration of the foregoing and under the authority of 49 U.S.C. 104 and 721(a), FMCSA and RITA hereby amend 49 CFR chapters III and XI as set forth below:

PART 1420—[REDESIGNATED AS PART 369]

■ 1. Part 1420 in 49 CFR Chapter XI is transferred to 49 CFR Chapter III and redesignated as new part 369. The redesignated regulations are set forth in the following table:

REDESIGNATION TABLE

Old section	New section
1420 Part heading	369 Part heading
1420.1	369.1
1420.2	369.2
1420.3	369.3
1420.4	369.4
1420.5	369.5
1420.6	369.6

REDESIGNATION TABLE—Continued

Old section	New section
1420 Part heading	369 Part heading
1420.7 [Reserved]	369.7 [Reserved]
1420.8	369.8
1420.9	369.9
1420.10	369.10
1420.11	369.11

■ 2. The authority citation for redesignated part 369 is added to read as follows:

Authority: 5 U.S.C. 553 and 559; 16 U.S.C. 1456; 49 U.S.C. 14123; 49 CFR 1.73.

PART 369—[AMENDED]

■ 3. In redesignated part 369, revise all references to ''Bureau of Transportation Statistics'' to read ''Federal Motor Carrier Safety Administration''.

■ 4. Further amend redesignated part 369 by revising all references to ''BTS'' to read ''FMCSA''.

■ 5. Further amend redesignated part 369 by revising all references to ''§ 1420.1'' to read ''§ 369.1'' and by revising all references to ''§ 1420.6'' to read ''§ 369.6''.

§ 369.1 [Amended]

■ 6. Amend redesignated § 369.1 by removing the words ''§ 1420.2'' in paragraph (a) and adding, in their place, the words ''§ 369.2''.

§ 369.5 [Amended]

■ 7. Amend redesignated § 369.5 by removing the words ''part 1220'' and adding, in their place, the words ''Part 379''.

§ 369.6 [Amended]

■ 8. Amend redesignated § 369.6 by removing the words ''Bureau of Transportation Statistics, U.S. Department of Transportation, K–13'' and adding, in their place, the words ''Federal Motor Carrier Safety Administration, Office of Information Management.''

§ 369.8 [Amended]

■ 9. Amend redesignated § 369.8 by revising as follows:

■ a. In paragraph (c), remove the words ''§ 1420.9(c)'' and add, in their place, the words ''§ 369.9(c)''.

■ b. In paragraph (d), remove the words ''§ 1420.9(d)'' and add, in their place, the words ''§ 369.9(d)''.

§ 369.10 [Amended]

■ 10. Amend redesignated § 369.10 by removing the words ''§ 1420.9'' in paragraphs (b)(1) and (2) and adding, in their place, the words ''§ 369.9''.

§ 369.11 [Amended]

■ 11. Amend redesignated § 369.11 by revising as follows:

■ a. Remove the words ''§ 1420.3(a)'' and add, in their place, the words ''§ 369.3(a)''.

■ b. Remove the words ''Office of the Bureau of Transportation Statistics'' and add, in their place, the words ''FMCSA Office of Information Management''.

Issued on: August 3, 2006.

David H. Hugel,

Acting Administrator, Federal Motor Carrier Safety Administration.

Ashok G. Kaveeshwar,

Administrator, Research and Innovative Technology Administration.

[FR Doc. E6–12962 Filed 8–9–06; 8:45 am]

BILLING CODE 4910–EX–P

Proposed Rules

Federal Register

Vol. 71, No. 154

Thursday, August 10, 2006

This section of the FEDERAL REGISTER contains notices to the public of the proposed issuance of rules and regulations. The purpose of these notices is to give interested persons an opportunity to participate in the rule making prior to the adoption of the final rules.

DEPARTMENT OF AGRICULTURE

Commodity Credit Corporation

7 CFR Part 1421

RIN 0560–AH52

Storage Requirements for Grain Security for Marketing Assistance Loans

AGENCY: Commodity Credit Corporation, USDA.

ACTION: Proposed rule; reopening and extension of comment period.

SUMMARY: The Commodity Credit Corporation (CCC) is reopening and extending the comment period for the subject proposed rule. The original comment period for the proposed rule closed August 2, 2006, and CCC is reopening and extending it for 60 days from the date of this notice. CCC also will consider any comments received from August 2, 2006, to the date of this notice. This action responds to requests from the public to provide more time to comment on the proposed rule.

DATES: Comments should be received on or before October 10, 2006.

ADDRESSES: CCC invites interested persons to submit comments on this proposed rule and on the collection of information required to administer the affected regulations. Comments may be submitted by any of the following methods:

- *E-mail:* Send comments to: *kimberly.graham@wdc.usda.gov.*
- *Fax:* Submit comments by facsimile transmission to: (202) 690–1536.
- *Mail:* Send comments to: Director, Price Support Division, Farm Service Agency, United States Department of Agriculture (USDA), Room 4095–S, 1400 Independence Avenue, SW., Washington, DC 20250–0512.
- *Hand Delivery or Courier:* Deliver comments to the above address.
- *Federal Rulemaking Portal:* Go to *http://www.regulations.gov*. Follow the online instructions for submitting comments.

All written comments will be available for public inspection at the above address during business hours from 8 a.m. to 5 p.m., Monday through Friday.

FOR FURTHER INFORMATION CONTACT: Kimberly Graham; phone: (202) 720–9154; e-mail: *kimberly.graham@wdc.usda.gov*, or fax: (202) 690–1536.

SUPPLEMENTARY INFORMATION:

Background

On July 3, 2006, CCC published a proposed rule, ''Storage Requirements for Grain Security for Marketing Assistance Loans'' in the **Federal Register** (71 FR 37857–37862). The rule proposed changes to the regulations governing the CCC Marketing Assistance Loan Programs authorized by the Farm Security and Rural Investment Act of 2002 (2002 Act). CCC proposed in the rule to no longer require a Federally-licensed warehouse operator or a State-licensed warehouse operator in a State with a warehouse licensing program to execute a CCC storage agreement.

The Agency believes the request for additional time to comment on the proposed rule is reasonable and will allow the rulemaking to proceed in a timely manner. As a result of the reopening and extension, the comment period for the proposed rule will close on October 10, 2006.

Signed in Washington, DC, on August 4, 2006.

Glen L. Keppy,

Executive Vice President, Commodity Credit Corporation.

[FR Doc. E6–13002 Filed 8–9–06; 8:45 am]

BILLING CODE 3410–05–P

DEPARTMENT OF TRANSPORTATION

Federal Aviation Administration

14 CFR Part 39

[Docket No. FAA–2006–25171; Directorate Identifier 2006–CE–35–AD]

RIN 2120–AA64

Airworthiness Directives; Schempp–Hirth GmbH & Co. KG Models; Mini-Nimbus B and Mini-Nimbus HS–7 Sailplanes

AGENCY: Federal Aviation Administration (FAA), Department of Transportation (DOT).

ACTION: Notice of proposed rulemaking (NPRM).

SUMMARY: We propose to adopt a new airworthiness directive (AD) for the products listed above. This proposed AD results from mandatory continuing airworthiness information (MCAI) issued by an airworthiness authority of another country to identify and correct an unsafe condition on an aviation product. The proposed AD would require actions that are intended to address an unsafe condition described in the MCAI.

DATES: We must receive comments on this proposed AD by September 11, 2006.

ADDRESSES: Use one of the following addresses to comment on this proposed AD:

- *DOT Docket Web site:* Go to *http://dms.dot.gov* and follow the instructions for sending your comments electronically.
- *Government-wide rulemaking Web site:* Go to *http://www.regulations.gov* and follow the instructions for sending your comments electronically.
- *Mail:* Docket Management Facility; U.S. Department of Transportation, 400 Seventh Street, SW., Nassif Building, Room PL–401, Washington, DC 20590.
- *Fax:* (202) 493–2251.
- *Hand delivery:* Room PL–401 on the plaza level of the Nassif Building, 400 Seventh Street, SW., Washington, DC, between 9 a.m. and 5 p.m., Monday through Friday, except Federal holidays.

For service information identified in the proposed AD, contact Schempp-Hirth, Flugzeugbau GmbH, Postfach 14 43, D–73222 Kirchheim/Teck, Germany; telephone: ++ 49 7021 7298–0; fax: ++ 49 7021 7298–199; Web site: *www.schempp-hirth.com,* e-mail: *info@schempp-hirth.com.*

FOR FURTHER INFORMATION CONTACT: Gregory Davison, Aerospace Engineer, FAA, Small Airplane Directorate, 901 Locust, Room 301, Kansas City, Missouri 64106; telephone: (816) 329–4130; facsimile: (816) 329–4090.

SUPPLEMENTARY INFORMATION:

Streamlined Issuance of AD

The FAA is implementing a new process for streamlining the issuance of ADs related to MCAI. We are prototyping this process and specifically request your comments on its use. You can find more information in FAA draft

Order 8040.2, ''Airworthiness Directive Process for Mandatory Continuing Airworthiness Information'' which is currently open for comments at *http://www.faa.gov/aircraft/draft_docs*. This streamlined process will allow us to adopt MCAI safety requirements in a more efficient manner and will reduce safety risks to the public.

This process continues to follow all existing AD issuance processes to meet legal, economic, Administrative Procedure Act, and **Federal Register** requirements. We also continue to follow our technical decision-making processes in all aspects to meet our responsibilities to determine and correct unsafe conditions on U.S.-certificated products.

This proposed AD references the MCAI and related service information that we considered in forming the engineering basis to correct the unsafe condition. The proposed AD contains text copied from the MCAI and for this reason might not follow our plain language principles.

The comment period for this proposed AD is open for 30 days to allow time for comment on both the process and the AD content. In the future, ADs using this process will have a 15-day comment period. The comment period is reduced because the airworthiness authority and manufacturer have already published the documents on which we based our decision, making a longer comment period unnecessary.

Comments Invited

We invite you to send any written data, views, or arguments regarding this proposed AD. Send your comments to an address listed under the **ADDRESSES** section. Include the docket number, ''FAA–2006–25171; Directorate Identifier 2006–CE–35–AD'' at the beginning of your comments. We specifically invite comments on the overall regulatory, economic, environmental, and energy aspects of the proposed AD. We are also inviting comments, views, or arguments on the new MCAI process. We will consider all comments received by the closing date and may amend the proposed AD in light of those comments.

We will post all comments we receive, without change, to *http://dms.dot.gov,* including any personal information you provide. We will also post a report summarizing each substantive verbal contact we receive concerning this proposed AD.

Discussion

The Luftfahrt-Bundesamt, which is the airworthiness authority for Germany, has issued AD D–2005–239, Effective Date: July 22, 2005 (referred to after this as ''the MCAI''), to correct an unsafe condition for the specified products. The MCAI states that the aircraft manufacturer has identified, during the daily check after assembling a Mini Nimbus C, a failure in the flap actuating circuit. An investigation showed that the lever at the torsional drive in the fuselage failed at the weld. If not corrected, this condition could lead to a failure in the flap actuating circuit, which could result in reduced controllability of the sailplane. The MCAI requires reinforcing the flap drive. You may obtain further information by examining the MCAI in the docket.

Relevant Service Information

Schempp-Hirth Flugzeugbau GmbH. has issued Technical Note No. 286–35/No. 328–13, EASA approved on: July 1, 2005. The actions described in this service information are intended to correct the unsafe condition identified in the MCAI.

FAA's Determination and Requirements of the Proposed AD

This product is manufactured outside the United States and is type certificated for operation in the United States under the provisions of section 21.29 of the Federal Aviation Regulations (14 CFR 21.29) and the applicable bilateral agreement. Pursuant to this bilateral airworthiness agreement, the State of Design's airworthiness authority has notified us of the unsafe condition described in the MCAI and service information referenced above. We have examined the airworthiness authority's findings, evaluated all pertinent information, and determined an unsafe condition exists and is likely to exist or develop on all products of this type design. We are issuing this proposed AD to correct the unsafe condition.

Differences Between the Proposed AD and the MCAI or Service Information

We have reviewed the MCAI and related service information and, in general, agree with their substance. But we might have found it necessary to use different words from those in the MCAI to ensure the AD is clear for U.S. operators and is enforceable in a U.S. court of law. In making these changes, we do not intend to differ substantively from the information provided in the MCAI and related service information.

We might also have proposed different actions in this AD from those in the MCAI in order to follow FAA policies. Any such differences are described in a separate paragraph of the proposed AD. These proposed requirements, if ultimately adopted, will take precedence over the actions copied from the MCAI.

Costs of Compliance

Based on the service information, we estimate that this proposed AD would affect about 13 products of U.S. registry. We also estimate that it would take about 6 work-hours per product to do the action and that the average labor rate is $80 per work-hour. Required parts would cost about $13 per product. Where the service information lists required parts costs that are covered under warranty, we have assumed that there will be no charge for these costs. As we do not control warranty coverage for affected parties, some parties may incur costs higher than estimated here. Based on these figures, we estimate the cost of the proposed AD on U.S. operators to be $6,409, or $493 per product.

Authority for This Rulemaking

Title 49 of the United States Code specifies FAA's authority to issue rules on aviation safety. Subtitle I, section 106, describes the authority of the FAA Administrator. Subtitle VII, Aviation Programs, describes in more detail the scope of the Agency's authority.

We are issuing this rulemaking under the authority described in subtitle VII, part A, subpart III, section 44701, ''General requirements.'' Under that section, Congress charges FAA with promoting safe flight of civil aircraft in air commerce by prescribing regulations for practices, methods, and procedures the Administrator finds necessary for safety in air commerce. This regulation is within the scope of that authority because it addresses an unsafe condition that is likely to exist or develop on products identified in this rulemaking action.

Regulatory Findings

We have determined that this proposed AD would not have federalism implications under Executive Order 13132. This proposed AD would not have a substantial direct effect on the States, on the relationship between the national Government and the States, or on the distribution of power and responsibilities among the various levels of government.

For the reasons discussed above, I certify that the proposed regulation:

1. Is not a ''significant regulatory action'' under Executive Order 12866;

2. Is not a ''significant rule'' under the DOT Regulatory Policies and Procedures (44 FR 11034, February 26, 1979); and

3. Will not have a significant economic impact, positive or negative, on a substantial number of small entities under the criteria of the Regulatory Flexibility Act.

We prepared a regulatory evaluation of the estimated costs to comply with this proposed AD and placed it in the AD docket.

Examining the AD Docket

You may examine the AD docket that contains the proposed AD, the regulatory evaluation, any comments received, and other information on the Internet at *http://dms.dot.gov;* or in person at the Docket Management Facility between 9 a.m. and 5 p.m., Monday through Friday, except Federal holidays. The Docket Office (telephone (800) 647–5227) is located at the street address stated in the **ADDRESSES** section. Comments will be available in the AD docket shortly after receipt.

List of Subjects in 14 CFR Part 39

Air transportation, Aircraft, Aviation safety, Safety.

The Proposed Amendment

Accordingly, under the authority delegated to me by the Administrator, the Federal Aviation Administration proposes to amend 14 CFR part 39 as follows:

PART 39—AIRWORTHINESS DIRECTIVES

1. The authority citation for part 39 continues to read as follows:

Authority: 49 U.S.C. 106(g), 40113, 44701.

§ 39.13 [Amended]

2. The FAA amends § 39.13 by adding the following new AD:

Schempp-Hirth GmbH & Co. KG Models: FAA–2006–25171; Directorate Identifier 2006–CE–35–AD.

Comments Due Date

(a) We must receive comments on this proposed airworthiness directive (AD) by September 11, 2006.

Affected ADs

(b) None.

Applicability

(c) This AD applies to Models Mini-Nimbus B and Mini-Nimbus HS–7 sailplanes, all serial numbers, that are certificated in any U.S. category.

Reason

(d) The mandatory continuing airworthiness information (MCAI) states that the aircraft manufacturer has identified, during the daily check after assembling a Mini Nimbus C, a failure in the flap actuating circuit. An investigation showed that the lever at the torsional drive in the fuselage failed at the weld. If not corrected, this condition could lead to a failure in the flap actuating circuit, which could result in reduced controllability of the sailplane. The MCAI requires reinforcing the flap drive.

Actions and Compliance

(e) Unless already done, do the following except as stated in paragraph (f) below.

(1) Within the next 90 days after the effective date of this AD, reinforce the flap drive.

(2) Do the reinforcement following Schempp-Hirth Flugzeugbau GmbH. Technical Note No. 286–35/No. 328–13, EASA approved on: July 1, 2005.

FAA AD Differences

(f) None.

Other FAA AD Provisions

(g) The following provisions also apply to this AD:

(1) *Alternative Methods of Compliance (AMOCs):* The Manager, Standards Staff, FAA, ATTN: Gregory Davison, Aerospace Engineer, FAA, Small Airplane Directorate, 901 Locust, Room 301, Kansas City, Missouri 64106; telephone: (816) 329–4130; fax: (816) 329–4090, has the authority to approve AMOCs for this AD, if requested using the procedures found in 14 CFR 39.19.

(2) *Return to Airworthiness:* When complying with this AD, perform FAA-approved corrective actions before returning the product to an airworthy condition.

(3) *Reporting Requirements:* For any reporting requirement in this AD, under the provisions of the Paperwork Reduction Act, the Office of Management and Budget (OMB) has approved the information collection requirements and has assigned OMB Control Number 2120–0056.

Related Information

(h) This AD is related to German AD D–2005–239, Effective Date: July 22, 2005, which references Schempp-Hirth Flugzeugbau GmbH. Technical Note No. 286–35/No. 328–13, EASA approved on: July 1, 2005.

Issued in Kansas City, Missouri, on August 4, 2006.

John R. Colomy,

Acting Manager, Small Airplane Directorate, Aircraft Certification Service.

[FR Doc. E6–13017 Filed 8–9–06; 8:45 am]

BILLING CODE 4910–13–P

DEPARTMENT OF HOMELAND SECURITY

Coast Guard

33 CFR Part 110

[CGD01–06–084]

RIN 1625–AA01

Anchorage Regulations; Camden, ME, Penobscot Bay

AGENCY: Coast Guard, DHS.

ACTION: Notice of proposed rulemaking.

SUMMARY: The Coast Guard proposes to establish two special anchorage areas in Camden Harbor, Camden, Maine. This proposed action is necessary to facilitate safe navigation in that area and provide safe and secure anchorages for vessels not more than 65 feet in length. This action is intended to increase the safety of life and property in Camden Harbor, improve the safety of anchored vessels, and provide for the overall safe and efficient flow of vessel traffic and commerce.

DATES: Comments and related material must reach the Coast Guard on or before October 10, 2006.

ADDRESSES: You may mail comments and related material to Commander (dpw) (CGD01–06–084), First Coast Guard District, 408 Atlantic Ave., Boston, MA 02110, or deliver them to room 628 at the same address between 8 a.m. and 3 p.m., Monday through Friday, except Federal holidays. Comments and material received from the public, as well as documents indicated in this preamble as being available in the docket, will become part of this docket and will be available for inspection or copying at room 628, First Coast Guard District Boston, between 8 a.m. and 3 p.m., Monday through Friday, except Federal holidays.

FOR FURTHER INFORMATION CONTACT: Mr. John J. Mauro, Commander (dpw), First Coast Guard District, 408 Atlantic Ave., Boston, MA 02110, Telephone (617) 223–8355 or e-mail at *John.J.Mauro@uscg.mil.*

SUPPLEMENTARY INFORMATION:

Request for Comments

We encourage you to participate in this rulemaking by submitting comments and related material. If you do so, please include your name and address, identify the docket number for this rulemaking (CGD01–06–084), indicate the specific section of this document to which each comment applies, and give the reason for each comment. Please submit all comments and related material in an unbound format, no larger than 8½ by 11 inches, suitable for copying. If you would like to know they reached us, please enclose a stamped, self-addressed postcard or envelope. We will consider all comments and material received during the comment period. We may change this proposed rule in view of them.

Public Meeting

We do not now plan to hold a public meeting. But you may submit a request for a meeting by writing to the

Waterways Management Branch at the address under **ADDRESSES** explaining why one would be beneficial. If we determine that one would aid this rulemaking, we will hold one at a time and place announced by a later notice in the **Federal Register**.

Background and Purpose

The rule is intended to reduce the risk of vessel collisions by creating two special anchorage areas in Camden Harbor. The proposed rule would establish a special anchorage area to the west of Northeast Point and a second special anchorage area to the northwest of Curtis Island, creating anchorage for approximately 400 additional vessels.

The Coast Guard is designating the special anchorage areas in accordance with 33 U.S.C. 471. When at anchor in any special anchorage, vessels not more than 65 feet in length need not carry or exhibit the white anchor lights otherwise required by rule 30 and 35 of the Inland Navigation Rules, codified at 33 U.S.C. 2030 and 2035.

In developing this proposed rule, the Coast Guard has consulted with the Army Corps of Engineers, Northeast, located at 696 Virginia Rd., Concord, MA 01742.

Discussion of Proposed Rule

The proposed rule would create two new special anchorage areas, separated by a 150-foot wide fairway channel, in Camden, Maine, on Penobscot Bay. These two new special anchorage areas in Camden Harbor, Sherman Cove and adjacent waters are described below. All proposed coordinates are North American Datum 1983 (NAD 83).

Anchorage A

All of the waters enclosed by a line beginning at Eaton Point at latitude 44°12′31″ N., longitude 069°03′34″ W.; thence to latitude 44°12′28″ N., longitude 069°03′33″ W.; thence to latitude 44°12′32″ N., longitude 069°02′49″ W.; thence along the shoreline to the point of beginning. This area is approximately 900 by 750 meters. It encompasses the northern portion of Camden Harbor, from Northeast Point to Eaton Point, and Sherman Cove.

Anchorage B

All of the waters enclosed by a line beginning at Dillingham Point at latitude 44°12′12″ N., longitude 069°03′20″ W.; thence to latitude 44°12′14″ N., longitude 069°02′58″ W.; thence to latitude 44°12′19″ N., longitude 069°03′08″ W.; thence to latitude 44°12′28″ N., longitude 069°03′13″ W.; thence to latitude 44°12′26″ N., longitude 069°03′39″ W.; thence along the shoreline to the point of beginning. This area is approximately 500 by 400 meters, encompassing the Southern portion of Camden Harbor, west of position 44°12′20″ N., 069°03′07″ W.; (Camden Harbor Buoy ''7'' LLNR 4330).

Vessels not more than 65 feet in length are not required to sound signals as required by rule 35 of the Inland Navigation Rules (33 U.S.C. 2035) nor exhibit anchor lights or shapes required by rule 30 of the Inland Navigation Rules (33 U.S.C 2030) when at anchor in a special anchorage area. Additionally, mariners utilizing the anchorage areas are encouraged to contact local and state authorities, such as the local harbormaster, to ensure compliance with any additional applicable state and local laws. Such laws may involve, for example, compliance with direction from the local harbormaster when placing or using moorings within the anchorage.

Regulatory Evaluation

This proposed rule is not a ''significant regulatory action'' under section 3(f) of Executive Order 12866, Regulatory Planning and Review, and does not require an assessment of potential costs and benefits under section 6(a)(3) of that Order. The Office of Management and Budget has not reviewed it under that Order.

We expect the economic impact of this proposed rule to be so minimal that a full Regulatory Evaluation is unnecessary.

This finding is based on the fact that this proposal makes the best use of the available navigable water, while not affecting vessel transits in the area. Specifically, the proposed special anchorage areas do not impede the passage of recreational, fishing or commercial vessels as there is approximately 150 feet of safe water between them.

Small Entities

Under the Regulatory Flexibility Act (5 U.S.C. 601–612), we have considered whether this proposed rule would have a significant economic impact on a substantial number of small entities. The term ''small entities'' comprises small businesses, not-for-profit organizations that are independently owned and operated and are not dominant in their fields, and governmental jurisdictions with populations of less than 50,000.

The Coast Guard certifies under 5 U.S.C. 605(b) that this proposed rule would not have a significant economic impact on a substantial number of small entities.

This proposed rule would affect the following entities, some of which might be small entities: The owners or operators of recreational or commercial vessels intending to transit in a portion of the Camden Harbor in and around the special anchorage areas. The proposed special anchorage areas, however, would not have a significant economic impact on these entities for the following reasons. The proposed special anchorage areas do not impede the passage of recreational or commercial vessels intending to transit between them, as there is approximately 150 feet of safe water separating them. This is sufficient room for transiting, lobstering, recreational boating and other activities common to the area.

If you think that your business, organization, or governmental jurisdiction qualifies as a small entity and that this rule would have a significant economic impact on it, please submit a comment (see **ADDRESSES**) explaining why you think it qualifies and how and to what degree this rule would economically affect it.

Assistance for Small Entities

Under section 213(a) of the Small Business Regulatory Enforcement Fairness Act of 1996 (Pub. L. 104–121), we want to assist small entities in understanding this proposed rule so that they can better evaluate its effects on them and participate in the rulemaking. If the rule would affect your small business, organization, or governmental jurisdiction and you have questions concerning its provisions or options for compliance, please contact John J. Mauro, Waterways Management Branch, First Coast Guard District Boston at (617) 223–8355 or e-mail at *John.J.Mauro@uscg.mil*. The Coast Guard will not retaliate against small entities that question or complain about this rule or any policy or action of the Coast Guard.

Collection of Information

This proposed rule would call for no new collection of information under the Paperwork Reduction Act of 1995 (44 U.S.C. 3501–3520).

Federalism

A rule has implications for federalism under Executive Order 13132, Federalism, if it has a substantial direct effect on State or local governments and would either preempt State law or impose a substantial direct cost of compliance on them. We have analyzed this proposed rule under that Order and

have determined that it does not have implications for federalism.

Unfunded Mandates Reform Act

The Unfunded Mandates Reform Act of 1995 (2 U.S.C. 1531–1538) requires Federal agencies to assess the effects of their discretionary regulatory actions. In particular, the Act addresses actions that may result in the expenditure by a State, local, or tribal government, in the aggregate, or by the private sector of $100,000,000 or more in any one year. Though this proposed rule would not result in such an expenditure, we do discuss the effects of this rule elsewhere in this preamble.

Taking of Private Property

This proposed rule would not affect a taking of private property or otherwise have taking implications under Executive Order 12630, Governmental Actions and Interference with Constitutionally Protected Property Rights.

Civil Justice Reform

This proposed rule meets applicable standards in sections 3(a) and 3(b)(2) of Executive Order 12988, Civil Justice Reform, to minimize litigation, eliminate ambiguity, and reduce burden.

Protection of Children

We have analyzed this proposed rule under Executive Order 13045, Protection of Children from Environmental Health Risks and Safety Risks. This rule is not an economically significant rule and would not create an environmental risk to health or risk to safety that might disproportionately affect children.

Indian Tribal Governments

This proposed rule does not have tribal implications under Executive Order 13175, Consultation and Coordination with Indian Tribal Governments, because it would not have a substantial direct effect on one or more Indian tribes, on the relationship between the Federal Government and Indian tribes, or on the distribution of power and responsibilities between the Federal Government and Indian tribes.

Energy Effects

We have analyzed this proposed rule under Executive Order 13211, Actions Concerning Regulations That Significantly Affect Energy Supply, Distribution, or Use. We have determined that it is not a ''significant energy action'' under that order because it is not a ''significant regulatory action'' under Executive Order 12866 and is not likely to have a significant adverse effect on the supply, distribution, or use of energy. The Administrator of the Office of Information and Regulatory Affairs has not designated it as a significant energy action. Therefore, it does not require a Statement of Energy Effects under Executive Order 13211.

Technical Standards

The National Technology Transfer and Advancement Act (NTTAA) (15 U.S.C. 272 note) directs agencies to use voluntary consensus standards in their regulatory activities unless the agency provides Congress, through the Office of Management and Budget, with an explanation of why using these standards would be inconsistent with applicable law or otherwise impractical. Voluntary consensus standards are technical standards (*e.g.,* specifications of materials, performance, design, or operation; test methods; sampling procedures; and related management systems practices) that are developed or adopted by voluntary consensus standards bodies.

This proposed rule does not use technical standards. Therefore, we did not consider the use of voluntary consensus standards.

Environment

We have analyzed this proposed rule under Commandant Instruction M16475.lD, and Department of Homeland Security Management Directive 5100.1, which guides the Coast Guard in complying with the National Environmental Policy Act of 1969 (NEPA) (42 U.S.C. 4321–4370f), and have made a preliminary determination that there are no factors in this case that would limit the use of a categorical exclusion under section 2.B.2 of the Instruction. Therefore, we believe that this rule should be categorically excluded, under figure 2–1, paragraph (34)(f), of the Instruction, from further environmental documentation. This rule fits the category selected from paragraph (34)(f) as it would establish a special anchorage area.

A preliminary ''Environmental Analysis Check List'' is available in the docket where indicated under **ADDRESSES**. Comments on this section will be considered before we make the final decision on whether the rule should be categorically excluded from further environmental review.

List of Subjects in 33 CFR Part 110

Anchorage grounds.

For the reasons discussed in the preamble, the Coast Guard proposes to amend 33 CFR part 110 as follows:

PART 110—ANCHORAGE REGULATIONS

1. The authority citation for part 110 continues to read as follows:

Authority: 33 U.S.C. 471; 1221 through 1236, 2030, 2035 and 2071; 33 CFR 1.05–1(g); and Department of Homeland Security Delegation No. 0170.1.

2. Amend § 110.4 by revising paragraph (b) to read as follows:

§ 110.4 Penobscot Bay, Maine.

* * * * *

(b) *Camden Harbor, Sherman Cove and adjacent waters*—(1) *Anchorage A.* All of the waters enclosed by a line beginning at Eaton Point at latitude 44°12′31″ N., longitude 069°03′34″ W.; thence to latitude 44°12′28″ N., longitude 069°03′33″ W.; thence to latitude 44°12′32″ N., longitude 069°02′49″ W.; thence along the shoreline to the point of beginning. Datum: NAD83.

(2) *Anchorage B.* All of the waters enclosed by a line beginning at Dillingham Point at latitude 44°12′12″ N., longitude 069°03′20″ W.; thence to latitude 44°12′14″ N., longitude 069°02′58″ W.; thence to latitude 44°12′19″ N., longitude 069°03′08″ W.; thence to latitude 44°12′28″ N., longitude 069°03′13″ W.; thence to latitude 44°12′26″ N., longitude 069°03′39″ W.; thence along the shoreline to the point of beginning. Datum: NAD83.

Note to paragraph (b): Anchorages A and B are special anchorage areas reserved for yachts and other recreational craft. Fore and aft moorings will be allowed in this area. Temporary floats or buoys for marking anchors or moorings in place will be allowed. Fixed mooring piles or stakes are prohibited. All moorings must be so placed that no vessel when anchored is at any time extended into the thoroughfare. This is to ensure that a distance of approximately 150 feet is left between Anchorages A and B for vessels entering or departing from Camden Harbor. All anchoring in the area is under the supervision of the local harbor master or such other authority as may be designated by the authorities of the Town of Camden, Maine.

Dated: July 31, 2006.

Timothy S. Sullivan,

Rear Admiral, U.S. Coast Guard, Commander, First Coast Guard District.

[FR Doc. E6–13103 Filed 8–9–06; 8:45 am]

BILLING CODE 4910–15–P

LIBRARY OF CONGRESS

Copyright Office

37 CFR Part 201

[Docket No. RM–2005–6]

Cable Compulsory License Reporting Practices

AGENCY: Copyright Office, Library of Congress.

ACTION: Notice of inquiry.

SUMMARY: The Copyright Office is seeking input on possible rules governing the reporting practices of cable operators under the Copyright Act.

DATES: Written comments are due September 25, 2006. Reply comments are due October 24, 2006. August 10, 2006.

ADDRESSES: If hand delivered by a private party, an original and five copies of a comment or reply comment should be brought to Library of Congress, U.S. Copyright Office, 2221 S. Clark Street, 11th Floor, Arlington, Va. 22202, between 8:30 a.m. and 5 p.m. and the envelope should be addressed as follows: Office of the General Counsel, U.S. Copyright Office.

If delivered by a local commercial courier, an original and five copies of a comment or reply comment must be delivered to the Congressional Courier Acceptance Site located at 2nd and D Streets, NE, between 8:30 a.m. and 4 p.m. The envelope should be addressed as follows: Office of the General Counsel, U.S. Copyright Office, LM 430, James Madison Building, 101 Independence Avenue, SE, Washington, DC. Please note that CCAS will not accept delivery by means of overnight delivery services such as Federal Express, United Parcel Service and DHL.

If sent by mail (including overnight delivery using U.S. Postal Service Express Mail), an original and five copies of a comment or reply comment should be addressed to U.S. Copyright Office, Copyright GC/I&R, P.O. Box 70400, Southwest Station, Washington, DC 20024.

FOR FURTHER INFORMATION CONTACT: Ben Golant, Senior Attorney, and Tanya M. Sandros, Associate General Counsel, Copyright GC/I&R, P.O. Box 70400, Southwest Station, Washington, DC 20024. Telephone: (202) 707–8380. Telefax: (202) 707–8366.

SUPPLEMENTARY INFORMATION: Cable systems that retransmit broadcast signals in accordance with the provision governing the statutory license set forth in Section 111 of the Copyright Act, title 17 of the United States Code (''Section 111''), are required to deposit royalty fees with the Copyright Office. Payments made under the cable statutory license are remitted semiannually to the Copyright Office. The Copyright Office invests the royalties in United States Treasury securities pending distribution of these funds to those copyright owners who are entitled to receive a share of the fees.

I. Introduction

The Motion Picture Association of America, Inc. (''MPAA''), on behalf of its member companies and other producers and/or distributors of movies, series and specials (''Program Suppliers''), has petitioned the Copyright Office to commence a rulemaking proceeding addressing several issues related to the reporting practices of cable operators under Section 111. First, Program Suppliers request that the Copyright Office require additional information to be reported on the cable operators' Statement of Accounts (''SOAs''), particularly information relating to gross receipts, service tiers, subscribers, headend locations, and cable communities. Second, Program Suppliers request regulatory clarification regarding the effect of cable operators' interest payments that accompany late–filed SOAs or amended SOAs, specifically, that payment of such interest does not impair the ability of copyright owners to bring infringement actions against cable operators that fail to pay the full amount of the royalties they owe on a timely basis. Finally, Program Suppliers request that the Copyright Office clarify the definition of the term cable ''community'' in its regulations to comport with the meaning of ''cable system'' as defined in Section 111.

The regulatory actions requested by Program Suppliers are properly within the authority of the Copyright Office. 17 U.S.C. 111(d) and 702. However, we find it necessary to establish a full record on the need for the changes suggested by Program Suppliers before deciding whether to propose rules. We therefore initiate this Notice of Inquiry to address the various issues raised by Program Suppliers in their Petition for Rulemaking.

II. Changes to Information Reported on Cable SOAs

1. *Verifying Gross Receipts Using Subscriber and Rate Information*

Section 111 requires cable operators to report both the ''total number of subscribers'' to their system and the ''the gross amounts paid to the cable system for the basic service of providing secondary transmissions of primary broadcast transmitters . . . .'' 17 U.S.C. 111(d)(1)(A). Consistent with Section 111, the Copyright Office's regulations require cable operators to report ''the gross amount paid to the cable system by subscribers for the basic service of providing secondary transmissions of primary broadcast transmissions . . . .'' 37 CFR 201.17(e)(7). This regulation is implemented by Space E (titled ''Secondary Transmission Service: Subscribers and Rates'') and Space K (titled ''Gross Receipts'') of the SOAs. According to the instructions for Space E, the information provided therein ''should cover all categories of 'secondary transmission service' of the cable system'' including the number of subscribers and the rate applicable to each category of subscribers. Forms SA1–2 (''Short Form'') and SA3 (''Long Form''), p. 2, Space E. Instructions for completing Space K require cable operators to ''[e]nter the total of all amounts ('gross receipts') paid to [their] cable system by subscribers for the system's 'secondary transmission service' (as identified in space E)[.]'' Forms SA1–2 and SA3, p. 7, Space K. The total amount obtained by multiplying the number of subscribers identified in each category in Space E by the applicable rate should approximate the cable operators' gross receipts in Space K. *See Compulsory License for Cable Systems*, 43 FR 958, 959 (Jan. 5, 1978).

The Copyright Office's regulations require cable operators to provide ''[a] brief description of each subscriber category for which a charge is made by the cable system for the basic service of providing secondary transmissions of primary broadcast transmitters,'' as well as ''the number of subscribers to the cable system in each subscriber category,'' and the ''charge or charges made per subscriber to each subscriber category.'' 37 CFR 201.17(d)(6)(i)–(iii). The regulations state that for these purposes, ''[e]ach entity (for example, the owner of a private home, the resident of an apartment, the owner of a motel, or the owner of an apartment house) which is charged by the cable system for the basic service of providing secondary transmissions shall be considered one subscriber.'' 37 CFR 201.17(e)(6)(iii)(B). Space E of the SOA does not instruct cable operators to provide information on subscriber categories. Rather, Space E directs cable operators to report the number of subscribers in each ''Category of Service,'' a phrase which many cable operators may construe as relating to

tiers of service. Forms SA1–2 and SA3, p.2, Space E, Blocks 1 and 2.

Program Suppliers request that the Copyright Office revise the SOAs to require greater congruity between the ''gross receipts'' information and the subscriber and rate information provided on the SOAs as well as greater detail concerning the nature of the revenues that a cable operator includes and excludes in its ''gross receipts.'' Specifically, Program Suppliers request that the Copyright Office: (1) Revise Space E of the SOAs to solicit information on ''subscriber categories'' rather than ''categories of service;'' (2) revise Space K of the SOAs to include instructions specifying that the gross receipts reported in Space K should approximate calculated gross receipts (*i.e.*, the sum of the number of subscribers in each category identified in Space E, multiplied by the applicable rate), and (3) require the cable operator to briefly explain in Space K any variation of more than 10% between these calculated gross receipts and reported gross receipts.

Program Suppliers state that these revisions are necessary because they frequently find substantial variance in the Space E and Space K data. In addition, they assert that the changes will: (1) Reduce confusion among operators about whether to report subscriber categories or service categories; (2) mitigate inconsistent reporting practices; and (3) make compliance review more meaningful.

On a separate issue, Program Suppliers state that cable operators do not report multiple dwelling unit (''MDU'') subscriber data, for entities such as hotels, motels, and apartments, in a consistent manner. They assert that some cable operators report the total subscriber counts for each of the MDUs they serve while others report each MDU simply as one subscriber. Program Suppliers also state that some cable operators leave their SOAs blank regarding their service to MDUs. In those cases, Program Suppliers assert that they are unable to determine whether the blank area on the form indicates zero (meaning no MDU subscribers), whether the referenced question is not applicable (''N/A'') to that particular system, or whether the system simply has failed to provide the pertinent information. See Form SA1–2, p. 2; Form SA3, p.2, Space E (providing subscriber blanks for ''Motel, Hotel'' and ''Commercial,'' but offering no specific formula for how subscribership data should be tabulated other than the general direction that the cable operator should ''compute the number of 'subscribers' in each category by counting the number of billings in that category'' rather than ''the number of sets receiving service'').

Program Suppliers maintain that subscriber and rate information reported on SOAs should reflect the specific rate arrangement the cable operator has with the MDU. Program Suppliers specifically state that the figure in the Rate column in Space E of the SOA should be the rate (or range of rates) that the cable operator actually charged each of the subscribers included in the ''No. of Subscribers'' column on the last day of the accounting period. To address these issues, Program Suppliers request that the Copyright Office: (1) Revise the instructions for Space E to specify that the ''rate'' reported on the SOA for MDUs must reflect the specific rate arrangement the cable operator holds with the MDU (flat rate or per unit), as well as the amount billed for providing cable service pursuant to that arrangement, and (2) include an instruction that cable operators are not to leave spaces blank, but rather are to fill in each area with a zero or the designation ''N/A'' if a particular category does not apply to their system.

We seek comment on the need to revise Spaces E and K of the SOAs, and if so, whether Program Suppliers' suggestions are appropriate.

2. *Reporting Tiers of Service on Cable SOAs*

Currently, the ''Category of Service'' designation in Space E of the SOAs requires cable operators to report secondary transmission service for each service category provided. But, Copyright Office regulations require ''a brief description of each subscriber category for which a charge is made by a cable system for the basic service of providing secondary transmissions of primary broadcast transmitters.'' 37 CFR 201.17(e)(6)(i).

Program Suppliers claim that there is scant information about the tiers of service (*i.e.*, basic, expanded, digital, etc.) offered by cable operators, particularly about whether cable operators accurately include gross receipts for all tiers of service containing broadcast signals. *See* 37 CFR 201.17(e)(7); Forms SA1–2 (p. 6) and SA3 (p. 7) Section K.

Program Suppliers request that the Copyright Office revise its SOAs to include a new ''Space'' between existing Space E and Space F. Program Suppliers propose that this new Space would require cable operators to identify and describe (1) each tier of service they provide for a separate fee, noting which tiers contain broadcast signals, (2) the rates associated with each service tier, and whether the fees collected for each package are included or excluded from their gross receipts calculation, (3) the number of subscribers receiving each service tier, (4) the lowest tier of service including secondary broadcast transmissions that is available for independent subscription, and (5) any tier of service or equipment for which purchase is required as a prerequisite to obtaining another tier of service. Program Suppliers state that the proposed amendments will assist in verifying that cable operators are including, in their reported gross receipts, gross receipts from all tiers of service containing broadcast signals that are offered to subscribers for a separate fee.

We also note that over the past few years, cable operators have sold at least two new types of tiers other than the mandated analog basic service tier that contain broadcast signals. For example, several cable operators now market ''family friendly'' tiers to customers wanting to avoid content deemed inappropriate for children. Either these tiers include broadcast signals or the basic service tier must be purchased, along with a digital set top box, to access the desired programming. *See Family Packages From Major Pay TV Providers*, http://www.usatoday.com/money/media/2006–03–02–familytier–cht.htm (noting that Comcast, Time Warner, and Cox offer family tiers for about $32.00 that include broadcast signals and about 15 cable programming channels).

Should the Copyright Office amend Section 201.17 of its regulations, or revise the SOAs, to recognize the availability of family friendly tiers, and are the MPAA proposed revisions to the forms necessary? If so, would clarifying language in the SOA instructions further the same purposes?

3. *Specific Location of Cable Headend*

Section 111(f) of the Copyright Act states in relevant part that: ''For purposes of determining royalty fees under subsection (d)(1), two or more cable systems in contiguous communities under common ownership or control or operating from one headend shall be considered as one system.'' 17 U.S.C. 111(f). *See also* 37 CFR 201.17(b)(2). Moreover, two cable systems operating from the same headend are considered to be one system for purposes of calculating the Section 111 royalties ''even if they are owned by different entities.'' General Instructions, Form SA3, p. ii; General Instructions, Form SA1–2, p. ii; *see Compulsory License for Cable Systems*, 43 FR 958 (Jan. 5, 1978). Currently, cable operators are required to identify on the SOA only the community(ies) in

which they operate and not the location of the headend(s) serving those communities. *See* 37 CFR 201.17(e)(4), Form SA1–2, p. 1, Section D; Form SA3, p. 1, Section D.

Program Suppliers request that the Copyright Office revise Space D of Forms SA1–2 and SA3 and require each cable operator to identify on its SOA the location of each of its headends and the specific communities served from that headend. Program Suppliers imply that information on headend locations will help them determine whether cable operators are in fact complying with the Section 111(f) requirement to treat all cable systems operating from a common headend as a single cable system. We seek comment on whether the suggested changes are necessary and appropriate. In the case where a cable system utilizes multiple headends, which headend should be identified for purposes of Section 111?

4. *Identity of the County in Which the Reported Cable Community is Located*

The Copyright Office's regulations currently require cable systems to report ''the name of the community or communities served by the [cable] system.'' 37 CFR 201.17(e)(4). The SOAs also require cable operators to identify the cable communities they serve, including requiring them to provide information as to the ''city or town'' and ''state'' served. Forms SA1–2 and SA3, p.1, Space D. However, the SOAs do not currently require cable operators to identify the county in which the given community is located.

Program Suppliers request that the Copyright Office amend Space D of Forms SA1–2 and SA3 to require cable operators to identify the county where each cable community is located, in addition to the requirement to identify the city and state. They comment that having information on each cable community's county would help clarify whether a signal is local, distant, or partially distant (*i.e.*, distant to some subscribers but local to others) for cable compulsory license purposes. We seek comment on this proposed amendment and the rationale for implementing such a change to the SOAs.

III. Interest Payments to the Copyright Office and Copyright Infringement Liability

The Copyright Office's regulations require cable operators to pay interest on any royalties ''submitted as a result of a late payment or underpayment.'' *See* 37 CFR 201.17(i)(2); *see also* Form SA1–2, p.8, Space Q; SA3, p. 9, Space Q. Program Suppliers assert that any such payments do not preclude copyright owners from bringing an action against cable operators for copyright infringement and seeking remedies pursuant to 17 U.S.C. 502–506 and 509 for the time period for which the cable operators' royalty payments were not properly remitted, citing 17 U.S.C. 111(c)(2) (''[T]he willful or repeated secondary transmission to the public by a cable system of a primary transmission made by a broadcast station * * * is actionable as an act of infringement * * * (B) where the cable system has not deposited the statement of account and royalty fee required by [Section 111](d).''). According to Program Suppliers, neither the Copyright Office's SOAs, nor its regulations, clearly specify that the payment of interest to the Copyright Office for overdue and underpaid compulsory license fees does not shield a cable operator from liability for copyright infringement for unpaid royalty fees. Program Suppliers state that this ambiguity has resulted in cable operators suggesting that the payment of interest on late royalty payments and underpayments, regardless of how long overdue, absolves them from any other liability for copyright infringement.

Program Suppliers request that the Copyright Office amend its regulations and SOAs to include language clarifying that the Office's assessment of interest in Space Q of the SOA does not absolve cable operators from copyright infringement liability, pursuant to 17 U.S.C. 501–506 and 509, for the failure to make timely royalty payments. Program Suppliers note that in the recently enacted Copyright Royalty and Distribution Reform Act of 2004 (''CRDRA''), Congress made it clear that the terms set by Copyright Royalty Judges (''CRJs''), including late payment terms, shall not ''prevent the copyright holder from asserting other rights and remedies provided under this title.'' 17 U.S.C. 803(c)(7). Program Suppliers argue that there is no reason that the regulation adopted by the Copyright Office concerning late payments and underpayments should have a different effect. We seek comment on the proposed rule and form amendments.

IV. Definition of ''Community'' for Traditional Cable Systems and for Satellite Master Antenna Television Systems

As noted above, two or more cable systems constitute a single cable system for purposes of Section 111 if they are under common ownership or control and are located in the same or ''contiguous communities.'' 17 U.S.C. 111(f); 37 CFR 201.17(b)(2). Where common ownership of cable systems is established, defining the ''community'' served is important for the purpose of ascertaining whether two or more cable facilities operate in ''contiguous communities,'' and whether those facilities should file as a single cable system. The pertinent statutory and regulatory provisions are intended to prevent the artificial fragmentation of large cable systems into multiple smaller systems to avoid royalty payments properly due under Section 111. *See Compulsory License for Cable Systems*, 43 FR at 958 (''[T]he legislative history of the Act indicates that the purpose of this sentence [in Section 111(f)] is to avoid the artificial fragmentation of cable systems''').

The Copyright Office's regulations currently state that the term ''community,'' for purposes of Section 111, has the same meaning as a ''community unit'' as defined in the Federal Communications Commission's (''FCC '') rules and regulations. 37 CFR 201.17(e)(4). FCC regulations define ''community unit'' as a ''cable television system, or portion of a cable television system, that operates or will operate within a separate and distinct community or municipal entity (including unincorporated communities within unincorporated areas and including single, discrete unincorporated areas).'' 47 CFR 76.5(dd). The SOAs also set forth this FCC–based definition of ''community unit'' (although it incorrectly cites 47 CFR 76.5(mm)). See Forms SA1–2 and SA3, p.1, Space D.

Program Suppliers request that the Copyright Office clarify the regulatory definition of community. They proffer that the cable operator's ''franchise area'' should be the appropriate boundary distinction for defining cable communities. For Satellite Master Antenna Television Systems (''SMATV'') and other Private Cable Operators (''PCOs'') subject to Section 111, Program Suppliers assert that the term ''community'' should correspond to the ''community'' of the traditional cable systems serving the area within which the SMATV facility is located.

Program Suppliers imply that its proposed amendment would lessen the number of disputes with cable operators over what constitutes a cable ''community'' for reporting purposes under the copyright compulsory license. They assert that many cable operators operating over a large geographic area are attempting to artificially separate their systems into multiple smaller systems to reduce their royalty obligations under Section 111. They also assert that, in most cases, cable operators disaggregate cable systems in contiguous cable communities that

should be reported on a single Form SA3 and report these systems separately as multiple Forms SA1 and SA2 systems, the effect of which is the reduction of the royalty fees due and the elimination of the systems' 3.75% fees obligations.

We note, however, that the FCC has stated that community units are not equivalent to franchise areas for communications law purposes. *See Implementation of Sections of the Cable Television Consumer Protection and Competition Act of 1992: Rate Regulation*, 8 FCC Rcd 510, 515, fn 34 (1992) (noting that a cable franchise may span more than one community unit operating within a distinct geographic franchise area). We also note that the FCC has recently questioned whether cable system boundaries are coterminous with franchise area boundaries. *See Implementation of Section 621(a)(1) of the Cable Communications Policy Act of 1984 as amended by the Cable Television Consumer Protection and Competition Act of 1992,* 20 FCC Rcd 18581, 18588 (2005) (in seeking comment on the efficacy of the local cable franchising process under Section 621 of the Communications Act, the FCC asked, inter alia: ''Are cable systems generally equivalent to franchise areas?'').

In responding to MPAA's proposal to amend its rule, commenters should consider whether there is a general pattern of disaggregation by cable operators to support a rule change, and if so, is it reasonable to equate the term ''community'' with a cable operator's ''franchise area'' as defined by the Federal Communication Commission? What would be the advantages and disadvantages of defining community in this manner? We also seek comment on the impact such definitional changes may have on copyright royalty payments, and whether and to what extent the FCC's statements would affect the definitions and policies we may adopt in this proceeding.

V. Conclusion

We hereby seek comment from the public on the issues raised by the Program Suppliers in their Petition for Rulemaking. The petition and the attachments may be viewed on the Copyright Office website at: www.copyright.gov/docs/cable/soa–petition–attachment–a.pdf and www.copyright.gov/docs/cable/soa–attachments–b–c.pdf. If there are any other issues not raised or identified in this NOI related to the requested changes, interested parties may address those matters in their comments.

Dated: August 4, 2006

Tanya M. Sandros,

Associate General Counsel.

[FR Doc. E6–13112 Filed 8–9–06; 8:45 am]

BILLING CODE 1410–30–S

DEPARTMENT OF COMMERCE

National Oceanic and Atmospheric Administration

50 CFR Part 300

[Docket No. 050620161–5161–01; I.D. 061605A]

RIN 0648–AP61

South Pacific Tuna Fisheries

AGENCY: National Marine Fisheries Service (NMFS), National Oceanic and Atmospheric Administration (NOAA), Commerce.

ACTION: Proposed rule; request for comments.

SUMMARY: NMFS proposes to revise regulations implementing the South Pacific Tuna Act of 1988, as amended (SPTA), to reflect the changes agreed to in the Third Extension of the Treaty on Fisheries between the Governments of Certain Pacific Island States and the Government of the United States of America and its annexes, schedules, and implementing agreements, as amended (Treaty). New provisions under the Treaty relate to vessel monitoring system (VMS) requirements, vessel reporting requirements, area restrictions for U.S. purse seine vessels fishing under the Treaty, and allowing U.S. longline vessels to fish on the high seas portion of the Treaty Area. These actions are needed to bring the United States into compliance with its obligations under the Treaty.

DATES: Comments must be received by October 10, 2006.

ADDRESSES: You may submit comments on the proposed rule or the initial regulatory flexibility analysis (IRFA), identified by 0648–AP61, by any of the following methods:

- E-mail: *0648–AP61@noaa.gov*: Include 0648–AP61 in the subject line of the message.
- Federal eRulemaking Portal: *http://www.regulations.gov*. Follow the instructions for submitting comments.
- Facsimile (fax): 808–973–2941. Attention: Raymond P. Clarke.
- Mail: Regional Administrator, NMFS, Pacific Islands Regional Office, 1601 Kapiolani Blvd., Suite 1110, Honolulu, HI 96814–4700.

Copies of the environmental assessment (EA), regulatory impact review, and IRFA that were prepared for this rule may be obtained from the Regional Administrator of NMFS, Pacific Islands Regional Office, at the above address.

Send comments regarding the reporting burden estimate or any other aspect of the collection-of-information requirements in these management measures, including suggestions for reducing the burden, to the NMFS address listed above and to David Rostker, Office of Management and Budget (OMB), by email at *David_Rostker@omb.eop.gov*, or by fax at 202–395–7285.

FOR FURTHER INFORMATION CONTACT: Raymond P. Clarke, 808–944–2200.

SUPPLEMENTARY INFORMATION:

Background on the Treaty

The Treaty, implemented through the SPTA (16 U.S.C. 973 *et seq.*) and its implementing regulations at 50 CFR part 300, subpart D, governs the conduct of U.S. fishing vessel operations in the Treaty Area. The Treaty authorizes, and regulates through a licensing system, U.S. purse seine vessels operations within all or part of the exclusive economic zones (EEZs) of the 16 Pacific Island parties to the Treaty (PIPs), thus providing access to a large portion of the western and central Pacific Ocean. The 16 PIPs, each a sovereign state, are members of the Pacific Islands Forum, an inter-governmental body.

Until recently the Treaty allowed U.S. vessels fishing for albacore by the trolling method to fish in the high seas portion of the Treaty Area, but it did not allow U.S. longline vessels to do so. The Treaty has since been amended to allow U.S. longline vessels to fish in the high seas portion of the Treaty Area and the SPTA was amended in 2004 to reflect that change (Public Law 108–219). U.S. longline and albacore troll vessels fishing in the high seas portion of the Treaty Area are not subject to the Treaty's or SPTA's licensing requirements.

The Treaty entered into force in 1988 following ratification by the U.S. and the PIPs. After an initial 5–year agreement, the Treaty was renewed in 1993 for an additional 10 years. Currently, the Treaty allows for a maximum of 45 licenses to U.S. purse seine fishing vessels to fish in the Licensing Area of the Treaty. Of the 45 licenses, 5 are reserved for ''joint venture'' arrangements: specifically, U.S. purse seine fishing vessels engaged in activities designed to promote the maximization of benefits generated for PIPs, such as the use of onshore facilities in PIPs, purchase of equipment

and supplies from PIPs and employment of PIP nationals on such vessels. The Licensing Area includes all or part of the EEZs of the following countries: Australia, Cook Islands, Federated States of Micronesia, Fiji, Kiribati, Marshall Islands, Nauru, New Zealand, Niue, Palau, Papua New Guinea, Samoa, Solomon Islands, Tonga, Tuvalu, and Vanuatu. The Treaty Area, which is the area bounded by the coordinates provided in paragraph 1(k) of Article 1 of the Treaty, is approximately 10 million square miles (26 million square kilometers) in size. As of June 2006, 12 U.S. vessels were active in the fishery under the Treaty (there have been no joint venture arrangements implemented to this date).

The Treaty establishes the terms and conditions associated with certain aspects of U.S. purse seine vessel operations and conditions of access to the EEZs of the PIPs. Treaty terms and conditions include, but are not limited to, various fees, area closures, reporting requirements, and monitoring requirements. Additionally, the U.S. has certain Treaty obligations, such as administrative requirements, payment of licensing and access fees, and the collection, compilation, and summarization of fishery related data. Under the current agreement governing financial and administrative aspects of the Treaty (Agreement between the Government of the United States of America and the South Pacific Forum Fisheries Agency), the United States is obligated to pay an annual fee of 21 million dollars. The U.S. Government pays 18 million dollars under a technical assistance agreement, and the U.S. purse seine tuna industry, represented by the American Tunaboat Association, provides the additional 3 million dollars. All these funds are paid to the Pacific Islands Forum Fisheries Agency (FFA), headquartered in Honiara, Solomon Islands. The FFA Secretary General and staff act as the Treaty administrator on behalf of the PIPs.

NMFS has been designated by the U.S. Secretary of Commerce as the agency responsible for implementing fishery conservation and management measures required to be imposed on U.S. fishing vessel owners and operators under the Treaty and the SPTA. U.S. operational, administrative, and enforcement commitments under the Treaty are carried out by NMFS and the U.S. Coast Guard.

Background on the Regional VMS

Under the Treaty, U.S. purse seine vessel operators participating in the western and central Pacific Ocean purse seine fishery must submit a variety of written reports and provide electronic communications regarding vessel position. At present, these reports are submitted via e-mail communications to the FFA or the appropriate PIP. The non-electronically collected information from U.S. participants is transmitted to the FFA, typically through NMFS, Pacific Islands Regional Office, or its field office in Pago Pago, American Samoa.

VMS programs that utilize shipboard transceivers, or VMS units, are used successfully in several fisheries around the world for fishery monitoring, compliance, and surveillance purposes. These automated systems assist fishery managers and enforcement personnel in monitoring compliance with certain types of fishery regulations, and are particularly useful in circumstances where, as under the Treaty, fishing vessels operate over large geographic areas and vessel operators are subject to area restrictions. The VMS automates monitoring and surveillance using satellite and communications technology to send location and identity information from a fishing vessel to a designated land-based monitoring station. Shipboard VMS units can be programmed to report at set time intervals. Some systems allow remote programming of the time intervals. This is typically done from a land-based monitoring station via the satellite communications system. The reporting intervals may be adjusted (e.g. from 1 time per day to 20 times per hour) based on operational needs. In some systems, the VMS units can receive and process polling commands, such as a request to transmit the vessel's current position. Position fixing is typically done using a global positioning system receiver integrated into the VMS unit.

In 1992, the parties to the Treaty signaled recognition of the potential value of a VMS by including language in Annex 1 Part 8 stating ''It is understood that a region-wide vessel tracking system applicable to all vessels licensed to fish in the Treaty Area may be established. United States vessels with a license to fish under the Treaty shall participate in such a system and shall install and operate a transponder of a type and in such a manner as may be agreed by the Parties. It is understood that data derived through the system shall be treated as confidential business information and that the terms and conditions for access to that information shall be a matter of discussions between the Parties''. If VMS data are requested under the Freedom of Information Act (FOIA), the responding agency would be required to determine the releasability of the information under Exemption 4 of the FOIA pertaining to the release of confidential business information, as well as any other applicable exemptions.

Recognizing the value of VMS to the management regime, the 16 PIPs, all members of the FFA's policy coordinating body called the Forum Fisheries Committee (FFC), implemented a regional VMS to assist in the management of highly migratory species fishery resources within their EEZs. Specifically, the FFC mandated that as of October 1, 2001, all fishing vessels operating under bilateral or multilateral fishery access agreements within the EEZs of member nations would be required to participate in the FFA's regional VMS. Under the terms of the Treaty, the U.S. agreed that vessels licensed to fish in the Treaty Area would be required to participate when a VMS requirement was implemented within the EEZs of the PIPs.

The principal purpose of the FFA regional VMS is to support existing surveillance assets such as patrol vessels, surveillance flights, and regional at-sea fishery observers. Currently, vessels licensed under the Treaty operate across an area of approximately 10 million square miles (26 million square kilometers). Effective surveillance of an area of this size is extremely difficult. The FFA regional VMS is expected to be a valuable asset in effectively monitoring this vast area in a cost-effective manner, and is expected thereby to contribute to the sustainability of fishery resources. The specifications for the FFA Regional VMS were developed and implemented based upon FFA member countries' experiences with VMS and taking into consideration the need to ensure a high degree of information security and operational efficiency, with minimum potential for tampering.

The United States has determined that a robust regional VMS within the Treaty Area is needed in order to effectively manage the fleets of the various distant water fishing nations that operate in the western and central Pacific Ocean. Now that a regional VMS has been established and domestic VMS-related regulations have been established in most of the PIPs, the U.S. is prepared to participate in the system.

Modifications to the Treaty and the SPTA and Proposed Regulations

In 2002 the Treaty was extended for the second time since its inception in 1988 (the 2002 extension is referred to as the Third Extension). To fulfill the commitments of the United States to implement the Treaty amendments

made in the Third Extension, as well as subsequent technical modifications made in the seventeenth annual formal consultation of the parties to the Treaty in March 2005, NMFS proposes to revise the regulations implementing the SPTA. Four modifications were made to the Treaty: (1) Modifications to vessel reporting requirements, (2) modifications to Closed and Limited Areas, (3) new VMS requirements, and (4) longline high seas access.

The four modifications would be implemented in this proposed rule through revisions to the regulations implementing the SPTA (with respect to longline high seas access, the SPTA has also been amended). These modifications and how they would be implemented through this proposed rule are described below. In addition to amending the regulations to implement these Treaty modifications, the regulations would be amended to explicitly include the details of certain requirements that are currently incorporated only by reference to the Treaty and its annexes.

(1) *Modifications to vessel reporting requirements:* The purse seine vessel reporting requirements have been modified such that: times must be reported in Universal Coordinated Time (also known as UTC) rather than Greenwich Mean Time (or GMT); catches must be reported in metric tons (rather than short tons); the weekly vessel report to the FFA, known as the WEEK report, is eliminated; the weekly reports to national authorities continue but are amended to indicate whether or not an observer is on board the vessel; the report for entry into port for unloading must be submitted at least 24 hours prior to (rather than any time prior to) the vessel's arrival into port; and the vessel operator is required to report the estimated date and time of arrival and the estimated date of departure from port in the report for port departure and the report entry into port for unloading, as appropriate.

(2) *Modifications to Closed and Limited Areas:* Papua New Guinea's archipelagic waters are now closed to U.S. purse seine vessels (prior to the Third Extension certain of these waters were open to U.S. vessels fishing under the Treaty) and the Solomon Islands EEZ is now opened to fishing under the Treaty, with the exception of the area from the archipelagic baseline for the main island group (as defined in Solomon Islands' Delimitation of Marine Waters Act 1978) out to 60 nautical miles (111 kilometers) that is closed to fishing (prior to the Third Extension all but a small portion of the Solomon Islands EEZ was a Closed Area; the remainder was a Limited Area in which effort by U.S. purse seine vessels was restricted).

(3) *VMS requirements:* To comply with the FFC's October 2001 mandate regarding the regional VMS and the Treaty amendments made under the Third Extension, NMFS proposes to require each U.S. vessel licensed under the Treaty to have installed and to carry, operate, and maintain a VMS unit while in the Treaty Area. The VMS unit and attendant software would have to be of a type approved by the FFA as Treaty Administrator. If the VMS unit malfunctions or fails, the owner or operator would be required to provide notice of such failure or malfunction, submit substitute reports by an alternative means at intervals of no greater than 8 hours, and if directed by the FFA or NMFS, proceed to a designated port to repair or replace the VMS unit. Owners and operators of vessels licensed under the Treaty would also be required to register annually on the FFA Vessel Register (in the past the FFA administered a ''FFA VMS Register of Foreign Fishing Vessels'' and a ''FFA Regional Register of Foreign Fishing Vessels'' but the two have been consolidated into a single ''FFA Vessel Register''). NMFS would administratively facilitate the applications for registration on the register, but vessel owners and operators would be responsible for completing the FFA registration forms and the payment of associated fees. Once a vessel has been granted registered status on the FFA Vessel Register, the FFA would notify the license holder of such status. Vessel owners and operators are advised to retain a copy of this notice as a record of a vessel's status on the FFA Vessel Register.

The contact information for the FFA, as Treaty Administrator, for the purpose of the manual position reports and the notifications required in certain circumstances in the proposed VMS-related regulations, as well as for informational purposes, is as follows:

- Telephone: Country code 677, number 21124.
- Facsimile: Country code 677, number 23995.
- E-mail: *VMS.Help@ffa.int*.

Updated contact information may be obtained from NMFS (see **ADDRESSES**).

Additional contact information for the FFA, as Treaty Administrator, for informational purposes is as follows:

- Internet: *http://www.ffa.int*.
- Mail: Secretary General, Pacific Islands Forum Fisheries Agency, PO Box 629, Honiara, Solomon Islands

Updated contact information may be obtained from the NMFS American Samoa field station, telephone: country code 684, number 633–5598; facsimile: country code 684, number 633–1400, or the NMFS Pacific Islands Regional Office (see **ADDRESSES**).

The VMS data would be treated by NMFS as confidential business information. However, if VMS data are requested under FOIA, the responding agency would be required to determine the releasability of the information under Exemption 4 of the FOIA pertaining to the release of confidential business information, as well as any other applicable exemptions. These new VMS requirements appear in the proposed regulations at § 300.45.

(4) *Longline high seas access:* This proposed rule would exempt U.S. longline vessels from the prohibitions currently listed in 50 CFR 300.38, effectively allowing authorized U.S. longline vessels to fish in the high seas portions of the Treaty Area. The original language of the Treaty stated that only purse seine vessels could operate under the Treaty, with one exception, that being for albacore vessels that trolled (fished) while transiting through the high seas portion of the Treaty Area. The unintended consequence of this language is that it did not allow for other types of U.S. vessels, including longline vessels, to fish on the high seas portions of the Treaty Area. It was never the intent of the parties to the Treaty to exclude U.S. longline vessels to areas open to all others fleets in the region. In 1999, after an expressed interest on the part of the U.S. longline industry, the parties agreed to rectify the situation and to allow U.S. longline vessels access to the high seas portions of the Treaty Area. This exemption for U.S. longline vessels to fish in the high seas portion of the Treaty Area appears in the proposed regulations at § 300.39(a).

Classification

NMFS prepared an EA for this action that discusses the impact on the environment as a result of this proposed rule. A Finding of No Significant Impact was signed on July 23, 2004. A copy of the EA is available from NMFS (see **ADDRESSES**).

This proposed rule has been determined to be not significant for purposes of Executive Order 12866.

NMFS prepared an IRFA that describes the economic impact this proposed rule, if adopted, would have on small entities. NMFS invites public comment on the IRFA (see **ADDRESSES**). A description of the action, an explanation of why it is being considered, and the legal basis for this action are contained at the beginning of this section in the preamble and in the

SUMMARY section of the preamble. A summary of the analysis follows:

Three of the measures in this proposed action, the modified vessel reporting requirements, the VMS requirements, and the modified Closed and Limited Areas, would apply to owners and operators of U.S. purse seine vessels that operate in the Treaty Area. The measure to allow longline vessels access to the high seas portion of the Treaty Area would apply to owners and operators of U.S. longline vessels operating in the Pacific Ocean. Based on the number of U.S. purse seine vessels licensed under the Treaty and the number of U.S. longline vessels permitted to operate in the Pacific Ocean under the Magnuson-Stevens Fishery Conservation and Management Act and/or the High Seas Fishing Compliance Act as of June 2006, NMFS estimates that 12 purse seine vessels and approximately 183 longline vessels would be subject to the rule. These purse seine and longline vessels are owned by approximately 9 and 183 business entities, respectively. Based on (limited) financial information about these fishing fleets, NMFS believes that as many as 7 and 183 of the affected purse seine and longline business entities, respectively, are small business entities (i.e. they have gross annual revenues of less than $4.0 million).

The reporting, recordkeeping, and other compliance requirements of this proposed rule are described in the **SUPPLEMENTARY INFORMATION** section of this preamble. The classes of small entities subject to the requirements and the types of professional skills necessary to fulfill the requirements are as follows:

(1) *Vessel reporting requirements:* These requirements are part of a collection of information approved by the Office of Management and Budget (OMB) under the Paperwork Reduction Act (PRA) (OMB control number 0648–0218). Approximately seven small business entities would be subject to these requirements. The cost of compliance would be minor: because the changes have to do only with units of measure, the timing of reports, and the reporting of one additional piece of information (whether or not an observer is on board), they would require only minor modifications in habit on the part of the vessel operators. Fulfillment of these reporting requirements is not expected to require any professional skills that the vessel owners and operators do not already possess.

(2) *Fishing area modifications:* Approximately seven small business entities would be subject to these requirements. These modifications would not impose any new reporting or recordkeeping requirements (within the meaning of the PRA) on purse seine vessel owners or operators, but they could affect the economic performance of such vessels. It is not known whether the density of exploitable stocks in the affected areas is greater or less than in the fleet's fishing grounds generally. Because the target stocks are a highly fluid resource in this region, with high turnover rates and significant movements of fish through the region, any such differences are likely to be small. The measure is therefore not expected to have a strong direct effect on catch rates or resulting economic returns. However, the modifications would affect the operational flexibility of U.S. purse seine vessels, and such effects could in turn bring economic impacts. Vessels would have greater operational flexibility through enhanced access to the Solomon Islands EEZ but less flexibility from reduced access to the waters around Papua New Guinea. It is not possible to predict whether the expected positive impacts to small entities from the former effect would be less than or greater than the expected negative impacts from the latter effect. This is due to a lack of information about the extent and value of the operational flexibility afforded by each of the two affected areas, as well as the general difficulty in predicting the behavior of vessels that operate in response to many biophysical and economic factors and conditions, many of which change markedly from year to year. The impact, while difficult to predict, is not expected to differ by entity class (i.e. by small versus large entity). Fulfillment of these requirements is not expected to require any professional skills that the vessel owners and operators do not already possess.

(3) *VMS requirements:* These requirements are part of a collection of information approved by OMB under the PRA (OMB control number 0648–0218). Approximately seven small business entities would be subject to these requirements. The expected annual cost of complying with the VMS requirements is no more than about $4,000 per vessel (including annualized costs of $1,000-$2,000 for the purchase of VMS units and approximately $200 for the installation and activation of VMS units, which might have to be replaced as often as once every four years; $1,375 for the annual FFA VMS registration fee; and approximately $500 for maintenance and routine operation). This represents about one tenth of one percent of the total costs of production for a typical purse seine vessel, and perhaps as much as two tenths of one percent of the total costs of production for the smallest affected small business entity. Fulfillment of these VMS requirements is not expected to require any professional skills that the vessel owners and operators do not already possess.

(4) *Longline high seas access:* Approximately 183 small business entities would be subject to this measure. Opening the high seas areas of the Treaty Area to U.S. longline vessels would not impose any additional reporting, recordkeeping, or other compliance requirements. Since the measure would expand the fishing area available to U.S. longline vessels, increasing their operational flexibility, it is expected to have positive or neutral impacts on affected small entities.

NMFS is not aware of any relevant Federal rules that duplicate, overlap with, or conflict with this proposed rule. NMFS considered several alternatives to this proposed rule. As a party to the Treaty, the U.S. has committed itself to implementation of the Treaty amendments. Consequently, NMFS has limited discretion with regard to implementation of the SPTA. One alternative NMFS considered is to take no action. However, NMFS rejected this alternative because it would not achieve the objectives of the SPTA, which are to implement the terms of the Treaty. NMFS also considered several alternatives to the VMS requirements. One is to encourage voluntary compliance with the VMS measures rather than issuing a rule that would make them mandatory. To the extent that voluntary compliance is achieved, the costs to small entities would be the same as under the preferred alternative. Because relying on voluntary compliance would make it difficult to ensure that the VMS requirements of the Treaty are met, this alternative is not preferred. Two other non-regulatory alternatives, which would require agreement by the parties to the Treaty, are to obtain the desired compliance and monitoring benefits via enhanced vessel observer coverage or enhanced aerial and surface surveillance activities rather than via a VMS. These alternatives could achieve the objectives of the SPTA at potentially lesser cost to small entities. However, the projected costs to the public of enhancing vessel observer coverage or aerial and surface surveillance to the extent needed to achieve the compliance and monitoring benefits offered by a VMS are significantly greater than the expected total costs of the VMS alternative. Because the cost of VMS is significantly less than the costs of enhanced observer

coverage or enhanced aerial and surface monitoring, it appears more appropriate to choose the more cost-effective VMS alternative. A copy of the IRFA is available from NMFS (see **ADDRESSES**).

This proposed rule contains collection-of-information requirements subject to the PRA and which have been approved by OMB under control number 0648–0218. The public reporting burden for the modified vessel reporting requirements is estimated to average 1 hour per catch report, with about five catch reports per year per respondent, and about 30 minutes per unloading logsheet, with about six unloading logsheets per year per respondent. The public reporting burden for the VMS requirements is estimated to average 30 minutes per year per respondent for what was formerly called the FFA Regional Register of Foreign Fishing Vessels application form, 15 minutes per year per respondent for what was formerly called the FFA VMS Register of Foreign Fishing Vessels application form, and 2 hours per year per respondent for VMS unit maintenance. As explained previously, the FFA consolidated the two previously-used vessel registers into a single ''FFA Vessel Register'' on about September 1, 2005, and there is now a single application form for the register. This consolidation had no effect on the information collection requirement or the estimated public reporting burden.

Public comment is sought regarding: whether these collection-of-information requirements are necessary for the proper performance of the functions of the agency, including whether the information will have practical utility; the accuracy of the burden estimates; ways to enhance the quality, utility, and clarity of the information to be collected; and ways to minimize the burden of the collection of information, including through the use of automated collection techniques or other forms of information technology. Send comments on these or any other aspects of the collection-of-information requirements to NMFS (see **ADDRESSES**) and to David Rostker, OMB, by email at *David_Rostker@omb.eop.gov* or by fax at 202–395–7285.

Notwithstanding any other provision of the law, no person is required to respond to, and no person shall be subject to penalty for failure to comply with, a collection of information subject to the requirements of the PRA, unless that collection of information displays a currently valid OMB control number.

List of Subjects in 50 CFR Part 300

Administrative practice and procedure, Fish, Fisheries, Fishing, Marine resources, Reporting and recordkeeping requirements, Treaties.

Dated: August 3, 2006.

William T. Hogarth,

Assistant Administrator for Fisheries, National Marine Fisheries Service.

For the reasons set out in the preamble, NMFS proposes to amend 50 CFR 300, subpart D, as follows.

PART 300—INTERNATIONAL FISHERIES REGULATIONS

1. The authority citation for 50 CFR part 300, subpart D continues to read as follows:

Authority: 16 U.S.C. 973–973r.

2. In § 300.31, definitions for ''FFA Vessel Register'', ''Pacific Islands Forum Fisheries Agency'' or ''FFA'', ''UTC'', and ''Vessel Monitoring System Unit'' or ''VMS unit'' are added, the definition for ''Limited Area'' is deleted, and definitions for ''Regional Administrator'', ''Applicable national law'', ''Closed Area'', and ''Treaty Area'' are revised to read as follows:

§ 300.31 Definitions.

* * * * *

Applicable national law means any of the laws of Pacific Island Parties in the following table and any regulations or other instruments having the force of law implemented pursuant to these laws:

Pacific Island Party	Laws
AUSTRALIA	Antarctic Marine Living Resources Conservation Act, 1981. Fisheries Management Act, 1991. Fisheries Administration Act, 1991. Statutory Fishing Rights Charge Act, 1991. Fisheries Legislation (Consequential Provisions) Act, 1991. Foreign Fishing Licences Levy Act, 1991.Fishing Levy Act, 1991. Fisheries Agreements (Payments) Act, 1991. Fisheries Agreements (Payments) Act, 1991. Torres Strait Fisheries Act, 1984. Whale Protection Act, 1980.
COOK ISLANDS.	Exclusive Economic Zone (Foreign Fishing Craft) Regulations, 1979. Territorial Sea and Exclusive Economic Zone Act, 1977.Marine Resources Act, 1989.
FEDERATED STATES OF MICRONESIA	Titles 18 and 24 of the Code of the Federated States of Micronesia, as amended by Public Law Nos. 2-28, 2-31, 3-9, 3-10, 3-34, and 3-80.
FIJI	Fisheries Act (Cap. 158). Fisheries Regulations (Cap. 158). Marine Spaces Act (Cap. 158A). Marine Spaces (Foreign Fishing Vessels) Regulations, 1979.
KIRIBATI	Fisheries Ordinance, 1979. Fisheries (Amendment) Act, 1984. Marine Zones (Declaration) Act, 1983. Fisheries (Pacific Island States'Treaty with the United States) Act 1988.

Pacific Island Party	Laws
MARSHALL ISLANDS	Title 33, Marine Resources Act, as amended by P.L. 1989-56, P.L. 1991-43, and P.L. 1992-25 of the Marshall Islands Revised Code.
NAURU	Interpretation Act, 1971. Interpretation Act (Amendment) Act No. 1 1975. Interpretation Act (Amendment) Act No. 2 1975. Marine Resources Act, 1978.
NEW ZEALAND	Antarctic Marine Living Resources Act, 1981.Continental Shelf Act, 1964. Conservation Act, 1987. Driftnet Prohibition Act, 1991. Exclusive Economic Zone (Foreign Fishing Craft) Regulations, 1978. Fishing Industry Board Act, 1963. Fisheries Act, 1983. Marine Mammals Protection Act, 1978. Marine Reserves Act, 1971. Marine Pollution Act, 1974. Meat Act, 1964. Territorial Sea and Exclusive Economic Zone Act, 1977. Tokelau (Territorial Sea and Exclusive Economic Zone) Act, 1977. Submarine Cables and Pipelines Protection Act, 1966. Sugar Loaf Islands Marine Protected Area Act, 1991. Wildlife Act, 1953.
NIUE	Niue Fish Protection Ordinance 1965. Sunday Fishing Prohibition Act 1980. Territorial Sea and Exclusive Economic Zone Act 1978.
PALAU	Palau National Code, Title 27.
PAPUA NEW GUINEA	Fisheries Act (Cap 214). Fisheries Regulations (Cap 214). Fisheries (Torres Strait Protected Zone) Act, 1984. National Seas Act (Cap 361). Tuna Resources Management Act (Cap 224). Whaling Act (Cap 225).
SOLOMON ISLANDS	Delimitation of Marine Waters Act, 1978. Fisheries Act, 1972. Fisheries Limits Act, 1977. Fisheries Regulations, 1972. Fisheries (Foreign Fishing Vessels) Regulations, 1981. Fisheries (United States of America) (Treaty) Act 1988.
TONGA	Fisheries Act, 1989.
TUVALU	Fisheries Act (Cap 45). Fisheries (Foreign Fishing Vessel) Regulations, 1982. Marine Zones (Declaration) Act, 1983. Foreign Fishing Vessels Licensing (US Treaty) Order 1987.
VANUATU	Fisheries Act 1982 (Cap 158). Fisheries Regulations 1983. Maritime Zones Act 1981 (Cap 138).
SAMOA	Exclusive Economic Zone Act, 1977. Territorial Sea Act, 1971. Fisheries Act, 1988.

* * * * *

Closed area means any of the areas in the following table, as depicted on charts provided by the Regional Administrator and as further described in additional information that may be provided by the Regional Administrator:

Pacific Island Party	Area
AUSTRALIA	All waters within the seaward boundary of the Australian Fishing Zone (AFZ) west of a line connecting the point of intersection of the outer limit of the AFZ by the parallel of latitude 25° 30′ South with the point of intersection of the meridian of longitude 151 East by the outer limit of the AFZ and all waters south of the parallel of latitude 25° 30′ South.
COOK ISLANDS	Territorial Sea.
FEDERATED STATES OF MICRONESIA	Three nautical mile territorial sea and nine nautical mile exclusive fishery zone and on all named banks and reefs as depicted on the following charts: DMAHTC NO 81019 (2nd. ed., Mar. 1945; revised 7/17/72; corrected through NM 3/78 of 21 June 1978). DMAHTC NO 81023 (3rd. ed., 7 Aug. 1976). DMAHTC NO 81002 (4th. ed., 26 Jan. 1980; corrected through NM 4/80).
FIJI	Internal waters, archipelagic waters and territorial seas of Fiji and Rotuma and its Dependencies.
KIRIBATI	Within archipelagic waters as established in accordance with Marine Zones (Declaration) Act 1983; within 12 nautical miles drawn from the baselines from which the territorial seas is measured; and within 2 nautical miles of any anchored fish aggregating device within the Kiribati exclusive economic zone for which notification of its location shall be given by geographical coordinates.
MARSHALL ISLANDS	12 nautical mile territorial sea and area within two nautical miles of any anchored fish aggregating device within the Marshall Islands exclusive economic zone for which notification of its location shall be given by geographical coordinates.
NAURU	The territorial waters as defined by Nauru Interpretation Act, 1971, Section 2.
NEW ZEALAND	Territorial waters; waters within 6 nautical miles of outer boundary of territorial waters; all waters to west of New Zealand main islands and south of 39° South latitude; all waters to east of New Zealand main islands south of 40° South latitude; and in respect of Tokelau: areas within 12 nautical miles of all island and reef baselines; twelve and one half nautical miles either side of a line joining Atafu and Nukunonu and Faka'ofo; and coordinates as follows: Atafu: 8 ° 35' 10 ″ S, 172 ° 29' 30 ″ W Nukunonu: 9 ° 06' 25 ″ S, 171 ° 52' 10 ″ W Faka'ofo: 9 ° 22' 30 ″ S, 171 ° 16' 30 ″ W
NIUE	Territorial sea and within 3 nautical miles of Beveridge Reef, Antiope Reef and Haran Reef as depicted by appropriate symbols on NZ 225F (chart showing the territorial sea and exclusive economic zone of Niue pursuant to the Niue Territorial Sea and Exclusive Economic Zone Act of 1978).
PALAU	Within 12 nautical miles of all island baselines in the Palau Islands; and the area:

Pacific Island Party	Area
	commencing at the north-easternmost intersection of the outer limit of the 12 nautical mile territorial sea of Palau by the arc of a circle having a radius of 50 nautical miles and its center at Latitude 07 ° 16′ 34 ″ North, longitude 134 ° 28' 25 ″ East, being at about the center of the reef entrance to Malakal Pass; running thence generally south-easterly, southerly, south-westerly, westerly, north-westerly, northerly and north-easterly along that arc to its intersection by the outer limit of the 12 nautical mile territorial sea; and thence generally northerly, north-easterly, easterly, south-easterly and southerly along that outer limit to the point of commencement. Where for the purpose of these specifications it is necessary to determine the position on the surface of the Earth of a point, line or area, it shall be determined by reference to the World Geodetic System 1984; that is to say, by reference to a spheroid having its center at the center of the Earth and a major (equatorial) radius of 6,378,137 meters and a flattening of 1/298.2572.
PAPUA NEW GUINEA	All territorial seas, archipelagic and internal waters.
SOLOMON ISLANDS	All internal waters, territorial seas and archipelagic waters; and such additional waters around the main group archipelago, as defined under the Delimitation of Marine Waters Act 1978, not exceeding sixty nautical miles.
TONGA	All waters with depths of not more than 1,000 meters, within the area bounded by the fifteenth and twenty third and one half degrees of south latitudes and the one hundred and seventy third and the one hundred and seventy seventh degrees of west longitudes; also within a radius of twelve nautical miles from the islands of Teleki Tonga and Teleki Tokelau.
TUVALU	Territorial sea and waters within two nautical miles of all named banks, that is Macaw, Kosciusko, Rose, Bayonnaise and Hera, in Tuvalu exclusive economic zone, as depicted on the chart entitled ''Tuvalu Fishery Limits'' prepared by the United Kingdom Hydrographic Department, Taunton, January 11, 1981.
VANUATU	Archipelagic waters and the territorial sea, and internal waters.
SAMOA	Territorial sea; reefs, banks and sea-mounts and within 2 nautical miles of any anchored fish aggregating device within the Samoa exclusive economic zone for which notification of its location shall be given by geographical coordinates.

* * * * *

FFA Vessel Register means the registry of fishing vessels maintained by the FFA, comprising those vessels which are in good standing and licensed to fish in the waters of FFA member countries, including those vessels licensed under § 300.32.

* * * * *

Pacific Islands Forum Fisheries Agency or *FFA* means the organization established by the 1979 South Pacific Forum Fisheries Agency Convention.

Regional Administrator means the Regional Administrator, Pacific Islands Region, NMFS, 1601 Kapiolani Blvd., Suite 1110, Honolulu, HI 96814, or a designee.

* * * * *

Treaty Area means all waters north of 60 S. lat. and east of 90 E. long., subject to the fisheries jurisdiction of Pacific Island Parties, and all other waters within rhumb lines connecting the following points, except for waters subject to the jurisdiction in accordance with international law of a State which is not a party to the Treaty:

Point	Latitude	Longitude
A	2° 35′ 39″ S	141° 00′ 00″ E
B	1° 01′ 35″ N	140° 48′ 35″ E
C	1° 01′ 35″ N	129° 30′ 00″ E
D	10° 00′ 00″ N	129° 30′ 00″ E
E	14° 00′ 00″ N	140° 00′ 00″ E
F	14° 00′ 00″ N	142° 00′ 00″ E
G	12° 30′ 00″ N	142° 00′ 00″ E
H	12° 30′ 00″ N	158° 00′ 00″ E
I	15° 00′ 00″ N	158° 00′ 00″ E
J	15° 00′ 00″ N	165° 00′ 00″ E
K	18° 00′ 00″ N	165° 00′ 00″ E
L	18° 00′ 00″ N	174° 00′ 00″ E
M	12° 00′ 00″ N	174° 00′ 00″ E
N	12° 00′ 00″ N	176° 00′ 00″ E
O	5° 00′ 00″ N	176° 00′ 00″ E
P	1° 00′ 00″ N	180° 00′ 00″
Q	1° 00′ 00″ N	164° 00′ 00″ W
R	8° 00′ 00″ N	164° 00′ 00″ W
S	8° 00′ 00″ N	158° 00′ 00″ W
T	0° 00′ 00″	150° 00′ 00″ W
U	6° 00′ 00″ S	150° 00′ 00″ W
V	6° 00′ 00″ S	146° 00′ 00″ W
W	12° 00′ 00″ S	146° 00′ 00″ W
X	26° 00′ 00″ S	157° 00′ 00″ W
Y	26° 00′ 00″ S	174° 00′ 00″ W
Z	40° 00′ 00″ S	174° 00′ 00″ W
AA	40° 00′ 00″ S	171° 00′ 00″ W
AB	46° 00′ 00″ S	171° 00′ 00″ W
AC	55° 00′ 00″ S	180° 00′ 00″
AD	59° 00′ 00″ S	160° 00′ 00″ E
AE	59° 00′ 00″ S	152° 00′ 00″ E and north along 152° degrees of East longitude until intersecting the Australian 200–nautical-mile limit.

UTC means Universal Coordinated Time.

Vessel Monitoring System Unit or *VMS unit* means Administrator-approved VMS unit hardware and software installed on a vessel and required under § 300.45 as a component of the regional VMS administered by the FFA to transmit information between the vessel and the Administrator and/or other reporting points designated by NMFS.

3. In § 300.32, paragraph (d) is revised to read as follows:

§ 300.32 Vessel licenses.

* * * * *

(d) The number of available licenses is 45, five of which shall only be available to fishing vessels of the United States engaged in joint venture arrangements, specifically: vessels engaged in fishing activity designed to promote maximization of the benefits generated for the Pacific Island Parties from the operations of fishing vessels licensed pursuant to the Treaty, as determined by the Administrator. Such activity can include the use of canning, transshipment, vessel slipping and repair facilities located in the Pacific island Parties; the purchase of equipment and supplies, including fuel supplies, from suppliers located in the Pacific Island Parties; and the employment of nationals of the Pacific Island Parties on board such vessels.

* * * * *

4. Section 300.34 is revised to read as follows:

§ 300.34 Reporting requirements.

(a) Holders of licenses issued under § 300.32 shall comply with the reporting requirements of this section with respect to the licensed vessels.

(b) Any information required to be recorded, or to be notified, communicated or reported pursuant to a requirement of these regulations, they Act, or the Treaty shall be true, complete and correct. Any change in circumstances that has the effect of rendering any of the information provided false, incomplete or misleading shall be communicated immediately to the Regional Administrator.

(c) The operator of any vessel licensed under § 300.32 must prepare and submit accurate, complete, and timely notifications, requests, and reports with respect to the licensed vessel, as described in paragraphs (c)(1) through (10) of this section.

(1) *Catch report forms.* A record of catch, effort and other information must be maintained on board the vessel, on catch report forms (also known as ''Regional Purse Seine Logsheets'', or RPLs) provided by the Regional Administrator. At the end of each day that the vessel is in the Licensing Area, all information specified on the form must, for that day, be recorded on the form. The completed catch report form must be mailed by registered airmail to the Administrator within 14 days of the vessel's next entry into port for the purpose of unloading its fish catch. A copy of the completed catch report form must also be submitted to, and received by, the Regional Administrator within 2 days of the vessel reaching port.

(2) *Unloading and transshipment logsheet forms.* At the completion of any unloading or transshipment of fish from the vessel, all the information specified on unloading and transshipment logsheet forms provided by the Regional Administrator must, for that unloading or transshipment, be recorded on such forms. A separate form must be completed for each fish processing destination to which the unloaded or transshipped fish are bound. The completed unloading and transshipment logsheet form or forms must be mailed by registered airmail to the Administrator within 14 days of the completion of the unloading or transshipment. The submitted form must be accompanied by a report or reports of the size breakdown of the catch as determined by the receiver or receivers of the fish, and such report must be signed by the receiver or receivers. A copy of the completed unloading and transshipment logsheet, including a copy of the accompanying report or reports of the size breakdown of the catch as determined by the receiver or receivers of the fish, must also be submitted to, and received by, the Regional Administrator within 2 days of the completion of the unloading or transshipment.

(3) *Port departure reports.* Before the vessel's departure from port for the purpose of beginning a fishing trip in the Licensing Area, a report must be submitted to the Administrator by telex, transmission via VMS unit, facsimile, or e-mail that includes the following information: report type (''LBEG''); Regional Register number; trip begin date; date and time (in UTC) of report; IRCS; port name; weight of catch on board (in metric tons) for each of skipjack tuna, yellowfin tuna, and all other species combined; intended action; and estimated date of departure. This information must be reported in the format provided by the Regional Administrator.

(4) *Entry into port for unloading reports.* At least 24 hours before the vessel's entry into port for the purpose of unloading fish from any trip involving fishing within the Licensing

Area, a report must be submitted to the Administrator by telex, transmission via VMS unit, facsimile, or e-mail that includes the following information: report type (''LFIN''); FFA Regional Register number; trip begin date; date and time (in UTC) of report; IRCS; port name; weight of catch on board (in metric tons) for each of skipjack tuna, yellowfin tuna, and all other species combined; intended action; and estimated date and time (in UTC) of entry into port. This information must be reported in the format provided by the Regional Administrator.

(5) *Intent to transship notification and request.* At least 48 hours before transshipping any or all of the fish on board the vessel, a notification must be submitted to the Administrator and a request must be submitted to the Pacific Island Party in whose jurisdiction the transshipment is requested to occur. The notification to the Administrator and the request to the Pacific Island Party may be identical. The notification and request must include the following information: name of vessel; IRCS; vessel position (latitude and longitude to nearest minute of arc); weight of catch on board the vessel (in metric tons) for each of skipjack tuna, yellowfin tuna, and all other species combined; and the date, time (in UTC), and location where such transshipment is requested to occur. The notification to the Administrator must be reported in the format provided by the Regional Administrator and submitted by telex, transmission by VMS unit, facsimile, or e-mail. The request to the Pacific Island Party must be reported in the format provided by the Regional Administrator and sent via the means and to the address provided by the Regional Administrator.

(6) *Zone entry and exit reports.* Each time the vessel enters or exits the waters under the jurisdiction of a Pacific Island Party, a report must be submitted to that Pacific Island Party that includes the following information: report type (''ZENT'' for entry or ''ZEXT'' for exit); FFA Regional Register number; trip begin date; date and time (in UTC) of the entry or exit; IRCS; vessel position (latitude and longitude to nearest minute of arc); weight of catch on board (in metric tons) for each of skipjack tuna, yellowfin tuna, and all other species combined; and intended action. This information must be reported in the format provided by the Regional Administrator and sent via the means and to the address provided by the Regional Administrator.

(7) *Weekly reports.* Each Wednesday while the vessel is within the waters under the jurisdiction of a Pacific Island Party, a report must be submitted to that Pacific Island Party that includes the following information: report type (''WEEK''); FFA Regional Register number; trip begin date; date and time (in UTC) of report; IRCS; vessel position (latitude and longitude to nearest minute of arc); weight of catch on board (in metric tons) for each of skipjack tuna, yellowfin tuna, and all other species combined; intended action; and whether or not there is a vessel observer on board (''Y'' or ''N''). This information must be reported in the format provided by the Regional Administrator and sent via the means and to the address provided by the Regional Administrator.

(8) *Port entry reports.* At least 24 hours before the vessel's entry into port of any Pacific Island Party, a report must be submitted to that Pacific Island Party that includes the following information: report type (''PENT''); FFA Regional Register number; trip begin date; date and time (in UTC) of report; IRCS; vessel position (latitude and longitude to nearest minute of arc); weight of catch on board (in metric tons) for each of skipjack tuna, yellowfin tuna, and all other species combined; estimated time (in UTC) of entry into port; port name; and intended action. This information must be reported in the format provided by the Regional Administrator and sent via the means and to the address provided by the Regional Administrator.

(9) *Transshipment reports.* Upon completion of transshipment of any or all of the fish on board the vessel, a report must be submitted to the Administrator and to the Pacific Island Party in whose jurisdiction the transshipment occurred. The report must include the following information: report type (''TRANS''); FFA Regional Register number; trip begin date; date and time (in UTC) of the transshipment; IRCS; vessel position at time of transshipment (latitude and longitude to nearest minute of arc); amount of fish transshipped (in metric tons) for each of skipjack tuna, yellowfin tuna, and all other species combined; name of vessel to which the fish were transshipped; and the destination of the transshipped fish. The report to the Administrator must be reported in the format provided by the Regional Administrator and submitted by telex, transmission by VMS unit, facsimile, or e-mail. The report to the Pacific Island Party must be reported in the format provided by the Regional Administrator and sent via the means and to the address provided by the Regional Administrator.

(10) *Other reports and notifications to Pacific Island Parties.* Reports and notifications must be submitted to the relevant Pacific Island Parties in each of the circumstances and in the manner described in the subparagraphs of this paragraph. Unless otherwise indicated in this paragraph, the reports must be prepared in the format provided by the Regional Administrator and sent via the means and to the address provided by the Regional Administrator.

(i) *Australia.*

(A) Each day while the vessel is within the Australian Fishing Zone, a report must be submitted that includes the following information: vessel position (latitude and longitude to nearest minute of arc); and the amount of catch made during the previous day, by species.

(B) At least 24 hours before entering the Australian Fishing Zone, a notification must be submitted that indicates an intent to enter the Australian Fishing Zone.

(ii) *Fiji.*

(A) Each day while the vessel is in Fiji fisheries waters, a report must be submitted that includes the following information: vessel name; IRCS; country of registration of the vessel; and vessel position at the time of the report (latitude and longitude to nearest minute of arc).

(B) Each week while the vessel is in Fiji fisheries waters, a report must be submitted that includes the amount of the catch made during the preceding week, by species.

(iii) *Kiribati.*

(A) At least 24 hours before entering a Closed Area under the jurisdiction of Kiribati, a notification must be submitted that includes the following information: vessel name; IRCS; vessel position at the time of the report (latitude and longitude to nearest minute of arc); the reason for entering the Closed Area; and the estimated time (in UTC) of entry into the Closed Area (latitude and longitude to nearest minute of arc).

(B) Immediately upon entry into or exit from a Closed Area under the jurisdiction of Kiribati, a report must be submitted that includes the following information: report type (''CAENT'' for entry or ''CAEXT'' for exit); the number of the vessel's license issued under § 300.32; IRCS; date and time (in UTC) of the report; vessel position (latitude and longitude to nearest minute of arc); amount of the catch on board the vessel, by species; and status of the boom (''up'' or ''down''), net (''deployed'' or ''stowed''), and skiff (''deployed'' or ''stowed'').

(C) At least 24 hours prior to fueling the vessel from a tanker in the area of jurisdiction of Kiribati, a report must be submitted that includes the following information: report type (''SBUNK''); the

number of the vessel's license issued under § 300.32; IRCS; trip start date; name of port from which trip started; amount of the catch on board the vessel, by species; estimated time of bunkering; estimated position of bunkering (latitude and longitude to nearest minute of arc); and name of tanker.

(D) After fueling the vessel from a tanker in the area of jurisdiction of Kiribati, but no later than 12:00 noon local time on the following day, a report must be submitted that includes the following information: report type (''FBUNK''); the number of the vessel's license issued under § 300.32; IRCS; start time of bunkering; end time of bunkering; amount of fuel received, in kiloliters; and name of tanker.

(iv) *New Zealand.*

(A) At least 24 hours before entering the exclusive economic zone of New Zealand, a notification must be submitted that includes the following information: name of vessel; IRCS; position of point of entry into the exclusive economic zone of New Zealand (latitude and longitude to nearest minute of arc); amount of catch on board the vessel, by species; and condition of the catch on board the vessel (''fresh'' or ''frozen'').

(B) For each day that the vessel is in the exclusive economic zone of New Zealand, a notification must be submitted no later than noon of the following day of the vessel's position (latitude and longitude to nearest minute of arc) at noon.

(C) For each week or portion thereof that the vessel is in the exclusive economic zone of New Zealand, a report that covers the period from 12:01 a.m. on Monday to 12:00 midnight on the following Sunday must be submitted and received by noon of the following Wednesday (local time). The report must include the amount of the catch taken in the exclusive economic zone of New Zealand during the reporting period.

(D) At least 10 days prior to an intended transshipment in an area under the jurisdiction of New Zealand, a notification must be submitted that includes the intended port, date, and time of transshipment.

(E) At least 24 hours prior to exiting the exclusive economic zone of New Zealand, a notification must be submitted that includes the following information: position of the intended point of exit (latitude and longitude to nearest minute of arc); the amount of catch on board the vessel, by species; and condition of the catch on board the vessel (''fresh'' or ''frozen'').

(v) *Solomon Islands.*

(A) At least 24 hours prior to entry into Solomon Islands Fisheries Limits, a report must be submitted that includes the following information: expected vessel position (latitude and longitude to nearest minute of arc) and expected date and time of entry.

(B) For each week or portion thereof that the vessel is in the exclusive economic zone of Solomon Islands, a report that covers the period from 12:01 a.m. on Monday to 12:00 midnight on the following Sunday must be submitted and received by noon of the following Tuesday (local time). The report must include the amount of the catch taken and the number of fishing days spent in the exclusive economic zone of Solomon Islands during the reporting period.

(vi) *Tonga.*

(A) Each day while the vessel is in the exclusive economic zone of Tonga, a report must be submitted that includes the vessel's position (latitude and longitude to nearest minute of arc).

(B) [Reserved]

(vii) *Tuvalu.*

(A) At least 24 hours prior to entering Tuvalu fishery limits, a report must be submitted that includes the following information: vessel name; IRCS; country of registration of the vessel; the number of the vessel's license issued under § 300.32; intended vessel position (latitude and longitude to nearest minute of arc) at entry; and amount of catch on board the vessel, by species.

(B) Every seventh day that the vessel is in Tuvalu fishery limits, a report must be submitted that includes vessel position (latitude and longitude to nearest minute of arc) and the total amount of catch on board the vessel.

(C) Immediately upon exit from Tuvalu fishery limits, a notification must be submitted that includes vessel position (latitude and longitude to nearest minute of arc) and the total amount of catch on board the vessel.

5. In § 300.38, paragraph (a)(4) is removed, paragraphs (a)(5) through (a)(11) are redesignated as paragraphs (a)(4) through (a)(10), redesignated paragraph (a)(10) is revised, and paragraphs (a)(11) through (a)(15) are added to read as follows:

§ 300.38 Prohibitions.

(a)* * *

(10) To transship fish on board a vessel that fished in the Licensing Area, except in accordance with the requirements of § 300.46.

(11) To fail to have installed, allow to be programmed, carry, or have operational a VMS unit while in the Treaty Area as specified in § 300.45(a).

(12) To fail to activate a VMS unit, to interrupt, interfere with, or impede the operation of a VMS unit, to tamper with, alter, damage, or disable a VMS unit, or to move or remove a VMS unit without prior notification as specified in § 300.45(f).

(13) In the event of a VMS unit failure or breakdown or interruption of automatic position reporting in the Treaty Area, to fail to submit manual position reports as specified in § 300.45(g).

(14) In the event of a VMS unit failure or breakdown or interruption of automatic position reporting in the Treaty Area and if directed by the Administrator or an authorized officer, to fail to stow fishing gear or take the vessel to a designated port as specified in § 300.45(g).

(15) To fail to repair or replace a VMS unit as specified in § 300.45(i).

* * * * *

6. In § 300.39, paragraph (a) is revised to read as follows:

§ 300.39 Exceptions.

(a) The prohibitions of § 300.38 and the licensing requirements of § 300.32 do not apply to fishing for albacore tuna by vessels using the trolling method or to fishing by vessels using the longline method in the high seas areas of the Treaty Area.

* * * * *

7. In § 300.42, paragraphs (a)(1)(i) and (b) are revised to read as follows:

§ 300.42 Findings leading to removal from fishing area.

(a) * * *

(1) * * *

(i) While fishing in the Licensing Area did not have a license issued under § 300.32 to fish in the Licensing Area, and that under the terms of the Treaty the fishing is not authorized to be conducted in the Licensing Area without such a license.

* * * * *

(b) Upon being advised by the Secretary of State that proper notification to Parties has been made by a Pacific Island Party that such Pacific Island Party is investigating an alleged infringement of the Treaty by a vessel in waters under the jurisdiction of that Pacific Island Party, the Secretary shall order the vessel to leave those waters until the Secretary of State notifies the Secretary that the order is no longer necessary.

* * * * *

8. A new § 300.45 is added to read as follows:

§ 300.45 Vessel Monitoring System.

(a) *Applicability.* Holders of vessel licenses issued under § 300.32 are

required, in order to have the licensed vessel in the Treaty Area, to:

(1) Have installed a VMS unit on board the licensed vessel;

(2) Allow the Administrator, its agent, or a person authorized by the Administrator to program the VMS unit to transmit position and related information to the Administrator;

(3) If directed by the Regional Administrator, allow NMFS, its agent, or a person authorized by NMFS to program the VMS unit to transmit position and related information to NMFS; and

(4) Carry and have operational the VMS unit at all times while in the Treaty Area, except as provided in paragraphs (f) and (g) of this section.

(b) *FFA Vessel Register.* Purse seine vessels must be in good standing on the FFA Vessel Register maintained by the Administrator in order to be licensed under the Treaty. FFA Vessel Register application forms may be obtained from the Regional Administrator or the Administrator or from the FFA website: www.ffa.int. Purse seine vessel owners or operators must submit completed FFA Vessel Register applications to the Regional Administrator for transmittal to the Administrator and pay fees for registration of their vessel(s) on the FFA Vessel Register annually. The vessel owner or operator may submit a completed FFA Vessel Register application form at any time, but the application must be received by the Regional Administrator at least seven days before the first day of the next licensing period to avoid the potential lapse of the registration and license between licensing periods.

(c) *VMS unit installation.* A VMS unit required under this section must be installed by a person authorized by the Administrator. A list of Administrator-authorized VMS unit installers may be obtained from the Regional Administrator or the Administrator.

(d) *Hardware and software specifications.* The VMS unit installed and carried on board a vessel to comply with the requirements of this section must consist of hardware and software that is approved by the Administrator and able to perform all functions required by the Administrator. The initial list of approved hardware and software will appear in the final rule for this action. A current list of approved hardware and software may be obtained from the Administrator.

(e) *Service activation.* Other than when in port or in a shipyard and having given proper notification to the Administrator as specified in paragraph (g) of this section, the owner or operator of a vessel licensed under § 300.32 must, when the vessel is in the Treaty Area:

(1) Activate the VMS unit on board the licensed vessel to transmit automatic position reports;

(2) Ensure that no person interrupts, interferes with, or impedes the operation of the VMS unit or tampers with, alters, damages, or disables the VMS unit, or attempts any of the same; and

(3) Ensure that no person moves or removes the VMS unit from the installed position without first notifying the Administrator by telephone, facsimile, or e-mail of such movement or removal.

(f) *Interruption of VMS unit signal.* When a vessel owner or operator is notified by the Administrator or an authorized officer that automatic position reports are not being received, or the vessel owner or operator is otherwise alerted or aware that transmission of automatic position reports has been interrupted, the vessel owner and operator must comply with the following:

(1) The vessel owner or operator must submit manual position reports that include vessel name, call sign, current position (latitude and longitude to the nearest minute), date, and time to the Administrator by telephone, facsimile, or e-mail at intervals of no greater than eight hours or a shorter interval if and as specified by the Administrator or an authorized officer. The reports must continue to be submitted until the Administrator has confirmed to the vessel owner or operator that the VMS unit is properly transmitting position reports. If the manual position reports cannot be made, the vessel operator or owner must notify the Administrator of such as soon as possible, by any means possible.

(2) If directed by the Administrator or an authorized officer, the vessel operator must immediately stow the fishing gear in the manner described in § 300.36, take the vessel directly to a port designated by the Administrator or authorized officer, and notify the Administrator by telephone, facsimile, or e-mail as soon as possible that the vessel is being taken to port with fishing gear stowed.

(g) *Shutdown of VMS unit while in port or in shipyard.* When a vessel is in port and not moving, the VMS unit may be shut down, provided that the Administrator has been notified by telephone, facsimile, or e-mail that the vessel is in port and of the intended shutdown, and only as long as manual position reports as described in paragraph (f)(1) of this section are submitted to the Administrator at intervals of no greater than 24 hours or a shorter interval if and as specified by the Administrator or an authorized officer. If the VMS unit is shut down while the vessel is in port, the vessel owner or operator must notify the Administrator by telephone, facsimile, or e-mail as soon as possible after the vessel's departure from port. When the vessel is in a shipyard, the VMS unit may be shut down and the submission of manual position reports is not required, provided that the Administrator has been notified by telephone, facsimile, or e-mail that the vessel is in the shipyard and of the intended VMS unit shutdown. If the VMS unit is shut down while the vessel is in a shipyard, the vessel owner or operator must notify the Administrator by telephone, facsimile, or e-mail as soon as possible after the vessel's departure from the shipyard.

(h) *VMS unit repair and replacement.* After a fishing trip during which interruption of automatic position reports has occurred, the vessel's owner or operator must have the VMS unit repaired or replaced prior to the vessel's next trip. If the VMS unit is replaced, the new VMS unit must be installed by an Administrator-authorized VMS unit installer, as specified in paragraph (c) of this section. In making such repairs or replacements, conformity with the current requirements must be met before the vessel may lawfully operate under the Treaty.

(i) *Access to data.* As a condition to obtaining a license, holders of vessel licenses issued under § 300.32 must allow the Regional Administrator, an authorized officer, the Administrator or an authorized party officer or designees access to the vessel's position data obtained from the VMS unit at the time of, or after, its transmission to the vendor or receiver.

9. A new § 300.46 is added to read as follows:

§ 300.46 Transshipping requirements.

(a) *Applicability.* This section applies to vessels licensed under § 300.32.

(b) Transshipping may only be done at the time and place authorized for transshipment by the Pacific Island Parties, following the notification and request requirements of § 300.34(c)(5).

(c) The operator and each member of the crew of a vessel from which any fish taken in the Licensing Area is transshipped must:

(1) Allow and assist any person identified as an officer of the Pacific Island Party to:

(i) Have full access to the vessel and any place where such fish is being transshipped and the use of facilities

and equipment that the officer may determine is necessary to carry out his or her duties;

(ii) Have full access to the bridge, fish on board and areas which may be used to hold, process, weigh and store fish;

(iii) Remove samples;

(iv) Have full access to the vessel's records, including its log and documentation, for the purpose of inspection and copying; and

(v) Gather any other information required to fully monitor the activity without interfering unduly with the lawful operation of the vessel; and

(2) Not assault, obstruct, resist, delay, refuse boarding to, intimidate, or interfere with any person identified as an officer of the Pacific Island Party in the performance of his or her duties.

(d) Transshipping at sea may only be done:

(1) In a designated area in accordance with such terms and conditions as may be agreed between the operator of the vessel and the Pacific Island Party in whose jurisdiction the transshipment is to take place;

(2) In accordance with the requirements of § 300.34; and

(3) If the catch is transshipped to a carrier vessel duly authorized in accordance with national laws.

[FR Doc. E6–13098 Filed 8–9–06; 8:45 am]

BILLING CODE 3510–22–S

Notices

Federal Register

Vol. 71, No. 154

Thursday, August 10, 2006

This section of the FEDERAL REGISTER contains documents other than rules or proposed rules that are applicable to the public. Notices of hearings and investigations, committee meetings, agency decisions and rulings, delegations of authority, filing of petitions and applications and agency statements of organization and functions are examples of documents appearing in this section.

DEPARTMENT OF AGRICULTURE

Forest Service

Plumas National Forest, California, Roadside Noxious Weed EIS

AGENCY: Forest Service, USDA.

ACTION: Notice of intent to prepare an environmental impact statement.

SUMMARY: The Plumas National Forest, in cooperation with Butte, Plumas and Sierra Counties, will prepare an Environmental Impact Statement (EIS) to treat noxious weeds on National Forest system lands under an integrated weed management approach. Actions proposed through this project focus on eradication or control of invasive species along roads over the next 10 years. The potentially affected areas includes 706 known sites that cover 310 acres and additional roadside sites (within 100 feet of roads) within the next ten years not previously identified. Treatment acres for new infestations would not exceed a total of 2,000 acres over the 10-year period. The range of acres treated under the proposed action over the ten-year period would be 310 to 2,310. Up to five different control tactics would be prescribed for each infested area depending on phenology of a particular species, proximity to water and other sensitive resources, and size of infestation. Of the 310 acres of current infestations: 4 Acres are being proposed to be treated by mechanical/hand control tactics, 34.5 acres with herbicides, 191.5 acres with a combination of mechanical and herbicide tactics, and 80 acres with a combination of mechanical, biocontrol and herbicide tactics. A variety of noxious weeds would be treated, including but not limited to Canada Thistle, Medusa head, Yellow star thistle, Scotch broom, Hariy whitetop, Dyer's Woad, Perennial Pepperweed, French broom, Spanish broom, and Spotted Knapweed.

DATES: Although comments will be accepted throughout any phase of this project, comments concerning the scope of the analysis would be helpful if received within 30 days of the date of publication of this notice in the **Federal Register**. The draft EIS is expected on March 2007 and the final EIS is expected July 2007.

ADDRESSES: Send written comments to Forest Supervisor James M. Peña, Plumas National Forest, P.O. Box 11500, Quincy, CA 95971. Fax: (530) 283–7746. Comments may be: (1) Mailed to responsible official; (2) hand delivered between the hours of 8 a.m.–4:30 p.m. weekdays Pacific Time; (3) faxed; or (4) electronically mailed to: *comments-pacificsouthwest-plumas@fs.fed.us.* Comments submitted electronically must be in Rich Text Format (.rtf).

FOR FURTHER INFORMATION CONTACT: George Garcia, Project Coordinator, Supervisor's Office, Plumas National Forest (see address above).

SUPPLEMENTARY INFORMATION:

Purpose and Need for Action

The purpose of this project is to implement an integrated weed management approach along roadsides within the Plumas National Forest to meet the following desired conditions: (1) Contain, control and eradicate known weed infestations along roadsides to less than 10% of the total existing infested acres over the next 10 years; (2) contain, control and eradicate new weed infestation along roadsides over the next 10 years in order to have no net increase in roadside infestations over existing conditions.

The goal of this project is to eradicate or contain current roadside weed populations while still small. This integrated weed management approach would help the Plumas National Forest meet the following resource needs: (1) Protection of Threatened, Endangered, Sensitive and Management Indicator species habitats (plants and animals); (2) protection of cultural properties (i.e., native grasses); (3) reduction of hazardous fuels that are created by invasive species (i.e., Broom spp.); (4) maintaining native forage and habitat for plants, terrestrial wildlife and aquatic species.

Proposed Action

The Plumas National Forest, in cooperation with Butte, Plumas and Sierra Counties, proposes to treat noxious weeds on National Forest system lands under an integrated weed management approach. Actions proposed through this project focus on eradication or control of invasive species along roads over the next 10 years. The potentially affected area includes 706 known sites that cover 310 acres and additional roadside sites (within 100 feet of roads) within the next ten years not previously identified. Treatment of new infestations or occurrences would be prioritized considering funding, state and county rankings and potential for ecological impact and rate of spread. Treatment acres for new infestations would not exceed a total of 2,000 acres over the 10-year period. The range of acres treated under the proposed action over the ten-year period would be 310 to 2,310. Ongoing inventories would confirm locations of specific noxious weeds and effectiveness of past treatments. The intent of the Proposed Action is to treat the current infestations, 310 acres, before they proliferate and invade new acres. Up to five different control tactics would be prescribed for each infested area depending on phenology of a particular species, proximity to water and other sensitive resources, and size of infestation. Of the 310 acres of current infestations: 4 acres are being proposed to be treated by mechanical/hand control tactics, 34.5 acres with herbicides, 191.5 acres with a combination of mechanical and herbicide tactics, and 80 acres with a combination of mechanical, biocontrol and herbicide tactics. A variety of noxious weeds would be treated, including but not limited to Canada Thistle, Medusa head, Yellow star thistle, Scotch broom, Hairy whitetop, Dyer's Woad, Perennial Pepperweed, French broom, Spanish broom, and Spotted Knapweed.

Lead and Cooperating Agencies

The Plumas National Forest is the lead federal agency for this project. County Agriculture Departments in Butte, Plumas and Sierra counties will assist the Forest in implementation of this action once a decision has been made.

Responsible Official

Plumas National Forest, Forest Supervisor James M. Peña, is the

Responsible Official for this EIS. James M. Peña, Forest Supervisor, P.O. Box 11500, Quincy, CA 95971.

Nature of Decision To Be Made

The Forest Supervisor will decide, based on the environmental analysis disclosed in this EIS, whether to implement the Proposed Action, another action alternative, or to implement the No Action Alternative in accordance with forest plan goals and desired future conditions. Indicator measures that will be considered in developing and evaluating the Proposed Action and Alternative include: (1) Effectiveness in treating noxious weed infestations, (2) potential adverse effects to human health and the environment, and (3) monetary costs and financial efficiency.

Scoping Process

The Plumas National Forest will be conducting public scoping on the proposed action. Public scoping will consist of a letter to the Forest's mailing list requesting public input and comments on the proposed action, and any relevant issues the public may have with regard to the integrated weed management approach outlined under the Roadside Noxious Weed proposal. No public meetings for this proposed action are currently scheduled.

Comment Requested

This notice of intent initiates the scoping process which guides the development of the environmental impact statement. Comments submitted to be specific to the proposed action and the treatments proposed.

Early Notice of Importance of Public Participation in Subsequent Environmental Review

A draft environmental impact statement will be prepared for comment. The comment period on the draft environmental impact statement will be 45 days from the date the Environmental Protection Agency publishes the notice of availability in the **Federal Register**.

The Forest Service believes, at this early stage, it is important to give reviewers notice of several court rulings related to public participation in the environmental review process. First, reviewers of the draft environmental impact statement must structure their participation in the environmental review of the proposal so that it is meaningful and alerts an agency to the reviewer's position and contentions. *Vermont Yankee Nuclear Power Corp.* v. *NRDC,* 435 U.S. 519, 553 (1978). Also, environmental objections that could be raised at the draft environmental impact statement stage but that are not raised until after completion of the final environmental impact statement may be waived or dismissed by the courts. *City of Angoon* v. *Hodel,* 803 F.2d 1016, 1022 (9th Cir. 1986) and *Wisconsin Heritages, Inc.* v. *Harris,* 490 F. Supp. 1334, 1338 (E.D. Wis. 1980). Because of these court rulings, it is very important that those interested in this proposed action participate by the close of the 45 day comment period so that substantive comments and objections are made available to the Forest Service at a time when it can meaningfully consider them and respond to them in the final environmental impact statement.

To assist the Forest Service in identifying and considering issues and concerns on the proposed action, comments on the draft environmental impact statement should be as specific as possible. It is also helpful if comments refer to specific pages or chapters of the draft statement. Comments may also address the adequacy of the draft environmental impact statement or the merits of the alternatives formulated and discussed in the statement. Reviewers may wish to refer to the council on Environmental Quality Regulations for implementing the procedural provisions of the National Environmental Policy Act at 40 CFR 1503.3 in addressing these points.

Comments received, including the names and addresses of those who comment, will be considered part of the public record on this proposal and will be available for public inspection.

(Authority: 40 CFR 1501.7 and 1508.22; Forest Service Handbook 1909.15, Section 21.)

Dated: August 3, 2006.

Terri Simon-Jackson,

Acting Forest Supervisor, Plumas National Forest.

[FR Doc. 06–6838 Filed 8–9–06; 8:45 am]

BILLING CODE 3410–11–M

DEPARTMENT OF AGRICULTURE

Forest Service

Eastern Idaho Resource Advisory Committee; Caribou-Targhee National Forest, Idaho Falls, ID

AGENCY: Forest Service, USDA.

ACTION: Notice of meeting.

SUMMARY: Pursuant to the authorities in the Federal Advisory Committee Act (Pub. L. 92–463) and under the Secure Rural Schools and Community Self-Determination Act of 2000 (Pub. L. 106–393) the Caribou-Targhee National Forests' Eastern Idaho Resource Advisory Committee will meet Thursday, September 21, 2006 in Idaho Falls for a business meeting. The meeting is open to the public.

DATES: The business meeting will be held on September 21, 2006 from 9 a.m. to 5 p.m.

ADDRESSES: The meeting location is the Caribou-Targhee National Forest Headquarters Office, 1405 Hollipark Drive, Idaho Falls, Idaho 83402.

FOR FURTHER INFORMATION CONTACT: Larry Timchak, Caribou-Targhee National Forest Supervisor and Designated Federal Officer, at (208) 524–7500.

SUPPLEMENTARY INFORMATION: The business meeting on September 21, 2006, begins at 9 a.m. at the Caribou-Targhee National Forest Headquarters Office, 1405 Hollipark Drive, Idaho Falls, Idaho. Agenda topics will include a vote on obligating project identification percentages for the upcoming year 2007 and a field trip to view completed projects from years past.

Dated: August 4, 2006.

Lawrence A. Timchak,

Caribou-Targhee Forest Supervisor.

[FR Doc. 06–6815 Filed 8–9–06; 8:45 am]

BILLING CODE 3410–11–M

DEPARTMENT OF COMMERCE

Economics and Statistics Administration

Establishment of the Measuring Innovation in the 21st Century Economy Advisory Committee and Recruitment of Members

AGENCY: Economics and Statistics Administration, Commerce.

ACTION: Notice of the Establishment of the Measuring Innovation in the 21st Century Economy Advisory Committee and Recruitment of Members from the Business and Academic Communities.

SUMMARY: The Secretary of Commerce is announcing the establishment of and recruitment for members of a Federal Advisory Committee. In accordance with the provisions of the Federal Advisory Committee Act, 5 U.S.C. App. 2, and the General Services Administration rule on the Federal Advisory Committee Management, 41 CFR part 101–6, the Secretary of Commerce has determined that the establishment of the Measuring Innovation in the 21st Century Economy Advisory Committee (the ''Committee''), is in the public interest in connection

with the performance of duties impose by the Department by law.

The Committee will advise the Secretary on new or improved measures of innovation in the economy in order to explain how innovation occurs in different sectors of the economy, how it is diffused across the economy, and how it impacts economic growth and productivity.

The Committee will consist of not more than fifteen members appointed by the Secretary of Commerce and composed of individuals from business and academia. Those from business will be knowledgeable about their industry sector and those from academia will be experts in their academic field. This notice provides membership criteria and application procedures.

The Committee will function solely as an advisory body, in compliance with the provisions of the Federal Advisory Committee Act. The Charter will be filed under the Federal Advisory Committee Act.

DATES: Applications for Committee membership will be received until the close of business September 29, 2006.

ADDRESSES: Interested individuals are strongly encouraged to send their applications for membership on the Committee by e-mail or facsimile to the address or number below. E-mail: *Anderson@esa.doc.gov*, facsimile: 202–482–0432. For those individuals without Internet or facsimile access, applications may be mailed to Economics and Statistics Administration, attn: Measuring Innovation Committee, Room 4855, U.S. Department of Commerce, 1401 Constitution Avenue, NW., Washington, DC 20230.

FOR FURTHER INFORMATION CONTACT: Elizabeth ''E.R.'' Anderson, Acting Deputy Under Secretary for Economic Affairs, ESA, U.S. Department of Commerce, 1401 Constitution Avenue, NW., Washington, DC 20230: telephone: 202–482–3727 or Jacque Mason at 202–482–5641, or at *http://www.esa.doc.gov.*

SUPPLEMENTARY INFORMATION:

Background

The U.S. economy is the fastest growing of the major industrialized countries. this growth is occurring as we shift to more knowledge-based and service-based industries. The high level of productivity that sustains this growth derives not only from innovations in the types of products and services we produce, but also from innovations in how goods and services are produced and brought to market. In a competitive global economy, policy makers need to understand the determinants of growth. Our data and analytic capabilities, therefore, need to be updated to keep pace with changes in the economy.

To help address these issues, the Secretary of Commerce is establishing the Measuring Innovation in the 21st Century Economy Advisory Committee to be composed of leaders from business and academia who will be charged with recommending new and improved statistics to help policy makers understand the innovation process.

Better metrics will help improve the understanding of how innovation occurs in different sectors of the economy, how it is diffused across the economy, and how it impacts economic growth and productivity. Definitions and methodological questions relevant for both government and private sector officials will be explored, therefore it is critical to have input from leaders in both the business and academic communities.

Membership

The Department of Commerce is seeking applicants from business and academia who are knowledgeable about the innovative process in their industry sector or experts in their academic field. The committee membership will reflect the diversity of the American economy, representing leaders of the business community from different industry sectors, and businesses of varying size. Committee members from the business community will serve in a representative capacity while those from the academic community will serve as Special Government Employees. Committee members will serve under the direction of the Secretary of Commerce. The committee will be composed of not more than 15 members appointed by the Secretary. No security clearances are required since Committee members will not have access to classified information.

Eligibility

Candidates will be self-identified; nominations from others are not required. Candidates from the business community must be at the CEO level or equivalent and be knowledgeable about the innovation process and measurement in their industry sector. Academic candidates must be experts in their field, preferably with an academic focus on innovation, particularly innovation metrics.

Application Procedure

Interested individuals should submit a letter stating their desire to serve on the Advisory Committee and attach a biographical statement.

Applications should be addressed to Elizabeth ''E.R.'' Anderson, Acting Deputy Under Secretary for Economic Affairs and should be sent by close of business September 29, 2006, to one of the addressed below:

E-mail: *Anderson@esa.doc.gov.*

Facsimile: 202–482–0432.

Mailing address: Economics and Statistics Administration, Measuring Innovation Committee, Room 4855, U.S. Department of Commerce, 1401 Constitution Avenue, NW., Washington, DC 20230.

Authority: Federal Advisory Committee Act: 5 U.S.C. App. 2 and General Services Administration Rule: 41 CFR part 101–6.

Elizabeth ''E.R.'' Anderson,

Acting Deputy Under Secretary for Economic Affairs.

[FR Doc. 06–6811 Filed 8–9–06; 8:45 am]

BILLING CODE 3510–06–M

DEPARTMENT OF COMMERCE

International Trade Administration Import Administration

[A–570–827]

Notice of Amended Final Results in Accordance With Court Decision: Antidumping Duty Administrative Review of Certain Cased Pencils from the People's Republic of China

AGENCY: Import Administration, International Trade Administration, Department of Commerce.

SUMMARY: On March 7, 2006, the United States Court of International Trade (CIT) affirmed the voluntary redetermination of the Department of Commerce (the Department) in the antidumping duty (AD) administrative review of certain cased pencils (pencils) from the People's Republic of China (PRC). *See China First Pencil Co. Ltd., et al. v. United States and Sanford Corporation, et al.*, 427 F. Supp 2d 1236 (CIT 2006), and the Department's Final Results of Voluntary Redetermination Pursuant to Court Order: China First Pencil Co., Ltd., *et al.* and Shandong Rongxin Import & Export Co., Ltd., v. United States and Sanford Corporation, *et al.* (dated December 20, 2004). As there is now a final and conclusive court decision in this case, the Department is amending the final results of this administrative review.

EFFECTIVE DATE: August 10, 2006.

FOR FURTHER INFORMATION CONTACT: Magd Zalok or Howard Smith at (202) 482–4162 or (202) 482–5193, respectively; AD/CVD Operations, Office 4, Import Administration, International Trade Administration,

U.S. Department of Commerce, 14th Street and Constitution Avenue, NW, Washington, DC 20230.

SUPPLEMENTARY INFORMATION:

Background

On May 21, 2004, the Department published in the **Federal Register** the final results of the 2002 antidumping duty administrative review of pencils from the PRC. *See Certain Cased Pencils From the People's Republic of China; Final Results and Partial Rescission of Antidumping Duty Administrative Review*, 69 FR 29266 (*2002 Final Results of Review*). In that review, the Department used Monthly Statistics of the Foreign Trade of India (MSFTI) for the period of review (POR) to value black and color pencil cores, material inputs used in the production of certain cased pencils.

During July 2004, the respondents in the 2002 antidumping duty review of pencils from the PRC filed complaints with the CIT contesting, among other things, the surrogate value assigned to pencil cores in the *2002 Final Results of Review*.[1] On September 1, 2004, the Department filed a motion with the CIT for a voluntary remand with respect to the pencil core issue. On September 20, 2004, the CIT remanded this case to the Department to conduct further proceedings concerning the valuation of pencil cores. On December 20, 2004, the Department issued its final results of voluntary redetermination.

In its redetermination, the Department concluded that it was better to value pencils cores using MSFTI data covering the immediately preceding POR (2001 MSFTI data), adjusted for inflation and valuation differences between black and color cores, rather than MSFTI data covering the instant POR. The Department reached this conclusion because, unlike the MSFTI data for the instant POR, the 2001 MSFTI data were consistent with price information obtained by the Department during the course of the redetermination. On March 7, 2006, the CIT affirmed the Department's voluntary redetermination, as well as its position on other issues arising from the *2002 Final Results of Review*. *See China First Pencil Co. Ltd., et al. v. United States and Sanford Corporation, et al.*, 427 F. Supp 2d 1236 (CIT 2006). Consistent with the decision of the United States Court of Appeals for the Federal Circuit (Federal Circuit) in *The Timken Company v. United States and China National Machinery and Equipment Import and Export Corporation*, 893 F. 2d 337 (Fed. Cir. 1990) (*Timken*), on April 3, 2006, the Department published a notice announcing that the CIT's decision was not in harmony with the Department's determination in the 2002 antidumping duty administrative review of pencils from the PRC. No party appealed the CIT's decision.

Amended Final Results of Review

As the litigation in this case has concluded, the Department is amending the *2002 Final Results of Review*. The dumping margins in the amended final results of review are as follows:

Exporter/Manufacturer	Margin (percent)
China First Pencil Company, Ltd./Three Star Stationery Industry Corp	16.50
Orient International Holding Shanghai Foreign Trade Co. Ltd	5.63
Shandong Rongxin Import & Export Company Ltd	4.21

The PRC–wide rate continues to be 114.90 percent.

Assessment

Consistent with the *2002 Final Results of Review*, for each of the above respondents we calculated exporter–specific assessment rates because there is no information on the record which identifies the importers of record. Specifically, for these respondents we calculated duty assessment rates for subject merchandise based on the ratio of the total amount of antidumping duties calculated for the examined sales to the total quantity of those sales. The Department will issue appropriate assessment instructions directly to U.S. Customs and Border Protection within 15 days of publication of this notice.

This notice is issued and published in accordance with sections 751(a)(1) and 777(i)(1) of the Tariff Act of 1930, as amended.

Dated: August 1, 2006.

David M. Spooner,

Assistant Secretary for Import Administration.

[FR Doc. E6–13040 Filed 8–9–06; 8:45 am]

BILLING CODE 3510–DS–S

[1] The respondents are China First Pencil Co., Ltd., Orient International Holding Shanghai Foreign Trade Co., Ltd., Three Star Stationery Industry Corp. (collectively ''CFP et al.'') and Shandong Rongxin Import & Export Co., Ltd. (Shandong).

DEPARTMENT OF COMMERCE

International Trade Administration

[A–570–849]

Cut–to-Length Carbon Steel Plate from the People's Republic of China: Notice of Rescission, in Part, and Preliminary Results of Antidumping Duty Administrative Review

AGENCY: Import Administration, International Trade Administration, Department of Commerce.

SUMMARY: In response to a request from Nucor Corporation, a domestic producer and interested party in this proceeding, the Department of Commerce (''Department'') is conducting an administrative review of cut–to-length carbon steel plate (''CTL plate'') from the People's Republic of China (''PRC'') for the period November 1, 2004, through October 31, 2005. We preliminarily determine that application of adverse facts available (''AFA'') is warranted with respect to the sole company participating in this administrative review, China Metallurgical Import & Export Liaoning Company (''Liaoning Company''). In addition, the Department is preliminarily rescinding the administrative review with respect to Angang New Steel Co., Ltd. and Angang Group Hong Kong Co., Limited (collectively ''Angang''), as its request for review was properly and timely withdrawn. If these preliminary results are adopted in our final results of administrative review, we will instruct U.S. Customs and Border Protection (''CBP'') to assess antidumping duties on all appropriate entries of subject merchandise. Interested parties are invited to comment on these preliminary results. We will issue the final results no later than 120 days from the date of publication of this notice.

EFFECTIVE DATE: August 10, 2006.

FOR FURTHER INFORMATION CONTACT: Juanita H. Chen, AD/CVD Operations, Office 8, Import Administration, International Trade Administration, U.S. Department of Commerce, 1401 Constitution Avenue, NW, Washington, DC 20230; telephone: 202–482–1904.

SUPPLEMENTARY INFORMATION:

Background

On November 1, 2005, the Department published a notice of opportunity to request an administrative review of the antidumping duty order on CTL plate from the PRC. *See Antidumping or Countervailing Duty Order, Finding, or Suspended Investigation; Opportunity to Request Administrative Review*, 70 FR 65883 (November 1, 2005). On November 30, 2005, domestic producer Nucor Corporation (''Nucor'') requested that the Department conduct an administrative review of Liaoning Company. Also on November 20, 2005, Chinese producer Angang requested that the Department conduct an administrative review on the antidumping duty order on CTL plate from the PRC. On December 22, 2005, the Department published a notice of the initiation of this administrative review of CTL plate from the PRC for the period November 1, 2004, through October 31, 2005. *See Initiation of Antidumping and Countervailing Duty Administrative Reviews and Request for Revocation in Part*, 70 FR 76024 (December 22, 2005).

Angang

On December 27, 2005, the Department issued an antidumping questionnaire to Angang. On February 8 and February 24, 2006, the Department received Angang's responses to Sections A, C and D of the questionnaire. On March 3, 2006, the Department received Angang's FOP reconciliation. On March 1 and March 14, 2006, Nucor submitted comments on Angang's Sections A, C and D responses.

On March 22, 2006, Angang requested an extension of time in which to withdraw its request for an administrative review, which the Department granted until March 29, 2006. On March 29, 2006, Angang timely withdrew its request for an administrative review. On April 10, 2006, Nucor submitted comments on Angang's withdrawal of its request for an administrative review. On May 15, 2006, the Department received a request from Angang to issue liquidation instructions regarding a shipment made during the POR.

Liaoning

On December 27, 2005, the Department issued an antidumping questionnaire to the legal representative for Liaoning Company in a prior segment of this case. On February 1, 2006, the Department sent a letter to the same legal representative concerning Liaoning Company's failure to respond to the Department's questionnaire, and extended the deadline for responding to February 8, 2006. On February 8, 2006, the legal representative submitted a letter to the Department stating that the firm no longer represented Liaoning Company, that the firm had contacted Liaoning Company, and that Liaoning Company wished to inform the Department it would not participate in this administrative review. On April 5, 2006, the Department sent a letter to the legal representative, inquiring whether the firm was authorized by Liaoning Company to act as its representative in notifying the Department that Liaoning Company intended not to participate in this administrative review. On April 17, 2006, the legal representative submitted a letter to the Department confirming that, as the firm no longer represented Liaoning Company, it was no longer authorized to notify the Department as to Liaoning Company's participation status in this administrative review.

On April 18, 2006, the Department issued an antidumping questionnaire directly to Liaoning Company specifying the following deadlines for responding to the various sections of the questionnaire: May 9, 2006 for Section A and May 19, 2006, for Sections C, D, and the Factors of Production and Sales Reconciliations. On May 15, 2006, the Department sent a letter to Liaoning Company concerning its failure to respond to the Department's Section A questionnaire by the due date of May 9, 2006, and extended the deadline for responding to the questionnaire, in its entirety, to May 19, 2006. On May 17, 2006, Liaoning Company requested an extension of time in which to respond to the Department's questionnaire, which the Department granted until May 26, 2006. On May 22, 2006, Liaoning Company submitted its questionnaire response, which the Department rejected on June 15, 2006, for numerous deficiencies, including failure to provide requested information, failure to follow filing procedures and requirements, and failure to serve copies of the submission on parties to the review. In the rejection letter, the Department also provided Liaoning Company with extensive guidance and instructions to assist Liaoning Company in revising its questionnaire response, and gave Liaoning Company until July 6, 2006, to submit a revised questionnaire response. On June 20, 2006, the Department returned the sole copy of the rejected questionnaire response to Liaoning Company. On June 27, 2006, Nucor requested that the Department not grant Liaoning Company any further extensions or opportunities to provide information past the July 6, 2006, deadline, and argued that if the deadline is missed or the revised questionnaire response rejected, the Department should terminate the review of Liaoning Company and apply AFA.

On July 5, 2006, Liaoning Company submitted its revised questionnaire response (''revised response'') to the Department. On July 13, 2006, Nucor filed a letter noting it had not received service of the revised response and requested that the Department terminate the review of Liaoning Company immediately, for its failure to participate. Liaoning Company's revised response, other than adding an index page and a proper case heading to the first page of the Sections A, C and D responses and the appendices, appeared to be identical to the submission rejected by the Department on June 15, 2006. As a result, on July 31, 2006, the Department rejected Liaoning Company's revised response in its entirety, for the same deficiencies under which the prior response was rejected.

Period of Review

The period of review (''POR'') is November 1, 2004, through October 31, 2005.

Scope of the Order

The products covered by this order include hot–rolled carbon steel universal mill plates (*i.e.*, flat–rolled products rolled on four faces or in a closed box pass, of a width exceeding 150 millimeters but not exceeding 1,250 millimeters and of a thickness of not less than 4 millimeters, not in coils and without patterns in relief), of rectangular shape, neither clad, plated nor coated with metal, whether or not painted, varnished, or coated with plastics or other nonmetallic substances; and certain hot–rolled carbon steel flat–rolled products in straight lengths, of rectangular shape, hot rolled, neither clad, plated, nor coated with metal, whether or not painted, varnished, or coated with plastics or other nonmetallic substances, 4.75 millimeters or more in thickness and of a width which exceeds 150 millimeters and measures at least twice the thickness, as currently classifiable in the Harmonized Tariff Schedule of the United States (''HTSUS'') under item numbers 7208.40.3030, 7208.40.3060, 7208.51.0030, 7208.51.0045, 7208.51.0060, 7208.52.0000, 7208.53.0000, 7208.90.0000, 7210.70.3000, 7210.90.9000, 7211.13.0000, 7211.14.0030, 7211.14.0045, 7211.90.0000, 7212.40.1000, 7212.40.5000, and 7212.50.0000. Included in this order are

flat–rolled products of non–rectangular cross-section where such cross-section is achieved subsequent to the rolling process (*i.e.*, products which have been ''worked after rolling'') for example, products which have been beveled or rounded at the edges. Excluded from this order is grade X–70 plate. Also excluded from this order is certain carbon cut–to-length steel plate with a maximum thickness of 80 mm in steel grades BS 7191, 355 EM, and 355 EMZ, as amended by Sable Offshore Energy Project specification XB MOO Y 15 0001, types 1 and 2. Although the HTSUS subheadings are provided for convenience and customs purposes, the written description of the scope is dispositive.

Partial Rescission of Review

The Department's regulations at 19 C.F.R. 351.213(d)(1) provide that the Department will rescind an administrative review if the party that requested the review withdraws its request for review within 90 days of the date of publication of the notice of initiation of the requested review, or withdraws its request at a later date if the Department determines that it is reasonable to extend the time limit for withdrawing the request. Nucor alleged in its April 10, 2006, submission that Angang withdrew its request for an administrative review to avoid responding to issues Nucor raised in its comments to Angang's questionnaire responses. However, Angang timely withdrew its request for administrative review within the extended time limit granted by the Department. Accordingly, regardless of the reasons for withdrawal, pursuant to the Department's regulations, the request for withdrawal was proper. As no other party requested that the Department conduct an administrative review of Angang, the Department is preliminarily rescinding the administrative review with respect to Angang, in accordance with 19 C.F.R. 351.213(d)(1).

Non–Market Economy Country Status

In every case conducted by the Department involving the PRC, the PRC has been treated as a non–market economy (''NME''') country. Pursuant to section 771(18)(C)(i) of the Tariff Act of 1930, as amended (''Act''), any determination that a foreign country is an NME country shall remain in effect until revoked by the administering authority. *See Freshwater Crawfish Tail Meat from the People's Republic of China: Notice of Final Results of Antidumping Duty Administrative Review*, 71 FR 7013 (February 10, 2006). None of the parties to this proceeding has contested such treatment.

Separate Rates Determination

Because the PRC is treated as an NME country for this review, there is a rebuttable presumption that all companies within the PRC are subject to government control and, thus, should be assessed a single antidumping duty rate.

It is the Department's policy to assign all exporters of the merchandise subject to review in an NME country a single rate unless an exporter can demonstrate an absence of government control, both in law (*de jure*) and in fact (*de facto*), with respect to exports. To establish whether an exporter is sufficiently independent of government control to be entitled to a separate company–specific rate, the Department analyzes the exporter following the criteria established in the *Final Determination of Sales at Less Than Fair Value: Sparklers from the People's Republic of China*, 56 FR 20588 (May 6, 1991); and *Notice of Final Determination of Sales at Less Than Fair Value: Silicon Carbide from the People's Republic of China*, 59 FR 22585 (May 2, 1994). The Department gave Liaoning Company numerous extensions of time and opportunities to submit a proper questionnaire response, and provided detailed guidance and instructions on how to prepare a questionnaire response. Despite these opportunities and assistance, Liaoning Company failed to follow the Department's instructions in submitting its questionnaire response. We find the information provided by Liaoning Company to be incomplete and unreliable, and are therefore, unable to perform a separate rates analysis. As a result, Liaoning Company has not demonstrated that it is entitled to a separate rate. Accordingly, we preliminarily find that Liaoning Company is part of the PRC–wide entity, as discussed, *infra*.

The PRC–Wide Rate and Adverse Facts Available

Section 776(a)(1) of the Act mandates that the Department shall, subject to section 782(d) of the Act, use facts otherwise available in reaching its determination if the necessary information is not available on the record of an antidumping proceeding. In addition, section 776(a)(2) of the Act states that the Department shall use facts otherwise available when an interested party or any other person: (A) withholds information requested by the Department; (B) fails to provide the requested information by the requested date or in the form and manner requested; (C) significantly impedes an antidumping proceeding; or (D) provides information that cannot be verified. In the instant review, the Department gave Liaoning Company multiple opportunities pursuant to section 782(d) of the Act to provide the requested information and remedy or explain the deficiencies pointed out in its submissions. Pursuant to section 782(e) of the Act, the Department must consider information submitted by an interested party if all of the following criteria are met: (1) The information is submitted by the deadline established for its submission; (2) the information can be verified; (3) the information is not so incomplete that it cannot serve as a reliable basis for reaching the applicable determination; (4) the interested party has demonstrated that it acted to the best of its ability in providing the information and meeting the requirements established by the Department with respect to the information; and (5) the information can be used without undue difficulties.

Liaoning Company has failed to meet any of these criteria. Liaoning Company missed the deadlines set for its questionnaire response submissions. Nevertheless, the Department gave Liaoning Company additional opportunities to submit a response. However, despite these additional opportunities, Liaoning Company failed to adequately correct its deficiencies and submitted a questionnaire response so incomplete that the information could not be used or verified in this administrative review. The original questionnaire response lacked proper case header information, did not include the proper number of copies, was not served upon interested parties, failed to include requested narrative detail and descriptions, provided little supporting paperwork and documentation, failed to include detailed product and sales information, declined to provide factors of production by deferring to data submitted by other companies in other proceedings and not on the record of this review, failed to include electronic U.S. sales and factors of production information, and failed to provide reconciliation worksheets, among other discrepancies. *See* Letter from Department of Commerce to Liaoning Company, dated June 15, 2006 (''Opportunity to Revise Letter'').

Finally, Liaoning Company failed to demonstrate that it acted to the best of its ability in providing the information, as Liaoning Company made no effort to follow the specific, detailed instructions provided by the Department in revising its questionnaire response. As

previously noted, although Liaoning Company's original response was severely deficient, the Department provided Liaoning Company an opportunity to revise its response and gave extensive instructions to assist Liaoning Company in revising its questionnaire response. *See* Opportunity to Revise Letter. The Department included copies of our regulations explaining our classification of information, and filing, service and certification requirements, the public and proprietary service lists, as well as the General Instructions to the questionnaire, with the Opportunity to Revise Letter. *Id.* at Attachments 1 through 4. The Department also requested that Liaoning Company contact the reviewing analyst if it had any questions regarding the revised response. *Id.* at 4. Liaoning Company failed to follow the Department's instructions and did not contact the reviewing analyst (or any Department official) regarding revising its questionnaire response. When Liaoning Company submitted its revised response, it had added an index page and followed the Department's request to properly include a case heading in the upper right hand corner (pursuant to instruction 1 of the Opportunity to Revise Letter) and to properly address the revised response (pursuant to instruction 2 of the Opportunity to Revise Letter). Other than these minor revisions, however, Liaoning Company's revised response appeared to be identical to the original submission rejected by the Department, with the same deficiency of information, and the same filing format and service deficiencies. *See* Letter from Department of Commerce to Liaoning Company, dated July 31, 2006. These deficiencies in the revised response, in view of the Department's detailed instructions and guidance, indicate that Liaoning Company did not act to the best of its ability in providing the requested information. Furthermore, as discussed above, it is appropriate to consider Liaoning Company part of the PRC–wide entity. Accordingly, pursuant to section 776(a) of the Act, the margin for the PRC–wide entity (including Liaoning Company) must be based on facts otherwise available.

In selecting from among the facts otherwise available, section 776(b) of the Act provides that if an interested party fails to cooperate by not acting to the best of its ability to comply with a request for information, the Department may use an inference that is adverse to the interests of the party. An adverse inference is appropriate ''to ensure that the party does not obtain a more favorable result by failing to cooperate than if it had cooperated fully.'' *See* Statement of Administrative Action (''SAA'') accompanying the Uruguay Round Agreements Act, H. Doc. No. 103–316, at 870 (1994). Section 776(b) of the Act states that, in applying AFA, such an adverse inference may include reliance on information derived from the petition, a final determination in an antidumping investigation or review, or any other information placed on the record. Because Liaoning Company failed to adequately respond to our questionnaire, and made no effort to follow the specific, detailed instructions provided by the Department in revising its questionnaire response, we preliminarily determine that the PRC–wide entity, including Liaoning Company, did not act to the best of its ability to comply with the Department's requests. Therefore, pursuant to section 776(b) of the Act, we are preliminarily basing the margin for the PRC–wide entity on AFA.

The Department's practice in reviews is to select, as an AFA rate, the highest rate determined for any respondent in any segment of the proceeding. *See, e.g., Notice of Final Results of Antidumping Duty Administrative Review and Final Partial Rescission: Certain Cut–to-Length Carbon Steel Plate from Romania*, 71 FR 7008, 7010–11 (February 10, 2006), and accompanying Issues and Decision Memorandum, at Issue 1; *Freshwater Crawfish Tail Meat from the People's Republic of China; Notice of Final Results of Antidumping Duty Administrative Review*, 68 FR 19504, 19506 (April 21, 2003) (citing *Freshwater Crawfish Tail Meat from the People's Republic of China; Notice of Final Results of Antidumping Duty Administrative Review, and Final Partial Rescission of Antidumping Duty Administrative Review*, 67 FR 19546 (April 22, 2002)). The courts have consistently upheld this practice. *See Ta Chen Stainless Steel Pipe, Inc. v. United States*, 298 F.3d 1330,1339 (Fed. Cir. 2002); *Sigma Corp. v. U.S.*, 117 F.3rd 1401, 1411 (Fed. Cir. 1997) (stating that the Department has a ''long standing practice of assigning to respondents who fail to cooperate with Commerce's investigation the highest margin calculated for any party in the less–than-fair–value investigation or in any administrative review''); *NSK Ltd. v. United States*, 346 F. Supp. 2d 1312, 1335 (CIT 2004) (upholding a 73.55 percent total AFA rate, the highest available dumping margin from a different respondent in a less–than-fair–value (''LTFV'') investigation); *Kompass Food Trading Int'l v. United States*, 24 CIT 678, 682–84 (2000) (upholding a 51.16 percent total AFA rate, the highest available dumping margin from a different, fully cooperative respondent); *Shanghai Taoen International Trading Co., Ltd. v. United States*, 360 F. Supp. 2d. 1339, 1347–48 (CIT 2005) (upholding a 223.01 percent total AFA rate, the highest available dumping margin from a different respondent in a previous administrative review).

The Department's practice, when selecting an AFA rate from among the possible sources of information, is to ensure that the margin is sufficiently adverse ''as to effectuate the statutory purposes of the adverse facts available rule to induce respondents to provide the Department with complete and accurate information in a timely manner.'' *See, e.g., Carbon and Certain Alloy Steel Wire Rod from Brazil: Notice of Final Determination of Sales at Less Than Fair Value and Final Negative Critical Circumstances*, 67 FR 55792 (August 30, 2002); *Static Random Access Memory Semiconductors from Taiwan: Final Determination of Sales at Less than Fair Value*, 63 FR 8909 (February 23, 1998).

In accordance with the Department's practice, we are preliminarily applying as AFA to the PRC–wide entity (including Liaoning Company) the rate of 128.59 percent, which is the rate currently applicable to the PRC–wide entity and is a rate calculated for another respondent in the LTFV investigation. *See Final Determination of Sales at Less Than Fair Value: Certain Cut–to-Length Carbon Steel Plate From the People's Republic of China*, 62 FR 61964, 61966 (November 20, 1997). This rate reflects the Department's practice of selecting the highest rate determined for any respondent in any segment of the proceeding as AFA and is sufficiently adverse to effectuate the purpose of AFA.

Corroboration of Secondary Information

Section 776(c) of the Act provides that when the Department relies on the facts otherwise available and uses ''secondary information,'' the Department shall, to the extent practicable, corroborate that information from independent sources reasonably at its disposal. Secondary information is defined in the SAA as ''{i}nformation derived from the petition that gave rise to the investigation or review, the final determination concerning subject merchandise, or any previous review under section 751 concerning the subject merchandise.'' *See* SAA at 870.

The SAA also states that to ''corroborate'' the Department must satisfy itself that the secondary information to be used has probative value. *Id.*

To corroborate secondary information, the Department will consider the reliability and relevance of the information used. In an administrative review, if the Department selects as AFA a calculated dumping margin from a prior segment of the proceeding, it is not necessary to question the reliability of that margin. *See Anhydrous Sodium Metasilicate from France: Preliminary Results of Antidumping Duty Administrative Review*, 68 FR 44283 (July 28, 2003) (unchanged in final). However, the Department will consider information reasonably at its disposal to determine whether that margin continues to have relevance. Where circumstances indicate that the selected margin is not appropriate as AFA, the Department will disregard the margin and determine an appropriate margin. *See, e.g., Fresh Cut Flowers from Mexico: Final Results of Antidumping Administrative Review*, 61 FR 6812 (February 22, 1996) (the Department disregarded the highest margin as AFA because the margin was based on another company's uncharacteristic business expense resulting in an unusually high margin). Similarly, the Department does not apply a margin that has been discredited. *D&L Supply Co. v. United States*, 113 F.3d 1220, 1221 (Fed. Cir. 1997) (the Department will not use a margin that has been judicially invalidated). None of these circumstances are present here. The information used in calculating this margin was based on data submitted by the respondents in the LTFV investigation, along with the most appropriate surrogate value information submitted by the parties and gathered by the Department in the LTFV investigation. Furthermore, the calculation of this margin was subject to comment from interested parties in the LTFV investigation proceeding. As the only source for calculated margins is administrative determinations, it is not necessary to question the reliability of a calculated dumping margin from a prior segment of the proceeding. As for the relevance of the rate selected, this rate is the rate currently applicable to the PRC–wide entity. Moreover, no information has been presented in the current review that calls into question the relevance of this information. As there is no information on the record of this review that demonstrates that this rate is not appropriately used as AFA, we determine that this rate has relevance.

Based on our analysis, we find that the margin of 128.59 percent is both reliable and relevant and, as a result, we determine that this rate has probative value. Accordingly, we determine that the calculated rate of 128.59 percent, which is the current PRC–wide rate, is in accordance with section 776(c) of the Act, which requires that secondary information be corroborated to the extent practicable (*i.e.*, that it have probative value). As a result, the Department determines that this rate is corroborated to the extent practicable for the purposes of this administrative review and may reasonably be applied to the PRC–wide entity, based on Liaoning Company's failure to cooperate to the best of its ability in this administrative review, as the total AFA rate. Consequently, we have assigned this AFA rate to exports of the subject merchandise from all companies subject to the PRC–wide rate, including Liaoning Company.

Preliminary Results of Review

As a result of our review, we preliminarily determine that a weighted–average dumping margin of 128.59 exists for the PRC–wide entity for the period November 1, 2004, through October 31, 2005. For Angang, we preliminarily rescind the administrative review.

Interested parties may submit written comments (''case briefs'') to be received by the Department no later than 30 days after the date of publication of these preliminary results. *See* 19 C.F.R. 351.309(c)(ii). Rebuttal comments (''rebuttal briefs''), which must be limited to issues raised in the case briefs, may be filed with the Department no later than 37 days after the date of publication of this notice. *See* 19 C.F.R. 351.309(d).

Any interested party may request a hearing within 30 days of publication of these preliminary results. *See* 19 C.F.R. 351.310(c). Any request for a hearing should contain the following information: 1) the party's name, address, and telephone number; 2) the number of participants; and 3) a list of the issues to be discussed. Any hearing, if requested, shall be held two working days after the deadline for submission of the rebuttal briefs. *See* 19 C.F.R. 351.310(d). Any hearing, if held, will be take place at the U.S. Department of Commerce, 1401 Constitution Avenue, NW, Washington, DC 20230. Oral presentations will be limited to issues raised in the briefs.

The Department will publish a notice of the final results of this administrative review, which will include the results of its analysis of issues raised by the parties, within 120 days of publication of these preliminary results. *See* 19 C.F.R. 351.213(h).

Assessment Rates

On May 15, 2006, the Department received a request from Angang to issue liquidation instructions clarifying that the sole shipment of merchandise exported jointly by Angang Group Hong Kong Co. Limited and Angang Group International Trade Corporation be liquidated at the current 30.68 percent cash deposit rate assigned to Anshan Iron & Steel Complex, Angang International Trade Corporation, and Sincerely Asia, Limited, from the original LTFV investigation and subsequent antidumping duty order. However, as Angang withdrew its request for review and the Department did not have an opportunity to conduct an analysis of Angang's shipments or relationship with Angang Group International Trade Corporation for the POR, the Department cannot issue specific liquidation instructions with regard to this shipment.

Upon issuance of the final results, the Department will determine, and CBP shall assess, antidumping duties on all appropriate entries. Because the Department is applying AFA to all exports of subject merchandise exported by the PRC–wide entity, including Liaoning Company, we will instruct CBP to liquidate entries according to the AFA *ad valorem* rate for all importers. The Department will issue appropriate assessment instructions directly to CBP within 15 days of publication of the final results of this administrative review.

Cash–Deposit Requirements

The following cash–deposit requirements will be effective upon publication of the final results of this administrative review for all shipments of CTL plate from the PRC entered, or withdrawn from warehouse, for consumption on or after the publication date, as provided for by section 751(a)(2)(C) of the Act: (1) for previously investigated or reviewed companies not subject to this review that have separate rates, the cash–deposit rate will continue to be the company–specific rate published in the most recent proceeding prior to this administrative review; (2) for all other PRC exporters, including Liaoning Company, the cash–deposit rate will be 128.59 percent; and (3) for all other non–PRC exporters, the cash–deposit rate will be the rate applicable to the PRC exporter that supplied that exporter. These cash

deposit requirements, when imposed, shall remain in effect until publication of the final results of the next administrative review.

Notification to Importers

This notice also serves as a preliminary reminder to importers of their responsibility under 19 C.F.R. 351.402(f) to file a certificate regarding the reimbursement of antidumping duties prior to liquidation of the relevant entries during this review period. Failure to comply with this requirement could result in the Secretary's presumption that reimbursement of antidumping duties occurred and the subsequent assessment of double antidumping duties.

We are issuing and publishing these preliminary results of administrative review in accordance with sections 751(a)(1) and 777(i)(1) of the Act, as well as 19 C.F.R. 351.221(b)(4) and 19 C.F.R. 351.213(d)(4).

Dated: August 2, 2006.

David M. Spooner,

Assistant Secretary for Import Administration.

[FR Doc. E6–13038 Filed 8–9–06; 8:45 am]

BILLING CODE 3510–DS–S

DEPARTMENT OF COMMERCE

International Trade Administration

U.S. Travel and Tourism Advisory Board: Conference Call Meeting of the U.S. Travel and Tourism Advisory Board

AGENCY: International Trade Administration, U.S. Department of Commerce.

ACTION: Notice of an open conference call meeting.

SUMMARY: The U.S. Travel and Tourism Advisory Board (Board) will hold an open conference call meeting to discuss topics related to the travel and tourism industry. The Board was established on October 1, 2003, and reconstituted October 1, 2005, to advise the Secretary of Commerce on matters relating to the travel and tourism industry.

DATES: August 23, 2006.

Time: TBD.

For the Conference Call-In Number and Further Information Contact: The U.S. Travel and Tourism Advisory Board Executive Secretariat, Room 4043, Washington, DC, 20230, telephone: 202–482–4501, e-mail: *Marc.Chittum@mail.doc.gov.*

FOR FURTHER INFORMATION CONTACT: J. Marc Chittum, U.S. Travel and Tourism Advisory Board, Room 4043, 1401 Constitution Avenue, NW., Washington, DC, 20230, telephone: 202–482–4501, e-mail: *Marc.Chittum@mail.doc.gov.*

Dated: August 4, 2006.

J. Marc Chittum,

Executive Secretary, U.S. Travel and Tourism Advisory Board.

[FR Doc. 06–6842 Filed 8–7–06; 3:34 pm]

BILLING CODE 3510–DR–P

DEPARTMENT OF COMMERCE

International Trade Administration, North American Free-Trade Agreement (NAFTA), Article 1904 Binational Panel Reviews

AGENCY: NAFTA Secretariat, United States Section, International Trade Administration, Department of Commerce.

ACTION: Notice of decision of panel.

SUMMARY: On July 28, 2006, the binational panel issued its decision in the review of the final determination made by the International Trade Administration, respecting Oil Country Tubular Goods from Mexico Final Results of Sunset Review of Antidumping Duty Order, Secretariat File No. USA–MEX–2001–1904–03. The binational panel remanded the redetermination on remand to the International Trade Administration. Copies of the panel decision are available from the U.S. Section of the NAFTA Secretariat.

FOR FURTHER INFORMATION CONTACT: Caratina L. Alston, United States Secretary, NAFTA Secretariat, Suite 2061, 14th and Constitution Avenue, Washington, DC 20230, (202) 482–5438.

SUPPLEMENTARY INFORMATION: Chapter 19 of the North American Free-Trade Agreement (''Agreement'') establishes a mechanism to replace domestic judicial review of the final determinations in antidumping and countervailing duty cases involving imports from a NAFTA country with review by independent binational panels. When a Request for Panel Review is filed, a panel is established to act in place of national courts to review expeditiously the final determination to determine whether it conforms with the antidumping or countervailing duty law of the country that made the determination.

Under Article 1904 of the Agreement, which came into force on January 1, 1994, the Government of the United States, the Government of Canada and the Government of Mexico established *Rules of Procedure for Article 1904 Binational Panel Reviews* (''Rules''). These Rules were published in the **Federal Register** on February 23, 1994 (59 FR 8686). The panel review in this matter has been conducted in accordance with these Rules.

Panel Decision: The Panel concluded and ordered the Department as follows:

The Department is directed to reconsider its likelihood determination and either issue a determination of no likelihood or give a reasoned analysis to support a conclusion that TAMSA's dumping is likely to continue or recur. In particular, the Department is directed to explain why TAMSA's high financial expense ratio is likely to recur considering the decrease in TAMSA's foreign currency denominated debt during the sunset review period as evidenced by the actual financial expense ratio established in the record of this proceeding.

The Department was directed to report the results of its remand decision within 20 days of the date of the opinion, or not later than August 17, 2006.

Dated: August 3, 2006.

Caratina L. Alston,

United States Secretary, NAFTA Secretariat.

[FR Doc. E6–13020 Filed 8–9–06; 8:45 am]

BILLING CODE 3510–GT–P

DEPARTMENT OF COMMERCE

Minority Business Development Agency

[Docket No: 000724217–6209–13]

Amendment to the Solicitation of Applications for the Minority Business Enterprise Center (MBEC) (Formerly Minority Business Development Center (MBDC))

AGENCY: Minority Business Development Agency, DOC.

ACTION: Notice.

SUMMARY: In accordance with Executive Order 11625 and 15 U.S.C. Section 1512, the Minority Business Development Agency (MBDA) is amending its solicitation, originally published on July 26, 2006, for competitive applications from organizations to operate a Minority Business Enterprise Center (MBEC) (formerly Minority Business Development Center). This amendment separates the Alabama/Mississippi MBEC into two geographic service areas, creating the Mississippi MBEC and the Alabama MBEC. The geographic service area for the Mississippi MBEC will be limited to the State of Mississippi only. All programmatic requirements, including funding levels, length of award and competition/selection processes, for the Mississippi MBEC

will be the same as that published for the Alabama/Mississippi MBEC in the July 26, 2006 solicitation.

The newly created Alabama MBEC geographic service area will service Hurricanes Katrina and/or Rita impacted minority-owned firms from the State of Alabama. The Alabama MBEC shall adhere to separate program requirements as outlined below (please refer to **SUPPLEMENTARY INFORMATION** section of this Notice) and a newly created Federal Funding Opportunity (FFO) Announcement.

This is not a grant program to help start a business. Applications submitted must be to operate a Minority Business Enterprise Center and to provide business consultation to eligible minority clients. Applications that do not meet these requirements will be rejected.

DATES: The closing date for receipt of applications for the Alabama MBEC is September 11, 2006. The closing date for receipt of applications for the modified Mississippi MBEC remains as September 20, 2006. Completed applications must be received by MBDA no later than 5 p.m. Eastern Daylight Savings Time at the address below for paper submission or at *http://www.Grants.gov* for electronic submission. The due date and time is the same for electronic submissions as it is for paper submissions. The date that applications will be deemed to have been submitted electronically shall be the date and time received at Grants.gov. Applicants should save and print the proof of submission they receive from Grants.gov. Applications received after the closing date and time will not be considered. Anticipated time for processing of the Alabama MBEC is approximately sixty days (60) days from the date of publication of this Announcement. MBDA anticipates that awards for the Alabama MBEC program will be made with a start date of October 1, 2006, whereas the award for the Mississippi MBEC will remain with a start date of January 1, 2007.

Pre-Application Conference: A pre-application teleconference will be held for the Alabama MBEC on August 25, 2006, in connection with this solicitation Announcement. The Mississippi pre-application teleconference will be held on August 17, 2006, in connection with the original Announcement. The pre-application conference information will be available on MBDA's Portal (MBDA Portal) at *http://www.mbda.gov.* Interested parties to the pre-application conference must register at MBDA's Portal at least 24 hours in advance of the event.

ADDRESSES:

(1)(a) Paper Submission—If Mailed: If the application is mailed/shipped overnight by the applicant or its representative, one (1) signed original plus two (2) copies of the application must be submitted. Completed application packages must be mailed to: Office of Business Development—MBEC Program, Office of Executive Secretariat, HCHB, Room 5063, Minority Business Development Agency, U.S. Department of Commerce, 14th Street and Constitution Avenue, NW., Washington, DC 20230.

U.S. Department of Commerce delivery policies for Federal Express, UPS, and DHL overnight services require the packages to be sent to the address above.

(1)(b) Paper Submission—If Hand-Delivered: If the application is hand-delivered by the applicant or his/her representative, one (1) signed original plus two (2) copies of the application must be delivered to: U.S. Department of Commerce, Minority Business Development Agency, Office of Business Development—MBEC Program (extension 1940), HCHB, Room 1874, Entrance #10, 15th Street, NW., Washington, DC, (Between Pennsylvania and Constitution Avenues).

U.S. Department of Commerce ''hand-delivery'' policies state that Federal Express, UPS, and DHL overnight services submitted to the address listed above (Entrance #10) cannot be accepted. These policies should be taken into consideration when utilizing their services. MBDA will not accept applications that are submitted by the deadline but rejected due to Departmental hand-delivery policies. The applicant must adhere to these policies in order for his/her application to receive consideration for award.

(2) Electronic Submission: Applicants are encouraged to submit their proposal electronically at *http://www.Grants.gov.* Electronic submissions should be made in accordance with the instructions available at Grants.gov (see *http://www.grants.gov/ForApplicants* for detailed information). MBDA strongly recommends that applicants not wait until the application deadline date to begin the application process through Grants.gov.

FOR FURTHER INFORMATION CONTACT: For further information, please visit MBDA's Minority Business Internet Portal at *http://www.mbda.gov.* Paper applications and Standard Forms may be obtained by contacting the MBDA National Enterprise Center (NEC) for the area where the Applicant is located (See Agency Contacts section) or visiting MBDA's Portal at *http://www.mbda.gov.* Standard Forms 424, 424A, 424B, and SF–LLL can also be obtained at *http://www.whitehouse.gov/omb/grants,* or *http://www.Grants.gov.* Forms CD–511 and CD–346 may be obtained at *http://www.doc.gov/forms.*

Responsibility for ensuring that applications are complete and received BY MBDA on time is the sole responsibility of the Applicant.

Agency Contacts:

1. Office of Business Development, 14th and Constitution Avenue, NW., Room 5073, Washington DC 20230.

Contact: Efrain Gonzalez, Program Manager at 202–482–1940.

2. Atlanta National Enterprise Center (ANEC) is located at 401 W. Peachtree Street, NW., Suite 1715, Atlanta, GA 30308–3516. This region covers the states of North Carolina, South Carolina, Georgia, Florida, Alabama, Mississippi, and Tennessee.

Contact John Iglehart Acting Regional Director, ANEC at 404–730–3300.

SUPPLEMENTARY INFORMATION:

Background

On July 26, 2006, MBDA published a solicitation for competitive applications from organizations to operate a Minority Business Enterprise Center (MBEC) (formerly Minority Business Development Center) (71 FR 42351). The July 26, 2006 solicitation listed the Alabama/Mississippi MBEC as a combined geographic service area.

This notice amends the July 26, 2006 solicitation by separating the Alabama/Mississippi MBEC into two geographic service areas, creating the Mississippi MBEC and the Alabama MBEC. The geographic service area for the Mississippi MBEC will be limited to the State of Mississippi. The geographic service area for the Alabama MBEC will be limited to the State of Alabama.

Geographic Service Areas

The MBEC will provide services in the following revised geographic areas:

MBEC name	Location of MBEC	Geographic service area
Alabama MBEC	Mobile, AL	State of Alabama.

MBEC name	Location of MBEC	Geographic service area
Mississippi MBEC (changed from Alabama/Mississippi MBEC).	Biloxi, MS	State of Mississippi (changed from states of Alabama and Mississippi).

Electronic Access

A link to the full text of the Federal Funding Opportunity (FFO) Announcements for the MBEC Program can be found at *http://www.Grants.gov* or by downloading at *http://www.mbda.gov* or by contacting the appropriate MBDA representative identified above. The FFO contains a full and complete description of the MBEC program requirements. In order to receive proper consideration, applicants must comply with all information and requirements contained in the FFO. Applicants will be able to access, download and submit electronic grant applications for the MBEC Program in this announcement at Grants.gov. MBDA strongly recommends that applicants not wait until the application deadline date to begin the application process through Grants.gov. The date that applications will be deemed to have been submitted electronically shall be the date and time received at Grants.gov. Applicants should save and print the proof of submission they receive from Grants.gov. Applications received after the closing date and time will not be considered.

Mississippi MBEC (Formerly Alabama/Mississippi MBEC)

This notice amends the July 26, 2006 solicitation by: (a) Changing the name of the Alabama/Mississippi MBEC to the Mississippi MBEC and (b) modifying the geographic service area from the States of Alabama/Mississippi to Mississippi only. All prior programmatic requirements, including funding levels, length of award and competition/selection process originally published on July 26 2006 (71 FR 42351–42356) remain the same.

Alabama MBEC

This amendment creates a new geographic service area, the Alabama MBEC, which will service Hurricanes Katrina and/or Rita impacted minority-owned firms from the State of Alabama. The information in this section outlines program general and specific requirements for the Alabama MBEC.

Funding Priorities—Alabama MBEC: Preference may be given to applications during the selection process which address the following MBDA funding priorities:

(a) Applicants who submit proposals that include work activities that exceed the minimum work requirements in this Announcement.

(b) Applicants who submit proposals that include performance goals that exceed the minimum performance goal requirements in this Announcement.

(c) Applicants who demonstrate an exceptional ability to identify and work towards the elimination of barriers which limit the access of minority businesses to markets and capital.

(d) Applicants who demonstrate an exceptional ability to identify and work with minority businesses seeking to obtain large-scale contracts and/or insertion into supply chains with institutional customers.

(e) Applicants that utilize fee for service models and those that demonstrate an exceptional ability to charge and collect fees from clients.

(f) Applicants who demonstrate special expertise in disaster assistance.

Funding Availability—Alabama MBEC: The total award period is one (1) year. Renewal of the award for two additional year options is at the sole discretion of the MBDA and the Department of Commerce. A total of approximately $200,000 is available in FY 2006 for Federal assistance under this program and it is anticipated that $200,000 may be available for each of the two option years in FY 2007 and FY 2008. Applicants are hereby given notice that funds have been appropriated for FY 2006 only. Funds for FY 2007 and 2008 have not been appropriated for this program.

Projects will be funded for no more than one year at a time. A project proposal accepted for funding in the first year is not required to re-compete in order to receive funding in optional years two (2) and three (3). Funding for the subsequent second and third year will be at the sole discretion of the MBDA and the Department of Commerce, and provided the MBEC achieved a ''Satisfactory'' performance rating for the first year and ''Good'' performance rating for the second year (as outlined below), the award recipient will be eligible for renewed funding. Failure to achieve the required minimum performance rating may be cause for project termination.

- Recommendations for second year funding are evaluated based on a ''Satisfactory'' mid-year performance rating and/or combination of mid-year and cumulative third quarter performance ''Satisfactory'' performance rating in Year 1.
- Recommendations for third year funding are evaluated based on a ''Good'' mid-year performance rating and/or combination of mid-year and cumulative third quarter performance ''Good'' performance rating in Year 2.

All funding periods are subject to the availability of funds to support the continuation of the project, and the Department of Commerce's and MBDA's priorities. Publication of this Notice does not obligate MBDA or the Department to award any specific cooperative agreement or to obligate all or any part of available funds.

Contingent upon the availability of Federal funds, the cost of performance for each of the program funding years is estimated in the chart below. The application must include a minimum cost share of 10% in non-Federal contributions.

Project Name	September 1, 2006 through August 31, 2007			Optional—Year 2 September 1, 2007 through August 31, 2008			Optional—Year 3 September 1, 2008 through August 31, 2009		
	Total cost ($)	Federal share ($)	Non-federal share ($) (10% min.)	Total cost ($)	Federal share ($)	Non-federal share ($) (10% min.)	Total cost ($)	Federal share ($)	Non-federal share ($) (10% min.)
Alabama MBEC ...	222,500	200,000	22,500	222,500	200,000	22,500	222,500	200,000	22,500

Authority: Executive Order 11625 and 15 U.S.C. 1512.

Catalog of Federal Domestic Assistance (CFDA): 11.800 Minority Business Enterprise Center Program (formerly Minority Business Development Center (MBDC) Program).

Eligibility: For-profit entities (including sole-proprietorships, partnerships, and corporations), and non-profit organizations, state and local government entities, American Indian Tribes, and educational institutions are eligible to operate MBECs. Applicants receiving three (3) consecutive funding award cycles (beginning 2007 through 2015) will not be eligible to receive an award in 2016 (and thereafter).

Program Description—Alabama MBEC: In accordance with Executive Order 11625 and 15 U.S.C. Section 1512, the Minority Business Development Agency (MBDA) is soliciting applications from organizations to operate a Minority Business Enterprise Center (MBEC) (formerly Minority Business Development Center). The MBEC Program requires the Alabama MBEC staff to provide standardized business assistance services to minority firms impacted by Hurricanes Katrina and/or Rita or those with $500,000 or more in annual revenues and/or ''rapid-growth potential'' minority businesses (''Strategic Growth Initiative or ''SGI'' firms) directly; to develop a network of strategic partnerships; and to provide strategic business consulting. These requirements will be used to generate increased results with respect to financing and contracts awarded to minority-owned firms and thus, are a key component of this program.

The Alabama MBEC Program will concentrate on serving firms impacted by Hurricanes Katrina and/or Rita or SGI firms capable of generating significant employment and long-term economic growth. The MBEC program shall continue to leverage telecommunications technology, including the Internet, and a variety of online/computer-based resources to dramatically increase the level of service that the MBEC can provide to minority-owned firms.

The MBEC program incorporates an entrepreneurial approach to building market stability and improving the quality of services delivered. This strategy expands the reach of the MBEC by requiring the project operator to develop and build upon strategic alliances with public and private sector partners, as a means of serving clients within the project's geographic service area.

In addition, MBDA will establish specialized business consulting training programs to support the MBEC client assistance services. These MBEC training programs are designed specifically to foster growth assistance to its clients. The MBEC will also encourage increased collaboration and client/non-client referrals among the MBDA-sponsored networks. This will provide a comprehensive approach to serving the emerging sector of the minority business community.

The MBEC will operate through the use of trained professional business consultants who will assist minority entrepreneurs through direct client engagements. Entrepreneurs eligible for assistance under the MBEC Program are African Americans, Puerto Ricans, Spanish-speaking Americans, Aleuts, Asian and Pacific Islander Americans, Asian Indians, Native Americans, Eskimos and Hasidic Jews. As part of its strategy for continuous improvement, the MBEC shall expand its delivery capacity to *all* minority firms (as defined in the FFO). MBDA wants to ensure that MBEC clients are receiving a consistent level of service throughout its funded network. To that end, MBDA will require MBEC consultants to attend training course(s) designed to achieve standardized services and quality expectations. Further programmatic information can be found in the FFO.

Match Requirements—Alabama MBEC: Cost sharing of at least 10% is required. Cost sharing is the portion of the project cost not borne by the Federal Government. Applicants must meet this requirement through one or more of the following means or a combination thereof: (1) Client fees; (2) cash contributions; (3) non-cash applicant contributions; and/or (4) third party in-kind contributions. Bonus points will be awarded for cost sharing exceeding 10 percent that is applied on the following scale: more than 10%-less than 15%—1 point; 15% or more-less than 20%—2 points; 20% or more-less than 25%—3 points; 25% or more-less than 30%—4 points; and, 30% or more—5 points. Applicants must provide a detailed explanation of how the cost-sharing requirement will be met. The MBEC may charge client fees for services rendered. Client fees, if charged, shall be used towards meeting cost share requirements. Client fees applied directly to the award's cost sharing requirement must be used in furtherance of the program objectives.

Evaluation Criteria—Alabama MBEC: Proposals will be evaluated and applicants will be selected based on the following criteria. An application must receive at least 70% of the total points available for *each* evaluation criterion, in order for the application to be considered for funding. The maximum total of points that can be earned is 105 including bonus points for related non-federal cost sharing, except when oral presentations are made by applicants. If oral presentations are made (see paragraph 5 below), the maximum total of points that can be earned is 115.

1. *Applicant Capability (40 points).* The applicant's proposal will be evaluated with respect to the applicant firm's experience and expertise in providing the work requirements listed. Specifically, the proposals will be evaluated as follows:

- *MBE Community*—experience in and knowledge of the minority business sector and strategies for enhancing its growth and expansion; particular emphasis shall be on expanding Hurricane Katrina and/or Rita impacted minority companies and/or SGI firms in the State of Alabama(4 points);
- *Business Consulting*—experience in and knowledge of business consulting of Hurricane Katrina and/or Rita impacted minority companies and/or SGI firms in the State of Alabama (5 points);
- *Financing*—experience in and knowledge of the preparation and formulation of successful financial transactions (5 points);
- *Procurements and Contracting*—experience in and knowledge of the public and private sector contracting opportunities for minority businesses, as well as demonstrated expertise in assisting MBEs into supply chains (5 points);
- *Financing Networks*—resources and professional relationships within the corporate, banking and investment community that may be beneficial to minority-owned firms (5 points);
- *Establishment of a Self-Sustainable Service Model*—summary plan to establish a self-sustainable model for continued services to the MBE community beyond the MBDA funding cycle (3 points);
- *MBE Advocacy*—experience and expertise in advocating on behalf of minority businesses, both as to specific transactions in which a minority business seeks to engage, and as to broad market advocacy for the benefit of the minority community at large (3 points); and
- *Key Staff*—assessment of the qualifications, experience and proposed role of staff who will operate the MBEC. In particular, an assessment will be made to determine whether proposed key staff possesses the expertise in utilizing information systems and the ability to successfully deliver services (10 points).

2. *Resources (20 points).* The applicant's proposal will be evaluated according to the following criteria:

• *Resources*—discuss those resources (not included as part of the cost-sharing arrangement) that will be used, including (but not limited to) existing prior and/or current data lists that will serve in fostering immediate success for the MBEC (8 points);

• *Location*—Applicant must indicate if it shall establish a location for the Center that is separate and apart from any existing offices in the geographic service area (2 points);

• *Partners*—discuss how you plan to establish and maintain the network of five (5) Strategic Partners and how these partners will support the MBEC to meet its performance objectives (5 points); and

• *Equipment*—discuss how you plan to accomplish the computer hardware and software requirements (5 points).

3. *Techniques and Methodologies (20 points).* The applicant's proposal will be evaluated as follows:

• *Performance Measures*—relate each performance measure to the financial, information and market resources available in the geographic service area to the applicant (including existing client list) and how the goals will be met (marketing plan). Specific attention should be placed on matching performance outcomes (as described under ''Geographic Service Areas and Performance Goals'' of the FFO) with client service (billable) hours. The applicant should consider existing market conditions and its strategy to achieve the goal (10 points);

• *Plan of action*—provide specific detail on how the applicant will start operations. The MBEC shall have thirty (30) days to become fully operational after an award is made. Fully operational means that all staff are hired, all signs are up, all items of furniture and equipment are in place and operational, all necessary forms are developed (*e.g.*, client engagement letters, other standard correspondence, etc.), and the center is ready to open its doors to the public (5 points); and

• *Work Requirement Execution Plan*—The applicant will be evaluated on how effectively and efficiently all staff time will be used to achieve the work requirements (5 points).

4. *Proposed Budget and Supporting Budget Narrative (20 points).* The applicant's proposal will be evaluated on the following sub-criteria:

• Reasonableness, allowability and allocability of costs. All of the proposed expenditures must be discussed and the budget line item narrative must match the proposed budget. Fringe benefits and other percentage item calculations must match the proposed line item on the budget. (5 points);

• Proposed cost sharing of 10% is required. The non-Federal share must be adequately documented, including, if client fees will be charged, how they will be used to meet the cost-share (5 points); and

• Performance Based Budget. Discuss how the budget is related to the accomplishment of the work requirements and the performance measures. Provide a budget narrative that clearly shows the connections (10 points).

Proposals with cost sharing which exceeds 10% will be awarded bonus points on the following scale: more than 10% –less than 15%—1 point; 15% or more–less than 20%—2 points; 20% or more–less than 25%—3 points; 25% or more–less than 30%—4 points; and 30% or more—5 points.

5. *Oral Presentation—Optional (10 points).* Oral presentations are held only when determined by MBDA. When the merit review by the panel results in applications scoring 70% or more of the available points for each criterion, MBDA may request all those applicants to develop and provide an oral presentation. This presentation will be used to establish a final evaluation and rating.

The applicant's presentation will be evaluated on the following sub-criteria:

(a) The extent to which the presentation demonstrates how the applicant will effectively and efficiently assist MBDA in the accomplishment of its mission (2 points);

(b) The extent to which the presentation demonstrates business operating priorities designed to manage a successful MBEC (2 points);

(c) The extent to which the presentation demonstrates a management philosophy that achieves an effective balance between micromanagement and complete autonomy for its Project Director (2 points);

(d) The extent to which the presentation demonstrates robust search criteria for the identification of a Project Director (1 point);

(e) The extent to which the presentation demonstrates effective employee recruitment and retention policies and procedures (1 point); and

(f) The extent to which the presentation demonstrates a competitive and innovative approach to exceeding performance requirements (2 points).

Review and Selection Process—Alabama MBEC:

1. *Initial Screening.* Prior to the formal paneling process, each application will receive an initial screening to ensure that all required forms, signatures and documentation are present.

2. *Panel Review.* Each application will receive an independent, objective review by a panel qualified to evaluate the applications submitted. MBDA anticipates that the review panel will be made up of at least three independent reviewers (all Federal employees) who will review all applications based on the above evaluation criteria. Each reviewer will evaluate and provide a score for each proposal. In order for an application to be considered for funding, it shall need to achieve 70% of the available points for each criterion. Failure to achieve these results will automatically deem the application as unsuccessful.

3. *Oral Presentation—Optional.* When the merit review by the panel results in applications scoring 70% or more of the available points for each criterion, MBDA may request all those applicants to develop and provide an oral presentation. The applicants may receive up to 10 additional points based on the presentation and content presented.

If a formal presentation is requested, the applicants will receive a formal communication (via standard mail, e-mail or fax) from MBDA indicating the time and date for the presentation. In person presentations are not mandatory but are encouraged; telephonic presentations are acceptable. Applicants will be asked to submit a power point presentation (or equivalent) to MBDA that addresses the oral presentation criteria (see above, Evaluation Criteria, item 5. Oral Presentation—Optional). This presentation must be submitted at least 24 hours before the scheduled date and time of the presentation. The presentation will be made to the National Director (or his/her designee) and/or up to three senior MBDA staff who did not serve on the merit evaluation panel. The oral panel members may ask follow-up questions after the presentation. MBDA will provide the teleconference dial-in number and pass code. Each finalist will present to MBDA staff only; other applicants are not permitted to listen (and/or watch).

All costs pertaining to this presentation shall be borne by the applicant. MBEC award funds may not be used as a reimbursement for this presentation. MBDA will *not* accept any requests or petitions for reimbursement.

The oral panel members shall score each presentation in accordance with the oral presentation criteria. An average score shall be compiled and

added to the original score of the panel review.

4. *Final Recommendation.* The National Director of MBDA makes the final recommendation to the Department of Commerce Grants Officer regarding the funding of applications, taking into account the selection criteria as outlined in this Announcement and the following:

(a) The evaluations and rankings of the independent review panel and the evaluation(s) of the oral presentations, if applicable;

(b) Funding priorities. The National Director (or his/her designee) reserves the right to conduct a site visit (subject to the availability of funding) to applicant organizations receiving at least 70% of the total points available for each evaluation criterion, in order to make a better assessment of the organization's capability to achieve the funding priorities; and,

(c) The availability of funding.

Intergovernmental Review: Applications under this program are not subject to Executive Order 12372, ''Intergovernmental Review of Federal Programs.''

Limitation of Liability—Alabama MBEC: Applicants are hereby given notice that funds have been appropriated for this program for Fiscal Year 2006 only. In no event will MBDA or the Department of Commerce be responsible for proposal preparation costs if this program fails to receive funding in FY 2007 or 2008 or is cancelled because of other agency priorities. Publication of this announcement does not oblige MBDA or the Department of Commerce to award any specific project or to obligate any available funds.

Universal Identifier: Applicants should be aware that they will be required to provide a Dun and Bradstreet Data Universal Numbering system (DUNS) number during the application process. See the June 27, 2003 (68 FR 38402) **Federal Register** notice for additional information. Organizations can receive a DUNS number at no cost by calling the dedicated toll-free DUNS Number request line at 1–866–705–5711 or by accessing the Grants.gov Web site at *http://www.Grants.gov.*

Department of Commerce Pre-Award Notification Requirements for Grants and Cooperative Agreements: The Department of Commerce Pre-Award Notification Requirements for Grants and Cooperative Agreements contained in the **Federal Register** notice of December 30, 2004 (69 FR 78389) are applicable to this solicitation.

Paperwork Reduction Act: This document contains collection-of-information requirements subject to the Paperwork Reduction Act (PRA). The use of standard forms 424, 424A, 424B, SF–LLL, and CD–346 have been approved by OMB under the respective control numbers 0348–0043, 0348–0044, 0348–0040, 0348–0046, and 0605–0001.

Notwithstanding any other provisions of law, no person is required to respond to, nor shall any person be subject to a penalty for failure to comply with a collection of information subject to the Paperwork Reduction Act unless that collection displays a currently valid OMB control Number.

Executive Order 12866: This notice has been determined to be not significant for purposes of E.O. 12866.

Administrative Procedure Act/ Regulatory Flexibility Act: Prior notice for an opportunity for public comment are not required by the Administrative Procedure Act for rules concerning public property, loans, grant, benefits and contracts (5 U.S.C. 533(a)(2)). Because notice and opportunity for comment are not required pursuant to 5 U.S.C. 533 or any other law, the analytical requirements of the regulatory flexibility Act (5 U.S.C 601 *et seq.*) are inapplicable. Therefore, a regulatory flexibility analysis is not required and has not been prepared.

Dated: August 10, 2006.

Ronald J. Marin,

Financial Management Officer, Minority Business Development Agency.

[FR Doc. 06–6820 Filed 8–9–06; 8:45 am]

BILLING CODE 3510–21–P

DEPARTMENT OF COMMERCE

National Oceanic and Atmospheric Administration

[I.D. 080206D]

Marine Mammals; File No. 1097–1859

AGENCY: National Marine Fisheries Service (NMFS), National Oceanic and Atmospheric Administration (NOAA), Commerce.

ACTION: Notice; receipt of application.

SUMMARY: Notice is hereby given that Coral World (V.I.), Inc., 6450 Estate Smith Bay, St. Thomas, Virgin Islands, 00802–1800, (Gertrude J. Prior, Responsible Party) has applied in due form for a permit to import four South American (Patagonian) sea lions (*Otaria flavescens*) for public display.

DATES: Written, telefaxed, or e-mail comments must be received on or before September 11, 2006.

ADDRESSES: The application and related documents are available for review upon written request or by appointment in the following office(s):

Permits, Conservation and Education Division, Office of Protected Resources, NMFS, 1315 East-West Highway, Room 13705, Silver Spring, MD 20910; phone (301)713–2289; fax (301)427–2521; and

Southeast Region, NMFS, 263 13th Avenue South, Saint Petersburg, Florida 33701; phone (727)824–5312; fax (727)824–5309.

Written comments or requests for a public hearing on this application should be mailed to the Chief, Permits, Conservation and Education Division, F/PR1, Office of Protected Resources, NMFS, 1315 East-West Highway, Room 13705, Silver Spring, MD 20910. Those individuals requesting a hearing should set forth the specific reasons why a hearing on this particular request would be appropriate.

Comments may also be submitted by facsimile at (301)427–2521, provided the facsimile is confirmed by hard copy submitted by mail and postmarked no later than the closing date of the comment period.

Comments may also be submitted by e-mail. The mailbox address for providing e-mail comments is NMFS.Pr1Comments@noaa.gov. Include in the subject line of the e-mail comment the following document identifier: File No. 1097–1859.

FOR FURTHER INFORMATION CONTACT: Kate Swails or Jennifer Skidmore, (301)713–2289.

SUPPLEMENTARY INFORMATION: The subject permit is requested under the authority of the Marine Mammal Protection Act of 1972, as amended (MMPA; 16 U.S.C. 1361 *et seq.*) and the regulations governing the taking and importing of marine mammals (50 CFR part 216).

The applicant requests authorization to import four male South American sea lions from International Sea Lion Search and Rescue, Koh Samui, Thailand to Coral World Ocean Park in St. Thomas, Virgin Islands. The applicant requests this import for the purposes of public display. The receiving facility is aware of the public display criteria for holding marine mammals for public display and their obligation to demonstrate said criteria prior to acquiring these animals. Coral World's programs are open to the public on regularly scheduled basis with access that is not limited or restricted other than by charging for an admission fee. Coral World offers an educational program based on professionally accepted standards and is in the process of receiving an

Exhibitor's License, issued by the U.S. Department of Agriculture under the Animal Welfare Act (7 U.S.C. §§ 2131 - 59). The applicant has completed the license inspection and paid the licensing fee.

In addition to determining whether the applicant meets the three public display criteria, NMFS must determine whether the applicant has demonstrated that the proposed activity is humane and does not represent any unnecessary risks to the health and welfare of marine mammals; that the proposed activity by itself, or in combination with other activities, will not likely have a significant adverse impact on the species or stock; and that the applicant's expertise, facilities and resources are adequate to accomplish successfully the objectives and activities stated in the application.

Concurrent with the publication of this notice in the **Federal Register**, NMFS is forwarding copies of this application to the Marine Mammal Commission and its Committee of Scientific Advisors.

Dated: August 4, 2006.

P. Michael Payne,

Chief, Permits, Conservation and Education Division, Office of Protected Resources, National Marine Fisheries Service.

[FR Doc. E6–13100 Filed 8–9–06; 8:45 am]

BILLING CODE 3510–22–S

DEPARTMENT OF COMMERCE

National Oceanic and Atmospheric Administration

Notice of Public Meeting

SUMMARY: The Advisory Committee on Commercial Remote Sensing (ACCRES) will meet September 12, 2006.

Date And Time: The meeting is scheduled as follows: September 12, 2006, 9 a.m.–3 p.m. The first part of this meeting will be closed to the public. The public portion of the meeting will begin at 1:30 p.m.

ADDRESSES: The meeting will be held in the Horizon Ballroom of the Ronald Reagan Building and International Trade Center Washington, DC. The Reagan Building is located at 1300 Pennsylvania Avenue, NW., Washington, DC 20004. While open to the public, seating capacity may be limited.

SUPPLEMENTARY INFORMATION: As required by section 10(a) (2) of the Federal Advisory Committee Act, 5 U.S.C. App. (1982), notice is hereby given of the meeting of ACCRES. ACCRES was established by the Secretary of Commerce (Secretary) on May 21, 2002, to advise the Secretary through the Under Secretary of Commerce for Oceans and Atmosphere on long- and short-range strategies for the licensing of commercial remote sensing satellite systems.

Matters To Be Considered

The first part of the meeting will be closed to the public pursuant to section 10(d) of the Federal Advisory Committee Act, 5 U.S.C. App. 2, as amended by section 5(c) of the Government in Sunshine Act, Public Law 94–409 and in accordance with Section 552b(c)(1) of Title 5, United States Code. Accordingly, portions of this meeting which involve the ongoing review and implementation of the April 2003 U.S. Commercial Remote Sensing Space Policy and related national security and foreign policy considerations for NOAA's licensing decisions may be closed to the public. These briefings are likely to disclose matters that are specifically authorized under criteria established by Executive Order 12958 to be kept secret in the interest of national defense or foreign policy and are in fact properly classified pursuant to such Executive Order.

All other portions of the meeting will be open to the public. During the open portion of the meeting, the Committee will receive a presentation on remote sensing laws and policies of foreign countries and updates of NOAA's licensing activities. The committee will also receive public comments on its activities.

Special Accommodations

These meetings are physically accessible to people with disabilities. Requests for special accommodations may be directed to ACCRES, NOAA/NESDIS International and Interagency Affairs Office, 1335 East-West Highway, Room 7311, Silver Spring, Maryland 20910.

Additional Information and Public Comments

Any member of the public wishing further information concerning the meeting or who wishes to submit oral or written comments should contact Kay Weston, Designated Federal Officer for ACCRES, NOAA/NESDIS International and Interagency Affairs Office, 1335 East-West Highway, Room 7311, Silver Spring, Maryland 20910. Copies of the draft meeting agenda can be obtained from Tahara Moreno at (301) 713–2024 ext. 202, fax (301) 713–2032, or e-mail *Tahara.Moreno@noaa.gov.*

The ACCRES expects that public statements presented at its meetings will not be repetitive of previously-submitted oral or written statements. In general, each individual or group making an oral presentation may be limited to a total time of five minutes. Written comments (please provide at least 13 copies) received in the NOAA/NESDIS International and Interagency Affairs Office on or before September 5, 2006, will be provided to Committee members in advance of the meeting. Comments received too close to the meeting date will normally be provided to Committee members at the meeting.

FOR FURTHER INFORMATION CONTACT: Kay Weston, NOAA/NESDIS International and Interagency Affairs, 1335 East West Highway, Room 7313, Silver Spring, Maryland 20910; telephone (301) 713–2024 x205, fax (301) 713–2032, e-mail *Kay.Weston@noaa.gov*, or Tahara Moreno at telephone (301) 713–2024 x202, e-mail *Tahara.Moreno@noaa.gov*.

Mary E. Kicza,

Deputy Assistant Administrator for Satellite and Information Services.

[FR Doc. E6–13021 Filed 8–9–06; 8:45 am]

BILLING CODE 3510–HR–P

COORDINATING COUNCIL ON JUVENILE JUSTICE AND DELINQUENCY PREVENTION

[OJP (OJJDP) Docket No. 1455]

Meeting of the Coordinating Council on Juvenile Justice and Delinquency Prevention

AGENCY: Coordinating Council on Juvenile Justice and Delinquency Prevention.

ACTION: Notice of meeting.

SUMMARY: The Coordinating Council on Juvenile Justice and Delinquency Prevention (Council) is announcing the September 8, 2006, meeting of the Council.

DATE: Friday, September 8, 2006, 9:15 a.m.—12:30 p.m.

ADDRESSES: The meeting will take place at the Department of Justice, Office of Justice Programs, 810 Seventh Street, NW., 3rd floor, Washington, DC 20531.

FOR FURTHER INFORMATION CONTACT: Robin Delany-Shabazz, Designated Federal Official, by telephone at 202–307–9963 [**Note:** This is not a toll-free telephone number.], or by e-mail at *Robin.Delany-Shabazz@usdoj.gov.*

SUPPLEMENTARY INFORMATION: The Coordinating Council on Juvenile Justice and Delinquency Prevention, established pursuant to Section 3(2)A of the Federal Advisory Committee Act (5 U.S.C. App. 2) will meet to carry out its advisory functions under Section 206 of

the Juvenile Justice and Delinquency Prevention Act of 2002, 42 U.S.C. 5601, *et seq.* Documents such as meeting announcements, agendas, minutes, and interim and final reports will be available on the Council's Web page at *http://www.JuvenileCouncil.gov.* (You may also verify the status of the meeting at that Web address.)

Although designated agency representatives may attend, the Council membership is composed of the Attorney General (Chair), the Secretary of Health and Human Services, the Secretary of Labor, the Secretary of Education, the Secretary of Housing and Urban Development, the Administrator of the Office of Juvenile Justice and Delinquency Prevention (Vice Chair), the Director of the Office of National Drug Control Policy, the Chief Executive Officer of the Corporation for National and Community Service, and the Assistant Secretary for Homeland Security, Immigrations and Customs Enforcement. Nine additional members are appointed by the Speaker of the House of Representatives, the Senate Majority Leader, and the President of the United States.

Meeting Agenda

The agenda for this meeting will include: (a) discussion of research concerning juveniles and youth who are disadvantaged or at-risk; (b) discussion of opportunities to leverage resources and coordinate research; (c) legislative, program and agency updates; and (d) other business and announcements.

Registration

For security purposes, members of the public who wish to attend the meeting must pre-register online at *http://www.juvenilecouncil.gov/* or by fax to: 703–738–9149 [Daryel Dunston at 703–738–9175 or e-mail, *ddunston@edjassociates.com* for questions], no later than Wednesday, August 30, 2006. [**Note:** these are not toll-free telephone numbers.] Additional identification documents may be required. Space is limited.

Note: Photo identification will be required for admission to the meeting.

Written Comments

Interested parties may submit written comments by Wednesday, August 30, 2006, to Robin Delany-Shabazz, Designated Federal Official for the Coordinating Council on Juvenile Justice and Delinquency Prevention, at *Robin.Delany-Shabazz@usdoj.gov.* The Coordinating Council on Juvenile Justice and Delinquency Prevention expects that the public statements presented will not repeat previously submitted statements. Written questions and comments from the public may be invited at this meeting.

Dated: August 7, 2006.

Michael Costigan,

Chief of Staff, Office of Juvenile Justice and Delinquency Prevention.

[FR Doc. E6–13104 Filed 8–9–06; 8:45 am]

BILLING CODE 4410–18–P

DEPARTMENT OF DEFENSE

Office of the Secretary

[DOD–2006–OS–0177]

Manual for Courts-Martial; Proposed Amendments

AGENCY: Joint Service Committee on Military Justice (JSC), DoD.

ACTION: Notice of Proposed Amendments to the Manual for Courts-Martial, United States (2005 ed.) and Notice of Public Meeting.

SUMMARY: The Department of Defense is considering recommending changes to the *Manual for Courts-Martial, United States* (2005 ed.) (MCM). The proposed changes constitute the 2005 annual review (delayed) required by the MCM and DoD Directive 5500.17, ''Role and Responsibilities of the Joint Service Committee (JSC) on Military Justice,'' May 3, 2003. The proposed changes concern the rules of procedure and evidence and the punitive articles applicable in trials by courts-martial. These proposed changes have not been coordinated within the Department of Defense under DoD Directive 5500.1, ''Preparation and Processing of Legislation, Executive Orders, Proclamations, and Reports and Comments Thereon,'' May 21, 1964, and do not constitute the official position of the Department of Defense, the Military Departments, or any other Government agency.

This notice also sets forth the date, time and location for the public meeting of the JSC to discuss the proposed changes.

This notice is provided in accordance with DoD Directive 5500.17, ''Role and Responsibilities of the Joint Service Committee (JSC) on Military Justice,'' May 3, 2003. This notice is intended only to improve the internal management of the Federal Government. It is not intended to create any right or benefit, substantive or procedural, enforceable at law by any party against the United States, its agencies, its officers, or any person.

In accordance with paragraph III.B.4 of the Internal Organization and Operating Procedures of the JSC, the committee also invites members of the public to suggest changes to the Manual for Courts-Martial in accordance with the described format.

DATES: Comments on the proposed changes must be received no later than October 1, 2006 to be assured consideration by the JSC. A public meeting will be held on September 18, 2006 at 11:00 a.m. in the 14th Floor Conference Room, 1777 N. Kent St., Rosslyn, VA 22209–2194.

ADDRESSES: Comments on the proposed changes should be sent to Lieutenant Colonel L. Peter Yob, Office of The Judge Advocate General, Criminal Law Division, 1777 N. Kent St., Rosslyn, VA 22209–2194.

FOR FURTHER INFORMATION CONTACT: Lieutenant Colonel L. Peter Yob, Executive Secretary, Joint Service Committee on Military Justice, Office of the Judge Advocate General, Office of The Judge Advocate General, Criminal Law Division, 1777 N. Kent St., Rosslyn, VA 22209–2194, (703) 588–6744, e-mail *Louis.Yob@hqda.army.mil.*

SUPPLEMENTARY INFORMATION: The proposed amendments to the MCM are as follows (material in bold and/or underlined is new):

Part II of the Manual for Courts-Martial, United States, is amended as follows:

(a) RCM 916(b) is amended to read:

(b) *Burden of proof.*

(1) General rule. Except as listed below in paragraphs (2), (3), and (4), the prosecution shall have the burden of proving beyond a reasonable doubt that the defense did not exist.

(2) *Lack of mental responsibility.* The accused has the burden of proving the defense of lack of mental responsibility by clear and convincing evidence.

(3) *Mistake of fact as to age.* In the defense of mistake of fact as to age as described in *Part IV, para. 45a(o)(2) in a prosecution of a sexual offense with a child under Article 120*, the accused has the burden of proving mistake of fact as to age by a preponderance of the evidence. After the defense meets its burden, the prosecution shall have the burden of proving beyond a reasonable doubt that the defense did not exist.

(4) *Mistake of fact as to consent.* In the defense of mistake of fact as to consent in *Article 120(a), rape, Article 120(c), aggravated sexual assault, Article 120(e), aggravated sexual contact,* and Article 120(h), abusive sexual contact, the accused has the burden of proving mistake of fact as to consent by a preponderance of the evidence. After the defense meets its burden, the prosecution shall have the

burden of proving beyond a reasonable doubt that the defense did not exist.

(b) RCM 916(j)(2) is amended to read:

(2) *Child Sexual Offenses.* It is a defense to a prosecution for *Article 120 (d), aggravated sexual assault of a child, Article 120(f), aggravated sexual abuse of a child, Article 120(i), abusive sexual contact with a child*, or Article 120 (j), indecent liberty with a child that, at the time of the *offense, the child* was at least 12 years of age, and the accused reasonably believed the person was at least 16 years of age. The accused must prove this defense by a preponderance of the evidence.

(c) RCM 916(j) is amended by inserting new paragraph RCM 916(j)(3) after the Discussion section to RCM 916(j)(2):

(j)(3) Sexual offenses. It is an affirmative defense to a prosecution for Article 120(a), rape, Article 120(c), aggravated sexual assault, Article 120(e), aggravated sexual contact, and Article 120(h), abusive sexual contact that the accused held, as a result of ignorance or mistake, an incorrect belief that the other person engaging in the sexual conduct consented. The ignorance or mistake must have existed in the mind of the accused and must have been reasonable under all the circumstances. To be reasonable the ignorance or mistake must have been based on information, or lack of it, which would indicate to a reasonable person that the other person consented. Additionally, the ignorance or mistake cannot be based on the negligent failure to discover the true facts. Negligence is the absence of due care. Due care is what a reasonably careful person would do under the same or similar circumstances. The accused's state of intoxication, if any, at the time of the offense is not relevant to mistake of fact. A mistaken belief that the other person consented must be that which is a reasonably careful, ordinary, prudent, sober adult would have had under the circumstances at the time of the offense.

(d) RCM 920(e)(5)(D) is amended to read:

(D) The burden of proof to establish the guilt of the accused is upon the Government. [When the issue of lack of mental responsibility is raised, add: The burden of proving the defense of lack of mental responsibility by clear and convincing evidence is upon the accused. When the issue of mistake of fact *under RCM 916 (j)(2) or (j)(3)* is raised, add: *The accused has the burden of proving the defense of mistake of fact as to consent or age by a preponderance of the evidence.*]

(e) RCM 1004(c)(7)(B) is amended to read as follows:

(B) The murder was committed: While the accused was engaged in the commission or attempted commission of any robbery, *rape, rape of a child, aggravated sexual assault, aggravated sexual assault of a child, aggravated sexual contact, aggravated sexual abuse of a child, aggravated sexual contact with a child,* aggravated arson, sodomy, burglary, kidnapping, mutiny, sedition, or privacy of an aircraft or vessel; or while the accused was engaged in the commission or attempted commission of any offense involving the wrongful distribution, manufacture, or introduction or possession, with intent to distribute, of a controlled substance; or, while the accused was engaged in flight or attempted flight after the commission or attempted commission of any such offense.

(f) RCM 1004(c)(8) is amended to read:

(8) That only in the case of a violation of Article 118(4), the accused was the actual perpetrator of the killing or was a principal whose participation in the burglary, sodomy, *rape, rape of a child, aggravated sexual assault, aggravated sexual assault of a child, aggravated sexual contact, aggravated sexual abuse of a child, aggravated sexual contact with a child,* robbery, or aggravated arson was major and who manifested a reckless indifference for human life.

(g) RCM 1102(b)(2), is amended to read:

(2) *Article 39(a) sessions.* An Article 39(a) session under this rule may be called, *upon motion of either party or sua sponte by the military judge*, for the purpose of inquiring into, and, when appropriate, resolving any matter which arises after trial and which substantially affects the legal sufficiency of any findings of guilty or the sentence. The military judge may also call an Article 39(a) session, upon motion of either party or sua sponte, to reconsider any trial ruling that substantially affects the legal sufficiency of any findings of guilty or the sentence. *The military judge may, sua sponte, at any time prior to authentication of the record of trial, enter a finding of not guilty of one or more offenses charged, or may enter a finding of not guilty of a part of a specification as long as a lesser offense charged is alleged in the portion of the specification. Prior to entering such a finding or findings, the military judge shall give each party an opportunity to be heard on the matter in a post-trial Article 39(a) session.*

(h) R.C.M. 1102(d) is amended by deleting the last phrase of the second sentence which reads:

", except that no proceeding in revision may be held when any part of the sentence has been ordered executed."

(i) R.C.M. 1102(e)(2) is amended by inserting the following sentence after the last sentence in RCM 1102(e)(2):

"Prior to the military judge, sua sponte, entering a finding of not guilty of one or more offenses charged or entering a finding of not guilty of a part of a specification as long as a lesser offense charged is alleged in the portion of the specification, the military judge shall give each party an opportunity to be heard on the matter."

(j) R.C.M. 1204(c)(2) is amended by inserting the following at the end of the sentence:

(c) *Action of decision by the Court of Appeals for the Armed Forces.*

(2) *Sentence requiring approval of the President.* If the Court of Appeals for the Armed Forces has affirmed a sentence which must be approved by the President before it may be executed, the Judge Advocate General shall transmit the record of trial, the decision of the Court of Criminal Appeals, the decision of the Court of Appeals for the Armed Forces, and the recommendation of the Judge Advocate General to the Secretary concerned, *who, at his discretion, may provide a recommendation. All courts-martial transmitted by the Secretary concerned, other than the Secretary of the Department of Homeland Security with respect to the Coast Guard when it is not operating as a service in the Navy, for the action of the President shall be transmitted to the Secretary of Defense, who, at his discretion, may provide a recommendation.*

Part III of the Manual for Courts-Martial, United States, is amended as follows:

(a) MRE 412 is amended as follows:

Rule 412. *Sex offense cases:* Relevance of *alleged* victim's sexual behavior or sexual predisposition.

(a) *Evidence generally inadmissible.* The following evidence is not admissible in any proceeding involving an alleged sexual offense except as provided in subdivisions (b) and (c):

(1) Evidence offered to prove that any alleged victim engaged in other sexual behavior.

(2) Evidence offered to prove any alleged victim's sexual predisposition.

(b) *Exceptions.*

(1) In a proceeding, the following evidence is admissible, if otherwise admissible under these rules:

(A) Evidence of specific instances of sexual behavior by the alleged victim offered to prove that a person other than the accused was the source of semen, injury, or other physical evidence;

(B) Evidence of specific instances of sexual behavior by the alleged victim

with respect to the person accused of the sexual misconduct offered by the accused to prove consent or by the prosecution; and

(C) Evidence the exclusion of which would violate the constitutional rights of the accused.

(c) *Procedure to determine admissibility.*

(1) A party intending to offer evidence under subdivision (b) must—

(A) File a written motion at least 5 days prior to entry of pleas specifically describing the evidence and stating the purpose for which it is offered unless the military judge, for good cause shown, requires a different time for filing or permits filing during trial; and

(B) Serve the motion on the opposing party and the military judge and notify the alleged victim or, when appropriate, the alleged victim's guardian or representative.

(2) Before admitting evidence under this rule, the military judge must conduct a hearing, which shall be closed. At this hearing, the parties may call witnesses, including the alleged victim, and offer relevant evidence. The alleged victim must be afforded a reasonable opportunity to attend and be heard. In a case before a court-martial composed of a military judge and members, the military judge shall conduct the hearing outside the presence of the members pursuant to Article 39(a). The motion, related papers, and the record of the hearing must be sealed and remain under seal unless the court orders otherwise.

(3) If the military judge determines on the basis of the hearing described in paragraph (2) of this subdivision that the evidence that the accused seeks to offer is relevant *for a purpose under subdivision (b)* and that the probative value of such evidence outweighs the danger of unfair prejudice *to the alleged victim's privacy,* such evidence shall be admissible under this rule to the extent an order made by the military judge specifies evidence that may be offered and areas with respect to which the alleged victim may be examined or cross-examined. *Such evidence is still subject to challenge under MRE 403.*

(d) For purposes of this rule, the term ''sexual *offense'' includes any sexual misconduct punishable under the Uniform Code of Military Justice, federal law or state law.* ''Sexual behavior'' includes any sexual behavior not encompassed by the alleged offense. The term ''sexual predisposition'' refers to an alleged victim's mode of dress, speech, or lifestyle that does not directly refer to sexual activities or thoughts but that may have a sexual connotation for the factfinder.

(a) M.R.E. 503(b) is amended by renumbering the existing subsection (2) to subsection (3) and inserting the following new subsection (2) after current M.R.E. 503(b)(1) to read as follows:

''(2) A ''clergyman's assistant'' is a person employed by or assigned to assist a clergyman in his capacity as a spiritual advisor.''

(b) *M.R.E. 504 is amended by inserting new subsection (d) after M.R.E. 504(c):*

''(d) Definitions. As used in this rule:

(1) The term ''a child of either'' includes not only a biological child, adopted child, or ward of one of the spouses but also includes a child who is under the permanent or temporary physical custody of one of the spouses, regardless of the existence of a legal parent-child relationship. For purposes of this rule only, a child is: (i) an individual under the age of eighteen; or (ii) an individual with a mental handicap who functions under the age of eighteen.''

(2) The term ''temporary physical custody'' includes instances where a parent entrusts his or her child with another. There is no minimum amount of time necessary to establish temporary physical custody nor must there be a written agreement. Rather, the focus is on the parent's agreement with another for assuming parental responsibility for the child. For example, temporary physical custody may include instances where a parent entrusts another with the care of their child for recurring care or during absences due to temporary duty or deployments.

Part IV of the Manual for Courts-Martial, United States, is amended as follows:

(a) Paragraph 43, Article 118, Murder, paragraph (a)(4) is amended to read:

(a)(4) is engaged in the perpetration or attempted perpetration of burglary, sodomy, *rape, rape of a child, aggravated sexual assault, aggravated sexual assault of a child, aggravated sexual contact, aggravated sexual abuse of a child, aggravated sexual contact with a child,* robbery or aggravated arson; is guilty of murder, and shall suffer such punishment as a court martial may direct, except that if found guilty under clause (1) or (4), he shall suffer death or imprisonment for life as a court martial may direct.

(b) Paragraph 43, Article 118, Murder, paragraph (b)(4) is amended to read:

(b)(4) That, at the time of the killing, the accused was engaged in the perpetration or attempted perpetration of burglary, sodomy, *rape, rape of a child, aggravated sexual assault, aggravated sexual assault of a child, aggravated sexual contact, aggravated sexual abuse of a child, aggravated sexual contact with a child,* robbery, or aggravated arson.

(c) Paragraph 44, Article 119, Manslaughter, paragraph (b)(2)(d), is amended to read:

(b)(2)(d) That this act or omission of the accused constituted culpable negligence, or occurred while the accused was perpetrating or attempting to perpetrate an offense directly affecting the person other than burglary, sodomy, *rape, rape of a child, aggravated sexual assault, aggravated sexual assault of a child, aggravated sexual contact, aggravated sexual abuse of a child, aggravated sexual contact with a child,* robbery, or aggravated arson.

(d) Paragraph 45, Rape and Carnal Knowledge, is amended to read:

Article 120. Rape, Sexual Assault, and Other Sexual Misconduct

a. *Text. See* Article 120, UCMJ.

(a) Rape. Any person subject to this chapter who causes another person of any age to engage in a sexual act by—

(1) Using force against that other person;

(2) Causing grievous bodily harm to any person;

(3) Threatening or placing that other person in fear that any person will be subjected to death, grievous bodily harm, or kidnapping;

(4) Rendering another person unconscious; or

(5) Administering to another person by force or threat of force, or without the knowledge or permission of that person, a drug, intoxicant, or other similar substance and thereby substantially impairs the ability of that other person to appraise or control conduct;

Is guilty of rape and shall be punished as a court-martial may direct.

(b) Rape of a child. Any person subject to this chapter who—

(1) Engages in a sexual act with a child who has not attained the age of 12 years; or

(2) Engages in a sexual act under the circumstances described in subsection (a) with a child who has attained the age of 12 years;

Is guilty of rape of a child and shall be punished as a court-martial may direct.

(c) Aggravated sexual assault. Any person subject to this chapter who—

(1) Causes another person of any age to engage in a sexual act by—

(A) Threatening or placing that other person in fear (other than by threatening or placing that other person in fear that any person will be subjected to death, grievous bodily harm, or kidnapping); or

(B) Causing bodily harm; or

(2) Engages in a sexual act with another person of any age if that other person is substantially incapacitated or substantially incapable of—

(A) Appraising the nature of the sexual act;

(B) Declining participation in the sexual act; or

(C) Communicating unwillingness to engage in the sexual act;

Is guilty of aggravated sexual assault and shall be punished as a court-martial may direct.

(d) Aggravated sexual assault of a child. Any person subject to this chapter who engages in a sexual act with a child who has attained the age of 12 years is guilty of aggravated sexual assault of a child and shall be punished as a court-martial may direct.

(e) Aggravated sexual contact. Any person subject to this chapter who engages in or causes sexual contact with or by another person, if to do so would violate subsection (a) (rape) had the sexual contact been a sexual act, is guilty of aggravated sexual contact and shall be punished as a court-martial may direct.

(f) Aggravated sexual abuse of a child. Any person subject to this chapter who engages in a lewd act with a child is guilty of aggravated sexual abuse of a child and shall be punished as a court-martial may direct.

(g) Aggravated sexual contact with a child. Any person subject to this chapter who engages in or causes sexual contact with or by another person, if to do so would violate subsection (b) (rape of a child) had the sexual contact been a sexual act, is guilty of aggravated sexual contact with a child and shall be punished as a court-martial may direct.

(h) Abusive sexual contact. Any person subject to this chapter who engages in or causes sexual contact with or by another person, if to do so would violate subsection (c) (aggravated sexual assault) had the sexual contact been a sexual act, is guilty of abusive sexual contact and shall be punished as a court-martial may direct.

(i) Abusive sexual contact with a child. Any person subject to this chapter who engages in or causes sexual contact with or by another person, if to do so would violate subsection (d) (aggravated sexual assault of a child) had the sexual contact been a sexual act, is guilty of abusive sexual contact with a child and shall be punished as a court-martial may direct.

(j) Indecent liberty with a child. Any person subject to this chapter who engages in indecent liberty in the physical presence of a child—

(1) With the intent to arouse, appeal to, or gratify the sexual desire of any person; or

(2) With the intent to abuse, humiliate, or degrade any person; is guilty of indecent liberty with a child and shall be punished as a court-martial may direct.

(k) Indecent act. Any person subject to this chapter who engages in indecent conduct is guilty of an indecent act and shall be punished as a court-martial may direct.

(l) Forcible pandering. Any person subject to this chapter who compels another person to engage in an act of prostitution with another person to be directed to said person is guilty of forcible pandering and shall be punished as a court-martial may direct.

(m) Wrongful sexual contact. Any person subject to this chapter who, without legal justification or lawful authorization, engages in sexual contact with another person without that other person's permission is guilty of wrongful sexual contact and shall be punished as a court-martial may direct.

(n) Indecent exposure. Any person subject to this chapter who intentionally exposes, in an indecent manner, in any place where the conduct involved may reasonably be expected to be viewed by people other than members of the actor's family or household, the genitalia, anus, buttocks, or female areola or nipple is guilty of indecent exposure and shall by punished as a court-martial may direct.

(o) Age of child.

(1) Twelve years. In a prosecution under subsection (b) (rape of a child), subsection (g) (aggravated sexual contact with a child), or subsection (j) (indecent liberty with a child), it need not be proven that the accused knew that the other person engaging in the sexual act, contact, or liberty had not attained the age of 12 years. It is not an affirmative defense that the accused reasonably believed that the child had attained the age of 12 years.

(2) Sixteen years. In a prosecution under subsection (d) (aggravated sexual assault of a child), subsection (f) (aggravated sexual abuse of a child), subsection (i) (abusive sexual contact with a child), or subsection (j) (indecent liberty with a child), it need not be proven that the accused knew that the other person engaging in the sexual act, contact, or liberty had not attained the age of 16 years. Unlike in paragraph (1), however, it is an affirmative defense that the accused reasonably believed that the child had attained the age of 16 years.

(p) Proof of threat. In a prosecution under this section, in proving that the accused made a threat, it need not be proven that the accused actually intended to carry out the threat.

(q) Marriage.

(1) In general. In a prosecution under paragraph (2) of subsection (c) (aggravated sexual assault), or under subsection (d) (aggravated sexual assault of a child), subsection (f) (aggravated sexual abuse of a child), subsection (i) (abusive sexual contact with a child), subsection (j) (indecent liberty with a child), subsection (m) (wrongful sexual contact), or subsection (n) (indecent exposure), it is an affirmative defense that the accused and the other person when they engaged in the sexual act, sexual contact, or sexual conduct are married to each other.

(2) Definition. For purposes of this subsection, a marriage is a relationship, recognized by the laws of a competent State or foreign jurisdiction, between the accused and the other person as spouses. A marriage exists until it is dissolved in accordance with the laws of a competent State or foreign jurisdiction.

(3) Exception. Paragraph (1) shall not apply if the accused's intent at the time of the sexual conduct is to abuse, humiliate, or degrade any person.

(r) Consent and mistake of fact as to consent. Lack of permission is an element of the offense in subsection (m) (wrongful sexual contact). Consent and mistake of fact as to consent are not an issue, or an affirmative defense, in a prosecution under any other subsection, except they are an affirmative defense for the sexual conduct in issue in a prosecution under subsection (a) (rape), subsection (c) (aggravated sexual assault), subsection (e) (aggravated sexual contact), and subsection (h) (abusive sexual contact).

(s) Other affirmative defenses not precluded. The enumeration in this section of some affirmative defenses shall not be construed as excluding the existence of others.

(t) Definitions. In this section:

(1) Sexual act. The term 'sexual act' means—

(A) Contact between the penis and the vulva, and for purposes of this subparagraph contact involving the penis occurs upon penetration, however slight; or

(B) The penetration, however slight, of the genital opening of another by a hand or finger or by any object, with an intent to abuse, humiliate, harass, or degrade any person or to arouse or gratify the sexual desire of any person.

(2) Sexual contact. The term 'sexual contact' means the intentional touching, either directly or through the clothing, of the genitalia, anus, groin, breast,

inner thigh, or buttocks of another person, or intentionally causing another person to touch, either directly or through the clothing, the genitalia, anus, groin, breast, inner thigh, or buttocks of any person, with an intent to abuse, humiliate, or degrade any person or to arouse or gratify the sexual desire of any person.

(3) Grievous bodily harm. The term 'grievous bodily harm' means serious bodily injury. It includes fractured or dislocated bones, deep cuts, torn members of the body, serious damage to internal organs, and other severe bodily injuries. It does not include minor injuries such as a black eye or a bloody nose. It is the same level of injury as in section 928 (article 128) of this chapter, and a lesser degree of injury than in section 2246(4) of title 18.

(4) Dangerous weapon or object. The term 'dangerous weapon or object' means

(A) Any firearm, loaded or not, and whether operable or not;

(B) Any other weapon, device, instrument, material, or substance, whether animate or inanimate, that in the manner it is used, or is intended to be used, is known to be capable of producing death or grievous bodily harm; or

(C) Any object fashioned or utilized in such a manner as to lead the victim under the circumstances to reasonably believe it to be capable of producing death or grievous bodily harm.

(5) Force. The term 'force' means action to compel submission of another or to overcome or prevent another's resistance by—

(A) The use or display of a dangerous weapon or object;

(B) The suggestion of possession of a dangerous weapon or object that is used in a manner to cause another to believe it is a dangerous weapon or object; or

(C) Physical violence, strength, power, or restraint applied to another person, sufficient that the other person could not avoid or escape the sexual conduct.

(6) Threatening or placing that other person in fear. The term 'threatening or placing that other person in fear' under paragraph (3) of subsection (a) (rape), or under subsection (e) (aggravated sexual contact), means a communication or action that is of sufficient consequence to cause a reasonable fear that non-compliance will result in the victim or another person being subjected to death, grievous bodily harm, or kidnapping.

(7) Threatening or placing that other person in fear.

(A) In general. The term 'threatening or placing that other person in fear' under paragraph (1)(A) of subsection (c) (aggravated sexual assault), or under subsection (h) (abusive sexual contact), means a communication or action that is of sufficient consequence to cause a reasonable fear that non-compliance will result in the victim or another being subjected to a lesser degree of harm than death, grievous bodily harm, or kidnapping.

(B) Inclusions. Such lesser degree of harm includes—

(i) Physical injury to another person or to another person's property; or

(ii) A threat—

(I) To accuse any person of a crime;

(II) To expose a secret or publicize an asserted fact, whether true or false, tending to subject some person to hatred, contempt or ridicule; or

(III) Through the use or abuse of military position, rank, or authority, to affect or threaten to affect, either positively or negatively, the military career of some person.

(8) Bodily harm. The term 'bodily harm' means any offensive touching of another, however slight.

(9) Child. The term 'child' means any person who has not attained the age of 16 years.

(10) Lewd act. The term 'lewd act' means—

(A) The intentional touching, not through the clothing, of the genitalia of another person, with an intent to abuse, humiliate, or degrade any person, or to arouse or gratify the sexual desire of any person; or

(B) Intentionally causing another person to touch, not through the clothing, the genitalia of any person with an intent to abuse, humiliate or degrade any person, or to arouse or gratify the sexual desire of any person.

(11) Indecent liberty. The term 'indecent liberty' means indecent conduct, but physical contact is not required. It includes one who with the requisite intent exposes one's genitalia, anus, buttocks, or female areola or nipple to a child. An indecent liberty may consist of communication of indecent language as long as the communication is made in the physical presence of the child. If words designed to excite sexual desire are spoken to a child, or a child is exposed to or involved in sexual conduct, it is an indecent liberty; the child's consent is not relevant.

(12) Indecent conduct. The term 'indecent conduct' means that form of immorality relating to sexual impurity which is grossly vulgar, obscene, and repugnant to common propriety, and tends to excite sexual desire or deprave morals with respect to sexual relations. Indecent conduct includes observing, or making a videotape, photograph, motion picture, print, negative, slide, or other mechanically, electronically, or chemically reproduced visual material, without another person's consent, and contrary to that other person's reasonable expectation of privacy, of—

(A) That other person's genitalia, anus, or buttocks, or (if that other person is female) that person's areola or nipple; or

(B) That other person while that other person is engaged in a sexual act, sodomy (under section 925 (article 125)), or sexual contact.

(13) Act of prostitution. The term 'act of prostitution' means a sexual act, sexual contact, or lewd act for the purpose of receiving money or other compensation.

(14) Consent. The term 'consent' means words or overt acts indicating a freely given agreement to the sexual conduct at issue by a competent person. An expression of lack of consent through words or conduct means there is no consent. Lack of verbal or physical resistance or submission resulting from the accused's use of force, threat of force, or placing another person in fear does not constitute consent. A current or previous dating relationship by itself or the manner of dress of the person involved with the accused in the sexual conduct at issue shall not constitute consent. A person cannot consent to sexual activity if—

(A) Under 16 years of age; or

(B) Substantially incapable of—

(i) Appraising the nature of the sexual conduct at issue due to—

(I) Mental impairment or unconsciousness resulting from consumption of alcohol, drugs, a similar substance, or otherwise; or

(II) Mental disease or defect which renders the person unable to understand the nature of the sexual conduct at issue;

(ii) Physically declining participation in the sexual conduct at issue; or

(iii) Physically communicating unwillingness to engage in the sexual conduct at issue.

(15) Mistake of fact as to consent. The term 'mistake of fact as to consent' means the accused held, as a result of ignorance or mistake, an incorrect belief that the other person engaging in the sexual conduct consented. The ignorance or mistake must have existed in the mind of the accused and must have been reasonable under all the circumstances. To be reasonable the ignorance or mistake must have been based on information, or lack of it, which would indicate to a reasonable person that the other person consented. Additionally, the ignorance or mistake cannot be based on the negligent failure to discover the true facts. Negligence is

the absence of due care. Due care is what a reasonably careful person would do under the same or similar circumstances. The accused's state of intoxication, if any, at the time of the offense is not relevant to mistake of fact. A mistaken belief that the other person consented must be that which a reasonably careful, ordinary, prudent, sober adult would have had under the circumstances at the time of the offense.

(16) Affirmative defense. The term 'affirmative defense' means any special defense which, although not denying that the accused committed the objective acts constituting the offense charged, denies, wholly, or partially, criminal responsibility for those acts. The accused has the burden of proving the affirmative defense by a preponderance of evidence. After the defense meets this burden, the prosecution shall have the burden of proving beyond a reasonable doubt that the affirmative defense did not exist.''.

b. *Elements.*

(1) *Rape.*

(a) *Rape by using force.*

(i) That the accused caused another person, who is of any age, to engage in a sexual act by using force against that other person.

(b) *Rape by causing grievous bodily harm.*

(i) That the accused caused another person, who is of any age, to engage in a sexual act by causing grievous bodily harm to any person.

(c) *Rape by using threats or placing in fear.*

(i) That the accused caused another person, who is of any age, to engage in a sexual act by threatening or placing that other person in fear that any person will be subjected to death, grievous bodily harm, or kidnapping.

(d) *Rape by rendering another unconscious.*

(i) That the accused caused another person, who is of any age, to engage in a sexual act by rendering that other person unconscious.

(e) *Rape by administration of drug, intoxicant, or other similar substance.*

(i) That the accused caused another person, who is of any age, to engage in a sexual act by administering to that other person a drug, intoxicant, or other similar substance;

(ii) That the accused administered the drug, intoxicant or other similar substance by force or threat of force or without the knowledge or permission of that other person; and

(iii) That, as a result, that other person's ability to appraise or control conduct was substantially impaired.

(2) *Rape of a child.*

(a) *Rape of a child who has not attained the age of 12 years.*

(i) That the accused engaged in a sexual act with a child; and

(ii) That at the time of the sexual act the child had not attained the age of twelve years.

(b) *Rape of a child who has attained the age of 12 years but has not attained the age of 16 years by using force.*

(i) That the accused engaged in a sexual act with a child;

(ii) That at the time of the sexual act the child had attained the age of 12 years but had not attained the age of 16 years; and

(iii) That the accused did so by using force against that child.

(c) *Rape of a child who has attained the age of 12 years but has not attained the age of 16 years by causing grievous bodily harm.*

(i) That the accused engaged in a sexual act with a child;

(ii) That at the time of the sexual act the child had attained the age of 12 years but had not attained the age of 16 years; and

(iii) That the accused did so by causing grievous bodily harm to any person.

(d) *Rape of a child who has attained the age of 12 years but has not attained the age of 16 years by using threats or placing in fear.*

(i) That the accused engaged in a sexual act with a child;

(ii) That at the time of the sexual act the child had attained the age of 12 years but had not attained the age of 16 years; and

(iii) That the accused did so by threatening or placing that child in fear that any person will be subjected to death, grievous bodily harm, or kidnapping.

(e) *Rape of a child who has attained the age of 12 years but has not attained the age of 16 years by rendering that child unconscious.*

(i) That the accused engaged in a sexual act with a child;

(ii) That at the time of the sexual act the child had attained the age of 12 years but had not attained the age of 16 years; and

(iii) That the accused did so by rendering that child unconscious.

(f) *Rape of a child who has attained the age of 12 years but has not attained the age of 16 years by administration of drug, intoxicant, or other similar substance.*

(i) That the accused engaged in a sexual act with a child;

(ii) That at the time of the sexual act the child had attained the age of 12 years but had not attained the age of 16 years; and

(iii)(a) That the accused did so by administering to that child a drug, intoxicant, or other similar substance;

(b) That the accused administered the drug, intoxicant, or other similar substance by force or threat of force or without the knowledge or permission of that child; and

(c) That, as a result, that child's ability to appraise or control conduct was substantially impaired.

(3) *Aggravated sexual assault.*

(a) *Aggravated sexual assault by using threats or placing in fear.*

(i) That the accused caused another person, who is of any age, to engage in a sexual act; and

(ii) That the accused did so by threatening or placing that other person in fear that any person would be subjected to bodily harm or other harm (other than by threatening or placing that other person in fear that any person would be subjected to death, grievous bodily harm, or kidnapping).

(b) *Aggravated sexual assault by causing bodily harm.*

(i) That the accused caused another person, who is of any age, to engage in a sexual act; and

(ii) That the accused did so by causing bodily harm to another person.

(c) *Aggravated sexual assault upon a person substantially incapacitated or substantially incapable of appraising the act, declining participation, or communicating unwillingness.*

(i) That the accused engaged in a sexual act with another person, who is of any age; and

(Note: add one of the following elements)

(ii) That the other person was substantially incapacitated;

(iii) That the other person was substantially incapable of appraising the nature of the sexual act;

(iv) That the other person was substantially incapable of declining participation in the sexual act; or

(v) That the other person was substantially incapable of communicating unwillingness to engage in the sexual act.

(4) *Aggravated sexual assault of a child who has attained the age of 12 years but has not attained the age of 16 years.*

(a) That the accused engaged in a sexual act with a child; and

(b) That at the time of the sexual act the child had attained the age of 12 years but had not attained the age of 16 years.

(5) *Aggravated sexual contact.*

(a) *Aggravated sexual contact by using force.*

(i) That the accused engaged in sexual contact with another person; or

(ii) That the accused caused sexual contact with or by another person; and

(iii) That the accused did so by using force against that other person.

(b) *Aggravated sexual contact by causing grievous bodily harm.*

(i) That the accused engaged in sexual contact with another person; or

(ii) That the accused caused sexual contact with or by another person; and

(iii) That the accused did so by causing grievous bodily harm to any person.

(c) *Aggravated sexual contact by using threats or placing in fear.*

(i) That the accused engaged in sexual contact with another person; or

(ii) That the accused caused sexual contact with or by another person; and

(iii) That the accused did so by threatening or placing that other person in fear that any person will be subjected to death, grievous bodily harm, or kidnapping.

(d) *Aggravated sexual contact by rendering another unconscious.*

(i) That the accused engaged in sexual contact with another person; or

(ii) That the accused caused sexual contact with or by another person; and

(iii) That the accused did so by rendering that other person unconscious.

(e) *Aggravated sexual contact by administration of drug, intoxicant, or other similar substance.*

(i) That the accused engaged in sexual contact with another person; or

(ii) That the accused caused sexual contact with or by another person; and

(iii)(a) That the accused did so by administering to that other person a drug, intoxicant, or other similar substance;

(b) That the accused administered the drug, intoxicant, or other similar substance by force or threat of force or without the knowledge or permission of that other person; and

(c) That, as a result, that other person's ability to appraise or control conduct was substantially impaired.

(6) *Aggravated sexual abuse of a child.*

(a) That the accused engaged in a lewd act; and

(b) That the act was committed with a child who has not attained the age of 16 years.

(7) *Aggravated Sexual Contact with a Child.*

(a) *Aggravated sexual contact with a child who has not attained the age of 12 years.*

(i) That the accused engaged in sexual contact with a child; or

(ii) That the accused caused sexual contact with or by a child or by another person with a child; and

(iii) That at the time of the sexual contact the child had not attained the age of twelve years.

(b) *Aggravated sexual contact with a child who has attained the age of 12 years but has not attained the age of 16 years by using force.*

(i) That the accused engaged in sexual contact with a child; or

(ii) That the accused caused sexual contact with or by a child or by another person with a child; and

(iii) That at the time of the sexual contact the child had attained the age of 12 years but had not attained the age of 16 years; and

(iv) That the accused did so by using force against that child.

(c) *Aggravated sexual contact with a child who has attained the age of 12 years but has not attained the age of 16 years by causing grievous bodily harm.*

(i) That the accused engaged in sexual contact with a child; or

(ii) That the accused caused sexual contact with or by a child or by another person with a child; and

(iii) That at the time of the sexual contact the child had attained the age of 12 years but had not attained the age of 16 years; and

(iv) That the accused did so by causing grievous bodily harm to any person.

(d) *Aggravated sexual contact with a child who has attained the age of 12 years but has not attained the age of 16 years by using threats or placing in fear.*

(i) That the accused engaged in sexual contact with a child; or

(ii) That the accused caused sexual contact with or by a child or by another person with a child; and

(iii) That at the time of the sexual contact the child had attained the age of 12 years but had not attained the age of 16 years; and

(iv) That the accused did so by threatening or placing that child or that other person in fear that any person will be subjected to death, grievous bodily harm, or kidnapping.

(e) *Aggravated sexual contact with a child who has attained the age of 12 years but has not attained the age of 16 years by rendering another or that child unconscious.*

(i) That the accused engaged in sexual contact with a child; or

(ii) That the accused caused sexual contact with or by a child or by another person with a child; and

(iii) That at the time of the sexual contact the child had attained the age of 12 years but had not attained the age of 16 years; and

(iv) That the accused did so by rendering that child or that other person unconscious.

(f) *Aggravated sexual contact with a child who has attained the age of 12 years but has not attained the age of 16 years by administration of drug, intoxicant, or other similar substance.*

(i) That the accused engaged in sexual contact with a child; or

(ii) That the accused caused sexual contact with or by a child or by another person with a child; and

(iii) That at the time of the sexual contact the child had attained the age of 12 years but had not attained the age of 16 years; and

(iv)(a) That the accused did so by administering to that child or that other person a drug, intoxicant, or other similar substance;

(b) That the accused administered the drug, intoxicant, or other similar substance by force or threat of force or without the knowledge or permission of that child or that other person; and

(c) That, as a result, that child's or that other person's ability to appraise or control conduct was substantially impaired.

(8) *Abusive sexual contact.*

(a) *Abusive sexual contact by using threats or placing in fear.*

(i) That the accused engaged in sexual contact with another person; or

(ii) That the accused caused sexual contact with or by another person; and

(iii) That the accused did so by threatening or placing that other person in fear that any person would be subjected to bodily harm or other harm (other than by threatening or placing that other person in fear that any person would be subjected to death, grievous bodily harm, or kidnapping).

(b) *Abusive sexual contact by causing bodily harm.*

(i) That the accused engaged in sexual contact with another person; or

(ii) That the accused caused sexual contact with or by another person; and

(iii) That the accused did so by causing bodily harm to another person.

(c) *Abusive sexual contact upon a person substantially incapacitated or substantially incapable of appraising the act, declining participation, or communicating unwillingness.*

(i) That the accused engaged in sexual contact with another person; or

(ii) That the accused caused sexual contact with or by another person; and (Note: Add one of the following elements):

(iii) That the other person was substantially incapacitated;

(iv) That the other person was substantially incapable of appraising the nature of the sexual contact;

(v) That the other person was substantially incapable of declining participation in the sexual contact; or

(vi) That the other person was substantially incapable of communicating unwillingness to engage in the sexual contact.

(9) *Abusive sexual contact with a child.*

(a) That the accused engaged in sexual contact with a child; or

(b) That the accused caused sexual contact with or by a child or by another person with a child; and

(c) That at the time of the sexual contact the child had attained the age of 12 years but had not attained the age of 16 years.

(10) *Indecent liberty with a child.*

(a) That the accused committed a certain act or communication;

(b) That the act or communication was indecent;

(c) That the accused committed the act or communication in the physical presence of a certain child;

(d) That the child was under 16 years of age; and

(e) That the accused committed the act or communication with the intent to:

(i) arouse, appeal to, or gratify the sexual desires of any person; or

(ii) abuse, humiliate, or degrade any person.

(11) *Indecent act.*

(a) That the accused engaged in certain conduct; and

(b) That the conduct was indecent conduct.

(12) *Forcible pandering.*

(a) That the accused compelled a certain person to engage in an act of prostitution; and

(b) That the accused directed another person to said person, who then engaged in an act of prostitution.

(13) *Wrongful sexual contact.*

(a) That the accused had sexual contact with another person;

(b) That the accused did so without that other person's permission; and

(c) That the accused had no legal justification or lawful authorization for that sexual contact.

(14) *Indecent exposure.*

(a) That the accused exposed his or her genitalia, anus, buttocks, or female areola or nipple;

(b) That the accused's exposure was in an indecent manner;

(c) That the exposure occurred in a place where the conduct involved could reasonably be expected to be viewed by people other than the accused's family or household; and

(d) That the exposure was intentional.

c. *Explanation.*

(1) *Definitions.* The terms are defined in ¶ 45a(t), supra.

(2) *Character of victim.* See Military Rule of Evidence 412 concerning rules of evidence relating to the character of the victim of an alleged sexual offense.

(3) *Indecent.* In conduct cases, ''Indecent'' generally signifies that form of immorality relating to sexual impurity which is not only grossly vulgar, obscene, and repugnant to common propriety, but also tends to excite lust and deprave the morals with respect to sexual relations. Language is indecent if it tends reasonably to corrupt morals or incite libidinous thoughts. The language must violate community standards.

d. *Lesser included offenses.* The following lesser included offenses are based on internal cross-references provided in the statutory text of Article 120. See subsection (e) for or a further listing of possible LIOs.

(1) *Rape.*

(a) Article 120—aggravated sexual contact.

(b) Article 134—assault with intent to commit rape.

(c) Article 128—aggravated assault, assault, assault consummated by a battery.

(d) Article 80—attempts.

(2) *Rape of a Child.*

(a) Article 120—aggravated sexual contact with a child; indecent act.

(b) Article 134—assault with intent to commit rape.

(c) Article 128—aggravated assault; assault; assault consummated by a battery; assault consummated by a battery upon a child under 16.

(d) Article 80—attempts.

(3) *Aggravated Sexual Assault.*

(a) Article 120—abusive sexual contact.

(b) Article 128—aggravated assault, assault, assault consummated by a battery.

(c) Article 80—attempts.

(4) *Aggravated Sexual Assault of a Child.*

(a) Article 120—abusive sexual contact with a child; indecent act.

(b) Article 128—aggravated assault; assault; assault consummated by a battery; assault consummated by a battery upon a child under 16.

(c) Article 80—attempts.

(5) *Aggravated Sexual Contact.*

(a) Article 128—aggravated assault; assault; assault consummated by a battery.

(b) Article 80—attempts.

(6) *Aggravated Sexual Abuse of a Child.*

(a) Article 120—indecent act.

(b) Article 128—assault; assault consummated by a battery; assault consummated by a battery upon a child under 16.

(c) Article 80—attempts.

(7) *Aggravated Sexual Contact with a Child.*

(a) Article 120—indecent act.

(b) Article 128—assault; assault consummated by a battery; assault consummated by a battery upon a child under 16.

(c) Article 80—attempts.

(8) *Abusive Sexual Contact.*

(a) Article 128—assault; assault consummated by a battery.

(b) Article 80—attempts.

(9) *Abusive Sexual Contact with a Child.*

(a) Article 120—indecent act.

(b) Article 128—assault; assault consummated by a battery; assault consummated by a battery upon a child under 16.

(c) Article 80—attempts.

(10) *Indecent Liberty with a Child.*

(a) Article 120—indecent act.

(b) Article 80—attempts.

(11) *Indecent Act.* Article 80 attempts.

(12) *Forcible Pandering.* Article 80 attempts.

(13) *Wrongful Sexual Contact.* Article 80 attempts.

(14) *Indecent Exposure.* Article 80 attempts.

e. *Additional Lesser Included Offenses.* Depending on the factual circumstances in each case, to include the type of act and level of force involved, the following offenses may be considered lesser included in addition to those offenses listed in subsection d. (See subsection (d) for a listing of the offenses that are specifically cross-referenced within the statutory text of Article 120.) The elements of the proposed lesser included offense should be compared with the elements of the greater offense to determine if the elements of the lesser offense are derivative of the greater offense and vice versa. See Appendix 23 for further explanation of lesser included offenses.

(1)(a) *Rape by using force.* Article 120—indecent act; wrongful sexual contact.

(1)(b) *Rape by causing grievous bodily harm.* Article 120 aggravated sexual assault by causing bodily harm; abusive sexual contact by causing bodily harm; indecent act; wrongful sexual contact.

(1)(c) *Rape by using threats or placing in fear.* Article 120 aggravated sexual assault by using threats or placing in fear; abusive sexual contact by using threats or placing in fear; indecent act; wrongful sexual contact.

(1)(d) *Rape by rendering another unconscious.* Article 120 aggravated sexual assault upon a person substantially incapacitated; abusive sexual contact upon a person substantially incapacitated; indecent act; wrongful sexual contact.

(1)(e) *Rape by administration of drug, intoxicant, or other similar substance.* Article 120 aggravated sexual assault upon a person substantially incapacitated; abusive sexual contact upon a person substantially incapacitated; indecent act; wrongful sexual contact.

(2)(a)–(f) *Rape of a Child who has not attained 12 years; Rape of a child who has attained the age of 12 years but has not attained the age of 16 years.* Article 120—aggravated sexual assault of a child; aggravated sexual abuse of a child; abusive sexual contact with a child; indecent liberty with a child; wrongful sexual contact.

(3) *Aggravated Sexual Assault.* Article 120—wrongful sexual contact; indecent act.

(4) *Aggravated Sexual Assault of a Child.* Article 120—aggravated sexual abuse of a child; indecent liberty with a child; wrongful sexual contact.

(5)(a) *Aggravated Sexual Contact by force.* Article 120—indecent act; wrongful sexual contact.

(5)(b) *Aggravated Sexual Contact by causing grievous bodily harm.* Article 120—abusive sexual contact by causing bodily harm; indecent act; wrongful sexual contact.

(5)(c) *Aggravated Sexual Contact by using threats or placing in fear.* Article 120—abusive sexual contact by using threats or placing in fear; indecent act; wrongful sexual contact.

(5)(d) *Aggravated Sexual Contact by rendering another unconscious.* Article 120 abusive sexual contact upon a person substantially incapacitated; indecent act; wrongful sexual contact.

(5)(e) *Aggravated Sexual Contact by administration of drug, intoxicant, or other similar substance.* Article 120 abusive sexual contact upon a person substantially incapacitated; indecent act; wrongful sexual contact.

(6) *Aggravated Sexual Abuse of a Child.* Article 120—aggravated sexual contact with a child; aggravated sexual abuse of a child; indecent liberty with a child; wrongful sexual contact.

(7) *Aggravated Sexual Contact with a Child.* Article 120—abusive sexual contact with a child; indecent liberty with a child; wrongful sexual contact.

(8) *Abusive Sexual Contact.* Article 120—wrongful sexual contact; indecent act.

(9) *Abusive Sexual Contact with a Child.* Article 120—indecent liberty with a child; wrongful sexual contact.

(10) *Indecent Liberty with a Child.* Article 120—wrongful sexual contact.

f. *Maximum punishment.*

(1) Rape and Rape of a Child. Death or such other punishment as a court martial may direct.

(2) Aggravated Sexual Assault. Dishonorable discharge, forfeiture of all pay and allowances, and confinement for 30 years.

(3) Aggravated Sexual Assault of a Child who has attained the age of 12 years but has not attained the age of 16 years, Aggravated Sexual Abuse of a Child, Aggravated Sexual Contact, and Aggravated Sexual Contact with a Child. Dishonorable discharge, forfeiture of all pay and allowances, and confinement for 20 years.

(4) Abusive Sexual Contact with a Child and Indecent Liberty with a Child. Dishonorable discharge, forfeiture of all pay and allowances, and confinement for 15 years.

(5) Abusive Sexual Contact. Dishonorable discharge, forfeiture of all pay and allowances, and confinement for 7 years.

(6) Indecent Act or Forcible Pandering. Dishonorable discharge, forfeiture of all pay and allowances, and confinement for 5 years.

(7) Wrongful Sexual Contact or Indecent Exposure. Dishonorable discharge, forfeiture of all pay and allowances, and confinement for 1 year.

g. *Sample specifications.*

(1) *Rape.*

(a) *Rape by using force.*

(i) *Rape by use or display of dangerous weapon or object.*

In that ____ (personal jurisdiction data), did (at/on board—location) (subject-matter jurisdiction data, if required), on or about ____ 20 ____, cause ____ to engage in a sexual act, to wit: ____, by (using a dangerous weapon or object, to wit: ____ against (him)(her)) (displaying a dangerous weapon or object, to wit: ____ to (him)(her)).

(ii) *Rape by suggestion of possession of dangerous weapon or object.*

In that ____ (personal jurisdiction data), did (at/on board—location) (subject-matter jurisdiction data, if required), on or about ____ 20 ____, cause ____ to engage in a sexual act, to wit: ____, by the suggestion of possession of a dangerous weapon or an object that was used in a manner to cause (him)(her) to believe it was a dangerous weapon or object.

(iii) *Rape by using physical violence, strength, power, or restraint to any person.*

In that ____ (personal jurisdiction data), did (at/on board—location) (subject-matter jurisdiction data, if required), on or about ____ 20 ____, cause ____ to engage in a sexual act, to wit:____, by using (physical violence) (strength) (power) (restraint applied to ____), sufficient that (he)(she) could not avoid or escape the sexual conduct.

(b) *Rape by causing grievous bodily harm.*

In that ____ (personal jurisdiction data), did (at/on board—location) (subject-matter jurisdiction data, if required), on or about ____ 20 ____, cause ____ to engage in a sexual act, to wit: ____, by causing grievous bodily harm upon (him)(her)(____), to wit: a (broken leg)(deep cut)(fractured skull)(____).

(c) *Rape by using threats or placing in fear.*

In that ____ (personal jurisdiction data), did (at/on board—location) (subject-matter jurisdiction data, if required), on or about ____ 20 ____, cause to engage in a sexual act, to wit: ____, by [threatening] [placing (him)(her) in fear] that (he)(she) (____) will be subjected to (death) (grievous bodily harm) (kidnapping) by ____.

(d) *Rape by rendering another unconscious.* In that ____ (personal jurisdiction data), did (at/on board—location) (subject-matter jurisdiction data, if required), on or about ____ 20 ____, cause ____ to engage in a sexual act, to wit: ____, by rendering (him)(her) unconscious.

(e) *Rape by administration of drug, intoxicant, or other similar substance.* In that ____ (personal jurisdiction data), did (at/on board—location) (subject-matter jurisdiction data, if required), on or about ____ 20 ____, cause ____ to engage in a sexual act, to wit: ____, by administering to (him)(her) a drug, intoxicant, or other similar substance, (by force) (by threat of force) (without (his)(her) knowledge or permission), and thereby substantially impaired (his)(her) ability to [(appraise) (control)][(his)(her)] conduct.

(2) *Rape of a child.*

(a) *Rape of a child who has not attained the age of 12 years.* In that ____ (personal jurisdiction data), did (at/on board—location) (subject-matter jurisdiction data, if required), on or about ____ 20 ____, engage in a sexual act, to wit: ____ with ____, a child who had not attained the age of 12 years.

(b) *Rape of a child who has attained the age of 12 years but has not attained the age of 16 years by using force.*

(i) *Rape of a child who has attained the age of 12 years but has not attained the age of 16 years by use or display of dangerous weapon or object.* In that ____ (personal jurisdiction data), did (at/on board—location) (subject-matter jurisdiction data, if required), on or about ____ 20 ____, engage in a sexual act, to wit: ____, with ____, a child who had attained the age of 12 years, but had not attained the age of 16 years, by (using a dangerous weapon or object, to wit: ____ against (him)(her)) (displaying a dangerous weapon or object, to wit: ____ to (him)(her)).

(ii) *Rape of a child who has attained the age of 12 years but has not attained the age of 16 years by suggestion of possession of dangerous weapon or object.* In that ____ (personal jurisdiction data), did (at/on board—location) (subject-matter jurisdiction

data, if required), on or about ____ 20 ____, engage in a sexual act, to wit: ____, with ____, a child who had attained the age of 12 years, but had not attained the age of 16 years, by the suggestion of possession of a dangerous weapon or an object that was used in a manner to cause (him)(her) ____ to believe it was a dangerous weapon or object.

(iii) *Rape of a child who has attained the age of 12 years but has not attained the age of 16 years by using physical violence, strength, power, or restraint to any person.* In that ____ (personal jurisdiction data), did (at/on board—location) (subject-matter jurisdiction data, if required), on or about ____ 20 ____, engage in a sexual act, to wit: ____ with ____, a child who had attained the age of 12 years, but had not attained the age of 16 years, by using (physical violence) (strength) (power) (restraint applied to ____) sufficient that (he)(she) could not avoid or escape the sexual conduct.

(c) *Rape of a child who has attained the age of 12 years but has not attained the age of 16 years by causing grievous bodily harm.* In that ____ (personal jurisdiction data), did (at/on board—location) (subject-matter jurisdiction data, if required), on or about ____ 20 ____, engage in a sexual act, to wit: ____, with ____, a child who had attained the age of 12 years, but had not attained the age of 16 years, by causing grievous bodily harm upon (him)(her) (____), to wit: a (broken leg) (deep cut) (fractured skull) (____).

(d) *Rape of a child who has attained the age of 12 years but has not attained the age of 16 years by using threats or placing in fear.* In that ____ (personal jurisdiction data), did (at/on board—location) (subject-matter jurisdiction data, if required), on or about ____ 20 ____, engage in a sexual act, to wit: ____, with ____, a child who had attained the age of 12 years, but had not attained the age of 16 years, by [threatening] [placing (him)(her) in fear] that (he)(she) (____) would be subjected to (death) (grievous bodily harm) (kidnapping) by ____.

(e) *Rape of a child who has attained the age of 12 years but has not attained the age of 16 years by rendering that child unconscious.* In that ____ (personal jurisdiction data), did (at/on board—location) (subject-matter jurisdiction data, if required), on or about ____ 20 ____, engage in a sexual act, to wit: ____, with ____, a child who had attained the age of 12 years, but had not attained the age of 16 years, by rendering (him)(her) unconscious.

(f) *Rape of a child who has attained the age of 12 years but has not attained the age of 16 years by administration of drug, intoxicant, or other similar substance.* In that ____ (personal jurisdiction data), did (at/on board—location) (subject-matter jurisdiction data, if required), on or about ____ 20 ____, engage in a sexual act, to wit: ____, with ____, a child who had attained the age of 12 years, but had not attained the age of 16 years, by administering to (him)(her) a drug, intoxicant, or other similar substance (by force) (by threat of force) (without (his)(her) knowledge or permission), and thereby substantially impaired (his)(her) ability to [(appraise) (control)][(his)(her)] conduct.

(3) *Aggravated sexual assault.*

(a) *Aggravated sexual assault by using threats or placing in fear.* In that ____ (personal jurisdiction data), did (at/on board—location) (subject-matter jurisdiction data, if required), on or about ____ 20 ____, cause to engage in a sexual act, to wit: ____, by [threatening][placing(him)(her) in fear of] [(physical injury to ____) (injury to ____'s property) (accusation of crime) (exposition of secret) (abuse of military position) (____)].

(b) *Aggravated sexual assault by causing bodily harm.* In that ____ (personal jurisdiction data), did (at/on board—location) (subject-matter jurisdiction data, if required), on or about ____ 20 ____, cause to engage in a sexual act, to wit: ____, by causing bodily harm upon (him)(her) (____), to wit: ____.

(c) *Aggravated sexual assault upon a person substantially incapacitated or substantially incapable of appraising the act, declining participation, or communicating unwillingness.* In that ____ (personal jurisdiction data), did (at/on board—location) (subject-matter jurisdiction data, if required), on or about ____ 20 ____, engage in a sexual act, to wit: ____ with ____, who was (substantially incapacitated) [substantially incapable of (appraising the nature of the sexual act)(declining participation in the sexual act) (communicating unwillingness to engage in the sexual act)].

(4) *Aggravated sexual assault of a child who has attained the age of 12 years but has not attained the age of 16 years.* In that ____ (personal jurisdiction data), did (at/on board—location) (subject-matter jurisdiction data, if required), on or about ____ 20 ____, engage in a sexual act, to wit: ____ with ____, who had attained the age of 12 years, but had not attained the age of 16 years.

(5) *Aggravated sexual contact.*

(a) *Aggravated sexual contact by using force.*

(i) *Aggravated sexual contact by use or display of dangerous weapon or object.* In that ____ (personal jurisdiction data), did (at/on board—location) (subject-matter jurisdiction data, if required), on or about ____ 20 ____, [(engage in sexual contact, to wit: ____ with ____) (cause ____ to engage in sexual contact, to wit: ____, with ____) (cause sexual contact with or by ____, to wit: ____)] by (using a dangerous weapon or object, to wit: ____ against (him)(her)) (displaying a dangerous weapon or object, to wit: ____ to (him)(her)).

(ii) *Aggravated sexual contact by suggestion of possession of dangerous weapon or object.*

In that ____ (personal jurisdiction data), did (at/on board—location) (subject-matter jurisdiction data, if required), on or about ____ 20 ____, [(engage in sexual contact, to wit: ____ with ____) (cause ____ to engage in sexual contact, to wit: ____, with ____) (cause sexual contact with or by ____, to wit: ____)] by the suggestion of possession of a dangerous weapon or an object that was used in a manner to cause (him)(her) (____) to believe it was a dangerous weapon or object.

(iii) *Aggravated sexual contact by using physical violence, strength, power, or restraint to any person.*

In that ____ (personal jurisdiction data), did (at/on board—location) (subject-matter jurisdiction data, if required), on or about ____ 20 ____, [(engage in sexual contact, to wit: ____ with ____) (cause to engage in sexual contact, to wit: ____, with ____) (cause sexual contact with or by ____, to wit: ____)] by using (physical violence) (strength) (power) (restraint applied to ____), sufficient that (he)(she) (____) could not avoid or escape the sexual conduct.

(b) *Aggravated sexual contact by causing grievous bodily harm.*

In that ____ (personal jurisdiction data), did (at/on board—location) (subject-matter jurisdiction data, if required), on or about ____ 20 ____, [(engage in sexual contact, to wit: ____ with ____) (cause ____ to engage in sexual contact, to wit: ____, with ____) (cause sexual contact with or by ____, to wit: ____)] by causing grievous bodily harm upon (him)(her) (____), to wit: a (broken leg) (deep cut) (fractured skull) (____).

(c) *Aggravated sexual contact by using threats or placing in fear.*

In that ____ (personal jurisdiction data), did (at/on board—location) (subject-matter jurisdiction data, if required), on or about ____ 20 ____, [(engage in sexual contact, to wit: ____ with ____) (cause ____ to engage in sexual contact, to wit: ____, with ____) (cause sexual contact with or by ____, to wit: ____)] by [(threatening (him)(her)

(____)] [(placing(him)(her) (____) in fear] that (he)(she) (____) will be subjected to (death) (grievous bodily harm) (kidnapping) by ____.

(d) *Aggravated sexual contact by rendering another unconscious.*

In that ____ (personal jurisdiction data), did (at/on board—location) (subject-matter jurisdiction data, if required), on or about ____ 20 ____, [(engage in sexual contact, to wit: ____with ____) (cause ____ to engage in sexual contact, to wit: ____, with ____) (cause sexual contact with or by ____, to wit: ____)] by rendering (him)(her) (____) unconscious.

(e) *Aggravated sexual contact by administration of drug, intoxicant, or other similar substance.*

In that ____ (personal jurisdiction data), did (at/on board—location) (subject-matter jurisdiction data, if required), on or about ____ 20 ____, [(engage in sexual contact, to wit: ____ with ____) (cause ____ to engage in sexual contact, to wit: ____, with ____) (cause sexual contact with or by ____, to wit: ____)] by administering to (him)(her) (____) a drug, intoxicant, or other similar substance, (by force) (by threat of force) (without (his)(her) (____) knowledge or permission), and thereby substantially impaired (his)(her) (____) ability to [(appraise) (control)] [(his) (her)] conduct.

(6) *Aggravated sexual abuse of a child.*

In that ____ (personal jurisdiction data), did (at/on board—location) (subject-matter jurisdiction data, if required), on or about ____ 20 ____, engage in a lewd act, to wit: ____ with ____, a child who had not attained the age of 16 years.

(7) *Aggravated sexual contact with a child.*

(a) *Aggravated sexual contact with a child who has not attained the age of 12 years.*

In that ____ (personal jurisdiction data), did (at/on board—location) (subject-matter jurisdiction data, if required), on or about ____ 20 ____, [(engage in sexual contact, to wit: ____ with ____, a child who had not attained the age of 12 years) (cause ____ to engage in sexual contact, to wit: ____, with ____, a child who had not attained the age of 12 years) (cause sexual contact with or by ____, a child who had not attained the age of 12 years, to wit: ____)].

(b) *Aggravated sexual contact with a child who has attained the age of 12 years but has not attained the age of 16 years by using force.*

(i) *Aggravated sexual contact with a child who has attained the age of 12 years but has not attained the age of 16 years by use or display of dangerous weapon or object.*

In that ____ (personal jurisdiction data), did (at/on board—location) (subject-matter jurisdiction data, if required), on or about ____ 20 ____, [(engage in sexual contact, to wit: ____ with ____, a child who had attained the age of 12 years, but had not attained the age of 16 years) (cause ____ to engage in sexual contact, to wit: ____, with ____, a child who had attained the age of 12 years, but had not attained the age of 16 years) (cause sexual contact with or by ____, a child who had attained the age of 12 years, but had not attained the age of 16 years, to wit: ____)] by (using a dangerous weapon or object, to wit: ____ against (him)(her) (____)) (displaying a dangerous weapon or object, to wit: ____ to (him)(her) (____)).

(ii) *Aggravated sexual contact with a child who has attained the age of 12 years but has not attained the age of 16 years by suggestion of possession of dangerous weapon or object.*

In that ____ (personal jurisdiction data), did (at/on board—location) (subject-matter jurisdiction data, if required), on or about ____ 20____, [(engage in sexual contact, to wit: ____ with ____, a child who had attained the age of 12 years, but had not attained the age of 16 years) (cause ____ to engage in sexual contact, to wit: ____, with ____, a child who had attained the age of 12 years, but had not attained the age of 16 years) (cause sexual contact with or by ____, a child who had attained the age of 12 years, but had not attained the age of 16 years, to wit: ____)] by the suggestion of possession of a dangerous weapon or an object that was used in a manner to cause (him) (her) (____) to believe it was a dangerous weapon or object.

(iii) *Aggravated sexual contact with a child who has attained the age of 12 years but has not attained the age of 16 years by using physical violence, strength, power, or restraint to any person.*

In that ____ (personal jurisdiction data), did (at/on board—location) (subject-matter jurisdiction data, if required), on or about ____ 20____, [(engage in sexual contact, to wit: ____ with ____, a child who had not attained the age of 12 years, but had not attained the age of 16 years) (cause ____ to engage in sexual contact, to wit: ____, with ____, a child who had not attained the age of 12 years, but had not attained the age of 16 years) (cause sexual contact with or by ____, a child who had not attained the age of 12 years, but had not attained the age of 16 years, to wit: ____)] by using (physical violence) (strength) (power) (restraint applied to ____) sufficient that (he) (she) (____) could not avoid or escape the sexual conduct.

(c) *Aggravated sexual contact with a child who has attained the age of 12 years but has not attained the age of 16 years by causing grievous bodily harm.*

In that ____ (personal jurisdiction data), did (at/on board—location) (subject-matter jurisdiction data, if required), on or about ____ 20____, [(engage in sexual contact, to wit: ____ with ____, a child who had not attained the age of 12 years, but had not attained the age of 16 years) (cause ____ to engage in sexual contact, to wit: ____, with ____, a child who had not attained the age of 12 years, but had not attained the age of 16 years) (cause sexual contact with or by ____, a child who had not attained the age of 12 years, but had not attained the age of 16 years, to wit: ____)] by causing grievous bodily harm upon (him) (her) (____), to wit: a (broken leg) (deep cut) (fractured skull) (____).

(d) *Aggravated sexual contact with a child who has attained the age of 12 years but has not attained the age of 16 years by using threats or placing in fear.*

In that ____ (personal jurisdiction data), did (at/on board—location) (subject-matter jurisdiction data, if required), on or about ____ 20____, [(engage in sexual contact, to wit: ____ with ____, a child who had not attained the age of 12 years, but had not attained the age of 16 years) (cause ____ to engage in sexual contact, to wit: ____, with ____, a child who had not attained the age of 12 years, but had not attained the age of 16 years) (cause sexual contact with or by ____, a child who had not attained the age of 12 years, but had not attained the age of 16 years, to wit: ____)] by [threatening] [placing (him) (her) (____) in fear] that (he) (she) (____) will be subjected to (death) (grievous bodily harm) (kidnapping) by ____.

(e) *Aggravated sexual contact with a child who has attained the age of 12 years but has not attained the age of 16 years by rendering that child or another unconscious.*

In that ____ (personal jurisdiction data), did (at/on board—location) (subject-matter jurisdiction data, if required), on or about ____ 20____, [(engage in sexual contact, to wit: ____ with ____, a child who had not attained the age of 12 years, but had not attained the age of 16 years) (cause ____ to engage in sexual contact, to wit: ____, with ____, a child who had not attained the age of 12 years, but had not attained the age of 16 years) (cause sexual contact with or by ____, a child who had not attained the age of 12 years, but had not attained the age of 16 years, to wit:

____)] by rendering (him) (her) (____) unconscious.

(f) *Aggravated sexual contact with a child who has attained the age of 12 years but has not attained the age of 16 years by administration of drug, intoxicant, or other similar substance.*

In that ____ (personal jurisdiction data), did (at/on board—location) (subject-matter jurisdiction data, if required), on or about ____ 20____, [(engage in sexual contact, to wit: ____ with ____, a child who had not attained the age of 12 years but had not attained the age of 16 years) (cause ____ to engage in sexual contact, to wit: ____, with ____, a child who had not attained the age of 12 years but had not attained the age of 16 years) (cause sexual contact with or by ____, a child who had not attained the age of 12 years but had not attained the age of 16 years, to wit: ____)] by administering to (him) (her) (____) a drug, intoxicant, or other similar substance (by force) (by threat of force) (without (his) (her) (____) knowledge or permission), and thereby substantially impaired (his) (her) (____) ability to [(appraise) (control)] [(his) (her)] conduct.

(8) *Abusive sexual contact.*

(a) *Abusive sexual contact by using threats or placing in fear.*

In that ____ (personal jurisdiction data), did (at/on board—location) (subject-matter jurisdiction data, if required), on or about ____ 20____, [(engage in sexual contact, to wit: ____ with ____) (cause ____ to engage in sexual contact, to wit: ____, with ____) (cause sexual contact with or by ____, to wit: ____)] by [(threatening) (placing (him) (her) (____) in fear of)] [(physical injury to ____) (injury to ____'s property) (accusation of crime) (exposition of secret) (abuse of military position) (____)].

(b) *Abusive sexual contact by causing bodily harm.*

In that ____ (personal jurisdiction data), did (at/on board—location) (subject-matter jurisdiction data, if required), on or about ____ 20____, [(engage in sexual contact, to wit: ____ with ____) (cause ____ to engage in sexual contact, to wit: ____, with ____) (cause sexual contact with or by ____, to wit: ____)] by causing bodily harm upon (him) (her) (____), to wit: (____).

(c) *Abusive sexual contact by engaging in a sexual act with a person substantially incapacitated or substantially incapable of appraising the act, declining participation, or substantially incapable of communicating unwillingness.*

In that ____ (personal jurisdiction data), did (at/on board—location) (subject-matter jurisdiction data, if required), on or about ____ 20____, [(engage in sexual contact, to wit: ____ with ____) (cause ____ to engage in sexual contact, to wit: ____, with ____) (cause sexual contact with or by ____, to wit: ____)] while (he) (she) (____) was [substantially incapacitated] [substantially incapable of (appraising the nature of the sexual contact) (declining participation in the sexual contact) (communicating unwillingness to engage in the sexual contact)].

(9) *Abusive sexual contact with a child.*

In that ____ (personal jurisdiction data), did (at/on board—location) (subject-matter jurisdiction data, if required), on or about ____ 20____, [(engage in sexual contact, to wit: ____ with ____, a child who had attained the age of 12 years but had not attained the age of 16 years) (cause ____ to engage in sexual contact, to wit: ____, with ____, a child who had attained the age of 12 years but had not attained the age of 16 years) (cause sexual contact with or by ____, a child who had attained the age of 12 years but had not attained the age of 16 years, to wit: ____)].

(10) *Indecent liberties with a child.*

In that ____ (personal jurisdiction data), did, (at/on board—location) (subject-matter jurisdiction data, if required), on or about ____ 20____, (take indecent liberties) (engage in indecent conduct) in the physical presence of ____, a (female) (male) under 16 years of age, by (communicating the words: to wit: ____) (exposing one's private parts, to wit: ____) (____), with the intent to [(arouse) (appeal to) (gratify) the (sexual desire) of the ____ (or ____)] [(abuse) (humiliate) (degrade) ____].

(11) *Indecent act.*

In that ____ (personal jurisdiction data), did (at/on board—location) (subject-matter jurisdiction data, if required), on or about ____ 20____, wrongfully commit indecent conduct, to wit ____.

(12) *Forcible pandering.*

In that ____ (personal jurisdiction data), did (at/on board—location), (subject-matter jurisdiction data, if required), on or about ____ 20____, compel ____ to engage in [(a sexual act) (sexual contact) (lewd act), to wit: ____] for the purpose of receiving money or other compensation with ____ (a) person(s) to be directed to (him) (her) by the said ____.

(13) *Wrongful sexual contact.*

In that ____ (personal jurisdiction data), did (at/on board—location), (subject-matter jurisdiction data, if required), on or about ____ 20____, engage in sexual contact with ____, to wit: ____, and such sexual contact was without legal justification or lawful authorization and without the permission of ____.

(14) *Indecent exposure.*

In that ____ (personal jurisdiction data), did (at/on board—location), (subject-matter jurisdiction data, if required), on or about ____ 20____, intentionally (expose in an indecent manner (his) (her) (____) (____) while (at the barracks window) (in a public place) (____).

(e) Paragraph 50, Art. 124, Maiming, paragraph (e) is amended to read:

e. *Maximum Punishment.* Dishonorable discharge, forfeiture of all pay and allowances, and confinement for *20* years.

(f) Paragraph 51, Article 125, Sodomy, paragraph (d) is amended by deleting the following lesser included offenses under paragraph (d)(1)(b); (d)(2)(c); and (d)(3)(a):

(d)(1)(b) Article 134 indecent acts with a child under 16.

(d)(2)(c) Article 134 indecent assault.

(d)(3)(a) Article 134 indecent acts with another.

(g) Paragraph 51, Article 125, paragraph (d) is amended by adding at the end of paragraph d:

[Note: Consider lesser included offenses under Art. 120 depending on the factual circumstances in each case.]

(h) Paragraph 54, Art. 128, Assault, paragraph (b)(4)(a) is amended to read:

(4) *Aggravated Assault.*

(a) *Assault with a dangerous weapon or other means of force likely to produce death or grievous bodily harm.*

(i) That the accused attempted to do, offered to do, or did bodily harm to a certain person;

(ii) That the accused did so with a certain weapon, means, or force;

(iii) That the attempt, offer, or bodily harm was done with unlawful force or violence; and

(iv) That the weapon, means, or force was used in a manner likely to produce death or grievous bodily harm.

(Note: *Add any of the following as applicable.*)

(v) That the weapon was a loaded firearm.

(vi) *That the person was a child under the age of 16 years.*

(i) Paragraph 54, Art. 128, Assault, paragraph (b)(4)(b) is amended to read:

(4) *Aggravated Assault.*

(b) *Assault in which grievous bodily harm is intentionally inflicted.*

(i) That the accused assaulted a certain person;

(ii) That grievous bodily harm was thereby inflicted upon such person;

(iii) That the grievous bodily harm was done with unlawful force or violence; and

(iv) That the accused, at the time, had the specific intent to inflict grievous bodily harm.

(Note: *Add any of the following as applicable.*)

(v) That the injury was inflicted with a loaded firearm.

(vi) *That the person was a child under the age of 16 years.*

(j) Paragraph 54, Art. 128, Assault, paragraph (c)(4)(a) is amended by adding new paragraph (c)(4)(a)(v) after (c)(4)(a)(iv):

(4) *Aggravated Assault.*

(a) *Assault with a dangerous weapon or other means or force likely to produce death or grievous bodily harm.*

(v) When committed upon a child under 16 years of age. The maximum punishment is increased when aggravated assault with a dangerous weapon or means likely to produce death or grievous bodily harm is inflicted upon a child under 16 years of age. Knowledge that the person assaulted was under the age of 16 years is not an element of the offense.

(k) Paragraph 54, Art. 128, Assault, paragraph (c)(4)(b) is amended by adding new paragraph (c)(4)(b)(iv):

(4) *Aggravated Assault.*

(b) *Assault in which grievous bodily harm is intentionally inflicted.*

(iv) When committed upon a child under 16 years of age. The maximum punishment is increased when aggravated assault with intentional infliction of grievous bodily harm is inflicted upon a child under 16 years of age. Knowledge that the person assaulted was under the age of 16 years is not an element of the offense.

(l) Paragraph 54, Art. 128, Assault, paragraph (d)(6) is amended to read:

d. *Lesser included offenses.*

(6) *Assault with a dangerous weapon or other means or force likely to produce death or grievous bodily harm.* Article 128 simple assault; assault consummated by a battery; (*when committed upon a child under the age of 16 years—assault consummated by a battery upon a child under the age of 16 years*).

(m) Paragraph 54, Art. 128, Assault, paragraph (d)(7) is amended to read:

d. *Lesser included offenses.*

(7) *Assault in which grievous bodily harm is intentionally inflicted.* Article 128 simple assault; assault consummated by a battery; assault with a dangerous weapon; (*when committed upon a child under the age of 16 years—assault consummated by a battery upon a child under the age of 16 years*).

(n) Paragraph 54, Art. 128, Assault, paragraph (e)(8) is amended to read:

e. *Maximum punishment.*

(8) *Aggravated assault with a dangerous weapon or other means of force to produce death or grievous bodily harm.*

After current (a), *change (b) as follows below and current (b) becomes (c):*

(b) Aggravated assault with a dangerous weapon or other means of force to produce death or grievous bodily harm when committed upon a child under the age of 16 years. Dishonorable discharge, total forfeitures, and confinement for 5 years.

(o) Paragraph 54, Art. 128, Assault, paragraph (e)(9) is amended to read:

e. *Maximum punishment.*

(9) *Aggravated assault in which grievous bodily harm is intentionally inflicted.*

After current (a), *change (b) as follows below and current (b) becomes (c):*

(b) Aggravated assault in which grievous bodily harm is intentionally inflicted when committed upon a child under the age of 16 years. Dishonorable discharge, total forfeitures, and confinement for 8 years.

(p) Paragraph 54, Art. 128, Assault, paragraph (f)(8) is amended to read:

f. Sample specifications.

(8) *Assault, Aggravated with a dangerous weapon, means or force.*

In that ____ (personal jurisdiction data), did, (at/on board location)(subject matter jurisdiction data, if required), on or about ____ 20____, commit an assault upon ____ (*a child under the age of 16 years*) by (shooting) (pointing) (striking) (cutting) (____) (at him/her) (him/her) (in) (on)(the____) with (a dangerous weapon) a (means) (force) likely to produce death or grievous bodily harm), to wit: A (loaded firearm) (pickax) (bayonet) (club) (____).

(q) Paragraph 54, Art. 128, Assault, paragraph (f)(8) is amended to read:

f. *Sample specifications.*

(9) *Assault, aggravated inflicting grievous bodily harm.*

In that ____ (personal jurisdiction data), did, (at/on board location) (subject matter jurisdiction data, if required), on or about ____ 20____, commit an assault upon (*a child under the age of 16 years*) by (shooting) (striking)(cutting) (____) (him/her) (on) the with a (loaded firearm) (club) (rock) (brick) (____ and did thereby intentionally inflict grievous bodily harm upon him/her, to wit: A (broken leg) (deep cut)(fractured skull) (____).

(r) Paragraph 64, Article 134 Assault w/intent to commit murder, voluntary, manslaughter, rape, robbery, sodomy, arson, burglary, or housebreaking, paragraph (c)(4), 1st sentence, is amended to read:

(c)(4) Assault with intent to commit rape. *In assault with intent to commit rape, the accused must have intended to complete the offense.*

(s) Paragraph 64, Article 134 Assault w/intent to commit murder, voluntary, manslaughter, rape, robbery, sodomy, arson, burglary, or housebreaking, is amended by deleting the following lesser included offense under paragraph (d)(3)(b):

(d)(3)(b) Article 134 indecent assault.

(t) New paragraph 68a, Article 134—(Child Endangerment) is inserted:

68a. Article 134—(Child Endangerment)

a. Text. See paragraph 60.

b. Elements.

Child Endangerment

(1) That the accused had a duty for the care of a certain child;

(2) That the child was under the age of 16 years;

(3) That the accused endangered the child's mental or physical health, safety, or welfare through design or culpable negligence;

and

(4) That, under the circumstances, the conduct of the accused was to the prejudice of good order and discipline in the armed forces or was of a nature to bring discredit upon the armed forces.

c. Explanation.

(1) In general. This offense is intended to prohibit and therefore deter child endangerment through design or culpable negligence.

(2) Design. Design means on purpose, intentionally, or according to plan and requires specific intent to endanger the child.

(3) Culpable negligence. Culpable negligence is a degree of carelessness greater than simple negligence. It is a negligent act or omission accompanied by a culpable disregard for the foreseeable consequences to others of that act or omission. In the context of this offense, culpable negligence may include acts that, when viewed in the light of human experience, might foreseeably result in harm to a child, even though such harm would not necessarily be the natural and probable consequences of such acts. In this regard, the age and maturity of the child, the conditions surrounding the neglectful conduct, the proximity of assistance available, the nature of the environment in which the child may have been left, the provisions made for care of the child, and the location of the parent or adult responsible for the child relative to the location of the child, among others, may be considered in determining whether the conduct constituted culpable negligence.

(4) Harm. Actual physical or mental harm to the child is not required. The offense requires that the accused's

actions reasonably could have caused physical or mental harm or suffering. However, if the accused's conduct does cause actual physical or mental harm, the potential maximum punishment increases. See Paragraph 54(c)(4)(a)(iii) for an explanation of ''grievous bodily harm''.

(4) Endanger. ''Endanger'' means to subject one to reasonable probability of harm.

(5) Age of victim as a factor. While this offense may be committed against any child under 16, the age of the victim is a factor in the culpable negligence determination. Leaving a teenager alone for an evening may not be culpable (or even simple) negligence; leaving an infant or toddler for the same period might constitute culpable negligence. On the other hand, leaving a teenager without supervision for an extended period while the accused was on temporary duty outside commuting distance might constitute culpable negligence.

(6) Duty required. The duty of care is determined by the totality of the circumstances and may be established by statute, regulation, legal parent-child relationship, mutual agreement, or assumption of control or custody by affirmative act. When there is no duty of care of a child, there is no offense under this paragraph. Thus, there is no offense when a stranger makes no effort to feed a starving child or an individual/neighbor not charged with the care of a child does not prevent the child from running and playing in the street.

d. Lesser included offenses.

(1) Child Endangerment by Design.

Article 134—Child Endangerment by culpable negligence.

Article 80—Attempts.

e. Maximum punishment.

i. Endangerment by design resulting in grievous bodily harm. Dishonorable discharge, forfeiture of all pay and allowances, and confinement for 8 years.

ii. Endangerment by design resulting in harm. Dishonorable discharge, forfeiture of all pay and allowances, and confinement for 5 years.

iii. Other cases by design. Dishonorable discharge, forfeiture of all pay and allowances and confinement for 4 years.

iv. Endangerment by culpable negligence resulting in grievous bodily harm. Dishonorable discharge, forfeiture of all pay and allowances, and confinement for 3 years.

v. Endangerment by culpable negligence resulting in harm. Bad-conduct discharge, forfeiture of all pay and allowances, and confinement for 2 years.

vi. Other cases by culpable negligence. Bad-conduct discharge, forfeiture of all pay and allowances, and confinement for 1 year.

f. Sample specification.

i. Resulting in grievous bodily harm.

In that ____ (personal jurisdiction data), (at/on board-location) (subject matter jurisdiction data, if required) on or about ____, 20 ____, had a duty for the care of ____, a child under the age of 16 years and did endanger the (mental health) (physical health) (safety) (welfare) of said ____, by (leaving the said ____ unattended in his quarters for over ____ hours/days with no adult present in the home) (by failing to obtain medical care for the said _____'s diabetic condition) (____), and that such conduct (was by design)(constituted culpable negligence) (which resulted in grievous bodily harm, to wit:) (broken leg) (deep cut) (fractured skull) (____)).

ii. Resulting in harm.

In that _____ (personal jurisdiction data), (at/on board-location) (subject matter jurisdiction data, if required) on or about _____, 20 ____, had a duty for the care of _____, a child under the age of 16 years, and did endanger the (mental health) (physical health) (safety) (welfare) of said _____, by (leaving the said _____ unattended in his quarters for over ____ hours/days with no adult present in the home) (by failing to obtain medical care for the said _____'s diabetic condition) (_____), and that such conduct (was by design) (constituted culpable negligence)(which resulted in (harm, to wit:) (a black eye) (bloody nose) (minor cut) (_____)).

iii. Other cases.

In that _____ (personal jurisdiction data), (at/on board-location)(subject matter jurisdiction data, if required) on or about _____, 20 ____, was responsible for the care of _____, a child under the age of 16 years, and did endanger the (mental health) (physical health) (safety) (welfare) of said _____, by (leaving the said _____ unattended in his quarters for over ____ hours/days with no adult present in the home) (by failing to obtain medical care for the said _____'s diabetic condition) (_____), and that such conduct (was by design) (constituted culpable negligence).

(u) Paragraph 63, Article 134 Assault, Indecent is deleted.

(v) Paragraph 87, Indecent acts or liberties with a child is deleted.

(w) Paragraph 88, Indecent Exposure is deleted.

(x) Paragraph 90, Indecent acts with another is deleted.

(y) Paragraph 89, Indecent language, paragraph (c), is amended to read:

c. Explanation. ''Indecent'' language is that which is grossly offensive to modesty, decency, or propriety, or shocks the moral sense, because of its vulgar, filthy, or disgusting nature, or its tendency to incite lustful thought. Language is indecent if it tends reasonably to corrupt morals or incite libidinous thoughts. The language must violate community standards. *See paragraph 45 if the communication was made in the physical presence of a child.*

____(u) Paragraph 97. Article 134 Pandering and Prostitution is amended by deleting ''compel'' throughout subsection (b)(2) to read:

b. Elements

(2) Pandering by inducing, enticing, or procuring act of prostitution.

(a) That the accused induced, enticed, or procured a certain person to engage in an act of sexual intercourse for hire and reward with a person to be directed to said person by the accused;

(b) That this inducing, enticing, or procuring was wrongful;

(c) That, under the circumstances, the conduct of the accused was to the prejudice of good order and discipline in the armed forces or was of a nature to bring discredit upon the armed forces.

(v) Paragraph 97. Article 134 Pandering and Prostitution is amended by deleting ''compel'' throughout the subtitle and subsection (f)(2) to read:

(2) Inducing, enticing, or procuring act of prostitution.

In that _____ (personal jurisdiction data), did (at/on board-location) (subject-matter jurisdiction data, if required), on or about _____ 20 ____, wrongfully (induce) (entice) (procure) ____ to engage in (an act) (acts) of (sexual intercourse for hire and reward) with persons to be directed to him/her by the said _____.

These amendments shall take effect on **[30 days after signature]**.

(a) Nothing in these amendments shall be construed to make punishable any act done or omitted prior to **[30 days after signature]** that was not punishable when done or omitted.

(b) Nothing in these amendments shall be construed to invalidate any nonjudicial punishment proceedings, restraint, investigation, referral of charges, trial in which arraignment occurred, or other action begun prior to [30 days after signature], and any such nonjudicial punishment, restraint, investigation, referral of charges, trial, or other action may proceed in the same manner and with the same effect as if these amendments had not been prescribed.

Changes to the Discussion Accompanying the Manual for Courts Martial, United States

(a) Amend the Discussion accompanying R.C.M. 810(d) to read as follows:

''*The trier of fact is not bound by the sentence previously adjudged or approved at a rehearing. The members should not be advised of the sentence limitation under this rule. See R.C.M. 1005(e)(1). An appropriate sentence on a retried or reheard offense should be adjudged without regard to any credit to which the accused may be entitled. See R.C.M. 103(2) and R.C.M. 103(3) as to when a rehearing may be a capital case.*''

(b) Insert the following new Discussion section after R.C.M. 916(j):

Discussion

The statutory text of Article 120(r) specifically limits the affirmative defense for mistake of fact as to consent to Article 120(a) rape, Article 120(c) aggravated sexual assault, Article 120(e) aggravated sexual contact, and Article 120(h) abusive sexual contact. For all other offenses under Article 120, consent is not an issue and mistake of fact as to consent is not an affirmative defense.

(c) Amend the Discussion accompanying R.C.M. 916 (j)(2) in the 3rd paragraph, 1st sentence, to read:

Examples of offenses in which the accused's intent or knowledge is immaterial include: *Rape of a child, aggravated sexual contact with a child, or indecent liberty with a child* (if the victim is under 12 years of age, knowledge or belief as to age is immaterial).

(d) Amend the Discussion accompanying R.C.M. 917(c) by adding the following sentence after the last sentence in the Discussion:

''*See R.C.M. 1102 (b)(2) for military judge's authority, upon motion or sua sponte, to enter finding of not guilty after findings but prior to authentication of the record.*''

(d) Amend the Discussion accompanying R.C.M. 1005(e)(1) to read as follows:

''*The maximum punishment that may be adjudged is the lowest of the total permitted by the applicable paragraph(s) in Part IV for each separate offense of which the accused was convicted (see also R.C.M. 1003 concerning additional limits on punishments and additional punishments which may be adjudged) or the jurisdictional limit of the court-martial (see R.C.M. 201(f) and R.C.M. 1301(d)). See also discussion to R.C.M. 810(d). The military judge may upon request or when otherwise appropriate instruct on lesser punishments. See R.C.M. 1003. If an additional punishment is authorized under R.C.M. 1003(d), the members must be informed of the basis for the increased punishment.*

''*A carefully drafted sentence worksheet ordinarily should be used and should include reference to all authorized punishments in the case.*''

(e) A Discussion accompanying R.C.M. 1107(f)(5)(A) is inserted to read as follows:

''*In approving a sentence not in excess of or more severe than one previously approved (see R.C.M. 810(d)), a convening authority is prohibited from approving a punitive discharge more severe than one formerly approved, e.g., a convening authority is prohibited from approving a dishonorable discharge if a bad conduct discharge had formerly been approved. Otherwise, in approving a sentence not in excess of or more severe than one previously imposed, a convening authority is not limited to approving the same or lesser type of 'other punishments' formerly approved.*''

Changes to Appendix 12, Maximum Punishment Chart

Appendix 12 is amended as follows:

Amend Article 120 by deleting the following:

Rape
Carnal Knowledge
With child at least 12
With child under the age of 12

Amend Article 120 by inserting the following:			
Rape and Rape of a Child	Death, DD, BCD	Life	Total.
Aggravated Sexual Assault	DD, BCD	30 yrs	Total.
Aggravated Sexual Assault of a Child	DD, BCD	20 yrs	Total.
Aggravated Sexual Abuse of a Child	DD, BCD	20 yrs	Total.
Aggravated Sexual Contact	DD, BCD	20 yrs	Total.
Aggravated Sexual Contact with a Child	DD, BCD	20 yrs	Total.
Abusive Sexual Contact with a Child	DD, BCD	15 yrs	Total.
Indecent Liberty with a Child	DD, BCD	15 yrs	Total.
Abusive Sexual Contact	DD, BCD	7 yrs	Total.
Indecent Act	DD, BCD	5 yrs	Total.
Forcible Pandering	DD, BCD	5 yrs	Total.
Wrongful Sexual Contact	DD, BCD	1 yr	Total.
Indecent Exposure	DD, BCD	1 yr	Total.
Amend Article 124 to read:			
Maiming	DD, BCD	20 yrs	Total.
Amend Article 128 by inserting the following:			
Aggravated assault with a dangerous weapon or other means of force to produce death or grievous bodily harm when committed upon a child under the age of 16 years.	DD, BCD	5 yrs	Total.
Aggravated assault in which grievous bodily harm is intentionally inflicted when committed upon a child under the age of 16 years.	DD, BCD	8 yrs	Total.
Amend Article 134 by inserting:			
Child Endangerment:			
Endangerment by design resulting in grievous bodily harm	DD, BCD	8 yrs	Total.
Endangerment by design resulting in harm	DD, BCD	5 yrs	Total.
Other cases by design	DD, BCD	4 yrs	Total.
Endangerment by culpable negligence resulting in grievous bodily harm	DD, BCD	3 yrs	Total.
Endangerment by culpable negligence resulting in harm	BCD	2 yrs	Total.
Other cases by culpable negligence	BCD	1 yr	Total.
Amend Article 134 by deleting the following:			
Assault—Indecent.			
Indecent Acts of Liberties with a Child.			

Indecent Exposure.
Indecent Acts with Another.

Changes to Appendix 21, Analysis of Rules for Courts Martial

(a) Amend the Analysis accompanying R.C.M. 916(b) by inserting the following paragraph at the end thereof:

200 Amendment. Changes to this paragraph, deleting ''carnal knowledge'', are based on section 552 of the National Defense Authorization Act for Fiscal Year 2006, Public Law 109–163, 6 January 2006, which supersedes the previous paragraph 45, Rape and Carnal Knowledge, in its entirety and replaces paragraph 45 with Rape, sexual assault and other sexual misconduct.

(b) Amend the Analysis accompanying R.C.M. 916(j)(2) by inserting the following paragraph at the end thereof:

200 Amendment. Changes to this paragraph, deleting ''carnal knowledge'' and consistent language, are based on section 552 of the National Defense Authorization Act for Fiscal Year 2006, Public Law 109–163, 6 January 2006, which supersedes the previous paragraph 45, Rape and Carnal Knowledge, in its entirety and replaces paragraph 45 with Rape, sexual assault and other sexual misconduct.

(c) Insert a new Analysis section to accompany new subparagraph R.C.M. 916(j)(3) at the end of the analysis discussing subsection RCM 916(j) :

200 Amendment. This paragraph is new and is based on the mistake of fact defense incorporated in section 552 of the National Defense Authorization Act for Fiscal Year 2006, Public Law 109–163, 6 January 2006, which supersedes the previous paragraph 45, Rape and Carnal Knowledge, in its entirety and replaces paragraph 45 with Rape, sexual assault and other sexual misconduct.

(d) Amend the Analysis accompanying R.C.M. 920(e) by inserting the following paragraph at the end thereof:

200 Amendment. Changes to this paragraph, deleting ''carnal knowledge'' and consistent language, are based on section 552 of the National Defense Authorization Act for Fiscal Year 2006, Public Law 109–163, 6 January 2006, which supersedes the previous paragraph 45, Rape and Carnal Knowledge, in its entirety and replaces paragraph 45 with Rape, sexual assault and other sexual misconduct.

(e) Amend the Analysis accompanying R.C.M. 1004(c) by inserting the following paragraph at the end thereof :

200 Amendment. Changes to this paragraph adding sexual offenses other than rape are based on subsection (d) of section 552 of the National Defense Authorization Act for Fiscal Year 2006, Public Law 109–163, 6 January 2006, which supersedes the previous paragraph 45, Rape and Carnal Knowledge, in its entirety and replaces paragraph 45 with Rape, sexual assault and other sexual misconduct.

(f) Amend the analysis accompanying R.C.M. 1102(d) by inserting the following paragraph at the end thereof:

200 Amendment. For purposes of this rule, the list of appropriate reviewing authorities included in the 1994 amendment includes any court authorized to review cases on appeal under the UCMJ.

Changes to Appendix 22, Analysis of the Military Rules of Evidence

(a) Amend the Analysis accompanying MRE 412, Relevance of alleged victim's sexual behavior or sexual predisposition, by inserting the following paragraph at the end thereof:

200 Amendment. This amendment is intended to aid practitioners in applying the balancing test of MRE 412. Specifically, the amendment clarifies: (1) That under MRE 412, the evidence must be relevant for one of the purposes highlighted in subdivision (b); (2) that in conducting the balancing test, the inquiry is whether the probative value of the evidence outweighs the danger of unfair prejudice to the victim's privacy; and (3) that even if the evidence is admissible under MRE 412, it may still be excluded under MRE 403. The proposed changes highlight current practice. See U.S. v. *Banker, 60 M.J. 216, 223 (2004) (Citing ''It would be illogical if the judge were to evaluate evidence 'offered by the accused' for unfair prejudice to the accused. Rather, in the context of this rape shield statute, the prejudice in question is, in part, that to the privacy interests of the alleged victim. Sanchez, 44 M.J. at 178 (''[I]n determining admissibility there must be a weighing of the probative value of the evidence against the interest of shielding the victim's privacy.'').''*

Moreover, the amendment clarifies that MRE 412 applies in all cases involving a sexual offense wherein the person against whom the evidence is offered can reasonably be characterized as a ''victim of the alleged sexual offense.'' Thus, the rule applies to: ''consensual sexual offense'', ''nonconsensual sexual offenses''; sexual offenses specifically proscribed under the UCMJ, e.g., rape, aggravated sexual assault, etc.; those federal sexual offenses DoD is able to prosecute under clause 3 of Article 134, U.C.M.J., e.g., 18 U.S.C. § 2252A (possession of child pornography); and state sexual offenses DoD is able to assimilate under the Federal Assimilative Crimes Act (18 U.S.C. 13).

(b) Amend the analysis accompanying M.R.E. 503(b) by inserting the following paragraph at the end thereof:

''200 Amendment: The previous subsection (2) of MRE 503(b) was renumbered subsection (3) and the new subsection (2) was inserted to define the term ''clergyman's assistant.''

(c) Amend the Analysis accompanying M.R.E. 504 by inserting the following paragraph at the end thereof:

''200 Amendment: (d) Definition. Rule 504(d) modifies the rule and is intended to afford additional protection to children. Previously, the term ''a child of either,'' referenced in Rule 504(c)(2)(A), did not include a ''de facto'' child or a child who is under the physical custody of one of the spouses but lacks a formal legal parent-child relationship with at least one of the spouses. See U.S. v. *McCollum, 58 M.J. 323 (C.A.A.F. 2003). Prior to this amendment, an accused could not invoke the spousal privilege to prevent disclosure of communications regarding crimes committed against a child with whom he or his spouse had a formal, legal parent-child relationship; however, the accused could invoke the privilege to prevent disclosure of communications where there was not a formal, legal parent-child relationship. This distinction between legal and ''de facto'' children resulted in unwarranted discrimination among child victims and ran counter to the public policy of protecting children. Rule 504(d) recognizes the public policy of protecting children by addressing disparate treatment among child victims entrusted to another. The ''marital communications privilege * * * should not prevent a 'properly outraged spouse with knowledge from testifying against a perpetrator' of child abuse within the home regardless of whether the child is part of that family.'' U.S.* v. *McCollum, 58 M.J. 323, 342, fn.6 (C.A.A.F. 2003) (citing U.S. v. Bahe, 128 F.3d 1440, 1446 (10th Cir. 1997)).*

Changes to Appendix 23, Analysis of Punitive Articles

(a) The Analysis accompanying Article 118, Murder, is amended by inserting the following:

43. Article 118 Murder

a. *Text.*

b. *Elements.*

200 Amendment. Paragraph (4) of the text and elements has been amended for consistency with the changes to Article 118 under section 552 of the National Defense Authorization Act for Fiscal Year 2006, Public Law 109–163, 6 January 2006. See subsection (d) of Section 552.

(b) The Analysis accompanying Article 119, Manslaughter, is amended by inserting the following:

44. Article 119 Manslaughter

b. *Elements.*

200 Amendment. Paragraph (4) of the elements has been amended for consistency with the changes to Article 118 under section 552 of the National Defense Authorization Act for Fiscal Year 2006, Public Law 109–163, 6 January 2006. See subsection (d) of Section 552.

(c) The Analysis accompanying Article 120, Rape, Sexual Assault, and other Sexual Misconduct, is amended by inserting the following:

45. Article 120 Rape, Sexual Assault, and other Sexual Misconduct

200 Amendment. Changes to this paragraph are contained in Div. A. Title V. Subtitle E, section 552(a)(1) of the National Defense Authorization Act for Fiscal Year 2006, Public Law 109–163, 119 Stat. 3257 (6 January 2006), which supersedes the previous paragraph 45, Rape and Carnal Knowledge, in its entirety and replaces paragraph 45 with Rape, sexual assault and other sexual misconduct. In accordance with section 552(c) of that Act, Public Law 109 163, 119 Stat. 3263, the amendment to the Article applies only with respect to offenses committed on or after 1 October 2007.

Nothing in these amendments invalidates any nonjudicial punishment proceeding, restraint, investigation, referral of charges, trial in which arraignment occurred, or other action begun prior to 1 October 2007. Any such nonjudical punishment proceeding, restraint, investigation, referral of charges, trial in which arraignment occurred, or other action may proceed in the same manner and with the same effect as if these amendments had not been prescribed.

This new Article 120 consolidates several sexual misconduct offenses and is generally based on the Sexual Abuse Act of 1986, 18 U.S.C. Sections 2241–2245. The following is a list of offenses that have been replaced by this new paragraph 45:

(1) Paragraph 63, 134 Assault—Indecent, has been replaced in its entirety by three new offenses under paragraph 45. See subsections (e) Aggravated Sexual Contact, (h) Abusive Sexual Contact, and (m) Wrongful Sexual Contact.

(2) Paragraph 87, 134 Indecent Acts or Liberties with a Child, has been replaced in its entirety by three new offenses under paragraph 45. See subsections (g) Aggravated Sexual Contact with a Child, (i) Abusive Sexual Contact with a Child, and (j) Indecent Liberty with a Child.

(3) Paragraph 88, Article 134 Indecent Exposure, has been replaced in its entirety by a new offense under paragraph 45. See subsection (n) Indecent Exposure.

(4) Paragraph 90, Article 134 Indecent Acts with Another, has been replaced in its entirety by a new offense under paragraph 45. See subsection (k) Indecent Act.

(5) Paragraph 97, Article 134 Pandering and Prostitution, has been amended. The act of compelling another person to engage in an act of prostitution with another person will no longer be an offense under paragraph 97 and has been replaced by a new offense under paragraph 45. See subsection (l), Forcible Pandering.

c. Explanation. Subparagraph (3), definition of ''indecent'', is taken from paragraphs 89.c and 90.c of the Manual (2005 ed.) and is intended to consolidate the definitions of ''indecent,'' as used in the former offenses under Article 134 of ''Indecent acts or liberties with a child,'' ''Indecent exposure,'' and ''Indecent acts with another,'' formerly at paragraphs 87, 88, and 90 of the 2005 Manual, and ''Indecent language,'' at paragraph 89. The application of this single definition of ''indecent'' to the offenses of ''Indecent liberty with a child,'' ''Indecent act,'' and ''Indecent exposure'' under Article 120 is consistent with the construction given to the former Article 134 offenses in the 2005 Manual that were consolidated into Article 120. See e.g. United States v. *Negron, 60 M.J. 136 (C.A.A.F. 2004).*

e. Additional Lesser Included Offenses. The test to determine whether an offense is factually the same as another offense, and therefore lesser-included to that offense, is the ''elements'' test. United States v. *Foster, 40 M.J. 140, 142 (C.M.A.1994). Under this test, the court considers ''whether each provision requires proof of a fact which the other does not.'' Blockburger, 284 U.S. at 304, 52 S.Ct. 180. Rather than adopting a literal application of the elements test, the Court stated that resolution of lesser-included claims ''can only be resolved by lining up elements realistically and determining whether each element of the supposed 'lesser' offense is rationally derivative of one or more elements of the other offense—and vice versa.'' Foster, 40 M.J. at 146. Whether an offense is a lesser-included offense is a matter of law that the Court will consider de novo. United States* v. *Palagar,* 56 M.J. 294, 296 (C.A.A.F. 2002).

f. Maximum punishment. See 1995 Amendment regarding maximum punishment of death.

(d) The analysis accompanying Article 124, Maiming, is amended by inserting the following at the end of current analysis paragraph:

e. Maximum punishment. 200 amendment. The maximum punishment for the offense of maiming was increased from 7 years confinement to 20 years confinement, consistent with the federal offense of maiming, 18 U.S.C. 114.

(e) The Analysis accompanying Article 125, Sodomy, is amended by inserting the following:

d. Lesser included offenses.

200 Amendment.

The former Paragraph 87, (1)(b), Article 134 Indecent Acts or Liberties with a Child has been replaced in its entirety by paragraph 45.

The former Paragraph 63, (2)(c), Article 134 Assault—Indecent, has been replaced in its entirety by paragraph 45.

The former Paragraph 90(3)(a), Article 134 Indecent Acts with Another, has been replaced in its entirety by paragraph 45.

Lesser included offenses under Article 120 should be considered depending on the factual circumstances in each cases.

(f) The analysis to Article 128, Assault, is amended by inserting the following at the end of current analysis paragraph:

e. Maximum punishment. 200 amendment. The maximum punishments for some aggravated assault offenses were established to recognize the increased severity of such offenses when children are the victims. These maximum punishments are consistent with the maximum punishments of the Article 134 offense of Child Endangerment, established in 200.

(g) The Analysis accompanying Article 134, Assault indecent, is amended by inserting the following:

63. Article 134 Assault-Indecent

200 Amendment. This paragraph has been replaced in its entirety by paragraph 45. See Article 120 (e) Aggravated Sexual Contact, (h) Abusive Sexual Contact, and (m) Wrongful Sexual Contact.

(h) The Analysis accompanying Article 134-Assault-with intent to commit murder, voluntary manslaughter, rape, robbery, sodomy, arson, burglary, or housebreaking, is amended by inserting the following:

64. Article 134 Assault-With Intent to Commit Murder, Voluntary Manslaughter, Rape, Robbery, Sodomy, Arson, Burglary, or Housebreaking

200 Amendment. This paragraph has been amended for consistency with the changes to Article 118 under section 552 of the National Defense Authorization Act for Fiscal Year 2006, Public Law 109–163, 6 January 2006. See subsection (d) of Section 552.

(i) The analysis to Article 134 is amended by inserting the following:

68a. Article 134 (Child Endangerment)

200 Amendment. This offense is new to the Manual for Courts Martial. Child neglect was recognized in U.S. v. *Vaughan, 58 M.J. 29 (C.A.A.F. 2003). It is based on military custom and regulation as well as a majority of state statutes and captures the essence of child neglect, endangerment, and abuse.*

(j) The Analysis accompanying Article 134-Indecent acts with a child, is amended by inserting the following:

87. Article 134 Indecent Acts With a Child

200 Amendment. This paragraph has been replaced in its entirety by paragraph 45. See Article 120(g) Aggravated Sexual Contact with a Child, (i) Abusive Sexual Contact with a Child, and (j) Indecent Liberty with Child.

(k) The Analysis accompanying Article 134-Indecent Exposure is amended by inserting the following:

88. Article 134 Indecent Exposure

200 Amendment. This paragraph has been replaced in its entirety by paragraph 45. See Article 120(n) Indecent Exposure.

(l) The Analysis accompanying Article 134-Indecent Exposure is amended by inserting the following:

88. Article 134 Indecent Exposure

200 Amendment. This paragraph has been replaced in its entirety by paragraph 45. See Article 120(n) Indecent Exposure.

(j) The Analysis accompanying Article 134-Pandering and Prostitution is amended by inserting the following:

97. Article 134 Pandering and Prostitution

200 Amendment. This paragraph has been amended. The act of compelling another person to engage in an act of prostitution with another person will no longer be punished under paragraph 97 and has been replaced by a new offense under paragraph 45. See Article 120(l) Forcible Pandering.

Dated: August 4, 2006.

L.M. Bynum,

OSD Federal Register Liaison Officer, DoD.

[FR Doc. 06–6817 Filed 8–9–06; 8:45 am]

BILLING CODE 5001–06–P

DEPARTMENT OF EDUCATION

Notice of Proposed Information Collection Requests

AGENCY: Department of Education.

ACTION: Notice of Proposed Information Collection Requests.

SUMMARY: The IC Clearance Official, Regulatory Information Management Services, Office of Management, invites comments on the proposed information collection requests as required by the Paperwork Reduction Act of 1995.

DATES: An emergency review has been requested in accordance with the Act (44 U.S.C. Chapter 3507 (j)), since public harm is reasonably likely to result if normal clearance procedures are followed. Approval by the Office of Management and Budget (OMB) has been requested by August 17, 2006.

ADDRESSES: Written comments regarding the emergency review should be addressed to the Office of Information and Regulatory Affairs, Attention: Rachel Potter, Desk Officer, Department of Education, Office of Management and Budget; 725 17th Street, NW., Room 10222, New Executive Office Building, Washington, DC 20503 or faxed to (202) 395–6974.

SUPPLEMENTARY INFORMATION: Section 3506 of the Paperwork Reduction Act of 1995 (44 U.S.C. Chapter 35) requires that the Director of OMB provide interested Federal agencies and the public an early opportunity to comment on information collection requests. The Office of Management and Budget (OMB) may amend or waive the requirement for public consultation to the extent that public participation in the approval process would defeat the purpose of the information collection, violate State or Federal law, or substantially interfere with any agency's ability to perform its statutory obligations. The IC Clearance Official, Regulatory Information Management Services, Office of Management, publishes this notice containing proposed information collection requests at the beginning of the Departmental review of the information collection. Each proposed information collection, grouped by office, contains the following: (1) Type of review requested, e.g., new, revision, extension, existing or reinstatement; (2) Title; (3) Summary of the collection; (4) Description of the need for, and proposed use of, the information; (5) Respondents and frequency of collection; and (6) Reporting and/or Recordkeeping burden. ED invites public comment.

The Department of Education is especially interested in public comment addressing the following issues: (1) Is this collection necessary to the proper functions of the Department; (2) will this information be processed and used in a timely manner, (3) is the estimate of burden accurate; (4) how might the Department enhance the quality, utility, and clarity of the information to be collected, and (5) how might the Department minimize the burden of this collection on respondents, including through the use of information technology.

Dated: August 8, 2006.

Angela C. Arrington,

IC Clearance Official, Regulatory Information Management Services, Office of Management.

Office of Postsecondary Education

Type of Review: New.

Title: Hurricane Education Recovery Awards.

Abstract: The Emergency Supplemental Appropriations Act for Defense, the Global War on Terror and Hurricane Recovery, 2006 (Pub. L. 109–234) provides $50 million in awards to institutions of higher education, as defined in section 102 of the HEA, that are located in an area in which a major disaster was declared in accordance with section 401 of the Robert T. Stafford Disaster Relief and Emergency Assistance Act related to hurricanes in the Gulf of Mexico in calendar year 2005, and that were forced to close, relocate or significantly curtail their activities as a result of damage directly caused by the hurricanes. These Hurricane Education Recovery Awards can only be used to defray expenses, including expenses that would have been covered by revenue lost as a direct result of a hurricane, expenses already incurred, and construction expenses directly related to damage resulting from the hurricanes.

Additional Information: The Department needs to collect this information quickly in order to make timely grant awards for FY 2006, which ends September 30, 2006. There is a limited amount of appropriations available at this time, so realistic applications will be favored. Congress has appropriated $50,000,000.

Frequency: One time submission.

Affected Public: Not-for-profit institutions; Businesses or other for-profit; State, Local, or Tribal Gov't, SEAs or LEAs.

Reporting and Recordkeeping Hour Burden: Responses: 50.

Burden Hours: 50.

Requests for copies of the proposed information collection request may be accessed from *http://edicsweb.ed.gov,* by selecting the ''Browse Pending Collections'' link and by clicking on link number 3169. When you access the information collection, click on ''Download Attachments'' to view. Written requests for information should be addressed to U.S. Department of Education, 400 Maryland Avenue, SW., Potomac Center, 9th Floor, Washington, DC 20202–4700. Requests may also be electronically mailed to the Internet address *ICDocketMgr@ed.gov* or faxed to 202–245–6623. Please specify the complete title of the information collection when making your request.

Comments regarding burden and/or the collection activity requirements should be electronically mailed to *ICDocketMgr@ed.gov.* Individuals who use a telecommunications device for the deaf (TDD) may call the Federal Information Relay Service (FIRS) at 1–800–877–8339.

[FR Doc. 06–6851 Filed 8–8–06; 1:07 pm]

BILLING CODE 4000–01–P

DEPARTMENT OF EDUCATION

Notice of Proposed Information Collection Requests

AGENCY: Department of Education.

SUMMARY: The Leader, Information Policy and Standards Team, Regulatory Information Management Services, Office of Management, invites comments on the proposed information collection requests as required by the Paperwork Reduction Act of 1995.

DATES: Interested persons are invited to submit comments on or before October 10, 2006.

SUPPLEMENTARY INFORMATION: Section 3506 of the Paperwork Reduction Act of 1995 (44 U.S.C. Chapter 35) requires that the Office of Management and Budget (OMB) provide interested Federal agencies and the public an early opportunity to comment on information collection requests. OMB may amend or waive the requirement for public consultation to the extent that public participation in the approval process would defeat the purpose of the information collection, violate State or Federal law, or substantially interfere with any agency's ability to perform its statutory obligations. The Leader, Information Policy and Standards Team, Regulatory Information Management Services, Office of Management, publishes that notice containing proposed information collection requests prior to submission of these requests to OMB. Each proposed information collection, grouped by office, contains the following: (1) Type of review requested, *e.g.* new, revision, extension, existing or reinstatement; (2) Title; (3) Summary of the collection; (4) Description of the need for, and proposed use of, the information; (5) Respondents and frequency of collection; and (6) Reporting and/or Recordkeeping burden. OMB invites public comment.

The Department of Education is especially interested in public comment addressing the following issues: (1) Is this collection necessary to the proper functions of the Department; (2) will this information be processed and used in a timely manner; (3) is the estimate of burden accurate; (4) how might the Department enhance the quality, utility, and clarity of the information to be collected; and (5) how might the Department minimize the burden of this collection on the respondents, including through the use of information technology.

Dated: August 7, 2006.

Leo J. Eiden,

Leader, Information Policy and Standards Team, Regulatory Information Management Services, Office of Management.

Office of Elementary and Secondary Education

Type of Review: Extension.

Title: State Educational Agency Local Educational Agency, and School Data Collection and Reporting under ESEA, Title I, Part A.

Frequency: Annually.

Affected Public: State, Local, or Tribal Gov't, SEAs or LEAs.

Reporting and Recordkeeping Hour Burden:

Responses: 43,285.

Burden Hours: 6,457,586.

Abstract: Title I, Part A of the Elementary and Secondary Education Act, as amended by the No Child Left Behind Act, requires State educational agencies, local educational agencies, and schools to collect and disseminate information to document progress, inform parents and the public about school, district, and state educational performance, and provide services to students and teachers to help at-risk students meet challenging State achievement standards. The change in burden hours is primarily due to updated estimates of the time needed for State educational agency, local educational agency, and school implementation of statutory district and school improvement planning requirements and the statutory requirement that local educational agencies notify parents of eligible students in schools in improvement of their public school choice and supplemental educational services option.

Requests for copies of the proposed information collection request may be accessed from *http://edicsweb.ed.gov,* by selecting the ''Browse Pending Collections'' link and by clicking on link number 3147. When you access the information collection, click on ''Download Attachments'' to view. Written requests for information should be addressed to U.S. Department of Education, 400 Maryland Avenue, SW., Potomac Center, 9th Floor, Washington, DC 20202–4700. Requests may also be electronically mailed to *ICDocketMgr@ed.gov* or faxed to 202–245–6623. Please specify the complete title of the information collection when making your request.

Comments regarding burden and/or the collection activity requirements should be electronically mailed to *ICDocketMgr@ed.gov.* Individuals who use a telecommunications device for the deaf (TDD) may call the Federal Information Relay Service (FIRS) at 1–800–877–8339.

[FR Doc. E6–13105 Filed 8–9–06; 8:45 am]

BILLING CODE 4000–01–P

DEPARTMENT OF EDUCATION

Notice of Proposed Information Collection Requests

AGENCY: Department of Education.

SUMMARY: The Leader, Information Policy and Standards Team, Regulatory Information Management Services, Office of Management, invites comments on the proposed information collection requests as required by the Paperwork Reduction Act of 1995.

DATES: Interested persons are invited to submit comments on or before October 10, 2006.

SUPPLEMENTARY INFORMATION: Section 3506 of the Paperwork Reduction Act of

1995 (44 U.S.C. Chapter 35) requires that the Office of Management and Budget (OMB) provide interested Federal agencies and the public an early opportunity to comment on information collection requests. OMB may amend or waive the requirement for public consultation to the extent that public participation in the approval process would defeat the purpose of the information collection, violate State or Federal law, or substantially interfere with any agency's ability to perform its statutory obligations. The Leader, Information Policy and Standards Team, Regulatory Information Management Services, Office of Management, publishes that notice containing proposed information collection requests prior to submission of these requests to OMB. Each proposed information collection, grouped by office, contains the following: (1) Type of review requested, e.g. new, revision, extension, existing or reinstatement; (2) Title; (3) Summary of the collection; (4) Description of the need for, and proposed use of, the information; (5) Respondents and frequency of collection; and (6) Reporting and/or Recordkeeping burden. OMB invites public comment. The Department of Education is especially interested in public comment addressing the following issues: (1) Is this collection necessary to the proper functions of the Department; (2) will this information be processed and used in a timely manner; (3) is the estimate of burden accurate; (4) how might the Department enhance the quality, utility, and clarity of the information to be collected; and (5) how might the Department minimize the burden of this collection on the respondents, including through the use of information technology.

Dated: August 4, 2006.

Leo J. Eiden,

Leader, Information Policy and Standards Team, Regulatory Information Management Services, Office of Management.

Office of Special Education and Rehabilitative Services

Type of Review: Revision.

Title: IDEA Part C State Performance Plan (SPP) and Annual Performance Report (APR).

Frequency: Annually.

Affected Public: State, Local, or Tribal Gov't, SEAs or LEAs; Not-for-profit institutions; Federal Government.

Reporting and Recordkeeping Hour Burden:

Responses: 56.

Burden Hours: 14,000.

Abstract: The Individuals with Disabilities Education Improvement Act of 2004, signed on December 3, 2004, became PL 108–446. In accordance with 20 U.S.C. 1416(b)(1) and 20 U.S.C. 1442, not later than 1 year after the date of enactment of the Individuals with Disabilities Education Improvement Act of 2004, each Lead Agency must have in place a performance plan that evaluates the Lead Agency's efforts to implement the requirements and purposes of Part C and describe how the Lead Agency will improve such implementation. This plan is called the Part C State Performance Plan (Part C—SPP). In accordance with 20 U.S.C. 1416(b)(2)(C)(ii) and 20 U.S.C. 1442 the Lead Agency shall report annually to the public on the performance of each Part C program located in the State on the targets in the Lead Agency's performance plan. The Lead Agency shall report annually to the Secretary on the performance of the State under the Lead Agency's performance plan. This report is called the Part C Annual Performance Report (Part C—APR.)

Requests for copies of the proposed information collection request may be accessed from *http://edicsweb.ed.gov,* by selecting the ''Browse Pending Collections'' link and by clicking on link number 3167. When you access the information collection, click on ''Download Attachments'' to view. Written requests for information should be addressed to U.S. Department of Education, 400 Maryland Avenue, SW., Potomac Center, 9th Floor, Washington, DC 20202–4700. Requests may also be electronically mailed to *ICDocketMgr@ed.gov* or faxed to 202–245–6623. Please specify the complete title of the information collection when making your request.

Comments regarding burden and/or the collection activity requirements should be electronically mailed to *ICDocketMgr@ed.gov.* Individuals who use a telecommunications device for the deaf (TDD) may call the Federal Information Relay Service (FIRS) at 1–800–877–8339.

[FR Doc. E6–13107 Filed 8–9–06; 8:45 am]

BILLING CODE 4000–01–P

DEPARTMENT OF ENERGY

Bonneville Power Administration

Opportunity for Public Comment; Bonneville Power Administration Long-Term Regional Dialogue Policy Proposal

AGENCY: Bonneville Power Administration (BPA), Department of Energy.

ACTION: Notice of Regional Dialogue policy proposal and opportunity for public comment.

SUMMARY: BPA is publishing a policy proposal regarding the agency's future power supply role in the Pacific Northwest after 2011. This proposal addresses how the agency proposes to market power and distribute the costs and benefits of the Federal Columbia River Power System, which will create valuable certainty for customers over their BPA power supply. Current contracts expire in 2011, and once BPA makes basic policy decisions, it will still take at least another 16 months to negotiate new contracts and put a long-term tiered rate methodology in place. This will leave little more than three years for the region's utilities to make and implement their plans for developing any necessary power supply. It is in the region's best interest to proceed with implementation of this policy and to execute new contracts soon to accommodate such planning and development. A final record of decision on BPA's policy will be issued in early 2007 after all public comments have been reviewed.

DATES: Public comments will be accepted through September 29, 2006. Public meeting dates are included in the **SUPPLEMENTARY INFORMATION** section below.

ADDRESSES: The comment period is open through September 29, 2006. Comments can be submitted on-line at: *http://www.bpa.gov/comment* via e-mail to *comment@bpa.gov*, via mail to: Bonneville Power Administration, Public Affairs Office—DKC–7, P.O. Box 14428, Portland, Oregon, 97293–4428, or faxed to (503) 230–3285. You can also call us with your comment; toll free at (800) 622–4519. Please reference the Regional Dialogue with your comments.

FOR FURTHER INFORMATION CONTACT: Helen Goodwin, Regional Dialogue project manager, at (503) 230–3129. Copies of the policy proposal are available online at *http://www.bpa.gov/power/pl/regionaldialogue/announcements.shtml* or by calling the BPA Public Information Center at (800) 622–4520.

SUPPLEMENTARY INFORMATION:

Schedule of public meetings:

1. August 1, 2006, 3 p.m. to 7 p.m., Seattle, Washington—Mountaineers Building, 300 3rd Avenue West.
2. August 7, 2006, 1 p.m. to 5 p.m., Pasco, Washington—Franklin PUD Auditorium, 1411 West Clark Street.
3. August 9, 2006, 3 p.m. to 7 p.m., Portland, Oregon—BPA Rates Hearing, Room 223, 911 NE. 11th Avenue.

4. August 21, 2006, 1 p.m. to 5 p.m., Missoula, Montana—Wingate Inn, 5252 Airway Boulevard.
5. August 23, 2006, 3 p.m. to 7 p.m., Idaho Falls, Idaho—Shilo Inns Suites Hotel, 780 Lindsay Boulevard.
6. August 29, 2006, 10 a.m. to 3 p.m., Portland, Oregon—BPA Rates Hearing, Room 223, 911 NE. 11th Avenue—Direct Service Industry public meeting.

Any changes or additions to this meeting schedule will be posted on BPA's Regional Dialogue Web site at *www.bpa.gov/power/regionaldialogue.*

Issued in Portland, Oregon on August 1, 2006.

Stephen J. Wright,

Administrator and Chief Executive Officer, Bonneville Power Administration.

[FR Doc. E6–13033 Filed 8–9–06; 8:45 am]

BILLING CODE 6450–01–P

DEPARTMENT OF ENERGY

Energy Information Administration

Agency Information Collection Activities: Proposed Collection; Comment Request

AGENCY: Energy Information Administration (EIA), Department of Energy (DOE).

ACTION: Agency Information Collection Activities: Proposed Collection; Comment Request.

SUMMARY: The EIA is soliciting comments on the proposed three-year extension and revisions to Form FE 746R, ''The Natural Gas Import and Export Authorization Application and Monthly Reports,'' which includes the elimination of the associated quarterly reporting requirement.

DATES: Comments must be filed by October 10, 2006. If you anticipate difficulty in submitting comments within that period, contact the person listed below as soon as possible.

ADDRESSES: Send comments to Yvonne Caudillo. To ensure receipt of the comments by the due date, submission by FAX (202–586–6050) or e-mail (*yvonne.caudillo@hq.doe.gov*) is recommended. The mailing address is The Office of Fossil Energy, Natural Gas Regulatory Activities, FE–34, Forrestal Building, U.S. Department of Energy, Washington, DC 20585. Alternatively, Ms. Caudillo may be contacted by telephone at 202–586–4587.

FOR FURTHER INFORMATION CONTACT: Requests for additional information or copies of any forms and instructions should be directed to Ms. Caudillo at the address listed above.

SUPPLEMENTARY INFORMATION:

I. Background
II. Current Actions
III. Request for Comments

I. Background

The Federal Energy Administration Act of 1974 (Pub. L. No. 93–275, 15 U.S.C. 761 *et seq.*) and the DOE Organization Act (Pub. L. No. 95–91, 42 U.S.C. 7101 *et seq.*) require the EIA to carry out a centralized, comprehensive, and unified energy information program. This program collects, evaluates, assembles, analyzes, and disseminates information on energy resource reserves, production, demand, technology, and related economic and statistical information. This information is used to assess the adequacy of energy resources to meet near and longer term domestic demands.

The EIA, as part of its effort to comply with the Paperwork Reduction Act of 1995 (Pub. L. 104–13, 44 U.S.C. Chapter 35), provides the general public and other Federal agencies with opportunities to comment on collections of energy information conducted by or in conjunction with the EIA. Any comments received help the EIA to prepare data requests that maximize the utility of the information collected, and to assess the impact of collection requirements on the public. Also, the EIA will later seek approval by the Office of Management and Budget (OMB) under Section 3507(a) of the Paperwork Reduction Act of 1995.

DOE's Office of Fossil Energy (FE) is delegated the authority to regulate natural gas imports and exports under section 3 of the Natural Gas Act of 1938, 15 U.S.C. 717b. In order to carry out its delegated responsibility, FE requires those persons seeking to import or export natural gas to file an application containing the basic information about the scope and nature of the proposed import/export activity. Historically, FE has collected information on a quarterly and monthly basis regarding import and export transactions. That information has been used to ensure compliance with the terms and conditions of the authorizations. In addition, the data are used to monitor North American gas trade, which, in turn, enables the Federal government to perform market and regulatory analyses; improve the capability of industry and the government to respond to any future energy-related supply problems; and keep the general public informed of international natural gas trade.

II. Current Actions

DOE will be requesting a three-year extension of approval to its natural gas import and export application information collection for both long-term and blanket (short-term) authorizations. In addition, DOE will be requesting a three-year extension and a revision of its existing information reporting requirements for import/export transactions under an approved application by revising the monthly reporting and eliminating the quarterly report.

DOE has undertaken a Natural Gas Data Collection Initiative to improve the way DOE gathers and disseminates information about the use and origin of natural gas supplies in the U.S. More specifically, DOE is continually seeking to improve the timeliness of the published information and to streamline the reporting process for the natural gas import/export authorization holders. Historically, DOE has collected critical natural gas transaction information (*i.e.*, country of origin/destination, international point of entry/exit, and volume imported/exported) on a monthly basis, and has collected more detailed natural gas information (*i.e.*, country of origin/destination, international point of entry/exit; name of supplier; volume; price; transporter; purchaser; geographic market served; and duration of supply contract) on a quarterly basis. Under this Initiative, DOE plans to collect the detailed natural gas transaction information (which is currently collected on a quarterly basis) on a monthly basis. DOE also plans to eliminate the quarterly reporting requirement.

This proposed change in reporting requirements would reduce the burden on the authorization holders by eliminating the requirement of filing two different reports on two different reporting schedules. This proposed change would also streamline the data collection and publication process and make it possible for DOE to provide the government, the industry and the general public with more detailed information on a more timely basis. DOE will establish an Internet-based reporting option for the proposed monthly reporting. DOE will treat the monthly information as public information, which conforms to the historical treatment of all natural gas import and export information filed pursuant to the terms of all natural gas import/export authorizations.

III. Request for Comments

Prospective respondents and other interested parties should comment on the actions discussed in item II. The following guidelines are provided to assist in the preparation of comments.

General Issues

A. Is the proposed collection of information necessary for the proper performance of the functions of the agency and does the information have practical utility? Practical utility is defined as the actual usefulness of information to or for an agency, taking into account its accuracy, adequacy, reliability, timeliness, and the agency's ability to process the information it collects.

B. What enhancements can be made to the quality, utility, and clarity of the information to be collected?

As a Potential Respondent to the Request for Information

A. What actions could be taken to help ensure and maximize the quality, objectivity, utility, and integrity of the information to be collected?

B. Are the instructions and definitions clear and sufficient? If not, which instructions need clarification?

C. Can the information be submitted by the due date?

D. Public reporting burden for authorization applications is estimated to average 6 hours per application. Public reporting burden for the proposed monthly reporting of transaction information on natural gas imports and exports is estimated to average 3 hours per response. In addition, the elimination of the quarterly report requirement is estimated to reduce the public reporting burden by an average of 5 hours per response per quarter. The estimated burden includes the total time necessary to provide the requested information. In your opinion, how accurate is this estimate?

E. The agency estimates that the only cost to a respondent is for the time it will take to complete the collection. Will a respondent incur any start-up costs for reporting, or any recurring annual costs for operation, maintenance, and purchase of services associated with the information collection?

F. What additional actions could be taken to minimize the burden of this collection of information? Such actions may involve the use of automated, electronic, mechanical, or other technological collection techniques or other forms of information technology.

G. Does any other Federal, State, or local agency collect similar information? If so, specify the agency, the data element(s), and the methods of collection.

As a Potential User of the Information To Be Collected

A. What actions could be taken to help ensure and maximize the quality, objectivity, utility, and integrity of the information disseminated?

B. Is the information useful at the levels of detail to be collected?

C. For what purpose(s) would the information be used? Be specific.

D. Are there alternate sources for the information and are they useful? If so, what are their weaknesses and/or strengths?

Comments submitted in response to this notice will be summarized and/or included in the request for OMB approval of the form. They also will become a matter of public record.

Statutory Authority: Section 3507(h)(1) of the Paperwork Reduction Act of 1995 (Pub. L. 104–13, 44 U.S.C. Chapter 35).

Issued in Washington, DC, August 4, 2006.

Jay H. Casselberry,

Agency Clearance Officer, Energy Information Administration.

[FR Doc. E6–13035 Filed 8–9–06; 8:45 am]

BILLING CODE 6450–01–P

DEPARTMENT OF ENERGY

Federal Energy Regulatory Commission

[Docket No. RP00–445–013]

Alliance Pipeline L.P.; Notice of Negotiated Rates

August 3, 2006.

Take notice that on August 1, 2006, Alliance Pipeline L.P. (Alliance) tendered for filing to become part of its FERC Gas Tariff, Original Volume No. 1, Eighth Revised Sheet No. 11, to become effective August 1, 2006.

Alliance states that the filing is being made to reflect the essential terms of a negotiated rate agreement with Powerex Corp. and deleting the terminated negotiated rate contract with Tenaska Marketing Ventures.

Any person desiring to intervene or to protest this filing must file in accordance with Rules 211 and 214 of the Commission's Rules of Practice and Procedure (18 CFR 385.211 and 385.214). Protests will be considered by the Commission in determining the appropriate action to be taken, but will not serve to make protestants parties to the proceeding. Any person wishing to become a party must file a notice of intervention or motion to intervene, as appropriate. Such notices, motions, or protests must be filed in accordance with the provisions of section 154.210 of the Commission's regulations (18 CFR 154.210). Anyone filing an intervention or protest must serve a copy of that document on the Applicant. Anyone filing an intervention or protest on or before the intervention or protest date need not serve motions to intervene or protests on persons other than the Applicant.

The Commission encourages electronic submission of protests and interventions in lieu of paper using the ''eFiling'' link at *http://www.ferc.gov.* Persons unable to file electronically should submit an original and 14 copies of the protest or intervention to the Federal Energy Regulatory Commission, 888 First Street, NE., Washington, DC 20426.

This filing is accessible on-line at *http://www.ferc.gov,* using the ''eLibrary'' link and is available for review in the Commission's Public Reference Room in Washington, DC. There is an ''eSubscription'' link on the Web site that enables subscribers to receive e-mail notification when a document is added to a subscribed docket(s). For assistance with any FERC Online service, please e-mail *FERCOnlineSupport@ferc.gov,* or call (866) 208–3676 (toll free). For TTY, call (202) 502–8659.

Magalie R. Salas,

Secretary.

[FR Doc. E6–13085 Filed 8–9–06; 8:45 am]

BILLING CODE 6717–01–P

DEPARTMENT OF ENERGY

Federal Energy Regulatory Commission

[Docket No. EF06–2011–000]

U.S. Department of Energy, Bonneville Power Administration; Notice of Filing

August 3, 2006.

Take notice on July 28, 2006, Bonneville Power Administration (BPA) tendered for filing proposed rate adjustments for its wholesale power rates pursuant to section 7(a)(2) of the Pacific Northwest Electric Power Planning and Conservation Act, 16 U.S.C. 839e(a)(2). BPA seeks interim approval of its proposed rates effective September 29, 2006, pursuant to Commission regulation 300.20, 18 CFR 300.20. Pursuant to Commission regulation 300.21, 18 CFR 300.21, BPA seeks interim approval and final confirmation of the proposed rates for the periods October 1, 2006, through September 30, 2009, for the following proposed wholesale power rates:

PF–07 Priority Firm Power Rate.
NR–07 New Resource Firm Power Rate.
IP–07 Industrial Firm Power Rate.
FPS–07 Firm Power Products and Services Rate.

GTA General Transfer Agreement Delivery Charge.

BPA also requests approval of the General Rate Schedule Provisions (GRSPs) for the period of October 1, 2006, through September 30, 2009. The GRSPs will apply to the 2006 wholesale power rates which include the General Transfer Agreement Delivery Charge (GTA) which was approved on a final basis, effective October 1, 2005, through September 30, 2007, by the Commission on September 29, 2005.

Any person desiring to intervene or to protest this filing must file in accordance with Rules 211 and 214 of the Commission's Rules of Practice and Procedure (18 CFR 385.211, 385.214). Protests will be considered by the Commission in determining the appropriate action to be taken, but will not serve to make protestants parties to the proceeding. Any person wishing to become a party must file a notice of intervention or motion to intervene, as appropriate. Such notices, motions, or protests must be filed on or before the comment date. On or before the comment date, it is not necessary to serve motions to intervene or protests on persons other than the Applicant.

The Commission encourages electronic submission of protests and interventions in lieu of paper using the ''eFiling'' link at *http://www.ferc.gov*. Persons unable to file electronically should submit an original and 14 copies of the protest or intervention to the Federal Energy Regulatory Commission, 888 First Street, NE., Washington, DC 20426.

This filing is accessible online at *http://www.ferc.gov*, using the ''eLibrary'' link and is available for review in the Commission's Public Reference Room in Washington, DC. There is an ''eSubscription'' link on the Web site that enables subscribers to receive E-mail notification when a document is added to a subscribed docket(s). For assistance with any FERC Online service, please E-mail *FERCOnlineSupport@ferc.gov*, or call (866) 208–3676 (toll free). For TTY, call (202) 502–8659.

Comment Date: 5 p.m. Eastern Time on August 28, 2006.

Magalie R. Salas,

Secretary.

[FR Doc. E6–13063 Filed 8–9–06; 8:45 am]

BILLING CODE 6717–01–P

DEPARTMENT OF ENERGY

Federal Energy Regulatory Commission

[Docket No. RP06–461–000]

Canyon Creek Compression Company; Notice of Proposed Changes in FERC Gas Tariff

August 3, 2006.

Take notice that on August 1, 2006, Canyon Creek Compression Company (Canyon) tendered for filing as part of its FERC Gas Tariff, Third Revised Volume No. 1, Ninth Revised Sheet No. 6A, to become effective October 1, 2006.

Canyon states that copies of the filing are being mailed to its customers and interested state commissions.

Any person desiring to intervene or to protest this filing must file in accordance with Rules 211 and 214 of the Commission's Rules of Practice and Procedure (18 CFR 385.211 and 385.214). Protests will be considered by the Commission in determining the appropriate action to be taken, but will not serve to make protestants parties to the proceeding. Any person wishing to become a party must file a notice of intervention or motion to intervene, as appropriate. Such notices, motions, or protests must be filed in accordance with the provisions of section 154.210 of the Commission's regulations (18 CFR 154.210). Anyone filing an intervention or protest must serve a copy of that document on the Applicant. Anyone filing an intervention or protest on or before the intervention or protest date need not serve motions to intervene or protests on persons other than the Applicant.

The Commission encourages electronic submission of protests and interventions in lieu of paper using the ''eFiling'' link at *http://www.ferc.gov.* Persons unable to file electronically should submit an original and 14 copies of the protest or intervention to the Federal Energy Regulatory Commission, 888 First Street, NE., Washington, DC 20426.

This filing is accessible on-line at *http://www.ferc.gov,* using the ''eLibrary'' link and is available for review in the Commission's Public Reference Room in Washington, DC. There is an ''eSubscription'' link on the Web site that enables subscribers to receive e-mail notification when a document is added to a subscribed docket(s). For assistance with any FERC Online service, please e-mail *FERCOnlineSupport@ferc.gov,* or call (866) 208–3676 (toll free). For TTY, call (202) 502–8659.

Magalie R. Salas,

Secretary.

[FR Doc. E6–13081 Filed 8–9–06; 8:45 am]

BILLING CODE 6717–01–P

DEPARTMENT OF ENERGY

Federal Energy Regulatory Commission

[Docket No. CP05–48–004]

Central Kentucky Transmission Company; Notice of Compliance Filing

August 3, 2006.

Take notice that on July 31, 2006, Central Kentucky Transmission Company (Central Kentucky) tendered a filing to place its FERC Gas Tariff, Original Volume No. 1, the following sheets with a proposed effective date of September 1, 2006

First Revised Original Sheet No. 6.
First Revised Original Sheet No. 249.

Any person desiring to protest this filing must file in accordance with Rule 211 of the Commission's Rules of Practice and Procedure (18 CFR 385.211). Protests to this filing will be considered by the Commission in determining the appropriate action to be taken, but will not serve to make protestants parties to the proceeding. Such protests must be filed on or before the date as indicated below. Anyone filing a protest must serve a copy of that document on all the parties to the proceeding.

The Commission encourages electronic submission of protests in lieu of paper using the ''eFiling'' link at *http://www.ferc.gov.* Persons unable to file electronically should submit an original and 14 copies of the protest to the Federal Energy Regulatory Commission, 888 First Street, NE., Washington, DC 20426.

This filing is accessible on-line at *http://www.ferc.gov*, using the ''eLibrary'' link and is available for review in the Commission's Public Reference Room in Washington, D.C. There is an ''eSubscription'' link on the Web site that enables subscribers to receive e-mail notification when a document is added to a subscribed docket(s). For assistance with any FERC Online service, please e-mail *FERCOnlineSupport@ferc.gov*, or call (866) 208–3676 (toll free). For TTY, call (202) 502–8659.

Comment Date: 5 p.m. Eastern Time on August 14, 2006.

Magalie R. Salas,

Secretary.

[FR Doc. E6–13061 Filed 8–9–06; 8:45 am]

BILLING CODE 6717–01–P

DEPARTMENT OF ENERGY

Federal Energy Regulatory Commission

Notice of Effectiveness of Exempt Wholesale Generator or Foreign Utility Company Status

August 3, 2006.

Dominion Energy Kewaunee, Inc. (Docket No. EG06–50–000); James A. Goodman, as Receiver for PMCC Calpine New England Investment LLC (Docket No. EG06–52–000); Signal Hill Wichita Falls Power, L.P. (Docket No. EG06–53–000); Empresa Eléctrica de Talca S.A. (Docket No. FC06–4–000); Empresa de Transmisión Electrica Transemel S.A. (Docket No. FC06–5–000); Alcoa Inc. Manicouagan Power Company Alcoa of Australia Limited Alcoa Alumínio S.A. Suriname Aluminum Company L.L.C. (Docket No. FC06–6–000).

Take notice that during the month of July 2006, the status of the above-captioned entities as Exempt Wholesale Generators or Foreign Utility Companies became effective by operation of the Commission's regulations. 18 CFR 366.7(a).

Magalie R. Salas,

Secretary.

[FR Doc. E6–13065 Filed 8–9–06; 8:45 am]

BILLING CODE 6717–01–P

FEDERAL ENERGY REGULATORY COMMISSION

[Docket Nos. RP03–623–005, RP04–618–001, and RP05–685–001 (not consolidated)]

Dominion Transmission, Inc.; Notice of Compliance Filing

August 2, 2006.

Take notice that, on July 28, 2006, Dominion Transmission, Inc. (DTI) tendered for filing a compliance filing pursuant to the Commission's Order on Compliance Filing and Rehearing issued July 7, 2006 in Docket Nos. RP03–623–003 and RP03–623–004.

DTI states that copies of the filing were served on parties on the official service list in the above captioned proceeding.

Any person desiring to protest this filing must file in accordance with Rule 211 of the Commission's Rules of Practice and Procedure (18 CFR 385.211). Protests to this filing will be considered by the Commission in determining the appropriate action to be taken, but will not serve to make protestants parties to the proceeding. Such protests must be filed in accordance with the provisions of Section 154.210 of the Commission's regulations (18 CFR 154.210). Anyone filing a protest must serve a copy of that document on all the parties to the proceeding.

The Commission encourages electronic submission of protests in lieu of paper using the ''eFiling'' link at *http://www.ferc.gov*. Persons unable to file electronically should submit an original and 14 copies of the protest to the Federal Energy Regulatory Commission, 888 First Street, NE., Washington, DC 20426.

This filing is accessible online at *http://www.ferc.gov*, using the ''eLibrary'' link and is available for review in the Commission's Public Reference Room in Washington, DC. There is an ''eSubscription'' link on the Web site that enables subscribers to receive E-mail notification when a document is added to a subscribed docket(s). For assistance with any FERC Online service, please E-mail *FERCOnlineSupport@ferc.gov*, or call (866) 208–3676 (toll free). For TTY, call (202) 502–8659.

Magalie R. Salas,

Secretary.

[FR Doc. E6–13050 Filed 8–9–06; 8:45 am]

BILLING CODE 6717–01–P

DEPARTMENT OF ENERGY

Federal Energy Regulatory Commission

[Docket No. RP06–453–000]

Enbridge Offshore Pipelines (UTOS) LLC; Notice of Proposed Changes in FERC Gas Tariff

August 3, 2006.

Take notice that on July 31, 2006, Enbridge Offshore Pipelines (UTOS) LLC (UTOS) tendered for filing as part of its FERC Gas Tariff, First Revised Volume No. 1, the following tariff sheets, to become effective August 31, 2006:

Second Revised Sheet No. 162.
First Revised Sheet No. 326.
First Revised Sheet No. 327.
First Revised Sheet No. 328.
First Revised Sheet No. 329.
First Revised Sheet No. 330.
First Revised Sheet No. 331.
Original Sheet No. 332.
Original Sheet No. 333.
Original Sheet No. 334.
Original Sheet No. 335.

Any person desiring to intervene or to protest this filing must file in accordance with Rules 211 and 214 of the Commission's Rules of Practice and Procedure (18 CFR 385.211 and 385.214). Protests will be considered by the Commission in determining the appropriate action to be taken, but will not serve to make protestants parties to the proceeding. Any person wishing to become a party must file a notice of intervention or motion to intervene, as appropriate. Such notices, motions, or protests must be filed in accordance with the provisions of section 154.210 of the Commission's regulations (18 CFR 154.210). Anyone filing an intervention or protest must serve a copy of that document on the Applicant. Anyone filing an intervention or protest on or before the intervention or protest date need not serve motions to intervene or protests on persons other than the Applicant.

The Commission encourages electronic submission of protests and interventions in lieu of paper using the ''eFiling'' link at *http://www.ferc.gov.* Persons unable to file electronically should submit an original and 14 copies of the protest or intervention to the Federal Energy Regulatory Commission, 888 First Street, NE., Washington, DC 20426.

This filing is accessible online at *http://www.ferc.gov,* using the ''eLibrary'' link and is available for review in the Commission's Public Reference Room in Washington, DC. There is an ''eSubscription'' link on the Web site that enables subscribers to receive e-mail notification when a document is added to a subscribed docket(s). For assistance with any FERC Online service, please e-mail *FERCOnlineSupport@ferc.gov,* or call (866) 208–3676 (toll free). For TTY, call (202) 502–8659.

Magalie R. Salas,

Secretary.

[FR Doc. E6–13073 Filed 8–9–06; 8:45 am]

BILLING CODE 6717–01–P

DEPARTMENT OF ENERGY

Federal Energy Regulatory Commission

[Docket No. RP06–454–000]

Enbridge Offshore Pipelines (UTOS) LLC; Notice of Tariff Filing

August 3, 2006.

Take notice that on August 1, 2006, Enbridge Offshore Pipelines (UTOS)

LLC (UTOS) tendered for filing as part of its FERC Gas Tariff, First Revised Volume No. 1, Fourth Revised Sheet No. 100, and Original Sheet No. 165, to become effective September 1, 2006.

UTOS states that it is filing these tariff sheets to reflect a Rate Schedule IT Transportation Agreement which does not conform with its form of service agreement.

Any person desiring to intervene or to protest this filing must file in accordance with Rules 211 and 214 of the Commission's Rules of Practice and Procedure (18 CFR 385.211 and 385.214). Protests will be considered by the Commission in determining the appropriate action to be taken, but will not serve to make protestants parties to the proceeding. Any person wishing to become a party must file a notice of intervention or motion to intervene, as appropriate. Such notices, motions, or protests must be filed in accordance with the provisions of Section 154.210 of the Commission's regulations (18 CFR 154.210). Anyone filing an intervention or protest must serve a copy of that document on the Applicant. Anyone filing an intervention or protest on or before the intervention or protest date need not serve motions to intervene or protests on persons other than the Applicant.

The Commission encourages electronic submission of protests and interventions in lieu of paper using the ''eFiling'' link at *http://www.ferc.gov.* Persons unable to file electronically should submit an original and 14 copies of the protest or intervention to the Federal Energy Regulatory Commission, 888 First Street, NE., Washington, D.C. 20426.

This filing is accessible on-line at *http://www.ferc.gov*, using the ''eLibrary'' link and is available for review in the Commission's Public Reference Room in Washington, DC. There is an ''eSubscription'' link on the Web site that enables subscribers to receive e-mail notification when a document is added to a subscribed docket(s). For assistance with any FERC Online service, please e-mail *FERCOnlineSupport@ferc.gov*, or call (866) 208–3676 (toll free). For TTY, call (202) 502–8659.

Magalie R. Salas,

Secretary.

[FR Doc. E6–13074 Filed 8–9–06; 8:45 am]

BILLING CODE 6717–01–P

DEPARTMENT OF ENERGY

Federal Energy Regulatory Commission

[Docket No. RP06–463–000]

Florida Gas Transmission Company and Florida Gas Transmission Company, LLC; Notice of Proposed Changes in FERC Gas Tariff

August 3, 2006.

Take notice that on August 1, 2006, Florida Gas Transmission Company (FGT) tendered for filing as part of its FERC Gas Tariff, Fourth Revised Volume No. 1, the tariff sheets listed on Appendix A to the filing, to reflect a change in corporate name and corporate form.

FGT states that the revised tariff sheets reflect a name change that FGT states is planned to occur on September 1, 2006. On that date, FGT plans to convert to a limited liability company and change its corporate name to Florida Gas Transmission Company, LLC.

Any person desiring to intervene or to protest this filing must file in accordance with Rules 211 and 214 of the Commission's Rules of Practice and Procedure (18 CFR 385.211 and 385.214). Protests will be considered by the Commission in determining the appropriate action to be taken, but will not serve to make protestants parties to the proceeding. Any person wishing to become a party must file a notice of intervention or motion to intervene, as appropriate. Such notices, motions, or protests must be filed in accordance with the provisions of section 154.210 of the Commission's regulations (18 CFR 154.210). Anyone filing an intervention or protest must serve a copy of that document on the Applicant. Anyone filing an intervention or protest on or before the intervention or protest date need not serve motions to intervene or protests on persons other than the Applicant.

The Commission encourages electronic submission of protests and interventions in lieu of paper using the ''eFiling'' link at *http://www.ferc.gov.* Persons unable to file electronically should submit an original and 14 copies of the protest or intervention to the Federal Energy Regulatory Commission, 888 First Street, NE., Washington, DC 20426.

This filing is accessible on-line at *http://www.ferc.gov*, using the ''eLibrary'' link and is available for review in the Commission's Public Reference Room in Washington, DC. There is an ''eSubscription'' link on the Web site that enables subscribers to receive e-mail notification when a document is added to a subscribed docket(s). For assistance with any FERC Online service, please e-mail *FERCOnlineSupport@ferc.gov*, or call (866) 208–3676 (toll free). For TTY, call (202) 502–8659.

Magalie R. Salas,

Secretary.

[FR Doc. E6–13069 Filed 8–9–06; 8:45 am]

BILLING CODE 6717–01–P

DEPARTMENT OF ENERGY

Federal Energy Regulatory Commission

[Docket No. RP99–518–093]

Gas Transmission Northwest Corporation; Notice of Negotiated Rates

August 2, 2006.

Take notice that on July 31, 2006, Gas Transmission Northwest Corporation (GTN) tendered for filing as part of its FERC Gas Tariff, Third Revised Volume No. 1–A, Thirty-Sixth Revised Sheet No. 15, to become effective August 1, 2006.

GTN states that this sheet is being filed to update GTN's reporting of negotiated rate transactions that it has entered into.

Any person desiring to intervene or to protest this filing must file in accordance with Rules 211 and 214 of the Commission's Rules of Practice and Procedure (18 CFR 385.211 and 385.214). Protests will be considered by the Commission in determining the appropriate action to be taken, but will not serve to make protestants parties to the proceeding. Any person wishing to become a party must file a notice of intervention or motion to intervene, as appropriate. Such notices, motions, or protests must be filed in accordance with the provisions of Section 154.210 of the Commission's regulations (18 CFR 154.210). Anyone filing an intervention or protest must serve a copy of that document on the Applicant. Anyone filing an intervention or protest on or before the intervention or protest date need not serve motions to intervene or protests on persons other than the Applicant.

The Commission encourages electronic submission of protests and interventions in lieu of paper using the ''eFiling'' link at *http://www.ferc.gov*. Persons unable to file electronically should submit an original and 14 copies of the protest or intervention to the Federal Energy Regulatory Commission, 888 First Street, NE., Washington, DC 20426.

This filing is accessible online at *http://www.ferc.gov*, using the ''eLibrary'' link and is available for review in the Commission's Public Reference Room in Washington, DC. There is an ''eSubscription'' link on the Web site that enables subscribers to receive E-mail notification when a document is added to a subscribed docket(s). For assistance with any FERC Online service, please E-mail *FERCOnlineSupport@ferc.gov,* or call (866) 208–3676 (toll free). For TTY, call (202) 502–8659.

Magalie R. Salas,

Secretary.

[FR Doc. E6–13044 Filed 8–9–06; 8:45 am]

BILLING CODE 6717–01–P

DEPARTMENT OF ENERGY

Federal Energy Regulatory Commission

[Docket No. RP06–458–000]

Horizon Pipeline Company, L.L.C.; Notice of Proposed Changes in FERC Gas Tariff

August 3, 2006.

Take notice that on August 1, 2006, Horizon Pipeline Company, L.L.C. (Horizon) tendered for filing as part of its FERC Gas Tariff, Original Volume No. 1, Third Revised Sheet No. 5, to become effective October 1, 2006.

Horizon states that copies of the filing are being mailed to its customers and interested state commissions.

Any person desiring to intervene or to protest this filing must file in accordance with Rules 211 and 214 of the Commission's Rules of Practice and Procedure (18 CFR 385.211 and 385.214). Protests will be considered by the Commission in determining the appropriate action to be taken, but will not serve to make protestants parties to the proceeding. Any person wishing to become a party must file a notice of intervention or motion to intervene, as appropriate. Such notices, motions, or protests must be filed in accordance with the provisions of Section 154.210 of the Commission's regulations (18 CFR 154.210). Anyone filing an intervention or protest must serve a copy of that document on the Applicant. Anyone filing an intervention or protest on or before the intervention or protest date need not serve motions to intervene or protests on persons other than the Applicant.

The Commission encourages electronic submission of protests and interventions in lieu of paper using the ''eFiling'' link at *http://www.ferc.gov*. Persons unable to file electronically should submit an original and 14 copies of the protest or intervention to the Federal Energy Regulatory Commission, 888 First Street, NE., Washington, DC 20426.

This filing is accessible on-line at *http://www.ferc.gov*, using the ''eLibrary'' link and is available for review in the Commission's Public Reference Room in Washington, DC. There is an ''eSubscription'' link on the Web site that enables subscribers to receive e-mail notification when a document is added to a subscribed docket(s). For assistance with any FERC Online service, please e-mail *FERCOnlineSupport@ferc.gov*, or call (866) 208–3676 (toll free). For TTY, call (202) 502–8659.

Magalie R. Salas,

Secretary.

[FR Doc. E6–13078 Filed 8–9–06; 8:45 am]

BILLING CODE 6717–01–P

DEPARTMENT OF ENERGY

Federal Energy Regulatory Commission

[Docket No. CP05–94–001]

Liberty Gas Storage, LLC; Notice of Compliance Filing

August 3, 2006.

Take notice that on July 31, 2006, Liberty Gas Storage, LLC (Liberty) tendered for filing as part of its pro forma FERC Gas Tariff, First Revised Volume No. 1, the following revised pro forma tariff sheets:

Pro Forma Sheet No. 135.
Pro Forma Sheet No. 201.

Any person desiring to protest this filing must file in accordance with Rule 211 of the Commission's Rules of Practice and Procedure (18 CFR 385.211). Protests to this filing will be considered by the Commission in determining the appropriate action to be taken, but will not serve to make protestants parties to the proceeding. Such protests must be filed on or before the date as indicated below. Anyone filing a protest must serve a copy of that document on all the parties to the proceeding.

The Commission encourages electronic submission of protests in lieu of paper using the ''eFiling'' link at *http://www.ferc.gov.* Persons unable to file electronically should submit an original and 14 copies of the protest to the Federal Energy Regulatory Commission, 888 First Street, NE., Washington, DC 20426.

This filing is accessible on-line at *http://www.ferc.gov*, using the ''eLibrary'' link and is available for review in the Commission's Public Reference Room in Washington, DC. There is an ''eSubscription'' link on the Web site that enables subscribers to receive e-mail notification when a document is added to a subscribed docket(s). For assistance with any FERC Online service, please e-mail *FERCOnlineSupport@ferc.gov*, or call (866) 208–3676 (toll free). For TTY, call (202) 502–8659.

Comment Date: 5 p.m. Eastern Time on August 14, 2006.

Magalie R. Salas,

Secretary.

[FR Doc. E6–13062 Filed 8–9–06; 8:45 am]

BILLING CODE 6717–01–P

DEPARTMENT OF ENERGY

Federal Energy Regulatory Commission

[Docket No. RP06–451–000]

National Fuel Gas Supply Corporation; Notice of Tariff Filing

August 2, 2006.

Take notice that on July 31, 2006, National Fuel Gas Supply Corporation (National) tendered for filing as part of its FERC Gas Tariff, Fourth Revised Volume No. 1, Ninety Second Revised Sheet No. 9, to become effective August 1, 2006.

Any person desiring to intervene or to protest this filing must file in accordance with Rules 211 and 214 of the Commission's Rules of Practice and Procedure (18 CFR 385.211 and 385.214). Protests will be considered by the Commission in determining the appropriate action to be taken, but will not serve to make protestants parties to the proceeding. Any person wishing to become a party must file a notice of intervention or motion to intervene, as appropriate. Such notices, motions, or protests must be filed in accordance with the provisions of Section 154.210 of the Commission's regulations (18 CFR 154.210). Anyone filing an intervention or protest must serve a copy of that document on the Applicant. Anyone filing an intervention or protest on or before the intervention or protest date need not serve motions to intervene or protests on persons other than the Applicant.

The Commission encourages electronic submission of protests and interventions in lieu of paper using the ''eFiling'' link at *http://www.ferc.gov.* Persons unable to file electronically

should submit an original and 14 copies of the protest or intervention to the Federal Energy Regulatory Commission, 888 First Street, NE., Washington, DC 20426.

This filing is accessible on-line at *http://www.ferc.gov,* using the ''eLibrary'' link and is available for review in the Commission's Public Reference Room in Washington, DC. There is an ''eSubscription'' link on the Web site that enables subscribers to receive e-mail notification when a document is added to a subscribed docket(s). For assistance with any FERC Online service, please e-mail *FERCOnlineSupport@ferc.gov,* or call (866) 208–3676 (toll free). For TTY, call (202) 502–8659.

Magalie R. Salas,

Secretary.

[FR Doc. E6–13053 Filed 8–9–06; 8:45 am]

BILLING CODE 6717–01–P

DEPARTMENT OF ENERGY

Federal Energy Regulatory Commission

[Docket No. CP06–427–000]

Natural Gas Pipeline Company of America; Notice of Request Under Blanket Authorization

August 2, 2006.

Take notice that on July 26, 2006, Natural Gas Pipeline Company of America (Natural), 747 East 22nd Street, Lombard, Illinois 60148, filed in Docket No. CP06–427–000, a request pursuant to sections 157.205 and 157. 208 of the Commission's regulations under the Natural Gas Act and its blanket certificate issued in Docket No CP82–402–000 for authorization to replace approximately 4.34 miles of Natural's 30-inch Louisiana Mainline No. 1 line in Liberty County, Texas with new, heavier walled 30-inch pipeline in an adjacent right-of-way at a cost of approximately $11.9 million. This filing is available for review at the Commission in the Public Reference Room or may be viewed on the Web at *http://www.ferc.gov* using the ''eLibrary'' link. Enter the docket number excluding the last three digits in the docket number field to access the document. For assistance, contact FERC at *FERCOnlineSupport@gerc.gov* or call toll-free, (886) 208–3676 or TYY, (202) 502–8659.

Natural states that in order to continue to operate this segment of its pipeline system at current, required operating pressures, the subject 4.34 mile long segment of pipe must be upgraded to a higher classification of pipe. Due to residential congestion that has built up along natural's Louisiana Mainline No. 1 easement, Natural finds that it will be impossible to replace the pipe along the existing right-of-way easement for the entire 4.34 miles.

Any person or the Commission's Staff may, within 45 days after the issuance of the instant notice by the Commission, file pursuant to Rule 214 of the Commission's Procedural Rules (18 CFR 385.214) a motion to intervene or notice of intervention and, pursuant to Section 157.205 of the Commission's Regulations under the Natural Gas Act (NGA) (18 CFR 157.205) a protest to the request. If no protest is filed within the time allowed therefore, the proposed activity shall be deemed to be authorized effective the day after the time allowed for protest. If a protest is filed and not withdrawn within 30 days after the time allowed for filing a protest, the instant request shall be treated as an application for authorization pursuant to Section 7 of the NGA.

Any questions regarding this application should be directed to Bruce H. Newsome, Vice President, Rates and Certificates, Natural Gas Pipeline Company of America, 747 East 22nd Street, Lombard, Illinois 60148–5072, or call (630) 691–3526 or fax (630) 691–3553.

The Commission strongly encourages electronic filings of comments, protests, and interventions via the internet in lieu of paper. See 18 CFR 385.2001(a) (1) (iii) and the instructions on the Commission's Web site (*http://www.ferc.gov*) under the ''e-Filing'' link.

Magalie R. Salas,

Secretary.

[FR Doc. E6–13045 Filed 8–9–06; 8:45 am]

BILLING CODE 6717–01–P

DEPARTMENT OF ENERGY

Federal Energy Regulatory Commission

[Docket No. RP06–459–000]

Natural Gas Pipeline Company of America; Notice of Proposed Changes in FERC Gas Tariff

August 3, 2006.

Take notice that on August 1, 2006, Natural Gas Pipeline Company of America (Natural) tendered for filing as part of its FERC Gas Tariff, Sixth Revised Volume No. 1, Thirteenth Revised Sheet No. 26, to be effective October 1, 2006.

Natural states that copies of the filing are being mailed to its customers and interested state commissions.

Any person desiring to intervene or to protest this filing must file in accordance with Rules 211 and 214 of the Commission's Rules of Practice and Procedure (18 CFR 385.211 and 385.214). Protests will be considered by the Commission in determining the appropriate action to be taken, but will not serve to make protestants parties to the proceeding. Any person wishing to become a party must file a notice of intervention or motion to intervene, as appropriate. Such notices, motions, or protests must be filed in accordance with the provisions of Section 154.210 of the Commission's regulations (18 CFR 154.210). Anyone filing an intervention or protest must serve a copy of that document on the Applicant. Anyone filing an intervention or protest on or before the intervention or protest date need not serve motions to intervene or protests on persons other than the Applicant.

The Commission encourages electronic submission of protests and interventions in lieu of paper using the ''eFiling'' link at *http://www.ferc.gov.* Persons unable to file electronically should submit an original and 14 copies of the protest or intervention to the Federal Energy Regulatory Commission, 888 First Street, NE., Washington, DC 20426.

This filing is accessible on-line at *http://www.ferc.gov*, using the ''eLibrary'' link and is available for review in the Commission's Public Reference Room in Washington, DC. There is an ''eSubscription'' link on the Web site that enables subscribers to receive e-mail notification when a document is added to a subscribed docket(s). For assistance with any FERC Online service, please e-mail *FERCOnlineSupport@ferc.gov*, or call (866) 208–3676 (toll free). For TTY, call (202) 502–8659.

Magalie R. Salas,

Secretary.

[FR Doc. E6–13079 Filed 8–9–06; 8:45 am]

BILLING CODE 6717–01–P

DEPARTMENT OF ENERGY

Federal Energy Regulatory Commission

[Docket No. RP06–456–000]

Northern Natural Gas Company; Notice of Tariff Filing

August 3, 2006.

Take notice that on August 1, 2006, Northern Natural Gas Company (Northern) tendered for filing as part of its FERC Gas Tariff, Fifth Revised Volume No. 1, Seventh Revised Sheet No. 292, to become effective September 1, 2006.

Northern states that it is filing the above referenced tariff sheet to change the calculation of daily delivery variance charges when Northern has called a system overrun limitation or a Critical Day for a branchline.

Any person desiring to intervene or to protest this filing must file in accordance with Rules 211 and 214 of the Commission's Rules of Practice and Procedure (18 CFR 385.211 and 385.214). Protests will be considered by the Commission in determining the appropriate action to be taken, but will not serve to make protestants parties to the proceeding. Any person wishing to become a party must file a notice of intervention or motion to intervene, as appropriate. Such notices, motions, or protests must be filed in accordance with the provisions of Section 154.210 of the Commission's regulations (18 CFR 154.210). Anyone filing an intervention or protest must serve a copy of that document on the Applicant. Anyone filing an intervention or protest on or before the intervention or protest date need not serve motions to intervene or protests on persons other than the Applicant.

The Commission encourages electronic submission of protests and interventions in lieu of paper using the ''eFiling'' link at *http://www.ferc.gov.* Persons unable to file electronically should submit an original and 14 copies of the protest or intervention to the Federal Energy Regulatory Commission, 888 First Street, NE., Washington, DC 20426.

This filing is accessible on-line at *http://www.ferc.gov,* using the ''eLibrary'' link and is available for review in the Commission's Public Reference Room in Washington, DC. There is an ''eSubscription'' link on the Web site that enables subscribers to receive e-mail notification when a document is added to a subscribed docket(s). For assistance with any FERC Online service, please e-mail *FERCOnlineSupport@ferc.gov,* or call (866) 208–3676 (toll free). For TTY, call (202) 502–8659.

Magalie R. Salas,

Secretary.

[FR Doc. E6–13076 Filed 8–9–06; 8:45 am]

BILLING CODE 6717–01–P

DEPARTMENT OF ENERGY

Federal Energy Regulatory Commission

[Docket No. RP06–200–008]

Rockies Express Pipeline LLC; Notice of Compliance Filing

August 2, 2006.

Take notice that on July 28, 2006, Rockies Express Pipeline LLC (REX) tendered for filing of its FERC Gas Tariff, First Revised Volume No. 1, Fourth Revised Sheet No. 22, with an effective date of August 1, 2006.

REX stated that a copy of this filing has been served upon all parties to this proceeding, REX's customers, the Colorado Public Utilities Commission and the Wyoming Public Service Commission.

Any person desiring to protest this filing must file in accordance with Rule 211 of the Commission's Rules of Practice and Procedure (18 CFR 385.211). Protests to this filing will be considered by the Commission in determining the appropriate action to be taken, but will not serve to make protestants parties to the proceeding. Such protests must be filed in accordance with the provisions of Section 154.210 of the Commission's regulations (18 CFR 154.210). Anyone filing a protest must serve a copy of that document on all the parties to the proceeding.

The Commission encourages electronic submission of protests in lieu of paper using the ''eFiling'' link at *http://www.ferc.gov.* Persons unable to file electronically should submit an original and 14 copies of the protest to the Federal Energy Regulatory Commission, 888 First Street, NE., Washington, DC 20426.

This filing is accessible online at *http://www.ferc.gov,* using the ''eLibrary'' link and is available for review in the Commission's Public Reference Room in Washington, DC. There is an ''eSubscription'' link on the Web site that enables subscribers to receive e-mail notification when a document is added to a subscribed docket(s). For assistance with any FERC Online service, please e-mail *FERCOnlineSupport@ferc.gov,* or call (866) 208–3676 (toll free). For TTY, call (202) 502–8659.

Magalie R. Salas,

Secretary.

[FR Doc. E6–13051 Filed 8–9–06; 8:45 am]

BILLING CODE 6717–01–P

DEPARTMENT OF ENERGY

Federal Energy Regulatory Commission

[Docket No. RP06–200–008]

Rockies Express Pipeline LLC; Notice of Compliance Filing

August 2, 2006.

Take notice that on July 28, 2006, Rockies Express Pipeline LLC (REX) tendered for filing of its FERC Gas Tariff, First Revised Volume No. 1, Fourth Revised Sheet No. 22, with an effective date of August 1, 2006.

REX states that the filing is being made in compliance with the Commission's letter order issued March 20, 1997, in Docket No. CP04–413–000.

REX stated that a copy of this filing has been served upon all parties to this proceeding, REX's customers, the Colorado Public Utilities Commission and the Wyoming Public Service Commission.

Any person desiring to protest this filing must file in accordance with Rule 211 of the Commission's Rules of Practice and Procedure (18 CFR 385.211). Protests to this filing will be considered by the Commission in determining the appropriate action to be taken, but will not serve to make protestants parties to the proceeding. Such protests must be filed in accordance with the provisions of Section 154.210 of the Commission's regulations (18 CFR 154.210). Anyone filing a protest must serve a copy of that document on all the parties to the proceeding.

The Commission encourages electronic submission of protests in lieu of paper using the ''eFiling'' link at *http://www.ferc.gov.* Persons unable to file electronically should submit an original and 14 copies of the protest to the Federal Energy Regulatory Commission, 888 First Street, NE., Washington, DC 20426.

This filing is accessible on-line at *http://www.ferc.gov,* using the ''eLibrary'' link and is available for review in the Commission's Public Reference Room in Washington, DC. There is an ''eSubscription'' link on the Web site that enables subscribers to receive e-mail notification when a document is added to a subscribed

docket(s). For assistance with any FERC Online service, please e-mail *FERCOnlineSupport@ferc.gov*, or call (866) 208–3676 (toll free). For TTY, call (202) 502–8659.

Magalie R. Salas,

Secretary.

[FR Doc. E6–13071 Filed 8–9–06; 8:45 am]

BILLING CODE 6717–01–P

DEPARTMENT OF ENERGY

Federal Energy Regulatory Commission

[Docket No. CP04–14–007]

Saltville Gas Storage Company L.L.C.; Notice of Compliance Filing

August 2, 2006.

Take notice that on July 28, 2006, Saltville Gas Storage Company L.L.C. (Saltville) tendered for filing as part of its FERC Gas Tariff, Volume No. 1, the tariff sheets in Appendix A to the filing, to become effective September 1, 2006.

Saltville states that copies of its filing have been served on all affected customers and interested state commissions.

Any person desiring to protest this filing must file in accordance with Rule 211 of the Commission's Rules of Practice and Procedure (18 CFR 385.211). Protests to this filing will be considered by the Commission in determining the appropriate action to be taken, but will not serve to make protestants parties to the proceeding. Such protests must be filed on or before the date as indicated below. Anyone filing a protest must serve a copy of that document on all the parties to the proceeding.

The Commission encourages electronic submission of protests in lieu of paper using the ''eFiling'' link at *http://www.ferc.gov.* Persons unable to file electronically should submit an original and 14 copies of the protest to the Federal Energy Regulatory Commission, 888 First Street, NE., Washington, DC 20426.

This filing is accessible online at *http://www.ferc.gov,* using the ''eLibrary'' link and is available for review in the Commission's Public Reference Room in Washington, DC. There is an ''eSubscription'' link on the Web site that enables subscribers to receive e-mail notification when a document is added to a subscribed docket(s). For assistance with any FERC Online service, please e-mail *FERCOnlineSupport@ferc.gov,* or call (866) 208–3676 (toll free). For TTY, call (202) 502–8659.

Comment Date: 5 p.m. Eastern Time on August 18, 2006.

Magalie R. Salas,

Secretary.

[FR Doc. E6–13055 Filed 8–9–06; 8:45 am]

BILLING CODE 6717–01–P

DEPARTMENT OF ENERGY

Federal Energy Regulatory Commission

[Docket No. CP02–229–002]

SG Resources Mississippi, L.L.C.; Notice of Application for Amendments and Request for Reaffirmation of Market Based Rate Authorization

August 3, 2006.

Take notice that on July 21, 2006, SG Resources Mississippi, L.L.C. (SGR), 7500 San Felipe, Suite 600, Houston, Texas 77063, filed with the Federal Energy Regulatory Commission an abbreviated application under section 7 of the Natural Gas Act (NGA) for an order amending the certificate of public convenience and necessity issued in Docket No. CP02–229–000.

SGR seeks authorization to: (1) Increase the working gas capacity of each of the two natural gas storage caverns previously authorized as part of the Southern Pines Energy Center currently under construction in Greene County, Mississippi from 6 Bcf each to 8 Bcf each; (2) develop a third cavern having working gas capacity of 8 Bcf; (3) construct two additional brine disposal wells; (4) construct, own, operate and maintain approximately 26 miles of dual 24-inch diameter bi-directional natural gas pipelines and associated facilities that will interconnect the Southern Pines Energy Center with the natural gas pipeline facilities of Florida Gas Transmission Company and Transcontinental Gas Pipe Line Corporation (the FGT/Transco Lateral); and (5) eliminate one of the two originally-certificated, 3.13-mile-long, 24-inch diameter pipelines extending from the storage facility to an interconnection with the Destin Pipeline Company, LLC pipeline system. SGR's application also seeks reaffirmation of its previously-granted authorization to charge market-based rates for its storage and hub services.

This application is available for review at the Commission in the Public Reference Room or may be viewed on the Commission's Web site at *http://www.ferc.gov* using the ''eLibrary'' link. Enter the docket number excluding the last three digits in the docket number field to access the document. For assistance, please contact FERC Online Support at *FERCOnlineSupport@ferc.gov* or toll free at (866) 208–3676, or for TTY, contact (202) 502–8659.

Any questions about this application should be directed to James F. Bowe, Jr., Dewey Ballantine LLP, 1775 Pennsylvania Avenue, NW., Washington, DC 20006–4605, 202–429–1444 (phone)/202–429–1579 (fax), *jbowe@deweyballantine.com.*

There are two ways to become involved in the Commission's review of this project. First, any person wishing to obtain legal status by becoming a party to the proceedings for this project should, on or before the comment date listed below, file with the Federal Energy Regulatory Commission, 888 First Street, NE., Washington, DC 20426, a motion to intervene in accordance with the requirements of the Commission's Rules of Practice and Procedure (18 CFR 385.214 or 385.211) and the Regulations under the NGA (18 CFR 157.10). A person obtaining party status will be placed on the service list maintained by the Secretary of the Commission and will receive copies of all documents filed by the applicant and by all other parties. A party must submit 14 copies of this filing and all subsequent filings made with the Commission and must mail a copy of all filing to the applicant and to every other party in the proceeding. Only parties to the proceeding can ask for court review of Commission orders in the proceeding.

However, other persons do not have to intervene in order to have comments considered. The second way to participate is by filing with the Secretary of the Commission, as soon as possible, an original and two copies of comments in support of or in opposition to this project. The Commission will consider these comments in determining the appropriate action to be taken, but the filing of a comment alone will not serve to make the filer a party to the proceeding. The Commission's rules require that persons filing comments in opposition to this project provide copies of their protests only to the party or parties directly involved in the protest.

Persons who wish to comment only on the environmental review of this project, or in support of or in opposition to this project, should submit an original and two copies of their comments to the Secretary of the Commission. Environmental commenters will be placed on the Commission's environmental mailing list, will receive copies of the environmental documents, and will be notified of meetings associated with the

Commission's environmental review process. Environmental commenters will not be required to serve copies of filed documents on all other parties. The Commission's rules require that persons filing comments in opposition to the project provide copies of their protests only to the applicant. However, the non-party commenters will not receive copies of all documents filed by other parties or issued by the Commission (except for the mailing of environmental documents issued by the Commission) and will not have the right to seek court review of the Commission's final order.

The Commission strongly encourages electronic filings of comments, protests, and interventions via the internet in lieu of paper. See 18 CFR 385.2001(a)(1)(iii) and the instructions on the Commission's Web site (*www.ferc.gov*) under the ''e-Filing'' link.

Comment Date: August 24, 2006.

Magalie R. Salas,

Secretary.

[FR Doc. E6–13068 Filed 8–9–06; 8:45 am]

BILLING CODE 6717–01–P

DEPARTMENT OF ENERGY

Federal Energy Regulatory Commission

[Docket No. RP06–452–000]

Stingray Pipeline Company, L.L.C.; Notice of Proposed Changes in FERC Gas Tariff

August 3, 2006

Take notice that on July 31, 2006, Stingray Pipeline Company, L.L.C. (Stingray) tendered for filing as part of its FERC Gas Tariff, Third Revised Volume No. 1, the following tariff sheets, to become effective August 31, 2006:

Tenth Revised Sheet No. 2.
Fifth Revised Sheet No. 143.
Second Revised Sheet No. 306.
First Revised Sheet No. 307.
First Revised Sheet No. 308.
Fourth Revised Sheet No. 309.
First Revised Sheet No. 310.
Second Revised Sheet No. 311.
Second Revised Sheet No. 312.
Original Sheet No. 312A.

Any person desiring to intervene or to protest this filing must file in accordance with Rules 211 and 214 of the Commission's Rules of Practice and Procedure (18 CFR 385.211 and 385.214). Protests will be considered by the Commission in determining the appropriate action to be taken, but will not serve to make protestants parties to the proceeding. Any person wishing to become a party must file a notice of intervention or motion to intervene, as appropriate. Such notices, motions, or protests must be filed in accordance with the provisions of Section 154.210 of the Commission's regulations (18 CFR 154.210). Anyone filing an intervention or protest must serve a copy of that document on the Applicant. Anyone filing an intervention or protest on or before the intervention or protest date need not serve motions to intervene or protests on persons other than the Applicant.

The Commission encourages electronic submission of protests and interventions in lieu of paper using the ''eFiling'' link at *http://www.ferc.gov.* Persons unable to file electronically should submit an original and 14 copies of the protest or intervention to the Federal Energy Regulatory Commission, 888 First Street, NE., Washington, DC 20426.

This filing is accessible on-line at *http://www.ferc.gov,* using the ''eLibrary'' link and is available for review in the Commission's Public Reference Room in Washington, DC. There is an ''eSubscription'' link on the web site that enables subscribers to receive e-mail notification when a document is added to a subscribed docket(s). For assistance with any FERC Online service, please e-mail *FERCOnlineSupport@ferc.gov,* or call (866) 208–3676 (toll free). For TTY, call (202) 502–8659.

Magalie R. Salas,

Secretary.

[FR Doc. E6–13072 Filed 8–9–06; 8:45 am]

BILLING CODE 6717–01–P

DEPARTMENT OF ENERGY

Federal Energy Regulatory Commission

[Texas Gas Transmission, LLC]

Notice of Proposed Changes in FERC Gas Tariff

August 3, 2006.

Take notice that on August 1, 2006, Texas Gas Transmission, LLC (Texas Gas) tendered for filing as part of its FERC Gas Tariff, Second Revised Volume No. 1, Eighth Revised Sheet No. 56, to become effective August 1, 2006.

Any person desiring to intervene or to protest this filing must file in accordance with Rules 211 and 214 of the Commission's Rules of Practice and Procedure (18 CFR 385.211 and 385.214). Protests will be considered by the Commission in determining the appropriate action to be taken, but will not serve to make protestants parties to the proceeding. Any person wishing to become a party must file a notice of intervention or motion to intervene, as appropriate. Such notices, motions, or protests must be filed in accordance with the provisions of section 154.210 of the Commission's regulations (18 CFR 154.210). Anyone filing an intervention or protest must serve a copy of that document on the Applicant. Anyone filing an intervention or protest on or before the intervention or protest date need not serve motions to intervene or protests on persons other than the Applicant.

The Commission encourages electronic submission of protests and interventions in lieu of paper using the ''eFiling'' link at *http://www.ferc.gov*. Persons unable to file electronically should submit an original and 14 copies of the protest or intervention to the Federal Energy Regulatory Commission, 888 First Street, NE., Washington, D.C. 20426.

This filing is accessible on-line at *http://www.ferc.gov*, using the ''eLibrary'' link and is available for review in the Commission's Public Reference Room in Washington, DC There is an ''eSubscription'' link on the Web site that enables subscribers to receive e-mail notification when a document is added to a subscribed docket(s). For assistance with any FERC Online service, please e-mail *FERCOnlineSupport@ferc.gov*, or call (866) 208–3676 (toll free). For TTY, call (202) 502–8659.

Magalie R. Salas,

Secretary.

[FR Doc. E6–13075 Filed 8–9–06; 8:45 am]

BILLING CODE 6717–01–P

DEPARTMENT OF ENERGY

Federal Energy Regulatory Commission

[Docket No. RP06–460–000]

Trailblazer Pipeline Company; Notice of Proposed Changes in FERC Gas Tariff

August 3, 2006.

Take notice that on August 1, 2006, Trailblazer Pipeline Company (Trailblazer) tendered for filing as part of its FERC Gas Tariff, Third Revised Volume No. 1, the following tariff sheets, to become effective October 1, 2006:

Fourteenth Revised Sheet No. 5
Seventh Revised Sheet No. 7

Trailblazer states that copies of the filing are being mailed to its customers and interested state commissions.

Any person desiring to intervene or to protest this filing must file in accordance with Rules 211 and 214 of the Commission's Rules of Practice and Procedure (18 CFR 385.211 and 385.214). Protests will be considered by the Commission in determining the appropriate action to be taken, but will not serve to make protestants parties to the proceeding. Any person wishing to become a party must file a notice of intervention or motion to intervene, as appropriate. Such notices, motions, or protests must be filed in accordance with the provisions of Section 154.210 of the Commission's regulations (18 CFR 154.210). Anyone filing an intervention or protest must serve a copy of that document on the Applicant. Anyone filing an intervention or protest on or before the intervention or protest date need not serve motions to intervene or protests on persons other than the Applicant.

The Commission encourages electronic submission of protests and interventions in lieu of paper using the ''eFiling'' link at *http://www.ferc.gov.* Persons unable to file electronically should submit an original and 14 copies of the protest or intervention to the Federal Energy Regulatory Commission, 888 First Street, NE., Washington, DC 20426.

This filing is accessible on-line at *http://www.ferc.gov*, using the ''eLibrary'' link and is available for review in the Commission's Public Reference Room in Washington, DC. There is an ''eSubscription'' link on the Web site that enables subscribers to receive e-mail notification when a document is added to a subscribed docket(s). For assistance with any FERC Online service, please e-mail *FERCOnlineSupport@ferc.gov*, or call (866) 208–3676 (toll free). For TTY, call (202) 502–8659.

Magalie R. Salas,

Secretary.

[FR Doc. E6–13080 Filed 8–9–06; 8:45 am]

BILLING CODE 6717–01–P

DEPARTMENT OF ENERGY

Federal Energy Regulatory Commission

[Docket No. RP97–255–070]

TransColorado Gas Transmission Company; Notice of Compliance Filing

August 2, 2006.

Take notice that on July 31, 2006, TransColorado Gas Transmission Company (TransColorado) tendered for filing of its FERC Gas Tariff, First Revised Volume No. 1, Eighth Revised Sheet No. 22B, to be effective August 1, 2006.

TransColorado stated that a copy of this filing has been served upon all parties to this proceeding, TransColorado's customers, the Colorado Public Utilities Commission and the New Mexico Public Utilities Commission.

Any person desiring to protest this filing must file in accordance with Rule 211 of the Commission's Rules of Practice and Procedure (18 CFR 385.211). Protests to this filing will be considered by the Commission in determining the appropriate action to be taken, but will not serve to make protestants parties to the proceeding. Such protests must be filed in accordance with the provisions of section 154.210 of the Commission's regulations (18 CFR 154.210). Anyone filing a protest must serve a copy of that document on all the parties to the proceeding.

The Commission encourages electronic submission of protests in lieu of paper using the ''eFiling'' link at *http://www.ferc.gov*. Persons unable to file electronically should submit an original and 14 copies of the protest to the Federal Energy Regulatory Commission, 888 First Street, NE., Washington, DC 20426.

This filing is accessible online at *http://www.ferc.gov*, using the ''eLibrary'' link and is available for review in the Commission's Public Reference Room in Washington, DC. There is an ''eSubscription'' link on the Web site that enables subscribers to receive e-mail notification when a document is added to a subscribed docket(s). For assistance with any FERC Online service, please e-mail *FERCOnlineSupport@ferc.gov*, or call (866) 208–3676 (toll free). For TTY, call (202) 502–8659.

Magalie R. Salas,

Secretary.

[FR Doc. E6–13054 Filed 8–9–06; 8:45 am]

BILLING CODE 6717–01–P

DEPARTMENT OF ENERGY

Federal Energy Regulatory Commission

[Docket No. RP06–450–000]

Transcontinental Gas Pipe Line Corporation; Notice of Proposed Changes in FERC Gas Tariff

August 2, 2006.

Take notice that on July 31, 2006, Transcontinental Gas Pipe Line Corporation (Transco) tendered for filing as part of its FERC Gas Tariff, Third Revised Volume No. 1, Thirty-Fourth Revised Sheet No. 28, to become effective August 1, 2006.

Transco states that copies of the filing are being mailed to affected customers and interested state commissions.

Any person desiring to intervene or to protest this filing must file in accordance with Rules 211 and 214 of the Commission's Rules of Practice and Procedure (18 CFR 385.211 and 385.214). Protests will be considered by the Commission in determining the appropriate action to be taken, but will not serve to make protestants parties to the proceeding. Any person wishing to become a party must file a notice of intervention or motion to intervene, as appropriate. Such notices, motions, or protests must be filed in accordance with the provisions of § 154.210 of the Commission's regulations (18 CFR 154.210). Anyone filing an intervention or protest must serve a copy of that document on the Applicant. Anyone filing an intervention or protest on or before the intervention or protest date need not serve motions to intervene or protests on persons other than the Applicant.

The Commission encourages electronic submission of protests and interventions in lieu of paper using the ''eFiling'' link at *http://www.ferc.gov*. Persons unable to file electronically should submit an original and 14 copies of the protest or intervention to the Federal Energy Regulatory Commission, 888 First Street, NE., Washington, DC 20426.

This filing is accessible online at *http://www.ferc.gov*, using the ''eLibrary'' link and is available for review in the Commission's Public Reference Room in Washington, DC. There is an ''eSubscription'' link on the Web site that enables subscribers to receive E-mail notification when a document is added to a subscribed docket(s). For assistance with any FERC Online service, please e-mail *FERCOnlineSupport@ferc.gov*, or call

(866) 208–3676 (toll free). For TTY, call (202) 502–8659.

Magalie R. Salas,

Secretary.

[FR Doc. E6–13052 Filed 8–9–06; 8:45 am]

BILLING CODE 6717–01–P

DEPARTMENT OF ENERGY

Federal Energy Regulatory Commission

[Docket No. RP06–457–000]

Transcontinental Gas Pipe Line Corporation; Notice of Tariff Filing

August 3, 2006.

Take notice that on August 1, 2006, Transcontinental Gas Pipe Line Corporation (Transco) tendered for filing as part of its FERC Gas Tariff, Third Revised Volume No. 1, the tariff sheets listed on Appendix A to its filing, to become effective July 1, 2006. The revised tariff sheets reflect the cancellation of Rate Schedule FT–NT and make additional conforming changes.

Any person desiring to intervene or to protest this filing must file in accordance with Rules 211 and 214 of the Commission's Rules of Practice and Procedure (18 CFR 385.211 and 385.214). Protests will be considered by the Commission in determining the appropriate action to be taken, but will not serve to make protestants parties to the proceeding. Any person wishing to become a party must file a notice of intervention or motion to intervene, as appropriate. Such notices, motions, or protests must be filed in accordance with the provisions of Section 154.210 of the Commission's regulations (18 CFR 154.210). Anyone filing an intervention or protest must serve a copy of that document on the Applicant. Anyone filing an intervention or protest on or before the intervention or protest date need not serve motions to intervene or protests on persons other than the Applicant.

The Commission encourages electronic submission of protests and interventions in lieu of paper using the ''eFiling'' link at *http://www.ferc.gov.* Persons unable to file electronically should submit an original and 14 copies of the protest or intervention to the Federal Energy Regulatory Commission, 888 First Street, NE., Washington, DC 20426.

This filing is accessible on-line at *http://www.ferc.gov,* using the ''eLibrary'' link and is available for review in the Commission's Public Reference Room in Washington, DC. There is an ''eSubscription'' link on the Web site that enables subscribers to receive e-mail notification when a document is added to a subscribed docket(s). For assistance with any FERC Online service, please e-mail *FERCOnlineSupport@ferc.gov,* or call (866) 208–3676 (toll free). For TTY, call (202) 502–8659.

Magalie R. Salas,

Secretary.

[FR Doc. E6–13077 Filed 8–9–06; 8:45 am]

BILLING CODE 6717–01–P

DEPARTMENT OF ENERGY

Federal Energy Regulatory Commission

[Docket No. RP06–462–000]

Transcontinental Gas Pipe Line Corporation; Notice of Refund Report

August 3, 2006.

Take notice that on July 31, 2006 Transcontinental Gas Pipe Line Corporation (Transco) filed a report reflecting the flow through of refunds received from Dominion Transmission, Inc. (Dominion) in Docket No. RP06–424–000. On July 31, 2006 Transco, in accordance with section 4 of its Rate Schedules LSS and FT–NT and section 3 of its Rate Schedule GSS, flowed through the amount of $27,960.34 refunded by Dominion to its LSS, FT–NT and GSS customers.

Any person desiring to intervene or to protest this filing must file in accordance with Rules 211 and 214 of the Commission's Rules of Practice and Procedure (18 CFR 385.211 and 385.214). Protests will be considered by the Commission in determining the appropriate action to be taken, but will not serve to make protestants parties to the proceeding. Any person wishing to become a party must file a notice of intervention or motion to intervene, as appropriate. Such notices, motions, or protests must be filed in on or before the date as indicated below. Anyone filing an intervention or protest must serve a copy of that document on the Applicant. Anyone filing an intervention or protest on or before the intervention or protest date need not serve motions to intervene or protests on persons other than the Applicant.

The Commission encourages electronic submission of protests and interventions in lieu of paper using the ''eFiling'' link at *http://www.ferc.gov.* Persons unable to file electronically should submit an original and 14 copies of the protest or intervention to the Federal Energy Regulatory Commission, 888 First Street, NE., Washington, DC 20426.

This filing is accessible on-line at *http://www.ferc.gov*, using the ''eLibrary'' link and is available for review in the Commission's Public Reference Room in Washington, DC. There is an ''eSubscription'' link on the Web site that enables subscribers to receive e-mail notification when a document is added to a subscribed docket(s). For assistance with any FERC Online service, please e-mail *FERCOnlineSupport@ferc.gov*, or call (866) 208–3676 (toll free). For TTY, call (202) 502–8659.

Comment Date: 5 pm Eastern Time August 10, 2006.

Magalie R. Salas,

Secretary.

[FR Doc. E6–13084 Filed 8–9–06; 8:45 am]

BILLING CODE 6717–01–P

DEPARTMENT OF ENERGY

Federal Energy Regulatory Commission

[Docket No. EF06–5011–000]

Western Area Power Administration; Notice of Filing

August 3, 2006.

Take notice that on July 28, 2006, the Deputy Secretary, U.S. Department of Energy, pursuant to the authority vested on the Deputy Secretary by Delegation Order No. 00–37.00, effective December 6, 2001, submitted for confirmation and approval on a final basis, the following rate schedules effective September 1, 2006 and ending September 30, 2009: Rate Schedules CV–F12, for base resource and first preference power from the Central Valley Project; CV–T2 for firm and non-firm point-to-point transmission service on the CVP transmission system, CV–NWT4 for network integration transmission service on the CVP transmission system, COTP–T2 for firm and non firm point-to-point transmission service on the California-Oregon Transmission Project, and PACI–T2 for firm and non-firm point-to-point transmission service on the Pacific Alternating Current Intertie.

Any person desiring to intervene or to protest this filing must file in accordance with Rules 211 and 214 of the Commission's Rules of Practice and Procedure (18 CFR 385.211, 385.214). Protests will be considered by the Commission in determining the appropriate action to be taken, but will not serve to make protestants parties to the proceeding. Any person wishing to become a party must file a notice of

intervention or motion to intervene, as appropriate. Such notices, motions, or protests must be filed on or before the comment date. On or before the comment date, it is not necessary to serve motions to intervene or protests on persons other than the Applicant.

The Commission encourages electronic submission of protests and interventions in lieu of paper using the ''eFiling'' link at *http://www.ferc.gov*. Persons unable to file electronically should submit an original and 14 copies of the protest or intervention to the Federal Energy Regulatory Commission, 888 First Street, NE., Washington, DC 20426.

This filing is accessible online at *http://www.ferc.gov*, using the ''eLibrary'' link and is available for review in the Commission's Public Reference Room in Washington, DC. There is an ''eSubscription'' link on the Web site that enables subscribers to receive e-mail notification when a document is added to a subscribed docket(s). For assistance with any FERC Online service, please e-mail *FERCOnlineSupport@ferc.gov*, or call (866) 208–3676 (toll free). For TTY, call (202) 502–8659.

Comment Date: 5 p.m. Eastern Time on August 28, 2006.

Magalie R. Salas,

Secretary.

[FR Doc. E6–13064 Filed 8–9–06; 8:45 am]

BILLING CODE 6717–01–P

DEPARTMENT OF ENERGY

Federal Energy Regulatory Commission

[Docket No. EL06–93–000]

Alabama Municipal Electric Authority, Complainant v. Alabama Power Company and Southern Company Services, Inc., Respondents; Notice of Complaint

August 2, 2006.

Take notice that on August 1, 2006, Alabama Municipal Electric Authority (AMEA) filed a formal complaint against Alabama Power Company and Southern Company Services, Inc., pursuant to sections 206 and 306 of the Federal Power Act, alleging that the rates in Respondent's transmission tariff do not meet the Commission's comparability standard and thus are unjust, unreasonable, and unduly discriminatory.

AMEA certifies that copies of the complaint were served on the contacts for Alabama Power Company and Southern Company Services, Inc., as listed on the Commission's list of Corporate Officials.

Any person desiring to intervene or to protest this filing must file in accordance with Rules 211 and 214 of the Commission's Rules of Practice and Procedure (18 CFR 385.211 and 385.214). Protests will be considered by the Commission in determining the appropriate action to be taken, but will not serve to make protestants parties to the proceeding. Any person wishing to become a party must file a notice of intervention or motion to intervene, as appropriate. The Respondent's answer and all interventions, or protests must be filed on or before the comment date. The Respondent's answer, motions to intervene, and protests must be served on the Complainants.

The Commission encourages electronic submission of protests and interventions in lieu of paper using the ''eFiling'' link at *http://www.ferc.gov*. Persons unable to file electronically should submit an original and 14 copies of the protest or intervention to the Federal Energy Regulatory Commission, 888 First Street, NE., Washington, DC 20426.

This filing is accessible on-line at *http://www.ferc.gov*, using the ''eLibrary'' link and is available for review in the Commission's Public Reference Room in Washington, DC. There is an ''eSubscription'' link on the Web site that enables subscribers to receive E-mail notification when a document is added to a subscribed docket(s). For assistance with any FERC Online service, please e-mail *FERCOnlineSupport@ferc.gov*, or call (866) 208–3676 (toll free). For TTY, call (202) 502–8659.

Comment Date: 5 p.m. Eastern Time on August 21, 2006.

Magalie R. Salas,

Secretary.

[FR Doc. E6–13047 Filed 8–9–06; 8:45 am]

BILLING CODE 6717–01–P

DEPARTMENT OF ENERGY

Federal Energy Regulatory Commission

[Docket No. EL06–94–000]

The Borough of Chambersburg, PA and the Town of Front Royal, VA Complainants v. PJM Interconnection, L.L.C. Respondent; Notice of Complaint

August 3, 2006.

Take notice that on August 1, 2006, the Borough of Chambersburg, Pennsylvania (Chambersburg) and the Town of Front Royal, Virginia (Front Royal), together ''the Municipals'', filed a formal complaint against PJM Interconnection, L.L.C. (PJM) pursuant to sections 206 and 306 of the Federal Power Act, 16 U.S.C. §§ 824e and 825e, and sections 206 and 212 of the Commission's Rules of Practice and Procedures, 18 CFR §§ 385.206 and 385.212, alleging that PJM has unduly discriminated against the Municipals and similarly situated LSEs in the Allegheny Power zone in the allocation of Auction Revenue Rights in Stage 1 of PJM's annual ARR allocation process for the 2006–2007 Planning Year, in contravention of sections 205 and 206 of the Federal Power Act.

The Municipals certify that copies of complaint were served on the contacts for PJM as listed on the Commission's list of Corporate Officials.

Any person desiring to intervene or to protest this filing must file in accordance with Rules 211 and 214 of the Commission's Rules of Practice and Procedure (18 CFR 385.211, 385.214). Protests will be considered by the Commission in determining the appropriate action to be taken, but will not serve to make protestants parties to the proceeding. Any person wishing to become a party must file a notice of intervention or motion to intervene, as appropriate. The Respondent's answer and all interventions, or protests must be filed on or before the comment date. The Respondent's answer, motions to intervene, and protests must be served on the Complainants.

The Commission encourages electronic submission of protests and interventions in lieu of paper using the ''eFiling'' link at *http://www.ferc.gov.* Persons unable to file electronically should submit an original and 14 copies of the protest or intervention to the Federal Energy Regulatory Commission, 888 First Street, NE., Washington, DC 20426.

This filing is accessible online at *http://www.ferc.gov*, using the ''eLibrary'' link and is available for review in the Commission's Public Reference Room in Washington, DC. There is an ''eSubscription'' link on the Web site that enables subscribers to receive e-mail notification when a document is added to a subscribed docket(s). For assistance with any FERC Online service, please e-mail *FERCOnlineSupport@ferc.gov*, or call (866) 208–3676 (toll free). For TTY, call (202) 502–8659.

Comment Date: 5 p.m. Eastern Time on August 23, 2006.

Magalie R. Salas,

Secretary.

[FR Doc. E6–13066 Filed 8–9–06; 8:45 am]

BILLING CODE 6717–01–P

DEPARTMENT OF ENERGY

Federal Energy Regulatory Commission

Combined Notice of Filings #1

August 1, 2006

Take notice that the Commission received the following electric corporate filings:

Docket Numbers: EC06–144–000.

Applicants: Morgan Stanley & Company, Incorporated; EBG Holdings, LLC; Mystic I, LLC; Mystic Development, LLC; Fore River Development, LLC.

Description: Application for order granting blanket authorizations for certain future acquisitions and transfers of equity interests under Section 203 of the Federal power Act and request for waivers etc re EBG Holdings, LLC.

Filed Date: 07/27/2006.

Accession Number: 20060728–0209.

Comment Date: 5 pm Eastern Time on Thursday, August 17, 2006.

Take notice that the Commission received the following electric rate filings

Docket Numbers: ER97–4345–020; ER98–511–008.

Applicants: OGE Energy Resources Inc.; Oklahoma Gas and Electric Company.

Description: Oklahoma Gas and Electric Co et al submit revised versions of their respective market-based rate tariffs designated as Original Sheet 1 et al, FERC Electric Tariff, Fifth Revised Volume 3 et al, pursuant to the Commission's 3/20/06 Order.

Filed Date: 07/25/2006.

Accession Number: 20060727–0036.

Comment Date: 5 pm Eastern Time on Tuesday, August 15, 2006.

Docket Numbers: ER03–478–012; ER03–951–009; ER03–416–010; ER04–94–007; ER03–296–009; ER05–534–007; ER05–365–007; ER01–3121–008; ER02–418–007; ER05–332–007; ER06–1–005; ER02–417–007; ER05–1146–007; ER06–200–006; ER05–481–007; ER03–1326–005; ER05–1262–004.

Applicants: PPM Energy Inc.; Moraine Wind LLC; Klondike Wind Power LLC; Mountain View Power Partners III, LLC; Flying Cloud Power Partners, LLC; Eastern Desert Power LLC; Elk River Windfarm LLC; Klamath Energy LLC; Klamath Generation LLC; Klondike Wind Power II LLC; Leaning Juniper Wind Power LLC; Phoenix Wind Power LLC; Shiloh I Wind Project, LLC; Big Horn Wind Project LLC; Trimont Wind I LLC; Colorado Green Holdings LLC; Flat Rock Windpower LLC.

Description: PPM Energy, Inc et al submit a Notice of Change in Status, to advise FERC that PPM Energy has entered into a Scheduling and Asset Optimization Services Agreement with MMC Energy North America, LLC *et al.*

Filed Date: 07/07/2006.

Accession Number: 20060711–0102.

Comment Date: 5 pm Eastern Time on Friday, August 10, 2006.

Docket Numbers: ER06–586–003.

Applicants: Southern Minnesota Municipal Power Agency

Description: Southern Minnesota Municipal Power Agency submits updated wages and salaries allocation factor for use in Midwest ISO Attachment O Rate Template.

Filed Date: 07/25/2006.

Accession Number: 20060731–0167.

Comment Date: 5 pm Eastern Time on Tuesday, August 15, 2006.

Docket Numbers: ER06–1239–001.

Applicants: Moguai Energy LLC.

Description: Moguai Energy LLC submits an amended version of its Original Sheet 1, Electric Rate Schedule FERC No 1.

Filed Date: 07/27/2006.

Accession Number: 20060728–0208.

Comment Date: 5 pm Eastern Time on Thursday, August 17, 2006.

Docket Numbers: ER06–1283–000.

Applicants: CalPeak Power-Midway LLC.

Description: CalPeak Power-Midway, LLC submits a Notice of Cancellation of their Electric Tariff, Original Volume No 1.

Filed Date: 07/26/2006.

Accession Number: 20060728–0206.

Comment Date: 5 pm Eastern Time on Wednesday, August 16, 2006.

Docket Numbers: ER06–1284–000.

Applicants: Georgia Power Company.

Description: Georgia Power Co submits an executed amendment to its Second Revised and Restated Interconnection Agreement with Live Oaks Co, LLC, effective as of 9/25/03.

Filed Date: 07/27/2006.

Accession Number: 20060731–0166.

Comment Date: 5 pm Eastern Time on Thursday, August 17, 2006.

Docket Numbers: ER06–1285–000.

Applicants: Morgan Stanley Capital Group, Inc.

Description: Morgan Stanley Capital Group, Inc submits its amendment no. 1 to the Scheduling Services Agreement with Deseret Generation & Transmission Co-operative, Inc.

Filed Date: 07/27/2006.

Accession Number: 20060731–0165.

Comment Date: 5 pm Eastern Time on Thursday, August 17, 2006.

Docket Numbers: ER06–1286–000.

Applicants: New Hope Power Partnership.

Description: New Hope Power Partnership submits its application for market-based rate authorization and request for waivers and blanket authorizations.

Filed Date: 07/27/2006.

Accession Number: 20060731–0171.

Comment Date: 5 pm Eastern Time on Thursday, August 17, 2006.

Docket Numbers: ER06–1287–000; ER06–896–001.

Applicants: Puget Sound Energy, Inc.

Description: Puget Sound Energy Inc submits its Power Contract—Rock Island Joint System, with PUD No. 1 of Chelan County designated as 1st Rev Sheets 62 , 73, and 75, effective 5/1/06.

Filed Date: 07/26/2006.

Accession Number: 20060731–0175.

Comment Date: 5 pm Eastern Time on Wednesday, August 16, 2006.

Docket Numbers: ER06–1288–000.

Applicants: Cleco Power LLC.

Description: Cleco Power LLC submits a restated Standard Form of Network Operating Agreement included as Attachment G to its Open Access Transmission Tariff.

Filed Date: 07/27/2006.

Accession Number: 20060731–0184.

Comment Date: 5 pm Eastern Time on Thursday, August 17, 2006.

Docket Numbers: ER06–1289–000.

Applicants: Cleco Power LLC.

Description: Cleco Power LLC submits revisions to the Standard Form of Network Integration Transmission Service Agreement, First Revised Sheet 76–78, Electric Tariff, Second Revised Volume No. 1.

Filed Date: 07/27/2006.

Accession Number: 20060731–0181.

Comment Date: 5 pm Eastern Time on Thursday, August 17, 2006.

Docket Numbers: ER06–1290–000.

Applicants: PJM Interconnection, LLC.

Description: PJM Interconnection, LLC submits an executed construction service agreement with Lancaster Wind Farm, LLC.

Filed Date: 07/27/2006.

Accession Number: 20060731–0179.

Comment Date: 5 pm Eastern Time on Thursday, August 17, 2006.

Docket Numbers: ER06–1291–000.

Applicants: Mt. Tom Generating Company LLC.

Description: Mt Tom Generating Co. LLC for order accepting initial tariff,

waiving regulations, and granting blanket approvals, Electric Tariff, Original Volume No. 1, effective 9/25/06.

Filed Date: 07/27/2006.

Accession Number: 20060731–0170.

Comment Date: 5 pm Eastern Time on Thursday, August 17, 2006.

Docket Numbers: ER06–1292–000.

Applicants: Avista Corporation.

Description: Avista Corp. submits its Electric Tariff Sixth Revised Volume No. 9.

Filed Date: 07/27/2006.

Accession Number: 20060731–0169.

Comment Date: 5 pm Eastern Time on Thursday, August 17, 2006.

Take notice that the Commission received the following electric securities filings:

Docket Numbers: ES06–56–000.

Applicants: Northwestern Corporation.

Description: Northwestern Corporation submits an application for authorization to issue securities.

Filed Date: 07/19/2006.

Accession Number: 20060720–0083.

Comment Date: 5 pm Eastern Time on Wednesday, August 9, 2006.

Docket Numbers: ES06–57–000.

Applicants: AEP Texas Central Company.

Description: AEP Texas Central Company submits an application under Section 204 of the Federal Power Act for authorization to issue securities.

Filed Date: 07/28/2006.

Accession Number: 20060728–5037.

Comment Date: 5 pm Eastern Time on Friday, August 18, 2006.

Any person desiring to intervene or to protest in any of the above proceedings must file in accordance with Rules 211 and 214 of the Commission's Rules of Practice and Procedure (18 CFR 385.211 and § 385.214) on or before 5 p.m. Eastern time on the specified comment date. It is not necessary to separately intervene again in a subdocket related to a compliance filing if you have previously intervened in the same docket. Protests will be considered by the Commission in determining the appropriate action to be taken, but will not serve to make protestants parties to the proceeding. Anyone filing a motion to intervene or protest must serve a copy of that document on the Applicant. In reference to filings initiating a new proceeding, interventions or protests submitted on or before the comment deadline need not be served on persons other than the Applicant.

The Commission encourages electronic submission of protests and interventions in lieu of paper, using the FERC Online links at *http://www.ferc.gov.* To facilitate electronic service, persons with Internet access who will eFile a document and/or be listed as a contact for an intervenor must create and validate an eRegistration account using the eRegistration link. Select the eFiling link to log on and submit the intervention or protests.

Persons unable to file electronically should submit an original and 14 copies of the intervention or protest to the Federal Energy Regulatory Commission, 888 First St. NE., Washington, DC 20426.

The filings in the above proceedings are accessible in the Commission's eLibrary system by clicking on the appropriate link in the above list. They are also available for review in the Commission's Public Reference Room in Washington, DC. There is an eSubscription link on the web site that enables subscribers to receive e-mail notification when a document is added to a subscribed dockets(s). For assistance with any FERC Online service, please e-mail *FERCOnlineSupport@ferc.gov.* or call (866) 208–3676 (toll free). For TTY, call (202) 502–8659.

Magalie R. Salas,

Secretary.

[FR Doc. E6–13039 Filed 8–9–06; 8:45 am]

BILLING CODE 6717–01–P

DEPARTMENT OF ENERGY

Federal Energy Regulatory Commission

Combined Notice of Filings #1

August 2, 2006.

Take notice that the Commission received the following electric rate filings:

Docket Numbers: ER03–983–002.

Applicants: Fox Energy Company LLC.

Description: Fox Energy Company LLC submits an updated market power analysis and proposed amendments to its market-based rate schedule.

Filed Date: 07/28/2006.

Accession Number: 20060801–0102.

Comment Date: 5 p.m. Eastern Time on Friday, August 18, 2006.

Docket Numbers: ER06–1045–001.

Applicants: California Independent System Operator Corporation.

Description: California Independent System Operator Corp submits a compliance filing pursuant to the Commission 7/13/06 letter Order.

Filed Date: 07/28/2006.

Accession Number: 20060801–0101.

Comment Date: 5 p.m. Eastern Time on Friday, August 18, 2006.

Docket Numbers: ER06–1138–000.

Applicants: Fox Energy Company LLC.

Description: Fox Energy Company LLC submits a notice of withdrawal of its filing made on 6/15/06.

Filed Date: 07/28/2006.

Accession Number: 20060731–0082.

Comment Date: 5 p.m. Eastern Time on Friday, August 18, 2006.

Docket Numbers: ER06–1221–001.

Applicants: Parkview AMC Energy, LLC.

Description: Parkview AMC Energy LLC submits an application for Order Accepting Market Based Rate Tariff under ER06–1221.

Filed Date: 07/28/2006.

Accession Number: 20060801–0108.

Comment Date: 5 p.m. Eastern Time on Friday, August 18, 2006.

Docket Numbers: ER06–1293–000.

Applicants: Southern Company Services Inc.

Description: Southern Company Services, Inc. submits a roll-over service agreement for long-term firm point-to-point transmission service, Electric Tariff, Fourth Revised Volume No. 5.

Filed Date: 07/28/2006.

Accession Number: 20060731–0178.

Comment Date: 5 p.m. Eastern Time on Friday, August 18, 2006.

Docket Numbers: ER06–1294–000.

Applicants: Central Vermont Public Service Corporation.

Description: Central Vermont Public Service Corp submits an executed non-conforming point-to-point service agreement under the ISO New England Inc Tariff, Schedule 20, for service to TransAlta Energy Marketing Inc.

Filed Date: 07/28/2006.

Accession Number: 20060731–0183.

Comment Date: 5 p.m. Eastern Time on Friday, August 18, 2006.

Docket Numbers: ER06–1295–000.

Applicants: Boston Edison Company.

Description: Boston Edison Co submits an executed wholesale distribution service agreement for service to its affiliate, MATEP LLC, with an effective date of 10/1/06 under ER06–1295.

Filed Date: 07/28/2006.

Accession Number: 20060731–0182.

Comment Date: 5 p.m. Eastern Time on Friday, August 18, 2006.

Docket Numbers: ER06–1296–000.

Applicants: PJM Interconnection, L.L.C.

Description: PJM Interconnection, LLC submits an executed interconnection service agreement with WM Renewable Energy, LLC and PECO Energy Company.

Filed Date: 07/28/2006.
Accession Number: 20060731–0180.
Comment Date: 5 p.m. Eastern Time on Friday, August 18, 2006.

Docket Numbers: ER06–1297–000.
Applicants: Fox Energy Company LLC.
Description: Fox Energy Co, LLC submits a request for FERC's approval to amend Rate Schedule 2 that it is acquiring from Calpine Fox.
Filed Date: 07/28/2006.
Accession Number: 20060731–0177.
Comment Date: 5 p.m. Eastern Time on Friday, August 18, 2006.

Docket Numbers: ER06–1298–000.
Applicants: American Transmission Company LLC.
Description: American Transmission Co, LLC submits an executed Distribution-Transmission Interconnection Agreement with Oconomowoc Utilities dated 6/29/06.
Filed Date: 07/28/2006.
Accession Number: 20060731–0161.
Comment Date: 5 p.m. Eastern Time on Friday, August 18, 2006.

Docket Numbers: ER06–1299–000.
Applicants: American Transmission Company LLC.
Description: American Transmission Co LLC submits an executed Distribution-Transmission Interconnection Agreement with Waunakee Utilities dated 5/30/06.
Filed Date: 07/28/2006.
Accession Number: 20060731–0174.
Comment Date: 5 p.m. Eastern Time on Friday, August 18, 2006.

Docket Numbers: ER06–1300–000.
Applicants: American Transmission Company LLC.
Description: American Transmission Co, LLC submits an executed Distribution-Transmission Interconnection Agreement with Hustisford Utilities dated 6/29/06.
Filed Date: 07/28/2006.
Accession Number: 20060731–0176.
Comment Date: 5 p.m. Eastern Time on Friday, August 18, 2006.

Docket Numbers: ER06–1301–000.
Applicants: American Transmission Company LLC.
Description: American Transmission Co, LLC submits an executed Distribution-Transmission Interconnection Agreement with Waupun Utilities dated 5/15/06.
Filed Date: 07/28/2006.
Accession Number: 20060731–0159.
Comment Date: 5 pm Eastern Time on Friday, August 18, 2006.

Docket Numbers: ER06–1302–000.
Applicants: American Transmission Company LLC.
Description: American Transmission Co LLC submits an executed Distribution-Transmission Interconnection Agreement with Boscobel Utilities dated 5/9/06.
Filed Date: 07/28/2006.
Accession Number: 20060731–0185.
Comment Date: 5 pm Eastern Time on Friday, August 18, 2006.

Docket Numbers: ER06–1303–000.
Applicants: American Transmission Company LLC.
Description: American Transmission Co, LLC submits an executed Distribution-Transmission Interconnection Agreement with Jefferson Utilities dated 6/29/06.
Filed Date: 07/28/2006.
Accession Number: 20060731–0160.
Comment Date: 5 pm Eastern Time on Friday, August 18, 2006.

Docket Numbers: ER06–1304–000.
Applicants: American Transmission Company LLC.
Description: American Transmission Co LLC submits an executed Distribution—Transmission Interconnection Agreement with Cedarburg Light & Water Utility dated 5/26/06.
Filed Date: 07/28/2006.
Accession Number: 20060801–0005.
Comment Date: 5 pm Eastern Time on Friday, August 18, 2006.

Docket Numbers: ER06–1305–000.
Applicants: American Transmission Company LLC.
Description: American Transmission Company LLC submits an executed Distribution-Transmission Interconnection Agreement with Columbus Water & Light dated 6/29/06.
Filed Date: 07/28/2006.
Accession Number: 20060801–0007.
Comment Date: 5 pm Eastern Time on Friday, August 18, 2006.

Docket Numbers: ER06–1308–000.
Applicants: Midwest Independent Transmission System Operator, Inc.
Description: Midwest Independent Transmission System Operator Inc submits proposed Schedules 10–C, 16–A, and 17–A & certain conforming revisions to the its OAT&EM Tariff.
Filed Date: 07/31/2006.
Accession Number: 20060801–0097.
Comment Date: 5 pm Eastern Time on Monday, August 21, 2006.

Docket Numbers: ER06–1309–000.
Applicants: Southwest Power Pool, Inc.
Description: Southwest Power Pool Inc submits an executed Agreement for the Provision of Transmission Service to Missouri Bundled Retail Load with the Empire District Electric Co.
Filed Date: 07/31/2006.
Accession Number: 20060801–0096.
Comment Date: 5 pm Eastern Time on Monday, August 21, 2006.

Docket Numbers: ER06–1310–000.
Applicants: PJM Interconnection, LLC.
Description: PJM Interconnection LLC submits an agreement for network integration transmission service under its OATT with American Electric Power Service Corp as agent for Appalachian Power Company, et al.
Filed Date: 07/31/2006.
Accession Number: 20060801–0095.
Comment Date: 5 pm Eastern Time on Monday, August 21, 2006.

Docket Numbers: ER06–1311–000.
Applicants: ISO New England Inc.
Description: ISO New England, Inc submits its non-conforming Market Participant Service Agreements with Freedom Partners, LLC et al.
Filed Date: 07/31/2006.
Accession Number: 20060801–0094.
Comment Date: 5 pm Eastern Time on Monday, August 21, 2006.

Docket Numbers: ER06–1312–000.
Applicants: Empire District Electric Co.
Description: Empire District Electric Co submits the Third Revised Sheet 1 of its market-based rate tariff, revised to authorize the sell of imbalance energy into Southwest Power Pool Inc.'s energy imbalance market.
Filed Date: 07/31/2006.
Accession Number: 20060801–0107.
Comment Date: 5 pm Eastern Time on Monday, August 21, 2006.

Docket Numbers: ER06–1313–000.
Applicants: Westar Energy Inc.; Kansas Gas and Electric Company.
Description: Westar Energy Inc and Kansas Gas and Elec Co submit Third Revised Sheet 1 of its market based rate tariff, revised to authorized to sell imbalance energy into the Southwest Power Pool Inc energy imbalance market.
Filed Date: 07/31/2006.
Accession Number: 20060801–0106.
Comment Date: 5 pm Eastern Time on Monday, August 21, 2006.

Docket Numbers: ER06–1314–000.
Applicants: E.ON U.S., LLC.
Description: E.ON U.S. LLC submits Amendment 23 to an Interconnection Agreement with East Kentucky Power Cooperative.
Filed Date: 07/31/2006.
Accession Number: 20060801–0105.
Comment Date: 5 pm Eastern Time on Monday, August 21, 2006.

Docket Numbers: ER06–1315–000.
Applicants: Midwest Independent Transmission System Operator, Inc.
Description: Midwest Independent Transmission System Operator Inc submits proposed revisions to Attachment X—Standard Large Generator Interconnection Procedures et al of its OAT&EM Tariff.

Filed Date: 07/31/2006.

Accession Number: 20060801–0104.

Comment Date: 5 pm Eastern Time on Monday, August 21, 2006.

Docket Numbers: ER06–1316–000.

Applicants: PJM Interconnection, L.L.C.

Description: PJM Interconnection, LLC submits an agreement for Network Integration Transmission Service under its OATT.

Filed Date: 07/31/2006.

Accession Number: 20060801–0103.

Comment Date: 5 pm Eastern Time on Monday, August 21, 2006.

Docket Numbers: ER06–1317–000.

Applicants: PJM Interconnection, LLC.

Description: PJM Interconnection LLC submits a Network Integration Transmission Service Agreement with Wabash Valley Power Association, Inc.

Filed Date: 07/31/2006.

Accession Number: 20060801–0100.

Comment Date: 5 pm Eastern Time on Monday, August 21, 2006.

Docket Numbers: ER06–1318–000.

Applicants: Southwest Power Pool, Inc.

Description: Southwest Power Pool Inc submits an executed Agreement for the Provision of Transmission Service to Missouri Bundled Retailed Load with Kansas City Power & Light Co *et al.*

Filed Date: 07/31/2006.

Accession Number: 20060801–0109.

Comment Date: 5 pm Eastern Time on Monday, August 21, 2006.

Take notice that the Commission received the following electric securities filings

Docket Numbers: ES06–58–000.

Applicants: MDU Resources Group, Inc.

Description: MDU Resources, Group Inc submits an application for authority to issue an additional 400,000 shares of Company Common Stock in connection with its Non-Employee Director Stock Compensation Plan under ES06–58.

Filed Date: 07/28/2006.

Accession Number: 20060801–0098.

Comment Date: 5 pm Eastern Time on Friday, August 18, 2006.

Any person desiring to intervene or to protest in any of the above proceedings must file in accordance with Rules 211 and 214 of the Commission's Rules of Practice and Procedure (18 CFR 385.211 and § 385.214) on or before 5 p.m. Eastern time on the specified comment date. It is not necessary to separately intervene again in a subdocket related to a compliance filing if you have previously intervened in the same docket. Protests will be considered by the Commission in determining the appropriate action to be taken, but will not serve to make protestants parties to the proceeding. Anyone filing a motion to intervene or protest must serve a copy of that document on the Applicant. In reference to filings initiating a new proceeding, interventions or protests submitted on or before the comment deadline need not be served on persons other than the Applicant.

The Commission encourages electronic submission of protests and interventions in lieu of paper, using the FERC Online links at *http://www.ferc.gov.* To facilitate electronic service, persons with Internet access who will eFile a document and/or be listed as a contact for an intervenor must create and validate an eRegistration account using the eRegistration link. Select the eFiling link to log on and submit the intervention or protests.

Persons unable to file electronically should submit an original and 14 copies of the intervention or protest to the Federal Energy Regulatory Commission, 888 First St., NE., Washington, DC 20426.

The filings in the above proceedings are accessible in the Commission's eLibrary system by clicking on the appropriate link in the above list. They are also available for review in the Commission's Public Reference Room in Washington, DC There is an eSubscription link on the Web site that enables subscribers to receive e-mail notification when a document is added to a subscribed docket(s). For assistance with any FERC Online service, please e-mail *FERCOnlineSupport@ferc.gov.* or call (866) 208–3676 (toll free). For TTY, call (202) 502–8659.

Magalie R. Salas,

Secretary.

[FR Doc. E6–13041 Filed 8–9–06; 8:45 am]

BILLING CODE 6717–01–P

DEPARTMENT OF ENERGY

Federal Energy Regulatory Commission

[Project No. 2107–016]

Pacific Gas and Electric Company California; Notice of Availability of Draft Environmental Assessment

August 2, 2006.

In accordance with the National Environmental Policy Act of 1969 and the Federal Energy Regulatory Commission's (Commission) regulations, 18 CFR part 380 (Order No. 486, 52 FR 47897), the Office of Energy Projects has reviewed the application for license for the Poe Hydroelectric Project, located on the North Fork Feather River in Butte County, California, and has prepared a Draft Environmental Assessment (DEA) for the project. The Project occupies 144 acres of lands of the United States, which are administered by the Forest Supervisor of the Plumas National Forest.

The DEA contains the staff's analysis of the potential environmental impacts of the project and concludes that licensing the project, with appropriate environmental protective measures, would not constitute a major Federal action that would significantly affect the quality of the human environment.

A copy of the DEA is available for review at the Commission in the Public Reference Room or may be viewed on the Commission's Web site at *http://www.ferc.gov* using the ''eLibrary'' link. Enter the docket number excluding the last three digits in the docket number field to access the document. For assistance, contact FERC Online Support at *FERCOnlineSupport@ferc.gov* or toll-free at 1–866–208–3676, or for TTY, (202) 502–8659.

You may also register online at *http://www.ferc.gov/docs-filing/esubscription.asp* to be notified via e-mail of new filings and issuances related to this or other pending projects. For assistance, contact FERC Online Support.

Any comments should be filed within 45 days from the date of this notice and should be addressed to Magalie R. Salas, Secretary, Federal Energy Regulatory Commission, 888 First Street, NE., Washington, DC 20426. Please affix Project No. 2107–016 to all comments. Comments may be filed electronically via the Internet in lieu of paper. The Commission strongly encourages electronic filings. See 18 CFR 385.2001(a)(1)(iii) and the instructions on the Commission's Web site (*http://www.ferc.gov*) under the ''e-Filing'' link.

For further information, contact John Mudre at (202) 502–8902.

Magalie R. Salas,

Secretary.

[FR Doc. E6–13048 Filed 8–9–06; 8:45 am]

BILLING CODE 6717–01–P

DEPARTMENT OF ENERGY

Federal Energy Regulatory Commission

Notice of Application and Soliciting Comments, Motions to Intervene, and Protests

August 2, 2006.

Take notice that the following application has been filed with the Commission and is available for public inspection:

a. *Application Type:* Shoreline Management Plan.

b. *Project No:* 2576–083.

c. *Date Filed:* July 27, 2006.

d. *Applicant:* Northeast Generation Company (NGC).

e. *Name of Project:* Housatonic River Hydroelectric Project.

f. *Location:* The project is located on the Housatonic River, in Fairfield, Litchfield and New Haven Counties, Connecticut.

g. *Filed Pursuant to:* Federal Power Act, 16 U.S.C. 791(a)–825(r).

h. *Applicant Contact:* Mr. Robert Gates, Station Manager—Connecticut Hydro, 143 West St., Ext. Suite E, New Milford, CT 06776, (860) 355–6527.

i. *FERC Contact:* Any questions on this notice should be addressed to Isis Johnson at (202) 502–6346, or by E-mail: *Isis.Johnson@ferc.gov*.

j. *Deadline for filing comments:* September 1, 2006.

All documents (original and eight copies) should be filed with: Ms. Magalie R. Salas, Secretary, Federal Energy Regulatory Commission, DHAC, PJ–12.1, 888 First Street, NE., Washington DC 20426. Please include the project number (2576–083) on any comments or motions filed. Comments, protests and interventions may be filed electronically via the Internet in lieu of paper. See, 18 CFR 385.2001(a)(1)(iii) and the instructions on the Commission's Web site under the ''e-Filing'' link. The Commission strongly encourages electronic filings.

k. *Description of Proposal:* NGC, licensee for the Housatonic River Project, submitted a Shoreline Management Plan (SMP) as required by the project license. The proposed SMP provides for the maintenance of safe public access to lake shorelines and riverfront lands and waters, as well as for the stewardship and development of shoreline/riverfront areas. The SMP also contains provisions to promote the conservation of land and water-related resources, in addition to promoting education and public awareness of resource protection and management programs. The SMP also includes guidelines for permitting new and existing structures on project lands, and a fee schedule to recover the administrative costs of implementing the permitting program.

l. This filing is available for review at the Commission in the Public Reference Room or may be viewed on the Commission's Web site at *http://www.ferc.gov* using the ''eLibrary'' link. Enter the docket number excluding the last three digits in the docket number field to access the document. For assistance, contact FERC Online Support at *FERCOnlineSupport@ferc.gov* or call toll-free 1–866–208–3676, or for TTY, call (202) 502–8659.

m. Individuals desiring to be included on the Commission's mailing list should so indicate by writing to the Secretary of the Commission.

n. *Comments, Protests, or Motions to Intervene:* Anyone may submit comments, a protest, or a motion to intervene in accordance with the requirements of Rules of Practice and Procedure, 18 CFR 385.210, 385.211, 385.214. In determining the appropriate action to take, the Commission will consider all protests or other comments filed, but only those who file a motion to intervene in accordance with the Commission's Rules may become a party to the proceeding. Any comments, protests, or motions to intervene must be received on or before the specified comment date for the particular application.

o. *Filing and Service of Responsive Documents:* Any filings must bear in all capital letters the title ''COMMENTS'', ''RECOMMENDATIONS FOR TERMS AND CONDITIONS'', ''PROTEST'', or ''MOTION TO INTERVENE'', as applicable, and the Project Number of the particular application to which the filing refers. A copy of any motion to intervene must also be served upon each representative of the Applicant specified in the particular application.

p. *Agency Comments:* Federal, state, and local agencies are invited to file comments on the described application. A copy of the application may be obtained by agencies directly from the Applicant. If an agency does not file comments within the time specified for filing comments, it will be presumed to have no comments. One copy of an agency's comments must also be sent to the Applicant's representatives.

Magalie R. Salas,

Secretary.

[FR Doc. E6–13049 Filed 8–9–06; 8:45 am]

BILLING CODE 6717–01–P

DEPARTMENT OF ENERGY

Federal Energy Regulatory Commission

[Project No. 925–010]

City of Ottumwa, IA; Notice of Application Accepted for Filing and Soliciting Motions To Intervene and Protests

August 3, 2006.

Take notice that the following hydroelectric application has been filed with the Commission and is available for public inspection.

a. *Type of Application:* New License.

b. *Project No.:* P–925–010.

c. *Date Filed:* April 26, 2006.

d. *Applicant:* City of Ottumwa, Iowa.

e. *Name of Project:* Ottumwa Hydroelectric Project.

f. *Location:* On the Des Moines River in the City of Ottumwa, Wapello County, Iowa. The project does not occupy Federal lands.

g. *Filed Pursuant to:* Federal Power Act 16 U.S.C. 791(a)–825(r).

h. *Applicant Contact:* Richard Wilcox, Ottumwa Water and Hydro, 230 Turner Drive, Ottumwa, Iowa 52501, (641) 684–4606.

i. *FERC Contact:* Tim Konnert, (202) 502–6359 or *timothy.konnert@ferc.gov.*

j. *Deadline for filing motions to intervene and protests:* October 2, 2006.

All documents (original and eight copies) should be filed with: Magalie R. Salas, Secretary, Federal Energy Regulatory Commission, 888 First Street, NE., Washington, DC 20426.

The Commission's Rules of Practice and Procedure require all intervenors filing documents with the Commission to serve a copy of that document on each person whose name appears on the official service list for the project. Further, if an intervenor files comments or documents with the Commission relating to the merits of an issue that may affect the responsibilities of a particular resource agency, they must also serve a copy of the document on that resource agency.

Motions to intervene and protests may be filed electronically via the Internet in lieu of paper. The Commission strongly encourages electronic filings. See CFR 385.2001 (a) (1) (iii) and the instructions on the Commission's Web site (*http://www.ferc.gov*) under the ''eFiling'' link.

k. This application has been accepted, but is not ready for environmental analysis at this time.

l. The existing Ottumwa Project consists of: (1) An 18-foot-high dam with a 641-foot-long spillway section equipped with eight tainter gates and one bascule gate; (2) a powerhouse

integral to the dam containing three generating units, unit 1 and unit 3 each rated at 1,000 kW and unit 2 rated at 1,250 kW; (3) a 125-acre reservoir with a normal water surface elevation of 638.5 feet msl; and (4) appurtenant facilities. The applicant estimates that the average annual generation would be 10,261,920 kilowatt hours using the three generating units with a combined capacity of 3,250 kW.

m. A copy of the application is available for review at the Commission in the Public Reference Room or may be viewed on the Commission's Web site at *http://www.ferc.gov* using the ''eLibrary'' link. Enter the docket number excluding the last three digits in the docket number field to access the document. For assistance, contact FERC Online Support at *FERCOnlineSupport@ferc.gov* or toll-free at 1–866–208–3676, or for TTY, (202) 502–8659. A copy is also available for inspection and reproduction at the address in item h. above.

You may also register online at *http://www.ferc.gov/esubscribenow.htm* to be notified via e-mail of new filings and issuances related to this or other pending projects. For assistance, contact FERC Online Support.

n. Anyone may submit a protest or a motion to intervene in accordance with the requirements of Rules of Practice and Procedure, 18 CFR 385.210, 385.211, and 385.214. In determining the appropriate action to take, the Commission will consider all protests filed, but only those who file a motion to intervene in accordance with the Commission's Rules may become a party to the proceeding. Any protests or motions to intervene must be received on or before the specified deadline date for the particular application.

All filings must (1) bear in all capital letters the title ''PROTEST'' or ''MOTION TO INTERVENE''; (2) set forth in the heading the name of the applicant and the project number of the application to which the filing responds; (3) furnish the name, address, and telephone number of the person protesting or intervening; and (4) otherwise comply with the requirements of 18 CFR 385.2001 through 385.2005. Agencies may obtain copies of the application directly from the applicant. A copy of any protest or motion to intervene must be served upon each representative of the applicant specified in the particular application.

o. Procedural schedule and final amendments: The application will be processed according to the following Hydro Licensing Schedule. Revisions to the schedule will be made as appropriate. The Commission staff proposes to issue one environmental assessment rather than issue a draft and final EA. Comments, terms and conditions, recommendations, prescriptions, and reply comments, if any, will be addressed in the EA. Staff intends to give at least 30 days for entities to comment on the EA before final action is taken on the license application.

Issue Scoping Document for Comments: August 2006.

Notice of application ready for environmental analysis: November 2006.

Notice of the availability of the EA: March 2007.

Ready for Commission's decision on the Application: May 2007.

Final amendments to the application must be filed with the Commission no later than 30 days from the issuance date of the notice of ready for environmental analysis.

Magalie R. Salas,

Secretary.

[FR Doc. E6–13060 Filed 8–9–06; 8:45 am]

BILLING CODE 6717–01–P

DEPARTMENT OF ENERGY

Federal Energy Regulatory Commission

Notice of Application for Amendment of License and Soliciting Comments, Motions To Intervene, and Protests

August 3, 2006.

Take notice that the following application has been filed with the Commission and is available for public inspection:

a. *Application Type:* Amendment of license to increase the installed capacity.

b. *Project No.:* 2330–063.

c. *Date Filed:* July 3, 2006.

d. *Applicant:* Erie Boulevard Hydropower, L.P.

e. *Name of Project:* Lower Raquette River Project.

f. *Location:* The Lower Raquette River Project is located on the Raquette River in the towns of Potsdam and Norwood in St. Lawrence County, New York.

g. *Filed Pursuant to:* Federal Power Act, 16 U.S.C. 791a–825r.

h. *Applicant Contact:* Mr. Samuel Hirschey, P.E., Erie Boulevard Hydropower, L.P., 225 Greenfield Parkway, Suite 201, Liverpool, New York, 13088, telephone: (315) 413–2790.

i. *FERC Contact:* Any questions on this notice should be addressed to Ms. Linda Stewart at (202) 502–6680, or e-mail address: *linda.stewart@ferc.gov*.

j. *Deadline for filing comments and or motions:* September 5, 2006.

The Commission's Rules of Practice and Procedure require all intervenors filing documents with the Commission to serve a copy of that document on each person in the official service list for the project. Further, if an intervenor files comments or documents with the Commission relating to the merits of an issue that may affect the responsibilities of a particular resource agency, they must also serve a copy of the document on that resource agency.

k. *Description of Request:* Erie Boulevard Hydropower, L.P. proposes to increase the installed capacity of the Lower Raquette River Project by replacing the existing turbine in the powerhouse of each of the four developments: Norwood, East Norfolk, Norfolk, and Raymondville. The proposed turbine upgrades would facilitate a change at all four developments from the existing store and release mode of operation to a run-of-river mode of operation. The total installed capacity of the project would increase from 12.0 megawatts to 18.5 megawatts and the total hydraulic capacity of the project would increase from 6,625 cubic feet per second to 8,503 cubic feet per second.

Additionally, Erie Boulevard Hydropower, L.P. proposes to accelerate the implementation of the one-inch clear spacing trashracks and fish movement flow at the Norwood development from 2010 (pursuant to the April 22, 1998, Raquette River Settlement Agreement) to 2007. The licensee also proposes to install upstream eel passage at all four developments.

l. *Locations of the Application:* A copy of the application is available for inspection and reproduction at the Commission's Public Reference Room, located at 888 First Street, NE., Room 2A, Washington, DC 20426, or by calling (202) 502–8371. Information about this filing may also be viewed on the Commission's Web site at *http://www.ferc.gov* using the ''eLibrary'' link. Enter the docket number excluding the last three digits in the docket number field to access the document. You may also register online at *http://www.ferc.gov/docs-filing/esubscription.asp* to be notified via e-mail of new filings and issuances related to this or other pending projects. For assistance, call 1–866–208–3676 or e-mail *FERCOnlineSupport@ferc.gov*, for TTY, call (202) 502–8659. A copy is also available for inspection and reproduction at the address in item (h) above.

m. Individuals desiring to be included on the Commission's mailing list should so indicate by writing to the Secretary of the Commission.

n. *Comments, Protests, or Motions to Intervene:* Anyone may submit comments, a protest, or a motion to intervene in accordance with the requirements of Rules of Practice and Procedure, 18 CFR 385.210, 385.211, 385.214. In determining the appropriate action to take, the Commission will consider all protests or other comments filed, but only those who file a motion to intervene in accordance with the Commission's Rules may become a party to the proceeding. Any comments, protests, or motions to intervene must be received on or before the specified comment date for the particular application.

o. *Filing and Service of Responsive Documents:* Any filings must bear in all capital letters the title ''COMMENTS'', ''RECOMMENDATIONS FOR TERMS AND CONDITIONS'', ''PROTEST'', or ''MOTION TO INTERVENE'', as applicable, and the Project Number of the particular application to which the filing refers. All documents (original and eight copies) should be filed with: Magalie R. Salas, Secretary, Federal Energy Regulatory Commission, 888 First Street, NE., Washington DC 20426. A copy of any motion to intervene must also be served upon each representative of the Applicant specified in the particular application.

p. *Agency Comments:* Federal, state, and local agencies are invited to file comments on the described application. A copy of the application may be obtained by agencies directly from the Applicant. If an agency does not file comments within the time specified for filing comments, it will be presumed to have no comments. One copy of an agency's comments must also be sent to the Applicant's representatives.

q. Comments, protests and interventions may be filed electronically via the Internet in lieu of paper. See, 18 CFR 385.2001(a)(1)(iii) and the instructions on the Commission's Web site at *http://www.ferc.gov* under the ''e-Filing'' link.

Magalie R. Salas,

Secretary.

[FR Doc. E6–13067 Filed 8–9–06; 8:45 am]

BILLING CODE 6717–01–P

DEPARTMENT OF ENERGY

Federal Energy Regulatory Commission

[Docket No. CP06–54–000]

Broadwater Energy, LLC; Notice of Technical Meeting

August 2, 2006.

On Tuesday August 22, 2006, at 10 a.m. (EDT), staff of the Office of Energy Projects will meet with representatives of the U.S. Coast Guard and Broadwater Energy, LLC regarding the proposed Broadwater Floating Storage Regasification Unit. The purpose of the meeting is to discuss technical information requested on June, 20, 2006, as a follow-up to the June, 6 and 7, 2006, Cryogenic Design and Technical Conference in Port Jefferson, New York. The meeting will be held in Room 3M–3 at the Federal Energy Regulatory Commission located at 888 1st Street, NE., Washington, DC.

In view of the nature of critical energy infrastructure information and security issues to be explored, the meeting will not be open to the public. Attendance at this meeting will be limited to existing parties to the proceeding (anyone who has specifically requested to intervene as a party) and to representatives of interested Federal, state, and local agencies. Any person planning to attend the August 22, 2006, meeting must register by close of business on Monday, August 21, 2006. Registrations may be submitted either online at *http://www.ferc.gov/whats-new/registration/cryo-conf-form.asp* or by faxing a copy of the form (found at the referenced online link) to 202–208–0353. All attendees must sign a non-disclosure statement prior to entering the meeting. For additional information regarding the meeting, please contact Phil Suter at *phillip.suter@ferc.gov* or 202–502–6368.

FERC conferences are accessible under section 508 of the Rehabilitation Act of 1973. For accessibility accommodations please send an e-mail to *accessibility@ferc.gov* or call toll free 1–866–208–3372 (voice) or 202–208–1659 (TTY), or send a fax to 202–208–2106 with the required accommodations.

Magalie R. Salas,

Secretary.

[FR Doc. E6–13046 Filed 8–9–06; 8:45 am]

BILLING CODE 6717–01–P

DEPARTMENT OF ENERGY

Federal Energy Regulatory Commission

[Docket Nos. RP05–422–000, RP06–431–000, RP06–392–000, RP06–392–001, RP06–368–000, RP06–226–000]

El Paso Natural Gas Company; Notice of Technical Conference

August 3, 2006.

On June 30, 2005, El Paso Natural Gas Company (El Paso) filed revised tariff sheets pursuant to section 4 of the Natural Gas Act and part 154 of the Commission's regulations. In its filing, El Paso proposed a number of new services, a rate increase for existing services, and changes in certain terms and conditions of service. On July 29, 2005, the Commission issued an order accepting and suspending the tariff sheets, subject to refund and conditions, establishing hearing procedures, and establishing a technical conference (112 FERC ¶ 61,150 (2005)). On March 23, 2006, the Commission issued an order on technical conference (114 FERC ¶ 61,305 (2006)). The March 23 order stated that, if the parties believed that an additional technical conference would assist the shippers, the Commission would schedule an additional conference. A number of shippers have requested a technical conference in the above-captioned proceedings.

Take notice that a technical conference to discuss issues related to Maximum Delivery Obligation and Maximum Hourly Obligation allocations, implementation of new services and penalties will be held on Thursday, August 17, 2006 at 10 am (EST), in a room to be designated at the offices of the Federal Energy Regulatory Commission, 888 First Street, NE., Washington, DC 20426.

FERC conferences are accessible under section 508 of the Rehabilitation Act of 1973. For accessibility accommodations please send an e-mail to *accessibility@ferc.gov* or call toll free 1–866–208–3372 (voice) or 202–502–8659 (TTY), or send a fax to 202–208–2106 with the required accommodations.

All parties and staff are permitted to attend. For further information please contact Ingrid Olson at (202) 502–8406 or e-mail *ingrid.olson@ferc.gov*

Magalie R. Salas,

Secretary.

[FR Doc. E6–13070 Filed 8–9–06; 8:45 am]

BILLING CODE 6717–01–P

DEPARTMENT OF ENERGY

Southwestern Power Administration

Robert D. Willis Power Rate

AGENCY: Southwestern Power Administration, DOE.

ACTION: Notice of public review and comment.

SUMMARY: The Administrator, Southwestern Power Administration (Southwestern), has prepared Current and Revised 2006 Power Repayment Studies (PRS) that show the need for an increase in annual revenues to meet cost recovery criteria. Such increased revenues are required primarily due to significant increases in U.S. Army Corps of Engineers' generation investment at the project. The Administrator has developed a proposed Robert D. Willis rate schedule, which is supported by a PRS, to recover the required revenues. Beginning January 1, 2007, the proposed rates would increase annual revenues approximately 25.8 percent from $648,096 to $815,580.

DATES: The consultation and comment period will begin on the date of publication of this **Federal Register** notice and will end October 10, 2006. A combined Public Information and Comment Forum will be held in Tulsa, Oklahoma at 1 p.m. central time on September 14, 2006.

ADDRESSES: If the Forum is requested, it will be held in Southwestern's offices, Room 1402, Williams Center Tower I, One West Third Street, Tulsa, Oklahoma 74103.

FOR FURTHER INFORMATION CONTACT: Mr. Forrest E. Reeves, Assistant Administrator, Office of Corporate Operations, Southwestern Power Administration, U.S. Department of Energy, One West Third Street, Tulsa, Oklahoma 74103, (918) 595–6696, *gene.reeves@swpa.gov*.

SUPPLEMENTARY INFORMATION: The Department of Energy was created by an Act of the U.S. Congress, Department of Energy Organization Act, Pub. L. 95–91, dated August 4, 1977. Southwestern's power marketing activities were transferred from the Department of the Interior to the Department of Energy (DOE), effective October 1, 1977. Guidelines for preparation of the PRS are included in DOE Order No. RA 6120.2 entitled Power Marketing Administration Financial Reporting. Procedures for Public Participation in Power and Transmission Rate Adjustments of the Power Marketing Administrations are found at Title 10, part 903, Subpart A of the Code of Federal Regulations (10 CFR part 903). Procedures for the confirmation and approval of rates for the Federal Power Marketing Administrations are found at Title 18, part 300, Subpart L of the Code of Federal Regulations (18 CFR part 300).

Southwestern markets power from 24 multi-purpose reservoir projects, with hydroelectric power facilities constructed and operated by the U.S. Army Corps of Engineers. These projects are located in the states of Arkansas, Missouri, Oklahoma, and Texas. Southwestern's marketing area includes these states plus Kansas and Louisiana. The costs associated with the hydropower facilities of 22 of the 24 projects are repaid via revenues received under the Integrated System rates, as are Southwestern's transmission facilities that consist of 1,380 miles of high-voltage transmission lines, 24 substations, and 46 microwave and VHF radio sites. Costs associated with the Robert D. Willis and Sam Rayburn Dams, two projects that are isolated hydraulically, electrically, and financially from the Integrated System are repaid by separate rate schedules.

Following DOE guidelines Southwestern's Administrator prepared a Current PRS using the existing Robert D. Willis rate. The Study indicates that Southwestern's legal requirement to repay the investment in the power generating facility for power and energy marketed by Southwestern will not be met without an increase in revenues. The need for increased revenues is due to significant increases in generation investment at the project. The Revised PRS shows that an increase in annual revenue of $167,484 (a 25.8 percent increase), beginning January 1, 2007, is needed to satisfy repayment criteria.

Opportunity is presented for Southwestern customers and other interested parties to receive copies of the Robert D. Willis Power Repayment Studies and the proposed rate schedule. If you desire a copy of the Robert D. Willis Power Repayment Data Package with the proposed Rate Schedule, submit your request to Mr. Forrest E. Reeves, Assistant Administrator, Office of Corporate Operations, Southwestern Power Administration, One West Third Street, Tulsa, OK 74103, (918) 595–6696 or via e-mail to *swparates@swpa.gov*.

A Public Information and Comment Forum (Forum) is scheduled to be held on September 14, 2006, to explain to customers and interested parties the proposed rate and supporting studies. The proceeding will be transcribed, if held. A chairman, who will be responsible for orderly procedure, will conduct the Forum. Questions concerning the rate, studies, and information presented at the Forum will be answered, to the extent possible, at the Forum. Questions not answered at the Forum will be answered in writing. However, questions involving voluminous data contained in Southwestern's records may best be answered by consultation and review of pertinent records at Southwestern's offices.

Persons interested in attending the Forum should indicate in writing by letter, email, or facsimile transmission (918–525–6656) by September 5, 2006, their intent to appear at such Forum. Should no one indicate an intent to attend by the above-cited deadline, no such Forum will be held.

Persons interested in speaking at the Forum should indicate in writing by letter, email, or facsimile transmission (918–525–6656) at least seven (7) calendar days prior to the Forum so that a list of speakers can be developed. The chairman may allow others to speak if time permits.

A transcript of the Forum will be made. Copies of the transcripts may be obtained directly from the transcribing service for a fee. Copies of all documents introduced will also be available from the transcribing service for a fee.

Written comments on the proposed Robert D. Willis Rate are due on or before October 10, 2006. Five copies of the written comments, together with a diskette in MS Word or Corel Word Perfect, should be submitted to Forrest E. Reeves, Assistant Administrator, Southwestern Power Administration, U.S. Department of Energy, One West Third Street, Tulsa, Oklahoma 74103.

Following review of the oral and written comments and the information gathered during the course of the proceedings, the Administrator will submit the final Robert D. Willis Rate Proposal, and Power Repayment Studies in support of the proposed rate to the Deputy Secretary of Energy for confirmation and approval on an interim basis, and subsequently to the Federal Energy Regulatory Commission (FERC) for confirmation and approval on a final basis. The FERC will allow the public an opportunity to provide written comments on the proposed rate increase before making a final decision.

Dated: July 27, 2006.

Michael A. Deihl,

Administrator.

[FR Doc. E6–13030 Filed 8–9–06; 8:45 am]

BILLING CODE 6450–01–P

DEPARTMENT OF ENERGY

Western Area Power Administration

The Central Valley Project-Rate Order No. WAPA–128

AGENCY: Western Area Power Administration, DOE.

ACTION: Notice of Order Concerning Reactive Power and Voltage Control Revenue Requirement Component.

SUMMARY: The Deputy Secretary of Energy confirmed and approved Rate Order No. WAPA–128 and Rate Schedules CV–F12, CV–T2, CV–NWT4, PACI–T2, and COTP–T2 that revise the Transmission Revenue Requirement (TRR) associated with Reactive Power and Voltage Control from the Central Valley Project (CVP) and other non-Federal Generation Sources Service (VAR Support) and place new formula rates into effect on an interim basis. The provisional formula rates will be in effect until the Federal Energy Regulatory Commission (Commission) confirms, approves, and places them into effect on a final basis or until replaced by other rates. The provisional rates will provide sufficient revenue to pay all annual costs, including interest expense, and repay power investment and irrigation aid, within the allowable periods.

DATES: Rate Schedules CV–F12, CV–T2, CV–NWT4, PACI–T2, and COTP–T2 will be placed into effect on an interim basis on the first day of the first full billing period beginning on or after September 1, 2006, and will be in effect until the Commission confirms, approves, and places the rate schedules in effect on a final basis through September 30, 2009, or until the rate schedules are superseded.

FOR FURTHER INFORMATION CONTACT: Mr. James D. Keselburg, Regional Manager, Sierra Nevada Customer Service Region, Western Area Power Administration, 114 Parkshore Drive, Folsom, CA 95630–4710, (916) 353–4418, or Mr. Sean Sanderson, Rates Manager, Sierra Nevada Customer Service Region, Western Area Power Administration, 114 Parkshore Drive, Folsom, CA 95630–4710, (916) 353–4466, e-mail: *sander@wapa.gov*.

SUPPLEMENTARY INFORMATION: The current formula rates for transmission service on the CVP (CV–T1 and CV–NWT3), the Pacific Alternating Current Intertie (PACI) (PACI–T1), and the California-Oregon Transmission Project (COTP) (COTP–T1) transmission systems are based on a TRR that includes CVP and other non-Federal generator costs for providing VAR Support. This rate adjustment will remove the VAR Support (also known as reactive power) costs from the TRR. The Western Area Power Administration (Western) will collect the revenue requirement for CVP VAR Support costs in the power revenue requirement (PRR) under power rate schedule CV–F12.

The Deputy Secretary of Energy approved existing Rate Schedules CV–T1, CV–NWT3, PACI–T1, and COTP–T1 for transmission service and CV–F11 for Base Resource and First Preference Power on November 18, 2004 (Rate Order No. WAPA–115, 69 FR 70510, December 6, 2004), and the Commission confirmed and approved the rate schedules on October 11, 2005, under FERC Docket No. EF0–5011–000 (113 FERC ¶ 61,026). The existing rate schedules are effective from January 1, 2005, through September 30, 2009.

The April 1, 2006, update of the approved transmission rates resulted in annual CVP VAR Support costs of $358,374. Western's Sierra Nevada Region (SNR) currently estimates its annual costs associated with the CVP and other non-Federal generator VAR Support to be $1,221,240. This increase in cost is attributable to the inclusion of non-Federal generator VAR Support costs that SNR began paying in December 2005. VAR Support costs are assigned pro rata to the respective transmission systems on a capacity basis and are one of the cost components contained in Component 1 of the CVP, PACI, and COTP formula rates.

In implementing Western's Open Access Transmission Tariff (OATT), Western separated its merchant function from Western's reliability function. All generators connected to Western's transmission system have an obligation to provide reactive power within the bandwidth (commonly referred to as the deadband) as a part of their obligation to maintain interconnected transmission system reliability. By including CVP reactive power and voltage control costs in SNR's TRR, SNR in certain circumstances, may be treating its merchant in a manner not comparable with other transmission customers. Under SNR's current rates, all transmission customers, including a transmission customer with a generator directly connected to SNR's system, are obligated to pay SNR for the cost of VAR Support. As a result, a transmission customer with a generation interconnection with SNR that provides VAR Support according to the Western Electric Coordinating Council reliability requirements would also be paying SNR for CVP VAR Support; however, SNR would not be paying such a transmission customer. Western believes that both Federal generators and non-Federal generators should be treated comparably when they provide VAR Support.

To mitigate the current comparability discrepancy between Federal and non-Federal generators, SNR asked for comments from interested parties on whether SNR should:

(1) Take no action and continue with the existing rate, (2) roll all VAR Support costs from both types of generators into SNR's TRR, or (3) exclude all VAR Support from both types of generators from SNR's TRR. SNR proposed to exclude all VAR Support costs from SNR's TRR (71 FR 10666, March 2, 2006). After considering comments received, SNR recommended implementation of the third option to the Deputy Secretary of the Department of Energy (DOE).

As part of a settlement agreement approved by the Commission on February 29, 2006, in FERC Docket No. ER05–912–000, Calpine Construction Finance Company, L.P. (114 FERC ¶ 61,217), SNR agreed to pay the Calpine Construction Finance Company (CCFC) for reactive power subject to the outcome of this rate proceeding. Currently, CCFC is the only non-Federal, interconnected generator being compensated by SNR for VAR Support under the settlement agreement. SNR intends to mitigate this disparity and treat every generator directly connected to SNR's transmission system in a comparable fashion. One reason for this decision is that SNR cannot determine the cost that SNR would be required to pay in the future for all the costs associated with all such facilities. The obligation to provide such payments could create an open, indefinite, and undefined future liability for SNR. Under the Anti-Deficiency Act, 31 U.S.C. 1341, Western cannot commit to paying an open, indefinite future obligation. On the other hand, if SNR excludes both the Federal and non-Federal generator costs for VAR Support in the TRR, it would ultimately fall to the customers who purchase power from the generator to pay for such costs. Customers who receive power from SNR, through Rate Schedule CV–F11, currently pay VAR Support costs in the PRR including the VAR Support associated with network service. Also included are VAR Support costs associated with the Rate Schedules PACI–T1 and COTP–T1 if not recovered from contracted sales. By excluding the VAR Support component from the TRR, SNR can accurately determine the costs associated with transmission service. Furthermore, Western has a statutory duty to ensure that its rates are the

lowest cost possible consistent with sound business principles under Delegation Order No. 00–037.00. While SNR's power customers would be obligated to pay SNR for all costs associated with reactive power from the generators in its power rates, the overall cost to SNR's power customers would be lower and more predictable since they are paying for only the costs associated with the Federal generators. Excluding all reactive power costs for SNR's TRR is consistent with Western's statutory duties, therefore, SNR has adopted option 3. SNR has compensated CCFC beginning in December 2005 for reactive power costs within the deadband. This rate action will terminate these payments.

This rate action is consistent with a recent Commission order denying rehearing in Entergy Services, Inc., Docket No. EL05–149–001 (114 FERC ¶ 61,303). This order articulated the Commission's position that compensation for reactive power is based on comparability principles. The Commission emphasized that an interconnecting generator should not be compensated for reactive power when operating its generating facility within the specified deadband (+/−95 percent) since it is only meeting its reliability and interconnection obligations. The transmission owner would be violating the comparability standard only if it compensated its own generating units for providing reactive power and did not compensate the third-party generators. By excluding VAR Support from the TRR, no transmission customers, including third-party generators, are required to pay for VAR Support. Therefore, SNR does not plan to compensate third-party generators interconnected with its transmission system for VAR Support. This outcome is both consistent with Western's statutory duties and with the Commission's comparability standard. CCFC and/or other generators that are or may be interconnected with Western's transmission system will continue to recover their costs (real and reactive) as a bundled product or market-based rate as CCFC did prior to its comparability filing at the Commission.

Under the 2004 Power Marketing Plan, Base Resource and First Preference power is primarily CVP hydrogeneration available subject to water conditions and operating constraints. The Base Resource and First Preference power formula rates recover a PRR through an allocation of percentages of costs to First Preference and Base Resource Customers.

Component 1 of the PRR for Base Resource and First Preference Power, as approved in the rate schedule (CV–F11), includes operations and maintenance (O&M), purchased power for project use and First Preference Customer loads, interest expense, annual expenses (including any other statutorily required costs or charges), investment repayment for the CVP, and the Washoe Project annual PRR that remains after project use loads are met. Revenues from project use, transmission, ancillary services, and other services are applied to the total PRR and the remainder is collected from Base Resource and First Preference Customers.

The provisional rate formula change for CV–F12 for the Base Resource and First Preference PRR results in a .04 percent decrease when compared to the fiscal year (FY) 2006 PRR.

By Delegation Order No. 00–037.00, effective December 6, 2001, the Secretary of Energy delegated: (1) The authority to develop power and transmission rates to Western's Administrator, (2) the authority to confirm, approve, and place such rates into effect on an interim basis to the Deputy Secretary of Energy, and (3) the authority to confirm, approve, and place into effect on a final basis to remand or to disapprove such rates to the Commission. Existing DOE procedures for public participation in power rate adjustments (10 CFR part 903) were published on September 18, 1985.

Under Delegation Order Nos. 00–037.00 and 00–001.00B, and in compliance with 10 CFR part 903, and 18 CFR part 300, I hereby confirm, approve, and place Rate Order No. WAPA–128, the CVP power, and CVP, PACI, and COTP transmission service formula rates into effect on an interim basis. The new Rate Schedules CV–T2, CV–NWT4, PACI–T2, COTP–T2, and CV–F12 will be promptly submitted to the Commission for confirmation and approval on a final basis.

Dated: July 26, 2006.

Clay Sell,

Deputy Secretary.

Department of Energy, Deputy Secretary

In the matter of: Western Area Power Administration; Rate Adjustment for the Central Valley Project, the California Oregon Transmission Project, and the Pacific Alternating Current Intertie

[Rate Order No. WAPA–128]

Order Confirming, Approving, and Placing the Central Valley Project Power Rates, the Central Valley Project, the California-Oregon Transmission Project, and the Pacific Alternating Current Intertie Transmission Rates Into Effect on an Interim Basis

This rate was established in accordance with section 302 of the Department of Energy (DOE) Organization Act, (42 U.S.C. 7152). This Act transferred to and vested in the Secretary of Energy the power marketing functions of the Secretary of the U.S. Department of the Interior, Bureau of Reclamation (Reclamation) under the Reclamation Act of 1902 (ch. 1093, 32 Stat. 388), as amended and supplemented by subsequent laws, particularly section 9(c) of the Reclamation Project Act of 1939 (43 U.S.C. 485h(c)), and other Acts that specifically apply to the project involved.

By Delegation Order No. 00–037.00, effective December 6, 2001, the Secretary of Energy delegated: (1) The authority to develop power and transmission rates to Western's Administrator, (2) the authority to confirm, approve, and place such rates into effect on an interim basis to the Deputy Secretary of Energy, and (3) the authority to confirm, approve, and place into effect on a final basis to remand or to disapprove such rates to the Commission. Existing DOE procedures for public participation in power rate adjustments (10 CFR part 903) were published on September 18, 1985.

Acronyms and Definitions

As used in this Rate Order, the following acronyms and definitions apply:

2004 Power Marketing Plan: The 2004 CVP Power Marketing Plan (64 FR 34417) effective January 1, 2005.

Administrator: The Administrator of the Western Area Power Administration.

Ancillary Services: Those services necessary to support the transfer of electricity while maintaining reliable operation of the transmission provider's transmission system in

accordance with standard utility practice.

Base Resource: The Central Valley and Washoe Project power output and existing power purchase contracts extending beyond 2004 as determined by Western to be available for marketing after meeting the requirements of Project Use and First Preference Customers and any adjustments for maintenance, reserves, transformation losses, and certain ancillary services.

CCFC: Calpine Construction Finance Company.

COI: The California-Oregon Intertie—Consists of three 500-kilovolt lines linking California and Oregon, the California-Oregon Transmission Project, and the Pacific Alternating Current Intertie. The Western Electricity Coordinating Council establishes the seasonal transfer capability for the California-Oregon Intertie.

COI Rating Seasons: COI rating seasons are: summer, June through October; winter, November through March; and spring, April through May.

COTP: The California-Oregon Transmission Project—A 500-kilovolt transmission project in which Western has part ownership.

CVP: The Central Valley Project is a multipurpose Federal water development project extending from the Cascade Range in northern California to the plains along the Kern River south of Bakersfield, California.

Capacity: The electric capability of a generator, transformer, transmission circuit, or other equipment expressed in kilowatts.

Commission: The Federal Energy Regulatory Commission.

Component 1: Part of a formula rate which is used to recover the costs for a specific service or product.

Customer: An entity with a contract that receives service from Western's Sierra Nevada Customer Service Region.

Deficits: Unpaid or deferred annual expenses.

DOE: United States Department of Energy.

DOE Order RA 6120.2: A DOE order outlining power marketing administration financial reporting and ratemaking procedures.

FERC: The Commission (to be used when referencing Commission Orders).

First Preference: A Customer or entity qualified to use Preference power within a county of origin (Trinity, Calaveras, and Tuolumne) as specified under the Trinity River Division Act of August 12, 1955 (69 Stat. 719) and the Flood Control Act of 1962 (76 Stat. 1173, 1191–1192).

FRN: **Federal Register** notice.

FY: Fiscal Year—October 1 to September 30.

kV: Kilovolt—The electrical unit of measure of electric potential that equals 1,000 volts.

kW: Kilowatt—The electrical unit of capacity that equals 1,000 watts.

kWh: Kilowatthour—The electrical unit of energy that equals 1,000 watts in 1 hour.

Load: The amount of electric power or energy delivered or required at any specified point(s) on a transmission or distribution system.

Mill: A monetary denomination of the United States that equals one-tenth of a cent or one-thousandth of a dollar.

Mills/kWh: Mills per kilowatthour—The unit of charge for energy.

MW: Megawatt—The electrical unit of capacity that equals 1 million watts or 1,000 kilowatts.

NEPA: National Environmental Policy Act of 1969 (42 U.S.C. 4321, *et seq.*).

Net Revenue: Revenue remaining after paying all annual expenses.

NITS: Network Integrated Transmission Service.

Non-firm: A type of product and/or service not always available at the time requested by the customer.

O&M: Operation and Maintenance.

OATT: Open Access Transmission Tariff.

PACI: Pacific Alternating Current Intertie—A 500-kV transmission project of which Western owns a portion of the facilities.

Power: Capacity and Energy.

Preference: The provisions of Reclamation Law which require Western to first make Federal power available to certain non-profit entities.

Project Use: Power used to operate CVP facilities under Reclamation Law.

Provisional Rate: A rate which has been confirmed, approved, and placed into effect on an interim basis by the Deputy Secretary.

PRR: Power Revenue Requirement—The annual revenue that must be collected to recover annual expenses such as O&M, purchase power, transmission service expenses, interest, deferred expenses, and repay Federal investments and other assigned costs.

PRS: Power Repayment Study.

Rate Brochure: A document dated February 2006 explaining the rationale and background for the rate proposal contained in this Rate Order.

Reclamation: United States Department of the Interior, Bureau of Reclamation.

Reclamation Law: A series of Federal laws. Viewed as a whole, these laws create the originating framework under which Western markets power.

Revenue Requirement: The revenue required to recover annual expenses (such as O&M, purchase power, transmission service expenses, interest, deferred expenses) and repay Federal investments and other assigned costs.

SNR: The Sierra Nevada Customer Service Region of Western.

TRR: Transmission Revenue Requirement.

VAR Support: Reactive power and voltage control from the CVP and other non-Federal Generation Sources Service.

Washoe Project: A Reclamation project located in the Lahontan Basin in west-central Nevada and east-central California.

WECC: Western Electricity Coordinating Council.

Western: United States Department of Energy, Western Area Power Administration.

Effective Date

The new provisional rates will take effect on the first day of the first full billing period beginning on or after September 1, 2006, and will remain in effect until September 30, 2009, pending approval by the Commission on a final basis.

Public Notice and Comment

Western followed the Procedures for Public Participation in Power and Transmission Rate Adjustments and Extensions (10 CFR part 903) in developing these rates. The steps Western took to involve interested parties in the rate process were:

1. A **Federal Register** notice published on March 2, 2006 (71 FR 10666), announced the proposed change of the reactive power and voltage control revenue requirement component. This notice began the public consultation and comment period.

2. On March 2, 2006, Western e-mailed the **Federal Register** notice (71 FR 10666) to the SNR Preference Customers and interested parties explaining the fact that this was a minor rate adjustment. Therefore, there was no public information or comment forum for this rate process. Western also reiterated its availability to meet with interested parties to explain the rationale for the rate adjustment and to discuss the studies that support the proposal for the change to the revenue requirement.

3. On March 2, 2006, Western also mailed letters to the SNR Preference Customers and interested parties transmitting the Web site address to obtain a copy of the FRN and providing

instructions on how to receive a copy of the Rate Brochure.

4. Western communicated clarifying information on the proposed rate adjustment with the following Customers and/or interested parties. This information is included in the record.

Northern California Power Agency, California, Port of Oakland, California, Redding Electric Utility, California, Sacramento Municipal Utility District, California.

5. Western received three comment letters during the consultation and comment period, which ended on April 3, 2006. All formally submitted comments have been considered in preparing this Rate Order.

Comments: Written comments were received from the following organizations: Calpine Construction Finance Company, L.P., California. Redding Electric Utility, California. Sacramento Municipal Utility District, California.

Project Description

Initially authorized by Congress in 1935, the CVP is a large water and power system that covers about one-third of the state of California. Legislation set the purposes of the CVP in priority order as: (1) Improvement of navigation, (2) river regulation, (3) flood control, (4) irrigation, and (5) power. The CVP Improvement Act of 1992 added fish and wildlife mitigation as a priority above power and added fish and wildlife enhancement as a priority equal to power.

The CVP is within the Central Valley and Trinity River Basins of California. It includes 18 dams and reservoirs with a total storage capacity of 13 million acre-feet. The system includes 615 miles of canals, 7 pumping facilities, 11 powerplants with a maximum operating capability of about 2,074 MW, about 852 circuit-miles of high voltage transmission lines, 15 substations, and 16 communication sites. Reclamation operates the water control and delivery system and all of the powerplants except the San Luis Unit, which the state of California operates for Reclamation.

The Rivers and Harbors Act of 1937 authorized Reclamation to build the CVP, including Shasta and Keswick Dams on the Sacramento River. The initial authorization included powerplants at Shasta and Keswick Dams along with high-voltage transmission lines to transmit power from Shasta and Keswick Powerplants to the Tracy Pumping Plant and to integrate Federal hydropower into other electric systems.

Additional CVP facilities were authorized by Congress through a series of laws. The American River Division was authorized in 1944 and includes the Folsom Dam and Powerplant and the Nimbus Dam and Powerplant on the American River. The Trinity Dam and Powerplant, Judge Francis Carr Powerplant, and Whiskeytown Dam and Spring Creek Powerplant were authorized as part of the Trinity River Division in 1955 and allocated up to 25 percent of the resulting energy to Trinity County for use within Trinity County. The San Luis Unit, authorized in 1960, includes the B.F. Sisk San Luis Dam, San Luis Reservoir and William R. Gianelli Pump-Generating Plant, O'Neill Pump-Generating Plant, and Dos Amigos Pumping Plant. The Rivers and Harbors Act of 1962 authorized the New Melones Project and allocated up to 25 percent of the resulting energy to Calaveras and Tuolumne Counties for use within the counties.

Western's SNR markets the surplus hydropower generation of the CVP and Washoe Project. Between 1967 and 2004, under the terms of Contract 14–06–200–2948A (Contract 2948A) with the Pacific Gas and Electric Company (PG&E), CVP resources, along with other Western resources, were integrated with PG&E resources. PG&E served the combined PG&E/Western loads with the integrated resources. When PG&E informed Western that it planned to terminate Contract 2948A on December 31, 2004, Western began working with its Customers to develop and implement the 2004 Power Marketing Plan. The 2004 Power Marketing Plan was published in the **Federal Register** (64 FR 34417) on June 25, 1999. It established the criteria for marketing CVP and Washoe Project power output for 20 years beginning on January 1, 2005, and ending on December 31, 2024.

The Base Resource is a fundamental component and the primary power product marketed through the 2004 Power Marketing Plan. Under previous marketing plans, Preference Customers received a fixed capacity and load factor energy allocation. Under the 2004 Power Marketing Plan, Preference Customers (other than First Preference) receive an allocated percentage of the Base Resource. The Base Resource is defined as the CVP and Washoe Project power output and any existing power purchase contracts extending beyond 2004, determined by Western to be available for marketing after meeting the requirements of project use and First Preference Customers, and any adjustments for maintenance, reserves, transformation losses, and certain ancillary services. In 2000, each CVP Customer (other than First Preference Customers) signed a contract with Western that specifies how Base Resource power will be made available under the 2004 Power Marketing Plan.

Power generated from the CVP is first dedicated to project use. The remaining power is allocated to various Preference Customers in California. Types of Preference Customers include: (1) Irrigation and water districts, (2) public utility districts, (3) municipalities, (4) Federal agencies, (5) state agencies, (6) rural electric cooperatives, and (7) Native American tribes.

In 1964, Congress authorized construction of the 500-kV Pacific Northwest-Pacific Southwest Alternating Current Intertie. On July 31, 1967, Reclamation (Western's power marketing predecessor), PG&E, the Southern California Edison Company, and the San Diego Gas and Electric Company entered into Contract 14–06–200–2947A (Contract 2947A), an extra high-voltage transmission service and exchange agreement for the northern portion of the PACI. Western, the California Independent System Operator Corporation, and PG&E initiated a Transmission Exchange Agreement (Contract No. 04–SNR–00788–A) effective January 1, 2005, that provides Western with a 400–MW entitlement of transmission capacity on the PACI.

The COTP is a jointly owned 342-mile, 500-kV transmission line that connects the Captain Jack Substation in southern Oregon to Tracy/Tesla Substation in central California. Operational since March 1993, COTP provides a third high-voltage intertie between the Pacific Northwest and California. COTP owners other than Western are non-Federal participants.

Power Repayment Study

Western prepares a PRS each FY to determine if revenues will be sufficient to repay, within the required time, all costs assigned to the power function. Repayment criteria are based on law, applicable policies, including DOE Order RA 6120.2, and authorizing legislation.

Existing and Provisional Formula Rates and Revenue Requirement

Under the 2004 Power Marketing Plan, the PRR for First Preference and Base Resource power includes O&M, purchased power for project use and First Preference Customer loads, interest expense, annual expenses (including any other statutorily required costs or charges), investment repayment for the CVP, and the Washoe Project annual PRR that remains after project use loads are met. Revenues from project use,

transmission, ancillary services, and other services are applied to the total PRR, and the remainder is collected from Base Resource and First Preference Customers.

The Base Resource and First Preference power provisional formula rates recover a PRR through percentages for First Preference and Base Resource Customers. Base Resource Customer percentages were established through the public process for the 2004 Power Marketing Plan. The First Preference Customers' percentages to be used for billing purposes were developed as part of the rate process for the existing rates. A comparison of the power revenue requirement for existing and provisional formula rates follows:

COMPARISON OF POWER REVENUE REQUIREMENTS FOR EXISTING AND PROVISIONAL FORMULA RATES

	Existing rates (as of 4/1/06) ($000)	Provisional rates (effective 9/1/06) ($000)	Percent change
Rate Schedule	CV–F11	CV–F12	.....
Base Resource and First Preference PRR	$53,003	$52,983	−.04%

Certification of Rates

Western's Administrator certified that the provisional CVP power and CVP, PACI, and COTP transmission service formula rates are the lowest possible rates consistent with sound business principles. The provisional formula rates were developed following administrative policies and applicable laws.

PRR and CVP, PACI, and COTP Transmission Service Formula Rates Discussion

According to Reclamation Law, Western must establish rates sufficient to recover O&M, other annual and interest expenses, and repay power investment and irrigation aid.

Statement of Revenue and Related Expenses

This rate adjustment constitutes a minor rate adjustment in accordance with 10 CFR part 903 because it produces less than a 1 percent change in the annual revenues of the power system. The summary of projected revenue and expense data from the PRS, as well as the cost-of-service study that supported the existing rates and the rate design and rate methodology were approved when the existing rates were put into effect on November 18, 2004 (Rate Order No. WAPA–115, 69 FR 70510, December 6, 2004). The Commission confirmed and approved the rate schedules on October 11, 2005, under FERC Docket No. EF05–5011–000 (113 FERC 61,026).

Basis for Rate Development

This rate adjustment does not change the rate design or methodology of the existing rates. This rate adjustment removes the VAR Support revenue requirement from the TRRs associated with Component 1 of the CVP, PACI, and COTP transmission service. These provisional rates include the CVP VAR Support in Component 1 of the Base Resource and First Preference PRR.

Comments

The comments and responses regarding change of VAR Support revenue requirement component, paraphrased for brevity when not affecting the meaning of the statement(s), are discussed below. Direct quotes from comment letters are used for clarification where necessary.

A. *Comment:* A Customer supported Western's recommendation to remove all VAR Support costs from Western's TRR and recover CVP Western generator VAR Support costs from the PRR. The customer indicated that this action will ''allocate costs associated with CVP generation to the CVP power rate base, which is much more appropriate and consistent with cost causation than allocating these generator costs to the TRR.''

Response: Western appreciates the supportive comment.

B. *Comment:* A Customer supported Western's proposal to revise Component 1 of its TRR to exclude the costs associated with VAR Support. The Customer indicated that ''Western's proposal will ensure that VAR support costs from CVP generation are paid by those entities that are benefiting from the associated generation.''

Response: Western appreciates the supportive comment.

C. *Comment:* A Customer referenced an open FERC docket (114 FERC ¶ 61,303, issued March 23, 2006) regarding Entergy Services, Inc., and expressed concern over Western's intentions to transfer VAR Support costs from the TRR to the PRR; thereby, avoiding additional VAR Support costs from non-Federal generators. The Customer indicated that ''while there may be an argument that comparability would permit Western to ''zero out'' the VAR Support component of the TRR and not compensate either Federal or non-Federal generators, it is not comparable treatment to manipulate the rate structure to deprive non-affiliate (non-Federal) generators of compensation while assuring affiliate (Federal) generators of compensation.''

Response: Western understands that the Commission's policy for compensation is one of comparability. In Order No. 2003 (68 FR 49,845), the Commission emphasized that an interconnecting utility should not be compensated for providing reactive power within the established power factor range since it is only meeting its contractual obligation. Generators need only be compensated where they are directed to operate outside the deadband (68 FR 49891). In Order No. 2003A (69 FR 15,932), the Commission addressed comparability. It added that if a transmission provider pays its own or affiliated generator for reactive power within the established range, then it must also pay interconnected customers (69 FR 15935).

Western notes that in the Entergy Services, Inc. case cited above, Entergy Services, Inc., established a rate schedule for reactive power. Entergy included its revenue requirement for reactive power in the rate schedule. As part of the Commission proceeding, Entergy sought to zero out the Rate Schedule and thus Entergy maintained that it met the comparability requirements of Order No. 2003A, and the Commission agreed (114 FERC ¶ 61,303) (2006).

Western's rate actions are reviewed by the Commission under the provisions of 18 CFR part 300 and Delegation Order No. 00–037.00. Western strives to abide by Commission precedent, consistent with our mission and statutory authorities, and, as such, has voluntarily published an OATT and initiated this rate adjustment in an effort to maintain comparability. Like Entergy, Western is removing the costs from the TRR to meet the comparability test established by the Commission. By law, Western

must recover all of its costs. To meet its statutory obligations and remain consistent with Western's OATT, Western must recover its costs from either transmission users or power users. Western may not forgo recovery. As described above, the removal of the reactive power component is the option which is most consistent with Western's statutory duties. Based on Western's rate design all transmission customers are treated comparably since no transmission customer pays for reactive power within the deadband. In other words, all transmission customers, including Western and interconnected utilities, pay the same transmission rates. Given Western's position as a Federal agency, Western believes this is consistent with the Commission's position that compensation within the deadband is based solely on the comparability provision in Order No. 2003A (114 FERC ¶ 61,303, slip op 5–6) (2006).

Comment: A Customer expressed concern that Western is shifting a cost component that has traditionally been associated with transmission service to its power rate and believes that this shift ''obfuscates the costs associated with providing transmission service by allocating costs traditionally allocated in transmission rates to other rates.'' This Customer believes that Western's proposal ''did not meet the principle of comparability and is therefore discriminatory and inconsistent with Western's reciprocity obligations under its tariff.''

Response: Prior to FERC Order No. 888 (61 FR 21,540), Western traditionally bundled the costs for power, transmission, and ancillary services. Western did not maintain a separate rate component for an ancillary service such as reactive power. FERC Order No. 888 unbundled power, transmission, and ancillary services. After FERC Order No. 888, ancillary services were seen as a new commodity with a different pricing mechanism. Within the confines of Western's statutory requirements, Western voluntarily promulgated an OATT and unbundled some of its power, transmission, and ancillary services. When Western became aware of a possible non-comparability issue regarding compensation for reactive power, Western initiated this rate process to remedy that problem. Western was concerned that compensating non-Federal generators under its existing rates and requiring these same generators to pay for VAR Support in Western transmission service rates created duplicative charges and unequal treatment for Federal and non-Federal generators. Western rectified this situation with this rate process. As discussed above, Western's final decision is consistent with its statutory duties and with the comparability provisions of the Commission.

Availability of Information

Information about this rate adjustment, including power repayment studies, comments, letters, memorandums, and other supporting material made and kept by Western and used to develop the provisional rates, is available for public review in the Sierra Nevada Regional Office, Western Area Power Administration, 114 Parkshore Drive, Folsom, California.

Regulatory Procedure Requirements

Regulatory Flexibility Analysis

The Regulatory Flexibility Act of 1980 (5 U.S.C. 601, *et seq.*) requires Federal agencies to perform a regulatory flexibility analysis if a final rule is likely to have a significant economic impact on a substantial number of small entities and there is a legal requirement to issue a general notice of proposed rulemaking. Western has determined that this action does not require a regulatory flexibility analysis since it is a rulemaking of particular applicability involving rates or services applicable to public property.

Environmental Compliance

In compliance with the National Environmental Policy Act (NEPA) of 1969, 42 U.S.C. 4321, *et seq.*; the Council on Environmental Quality Regulations for implementing NEPA (40 CFR parts 1500–1508); and DOE NEPA Implementing Procedures and Guidelines (10 CFR part 1021), Western has determined that this action is categorically excluded from preparing an environmental assessment or an environmental impact statement.

Determination Under Executive Order 12866

Western has an exemption from centralized regulatory review under Executive Order 12866; accordingly, no clearance of this notice by the Office of Management and Budget is required.

Small Business Regulatory Enforcement Fairness Act

Western has determined that this rule is exempt from congressional notification requirements under 5 U.S.C. 801 because the action is a rulemaking of particular applicability relating to rates or services and involves matters of procedure.

Submission to the Federal Energy Regulatory Commission

The provisional rates herein confirmed, approved, and placed into effect, together with supporting documents, will be submitted to the Commission for confirmation and final approval.

Order

In view of the foregoing and under the authority delegated to me, I confirm and approve on an interim basis, effective September 1, 2006, Rate Schedules CV–F12, CV–T2, CV–NWT4, PACI–T2 and COTP–T2 for the Central Valley and the California-Oregon Transmission Projects and the Pacific Alternating Current Intertie of the Western Area Power Administration. The rate schedules shall remain in effect on an interim basis, pending the Commission's confirmation and approval of them or substitute rates on a final basis through September 30, 2009.

Dated: July 26, 2006.

Clay Sell,

Deputy Secretary.

Rate Schedule CV–F12 (Supersedes Schedule CV–F11)

Central Valley Project; Schedule of Rates for Base Resource and First Preference Power

Effective: September 1, 2006, through September 30, 2009.

Available: Within the marketing area served by the Sierra Nevada Customer Service Region.

Applicable: To the Base Resource (BR) and First Preference (FP) power Customers.

Character and Conditions of Service: Alternating current, 60 hertz, three-phase, delivered and metered at the voltages and points established by contract. This service includes the Central Valley Project (CVP) transmission (to include reactive supply and voltage control from Federal generation sources needed to support the transmission service), spinning, and non-spinning reserve services.

Power Revenue Requirement: Western will develop the Power Revenue Requirement (PRR) prior to the start of each fiscal year (FY). The PRR will be divided into two 6-month periods, October through March and April through September. A monthly PRR will be calculated by dividing each 6-month PRR by six. The PRR for the April through September period will be reviewed in March of each year. The review will analyze financial data from the October through February period, to the extent information is available, as

well as forecasted data for the March through September period. If there is a change of $5 million or more, the PRR for the April through September period will be recalculated.

First Preference Power Formula Rate:

Component 1:

$$\text{FP Customer Percentage} = \frac{\text{FP Customer Load}}{\text{Gen} + \text{Power Purchases} - \text{Project Use}}$$

FP Customer Charge = FP Customer Percentage × MRR.

Where:

FP Customer Load = An FP Customer's forecasted annual load in megawatthours (MWh).

Gen = The forecasted annual CVP and Washoe generation (MWh).

Power Purchases = Power purchases for project use and FP loads (MWh).

Project Use = The forecasted annual project use loads (MWh).

MRR = Monthly Power Revenue Requirement.

Western will develop the FP Customer percentage prior to the start of each FY. During March of each FY, each FP Customer's percentage will be reviewed. If, as a result of the review, there is a change in the FP Customer's percentage of more than one-half of 1 percent, the percentage will be revised for the April through September period.

The percentages in the table below are the maximum percentages for each FP Customer that will be applied to the MRR. The maximum percentages were determined based on a critically dry year where there are hydrologic conditions that result in low CVP generation and, consequently, low levels of BR. These maximum percentages are not used in instances where individual FP Customer percentages increase due to load growth. If these maximum percentages are used for determining the FP Customer's charges for more than 1 year, Western will evaluate their percentage from the formula rate versus the maximum percentage and make adjustments as appropriate.

FP CUSTOMERS' MAXIMUM PERCENTAGES

FP customers	Maximum FP customer's percentage applied to the MRR
Sierra Conservation Center	1.39
Calaveras Public Power Agency	3.49
Trinity Public Utility District	9.21
Tuolumne Public Power Agency	3.42
Total	17.51%

Below is a sample calculation for an FP Customer monthly charge for power.

FP CUSTOMER MONTHLY CHARGE SAMPLE CALCULATION

Example: First Preference Customer Charge Calculation	
FP Customer Load—MWh	10,000
Washoe generation—MWh	2,500
CVP generation—MWh	3,700,000
Project Use Load—MWh	1,200,000
Project Use purchase—MWh	47,000
FP Customer percentage	0.39%
MRR	$3,333,333
FP Customer monthly charge	$13,000

Component 2: Any charges or credits associated with the creation, termination, or modification to any tariff, contract, or schedule accepted or approved by the Federal Energy Regulatory Commission (Commission) or other regulatory body will be passed on to each appropriate Customer. The Commission or other regulatory body accepted or approved charges or credits apply to the service to which this rate methodology applies.

When possible, Western will pass through directly to the appropriate Customer, the Commission or other regulatory body accepted or approved charges or credits in the same manner Western is charged or credited. If the Commission or other regulatory body accepted or approved charges or credits cannot be passed through directly to the appropriate Customer, the charges or credits will be passed through using Component 1 of the FP power formula rate.

Component 3: Any charges or credits from the Host Control Area (HCA) applied to Western for providing this service will be passed through directly to the appropriate Customer in the same manner Western is charged or credited, to the extent possible. If the HCA costs or credits cannot be passed through to the appropriate Customer in the same manner Western is charged or credited, the charges or credits will be passed through using Component 1 of the FP power formula rate.

BR Formula Rate:

Component 1:

BR Customer Charges = (BR RR × BR %)

Where:

BR RR = BR Monthly Revenue Requirement

BR % = BR percentage for each Customer as indicated in the BR contract after adjustments for hourly exchange energy.

BR Customers will pay for exchange energy by adjusting the BR percentage that is applied to the BR RR. Adjustments to a Customer's BR percentage for seasonal exchanges will be reflected in the Customer's BR contract.

An illustration of the adjustment to a Customer's BR percentage for hourly Exchange Energy (EE) is shown in the table below.

EXAMPLE OF BASE RESOURCE PERCENTAGE ADJUSTMENTS FOR EXCHANGE ENERGY

BR customer	BR percentage from contract	Hourly BR = 30 MWh	Customer's BR in excess of load	Customers receiving EE	BR delivered (adjusting for EE)	Revised BR percentage
Customer A	20	6	3	0	3	10
Customer B	10	3	0	1	4	13.33
Customer C	70	21	0	2	23	76.67
Total 100	30	3	3	30	100	

After the FP Customers' share of the annual PRR has been determined, the remainder of the annual PRR is recovered from the BR Customers. The BR RR will be collected in two 6-month periods. For October through March, 25 percent of the BR RR will be collected. For April through September, 75 percent of the BR RR will be collected.

A BR RR is calculated by dividing the BR 6-month revenue requirement by six. The revenues from the sale of surplus BR will be applied to the annual BR RR for the following FY.

Component 2: Any charges or credits associated with the creation, termination, or modification to any tariff, contract, or schedule accepted or approved by the Commission or other regulatory body will be passed on to each appropriate Customer. The Commission or other regulatory body accepted or approved charges or credits apply to the service to which this rate methodology applies.

When possible, Western will pass through directly to the appropriate Customer, the Commission or other regulatory body accepted or approved charges or credits in the same manner Western is charged or credited. If the Commission or other regulatory body accepted or approved charges or credits cannot be passed through directly to the appropriate Customer, the charges or credits will be passed through using Component 1 of the BR formula rate.

Component 3: Any charges or credits from the HCA applied to Western for providing this service will be passed through directly to the appropriate Customer in the same manner Western is charged or credited, to the extent possible. If the HCA costs or credits cannot be passed through to the appropriate Customer in the same manner Western is charged or credited, the charges or credits will be passed through using Component 1 of the BR formula rate.

Billing: Billing for BR and FP power will occur monthly using the respective formula rate.

Adjustment for Losses: Losses will be accounted for under this rate schedule as stated in the service agreement.

Adjustment for Audit Adjustments: Financial audit adjustments that apply to the revenue requirement under this rate schedule will be evaluated on a case-by-case basis to determine the appropriate treatment for repayment and cash flow management.

Rate Schedule CV–T2 (Supersedes Schedule CV–T1)

Central Valley Project; Schedule of Rate for Transmission Service

Effective: September 1, 2006, through September 30, 2009.

Available: Within the marketing area served by the Sierra Nevada Customer Service Region.

Applicable: To Customers receiving Central Valley Project (CVP) firm and/or non-firm transmission service.

Character and Conditions of Service: Transmission service for three-phase, alternating current at 60 hertz, delivered and metered at the voltages and points of delivery or receipt, adjusted for losses, and delivered to points of delivery. This service includes scheduling and system control and dispatch service needed to support the transmission service.

Formula Rate: The formula rate for CVP firm and non-firm transmission service includes three components:

Component 1:

$$\frac{\text{CVP TRR}}{\text{TTc} + \text{NITSc}}$$

Where:

CVP TRR = Transmission Revenue Requirement is the costs associated with facilities that support the transfer capability of the CVP transmission system, excluding generation facilities and radial lines.

TTc = Total Transmission Capacity is the total transmission capacity under long-term contract between the Western Area Power Administration (Western) and other parties.

NITSc = Average 12-month coincident peaks of network integrated transmission service (NITS) Customers at the time of the monthly CVP transmission system peak. For rate design purposes, Western's use of the transmission system to meet its statutory obligations is treated as NITS.

Western will revise the rate from Component 1 based on either of the following two conditions: (a) Updated financial data available in March of each year and (b) a change in the numerator or denominator that results in a rate change of at least $0.05 per kilowattmonth. Rate change notifications will be posted on the Open Access Same-Time Information System.

Component 2: Any charges or credits associated with the creation, termination, or modification to any tariff, contract, or rate schedule accepted or approved by the Federal Energy Regulatory Commission (Commission) or other regulatory body will be passed on to each appropriate Customer. The Commission or other regulatory body accepted or approved charges or credits apply to the service to which this rate methodology applies. When possible, Western will pass through directly to the appropriate Customer, the Commission or other regulatory body accepted or approved charges or credits in the same manner Western is charged or credited. If the Commission or other regulatory body accepted or approved charges or credits cannot be passed through directly to the appropriate Customer in the same manner Western is charged or credited, the charges or credits will be passed through using Component 1 of the CVP transmission service formula rate.

Component 3: Any charges or credits from the Host Control Area (HCA) applied to Western for providing this service will be passed through directly to the appropriate Customer in the same manner Western is charged or credited, to the extent possible. If the HCA costs or credits cannot be passed through to the appropriate Customer in the same manner Western is charged or credited, the charges or credits will be passed through using Component 1 of the CVP transmission service formula rate.

Billing: The formula rate above applies to the maximum amount of capacity reserved for periods ranging from 1 hour to 1 month, payable whether used or not. Billing will occur monthly.

Adjustment for Losses: Losses incurred for service under this rate schedule will be accounted for as agreed to by the parties in accordance with the service agreement.

Adjustment for Audit Adjustments: Financial audit adjustments that apply to the revenue requirement under this rate schedule will be evaluated on a case-by-case basis to determine the appropriate treatment for repayment and cash flow management.

Rate Schedule CV–NWT4 (Supersedes Schedule CV–NWT3)

Central Valley Project; Schedule of Rate for Network Integration Transmission Service

Effective: September 1, 2006, through September 30, 2009.

Available: Within the marketing area served by the Sierra Nevada Customer Service Region.

Applicable: To Customers who receive Central Valley Project (CVP) Network Integration Transmission Service (NITS), to points of delivery and receipt as specified in the service agreement.

Character and Conditions of Service: Transmission service for three-phase, alternating current at 60 hertz, delivered

and metered at the voltages and points of delivery or receipt, adjusted for losses, and delivered to points of delivery. This service includes scheduling and system control and dispatch service needed to support the transmission service.

Formula Rate: The formula rate for CVP NITS includes three components:

Component 1:

NITS Customer's monthly demand charge = NITS Customer's load ratio share times one-twelfth (1/12) of the Annual Network TRR.

Where:

NITS Customer's load ratio share = The NITS Customer's hourly load (including behind the meter generation minus the NITS Customer's hourly Base Resource) coincident with the monthly CVP transmission system peak minus the coincident peak for all firm CVP (including reserved transmission capacity) transmission service, expressed as a ratio.

Annual Network TRR = Total CVP transmission revenue requirement, less revenues from long-term contracts for CVP transmission between the Western Area Power Administration (Western) and other parties.

The Annual Network TRR will be revised when the rate from Component 1 of the CVP transmission rate under Rate Schedule CV-T1 is revised.

Component 2: Any charges or credits associated with the creation, termination, or modification to any tariff, contract, or rate schedule accepted or approved by the Commission or other regulatory body will be passed on to each appropriate Customer. The Commission accepted or approved charges or credits apply to the service to which this rate methodology applies.

When possible, Western will pass through directly to the appropriate Customer, the Commission or other regulatory body accepted or approved charges or credits in the same manner Western is charged or credited. If the Commission or other regulatory body accepted or approved charges or credits cannot be passed through directly to the appropriate Customer in the same manner Western is charged or credited, the charges or credits will be passed through using Component 1 of the CVP NITS formula rate.

Component 3: Any charges or credits from the Host Control Area (HCA) applied to Western for providing this service will be passed through directly to the appropriate Customer in the same manner Western is charged or credited, to the extent possible. If the HCA charges or credits cannot be passed through to the appropriate Customer in the same manner Western is charged or credited, the charges or credits will be passed through using Component 1 of the CVP NITS formula rate.

Billing: NITS will be billed monthly under the formula rate.

Adjustment for Losses: Losses incurred for service under this rate schedule will be accounted for as agreed to by the parties in accordance with the service agreement.

Adjustment for Audit Adjustments: Financial audit adjustments that apply to the revenue requirement under this rate schedule will be evaluated on a case-by-case basis to determine the appropriate treatment for repayment and cash flow management.

Rate Schedule COTP–T2 (Supersedes Schedule COTP–T1)

California-Oregon Transmission Project; Schedule of Rate for Transmission Service

Effective: September 1, 2006, through September 30, 2009.

Available: Within the marketing area served by the Sierra Nevada Customer Service Region.

Applicable: To Customers receiving California-Oregon Transmission Project (COTP) firm and/or non-firm transmission service.

Character and Conditions of Service: Transmission service for three-phase, alternating current at 60 hertz, delivered and metered at the voltages and points of delivery or receipt, adjusted for losses, and delivered to points of delivery. This service includes scheduling and system control and dispatch service needed to support the transmission service.

Formula Rate: The formula rate for COTP firm and non-firm transmission service includes three components:

Component 1:

$$\frac{\text{COTP TRR}}{\text{Western's COTP Seasonal Capacity}}$$

Where:

COTP TRR = COTP Seasonal Transmission Revenue Requirement (the Western Area Power Administration's (Western) costs associated with facilities that support the transfer capability of the COTP).

Western's share of COTP Seasonal Capacity = Western's share of COTP capacity (subject to curtailment) under the then current California-Oregon Intertie (COI) transfer capability for the season. Seasonal definitions for summer, winter, and spring are June through October, November through March, and April through May, respectively.

Western will update the rate from Component 1 of the formula rate for COTP firm transmission service at least 15 days before the start of each COI rating season. Rate change notifications will be posted on the Open Access Same-Time Information System.

Component 2: Any charges or credits associated with the creation, termination, or modification to any tariff, contract, or rate schedule accepted or approved by the Federal Energy Regulatory Commission (Commission) or other regulatory body will be passed on to each appropriate Customer. The Commission accepted or approved charges or credits apply to the service to which this rate methodology applies.

When possible, Western will pass through directly to the appropriate Customer, the Commission or other regulatory body accepted or approved charges or credits in the same manner Western is charged or credited. If the Commission or other regulatory body accepted or approved charges or credits cannot be passed through directly to the appropriate Customer in the same manner Western is charged or credited, the charges or credits will be passed through using Component 1 of the COTP transmission service formula rate.

Component 3: Any charges or credits from the Host Control Area (HCA) applied to Western for providing this service will be passed through directly to the appropriate Customer in the same manner Western is charged or credited, to the extent possible. If the HCA charges or credits cannot be passed through to the appropriate Customer in the same manner Western is charged or credited, the charges or credits will be passed through using Component 1 of the COTP transmission service formula rate.

Billing: The formula rate above applies to the maximum amount of capacity reserved for periods ranging from 1 hour to 1 month, payable whether used or not. Billing will occur monthly.

Adjustment for Losses: Losses incurred for service under this rate schedule will be accounted for as agreed to by the parties in accordance with the service agreement.

Adjustment for Audit Adjustments: Financial audit adjustments that apply to the revenue requirement under this rate schedule will be evaluated on a case-by-case basis to determine the appropriate treatment for repayment and cash flow management.

Rate Schedule PACI–T2 (Supersedes Schedule PACI–T1)

Pacific Alternating Current Intertie Project; Schedule of Rate for Transmission Service

Effective: September 1, 2006, through September 30, 2009.

Available: Within the marketing area served by the Sierra Nevada Customer Service Region.

Applicable: To Customers receiving the Pacific Alternating Current Intertie (PACI) firm and/or non-firm transmission service.

Character and Conditions of Service: Transmission service for three-phase, alternating current at 60 hertz, delivered and metered at the voltages and points of delivery or receipt, adjusted for losses, and delivered to points of delivery. This service includes scheduling and system control and dispatch service needed to support the transmission service.

Formula Rate: The formula rate for PACI firm and non-firm transmission service includes three components:

Component 1:

$$\frac{\text{PACI TRR}}{\text{Western's PACI Seasonal Capacity}}$$

Where:

PACI TRR = PACI Seasonal Transmission Revenue Requirement, the Western Area Power Administration's (Western) costs associated with facilities that support the transfer capability of the PACI.

Western's PACI Seasonal Capacity = Western's share of PACI capacity (subject to curtailment) under the then current California-Oregon Intertie (COI) transfer capability for the season. Seasonal definitions for summer, winter, and spring are June through October, November through March, and April through May, respectively.

Western will update the rate from Component 1 of the formula rate for PACI firm transmission service at least 15 days before the start of each COI rating season. Rate change notifications will be posted on the Open Access Same-Time Information System.

Component 2: Any charges or credits associated with the creation, termination, or modification to any tariff, contract, or rate schedule accepted or approved by the Federal Energy Regulatory Commission (Commission) or other regulatory body will be passed on to each appropriate Customer. The Commission accepted or approved charges or credits apply to the service to which this rate methodology applies.

When possible, Western will pass through directly to the appropriate Customer, the Commission or other regulatory body accepted or approved charges or credits in the same manner Western is charged or credited. If the Commission or other regulatory body accepted or approved charges or credits cannot be passed through directly to the appropriate Customer in the same manner Western is charged or credited, the charges or credits will be passed through using Component 1 of the PACI transmission service formula rate.

Component 3: Any charges or credits from the Host Control Area (HCA) applied to Western for providing this service will be passed through directly to the appropriate Customer in the same manner Western is charged or credited, to the extent possible. If the HCA costs or credits cannot be passed through to the appropriate Customer, the charges or credits will be passed through using Component 1 of the PACI transmission service formula rate.

Billing: The formula rate above applies to the maximum amount of capacity reserved for periods ranging from 1 hour to 1 month, payable whether used or not. Billing will occur monthly.

Adjustment for Losses: Losses incurred for service under this rate schedule will be accounted for as agreed to by the parties in accordance with the service agreement.

Adjustment for Audit Adjustments: Financial audit adjustments that apply to the revenue requirement under this rate schedule will be evaluated on a case-by-case basis to determine the appropriate treatment for repayment and cash flow management.

[FR Doc. E6–13031 Filed 8–9–06; 8:45 am]

BILLING CODE 6450–01–P

ENVIRONMENTAL PROTECTION AGENCY

[FRL–8207–8]

Meeting of the Local Government Advisory Committee

AGENCY: Environmental Protection Agency (EPA).

ACTION: Notice.

SUMMARY: The Local Government Advisory Committee (LGAC) will meet on Thursday, September 14, 2006, by conference call from 1–3 eastern daylight time. *The conference call in number is (866) 299–3188 and the conference code, when prompted, is ''2025642791.''* The Committee will be discussing the agenda for the full LGAC meeting on October 31–November 2, 2006.

The Committee will hear comments from the public between 2:15–2:30 p.m. on the conference call. Each individual or organization wishing to address the LGAC meeting on the conference call will be allowed a maximum of five minutes to present their point of view. Please contact the Designated Federal Officer (DFO) at the number listed below to schedule agenda time. Time will be allotted on a first come, first serve basis, and the total period for comments may be extended, if the number of requests requires it.

This is an open meeting and all interested persons are invited to participate in the conference call. LGAC meeting minutes will be available after the meeting and can be obtained by an E-mail or written request to the DFO. Members of the public are requested to call the DFO at the number listed below if planning to participate.

DATES: The Local Government Advisory Committee will meet on September 14, 2006, by conference call from 1–3 eastern daylight time. The conference call in number is (866) 299–3188 and the conference code, when prompted, is ''2025642791.''

ADDRESSES: Additional information can be obtained by writing the DFO at 1200 Pennsylvania Avenue, NW., (1301A), Washington, DC 20460.

FOR FURTHER INFORMATION CONTACT: Contact Roy Simon, Designated Federal Officer for the Local Government Advisory Committee (LGAC) at (202) 564–3868, or by E-mail at *Simon.Roy@epa.gov.*

Information on Services for the Disability: For information on access or services for individuals with disability, or to request accommodation for a disability, please contact Roy Simon at (202) 564–3868. Please place requests at least 5 days prior to the meeting, to give EPA as much time as possible to process your request.

Dated: August 1, 2006.

Roy Simon,

Designated Federal Officer, Local Government Advisory Committee.

[FR Doc. E6–13034 Filed 8–9–06; 8:45 am]

BILLING CODE 6560–50–P

ENVIRONMENTAL PROTECTION AGENCY

[FRL–8207–7]

Tentative Approval and Solicitation of Request for a Public Hearing for Public Water Supply Supervision Program Revision for the Commonwealth of Puerto Rico

AGENCY: Environmental Protection Agency (EPA).

ACTION: Notice.

SUMMARY: Notice is hereby given that the Commonwealth of Puerto Rico is revising its approved Public Water Supervision Program. The EPA has determined that these revisions are no less stringent than the corresponding Federal regulations. Therefore, the EPA intends to approve these program revisions. All interested parties may request a public hearing.

DATES: This determination to approve the Commonwealth's primacy program revision application is made pursuant to 40 CFR 142.12(d)(3). It shall become final and effective unless (1) a timely and appropriate request for a public hearing is received or (2) the Regional Administrator elects to hold a public hearing on his own motion. Any interested person, other than Federal Agencies, may request a public hearing. A request for a public hearing must be submitted to the Regional Administrator at the address shown below by September 11, 2006. If a substantial request for a public hearing is made within the requested thirty day time frame, a public hearing will be held and a notice will be given in the **Federal Register** and a newspaper of general circulation. Frivolous or insubstantial requests for a hearing may be denied by the Regional Administrator. If no timely and appropriate request for a hearing is received and the Regional Administrator does not elect to hold a hearing on his own motion, this determination shall become final and effective September 11, 2006.

ADDRESSES: Any request for a public hearing shall include the following information: (1) Name, address and telephone number of the individual organization or other entity requesting a hearing; (2) a brief statement of the requesting person's interest in the Regional Administrator's determination and a brief statement on information that the requesting person intends to submit at such hearing; (3) the signature of the individual making the requests or, if the request is made on behalf of an organization or other entity, the signature of a responsible official of the organization or other entity. Requests for Public Hearing shall be addressed to: Regional Administrator, U.S. Environmental Protection Agency—Region 2, 290 Broadway, New York, New York 10007–1866.

All documents relating to this determination are available for inspection between the hours of 9 am and 4:30 pm, Monday through Friday, at the following offices:

Puerto Rico Department of Health, Public Water Supply Supervision Program, 9th Floor—Suite 903, Nacional Plaza Building, 431 Ponce De Leon Avenue, Hato Rey, Puerto Rico 00917.

US Environmental Protection Agency—Region 2, 24th Floor Drinking Water Section, 290 Broadway, New York, New York 10007–1866.

FOR FURTHER INFORMATION CONTACT: Michael J. Lowy, Drinking Water Section, U.S. Environmental Protection Agency—Region 2, (212) 637–3830.

SUPPLEMENTARY INFORMATION: Notice is hereby given that the United States Environmental Protection Agency has determined to approve an application by the Commonwealth of Puerto Rico to revise its Public Water Supply Supervision Primacy Program to incorporate regulations no less stringent than the EPA's National Primary Drinking Water Regulations (NPDWR) for the following: Three Consumer Confidence Rule Technical Corrections; promulgated by EPA as follows: May 4, 2000 (65 FR 25981), November 27, 2002 (67 FR 70850), December 9, 2002 (67 FR 73011), Arsenic and Contaminant Monitoring and New Source Requirements; Final Rule; promulgated by EPA January 22, 2001 (65 FR 38888), a minor clarification to the Arsenic Rule, promulgated by EPA March 25, 2003 (68 FR 14502), Revision/Technical Correction to the Interim Enhanced Surface Water Treatment Rule (IESWTR) and the Stage 1 Disinfectants and Disinfection Byproducts Rule (Stage 1 DBPR) and Revisions to State Primacy Requirements to Implement SDWA Amendments; promulgated by EPA February 12, 2001 (66 FR 9903), Filter Backwash Recycling Rule; Final Rule; promulgated by EPA June 8, 2001 (66 FR 31086), Long Term 1 Enhanced Surface Water Treatment Rule; Final Rule, promulgated by EPA on January 14, 2002 (67 FR 1812), Methods Update Final Rule; promulgated by EPA October 23, 2002 (67 FR 65220), Approval of Additional Methods for Coliforms and E. coli; promulgated by EPA February 13, 2004 (69 FR 7156), Technical Correction for Uranium; promulgated by EPA June 29, 2004 (69 FR 38850) and Analytical Method for Uranium; promulgated by EPA August 25, 2004 (69 FR 52176). The application demonstrates that Puerto Rico has adopted drinking water regulations which satisfy the NPDWRs for the above. The USEPA has determined that Puerto Rico's regulations are no less stringent than the corresponding Federal Regulations and that Puerto Rico continues to meet all requirements for primary enforcement responsibility as specified in 40 CFR 142.10.

(Authority: Section 1413 of the Safe Drinking Water Act, as amended, 40 U.S.C. 300g–2, and 40 CFR 142.10, 142.12(d) and 142.13)

Dated: July 12, 2006.

Alan J. Steinberg,

Regional Administrator, Region 2.

[FR Doc. E6–13032 Filed 8–9–06; 8:45 am]

BILLING CODE 6560–50–P

FEDERAL RESERVE SYSTEM

Formations of, Acquisitions by, and Mergers of Bank Holding Companies

The companies listed in this notice have applied to the Board for approval, pursuant to the Bank Holding Company Act of 1956 (12 U.S.C. 1841 *et seq.*) (BHC Act), Regulation Y (12 CFR Part 225), and all other applicable statutes and regulations to become a bank holding company and/or to acquire the assets or the ownership of, control of, or the power to vote shares of a bank or bank holding company and all of the banks and nonbanking companies owned by the bank holding company, including the companies listed below.

The applications listed below, as well as other related filings required by the Board, are available for immediate inspection at the Federal Reserve Bank indicated. The application also will be available for inspection at the offices of the Board of Governors. Interested persons may express their views in writing on the standards enumerated in the BHC Act (12 U.S.C. 1842(c)). If the proposal also involves the acquisition of a nonbanking company, the review also includes whether the acquisition of the nonbanking company complies with the standards in section 4 of the BHC Act (12 U.S.C. 1843). Unless otherwise noted, nonbanking activities will be conducted throughout the United States. Additional information on all bank holding companies may be obtained from the National Information Center Web site at *http://www.ffiec.gov/nic/*.

Unless otherwise noted, comments regarding each of these applications must be received at the Reserve Bank indicated or the offices of the Board of Governors not later than September 5, 2006.

A. Federal Reserve Bank of Boston (Richard Walker, Community Affairs Officer) P.O. Box 55882, Boston, Massachusetts 02106-2204:

1. Meridian Financial Services, Inc., and its wholly–owned subsidiary, Meridian Interstate Bancorp, Inc., both of East Boston, Massachusetts; to

acquire up to 40 percent of the voting shares of Hampshire First Bank, Manchester, New Hampshire (in formation).

B. Federal Reserve Bank of St. Louis (Glenda Wilson, Community Affairs Officer) 411 Locust Street, St. Louis, Missouri 63166-2034:

1. United Citizens Bancorp, Inc., Columbia, Kentucky; to become a bank holding company by acquiring 100 percent of the voting shares of United Citizens Bank of Southern Kentucky, Inc., Columbia, Kentucky.

C. Federal Reserve Bank of Kansas City (Donna J. Ward, Assistant Vice President) 925 Grand Avenue, Kansas City, Missouri 64198-0001:

1. First Liberty Capital Corporation Employee Stock Ownership Plan, Hugo, Colorado; to acquire an additional 1.59 percent, for a total of 31.39 percent, of the voting shares of First Liberty Capital Corporation, and thereby indirectly acquire voting shares of First National Bank of Hugo, both of Hugo, Colorado.

Board of Governors of the Federal Reserve System, August 4, 2006.

Jennifer J. Johnson,

Secretary of the Board.

[FR Doc. E6–13012 Filed 8–9–06; 8:45 am]

BILLING CODE 6210–01–S

FEDERAL RESERVE SYSTEM

Formations of, Acquisitions by, and Mergers of Bank Holding Companies

The companies listed in this notice have applied to the Board for approval, pursuant to the Bank Holding Company Act of 1956 (12 U.S.C. 1841 *et seq.*) (BHC Act), Regulation Y (12 CFR Part 225), and all other applicable statutes and regulations to become a bank holding company and/or to acquire the assets or the ownership of, control of, or the power to vote shares of a bank or bank holding company and all of the banks and nonbanking companies owned by the bank holding company, including the companies listed below.

The applications listed below, as well as other related filings required by the Board, are available for immediate inspection at the Federal Reserve Bank indicated. The application also will be available for inspection at the offices of the Board of Governors. Interested persons may express their views in writing on the standards enumerated in the BHC Act (12 U.S.C. 1842(c)). If the proposal also involves the acquisition of a nonbanking company, the review also includes whether the acquisition of the nonbanking company complies with the standards in section 4 of the BHC Act (12 U.S.C. 1843). Unless otherwise noted, nonbanking activities will be conducted throughout the United States. Additional information on all bank holding companies may be obtained from the National Information Center Web site at *http://www.ffiec.gov/nic/*.

Unless otherwise noted, comments regarding each of these applications must be received at the Reserve Bank indicated or the offices of the Board of Governors not later than September 5, 2006.

A. Federal Reserve Bank of Boston (Richard Walker, Community Affairs Officer) P.O. Box 55882, Boston, Massachusetts 02106-2204:

1. Meridian Financial Services, Inc., and its wholly–owned subsidiary, Meridian Interstate Bancorp, Inc., both of East Boston, Massachusetts; to acquire up to 40 percent of the voting shares of Hampshire First Bank, Manchester, New Hampshire (in formation).

B. Federal Reserve Bank of St. Louis (Glenda Wilson, Community Affairs Officer) 411 Locust Street, St. Louis, Missouri 63166-2034:

1. United Citizens Bancorp, Inc., Columbia, Kentucky; to become a bank holding company by acquiring 100 percent of the voting shares of United Citizens Bank of Southern Kentucky, Inc., Columbia, Kentucky.

C. Federal Reserve Bank of Kansas City (Donna J. Ward, Assistant Vice President) 925 Grand Avenue, Kansas City, Missouri 64198-0001:

1. First Liberty Capital Corporation Employee Stock Ownership Plan, Hugo, Colorado; to acquire an additional 1.59 percent, for a total of 31.39 percent, of the voting shares of First Liberty Capital Corporation, and thereby indirectly acquire voting shares of First National Bank of Hugo, both of Hugo, Colorado.

Board of Governors of the Federal Reserve System, August 4, 2006.

Jennifer J. Johnson,

Secretary of the Board.

[FR Doc. E6–13014 Filed 8–9–06; 8:45 am]

BILLING CODE 6210–01–S

FEDERAL RESERVE SYSTEM

Formations of, Acquisitions by, and Mergers of Bank Holding Companies

The companies listed in this notice have applied to the Board for approval, pursuant to the Bank Holding Company Act of 1956 (12 U.S.C. 1841 *et seq.*) (BHC Act), Regulation Y (12 CFR Part 225), and all other applicable statutes and regulations to become a bank holding company and/or to acquire the assets or the ownership of, control of, or the power to vote shares of a bank or bank holding company and all of the banks and nonbanking companies owned by the bank holding company, including the companies listed below.

The applications listed below, as well as other related filings required by the Board, are available for immediate inspection at the Federal Reserve Bank indicated. The application also will be available for inspection at the offices of the Board of Governors. Interested persons may express their views in writing on the standards enumerated in the BHC Act (12 U.S.C. 1842(c)). If the proposal also involves the acquisition of a nonbanking company, the review also includes whether the acquisition of the nonbanking company complies with the standards in section 4 of the BHC Act (12 U.S.C. 1843). Unless otherwise noted, nonbanking activities will be conducted throughout the United States. Additional information on all bank holding companies may be obtained from the National Information Center website at *www.ffiec.gov/nic/*.

Unless otherwise noted, comments regarding each of these applications must be received at the Reserve Bank indicated or the offices of the Board of Governors not later than September 5, 2006.

A. Federal Reserve Bank of Chicago (Patrick M. Wilder, Assistant Vice President) 230 South LaSalle Street, Chicago, Illinois 60690-1414:

1. Anita Bancorporation, Atlantic, Iowa; to acquire 100 percent of the voting shares of The First National Bank of Brewster, Brewster, Minnesota. Comments regarding this application must be received at the Reserve Bank indicated or the offices of the Board of Governors not later than August 21, 2006.

2. Ogden Bancshares, Inc., Ames, Iowa; to acquire 100 percent of the voting shares of Vision Bank (in organization), West Des Moines, Iowa.

B. Federal Reserve Bank of San Francisco (Tracy Basinger, Director, Regional and Community Bank Group) 101 Market Street, San Francisco, California 94105-1579:

1. Belvedere Capital Fund II L.P., and Belvedere Capital Partners II LLC, both of San Francisco, California; to acquire up to 15 percent of the voting shares of Promerica Bank (in organization), Los Angeles, California.

Board of Governors of the Federal Reserve System, August 7, 2006.

Robert deV. Frierson,

Deputy Secretary of the Board.

[FR Doc. E6–13026 Filed 8–9–06; 8:45 am]

BILLING CODE 6210–01–S

FEDERAL RESERVE SYSTEM

Notice of Proposals to Engage in Permissible Nonbanking Activities or to Acquire Companies that are Engaged in Permissible Nonbanking Activities

The companies listed in this notice have given notice under section 4 of the Bank Holding Company Act (12 U.S.C. 1843) (BHC Act) and Regulation Y (12 CFR Part 225) to engage *de novo*, or to acquire or control voting securities or assets of a company, including the companies listed below, that engages either directly or through a subsidiary or other company, in a nonbanking activity that is listed in § 225.28 of Regulation Y (12 CFR 225.28) or that the Board has determined by Order to be closely related to banking and permissible for bank holding companies. Unless otherwise noted, these activities will be conducted throughout the United States.

Each notice is available for inspection at the Federal Reserve Bank indicated. The notice also will be available for inspection at the offices of the Board of Governors. Interested persons may express their views in writing on the question whether the proposal complies with the standards of section 4 of the BHC Act. Additional information on all bank holding companies may be obtained from the National Information Center Web site at *hhtp://www.ffiec.gov/nic/*.

Unless otherwise noted, comments regarding the applications must be received at the Reserve Bank indicated or the offices of the Board of Governors not later than August 24, 2006.

A. Federal Reserve Bank of Chicago (Patrick M. Wilder, Assistant Vice President) 230 South LaSalle Street, Chicago, Illinois 60690-1414:

1. Bankers' Bancorp, Inc., Springfield, Illinois; to acquire 25 percent of the voting shares of 1st St. Louis Securities, St. Louis, Missouri, through it wholly–owned subsidiary, Independent Bankers' Bank, Springfield, Illinois, and thereby engage in securities brokerage, private placement services, and underwriting government obligations and money market instruments, pursuant to sections 225.28(b)(7)(i), (b)(7)(iii), and (b)(8)(i) of Regulation Y.

Board of Governors of the Federal Reserve System, August 4, 2006.

Jennifer J. Johnson,

Secretary of the Board.

[FR Doc. E6–13011 Filed 8–9–06; 8:45 am]

BILLING CODE 6210–01–S

FEDERAL RESERVE SYSTEM

Notice of Proposals to Engage in Permissible Nonbanking Activities or to Acquire Companies that are Engaged in Permissible Nonbanking Activities

The companies listed in this notice have given notice under section 4 of the Bank Holding Company Act (12 U.S.C. 1843) (BHC Act) and Regulation Y (12 CFR Part 225) to engage *de novo*, or to acquire or control voting securities or assets of a company, including the companies listed below, that engages either directly or through a subsidiary or other company, in a nonbanking activity that is listed in § 225.28 of Regulation Y (12 CFR 225.28) or that the Board has determined by Order to be closely related to banking and permissible for bank holding companies. Unless otherwise noted, these activities will be conducted throughout the United States.

Each notice is available for inspection at the Federal Reserve Bank indicated. The notice also will be available for inspection at the offices of the Board of Governors. Interested persons may express their views in writing on the question whether the proposal complies with the standards of section 4 of the BHC Act. Additional information on all bank holding companies may be obtained from the National Information Center Web site at *http://www.ffiec.gov/nic/*.

Unless otherwise noted, comments regarding the applications must be received at the Reserve Bank indicated or the offices of the Board of Governors not later than August 24, 2006.

A. Federal Reserve Bank of Chicago (Patrick M. Wilder, Assistant Vice President) 230 South LaSalle Street, Chicago, Illinois 60690-1414:

1. Bankers' Bancorp, Inc., Springfield, Illinois; to acquire 25 percent of the voting shares of 1st St. Louis Securities, St. Louis, Missouri, through it wholly–owned subsidiary, Independent Bankers' Bank, Springfield, Illinois, and thereby engage in securities brokerage, private placement services, and underwriting government obligations and money market instruments, pursuant to sections 225.28(b)(7)(i), (b)(7)(iii), and (b)(8)(i) of Regulation Y.

Board of Governors of the Federal Reserve System, August 4, 2006.

Jennifer J. Johnson,

Secretary of the Board.

[FR Doc. E6–13013 Filed 8–9–06; 8:45 am]

BILLING CODE 6210–01–S

DEPARTMENT OF HEALTH AND HUMAN SERVICES

Assistant Secretary for Planning & Evaluation; Medicaid Program; Meeting of the Medicaid Commission—September 6–7, 2006

AGENCY: Assistant Secretary for Planning & Evaluation (ASPE), HHS.

ACTION: Notice of meeting.

SUMMARY: This notice announces a public meeting of the Medicaid Commission. Notice of this meeting is given under the Federal Advisory Committee Act (5 U.S.C. App. 2, section 10(a)(1) and (a)(2)). The Medicaid Commission will advise the Secretary on ways to modernize the Medicaid program so that it can provide high-quality health care to its beneficiaries in a financially sustainable way. This notice also announces the release of one Commissioner from service on the Medicaid Commission and the appointment of one new individual to serve on the Medicaid Commission.

DATES: *The Meeting:* September 6–7, 2006. The meeting will begin at 9 a.m. on September 6 and 7.

Special Accommodations: Persons attending the meeting who are hearing or visually impaired, or have a condition that requires special assistance or accommodations, are asked to notify the Medicaid Commission by August 28th, 2006 (see **FOR FURTHER INFORMATION CONTACT**).

ADDRESSES: *The Meeting:* The meeting will be held at the following address: Doubletree Crystal City, 300 Army Navy Drive, Arlington, Virginia 22202, United States, telephone: (703) 416–4100, fax: (703) 416–4126.

Web site: You may access up-to-date information on the Medicaid Commission at *http://aspe.hhs.gov/medicaid/.*

FOR FURTHER INFORMATION CONTACT: Margaret Reiser, (202) 205–8255.

SUPPLEMENTARY INFORMATION: On May 24, 2005, we published a notice (70 FR 29765) announcing the Medicaid Commission and requesting nominations for individuals to serve on the Medicaid Commission. This notice announces a public meeting of the Medicaid Commission. This notice also announces the release of one

Commissioner from service on the Medicaid Commission and the appointment of one new individual to serve on the Medicaid Commission.

Medicaid Commission Member Released from Service: Donald Young.

New Medicaid Commission Voting Members: Jerry Regier.

Topics of the Meeting

The Commission will discuss options for making longer-term recommendations on the future of the Medicaid program that ensure long-term sustainability. Issues to be addressed may include, but are not limited to: Eligibility, benefit design, and delivery; expanding the number of people covered with quality care while recognizing budget constraints; long term care; quality of care, choice, and beneficiary satisfaction; and program administration.

Procedure and Agenda

This meeting is open to the public. There will be a public comment period at the meeting. The Commission may limit the number and duration of oral presentations to the time available. We will request that you declare at the meeting whether or not you have any financial involvement related to any services being discussed.

After the presentations and public comment period, the Commission will deliberate openly. Interested persons may observe the deliberations, but the Commission will not hear further comments during this time except at the request of the Chairperson.

Authority: 5 U.S.C. App. 2, section 10(a)(1) and (a)(2).

Dated: August 3, 2006.

Jerry Regier,

Principal Deputy/Assistant Secretary for Planning and Evaluation, Department of Health and Human Services.

[FR Doc. E6–13028 Filed 8–9–06; 8:45 am]

BILLING CODE 5150–05–P

DEPARTMENT OF HEALTH AND HUMAN SERVICES

Indian Health Service

Request for Public Comment: 30-Day Proposed Information Collection: Indian Health Service Forms To Implement the Privacy Rule (45 CFR Parts 160 & 164)

AGENCY: Indian Health Service, HHS.

ACTION: Notice.

SUMMARY: The Indian Health Service (IHS), as part of its continuing effort to reduce paperwork and respondent burden, conducts a pre-clearance consultation program to provide the general public and Federal agencies with an opportunity to comment on proposed and/or continuing collections of information in accordance with the Paperwork Reduction Act of 1995 (PRA95) (44 U.S.C. 3506(c)(2)(A)). This program helps to ensure that requested data can be provided in the desired format, reporting burden (time and financial resources) is minimized, collection instruments are clearly understood, and the impact of collection requirements on respondents can be properly assessed. As required by section 3507(a)(1)(D) of the Act, the proposed information collection has been submitted to the Office of Management and Budget (OMB) for review and approval.

The IHS received no comments in response to the 60-day **Federal Register** (71 FR 31195) published on June 1, 2006. The purpose of this notice is to allow an additional 30 days for public comment to be submitted directly to OMB.

Proposed Collection

Title: 0917–0030, ''Indian Health Service Forms to Implement the Privacy Rule (45 CFR parts 160 & 164)''.

Type of Information Collection Request: Extension, without revision, of currently approved information collection, 0917–0030. ''Indian Health Service Forms to Implement the Privacy Rule (45 CFR parts 160 & 164)''.

Form Number: IHS–810, IHS–912–1, IHS–912–2, IHS–913, and IHS–917.

Need and Use of Information Collection: This collection of information is made necessary by the Department of Health and Human Services Rule entitled ''Standards for Privacy of Individual Identifiable Health Information'' (''Privacy Rule'') (45 CFR parts 160 and 164). The Privacy Rule implements the privacy requirements of the Administrative Simplification subtitle of the Health Information Portability and Accountability Act of 1996 and creates national standards to protect individual's person health information and gives patients increased access to their medical records. 45 CFR 164.508, 522, 526 and 528 of the Rule require the collection of information to implement these protection standards and access requirements. The IHS will use the following data collection instruments to implement the information collection requirements contained in the Rule.

45 CFR 164.508: This provision requires covered entities to obtain or receive a valid authorization for its use or disclosure of protected health information for other than for treatment, payment and healthcare operations. Under the provision individuals may initiate a written authorization permitting covered entities to release their protected health information to entities of their choosing. The IHS–810 will be used to document an individual's authorization to use or disclose their protected health information.

45 CFR 164.522: Section 164.522(a)(1) requires a covered entity to permit individuals to request that the covered entity restrict the use and disclosure of their protected health information. The covered entity may or may not agree to the restriction. The form IHS–912–1 ''Request for Restriction(s)'' will be used to document an individual's request for restriction of their protected health information and whether IHS agreed or disagreed with the restriction. Section 164.522(a)(2)(1) permits a covered entity to terminate its agreement to a restriction if the individual agrees to or requests the termination in writing. The form IHS–912–2 ''Request for Revocation of Restriction(s)'' will be used to document the agency or individual request to terminate a formerly agreed to restriction regarding the use and disclosure of protected health information.

45 CFR 164.526: This provision requires covered entities to permit an individual to request that the covered entity amend protected health information. If the covered entity accepts the requested amendment, in whole or in part, the covered entity must inform the individual that the amendment is accepted and obtain the individual's identification of an agreement to have the covered entity notify the relevant persons with which the amendment needs to be shared. If the covered entity denies the requested amendment, in whole or in part, the covered entity must provide the individual with a written denial. The form IHS–917 ''Request for Correction/Amendment of Protected Health Information'' will be used to document an individual's request to amend their protected health information and the agency's decision to accept or deny the request.

45 CFR 164.528: This provision requires covered entities to permit an individual to request that the covered entity provide an accounting of disclosures of protected health information made by the covered entity. The form IHS–913 ''Request for an Accounting of Disclosures'' will be used to document an individual's request for an accounting of disclosures of their

protected health information and the agency's handling of the request.

Completed forms used in this collection of information are filed in the medical record.

Affected Public: Individuals and households.

Type of Respondents: Individuals.

Burden Hours: The table below provides the estimated burden hours for this information collection.

45 CFR section/IHS form	No. of respondents	Responses per respondent	Burden per responses (mins)*	Total annual burden
164.506, IHS–810	500,000	1	20	166,667
164.522(a)(1), IHS–912–1	15,000	1	10	2,500
164.522(a)(2), IHS–912–2	5,000	1	10	833
164.526, IHS–917	7,500	1	15	1,875
164,528, IHS–913	15,000	1	10	2,500
Total Annual Burden		5		174,375

* For ease of understanding, burden hours are provided in actual minutes.

The total estimated burden for this collection of information is 174,375 hours. There are no capital costs, operating costs and/or maintenance costs to respondents

Request For Comments: Your written comments and/or suggestions are invited on one or more of the following points: (a) Whether the information collection activity is necessary to carry out an agency function; (b) whether the agency processes the information collected in a useful and timely fashion; (c) the accuracy of public burden estimate (the estimated amount of time needed for individual respondents to provide the requested information); (c) whether the methodology and assumptions used to determine the estimate are logical; (e) ways to enhance the quality, utility, and clarity of the information being collected; and (f) ways to minimize the public burden through the use of automated, electronic, mechanical, or other technological collection techniques or other forms of information technology.

Direct Comments to OMB: Send your written comments and suggestions regarding the proposed information collection contained in this notice, especially regarding the estimated public burden and associated response time, directly to: Office of Management and Budget, Office of Regulatory Affairs, New Executive Office Building, Room 10235, Washington, DC, 20503, Attention: Allison Eydt, Desk Officer for IHS.

FOR FURTHER INFORMATION CONTACT: Send requests for more information on the proposed collection or to obtain a copy of the data collection instrument(s) and instructions to: Mrs. Christina Rouleau, IHS Reports Clearance Officer, 801 Thompson Avenue, TMP, Suite 450, Rockville, MD 20852–1601, call non-toll free (301) 443–5938, send via facsimile to (301) 443–2316, or send your e-mail requests, comments, and return address to: *crouleau@hqe.ihs.gov.*

Comment Due Date: Your comments regarding this information collection are best assured of having their full effect if received within 30-days of the date of this publication.

Dated: August 3, 2006.

Robert G. McSwain,

Deputy Director, Indian Health Service.

[FR Doc. 06–6813 Filed 3–9–06; 8:45 am]

BILLING CODE 4165–16–M

DEPARTMENT OF HEALTH AND HUMAN SERVICES

Office of Inspector General

Program Exclusions: July 2006

AGENCY: Office of Inspector General, HHS.

ACTION: Notice of program exclusions.

During the month of July 2006, the HHS Office of Inspector General imposed exclusions in the cases set forth below. When an exclusion is imposed, no program payment is made to anyone for any items or services (other than an emergency item or service not provided in a hospital emergency room) furnished, ordered or prescribed by an excluded party under the Medicare, Medicaid, and all Federal Health Care programs. In addition, no program payment is made to any business or facility, *e.g.*, a hospital, that submits bills for payment for items or services provided by an excluded party. Program beneficiaries remain free to decide for themselves whether they will continue to use the services of an excluded party even though no program payments will be made for items and services provided by that excluded party. The exclusions have national effect and also apply to all Executive Branch procurement and non-procurement programs and activities.

SUBJECT NAME	ADDRESS	EFFECTIVE DATE
PROGRAM-RELATED CONVICTIONS		
BABEL, KATHLEEN	ALDERSON, WV	8/20/2006.
BECK, KIMBERLY	ALDERSON, WV	8/20/2006.
BROOKLYN MEDICAL ARTS HIV CARE, PC	BROOKLYN, NY	8/20/2006.
BROOKS, RANDOLPH	HOUSTON, TX	8/20/2006.
BRYCE-AKERS, PATRICIA	CONVERSE, TX	8/20/2006.
CLEAR, ROBERT	FORT THOMAS, KY	8/20/2006.
DAMRON, JASON	QUINCY, KS	8/20/2006.
DAUS, ARTHUR	LOUISVILLE, KY	8/20/2006.
DELELLIS PROMOTIONS, INC	TARPON SPRINGS, FL	8/20/2006.

SUBJECT NAME	ADDRESS	EFFECTIVE DATE
DELELLIS, CHRISTINE	TARPON SPRINGS, FL	8/20/2006.
DIAZ-RIOS, PEDRO	HUMACAO, PR	8/20/2006.
ETUK, EDEM	ATLANTA, GA	8/20/2006.
ETUK, UKEME	FAIRBURN, GA	8/20/2006.
GAINES, ABDUL	BUFFALO, NY	8/20/2006.
HOLMES, MELODY	AUSTELL, GA	8/20/2006.
KNAPP, DIANNE	PINEVILLE, LA	8/20/2006.
LOPEZ, ISABEL	AUSTIN, TX	8/20/2006.
MOON, YOUNG	TALLAHASSEE, FL	8/20/2006.
NEILSEN, SANDRA	GRANTS PASS, OR	8/20/2006.
NOBLE, MARK	MANCHESTER, KY	8/20/2006.
ORTENZIO, LOUIS	SALEM, WV	8/20/2006.
REED, PATRICIA	NASHVILLE, TN	8/20/2006.
ROSS, ANTHONY	MILLINGTON, TN	8/20/2006.
SMITH, RHONDA	FORT WORTH, TX	8/20/2006.
STAPLES, MELESSA	MIDWEST CITY, OK	8/20/2006.
VOGELSANG, SCOTT	LOMPOC, CA	8/20/2006.
WALKER, LARRY	LITTLE ROCK, AR	8/20/2006.
WALLACE, DONNA	MORONGO VALLEY, CA	8/20/2006.
WINDER, SARAH	NACOGDOCHES, TX	8/20/2006.
WRIGHT, MARCELLA	STANTON, KY	8/20/2006.
YANCEY, GEORGE	FRESNO, CA	8/20/2006.
FELONY CONVICTION FOR HEALTH CARE FRAUD		
DELAVERGNE, JAMES	YELM, WA	8/20/2006.
DOUGHTY, DEBORAH	BILLERICA, MA	8/20/2006.
EVERS, LANCE	MILILANI, HI	8/20/2006.
FLYNN, MADGE	FAYETTEVILLE, NY	8/20/2006.
GLASS, HAROLD	JACKSONVILLE, FL	8/20/2006.
GRAHAM, QUEEN	RIVERVIEW, FL	8/20/2006.
HERNDON, RICHIE	RICHARDSON, TX	8/20/2006.
LEBLANC, VALERIE	SANFORD, ME	8/20/2006.
MARTIN-SZYMANSKI, MISTY	FAYETTEVILLE, AR	8/20/2006.
MCKNIGHT-MAYNARD, JOY	VIRGINIA BEACH, VA	8/20/2006.
MOORE, LEE	MCALESTER, OK	8/20/2006.
OULDS, KAREN	OKLAHOMA CITY, OK	8/20/2006.
PHIEFFER, MICHAEL	DAVENPORT, FL	8/20/2006.
PINEDA, ELVIRA	HONOLULU, HI	8/20/2006.
SMITH, ROBERT	DEVENS, MA	8/20/2006.
SOWLES, CHARLENE	GOODYEAR, AZ	8/20/2006.
STEPHEN, EARL	DORCHESTER, MA	8/20/2006.
STRICKLAND, GREG	SNEADS, FL	8/20/2006.
WILLIAMS, VINETTIA	MILVILLE, NJ	8/20/2006.
WILLIAMSON, LORENE	PEMBROKE PINES, FL	8/20/2006.
FELONY CONTROLLED SUBSTANCE CONVICTION		
AKERMAN, AMANDA	WOODWARD, OK	8/20/2006.
BRODIS, RUTH	PLANTATION, FL	8/20/2006.
COURTNEY, CHERYL	MILTON, FL	8/20/2006.
DAYLEY, RUTH	ALEDO, TX	8/20/2006.
HELTON, GARY	PIKEVILLE, TN	8/20/2006.
HYMAN, DEBORAH	FLEMINGTON, NJ	8/20/2006.
JONES, MARY	GLENROSE, TX	8/20/2006.
KRUG, BRENDA	PADUCAH, KY	8/20/2006.
LAWHON, VANISHA	BRYAN, TX	8/20/2006.
LIEBERMAN, IRA	GRAND BLANC, MI	8/20/2006.
PALMER, ADRINA	PRYOR, OK	8/20/2006.
ROSS, ALDOLFERUS	LAUDERHILL, FL	8/20/2006.
SCHULTZ, JOYCE	WHITE OAK, TX	8/20/2006.
STUDER, LISA	YANTIS, TX	8/20/2006.
PATIENT ABUSE/NEGLECT CONVICTIONS		
ACOVERA, MOIME	SAN DIEGO, CA	8/20/2006.
CARRINGTON, KRISTY	MORRISTOWN, TN	8/20/2006.
CONGLETON, KIMBERLY	IRVINE, KY	8/20/2006.
CRAWFORD, KENNETH	PHILLIPSBURG, NJ	8/20/2006.
ERVIN, THOMAS	CHOCTAW, OK	8/20/2006.
GROWER, SHERRY	SOMERSWORTH, NH	8/20/2006.
GUPTA, SUSHIL	HAMDEN, CT	8/20/2006.
IMPSON, HARRY	OKLAHOMA CITY, OK	8/20/2006.

SUBJECT NAME	ADDRESS	EFFECTIVE DATE
JACKSON, HERBERT	MARIANNA, FL	8/20/2006.
JUNIOUS, ROOSEVELT	ROCHESTER, NY	8/20/2006.
KILBURN, LISA	IRVINE, KY	8/20/2006.
LAMPE, ALEXY	HASKELL, TX	8/20/2006.
LOVE, CHRISTOPER	HOT SPRINGS, AR	8/20/2006.
MCCOY, BONITA	CONWAY, AR	8/20/2006.
PHILPOTT, JAMES	GOLDEN, CO	8/20/2006.
RAMIREZ, DORENE	ALTUS, OK	8/20/2006.
REED, SHAMIRA	COLUMBUS, MS	8/20/2006.
SIMMONS, JESSIE	ROCHESTER, NY	8/20/2006.
SIMON, ARNOLD	SAN DIEGO, CA	8/20/2006.
CONVICTION FOR HEALTH CARE FRAUD		
LUND, LAURA	FT COLLINS, CO	8/20/2006.
LICENSE REVOCATION/SUSPENSION/SURRENDER		
ARMASHI, A HUSSAM	WEEKI WACHEE, FL	8/20/2006.
ARTERBERRY, LISA	BAKERSFIELD, CA	8/20/2006.
ASHFORD, DENNIS	S DAYTONA, FL	8/20/2006.
AVILES, DAVID	ROY, WA	8/20/2006.
BACON, MELISSA	GUILFORD, VT	8/20/2006.
BARIEXCA, CARLA	BAYVILLE, NJ	8/20/2006.
BARNES, JANA	HILLSBORO, OR	8/20/2006.
BATTLES, STACIE	ANSON, ME	8/20/2006.
BELL, ROSANNE	ST PETERSBURG, FL	8/20/2006.
BERNAS, TOMAS	SUGAR LAND, TX	8/20/2006.
BLANTON, BARBARA	LONDON, KY	8/20/2006.
BOLIN, LORI	BOYNTON BEACH, FL	8/20/2006.
BRAUCHLER, LAUREN	LONGMONT, CO	8/20/2006.
BRISSARD, SUSAN	MATHIS, TX	8/20/2006.
BURGE, DEBRA	POLARVILLE, MS	8/20/2006.
BURNS, DANA	GRAND CANE, LA	8/20/2006.
BUTTERWORTH, JAMES	AUBURNDALE, FL	8/20/2006.
CALLAHAN, SUSAN	MANSFIELD, OH	8/20/2006.
CARLIN, ANN	SCRANTON, PA	8/20/2006.
CAVANAUGH, SUZANNE	WEST BROOKFIELD, MA	8/20/2006.
CAWTHON, CAROLYN	GRAND PRAIRIE, TX	8/20/2006.
CHERRY, JAMES	PFAFFTOWN, NC	8/20/2006.
COOK, SYBIL	WARD, AR	8/20/2006.
COX, SUSAN	KUTTAWA, KY	8/20/2006.
CRIPE, DEBORAH	TEMPLE, TX	8/20/2006.
CURTIS, AUTUMN	TACOMA, WA	8/20/2006.
DEVORE, LISA	EVERETT, WA	8/20/2006.
DIAS, JOSE	NEW BEDFORD, MA	8/20/2006.
DOYON, RAEANN	GORHAM, ME	8/20/2006.
DRUG ASSIST HEALTH SOLUTIONS, INC	OAKLAND, FL	8/20/2006.
DUNNAM, LORI	COSBY, TN	8/20/2006.
FISHER, BEVERLY	VAN BUREN, AR	8/20/2006.
FOWLER, BOBBY	LAVALETTE, WV	8/20/2006.
FRANKLIN, AYANNA	HOUSTON, TX	8/20/2006.
GENNARO, PHILLIP	ELIZABETH, PA	8/20/2006.
GIBSON, BETH	ELVERSON, PA	8/20/2006.
HALCOMB, PAMELA	BULAN, KY	8/20/2006.
HARRIS, JULIE	VACAVILLE, CA	8/20/2006.
HEWITT, MARY	GAINESVILLE, FL	8/20/2006.
HIGHTOWER, VIRGINIA	FT MYERS, FL	8/20/2006.
HOGAN, ANSA	SUGAR LAND, TX	8/20/2006.
HOLUB, PHILIP	LOUISVILLE, KY	8/20/2006.
HUTT, JANICE	NORWICH, VT	8/20/2006.
JAKUBOWSKI, SUSAN	SARVER, PA	8/20/2006.
JODELKA, ERIK	OAKHURST, NJ	8/20/2006.
KELLY, JOHN	SMETHPORT, PA	8/20/2006.
KLING, WESLEY	CRAWFORDVILLE, FL	8/20/2006.
KNEMOLLER, ROBERT	TOMS RIVER, NJ	8/20/2006.
KNOWLES, LINDA	LAYTON, UT	8/20/2006.
KOLASINSKI, JOLDIE	TOLLESON, AZ	8/20/2006.
KREITEL, JEANETTE	RENNER, SD	8/20/2006.
KUPSICK, JACKIE	TAHLEQUAH, OK	8/20/2006.
LAND, CHASSIE	DUNLAP, TN	8/20/2006.
LANHAM, JOHN	LOUISVILLE, KY	8/20/2006.
LANIER, TANYA	CLARENDON, NC	8/20/2006.

SUBJECT NAME	ADDRESS	EFFECTIVE DATE
LAPRISE, ELIZABETH	JONESTOWN, PA	8/20/2006.
LENNON, JESSICA	RUTLAND, ME	8/20/2006.
LEWIS, BRENDOLYN	HIGHLAND SPRINGS, VA	8/20/2006.
LOWERY, CURTIS	PITTSBURGH, PA	8/20/2006.
LYONS, JENNIFER	BLUFF CITY, TN	8/20/2006.
MAIATO, VICTORIA	JOHNSTON, RI	8/20/2006.
MARES, DANIEL	DENVER, CO	8/20/2006.
MARILES, MONICA	GLENDALE, AZ	8/20/2006.
MARION, DONALD	WAYLAND, MA	8/20/2006.
MARQUEZ, CHRISTINE	PHOENIX, AZ	8/20/2006.
MASARONE, JOSEPH	SPRINGFIELD, MA	8/20/2006.
MASCHKE, DAVID	WOODBRIDGE, VA	8/20/2006.
MASSE, KATHLEEN	LYNN, MA	8/20/2006.
MCCOY, ELCYE	PHOENIX, AZ	8/20/2006.
MERRIGAN, MARCIA	PITTSFIELD, MA	8/20/2006.
MOIR, MARK	LAKE HELEN, FL	8/20/2006.
MORGAN, ROBERT	ADEL, GA	8/20/2006.
NEAL, MARY	NICHOLASVILLE, KY	8/20/2006.
NISIVOCCIA, CHARLES	LITTLE FALLS, NJ	8/20/2006.
OSTROWSKI, PINKIE	TUCSON, AZ	8/20/2006.
PAHILAN, ABE	MILLINOCKET, ME	8/20/2006.
PASATIEMPO, ABNER	BALTIMORE, MD	8/20/2006.
PINKERMAN, KIMBERLY	ELON COLLEGE, NC	8/20/2006.
PLEMMONS, KRISTY	LEICESTER, NC	8/20/2006.
QUINN, LANNA	MOUND HOUSE, NV	8/20/2006.
RABINOWITZ, DAVID	FAYETTEVILLE, NY	8/20/2006.
RENBERG, JONATHAN	LAVERGNE, TN	8/20/2006.
RENDON, LUIS	TUCSON, AZ	8/20/2006.
ROBINSON, CINDY	LAWRENCEBURG, KY	8/20/2006.
ROBINSON-FRANCIS, NANCY	BROCKTON, MA	8/20/2006.
RODRIGUEZ, RUBEN	PHOENIX, AZ	8/20/2006.
RUBINSTEIN, CHARLES	LINWOOD, NJ	8/20/2006.
RUIZ, MARIA	PAHRUMP, NV	8/20/2006.
SABOURIN, PETER	PROVIDENCE, RI	8/20/2006.
SAGALA, TERRI	EVERETT, WA	8/20/2006.
SAYEGH, DONNA	PORTSMOUTH, VA	8/20/2006.
SCHROEDER, CATHERINE	CORAL SPRINGS, FL	8/20/2006.
SHIELDS, FELICIA	PEORIA, AZ	8/20/2006.
SPEIER, SUSANA	RANCHO MARGARITA, CA	8/20/2006.
ST LOUIS, NICHOLAS	BETHEL, ME	8/20/2006.
SWEENEY, SHAWN	SPOKANE, WA	8/20/2006.
THIEMSUWAN, CHINDA	LA PALMA, CA	8/20/2006.
THORNE, THERESA	MAUMELLE, AR	8/20/2006.
THRAILKILL, PATRICIA	PHOENIX, AZ	8/20/2006.
TRAYNOR, MARILYN	TUCSON, AZ	8/20/2006.
TREMBLAY, SARAH	ISLINGTON, MA	8/20/2006.
VAN PELT, JOHN	ELLSWORTH, ME	8/20/2006.
VANVALKINBURG, TASHA	MARSHFIELD, VT	8/20/2006.
VARNEY, JACK	BAGDAD, FL	8/20/2006.
WEAVER, SHERRY	LEXINGTON, KY	8/20/2006.
WEISS, JORDAN	COSTA MESA, CA	8/20/2006.
WELLS, SHARON	LAS VEGAS, NV	8/20/2006.
WHITNEY, MARIS	LAKE HIAWATHA, NJ	8/20/2006.
WILLIAMS, ELSWORTH	POMONA, CA	8/20/2006.
WOODS, CAREN	TUCSON, AZ	8/20/2006.
FEDERAL/STATE EXCLUSION/SUSPENSION		
ANDUJAR, EDWARD	SAN DIEGO, CA	8/20/2006.
NICHOLSON, BEVERLY	E ORANGE, NJ	8/20/2006.
FRAUD/KICKBACKS/PROHIBITED ACTS/SETTLEMENT AGREEMENTS		
CATES, JACK	SPRINGFIELD, MO	11/14/2005.
GROUP II MEDICAL SUPPORTS, LLC	BEAVER, WV	5/12/2006.
LEIGH, RICHARD	GRAND FORKS, ND	5/3/2006.
MEDICENTER DIABETIC SUPPLY, INC	BOULDER, CO	11/14/2005.
PREMIUM HEALTH GROUP, INC	MIRAMAR, FL	1/27/2006.
OWNED/CONTROLLED BY EXCLUDED/CONVICTED INDIVIDUAL		
AUGUSTA FOOT CENTER	AUGUSTA, GA	8/20/2006.
COMMUNITY CHIROPRACTIC	LOS GATOS, CA	8/20/2006.

SUBJECT NAME	ADDRESS	EFFECTIVE DATE
FRANK M STRASEK, DPM, INC	ROCKY RIVER, OH	8/20/2006.
ISLAND CHIROPRACTIC	ALAMEDA, CA	8/20/2006.
ROBERT T MORGAN, MD, PC	ADEL, GA	8/20/2006.
SE TEXAS SCHOOL HEALTH & RELATED SERVICES	BEAUMONT, TX	8/20/2006.
TUCKER PEDIATRICS, P C	TUCKER, GA	8/20/2006.

Dated: August 2, 2006.

Maureen R. Byer,

Director, Exclusions Staff, Office of Inspector General.

[FR Doc. E6–13019 Filed 8–9–06; 8:45 am]

BILLING CODE 4152–01–P

DEPARTMENT OF HEALTH AND HUMAN SERVICES

National Institutes of Health

National Cancer Institute; Notice of Closed Meetings

Pursuant to section 10(d) of the Federal Advisory Committee Act, as amended (5 U.S.C. Appendix 2), notice is hereby given of the following meetings.

The meetings will be closed to the public in accordance with the provisions set forth in sections 552b(c)(4) and 552b(c)(6), Title 5 U.S.C., as amended. The grant applications and the discussions could disclose confidential trade secrets or commercial property such as patentable material, and personal information concerning individuals associated with the grant applications, the disclosure of which would constitute a clearly unwarranted invasion of personal privacy.

Name of Committee: National Cancer Institute Initial Review Group Subcommittee G—Education.

Date: September 25–26, 2006.

Time: 8 a.m. to 5 p.m.

Agenda: To review and evaluate grant applications.

Place: Double Tree Rockville, 1750 Rockville Pike, Rockville, MD 20852.

Contact Person: Sonya Robertson, Ph.D, Scientific Review Administrator, Resources and Training Review Branch, Division of Extramural Activities, National Cancer Institute, 6116 Executive Blvd., Room 8109, Bethesda, MD 20892, 301–594–1182, *robersos@mail.nih.gov.*

Name of Committee: National Cancer Institute Special Emphasis Panel Cellular and Molecular Biology Special Emphasis Panel.

Date: September 27–29, 2006.

Time: 5 p.m. to 2 p.m.

Agenda: To review and evaluate grant applications.

Place: Hyatt Regency Bethesda, One Bethesda Metro Center, 7400 Wisconsin Avenue, Bethesda, MD 20814.

Contact Person: Shakeel Ahmad, Ph.D, Scientific Review Administrator, Research Programs Review Branch, National Cancer Institute, Division of Extramural Activities, 6116 Executive Blvd., Room 8137, MSC 8328, Bethesda, MD 20892, 301–594–0114, *ahmads@mail.nih.gov.*

(Catalogue of Federal Domestic Assistance Program Nos. 93.392, Cancer Construction; 93.393, Cancer Cause and Prevention Research; 93.394, Cancer Detection and Diagnosis Research; 93.395, Cancer Treatment Research; 93.396, Cancer Biology Research; 93.397, Cancer Centers Support; 93.398, Cancer Research Manpower; 93.399, Cancer Control, National Institutes of Health, HHS.)

Dated: August 1, 2006.

Anna Snouffer,

Acting Director, Office of Federal Advisory Committee Policy.

[FR Doc. 06–6828 Filed 8–9–06; 8:45 am]

BILLING CODE 4140–01–M

DEPARTMENT OF HEALTH AND HUMAN SERVICES

National Institutes of Health

National Center for Research Resources; Notice of Meeting

Pursuant to section 10(d) of the Federal Advisory Committee Act, as amended (5 U.S.C. Appendix 2), notice is hereby given of a meeting of the National Advisory Research Resources Council.

The meeting will be open to the public as indicated below, with attendance limited to space available. Individuals who plan to attend and need special assistance, such as sign language interpretation or other reasonable accommodations, should notify the Contact Person listed below in advance of the meeting.

The meeting will be closed to the public in accordance with the provisions set forth in section 552b(c)(4) and 552b(c)(6), Title 5 U.S.C., as amended. The grant applications and/or contact proposals and the discussions could disclose confidential trade secrets or commercial property such as patentable material, and personal information concerning individuals associated with the grant applications and/or contract proposals, the disclosure of which would constitute a clearly unwarranted invasion of personal privacy.

Name of Committee: National Advisory Research Resources Council.

Date: September 21, 2006.

Open: 8 a.m. to 1 p.m.

Agenda: Report of the Director, NCRR, and other business of the Council.

Place: National Institutes of Health, Building 31, 31 Center Drive, Conference Room 6, Bethesda, MD 20892.

Closed: 1 p.m. to 4 p.m.

Agenda: To review and evaluate grant applications and/or proposals.

Place: National Institutes of Health, Building 31, 31 Center Drive, Conference Room 6, Bethesda, MD 20892.

Contact Person: Louise E. Ramm, PhD, Deputy Director, National Center for Research Resources, National Institutes of Health, Building 31, 31 Center Drive, Room 3B11, Bethesda, MD 20892, 301–496–6023.

Any member of the public interested in presenting oral comments to the committee may notify the Contact Person listed on this notice at least 10 days in advance of the meeting. Interested individuals and representatives of organizations may submit a letter of intent, a brief description of the organization represented, and a short description of the oral presentation. Only one representative of an organization may be allowed to present oral comments and if accepted by the committee, presentations may be limited to five minutes. Both printed and electronic copies are requested for the record. In addition, any interested person may file written comments with the committee by forwarding their statements to the Contact Person listed on this notice. The statement should include the name, address, telephone number and when applicable, the business or professional affiliation of the interested person.

In the interest of security, NIH has instituted stringent procedures for entrance onto the NIH campus. All visitor vehicles, including taxicabs, hotel, and airport shuttles will be inspected before being allowed on campus. Visitors will be asked to show one form of identification (for example, a government-issued photo ID, driver's license, or passport) and to state the purpose of their visit.

Information is also available on the Institute's/Center's home page: *http://www.ncrr.gov/newspub/minutes.htm*, where an agenda and any additional information for the meeting will be posted when available.

(Catalogue of Federal Domestic Assistance Program Nos. 93.306, Comparative Medicine; 93.333, Clinical Research; 93.371, Biomedical Technology; 93.389, Research Infrastructure, 93.306, 83.333, National Institutes of Health, HHS.)

Dated: August 3, 2006.

Anna Snouffer,

Acting Director, Office of Federal Advisory Committee Policy.

[FR Doc. 06–6823 Filed 8–9–06; 8:45 am]

BILLING CODE 4140–01–M

DEPARTMENT OF HEALTH AND HUMAN SERVCIES

National Institutes of Health

National Center on Minority Health and Health Disparities; Notice of Closed Meeting

Pursuant to section 10(d) of the Federal Advisory Committee Act, as amended (5 U.S.C. Appendix 2), notice is hereby given of the following meeting.

The meeting will be closed to the public in accordance with the provisions set forth in sections 552b(c)(4) and 552b(c)(6), Title 5 U.S.C., as amended. The grant applications and the discussions could disclose confidential trade secrets or commercial property such as patentable material, and personal information concerning individuals associated with the grant applications, the disclosure of which would constitute a clearly unwarranted invasion of personal privacy.

Name of Committee: National Center on Minority Health and Health Disparities Special Emphasis Panel R13 Conference Grant.

Date: August 4, 2006.

Time: 2 p.m. to 3 p.m.

Agenda: To review and evaluate grant applications.

Place: National Institutes of Health, Two Democracy Plaza, 6707 Democracy Boulevard, Bethesda, MD 20892, (Telephone Conference Call).

Contact Person: Merlyn M. Rodrigues, PhD, MD, Director, Office of Extramural Activities, National Center On Minority Health, and Health Disparities, National Institutes of Health, 6707 Democracy Blvd. Suite 800, Bethesda, MD 20894, (301) 402–1366, *rodrigm1@mail.nih.gov.*

This notice is being published less than 15 days prior to the meeting due to the timing limitations imposed by the review and funding cycle.

Dated: July 27, 2006.

Anna Snouffer,

Acting Director, Office of Federal Advisory Committee Policy.

[FR Doc. 06–6832 Filed 8–9–06; 8:45 am]

BILLING CODE 4140–01–M

DEPARTMENT OF HEALTH AND HUMAN SERVICES

National Institutes of Health

National Institute of Allergy and Infectious Diseases; Notice of Meeting

Pursuant to section 10(a) of the Federal Advisory Committee Act, as amended (5 U.S.C. Appendix 2), notice is hereby given of a meeting of the AIDS Research Advisory Committee, NIAID.

The meeting will be open to the public, with attendance limited to space available. Individuals who plan to attend and need special assistance, such as sign language interpretation or other reasonable accommodations, should notify the Contact Person listed below in advance of the meeting.

Name of Committee: AIDS Research Advisory Committee, NIAID.

Date: September 18, 2006.

Time: 1 p.m. to 5 p.m.

Agenda: Report from the Division director and other staff.

Place: National Institutes of Health, Natcher Building, 45 Center Drive, Conference Rooms E1/E2, Bethesda, MD 20892.

Contact Person: Rona L. Siskind, Executive Secretary, AIDS Research Advisory Committee, Division of AIDS, NIAID/NIH, 6700B Rockledge Drive, Room 4139, Bethesda, MD 20892–7601, 301–435–3732.

Any member of the public interested in presenting oral comments to the committee may notify the Contact Person listed on this notice at least 10 days in advance of the meeting. Interested individuals and representatives of organizations may submit a letter of intent, a brief description of the organization represented, and a short description of the oral presentation. Only one representative of an organization may be allowed to present oral comments and if accepted by the committee, presentations may be limited to five minutes. Both printed and electronic copies are requested for the record. In addition, any interested person may file written comments with the committee forwarding their statement to the Contact Person listed on this notice. The statement should include the name, address, telephone number and when applicable, the business or professional affiliation of the interested person.

In the interest of security, NIH has instituted stringent procedures for entrance onto the NIH campus. All visitor vehicles, including taxicabs, hotel, and airport shuttles will be inspected before being allowed on campus. Visitors will be asked to show one form of identification (for a example, a government-issued photo ID, driver's license, or passport) and to state the purpose of their visit.

(Catalogue of Federal Domestic Assistance Program Nos. 93.855, Allergy, Immunology, and Transplantation Research; 93.856, Microbiology and Infectious Diseases Research, National Institutes of Health, HHS)

Dated: August 4, 2006.

Anna Snouffer,

Acting Director, Office of Federal Advisory Committee Policy.

[FR Doc. 06–6821 Filed 8–9–06; 8:45am]

BILLING CODE 4140–01–M

DEPARTMENT OF HEALTH AND HUMAN SERVICES

National Institutes of Health

National Institute of Biomedical Imaging and Bioengineering; Notice of Closed Meeting

Pursuant to section 10(d) of the Federal Advisory Committee Act, as amended (5 U.S.C. Appendix 2), notice is hereby given of the following meeting.

The meeting will be closed to the public in accordance with the provisions set forth in sections 552b(c)(4) and 552b(c)(6), Title 5 U.S.C., as amended. The grant applications and the discussions could disclose confidential trade secrets or commercial property such as patentable material, and personal information concerning individuals associated with the grant applications, the disclosure of which would constitute a clearly unwarranted invasion of personal privacy.

Name of Committee: National Institute of Biomedical Imaging and Bioengineering Special Emphasis Panel; ZEB1 OSR–A (O2) S—Conference Grants.

Date: August 18, 2006.

Time: 12 p.m. to 2 p.m.

Agenda: To review and evaluate grant applications.

Place: National Institutes of Health/NIBIB, Democracy II, 6707 Democracy Blvd., Bethesda, MD 20892.

Contact Person: David George, PhD, Director, Office of Scientific Review, National Institute of Biomedical Imaging and Bioengineering, 6707 Democracy Blvd., Suite 920, Bethesda, MD 20892, 301–496–8633, *georged1@mail.nih.gov.*

This notice is being published less than 15 days prior to the meeting due to the timing limitations imposed by the review and funding cycle.

Dated: August 1, 2006.

Anna Snouffer,

Acting Director, Office of Federal Advisory Committee Policy.

[FR Doc. 06–6824 Filed 8–9–06; 8:45 am]

BILLING CODE 4140–01–M

DEPARTMENT OF HEALTH AND HUMAN SERVICES

National Institutes of Health

National Institute on Alcohol Abuse and Alcoholism; Notice of Closed Meeting

Pursuant to section 10(d) of the Federal Advisory Committee Act, as amended (5 U.S.C. Appendix 2), notice is hereby given of the following meeting.

The meeting will be closed to the public in accordance with the provisions set forth in sections 552b(c)(4) and 552b(c)(6), Title 5 U.S.C., as amended. The grant applications and the discussions could disclose confidential trade secrets or commercial property such as patentable material, and personal information concerning individuals associated with the grant applications, the disclosure of which would constitute a clearly unwarranted invasion of personal privacy.

Name of Committee: National Institute on Alcohol Abuse and Alcoholism Special Emphasis Panel; DD–75 HEMBY—(1R01AA016703–01).

Date: August 28, 2006.

Time: 2 p.m. to 4 p.m.

Agenda: To review and evaluate grant applications.

Place: National Institutes of Health, 5635 Fishers Lane, Bethesda, MD 20892, (Telephone Conference Call).

Contact Person: Sathasiva B. Kandasamy, PhD, Scientific Review Administrator, Extramural Project Review Branch, Office of Scientific Affairs, National Institute on Alcohol Abuse and Alcoholism, Bethesda, MD 20892–9304, (301) 443–2926, *skandasa@mail.nih.gov.*

This notice is being published less than 15 days prior to the meeting due to the timing limitations imposed by the review and funding cycle.

(Catalogue of Federal Domestic Assistance Program Nos. 93.271, Alcohol Research Career Development Awards for Scientists and Clinicians; 93.272, Alcohol National Research Service Awards for Research Training; 93.273, Alcohol Research Programs; 93.891, Alcohol Research Center Grants, National Institutes of Health, HHS)

Dated: August 1, 2006.

Anna Snouffer,

Acting Director, Office of Federal Advisory Committee Policy.

[FR Doc. 06–6827 Filed 8–9–06; 8:45 am]

BILLING CODE 4140–01–M

DEPARTMENT OF HEALTH AND HUMAN SERVICES

National institutes of Health

National Institute of Allergy and Infectious Diseases; Notice of Closed Meeting

Pursuant to section 10(d) of the Federal Advisory Committee Act, as amended (5 U.S.C. Appendix 2), notice is hereby given of the following meeting.

The meeting will be closed to the public in accordance with the provisions set forth in sections 552b(c)(4) and 552b(c)(6), Title 5 U.S.C., as amended. The grant applications and the discussions could disclose confidential trade secrets or commercial property such as patentable material, and personal information concerning individuals associated with the grant applications, the disclosure of which would constitute a clearly unwarranted invasion of personal privacy.

Name of Committee: National Institute of Allergy and Infectious Diseases Special Emphasis Panel Resource for Identifying Immune Cell Networks.

Date: August 17, 2006.

Time: 3 p.m. to 4 p.m.

Agenda: To review and evaluate grant applications.

Place: National Institutes of Health, Rockledge 6700, 6700B Rockledge Drive, Room 3131, Bethesda, MD 20817, (Telephone Conference Call).

Contact Person: Katherine L. White, PhD, Scientific Review Administrator, Scientific Review Program, Division of Extramural Activities, National Institutes of Health/NIAID, 6700B Rockledge Drive, MSC 7616, Bethesda, MD 20892, 301–435–1615, *kw174b@nih.gov.*

This notice is being published less than 15 days prior to the meeting due to the timing limitations imposed by the review and funding cycle.

(Catalogue of Federal Domestic Assistance Program Nos. 93.855, Allergy, Immunology, and Transplantation Research; 93.856, Microbiology and Infectious Diseases Research, National Institutes of Health, HHS.)

Dated: July 28, 2006.

Anna Snouffer,

Acting Director, Office of Federal Advisory Committee Policy.

[FR Doc. 06–6829 Filed 8–9–05; 8:45 am]

BILLING CODE 4140–01–M

DEPARTMENT OF HEALTH AND HUMAN SERVICES

National Institutes of Health

National Institute of Child Health and Human Development; Notice of Closed Meeting

Pursuant to section 10(d) of the Federal Advisory Committee Act, as amended (5 U.S.C. Appendix 2), notice is hereby given of a meeting of the National Advisory Child Health and Human Development Council.

The meeting will be closed to the public in accordance with the provisions set forth in sections 552b(c)(4) and 552b(c)(6), Title 5 U.S.C., as amended. The intramural programs and projects and the discussions could disclose confidential trade secrets or commercial property such as patentable material, and personal information concerning individuals associated with the intramural programs and projects, the disclosure of which would constitute a clearly unwarranted invasion of personal privacy.

Name of Committee: National Advisory Child Health and Human Development Council NACHHD Subcommittee on Planning and Policy.

Date: August 31, 2006.

Time: 10:30 a.m. to 12 p.m.

Agenda: To review and evaluate the Division of Intramural Research site visit reports.

Place: National Institutes of Health, Building 31, 31 Center Drive, Room 2A03, Bethesda, MD 20892, (Telephone Conference Call).

Contact Person: Margaret Ames, PhD, Deputy Director for Science Policy, Analysis, and Communication, NICHD/NIH/DHHS, 31 Center Drive, Suite 2A–18, Bethesda, MD 20892, 301–496–0588.

(Catalogue of Federal Domestic Assistance Program Nos. 93.864, Population Research; 93.865, Research for Mothers and Children; 93.929, Center for Medical Rehabilitation Research; 93.209, Contraception and Infertility Loan Repayment Program, National Institutes of Health, HHS)

Dated: July 27, 2006.

Anna Snouffer,

Acting Director, Office of Federal Advisory Committee Policy.

[FR Doc. 06–6830 Filed 8–9–06; 8:45 am]

BILLING CODE 4140–01–M

DEPARTMENT OF HEALTH AND HUMAN SERVICES

National Institutes of Health

National Institute of Child Health and Human Development; Notice of Closed Meeting

Pursuant to section 10(d) of the Federal Advisory Committee Act, as amended (5 U.S.C. Appendix 2), notice is hereby given of the following meeting.

The meeting will be closed to the public in accordance with the provisions set forth in sections 552b(c)(4) and 552b(c)(6), Title 5 U.S.C., as amended. The grant applications and the discussions could disclose confidential trade secrets or commercial property such as patentable material, and personal information concerning individuals associated with the grant applications, the disclosure of which would constitute a clearly unwarranted invasion of personal privacy.

Name of Committee: National Institute of Child Health and Human Development Special Emphasis Panel Augmenting Language Therapy for Aphasia Recovery: a Multi-Site Clinical Trial.

Date: August 21, 2006.

Time: 10 a.m. to 12 p.m.

Agenda: To review and evaluate grant applications.

Place: National Institutes of Health, 6100 Executive Boulevard, Room 5B01, Rockville, MD 20852.(Telephone Conference Call).

Contact Person: Anne Krey, Scientific Review Administrator, Division of Scientific Review, National Institute of Child Health, and Human Development, National Institutes of Health, Bethesda, MD 20892, 301–435–6908.

(Catalogue of Federal Domestic Assistance Program Nos. 93.864, Population Research; 93.865, Research for Mothers and Children; 93.929, Center for Medical Rehabilitation Research; 93.209, Contraception and Infertility Loan Repayment Program, National Institutes of Health, HHS.)

Dated: July 27, 2006.

Anna Snouffer,

Acting Director, Office of Federal Advisory Committee Policy.

[FR Doc. 06–6831 Filed 8–9–06; 8:45 am]

BILLING CODE 4140–01–M

DEPARTMENT OF HEALTH AND HUMAN SERVICES

National Institutes of Health

National Institute of General Medical Sciences; Notice of Closed Meeting

Pursuant to section 10(d) of the Federal Advisory Committee Act, as amended (5 U.S.C. Appendix 2), notice is hereby given of the following meeting.

The meeting will be closed to the public in accordance with the provisions set forth in sections 552b(c)(4) and 552b(c)(6), Title 5 U.S.C., as amended. The grant applications and the discussions could disclose confidential trade secrets or commercial property such as patentable material, and personal information concerning individuals associated with the grant applications, the disclosure of which would constitute a clearly unwarranted invasion of personal privacy.

Name of Committee: National Institute of General Medical Sciences Special Emphasis Panel NIH Pathway to Independence Award.

Date: August 24–25, 2006.

Time: 8 a.m. to 4 p.m.

Agenda: To review and evaluate grant applications.

Place: Hyatt Regency Bethesda, One Bethesda Metro Center, 7400 Wisconsin Avenue, Bethesda, MD 20814.

Contact Person: Meredith D. Temple-O'Connor, PhD, Office of Scientific Review, National Institute of General Medical Sciences, National Institutes of Health, 45 Center Drive, Room 3AN12C, Bethesda, MD 20892, 301–594–2772, *templeocm@mail.nih.gov.*

(Catalogue of Federal Domestic Assistance Program Nos. 93.375, Minority Biomedical Research Support; 93.821, Cell Biology and Biophysics Research; 93.859, Pharmacology, Physiology, and Biological Chemistry Research; 93.862, Genetics and Developmental Biology Research; 93.88, Minority Access to Research Careers; 93.96, Special Minority Initiatives, National Institutes of Health, HHS)

Dated: July 31, 2006.

Anna Snouffer,

Acting Director, Office of Federal Advisory Committee Policy.

[FR Doc. 06–6833 Filed 8–9–06; 8:45 am]

BILLING CODE 4140–01–M

DEPARTMENT OF HEALTH AND HUMAN SERVICES

National Institutes of Health

National Institutes of Mental Health; Notice of Meeting

Pursuant to section 10(d) of the Federal Advisory Committee Act, as amended (5 U.S.C. Appendix 2), notice is hereby given of a meeting of the National Advisory Mental Health Council.

The meeting will be open to the public as indicated below, with attendance limited to space available. Individuals who plan to attend and need special assistance, such as sign language interpretation or other reasonable accommodations, should notify the Contact Person listed below in advance of the meeting.

This meeting will be closed to the public in accordance with the provisions set forth in sections 552b(c)(4) and 552b(c)(6), Title 5 U.S.C., as amended. The grant applications and the discussions could disclose confidential trade secrets or commercial property such as patentable material, and personal information concerning individuals associated with the grant applications, the disclosure of which would constitute a clearly unwarranted invasion of personal privacy.

Name of Committee: National Advisory Mental Health Council.

Date: September 14–15, 2006.

Closed: September 14, 2006, 10:30 a.m. to 3:30 p.m.

Agenda: To review and evaluate grant applications.

Place: National Institutes of Health, Neuroscience Center, 6001 Executive Boulevard, Conference Room C/D/E Rockville, MD 20852.

Open: September 14, 2006, 4 p.m. to 5 p.m.

Agenda: Discussion of NIMH program and policy issues.

Place: National Institutes of Health, Neuroscience Center, 6001 Executive Boulevard, Conference Room C/D/E, Rockville, MD 20852.

Open: September 15, 2006, 8:30 a.m. to 1 p.m.

Agenda: Presentation of Director's report and discussion of NIMH program and policy issues.

Place: National Institutes of Health, Building 31C, 31 Center Drive, 6th Floor, Conference Room 6, Bethesda, MD 20892.

Contact Person: Jane A. Steinberg, PhD. Director. Division of Extramural Activities. National Institutes of Mental Health, NIH, Neuroscience Center, 6001 Executive Blvd., Room 6154, MSC 9609, Bethesda, MD 20892–9609, 301–443–5047.

Any member of the public interested in presenting oral comments to the committee may notify the Contact Person listed on this notice at least 10 days in advance of the meetings. Interested individuals and representatives of organizations may submit a letter of intent, a brief description of the organization represented, and a short description of the oral presentation. Only one representative of an organization may be allowed to present oral comments and if accepted by the committee, presentations may be limited to five minutes. Both printed and electronic copies are requested for the record. In addition, any interested person may file written comments with the committee by forwarding their statement to the Contact Person listed on this notice. The statement should include the name, address, telephone number and when applicable, the business or professional affiliation of the interested person.

In the interest of security, NIH has instituted stringent procedures for entrance onto the NIH campus. All visitor vehicles, including taxicabs, hotel, and airport shuttles will be inspected before being allowed on campus. Visitors will be asked to show one form of identification (for example, a government-issued photo ID, driver's license, or passport) and to state the purpose of their visit.

Information is also available on the Institute's/Center home page: *http://www.nimh.nh.gov/council/advis.cfm*, where an agenda and any additional information for the meeting will be posted when available.

Catalogue of Federal Domestic Assistance Program Nos. 93.242, Mental Health Research Grants; 93.281, Scientist Development Award, Scientist Development Award for Clincians, and Research Scientist Award; 93.282, Mental Health National Research Service Awards for Research Training, National Institutes of Health, HHS)

Dated: August 2, 2006.

Anna Snouffer,

Acting Director, Office of Federal Advisory Committee Policy.

[FR Doc. 06–6834 Filed 8–9–06; 8:45 am]

BILLING CODE 4140–01–M

DEPARTMENT OF HEALTH AND HUMAN SERVICES

National Institutes of Health

National Institute of Child Health and Human Development; Notice of Closed Meeting

Pursuant to section 10(d) of the Federal Advisory Committee Act, as amended (5 U.S.C. Appendix 2), notice is hereby given of the following meeting.

The meeting will be closed to the public in accordance with the provisions set forth in sections 552b(c)(4) and 552b(c)(6), Title 5 U.S.C., as amended. The grant applications and the discussions could disclose confidential trade secrets or commercial property such as patentable material, and personal information concerning individuals associated with the grant applications, the disclosure of which would constitute a clearly unwarranted invasion of personal privacy.

Name of Committee: National Institute of Child Health and Human Development Special Emphasis Panel Function of Toll-Like Receptors Throughout Gestation.

Date: August 8, 2006.

Time: 12 p.m. to 3:30 p.m.

Agenda: To review and evaluate grant applications.

Place: National Institutes of Health, 6100 Executive Boulevard, Room 5B01, Rockville, MD 20852, (Telephone Conference Call).

Contact Person: Gopal M. Bhatnagar, PhD, Scientific Review Administrator, National Institute of Child Health, and Human Development, National Institutes of Health, 6100 Bldg Rm 5B01, Rockville, MD 20852 (301) 435–6889 *bhatnagg@mail.nih.gov.*

This notice is being published less than 15 days prior to the meeting due to the timing limitations imposed by the review and funding cycle.

(Catalogue of Federal Domestic Assistance Program Nos. 93.864, Population Research; 93.865, Research for Mothers and Children; 93.929, Center for Medical Rehabilitation Research; 93.209, Contraception and Infertility Loan Repayment Program, National Institutes of Health, HHS)

Dated: July 27, 2006.

Anna Snouffer,

Acting Director, Office of Federal Advisory Committee Policy.

[FR Doc. 06–6835 Filed 8–9–06; 8:45 am]

BILLING CODE 4140–01–M

DEPARTMENT OF HEALTH AND HUMAN SERVICES

National Institutes of Health

National Institute on Alcohol Abuse and Alcoholism; Notice of Closed Meetings

Pursuant to section 10(d) of the Federal Advisory Committee Act, as amended (5 U.S.C. Appendix 2), notice is hereby given of the following meetings.

The meetings will be closed to the public in accordance with the provisions set forth in sections 552b(c)(4) and 552b(c)(6), Title 5 U.S.C., as amended. The grant applications and the discussions could disclose confidential trade secrets or commercial property such as patentable material, and personal information concerning individuals associated with the grant applications, the disclosure of which would constitute a clearly unwarranted invasion of personal privacy.

Name of Committee: National Institute on Alcohol Abuse and Alcoholism Special Emphasis Panel DD–73 Special Emphasis Panel.

Date: August 15, 2006.

Time: 2 p.m. to 4 p.m.

Agenda: To review and evaluate grant applications.

Place: National Institutes of Health, 5635 Fishers Lane, 3146, Bethesda, MD 20892, (Telephone Conference Call).

Contact Person: Sathasiva B. Kandasamy, PhD, Scientific Review Administrator, Extramural Project Review Branch, Office of Scientific Affairs, National Institute on Alcohol Abuse and Alcoholism, Bethesda, MD 20892–9304, (301) 443–2926, *skandasa@mail.nih.gov.*

This notice is being published less than 15 days prior to the meeting due to the timing limitations imposed by the review and funding cycle.

Name of Committee: National Institute on Alcohol and Alcoholism Special Emphasis Panel A New Annual Alcohol Research Forum: Guze Symposium.

Date: August 21, 2006.

Time: 1 p.m. to 2 p.m.

Agenda: To review and evaluate grant applications.

Place: National Institutes of Health, 5635 Fishers Lane, 3146, Bethesda, MD 20892, (Telephone Conference Call).

Contact Person: Lorraine Gunzerath, PhD, MBA, Scientific Review Administrator, National Institute on Alcohol Abuse and Alcoholism, Office of Extramural Activities, Extramural Project Review Branch, 5635 Fishers Lane, Room 3043, Bethesda, MD 20892–9304, 301–443–2369, *lgunzera@mail.nih.gov.*

This notice is being published less than 15 days prior to the meeting due to the timing limitations imposed by the review and funding cycle.

Name of Committee: National Institute on Alcohol and Alcoholism Special Emphasis Panel Fellowships.

Date: August 22, 2006.

Time: 8:30 a.m. to 5 p.m.

Agenda: To review and evaluate grant applications.

Place: Bethesda Marriott, 5151 Pooks Hills Road, Bethesda, MD 20814.

Contact Person: Lorraine Gunzerath, PhD, MBA, Scientific Review Administrator, National Institute on Alcohol Abuse and Alcoholism, Office of Extramural Activities, Extramural Project Review Branch, 5635 Fishers Lane, Room 3043, Bethesda, MD 20892–9304, 301–443–2369, *lgunzera@mail.nih.gov.*

This notice is being published less than 15 days prior to the meeting due to the timing limitations imposed by the review and funding cycle.

Name of Committee: National Institutes on Alcohol Abuse and Alcoholism Special Emphasis Panel DD–72 Special Emphasis Panel.

Date: August 24, 2006.

Time: 1 p.m. to 3 p.m.

Agenda: To review and evaluate grant applications.

Place: National Institutes of Health, 5635 Fishers Lane, Room 3045, Bethesda, MD 20892, (Telephone Conference Call).

Contact Person: Sathasiva B. Kandasamy, PhD, Scientific Review Administrator, Extramural Project Review Branch, Office of Scientific Affairs, National Institute on Alcohol Abuse and Alcoholism, Bethesda, MD 20892–9304, (301) 443–2926, *skandasa@mail.nih.gov.*

(Catalogue of Federal Domestic Assistance Program Nos. 93.271, Alcohol Research Career Development Awards for Scientists and Clinicians; 93.272, Alcohol National Research Service Awards for Research Training; 93.273, Alcohol Research Programs;

93.891, Alcohol Research Center Grants, National Institutes of Health, HHS)

Dated: July 27, 2006.

Anna Snouffer,

Acting Director, Office of Federal Advisory Committee Policy.

[FR Doc. 06–6836 Filed 8–9–06; 8:45 am]

BILLING CODE 4140–01–M

DEPARTMENT OF HEALTH AND HUMAN SERVICES

National Institutes of Health

National Library of Medicine; Notice of Closed Meeting

Pursuant to section 10(d) of the Federal Advisory Committee Act, as amended (5 U.S.C. Appendix 2), notice is hereby given of the following meeting.

The meeting will be closed to the public in accordance with the provisions set forth in sections 552b(c)(4) and 552b(c)(6), Title 5 U.S.C., as amended. The grant applications and the discussions could disclose confidential trade secrets or commercial property such as patentable material, and personal information concerning individuals associated with the grant applications, the disclosure of which would constitute a clearly unwarranted invasion of personal privacy.

Name of Committee: National Library of Medicine Special Emphasis Panel, Scholarly Works (G13).

Date: September 6, 2006.

Time: 1 p.m. to 2 p.m.

Agenda: To review and evaluate grant applications.

Place: National Library of Medicine, 6705 Rockledge Drive, Suite 301, Bethesda, MD 20892, (Telephone Conference Call).

Contact Person: Zoe E. Huang, MD, Health Science Administrator, Extramural Programs, National Library of Medicine, Rockledge 1 Building, 6705 Rockledge Drive, Suite 301, MSC 7968, Bethesda, MD 20892–7968, 301–594–4937, *huangz@mail.nih.gov.*

(Catalogue of Federal Domestic Assistance Program Nos. 93.879, Medical Library Assistance, National Institutes of Health, HHS)

Dated: August 4, 2006.

Anna Snouffer,

Acting Director, Office of Federal Advisory Committee Policy.

[FR Doc. 06–6822 Filed 8–9–06; 8:45 am]

BILLING CODE 4140–01–M

DEPARTMENT OF HEALTH AND HUMAN SERVICES

National Institutes of Health

Center for Scientific Review; Amended Notice of Meeting

Notice is hereby given of a change in the meeting of the Center for Scientific Review Special Emphasis Panel, August 8, 2006, 3 p.m. to August 8, 2006, 4:30 p.m., National Institutes of Health, 6701 Rockledge Drive, Bethesda, MD 20892 which was published in the **Federal Register** on July 28, 2006, 71 FR 42866.

The time of the meeting on August 8, 2006 has been changed to 4 p.m. to 5:30 p.m. The meeting date and location remain the same. The meeting is closed to the public.

Dated: August 1, 2006.

Anna Snouffer,

Acting Director, Office of Federal Advisory Committee Policy.

[FR Doc. 06–6825 Filed 8–9–06; 8:45 am]

BILLING CODE 4140–01–M

DEPARTMENT OF HEALTH AND HUMAN SERVICES

National Institutes of Health

Center for Scientific Review; Notice of Closed Meetings

Pursuant to section 10(d) of the Federal Advisory Committee Act, as amended (5 U.S.C. Appendix 2), notice is hereby given of the following meetings.

The meetings will be closed to the public in accordance with the provisions set forth in sections 552b(c)(4) and 552b(c)(6), Title 5 U.S.C., as amended. The grant applications and the discussions could disclose confidential trade secrets or commerical property such as patentable material, and personal information concerning individuals associated with the grant applications, the disclosure of which would constitute a clearly unwarranted invasion of personal privacy.

Name of Committee: Center for Scientific Review Special Emphasis Panel, Shared Instrumentation: Imaging.

Date: September 14–15, 2006.

Time: 8 a.m. to 5 p.m.

Agenda: To review and evaluate grant applications.

Place: Clarion Hotel Bethesda Park, 8400 Wisconsin Avenue, Bethesda, MD 20814.

Contact Person: Khalid Masood, PhD, Scientific Review Administrator, Center for Scientific Review, National Institutes of Health, 6701 Rockledge Drive, Room 5120, MSC 7854, Bethesda, MD 20892, 301–435–2392, *masoodk@csr.nih.gov.*

Name of Committee: Center for Scientific Review Special Emphasis Panel, Software Development and Maintenance.

Date: September 17–18, 2006.

Time: 4:30 p.m. to 4:30 p.m.

Agenda: To review and evaluate grant applications.

Place: Residence Inn Bethesda, 7335 Wisconsin Avenue, Bethesda, MD 20814.

Contact Person: Marc Rigas, PhD, Scientific Review Administrator, Center for Scientific Review, National Institutes of Health, 6701 Rockledge Drive, Room 4194, MSC 7826, Bethesda, MD 20892, 301–402–1074, *rigasm@csr.nih.gov.*

Name of Committee: Digestive Sciences Integrated Review Group Clinical and Integrative Gastrointestinal Pathobiology Study Section.

Date: September 17–19, 2006.

Time: 6 a.m. to 4 p.m.

Agenda: To review and evaluate grant applications.

Place: Bethesda Marriott Suites, 6711 Democracy Boulevard, Bethesda, MD 20817.

Contact Person: Mushtag A. Khan, DVM, PhD, Scientific Review Administrator, Center for Scientific Review, National Institutes of Health, 6701 Rockledge Drive, Room 2176, MSC 7818, Bethesda, MS 20892, 301–435–1778, *khanm@csr.nih.gov.*

Name of Committee: Digestive Sciences Integrated Review Group Gastrointestinal Cell and Molecular Biology Study Section.

Date: September 18, 2006.

Time: 7:30 a.m. to 6 p.m.

Agenda: To review and evaluate grant applications.

Place: Bethesda Park Clarion Hotel, 8400 Wisconsin Avenue, Bethesda, MD 20814.

Contact Person: Najma Begum, PhD, Scientific Review Administrator, Center for Scientific Review, National Institutes of Health, 6701 Rockledge Drive, Room 2175, MSC 7818, Bethesda, MD 20892, 301–435–1243, *begumn@csr.nih.gov.*

Name of Committee: Digestive Sciences Integrated Review Group Hepatobiliary Pathophysiology Study Section.

Date: September 18–19, 2006.

Time: 8:30 a.m. to 4 p.m.

Agenda: To review and evaluate grant applications.

Place: Ritz Carlton Hotel, 1150 22nd Street, NW., Washington, DC 20037.

Contact Person: Rass M. Shayiq, PhD, Scientific Review Administrator, Center for Scientific Review, National Institutes of Health, 6701 Rockledge Drive, Room 2182, MSC 7818, Bethesda, MD 20892, (301) 435–2359, *shayiqr@csr.nih.gov.*

(Catalogue of Federal Domestic Assistance Program Nos. 93.306, Comparative Medicine; 93.333, Clinical Research, 93.306, 93.333, 93.337, 93.393–93.396, 93.837–93.844, 93.846–93.878, 93.892, 93.893, National Institutes of Health, HHS.)

Dated: August 1, 2006.

Anna Snouffer,

Acting Director, Office of Federal Advisory Committee Policy.

[FR Doc. 06–6826 Filed 8–9–06; 8:45 am]

BILLING CODE 4140–01–M

DEPARTMENT OF THE INTERIOR

Bureau of Land Management

[CO–800;1920–PP–4070]

Northern San Juan Basin Coal Bed Methane Development Project, CO

AGENCY: Bureau of Land Management, Department of the Interior and U.S. Forest Service, Department of Agriculture (Joint Lead Agencies).

ACTION: Notice of availability.

SUMMARY: Pursuant to the National Environmental Policy Act of 1969, the Federal Land Policy Management Act of 1976 and other regulatory requirements, the Joint Lead Agencies announce the availability of the Northern San Juan Basin Coal Bed Methane Development Project Final Environmental Impact Statement (FEIS) for coal bed natural gas development in the northern portion of the San Juan Basin, in La Plata and Archuleta Counties, Colorado. The Joint Lead Agencies have prepared the FEIS to provide agency decision makers and the public with comprehensive environmental impact information on which to base coal bed natural gas project development decisions.

DATES: The FEIS will be available until September 11, 2006, before any final project determinations will be made.

ADDRESSES: Questions, requests for copies of the FEIS, or new information that is relevant to project decision making may be sent by mail to the San Juan Public Lands Center, 15 Burnett Court, Durango, CO 81301, Attn: Walt Brown, or by E-mail to: *nsjb-feis@arcadis-us.com* by September 11, 2006. The FEIS is also available on the Internet at *http://nsjb-eis.net/*.

Names and street addresses of respondents, will be available for public review at the San Juan Public Lands Center, 15 Burnett Court, Durango, Colorado, during regular business hours (8 a.m. to 4:30 p.m.), Monday through Friday, except holidays.

Individual respondents may request confidentiality. If you wish to withhold your name or street address from public review or from disclosure under the Freedom of Information Act, you must state this prominently at the beginning of your written comment. Such requests will be honored to the extent allowed by law. All submissions from organizations or businesses, and from individuals identifying themselves as representatives of officials of organizations or businesses, will be made available for public inspection in their entirety.

FOR FURTHER INFORMATION CONTACT: Walt Brown or Jim Powers at the above address, or phone: 970–385–1304.

SUPPLEMENTARY INFORMATION: The FEIS analyzes industry's gas field development proposal (approximately two hundred sixty-two new wells) and four other alternatives in a 125,000-acre Study Area in the Northern San Juan Basin of Colorado. The Study Area occupies portions of La Plata and Archuleta Counties, and is bounded on the south by the Southern Ute Reservation and on the west, north and east by the arcing line of the base of the Pictured Cliffs sandstone.

The Study Area consists of approximately 7,000 acres of BLM administered land, 49,000 acres of U.S. Forest Service administered land, 9,000 acres of private lands with federal minerals and 60,000 acres of state or privately held (fee) lands with non-federal minerals.

Dated: July 26, 2006.

Mark W. Stiles,

Center Manager/Forest Supervisor, San Juan Public Lands Center, Durango, Colorado.

[FR Doc. E6–12610 Filed 8–9–06; 8:45 am]

BILLING CODE 4310–JB–P

DEPARTMENT OF THE INTERIOR

Bureau of Land Management

[MT–919–1990–NU–021E]

Notice of Supplementary Rules for Public Land in South Dakota

AGENCY: Bureau of Land Management, Interior.

ACTION: Direct final supplementary rules.

SUMMARY: The Bureau of Land Management (BLM) South Dakota Field Office is publishing supplementary rules for public lands in the Fort Meade Recreation Area in the state of South Dakota. The rules are needed in order to protect the area's natural resources and provide for public health and safety. The rules are based on existing regulations and address use, camping and occupancy, vehicles and off-road vehicles, conduct, firearms and permits. The supplementary rules promote consistency between BLM and other natural resource agencies including the South Dakota Game, Fish & Parks Department.

DATES: These supplementary rules are effective October 10, 2006 without further action, unless adverse comment is received by September 11, 2006. If adverse comment is received, BLM will publish a timely withdrawal of the supplementary rules in the **Federal Register.**

ADDRESSES: Comments may be mailed or hand-delivered to the Office of Law Enforcement, BLM, Montana/Dakotas State Office, P.O. Box 36800, Billings, MT 59107–6800.

FOR FURTHER INFORMATION CONTACT: Bart Fitzgerald, Special Agent in Charge, Montana/Dakotas State Office, (406) 896–5183. Persons who use a telecommunications device for the deaf (TDD) may contact this individual by calling the Federal Information Relay Service (FIRS) at (800) 877–8339, 24 hours a day, 7 days a week.

SUPPLEMENTARY INFORMATION:

I. Procedures for Submitting Comments
II. Background
III. Procedural Matters

I. Procedures for Submitting Comments

Written comments on the direct final rule should be specific, confined to issues pertinent to the direct final rule, and should explain the reason for any recommended change. Where possible, comments should reference the specific section or paragraph of the supplementary rules that you are addressing. BLM may not necessarily consider or include in the Administrative Record for the final rule comments which BLM receives after the close of the comment period (See **DATES**) or comments delivered to an address other than those listed above (See **ADDRESSES**).

Comments, including names, streets addresses, and other contact information of respondents, will be available for public review at the Montana/Dakotas State Office, 5001 Southgate Drive, Billings, MT, from 7:45 a.m. to 4:30 p.m., Monday through Friday, except Federal holidays. Individual respondents may request confidentiality. If you wish to request that BLM consider withholding your name, street address, and other contact information (such as: Internet address, FAX or phone number) from public review or from disclosure under the Freedom of Information Act, you must state this prominently at the beginning of your comment. BLM will honor requests for confidentiality on a case-by-case basis to the extent allowed by law. BLM will make available for public inspection in their entirety all submissions from organizations or businesses, and from individuals identifying themselves as representatives or officials of organizations or businesses.

II. Background

BLM is publishing these supplementary rules in order to promote

consistency between BLM (on issues of use, camping and occupancy, vehicles and off-road vehicles, conduct, firearms, boating and permits) and other land management agencies including the South Dakota Game, Fish & Parks Department. These supplementary rules will apply to the public lands within the Fort Meade Recreation Area in the state of South Dakota. These rules are necessary to protect the area's natural resources and to provide for the public's health and safety, to provide needed guidance in the areas of camping, occupancy, and recreation, and to allow for the assessment of penalties that are more commensurate with the level of the prohibited acts.

Maps of the affected areas are available at the South Dakota Field Office in Belle Fourche, SD. The areas also have signs marking the applicable boundaries.

These supplementary rules were open to public comment upon publication of the South Dakota Field Office Resource Management Plan as proposed supplementary rules. No public comments were received; therefore, the rules are now being published as direct final rules. This means that they will go into effect on October 10, 2006, without further notice, unless we receive adverse comments by September 11, 2006. In the event that we receive such comments on these direct final supplementary rules, we will withdraw the direct final supplementary rules and publish a proposed rule addressing the comments and making changes in the rules if necessary.

III. Procedural Matters

Executive Order 12866, Regulatory Planning and Review

These supplementary rules are not a significant regulatory action and are not subject to review by Office of Management and Budget under Executive Order 12866. The supplementary rules will not have an effect of $100 million or more on the economy. They will not adversely affect in a material way the economy, productivity, competition, jobs, the environment, public health or safety, or state, local, or tribal governments or communities. These supplementary rules will not create a serious inconsistency or otherwise interfere with an action taken or planned by another agency. These direct final supplementary rules do not alter the budgetary effects of entitlements, grants, user fees, or loan programs or the rights or obligations of their recipients; nor do they raise novel legal or policy issues. They merely impose rules of conduct and impose other limitations on certain recreational activities on certain public lands to protect natural resources and human health and safety.

Clarity of the Supplementary Rules

Executive Order 12866 requires each agency to write regulations that are simple and easy to understand. We invite your comments on how to make these supplementary rules easier to understand, including answers to questions such as the following: (1) Are the requirements in the supplementary rules clearly stated? (2) Do the supplementary rules contain technical language or jargon that interferes with their clarity? (3) Does the format of the supplementary rules (grouping and order of sections, use of headings, paragraphing, etc.) aid or reduce their clarity? (4) Would the supplementary rules be easier to understand if they were divided into more (but shorter) sections? (5) Is the description of the supplementary rules in the **SUPPLEMENTARY INFORMATION** section of this preamble helpful to your understanding of the supplementary rules? How could this description be more helpful in making the supplementary rules easier to understand?

Please send any comments you have on the clarity of the supplementary rules to the address specified in the **ADDRESSES** section.

National Environmental Policy Act

BLM has prepared an environmental assessment (EA) and has found that the supplementary rules are not a major Federal action significantly affecting the quality of the human environment under section 102(2)(C) of the Environmental Protection Act of 1969 (NEPA), 42 U.S.C. 4332(2)(C). A detailed statement under NEPA is not required. BLM has placed the EA and the Finding of No Significant Impact (FONSI) on file in the BLM Administrative Record at the address specified in the **ADDRESSES** section. BLM invites the public to review these documents and suggests that anyone wishing to submit comments in response to the EA and FONSI do so in accordance with the Written Comments section above.

Regulatory Flexibility Act

Congress enacted the Regulatory Flexibility Act of 1980 (RFA), as amended, 5 U.S.C. 601–612, to ensure that Government regulations do not unnecessarily or disproportionately burden small entities. The RFA requires a regulatory flexibility analysis if a rule would have a significant economic impact, either detrimental or beneficial, on a substantial number of small entities. These supplementary rules should have no effect on business entities of whatever size. They merely impose reasonable restrictions on certain recreational activities on certain public lands to protect natural resources and the environment, and human health and safety. Therefore, BLM has determined under the RFA that these supplementary rules will not have a significant economic impact on a substantial number of small entities.

Small Business Regulatory Enforcement Fairness Act (SBREFA)

These supplementary rules are not a ''major rule'' as defined at 5 U.S.C. 804(2). They will not result in an effect on the economy of $100 million or more, in an increase in costs or prices, or in significant adverse effects on competition, employment, investment, productivity, innovation, or on the ability of United States-based enterprises to compete with foreign-based enterprises in domestic and export markets. They merely impose reasonable restrictions on certain recreational activities on certain public lands to protect natural resources and the environment, and human health and safety

Unfunded Mandates Reform Act

These supplementary rules do not impose an unfunded mandate on state, local, or tribal governments or the private sector of more than $100 million per year; nor do these supplementary rules have a significant or unique effect on state, local, or tribal governments or the private sector. They merely impose reasonable restrictions on certain recreational activities on certain public lands to protect natural resources and the environment, and human health and safety. They also specifically call for compliance with state laws and regulations. Therefore, BLM is not required to prepare a statement containing the information required by the Unfunded Mandates Reform Act (2 U.S.C. 1531 *et seq.*)

Executive Order 12630, Governmental Actions and Interference With Constitutionally Protected Property Rights (Takings)

These supplementary rules do not represent a government action capable of interfering with Constitutionally protected property rights. Therefore, the Department of the Interior has determined that the rule will not cause a taking of private property or require preparation of a takings assessment under this Executive Order.

Executive Order 13132, Federalism

The supplementary rules will not have a substantial direct effect on the states, on the relationship between the national government and the states, or on the distribution of power and responsibilities among the various levels of government. The supplementary rules in several instances call for compliance with state law. Therefore, in accordance with Executive Order 13132, BLM has determined that these supplementary rules do not have sufficient Federalism implications to warrant preparation of a Federalism Assessment.

Executive Order 12988, Civil Justice Reform

Under Executive Order 12988, the Office of the Solicitor determined that these supplementary rules will not unduly burden the judicial system and that they meet the requirements of sections 3(a) and 3(b)(2) of the Order.

Executive Order 13175, Consultation and Coordination With Indian Tribal Governments

In accordance with Executive Order 13175, we have found that these supplementary rules do not include policies that have tribal implications. There are no Indian Reservations adjacent to the Fort Meade Recreation Area, nor are there any Indian Trust responsibilities issues such as mineral extraction or leases that affect the subject lands.

Paperwork Reduction Act

These supplementary rules do not contain information collection requirements that the Office of Management and Budget must approve under the Paperwork Reduction Act of 1995, 44 U.S.C. 3501 *et seq.*

Author

The principal authors of these supplementary rules are William McDonald, Law Enforcement Ranger, South Dakota Field Office, and Jason Caffey, Law Enforcement Ranger, Montana State Office, BLM.

For the reasons stated in the preamble and under the authorities for supplementary rules found under 43 CFR 8365.1–6, 43 CFR 8364.1, 43 U.S.C. 1740, 16 U.S.C. 670h(c)(5), and 43 U.S.C. 315a, the Montana/Dakotas State Director, Bureau of Land Management is issuing supplementary rules for public lands managed by the BLM in South Dakota, to read as follows:

Supplementary Rules for Fort Meade Recreation Area

The following regulations apply to public lands in the Fort Meade Recreation Area:

1. The use of tree stands must adhere to the regulations listed in South Dakota Game, Fish & Parks Department Code (section 41:03:01:19).
2. You may hunt with firearms and legally pursue game under state law within the northern portion of Fort Meade Recreation Area. However, discharge of firearms for other than hunting and the pursuit of game under state law within the northern portion of the Fort Meade Recreation Area is prohibited. The northern portion of the Fort Meade Recreation Area is defined as the northern-most quarter of the area which lies north of the ridgeline near Sly Hill. The area includes the portions of Township 6 North, Range 5 East, Sections 25, 26, 27, 34, 35 & 36, and Township 6 North, Range 5 East, Sections 2, 3, and 10 that are east of Old Highway 79. Actual boundaries are well marked with signs.
3. All firearms use is prohibited within the remaining portion of the Fort Meade Recreation Area. This includes the small area west of Old Highway 79, as well as the southern three-quarters of the Recreation Area. This includes target shooting as well as the legal pursuit of game with firearms during hunting seasons established by the state. The only exception is the use of muzzleloaders within the authorized range in the northwest quarter of Township 5 North, Range 5 East, Section 11.
4. The use or possession afield of metal detectors within the Fort Meade Recreation Area is prohibited.
5. Uncased firearms and bows are prohibited year round in established campgrounds.
6. Gasoline motors are prohibited on Fort Meade Reservoir.
7. Snowmobiles are prohibited within the Fort Meade Recreation Area.

Penalties

On all public lands, under section 303(a) of the Federal Land Policy and Management Act of 1976, 43 U.S.C. 1733(a), 43 CFR 8360.0–7 and 43 CFR 9212.4, any person who violates any of these supplementary rules, closures or restrictions on public lands within the boundaries established in the rules may be tried before a United States Magistrate and fined no more than $1,000 or imprisoned for no more than 12 months, or both. Such violations may also be subject to the enhanced fines provided for by 18 U.S.C. 3571.

On public lands within grazing districts (43 U.S.C. 315) and grazing leased lands (43 U.S.C. 315m), under the Taylor Grazing Act, 43 U.S.C. 315(a), any person who violates any of these supplementary rules on public lands within the boundaries established in the rules may be tried before a United States Magistrate and fined no more than $500.00. Such violations may also be subject to the enhanced fines provided for by 18 U.S.C. 3571.

On public lands fitting the criteria in the Sikes Act, 16 U.S.C. 670j(a)(2), any person who violates any of these supplementary rules on public lands within the boundaries established in the rules may be tried before a United States Magistrate and fined no more than $500.00 or imprisoned for no more than six months, or both. Such violations may also be subject to the enhanced fines provided for by 18 U.S.C. 3571.

On public lands designated under the National Trails System (16 U.S.C. 1241–1249) any person who violates any of these supplementary rules on public lands within the boundaries established in the rules may be tried before a United States Magistrate and fined no more than $500.00 or imprisoned for no more than six months, or both. Such violations may also be subject to the enhanced fines provided for by 18 U.S.C. 3571.

Martin C. Ott,

Montana/Dakotas State Director, Bureau of Land Management.

[FR Doc. E6–12927 Filed 8–9–06; 8:45 am]

BILLING CODE 4310–33–P

DEPARTMENT OF THE INTERIOR

Bureau of Reclamation

Notice of Intention To Bill for Trinity Public Utilities District Assessment

AGENCY: Bureau of Reclamation, Interior.

ACTION: Notice of interim billing procedures.

SUMMARY: To comply with the requirements of Public Law 106–377, the Mid-Pacific Region of the Bureau of Reclamation (Reclamation) will be billing Central Valley Project (CVP) water contractors for their share of the Trinity Public Utilities District (TPUD) assessment. This will be an interim process until supplementary rate setting policies are established that ensure full recovery of the assessment without further appropriation as required in the law. Billings will be prepared with payment due within 30 days and the billing period will cover the TPUD

assessment for Fiscal Years 2006 and 2007.

DATES: Submit written comments on the direct billing of the TPUD assessment on or before August 18, 2006 to the address below.

ADDRESSES: Written comments on this change in process for collecting the TPUD assessment should be addressed to the Bureau of Reclamation, Attention: Tom Ruthford, MP–3600, 2800 Cottage Way, Sacramento, CA 95825.

FOR FURTHER INFORMATION CONTACT: For additional information, please contact Katherine Thompson at (916) 978–5550 or E-mail: *kthompson@mp.usbr.gov.*

SUPPLEMENTARY INFORMATION: Beginning in Fiscal Year 2001 and thereafter, Public Law 106–377, Section 203 required Reclamation to collect annually from CVP water contractors an assessment for TPUD. Section 203 states: ''Beginning in fiscal year 2001 and thereafter, the Secretary of the Interior shall assess and collect annually from Central Valley Project (CVP) water and power contractors the sum of $540,000 (June 2000 price levels) and remit, without further appropriation, the amount collected annually to the Trinity Public Utilities District (TPUD). This assessment shall be payable 70 percent by CVP Preference Power Customers and 30 percent by CVP Water Customers. The CVP Water Contractor share of this assessment shall be collected by the Secretary through established Bureau of Reclamation (Reclamation) Operation and Maintenance rate setting practices. The CVP Power Contractor share of this assessment shall be assessed by reclamation to the Western Area Power Administration, Sierra Nevada Region (Western), and collected by Western through established power rate setting practices.''

Prior to FY 2006, these funds had been collected as a component of the water rates through the water rate setting process. Further, the Mid-Pacific Region's system to account for water deliveries and resultant revenues remits revenue directly to the U.S. Treasury. While this is appropriate for water revenues, the system is not capable of collecting and accounting for the TPUD assessment separately from water revenue. Consequently, the Mid-Pacific Region is in the process of (1) developing a supplementary rate setting policy to collect the TPUD assessment separately from water revenue; (2) analyzing the extent of system changes, costs, and time required to account for TPUD assessment separately from water revenues; and (3) identifying and implementing preferred system changes.

As an interim measure, the Mid-Pacific Region will bill water contractors for the TPUD assessment. Billings will cover collections for Fiscal Years 2006 and 2007 and the TPUD surcharge will be eliminated from the published water rates for this time period.

John F. Davis,

Deputy Regional Director, Mid-Pacific Region.

[FR Doc. 06–6816 Filed 8–9–06; 8:45 am]

BILLING CODE 4310–MN–M

DEPARTMENT OF JUSTICE

Notice of Lodging of Partial Consent Decree Under the National Marine Sanctuaries Act

Notice is hereby given that on July 25, 2006, a proposed Partial Consent Decree with All Oceans Transportation, Inc., Italia Marittima S.p.A. (formerly Lloyd Triestino Di Navigazione), and Yang Ming Marine Transport Corporation, *in personam*; and against the M/V YM PROSPERITY (previously known as the M/V MED TAIPEI), *in rem*, in *United States* v. *All Oceans Transportation, Inc., et al.*, No. 06–4519–JF (N.D. Cal.), was lodged with the United States District Court for the Northern District of California.

In this action, the United States seeks to recover from various defendants, pursuant to the National Marine Sanctuaries Act, 16 U.S.C. 1443(a)(1), response costs and damages resulting from destruction of or injury to natural resources caused by the loss of approximately fifteen shipping containers from the M/V YM Prosperity in the Monterey Bay Marine Sanctuary on or about February 26, 2004. Under the proposed Partial Consent Decree, defendants will pay $3,250,000.00 to the United States.

The Department of Justice will receive for a period of thirty (30) days from the date of this publication comments relating to the Partial Consent Decree. Comments should be addressed to the Assistant Attorney General, Environment and Natural Resources Division, P.O. Box 7611, U.S. Department of Justice, Washington, DC 20044–7611, and should refer to *United States* v. *All Oceans Transportation, Inc., et al.*, (N.D. Cal.), DOJ Ref. No. 90–5–1–1–08681.

The Partial Consent Decree may be examined at the office of the Monterey Bay National Marine Sanctuary, 299 Foam Street, Monterey, California. During the public comment period, the Partial Consent Decree may also be examined on the following Department of Justice Web site, *http://www.usdoj.gov/enrd/open.html.* A copy of the Partial Consent Decree may also be obtained by mail from the Consent Decree Library, U.S. Department of Justice, P.O. Box 7611, Washington, DC 20044–7611 or by faxing or e-mailing a request to Tonia Fleetwood (*tonia.fleetwood@usdoj.gov*), fax no. (202) 514–0097, phone confirmation number (202) 514–1547. In requesting a copy from the Consent Decree Library, please refer to *United States* v. *All Oceans Transportation, Inc., et al.*, (N.D. Cal.), DOJ Ref. No. 90–5–1–1–08681, and enclose a check in the amount of $10.00 (25 cents per page reproduction cost) payable to the U.S. Treasury or, if by e-mail or fax, forward a check in that amount to the Consent Decree Library at the stated address.

Henry S. Friedman,

Assistant Section Chief, Environmental Enforcement Section, Environment and Natural Resources Division.

[FR Doc. 06–6810 Filed 8–9–06; 8:45 am]

BILLING CODE 4410–15–M

DEPARTMENT OF JUSTICE

Notice of Lodging of Consent Decree Under the Clean Air Act

Notice is hereby given that on July 21, 2006 a proposed consent decree in *United States* v. *American Iron Oxide Company and Magnetics International, Inc.,* Civil Action No. 2: 06–cv–00251–WCL–APR was lodged with the United States District Court for the Northern District of Indiana.

In this action the United States sought civil penalties and injunctive relief for alleged violations of Section 113(b) of the Clean Air Act, 42 U.S.C. 7413(b), more specifically the National Emission Standards for Hazardous Air Pollutants (NESHAP) for steel pickling—HC1, at three steel pickling facilities: American Iron Oxide's facilities in Portage, Indiana, and Grandview, Indiana, and Magnetics International, Inc.'s facility in Burns Harbor, Indiana. The proposed Consent Decree requires the Defendants to: (a) Pay a total civil penalty of $100,000; (b) undertake two community-based Supplemental Environmental Projects; (c) make process and equipment modifications at the three facilities; (d) conduct stack tests to demonstrate compliance with the NESHAP at the Portage and Magnetic Facilities, with AMROX using a stack test to determine if the Rockport Facility is subject to the NESHAP; and (e) comply with all of the requirements of the NESHAP at the Portage and Magnetics Facilities, as well as at the

Rockport Facility if that plant is determined to be subject to the NESHAP.

The Department of Justice will receive for a period of thirty (30) days from the date of this publication comments relating to the proposed Consent Decree. Comments should be addressed to the Assistant Attorney General, Environment and Natural Resources Division, P.O. Box 7611, US Department of Justice, Washington, DC 20044–7611, and should refer to *United States* v. *American Iron Oxide Company, et al.,* D.J. Ref. 90–5–2–1–07939.

The proposed Consent Decree may be examined at the Office of the United States Attorney for the Northern District of Indiana, 5400 Federal Plaza, Suite 1500, Hammond, Indiana 46320 (contact Asst. U.S. Attorney Wayne Ault (219–937–5500), and at U.S. EPA Region 5, 7th Floor Records Center, 77 West Jackson Blvd., Chicago, Illinois 60604 (contact Assoc. Regional Counsel Cynthis King (312–886–6831)). During the public comment period, the proposed consent decree may also be examined on the following Department of Justice Web site, *http://www.usdoj.gov/enrd/open.html.* A copy of the proposed consent decree may also be obtained by mail from the Consent Decree Library, P.O. Box 7611, US Department of Justice, Washington, DC 20044–7611 or by faxing or e-mailing a request to Tonia Fleetwood (*tonia.fleetwood@usdoj.gov*), fax no. (202) 514–0097, phone confirmation number (202) 514–1547. In requesting a copy from the Consent Decree Library, please enclose a check in the amount of $13.25 (25 cents per page reproduction cost) payable to the US Treasury or, if by e-mail or fax, forward a check in that amount to the Consent Decree Library at the stated address.

William Brighton,

Assistant Chief, Environmental, Enforcement Section, Environment and Natural Resources, Division.

[FR Doc. 06–6804 Filed 8–9–06; 8:45 am]

BILLING CODE 4410–15–M

DEPARTMENT OF JUSTICE

Notice of Lodging of Consent Decree Under the Oil Pollution Act

Notice is hereby given that on July 25, 2006, a proposed Consent Decree in *United States et al.* v. *Bean Stuyvesant, LLC et al.,* Civil Action No. C–03–5694 CRB, was lodged with the United States District Court for the Northern District of California.

The Consent Decree settles claims for natural resource damages under the Oil Pollution Act, 33 U.S.C. 2701 et seq., and certain state law claims that arose in connection with a 1999 spill of fuel oil from the dredge M/V Stuyvesant in the vicinity of Humboldt Bay, near Eureka, California. Under the Consent Decree the defendants will: (1) Pay $1,975,000 jointly to the state and Federal natural resource trustees for natural resource damages; (2) pay $887,090 to cover assessment costs incurred by the U.S. Department of the Interior, the Natural Oceanic and Atmospheric Administration, the California Department of Fish and Game, and the California State Lands Commission; (3) pay $48,000 to resolve state law claims; and (4) purchase a conservation easement to protect approximately 625 acres of redwood forest in perpetuity as habitat for the marbled murrelet.

The Department of Justice will receive for a period of thirty (30) days from the date of this publication comments relating to the Consent Decree. Comments should be addressed to the Assistant Attorney General, Environment and Natural Resources Division, P.O. Box 7611, U.S. Department of Justice, Washington, DC 20044–7611, and should refer to *United States et al.* v. *Bean Stuyvesant LLC et al.,* D.J. Ref. 90–5–1–1–07061.

During the public comment period, the Consent Decree may be examined on the following Department of Justice Web site *http://www.usdoj.gov/enrd/open.html.* A copy of the Consent Decree may also be obtained by mail from the Consent Decree Library, P.O. Box 7611, U.S. Department of Justice, Washington, DC 20044–7611 or by faxing or e-mailing a request to Tonia Fleetwood (*tonia.fleetwood@usdoj.gov*), fax no. (202) 514–0097, phone confirmation number (202) 514–1547. In requesting a copy from the Consent Decree Library, please enclose a check in the amount of $17.75 (25 cents per page reproduction costs) payable to the U.S. Treasury.

Henry S. Friedman,

Assistant Chief, Environmental Enforcement Section, Environmental and Natural Resources Division.

[FR Doc. 06–6809 Filed 8–9–06; 8:45 am]

BILLING CODE 4410–15–M

DEPARTMENT OF JUSTICE

Notice of Lodging of Consent Decree Pursuant to Clean Water Act

Notice is hereby given that on July 27, 2006, a proposed consent decree in *United States, et al.* v. *City of Chicopee*, Civil Action No. 06–30121–MAP, was lodged with the United States District Court for the District of Massachusetts.

The proposed consent decree will settle the United States' and Commonwealth of Massachusetts' claims for violations of the Clean Water Act, 33 U.S.C. 1251, *et seq.*, and the Massachusetts Clean Waters Act, Mass. Gen. Laws ch. 21, § 42, related to the City's combined sewer overflows (CSO's). Pursuant to the proposed consent decree, the City will pay $150,000 as civil penalty for such violations, as well as institute a two-phased CSO control plan.

The Department of Justice will receive for a period of thirty (30) days from the date of this publication comments relating to the proposed consent decree. Comments should be addressed to the Assistant Attorney General of the Environment and Natural Resources Division, Department of Justice, Washington, DC 20530, and should refer to *United States, et al.*, v. *City of Chicopee*, Civil Action No. 06–30121–MAP, D.J. Ref. 90–5–1–1–07953.

The proposed consent decree may also be examined at the Office of the United States Attorney, District of Massachusetts, 1550 Main Street, U.S. Courthouse, Room 310, Springfield, MA. During the public comment period, the proposed consent decree may also be examined on the following Department of Justice Web site, *http://www.usdoj.gov/enrd/open.html.* A copy of the proposed consent decree may also be obtained by mail from the Consent Decree Library, P.O. Box 7611, U.S. Department of Justice, Washington, DC 20044–7611 or by faxing or e-mailing a request to Tonia Fleetwood (*tonia.fleetwood@usdoj.gov*), fax no. (202) 514–0097, phone confirmation number (202) 514–1547. If requesting a copy of the proposed consent decree, please so note and enclose a check in the amount of $10.00 (25 cents per page reproduction cost) payable to the U.S. Treasury.

Ronald Gluck,

Assistant Chief, Environmental Enforcement Section, Environment and Natural Resources Division.

[FR Doc. 06–6807 Filed 8–9–06; 8:45 am]

BILLING CODE 4410–15–M

DEPARTMENT OF JUSTICE

Notice of Lodging of Consent Decree Under Comprehensive Environmental Response, Compensation and Liability Act

Under 28 CFR 50.7, notice is hereby given that on July 18, 2006, a proposed Consent Judgment in *United States, et*

al. v. *Coltec Industries, Inc., et al.,* Civil Action No. 06–3493, was lodged with the United States District Court for the Eastern District of New York.

The proposed Consent Judgment resolves natural resource damages claims of the United States, on behalf of the Undersecretary of Commerce for Oceans and Atmosphere of the National Oceanic and Atmospheric Administration (''NOAA''), and the Secretary of the Interior (''DOI''), under the Comprehensive Environmental Response, Compensation, and Liability Act (''CERCLA'') , 42 U.S.C. 9601 *et seq.,* in connection with the Liberty Industrial Finishing Superfund Site in Oyster Bay, New York (''Site''), against Coltec Industries, Inc.; Goodrich, Corporation; 55 Motor Avenue LLC; Cubbies Properties, Inc.; Jefry Rosmarin; J. Jay Tanenbaum; Jan Burman; Jerome Lazarus; Liberty Associates; William Heller; Koch-Glitsch, LP; Beazer East, Inc.; and Liberty Aero, Inc. The proposed Consent Judgment also resolves potential contribution claims against the United States pursuant to Sections 107(a) and 113(f) of CERCLA, 42 U.S.C. 9607(a) and 9613(f). The proposed Consent Judgment requires the thirteen defendants to design and construct a fishladder in the Massapequa Preserve, Oyster Bay, New York (estimated at $173,000), and to reimburse NOAA and DOI for their past and estimated future costs in the amount of $131,500. The Untied States, on behalf of two Settling Federal Agencies, the Department of Defense and the General Services Administration, will pay about 43 percent of the total settlement, which will amount to approximately $130,000. The proposed Consent Judgment provides that the thirteen defendants and the Settling Federal Agencies are entitled to contribution protection as provided by Section 113(f)(2) of CERCLA, 42 U.S.C. 9613(f)(2) for matters addressed by the settlement. The proposed Consent Judgment also resoles natural resource damages claims of the State of New York, on behalf of Denise M. Sheehan, Commissioner of the New York State Department of Environmental Conservation and Trustee of Natural Resources of the State of New York.

The Department of Justice will receive for a period of thirty (30) days from the date of this publication comments relating to the proposed consent Judgment. Comments should be addressed to the Assistant Attorney General of the Environment and Natural Resources Division, Department of Justice, Washington, DC 20530, and should refer to *United States, et al.* v. *Coltec Industries, Inc., et al.,* Civil Action No. 04–1308, D.J. Ref. 90–11–2–1222/4, 90–11–3–766.

The proposed Consent Judgment may be examined at the Office of the United States Attorney, Eastern District of New York, One Pierrepont Plaza, 14th Fl., Brooklyn, New York 11201. During the public comment period, the proposed Consent Judgment may also be examined on the following Department of Justice Web site, *http://www.usdoj.gov/enrd/open.html.* A copy of the proposed Consent Judgment may be obtained by mail from the Consent Decree Library, P.O. Box 7611, U.S. Department of Justice, Washington, DC 20044–7611 or by faxing or e-mailing a request to Tonia Fleetwood (*Tonia.fleetwood@usdoj.gov*), fax no. (202) 514–0097, phone confirmation number (202) 514–1547. In requesting a copy of the proposed Consent Judgment, please enclose a check in the amount of $49.00 (25 cent per page reproduction cost) payable to the U.S. Treasury.

Ronald Gluck,

Assistant Section Chief, Environmental Enforcement Section, Environment and Natural Resources Division.

[FR Doc. 06–6806 Filed 8–9–06; 8:45 am]

BILLING CODE 4410–15–M

DEPARTMENT OF JUSTICE

Notice of Lodging Proposed Consent Decree

In accordance with Departmental Policy, 28 CFR 50.7, notice is hereby given that a proposed Consent Decree in *United States* v. *Currahee Club, LLC, et al.*. No. 06–CV–00113, was lodged with the United States District Court for the Northern District of Georgia on July 31, 2006.

This proposed Consent Decree concerns a complaint filed by the United States against Currahee Club, LLC, Currahee Partners, LLC, and Currahee Partners, II, LLC, pursuant to Sections 301 and 404 of the Clean Water Act, 33 U.S.C. 1311 and 1344, with respect to Defendants' alleged violations of the Clean Water Act by discharging pollutants into waters of the United States without a permit. The proposed Consent Decree resolves these allegations by requiring the restoration of off-site stream and wetlands properties in the upper Savannah River watershed and the payment of a civil penalty. The Department of Justice will accept written comments relating to this proposed Consent Decree for thirty (30) days from the date of publication of this Notice. Please address comments to Martin F. McDermott, United States Department of Justice, Environment and Natural Resources Division, Environmental Defense Section, P.O. Box 23986, Washington, DC 20006–3986 and refer to *United States* v. *Currahee Club, LLC, et al.*, DJ #90–5–1–1–17458.

The proposed Consent Decree may be examined at the Clerk's Office, United States District Court for the Northern District of Georgia, United States Courthouse, 75 Spring Street, SW., Atlanta, Georgia. In addition, the proposed Consent Decree may be viewed at *http://www.usdoj.gov/enrd/open.html.*

Stephen Samuels,

Assistant Chief, Environmental Defense Section, Environment & Natural Resources Division.

[FR Doc. 06–6805 Filed 8–9–06; 8:45 am]

BILLING CODE 4410–15–M

DEPARTMENT OF JUSTICE

Notice of Lodging of Consent Decree Under the Comprehensive Environmental Response, Compensation, and Liability Act

Consistent with 28 CFR 50.7 notice is hereby given that on July 21, 2006, a proposed consent decree in *United States* v. *Jamson laboratories, Inc.,* Civil Action No. *8:04–CV–245* was lodged with the United States District Court for the Middle District of Florida, Tampa Division.

In this action, brought pursuant to Section 107 of the Comprehensive Environmental Response, Compensation, and Liability Act (''the Act''), 42 U.S.C. 9607, the United States sought reimbursement for response costs incurred by the U.S. Environmental Protection Agency at the Dave Chemical Removal Action Site (''Site'') located in Tampa, Hillsborough County, Florida, against Jamson Laboratories, Inc., the owner of a facility at the Site and operator of the Site at the time of disposal. Under the decree, Settling Defendant will make three payments totaling $122,135.80, to resolve its liability for EPA costs incurred to clean up the Site.

The Department of Justice will receive for a period of thirty (30) days from the date of this publication comments relating to the proposed consent decree. Comments should be addressed to the Assistant Attorney General, Environment and Natural Resources Division, P.O. Box 7611, U.S. Department of Justice, Washington, DC 20044–7611, and should refer to *United States* v. *Jamson laborators, Inc.,* D.J. Ref. 90–11–3–08032/1.

The proposed consent decree may be examined at the Office of the United States Attorney, Middle District of Florida, Tampa Division, 400 North Tampa Street, Room 3200, Tampa, Florida 33602, and at U.S. EPA Region 4, Atlanta Federal Building, 61 Forsyth Street, Atlanta, Georgia, 30303. During the public comment period, the proposed consent decree may also be examined on the following Department of Justice Web site, *http://www.usdoj.gov/enrd/open.html.* A copy of the proposed consent decree may be obtained by mail from the Consent Decree Library, P.O. Box 7611, U.S. Department of Justice, Washington, DC 20044–7611 or by faxing or e-mailing a request to Tonia Fleetwood (*tonia.fleetwood@usdoj.gov*), fax no. (202) 514–0097, phone confirmation number (202) 514–1547. In requesting a copy from the Consent Decree Library, please enclose a check in the amount of $5.25 (25 cents per page reproduction cost) payable to the U.S. Treasury.

Henry Friedman,

Assistant Chief, Environmental Enforcement Section, Environmental and Natural Resources Division.

[FR Doc. 06–6808 Filed 8–9–06; 8:45 am]

BILLING CODE 4410–15–M

DEPARTMENT OF LABOR

Employment and Training Administration

[TA–W–59,682]

Bernzomatic, Medina, NY; Notice of Termination of Investigation

Pursuant to Section 221 of the Trade Act of 1974, as amended, an investigation was initiated on July 7, 2006 in response to a worker petition filed by the Rochester Regional Joint Board, *Unite Here,* on behalf of workers of Bernzomatic, Medina, New York.

The petitioner has requested that the petition be withdrawn. Consequently, the investigation has been terminated.

Signed at Washington, DC, this 12th day of July 2006.

Richard Church,

Certifying Officer, Division of Trade Adjustment Assistance.

[FR Doc. E6–13057 Filed 8–9–06; 8:45 am]

BILLING CODE 4510–30–P

DEPARTMENT OF LABOR

Employment and Training Administration

[TA–W–59,240]

Coleman Cable, Inc., Automotive Division, Including On-Site Leased Workers of Future Force, Including On-Site Workers of Future Force Receiving Wages Paid by Crum and Foster, Miami Lakes, FL; Amended Certification Regarding Eligibility to Apply for Worker Adjustment Assistance and Alternative Trade Adjustment Assistance

In accordance with Section 223 of the Trade Act of 1974 (19 U.S.C. 2273), and Section 246 of the Trade Act of 1974 (26 U.S.C. 2813), as amended, the Department of Labor issued a Certification of Eligibility to Apply for Worker Adjustment Assistance and Alternative Trade Adjustment Assistance on May 5, 2006, applicable to workers of Coleman Cable, Inc., Automotive Division, including on-site leased workers of Future Force, Miami Lakes, Florida. The notice was published in the **Federal Register** on May 17, 2006 (71 FR 28709).

At the request of the State agency, the Department reviewed the certification for workers of the subject firm. The workers are engaged in the production of automotive cables and extension cords.

Information provided by a company official shows that Crum and Foster was contracted by the leasing firm, Future Force, to provide payroll function services to workers employed on-site at the Miami Lakes, Florida location of Coleman Cable, Inc., Automotive Division.

Information also shows that all on-site leased workers of Future Force separated from employment at the subject firm had their wages reported under a separate unemployment insurance (UI) tax account for Crum and Foster.

Based on these findings, the Department is amending this certification to include leased workers whose wages were reported by Crum and Foster working on-site at Coleman Cable, Inc., Automotive Division, Miami Lakes, Florida.

The intent of the Department's certification is to include all workers of Coleman Cable, Inc., Automotive Division who was adversely affected by increased company imports.

The amended notice applicable to TA–W–59,240 is hereby issued as follows:

All workers of Coleman Cable, Inc., Automotive Division, including on-site leased workers of Future Force, and on-site Future Force workers who's wages were reported by Crum and Foster, Miami Lakes, Florida, who became totally or partially separated from employment on or after April 18, 2005, through May 5, 2008, are eligible to apply for adjustment assistance under Section 223 of the Trade Act of 1974 and are also eligible to apply for alternative trade adjustment assistance under Section 246 of the Trade Act of 1974.

Signed at Washington, DC, this 26th day of July 2006.

Richard Church,

Certifying Officer, Division of Trade Adjustment Assistance.

[FR Doc. E6–13088 Filed 8–9–06; 8:45 am]

BILLING CODE 4510–30–P

DEPARTMENT OF LABOR

Employment and Training Administration

[TA–W–58,941]

Delphi Connection Systems, Packard Hughes Interconnections, Irvine, CA; Amended Certification Regarding Eligibility to Apply for Worker Adjustment Assistance and Alternative Trade Adjustment Assistance

In accordance with Section 223 of the Trade Act of 1974 (19 U.S.C. 2273), and Section 246 of the Trade Act of 1974 (26 U.S.C. 2813), as amended, the Department of Labor issued a Certification of Eligibility to Apply for Worker Adjustment Assistance and Alternative Trade Adjustment Assistance on March 24, 2006, applicable to workers of Delphi Connection Systems, Irvine, California. The notice was published in the **Federal Register** on April 12, 2006 (71 FR 18772).

At the request of the State agency, the Department reviewed the certification for workers of the subject firm. The workers were engaged in the production of flexible wiring harnesses and connectors for harsh environment.

New information shows that Packard Hughes Interconnect is the parent firm of Delphi Connection Systems. Workers separated from employment at the subject firm had their wages reported under a separate unemployment insurance (UI) tax account for Packard Hughes Interconnect.

Accordingly, the Department is amending the certification to properly reflect this matter.

The intent of the Department's certification is to include all workers of Delphi Connection Systems who were

adversely affected by a shift in production to Mexico.

The amended notice applicable to TA–W–58,941 is hereby issued as follows:

''All workers of Delphi Connection Systems, Packard Hughes Interconnect, Irvine, California, who became totally or partially separated from employment on or after February 27, 2005, through March 24, 2008, are eligible to apply for adjustment assistance under Section 223 of the Trade Act of 1974, and are also eligible to apply for alternative trade adjustment assistance under Section 246 of the Trade Act of 1974.''

Signed at Washington, DC, this 20th day of July 2006.

Linda G. Poole,

Certifying Officer, Division of Trade Adjustment Assistance.

[FR Doc. E6–13086 Filed 8–9–06; 8:45 am]

BILLING CODE 4510–30–P

DEPARTMENT OF LABOR

Employment and Training Administration

[TA–W–59,532]

Hardwick Knitted Fabrics, New York Sales Office, a Subdivision of Hardwick Knitted Fabrics, Inc., New York, NY; Dismissal of Application for Reconsideration

Pursuant to 29 CFR 90.18(C) an application for administrative reconsideration was filed with the Director of the Division of Trade Adjustment Assistance for workers at Hardwick Knitted Fabrics, New York Sales Office, a subdivision of Hardwick Knitted Fabrics, Inc., New York, New York. The application did not contain new information supporting a conclusion that the determination was erroneous, and also did not provide a justification for reconsideration of the determination that was based on either mistaken facts or a misinterpretation of facts or of the law. Therefore, dismissal of the application was issued.

TA–W–59,532; Hardwick Knitted Fabrics, New York Sales Office, a Subdivision of Hardwick Knitted Fabrics, Inc., New York, New York (July 27, 2006).

Signed at Washington, DC, this 31st day of July, 2006.

Richard Church,

Acting Director, Division of Trade Adjustment Assistance.

[FR Doc. E6–13090 Filed 8–9–06; 8:45 am]

BILLING CODE 4510–30–P

DEPARTMENT OF LABOR

Employment and Training Administration

[TA–W–59,654]

House of Perfection, Inc., West Columbia, SC; Notice of Termination of Investigation

Pursuant to Section 221 of the Trade Act of 1974, as amended, an investigation was initiated on June 29, 2006, in response to a petition filed by a company official on behalf of workers of House of Perfection, Inc., West Columbia, South Carolina.

The petition has been deemed invalid because the petition is not dated. Consequently, further investigation would serve no purpose, and the investigation has been terminated.

Signed at Washington, DC, this 13th day of July 2006.

Linda G. Poole,

Certifying Officer, Division of Trade Adjustment Assistance.

[FR Doc. E6–13043 Filed 8–9–06; 8:45 am]

BILLING CODE 4510–30–P

DEPARTMENT OF LABOR

Employment and Training Administration

[TA–W–58,984]

Independent Steel Castings Company, New Buffalo, MI; Dismissal of Application for Reconsideration

Pursuant to 29 CFR 90.18(c) an application for administrative reconsideration was filed with the Director of the Division of Trade Adjustment Assistance for workers at Independent Steel Castings Company, New Buffalo, Michigan. The application did not contain new information supporting a conclusion that the determination was erroneous, and also did not provide a justification for reconsideration of the determination that was based on either mistaken facts or a misinterpretation of facts or of the law. Therefore, dismissal of the application was issued.

TA–W–58,984; Independent Steel Castings Company, New Buffalo, Michigan (July 31, 2006).

Signed at Washington, DC, this 2nd day of August, 2006.

Richard Church,

Acting Director, Division of Trade Adjustment Assistance.

[FR Doc. E6–13091 Filed 8–9–06; 8:45 am]

BILLING CODE 4510–30–P

DEPARTMENT OF LABOR

[TA–W–55,434 and TA–W–55,434a]

Employment and Training Administration

Kent Sporting Goods Company, Inc. New London, OH, Including an Employee Located in Madison, GA; Amended Certification Regarding Eligibility to Apply for Worker Adjustment Assistance and Alternative Trade Adjustment Assistance

In accordance with Section 223 of the Trade Act of 1974 (19 U.S.C. 2273), and Section 246 of the Trade Act of 1974 (26 U.S.C. 2813), as amended, the Department of Labor issued a Certification Regarding Eligibility to Apply for Worker Adjustment Assistance and Alternative Trade Adjustment Assistance on September 8, 2004, applicable to workers of Kent Sporting Goods, New London, Ohio. The notice was published in the **Federal Register** on September 23, 2004 (69 FR 57094).

At the request of the company, the Department reviewed the certification for workers of the subject firm. The workers are engaged in the production of life vests.

The company reports that a worker separation occurred at the Madison, Georgia location of the subject firm where the worker provided telemarketing services for the subject firm's production plant located in New London, Ohio.

Based on these findings, the Department is amending the certification to include the worker of the New London, Ohio facility of Kent Sporting Goods located in Madison, Georgia.

The intent of the Department's certification is to include all workers of Kent Sporting Goods who were adversely affected by increased company imports.

The amended notice applicable to TA–W–55,434 is hereby issued as follows:

All workers of Kent Sporting Goods, New London, Ohio (TA–W–55,434), including an employee of Kent Sporting Goods, New London, Ohio, located in Madison, Georgia (TA–W–55,434A), who became totally or partially separated from employment on or after August 3, 2003, through September 8, 2006, are eligible to apply for adjustment assistance under Section 223 of the Trade Act of 1974, and are also eligible to apply for alternative trade adjustment assistance under Section 246 of the Trade Act of 1974.

Signed in Washington, DC this 27th day of July 2006.

Richard Church,

Certifying Officer, Division of Trade Adjustment Assistance.

[FR Doc. E6–13083 Filed 8–9–06; 8:45 am]

BILLING CODE 4510–30–P

DEPARTMENT OF LABOR

Employment and Training Administration

Investigations Regarding Certifications of Eligibility To Apply for Worker Adjustment Assistance and Alternative Trade Adjustment Assistance

Petitions have been filed with the Secretary of Labor under Section 221(a) of the Trade Act of 1974 (''the Act'') and are identified in the Appendix to this notice. Upon receipt of these petitions, the Director of the Division of Trade Adjustment Assistance, Employment and Training Administration, has instituted investigations pursuant to Section 221(a) of the Act.

The purpose of each of the investigations is to determine whether the workers are eligible to apply for adjustment assistance under Title II, Chapter 2, of the Act. The investigations will further relate, as appropriate, to the determination of the date on which total or partial separations began or threatened to begin and the subdivision of the firm involved.

The petitioners or any other persons showing a substantial interest in the subject matter of the investigations may request a public hearing, provided such request is filed in writing with the Director, Division of Trade Adjustment Assistance, at the address shown below, not later than August 21, 2006.

Interested persons are invited to submit written comments regarding the subject matter of the investigations to the Director, Division of Trade Adjustment Assistance, at the address shown below, not later than August 21, 2006.

The petitions filed in this case are available for inspection at the Office of the Director, Division of Trade Adjustment Assistance, Employment and Training Administration, U.S. Department of Labor, Room C–5311, 200 Constitution Avenue, NW., Washington, DC 20210.

Signed at Washington, DC, this 2nd day of August 2006.

Richard Church,

Acting Director, Division of Trade Adjustment Assistance.

APPENDIX

[TAA petitions instituted between 7/25/06 and 7/28/06]

TA–W	Subject firm (petitioners)	Location	Date of institution	Date of petition
59771	Fred Meyer/Kroger, Inc. (State)	Portland, OR	07/25/06	07/21/06
59772	DuPont Automotive Systems (Comp)	Troy, MI	07/25/06	07/21/06
59773	Euromatic Plastics (Wkrs)	Wilson, NC	07/25/06	07/11/06
59774	Cranston Print Works Company (Union)	Webster, MA	07/25/06	07/20/06
59775	LENA Phillips-Advance Transformer (Comp)	Boscobel, WI	07/25/06	07/20/06
59776	Managed Business Solutions (State)	Colorado Springs, CO	07/25/06	07/24/06
59777	Clarion Technologies, Inc. (Comp)	Greenville, MI	07/25/06	07/05/06
59778	Honeywell Automation and Control Systems (State)	Golden Valley, MN	07/25/06	07/24/06
59779	Crestwoods, Inc. (Comp)	Winchester, NH	07/25/06	07/24/06
59780	Elliott Company (USW)	Jeannette, PA	07/25/06	07/25/06
59781	Morse Automotive (Comp)	Cartersville, GA	07/25/06	07/21/06
59782	MPP (Wkrs)	St. Mary's, PA	07/25/06	07/11/06
59783	Rodman Industries (USW)	Marinette, WI	07/25/06	07/10/06
59784	Johnson Controls, Inc. (JCI) (Union)	West Carrollton, OH	07/25/06	07/13/06
59785	Collins and Aikman (USWA)	Nashville, TN	07/25/06	07/17/06
59786	United Plastics Group, Inc. (Comp)	Anaheim, CA	07/25/06	07/13/06
59787	AGX Corporation (Comp)	New York, NY	07/25/06	06/30/06
59788	Ace Product, LLC (Union)	Newport, TN	07/25/06	07/19/06
59789	Allied Air Enterprises (UAW)	Bellevue, OH	07/25/06	07/16/06
59790	Premier Turbines (Comp)	Neosho, MO	07/25/06	07/24/06
59791	General Motors Corp. (State)	Beaverton, OR	07/26/06	07/25/06
59792	Engineered Plastic Products, Inc. (Comp)	Ypsilanti, MI	07/26/06	07/25/06
59793	Jarvis Pemco (Comp)	Kalamazoo, MI	07/26/06	07/25/06
59794	Darco, Inc. (Comp)	Huntland, TN	07/26/06	07/06/06
59795	Handy and Harman Tube Company (Comp)	Norristown, PA	07/26/06	07/26/06
59796	Universal Structural, Inc. (Union)	Vancouver, WA	07/26/06	07/25/06
59797	Canteen Vending (State)	Hickory, NC	07/27/06	07/26/06
59798	Kwikset Corporation (Comp)	Denison, TX	07/27/06	07/26/06
59799	J.D. Phillips Corporation (Comp)	Alpena, MI	07/27/06	07/25/06
59800A	Delphi Packard Electric System (Union)	Cortland, OH	07/27/06	07/26/06
59800	Delphi Packard Electric System (Union)	Bazetta Township, OH	07/27/06	07/26/06
59800B	Delphi Packard Electric System (Union)	Rootstown, OH	07/27/06	07/26/06
59800C	Delphi Packard Electric System (Union)	Vienna, OH	07/27/06	07/26/06
59800D	Delphi Packard Electric System (Union)	Warren, OH	07/27/06	07/26/06
59801	Shirts by Astro, LLC (Wkrs)	Doyle, TN	07/27/06	07/21/06
59802	New Haven Copper Co., Olin Corporation (State)	Seymour, CT	07/27/06	07/26/06
59803	Irving Tanning Co. (Comp)	Hartland, ME	07/27/06	07/25/06
59804	Carroll Companies, Inc. (Comp)	Boone, NC	07/27/06	07/27/06
59805	Stone Transportation (State)	Dimondale, MI	07/28/06	07/19/06
59806	Securitas (State)	Lansing, MI	07/28/06	07/19/06
59807	Regional Steel Distribution Center (State)	Holt, MI	07/28/06	07/19/06
59808	Quaker Chemical (State)	Detroit, MI	07/28/06	07/19/06
59809	HSS Materials Management Solutions (State)	Lansing, MI	07/28/06	07/19/06
59810	EDS (State)	Lansing, MI	07/28/06	07/19/06

APPENDIX—Continued

[TAA petitions instituted between 7/25/06 and 7/28/06]

TA–W	Subject firm (petitioners)	Location	Date of institution	Date of petition
59811	Comprehensive Logistics (State)	Fowlerville, MI	07/28/06	07/19/06
59812	Canteen (State)	Belmont, MI	07/28/06	07/19/06
59813	Bartech (State)	Grandville, MI	07/28/06	07/19/06
59814	Aerotek (State)	Okemos, MI	07/28/06	07/19/06
59815	Suntron Northeast Operations (Comp)	Lawrence, MA	07/28/06	07/25/06
59816	United Health Group/Ingenix (State)	Eden Prarie, MN	07/28/06	07/27/06
59817	Synthron, Inc. (Comp)	Morganton, NC	07/28/06	07/10/06

[FR Doc. E6–13093 Filed 8–9–06; 8:45 am]

BILLING CODE 4510–30–P

DEPARTMENT OF LABOR

Employment and Training Administration

[TA–W–59,668]

Richard's Apex, Morgantown, PA; Notice of Termination of Investigation

Pursuant to Section 221 of the Trade Act of 1974, an investigation was initiated on July 6, 2006 in response to a petition filed on behalf of workers at Richard's Apex, Morgantown, Pennsylvania.

The petitioners have requested that the petition be withdrawn. Consequently, the investigation has been terminated.

Signed in Washington, DC, this 12th day of July 2006.

Elliot S. Kushner,

Certifying Officer, Division of Trade Adjustment Assistance.

[FR Doc. E6–13056 Filed 8–9–06; 8:45 am]

BILLING CODE 4510–30–P

DEPARTMENT OF LABOR

Employment and Training Administration

[TA–W–59,617]

Rosemount Analytical, Inc., Process Analytic Division, Irvine, CA; Notice of Termination of Investigation

Pursuant to Section 221 of the Trade Act of 1974, as amended, an investigation was initiated on June 23, 2006 in response to a worker petition filed by a company official on behalf of workers at Rosemount Analytical, Inc., Process Analytic Division, Irvine, California.

The petitioner has requested that the petition be withdrawn. Consequently, the investigation has been terminated.

Signed at Washington, DC, this 10th day of July, 2006.

Elliott S. Kushner,

Certifying Officer, Division of Trade Adjustment Assistance.

[FR Doc. E6–13059 Filed 8–9–06; 8:45 am]

BILLING CODE 4510–30–P

DEPARTMENT OF LABOR

Employment and Training Administration

Program Year (PY) 2006 WIA Final Allotments for Adult and Youth Activities and Additional Funds From WIA Section 173(e) for Adult/Dislocated Worker Activities for Eligible States

AGENCY: Employment and Training Administration, Labor.

ACTION: Notice.

SUMMARY: This Notice announces final allotments for PY 2006 (July 1, 2006—June 30, 2007) for the WIA youth and adult programs and additional PY 2006 funding from WIA section 173(e) for eligible states.

The WIA allotments for states are based on provisions defined in the statute. WIA allotments announced in the **Federal Register** on April, 11, 2006, remain unchanged for outlying areas in the adult and youth programs and Native Americans in the youth program.

FOR FURTHER INFORMATION CONTACT: WIA Youth Activities allotments: Haskel Lowery at 202–693–3030 or LaSharn Youngblood at 202–693–3606, and WIA Adult Employment and Training Activities allotments: Raymond Palmer at 202–693–3535 or Stephanie Cabell at 202–693–3171 (these are not toll-free numbers). General information about these training programs may also be found at the Web site: *http://www.doleta.gov.*

SUPPLEMENTARY INFORMATION: This **Federal Register** notice is an update to the planning estimate levels for the WIA youth and adult programs announced in the **Federal Register** on April 11, 2006. In this Notice, the Department of Labor (DOL or Department) is announcing WIA final allotments for PY 2006 (July 1, 2006—June 30, 2007) for Youth Activities and Adult Activities, as well as the additional funding available for eligible states from WIA section 173(e). The allotments are based on the funds appropriated in the Departments of Labor, Health and Human Services, and Education, and Related Agencies Appropriations Act, 2006, Public Law 109–149, December 30, 2005, including the Department of Defense, Emergency Supplemental Appropriations to Address Hurricanes in the Gulf of Mexico, and Pandemic Influenza Act, 2006, Public Law 109–148, Division B, Title III, Chapter 8 (December 30, 2005), which required a government-wide reduction of 1.0 percent to all FY 2006 discretionary programs. Attached are tables displaying the PY 2006 final allotments for WIA Title I Youth Activities (Attachment I) and Adult Activities (Attachment II).

Youth Activities Final Allotments. Total funding for PY 2006 WIA Youth Activities is $940,500,000. Attachment I includes a breakdown of the Youth Activities state final allotments for PY 2006 for all states and outlying areas. In accordance with WIA section 127, before determining the amount available for states, the amount available for the outlying areas was reserved at 0.25 percent, or $2,351,250 of the total amount appropriated for Youth Activities, and 1.5 percent, or $14,107,500, was reserved for Native Americans. Outlying areas and Native Americans youth funding levels remain unchanged from the levels identified in the earlier Notice.

After determining the amount for the outlying areas and Native Americans, the amount available for allotment to the states for PY 2006 is $924,041,250. The three factors required in WIA for the youth program state allotment formula use the following data for the PY 2006 allotments:

(1) Number of unemployed for areas of substantial unemployment (ASUs),

averages for the 12-month period, July 2004 through preliminary June 2005;

(2) Number of excess unemployed individuals or the ASU excess unemployed individuals (depending on which is higher), averages for the same 12-month period used for ASU unemployed data; and

(3) Number of economically disadvantaged youth (age 16 to 21, excluding college students and military), as counted in the 2000 Census.

The computation of final state allotments for the youth program is based on ASU data for the PY 2006 allotments identified by the states under revised guidance issued by the Employment and Training Administration. The **Federal Register** Notice of April 11, 2006, described the background for the revision of the ASU data, which was related to a 2000 Census data processing problem, and announced planning estimates for the youth program.

Since the total amount available for states in PY 2006 is below the required $1 billion threshold specified in WIA section 127(b)(1)(C)(iv)(IV), as it also was in PY 2005, the WIA additional minimum provisions are not applicable. Instead, as required by WIA, the Job Training Partnership Act (JTPA) section 262(a)(3) (as amended by section 701 of the Job Training Reform Amendments of 1992) minimums of 90 percent hold-harmless of the prior year allotment percentage (not dollars) and 0.25 percent state minimum floor are applicable. The planning estimates announced earlier were based on the minimum amounts states are guaranteed under these WIA formula minimum provisions. Now that revised ASU data have been submitted by states and certified by the Bureau of Labor Statistics, final formula allotments for the states for the WIA youth program have been calculated. In the final allotment calculations, some states remain entitled to only the minimum amount, and thus will receive no additional funds above their minimum. States whose revised data generated an amount above their minimum amount will also be entitled to those additional funds.

Adult Employment and Training Activities Final Allotments. The total Adult Employment and Training Activities appropriation is $864,198,640. Attachment II shows the PY 2006 Adult Activities final allotments by state. Like the youth program, the total available for the outlying areas was reserved at 0.25 percent, or $2,160,497 of the full amount appropriated for adults. Outlying areas adult funding levels remain unchanged from the levels identified for the adult program in the earlier **Federal Register** Notice of April 11, 2006. After determining the amount for the outlying areas, the amount available for allotments to the states is $862,038,143. The three factors for the adult program state allotment formula use the same data (including revised ASU data) as used for the youth program formula, except that data for the number of economically disadvantaged adults (age 22 to 72, excluding college students and military) are used.

Since the total amount available for the adult program for states in PY 2006 is below the required $960 million threshold specified in WIA section 132(b)(1)(B)(iv)(IV), as it also was in PY 2005, the WIA additional minimum provisions are not applicable. Instead, as required by WIA, the JTPA section 202(a)(3) (as amended by section 701 of the Job Training Reform Amendments of 1992) minimums of 90 percent hold-harmless of the prior year allotment percentage and 0.25 percent state minimum floor are applicable.

The **Federal Register** Notice of April 11, 2006, announced planning estimates for the WIA adult program, as well as for the youth program. The planning estimates were based on the minimum amounts states are guaranteed under these WIA formula minimum provisions. Now that revised ASU data have been submitted by states and certified by the Bureau of Labor Statistics, final formula allotments for the states for the WIA adult program have been calculated. In the final allotment calculations, some states remain entitled to only the minimum amount, and thus will receive no additional funds above their minimum. States whose revised data generated an amount above their minimum amount will also be entitled to those additional funds.

Additional Funding from WIA Section 173(e) for Adult /Dislocated Worker Activities for Eligible States. WIA section 173(e) provides that up to $15 million from Dislocated Workers reserve funds is to be made available annually to states that receive less funds under the WIA adult formula than they would have received had the JTPA adult formula been in effect. The amount of each eligible state's grant is based on the difference between the WIA and JTPA adult formula allotments; funds are available for grants for up to eight states with the largest difference. The additional funding must be used for adult or dislocated worker activities. In PY 2006, one state is eligible for these additional funds, for a total of $130,477 (Attachment III).

Signed at Washington, DC, this 1st day of August 2006.

Emily Stover DeRocco,

Assistant Secretary for Employment and Training.

BILLING CODE 4510-30-P

Attachment I

U.S. Department of Labor
Employment and Training Administration
WIA Youth Activities State Allotments
Comparison of PY 2006 Final vs PY 2005

State	PY 2005	PY 2006 Final	Difference	% Difference
Total	**$986,288,064**	**$940,500,000**	**($45,788,064)**	**-4.64%**
Alabama	14,738,266	12,648,643	(2,089,623)	-14.18%
Alaska	3,152,259	3,080,409	(71,850)	-2.28%
Arizona	16,638,217	14,717,635	(1,920,582)	-11.54%
Arkansas	9,550,969	8,823,726	(727,243)	-7.61%
California	135,801,478	128,512,805	(7,288,673)	-5.37%
Colorado	13,927,328	11,952,681	(1,974,647)	-14.18%
Connecticut	8,680,992	7,505,056	(1,175,936)	-13.55%
Delaware	2,422,570	2,310,103	(112,467)	-4.64%
District of Columbia	3,215,444	3,986,019	770,575	23.96%
Florida	37,558,049	32,232,987	(5,325,062)	-14.18%
Georgia	18,513,809	17,503,930	(1,009,879)	-5.45%
Hawaii	3,519,843	3,020,792	(499,051)	-14.18%
Idaho	3,353,496	2,878,030	(475,466)	-14.18%
Illinois	45,982,865	46,261,454	278,589	0.61%
Indiana	17,672,429	18,769,283	1,096,854	6.21%
Iowa	5,990,676	5,141,305	(849,371)	-14.18%
Kansas	7,304,197	7,677,603	373,406	5.11%
Kentucky	13,578,712	11,653,493	(1,925,219)	-14.18%
Louisiana	17,531,247	15,045,629	(2,485,618)	-14.18%
Maine	3,328,023	2,856,169	(471,854)	-14.18%
Maryland	10,195,862	9,543,451	(652,411)	-6.40%
Massachusetts	18,460,028	15,842,725	(2,617,303)	-14.18%
Michigan	41,637,699	46,903,258	5,265,559	12.65%
Minnesota	11,133,956	9,555,360	(1,578,596)	-14.18%
Mississippi	11,016,488	13,515,405	2,498,917	22.68%
Missouri	16,705,651	20,650,995	3,945,344	23.62%
Montana	2,664,856	2,497,394	(167,462)	-6.28%
Nebraska	2,836,319	2,715,766	(120,553)	-4.25%
Nevada	4,591,173	3,940,227	(650,946)	-14.18%
New Hampshire	2,422,570	2,310,103	(112,467)	-4.64%
New Jersey	23,078,093	19,806,031	(3,272,062)	-14.18%
New Mexico	7,067,190	6,677,543	(389,647)	-5.51%
New York	71,302,645	63,707,670	(7,594,975)	-10.65%
North Carolina	27,908,443	23,951,523	(3,956,920)	-14.18%
North Dakota	2,422,570	2,310,103	(112,467)	-4.64%
Ohio	40,189,369	44,984,082	4,794,713	11.93%
Oklahoma	10,493,069	9,005,339	(1,487,730)	-14.18%
Oregon	17,262,892	16,115,438	(1,147,454)	-6.65%
Pennsylvania	36,474,957	38,001,974	1,527,017	4.19%
Puerto Rico	35,107,284	30,129,697	(4,977,587)	-14.18%
Rhode Island	3,192,769	2,740,091	(452,678)	-14.18%
South Carolina	16,480,188	18,383,325	1,903,137	11.55%
South Dakota	2,422,570	2,310,103	(112,467)	-4.64%
Tennessee	17,924,008	19,927,151	2,003,143	11.18%
Texas	83,761,726	81,063,738	(2,697,988)	-3.22%
Utah	5,833,065	5,502,739	(330,326)	-5.66%
Vermont	2,422,570	2,310,103	(112,467)	-4.64%
Virginia	12,992,888	11,150,728	(1,842,160)	-14.18%
Washington	25,342,091	21,749,034	(3,593,057)	-14.18%
West Virginia	6,761,270	5,802,642	(958,628)	-14.18%
Wisconsin	14,040,325	12,049,657	(1,990,668)	-14.18%
Wyoming	2,422,570	2,310,103	(112,467)	-4.64%
State Total	**969,028,023**	**924,041,250**	**(44,986,773)**	**-4.64%**
American Samoa	139,173	133,535	(5,638)	-4.05%
Guam	1,132,830	1,086,941	(45,889)	-4.05%
Northern Marianas	344,804	402,222	57,418	16.65%
Palau	99,602	85,480	(14,122)	-14.18%
Virgin Islands	749,311	643,072	(106,239)	-14.18%
Outlying Areas Total	**2,465,720**	**2,351,250**	**(114,470)**	**-4.64%**
Native Americans	**14,794,321**	**14,107,500**	**(686,821)**	**-4.64%**

Attachment II

U.S. Department of Labor
Employment and Training Administration
WIA Adult Activities State Allotments
Comparison of PY 2006 Final vs PY 2005

State	PY 2005 Incl 1% rescission in FY06 Approp	PY 2006 Final	Difference	% Difference
Total	$889,498,144	$864,198,640	($25,299,504)	-2.84%
Alabama	13,976,483	12,221,062	(1,755,421)	-12.56%
Alaska	2,928,229	2,901,894	(26,335)	-0.90%
Arizona	15,470,781	13,871,822	(1,598,959)	-10.34%
Arkansas	8,752,450	8,175,229	(577,221)	-6.59%
California	127,940,795	122,361,159	(5,579,636)	-4.36%
Colorado	10,679,522	10,569,061	(110,461)	-1.03%
Connecticut	7,479,684	6,540,249	(939,435)	-12.56%
Delaware	2,218,186	2,155,095	(63,091)	-2.84%
District of Columbia	2,676,655	3,380,681	704,026	26.30%
Florida	36,876,013	32,244,452	(4,631,561)	-12.56%
Georgia	16,876,580	16,152,634	(723,946)	-4.29%
Hawaii	3,344,868	2,924,759	(420,109)	-12.56%
Idaho	2,801,747	2,449,853	(351,894)	-12.56%
Illinois	41,447,116	42,381,292	934,176	2.25%
Indiana	14,962,328	16,321,034	1,358,706	9.08%
Iowa	4,258,476	3,723,619	(534,857)	-12.56%
Kansas	5,966,710	6,471,301	504,591	8.46%
Kentucky	13,988,108	12,231,227	(1,756,881)	-12.56%
Louisiana	16,502,603	14,429,905	(2,072,698)	-12.56%
Maine	3,069,783	2,684,224	(385,559)	-12.56%
Maryland	9,450,698	8,920,528	(530,170)	-5.61%
Massachusetts	15,298,055	13,376,646	(1,921,409)	-12.56%
Michigan	37,653,540	43,194,015	5,540,475	14.71%
Minnesota	9,227,122	8,068,212	(1,158,910)	-12.56%
Mississippi	9,886,789	12,419,490	2,532,701	25.62%
Missouri	14,965,686	18,858,794	3,893,108	26.01%
Montana	2,561,768	2,397,365	(164,403)	-6.42%
Nebraska	2,218,186	2,155,095	(63,091)	-2.84%
Nevada	4,452,941	3,893,660	(559,281)	-12.56%
New Hampshire	2,218,186	2,155,095	(63,091)	-2.84%
New Jersey	22,409,867	19,595,228	(2,814,639)	-12.56%
New Mexico	6,591,212	6,282,504	(308,708)	-4.68%
New York	68,378,648	61,760,097	(6,618,551)	-9.68%
North Carolina	25,230,742	22,061,806	(3,168,936)	-12.56%
North Dakota	2,218,186	2,155,095	(63,091)	-2.84%
Ohio	36,215,721	41,263,454	5,047,733	13.94%
Oklahoma	9,619,914	8,411,670	(1,208,244)	-12.56%
Oregon	15,752,482	14,938,027	(814,455)	-5.17%
Pennsylvania	32,473,861	34,392,337	1,918,476	5.91%
Puerto Rico	33,557,641	31,646,945	(1,910,696)	-5.69%
Rhode Island	2,552,994	2,232,342	(320,652)	-12.56%
South Carolina	15,112,175	17,085,257	1,973,082	13.06%
South Dakota	2,218,186	2,155,095	(63,091)	-2.84%
Tennessee	17,029,592	19,022,532	1,992,940	11.70%
Texas	76,485,321	74,988,040	(1,497,281)	-1.96%
Utah	4,460,747	4,306,337	(154,410)	-3.46%
Vermont	2,218,186	2,155,095	(63,091)	-2.84%
Virginia	11,541,716	10,092,097	(1,449,619)	-12.56%
Washington	22,810,203	19,945,283	(2,864,920)	-12.56%
West Virginia	6,486,348	5,671,674	(814,674)	-12.56%
Wisconsin	11,542,384	10,092,681	(1,449,703)	-12.56%
Wyoming	2,218,186	2,155,095	(63,091)	-2.84%
State Total	887,274,400	862,038,143	(25,236,257)	-2.84%
American Samoa	121,131	113,735	(7,396)	-6.11%
Guam	850,600	925,771	75,171	8.84%
Northern Marianas	361,795	342,582	(19,213)	-5.31%
Palau	102,544	89,665	(12,879)	-12.56%
Virgin Islands	787,674	688,744	(98,930)	-12.56%
Outlying Areas Total	2,223,744	2,160,497	(63,247)	-2.84%

Attachment III

U.S. Department of Labor
Employment and Training Administration

Additional PY 2006 Funding from Dislocated Worker National Emergency Reserve for Adult/Dislocated Worker Activities for Eligible States

** Per WIA Sec. 173(e): Up to $15 million from Dislocated Workers Emergency reserve is to be made available to not more than 8 States with the largest ratio of JTPA formula amount above the WIA formula amount.*

State	WIA Calculation	JTPA Calculation	JTPA less WIA	JTPA less Quotient	Eligible * States	Additional $*
Total	**$862,038,143**	**$861,907,735**	**($130,408)**		**1**	**$130,477**
Alabama	12,221,062	12,219,213	(1,849)	99.9849%		
Alaska	2,901,894	2,900,852	(1,042)	99.9641%		
Arizona	13,871,822	13,866,842	(4,980)	99.9641%		
Arkansas	8,175,229	8,172,295	(2,934)	99.9641%		
California	122,361,159	122,317,234	(43,925)	99.9641%		
Colorado	10,569,061	10,565,266	(3,795)	99.9641%		
Connecticut	6,540,249	6,539,260	(989)	99.9849%		
Delaware	2,155,095	2,154,769	(326)	99.9849%		
District of Columbia	3,380,681	3,511,158	130,477	103.8595%	1	130,477
Florida	32,244,452	32,239,575	(4,877)	99.9849%		
Georgia	16,152,634	16,146,836	(5,798)	99.9641%		
Hawaii	2,924,759	2,924,316	(443)	99.9849%		
Idaho	2,449,853	2,449,482	(371)	99.9849%		
Illinois	42,381,292	42,366,078	(15,214)	99.9641%		
Indiana	16,321,034	16,315,176	(5,858)	99.9641%		
Iowa	3,723,619	3,723,056	(563)	99.9849%		
Kansas	6,471,301	6,468,978	(2,323)	99.9641%		
Kentucky	12,231,227	12,229,376	(1,851)	99.9849%		
Louisiana	14,429,905	14,427,723	(2,182)	99.9849%		
Maine	2,684,224	2,683,818	(406)	99.9849%		
Maryland	8,920,528	8,917,327	(3,201)	99.9641%		
Massachusetts	13,376,646	13,374,623	(2,023)	99.9849%		
Michigan	43,194,015	43,178,510	(15,505)	99.9641%		
Minnesota	8,068,212	8,066,992	(1,220)	99.9849%		
Mississippi	12,419,490	12,415,031	(4,459)	99.9641%		
Missouri	18,858,794	18,852,024	(6,770)	99.9641%		
Montana	2,397,365	2,396,504	(861)	99.9641%		
Nebraska	2,155,095	2,154,769	(326)	99.9849%		
Nevada	3,893,660	3,893,071	(589)	99.9849%		
New Hampshire	2,155,095	2,154,769	(326)	99.9849%		
New Jersey	19,595,228	19,592,264	(2,964)	99.9849%		
New Mexico	6,282,504	6,280,249	(2,255)	99.9641%		
New York	61,760,097	61,737,926	(22,171)	99.9641%		
North Carolina	22,061,806	22,058,469	(3,337)	99.9849%		
North Dakota	2,155,095	2,154,769	(326)	99.9849%		
Ohio	41,263,454	41,248,641	(14,813)	99.9641%		
Oklahoma	8,411,670	8,410,398	(1,272)	99.9849%		
Oregon	14,938,027	14,932,665	(5,362)	99.9641%		
Pennylvania	34,392,337	34,379,990	(12,347)	99.9641%		
Puerto Rico	31,646,945	31,635,584	(11,361)	99.9641%		
Rhode Island	2,232,342	2,232,004	(338)	99.9849%		
South Carolina	17,085,257	17,079,124	(6,133)	99.9641%		
South Dakota	2,155,095	2,154,769	(326)	99.9849%		
Tennessee	19,022,532	19,015,703	(6,829)	99.9641%		
Texas	74,988,040	74,961,121	(26,919)	99.9641%		
Utah	4,306,337	4,304,791	(1,546)	99.9641%		
Vermont	2,155,095	2,154,769	(326)	99.9849%		
Virginia	10,092,097	10,090,571	(1,526)	99.9849%		
Washington	19,945,283	19,942,266	(3,017)	99.9849%		
West Virginia	5,671,674	5,670,816	(858)	99.9849%		
Wisconsin	10,092,681	10,091,154	(1,527)	99.9849%		
Wyoming	2,155,095	2,154,769	(326)	99.9849%		

[FR Doc. 06–6849 Filed 8–9–06; 8:45 am]

BILLING CODE 4510–30–C

LEGAL SERVICES CORPORATION

Request for Comments—LSC Budget Request for FY 2008

AGENCY: Legal Services Corporation.

ACTION: Request for comments—LSC budget request for FY 2008.

SUMMARY: The Legal Services Corporation is beginning the process of developing its FY 2008 budget request to Congress and is soliciting suggestions as to what the request should be.

DATES: Written comments must be received on or before September 1, 2006.

ADDRESSES: Written comments may be submitted by mail, fax or e-mail to Charles Jeffress, Chief Administrative Officer, Legal Services Corporation, 3333 K St., NW., Washington, DC 20007; 202–295–1630 (phone); 202–337–6386 (fax); *cjeffress@lsc.gov*.

FOR FURTHER INFORMATION CONTACT: Charles Jeffress, Chief Administrative Officer, Legal Services Corporation, 3333 K St., NW., Washington, DC 20007; 202–295–1630 (phone); 202–337–6386 (fax); *cjeffress@lsc.gov*.

SUPPLEMENTARY INFORMATION: The Legal Services Corporation's (LSC) mission is to promote equal access to justice in our Nation and to provide for high-quality civil legal assistance to low income persons. LSC submits an annual budget request directly to Congress and receives an annual direct appropriation to carry out its mission. For the current fiscal year (FY 2006), LSC received an appropriation of $326,577,984 of which $308,385,346 was for basic field programs; $2,506,572 was for the Office of Inspector General; $12,661,199 was for management and administration; $1,238,971 was for technology initiative grants; and $1,785,896 was for grants to offset losses due to census adjustments. Public Law 109–108, 119 Stat. 2290. (The FY 2007 budget request has already been submitted to Congress and LSC is awaiting Congressional action.)

As part of its annual budget and appropriation process, LSC notifies the Office of Management and Budget (OMB) as to what the LSC budget request to Congress will be for the next fiscal year. OMB requests this information by October 15 of each year. Accordingly, LSC is currently in the process of formulating its FY 2008 budget request.

LSC invites public comment on what its FY 2008 budget request should be. Interested parties may submit comments to LSC by September 1, 2006. More information about LSC can be found at LSC's Web site: *http://www.lsc.gov*

Dated: August 1, 2006.

Victor M. Fortuno,

Vice President and General Counsel.

[FR Doc. E6–13108 Filed 8–9–06; 8:45 am]

BILLING CODE 7050–01–P

NATIONAL AERONAUTICS AND SPACE ADMINISTRATION

[Notice (06–050)]

Privacy Act of 1974; Privacy Act System of Records

AGENCY: National Aeronautics And Space Administration (NASA).

ACTION: Notice of proposed revisions to an existing Privacy Act system of records.

SUMMARY: The National Aeronautics and Space Administration proposes to revise an existing system of records titled ''Security Records System'' (NASA 10SECR), last published on December 13, 1999, (64 FR 69556).

This system of records is being revised to describe the additional types of information being collected by NASA required by Homeland Security Presidential Directive 12 (Policy for a Common Identification Standard for Federal Employees and Contractors) and FIPS 201 (Personal Identity Verification (PIV) of Federal Employees and Contractors). Additionally, this system of records is being revised to reflect that NASA now collects and maintains emergency contact information for employees and contractors in order for notification of an employee or contractor's next-of-kin in the event of a mishap involving the individual.

The purposes of this system of records are to:

1. Document security violations and supervisory actions taken.
2. Ensure the safety and security of NASA facilities, systems, or information, and Agency occupants and users.
3. Notify an employee's next-of-kin or contractor in the event of a mishap involving the NASA or contractor employee.
4. Complete the NASA identity proofing and registration process.
5. Create data records in the Personal Identity Verification (PIV) Identity Management System (IDMS).
6. Issue PIV cards to verify that individuals entering Federal facilities, using Federal information resources, or accessing classified information are authorized to do so.
7. Track and control issued PIV cards.

DATES: Submit comments September 11, 2006.

ADDRESSES: Patti F. Stockman, Privacy Act Officer, Office of the Chief Information Officer, National Aeronautics and Space Administration Headquarters, Washington, DC 20546–0001, (202) 358–4787, *NASA–PAOfficer@nasa.gov*.

FOR FURTHER INFORMATION CONTACT: NASA Privacy Act Officer, Patti F. Stockman, (202) 358–4787, *NASA–PAOfficer@nasa.gov*.

SUPPLEMENTARY INFORMATION: This publication is in accordance with the Privacy Act requirement that agencies publish their amended systems of records in the **Federal Register** when there is a revision, change, or addition. NASA's Office of Security and Program Protection (OSPP) has reviewed its systems of records notices and has determined that its record system, Security Records System (NASA 10SECR), must be revised to incorporate the changes described herein.

NASA 10 SECR

SYSTEM NAME:

Security Records System.

SECURITY CLASSIFICATION:

None.

SYSTEM LOCATION:

Locations 1 through 9 and Locations 11, 12, and 14 as set forth in Appendix A.

CATEGORIES OF INDIVIDUALS COVERED BY THE SYSTEM:

Civil Servant Employees, applicants, NASA committee members, NASA consultants, NASA experts, NASA Resident Research Associates, guest workers, contractor employees, detailees, visitors, correspondents (written and telephonic), Faculty Fellows, Intergovernmental Personnel Mobility Act (IPA) Employees, Grantees, Cooperative Employees, and Remote Users of NASA Non-Public Information Technology Resources.

CATEGORIES OF RECORDS IN THE SYSTEM:

Personnel Security Records, Personal Identity Records, Emergency Data Records, Criminal Matters, and Traffic Management. Specific records fields include, but are not limited to: Name, former names, date of birth, place of birth, social security number, home address, phone numbers, citizenship, traffic infraction, security violation, security incident, security violation discipline status and action taken.

AUTHORITY FOR MAINTENANCE OF THE SYSTEM:

42 U.S.C. 2451, *et seq.*, the National Aeronautics and Space Act of 1958, as amended; Espionage and Information Control Statutes, 18 U.S.C. 793–799; Sabotage Statutes, 18 U.S.C. 2151–2157; Conspiracy Statute, 18 U.S.C. 371; 18 U.S.C. 202–208, 3056; Internal Security Act of 1950; Atomic Energy Act of 1954, as amended; Executive Order 12958, as amended, Classified National Security Information; Executive Order 12968, as amended, Access to Classified Information; Executive Order 10865, Safeguarding Classified Information Within Industry; Executive Order 10450, Security Requirements for Government Employees; Pub. L. 81–733; Pub. L. 107–347, Federal Information Security Management Act 2002; 41 CFR Chapter 101; 14 CFR Part 1203; and 44 U.S.C. 3101; Homeland Security Presidential Directive (HSPD) 12, Policy for a Common Identification Standard for Federal Employees and Contractors, August 27, 2004.

ROUTINE USES OF RECORDS MAINTAINED IN THE SYSTEM, INCLUDING CATEGORIES OF USERS AND THE PURPOSES OF SUCH USES:

Any disclosures of information will be compatible with the purpose for which the Agency collected the information. The records and information in these records may be disclosed to:

1. To the Department of Justice when: (a) The agency or any component thereof; or (b) any employee of the agency in his or her official capacity; (c) any employee of the agency in his or her individual capacity where agency or the Department of Justice has agreed to represent the employee; or (d) the United States Government, is a party to litigation or has an interest in such litigation, and by careful review, the agency determines that the records are both relevant and necessary to the litigation and the use of such records by DOJ is therefore deemed by the agency to be for a purpose compatible with the purpose for which the agency collected the records.

2. To a court or adjudicative body in a proceeding when: (a) The agency or any component thereof; (b) any employee of the agency in his or her official capacity; (c) any employee of the agency in his or her individual capacity where agency or the Department of Justice has agreed to represent the employee; or (d) the United States Government, is a party to litigation or has an interest in such litigation, and by careful review, the agency determines that the records are both relevant and necessary to the litigation and the use of such records is therefore deemed by the agency to be for a purpose that is compatible with the purpose for which the agency collected the records.

3. To an Agency in order to provide a basis for determining preliminary visa eligibility.

4. To a Member of Congress or to a Congressional staff member in response to an inquiry of the Congressional office made at the written request of the constituent about whom the record is maintained.

5. To a staff member of the Executive Office of the President in response to an inquiry from the White House.

6. To the National Archives and Records Administration or to the General Services Administration for records management inspections conducted under 44 U.S.C. §§ 2904 and 2906.

7. To agency contractors, grantees, or volunteers who have been engaged to assist the agency in the performance of a contract service, grant, cooperative agreement, or other activity related to this system of records and who need to have access to the records in order to perform their activity. Recipients shall be required to comply with the requirements of the Privacy Act of 1974, as amended, 5 U.S.C. § 552a.

8. To other Federal agencies and relevant contractor facilities to determine eligibility of individuals to access classified National Security information.

9. To any official investigative or judicial source from which information is requested in the course of an investigation, to the extent necessary to identify the individual, inform the source of the nature and purpose of the investigation, and to identify the type of information requested.

10. To the news media or the general public, factual information the disclosure of which would be in the public interest and which would not constitute an unwarranted invasion of personal privacy, consistent with Freedom of Information Act standards.

11. To a Federal State, or local agency, or other appropriate entities or individuals, or through established liaison channels to selected foreign governments, in order to enable an intelligence agency to carry out its responsibilities under the National Security Act of 1947 as amended, the CIA Act of 1949 as amended, Executive Order 12333 or any successor order, applicable national security directives, or classified implementing procedures approved by the Attorney General and promulgated pursuant to such statutes, orders or directives.

12. In order to notify an employee's next-of-kin or contractor in the event of a mishap involving that employee or contractor.

13. To notify another Federal agency when, or verify whether, a PIV card is no longer valid.

14. To provide relevant information to an internal or external organization or element thereof conducting audit activities of a NASA contractor or subcontractor.

15. Disclosure to a NASA contractor, subcontractor, grantee, or other Government organization information developed in an investigation or administrative inquiry concerning a violation of a Federal or state statute or regulation on the part of an officer or employee of the contractor, subcontractor, grantee, or other Government organization.

16. Standard routine uses 1 through 4 inclusive as set forth in Appendix B.

POLICIES AND PRACTICES FOR STORING, RETRIEVING, ACCESSING, RETAINING, AND DISPOSING OF RECORDS IN THE SYSTEM:

STORAGE:

Electronic media and hard-copy documents.

RETRIEVABILITY:

Records are indexed by individual's name, file number, badge number, decal number, payroll number, Agency-specific unique personal identification code, and/or Social Security Number.

SAFEGUARDS:

Access to system records is controlled by either Government personnel or selected personnel of NASA contractor guard/security force and contractor personnel. After presenting proper identification and requesting a file or record, a person with an official need to know and, if appropriate, a proper clearance may have access to a file or records only after it has been retrieved and approved for release by a NASA security representative. These records are secured in security storage equipment, and/or information technology systems employing security countermeasures.

RETENTION AND DISPOSAL:

The Personnel Security Records are maintained in Agency files and destroyed upon notification of the death or within 5 years after separation or transfer of employee or within 5 years after contract relationship expires, whichever is applicable in accordance with NASA Records Retention Schedules, Schedule 1 Item 103.

The Personal Identity Records are maintained in Agency files and destroyed upon notification of the death or within 5 years after separation or

transfer of employee or within 5 years after contract relationship expires, whichever is applicable in accordance with NASA Records Retention Schedules, Schedule 1 Item 103.

The Emergency Data Records are maintained in Agency files and destroyed when no longer needed in accordance with General Records Schedule 18, Item 22a.

The Criminal Matter Records are maintained in Agency files and destroyed when 8 years old in accordance with NASA Records Retention Schedules, Schedule 2 Item 4B2.

The Traffic Management Records are maintained in Agency files and destroyed upon transfer or separation of permit holder or when permit is superseded or revoked whichever is sooner in accordance with NASA Records Retention Schedules, Schedule 6 Item 11B.

SYSTEM MANAGER(S) AND ADDRESS:

Director, Security Management Division, Location 1.

Subsystem Managers: Chief, Protective Services Division, Location 2; Chief, Security Branch, Locations 4 and 5; Security Officer, Location 3, 8, and 11; Chief, Protective Services Office, Location 6; Head, Office of Security and Public Safety, Location 7; Chief, Security Division, Location 9; Chief, Administration Office, Location 12; Safety and Security Officer at Location 14. Locations are as set forth in Appendix A.

NOTIFICATION PROCEDURE:

Information may be obtained from the cognizant system or subsystem manager listed above. Requests must contain the following identifying data concerning the requestor: First, middle, and last name; date of birth; Social Security Number; period and place of employment with NASA, if applicable.

RECORD ACCESS PROCEDURES:

Personnel Security Records compiled solely for the purpose of determining suitability, eligibility, or qualifications for Federal civilian employment, Federal contracts, or access to classified information have been exempted by the Administrator under 5 U.S.C. 552a(k)(5) from the access provisions of the Act.

Personal Identity Records: Requests from individuals should be addressed to the same address as stated in the Notification section above.

Emergency Data Records: Requests from individuals should be addressed to the same address as stated in the Notification section above.

Criminal Matter Records compiled for civil or criminal law enforcement purposes have been exempted by the Administrator under 5 U.S.C. 552a(k)(2) from the access provision of the Act.

Traffic Management Records: Requests from individuals should be addressed to the same address as stated in the Notification section above.

CONTESTING RECORD PROCEDURES:

For Personnel Security Records and Criminal Matters Records, see Record Access Procedures, above. For Personal Identity Records, Emergency Data Records, and Traffic Management Records, the NASA rules for access to records and for contesting contents and appealing initial determinations by the individual concerned appear at 14 CFR part 1212.

RECORD SOURCE CATEGORIES:

Information is obtained from a variety of sources including the employee, contractor, or applicant via use of the Standard Form (SF) SF–85, SF–85P, or SF–86 and personal interviews; employers' and former employers' records; FBI criminal history records and other databases; financial institutions and credit reports; medical records and health care providers; educational institutions; interviews of witnesses such as neighbors, friends, co-workers, business associates, teachers, landlords, or family members; tax records; and other public records. Security violation information is obtained from a variety of sources, such as guard reports, security inspections, witnesses, supervisor's reports, audit reports.

Exemptions Claimed for the System: Personnel Security Records compiled solely for the purpose of determining suitability, eligibility, or qualifications for Federal civilian employment, Federal contracts, or access to classified information, but only to the extent that the disclosure of such material would reveal the identity of a confidential source, are exempt from the following sections of the Privacy Act of 1974, 5 U.S.C. 552a(c)(3) relating to access to the disclosure accounting; (d) relating to access to the records; (e)(1) relating to the type of information maintained in the records; (e)(4)(G), (H) and (I) relating to publishing in the annual system notice information as to agency procedures for access and correction and information as to the categories of sources of records; and (f) relating to developing agency rules for gaining access and making corrections. The determination to exempt the Personnel Security Records portion of the Security Records System has been made by the Administrator of NASA in accordance with 5 U.S.C. 552a(k)(5) and Subpart 5 of the NASA regulations appearing in 14 CFR part 1212.

Criminal Matter Records to the extent they constitute investigatory material compiled for law enforcement purposes are exempt from the following sections of the Privacy Act of 1974, 5 U.S.C. 552a(c)(3) relating to access to the disclosure accounting; (d) relating to access to the records; (e)(1) relating to the type of information maintained in the records; (e)(4)(G), (H) and (I) relating to publishing in the annual system notice information as to agency procedures for access and correction and information as to the categories of sources of records; and (f) relating to developing agency rules for gaining access and making corrections. The determination to exempt the Criminal Matter Records portion of the Security Records System has been made by the Administrator of NASA in accordance with 5 U.S.C. 552a(k)(2) and subpart 5 of the NASA regulations appearing in 14 CFR part 1212.

Records subject to the provisions of 5 U.S.C. 552(b)(1) required by Executive Order to be kept secret in the interest of national defense or foreign policy are exempt from the following sections of the Privacy Act of 1974, 5 U.S.C. 552a:(c)(3) relating to access to the disclosure accounting; (d) relating to the access to the records; (e)(1) relating to the type of information maintained in the records; (e)(4)(G), (H) and (I) relating to publishing in the annual system notice information as to agency procedures for access and correction and information as to the categories of sources of records; and (f) relating to developing agency rules for gaining access and making corrections.

The determination to exempt this portion of the Security Records System has been made by the Administrator of NASA in accordance with 5 U.S.C. 552a(k)(1) and subpart 5 of the NASA regulations appearing in 14 CFR part 1212.

John W. McManus,

Acting Chief Information Officer.

Appendix A—Location Numbers and Mailing Addresses of NASA Installations at Which Records Are Located

Location 1

NASA Headquarters, National Aeronautics and Space Administration, Washington, DC 20546–0001.

Location 2

Ames Research Center, National Aeronautics and Space Administration, Moffett Field, CA 94035–1000.

Location 3

Dryden Flight Research Center, National Aeronautics and Space Administration, PO Box 273, Edwards, CA 93523–0273.

Location 4

Goddard Space Flight Center, National Aeronautics and Space Administration, Greenbelt, MD 20771–0001.

Location 5

Lyndon B. Johnson Space Center, National Aeronautics and Space Administration, Houston, TX 77058–3696.

Location 6

John F. Kennedy Space Center, National Aeronautics and Space Administration, Kennedy Space Center, FL 32899–0001.

Location 7

Langley Research Center, National Aeronautics and Space Administration, Hampton, VA 23681–2199.

Location 8

John H. Glenn Research Center at Lewis Field, National Aeronautics and Space Administration, 21000 Brookpark Road, Cleveland, OH 44135–3191.

Location 9

George C. Marshall Space Flight Center, National Aeronautics and Space Administration, Marshall Space Flight Center, AL 35812–0001.

Location 10

HQ NASA Management Office-JPL, National Aeronautics and Space Administration, 4800 Oak Grove Drive, Pasadena, CA 91109–8099.

Location 11

John C. Stennis Space Center, National Aeronautics and Space Administration, Stennis Space Center, MS 39529–6000.

Location 12

JSC White Sands Test Facility, National Aeronautics and Space Administration, PO Drawer MM, Las Cruces, NM 88004–0020.

Location 13

GRC Plum Brook Station, National Aeronautics and Space Administration, Sandusky, OH 44870.

Location 14

MSFC Michoud Assembly Facility, National Aeronautics and Space Administration, PO Box 29300, New Orleans, LA 70189.

Location 15

NASA Independent Verification and Validation Facility (NASA IV&V), 100 University Drive, Fairmont, WV 26554.

Location 16

Edison Post of Duty, c/o DCIS, PO 1054, Edison, NJ 08818.

Location 17

Western Field Office, Glenn Anderson Federal Building, 501 West Ocean Blvd., Long Beach, CA 90802–4222.

Appendix B—Standard Routine Uses—NASA

The following routine uses of information contained in SORs, subject to the Privacy Act of 1974, are standard for many NASA systems. They are cited by reference in the paragraph ''Routine uses of records maintained in the system, including categories of users and the purpose of such uses'' of the **Federal Register** Notice on those systems to which they apply.

Standard Routine Use No. 1—Law Enforcement—In the event this system of records indicates a violation or potential violation of law, whether civil, criminal, or regulatory in nature, and whether arising by general statute or particular program statute, or by regulation, rule or order issued pursuant thereto, the relevant records in the SOR may be referred, as a routine use, to the appropriate agency, whether Federal, State, local or foreign, charged with the responsibility of investigating or prosecuting such violation or charged with enforcing or implementing the statute, or rule, regulation or order issued pursuant thereto.

Standard Routine Use No. 2—Disclosure When Requesting Information—A record from this SOR may be disclosed as a ''routine use'' to a Federal, State, or local agency maintaining civil, criminal, or other relevant enforcement information or other pertinent information, such as current licenses, if necessary to obtain information relevant to an agency decision concerning the hiring or retention of an employee, the issuance of a security clearance, the letting of a contract, or the issuance of a license, grant, or other benefit.

Standard Routine Use No. 3—Disclosure of Requested Information—A record from this SOR may be disclosed to a Federal agency, in response to its request, in connection with the hiring or retention of an employee, the issuance of a security clearance, the reporting of an investigation of an employee, the letting of a contract, or the issuance of a license, grant, or other benefit by the requesting agency, to the extent that the information is relevant and necessary to the requesting agency's decision on the matter.

Standard Routine Use No. 4—Court or Other Formal Proceedings—In the event there is a pending court or formal administrative proceeding, any records that are relevant to the proceeding may be disclosed to the Department of Justice or other agency for purposes of representing the Government, or in the course of presenting evidence, or they may be produced to parties or counsel involved in the proceeding in the course of pretrial discovery.

[FR Doc. E6–13009 Filed 8–9–06; 8:45 am]

BILLING CODE 7510–13–P

NATIONAL SCIENCE FOUNDATION

President's Committee on the National Medal of Science; Notice of Meeting

In accordance with the Federal Advisory Committee Act (Pub. L. 92–463, as amended), the National Science Foundation announces the following meeting:

Name: President's Committee on the National Medal of Science (1182).

Date and Time: Monday, October 2, 2006, 8:30 a.m.—1:30 p.m.

Place: Room 1235, National Science Foundation, 4201 Wilson Blvd, Arlington, VA.

Type of Meeting: Closed.

Contact Person: Ms. Mayra Montrose, Program Manager, Room 1282, National Science Foundation, 4201 Wilson Blvd., Arlington, VA 22230. Telephone: 703–292–4757.

Purpose of Meeting: To provide advice and recommendations to the President in the selection of the 2006 National Medal of Science recipients.

Agenda: To review and evaluate nominations as part of the selection process for awards.

Reason for Closing: The nominations being reviewed include information of a personal nature where disclosure would constitute unwarranted invasions of personal privacy. These matters are exempt under 5 U.S.C. 552b(c)(6) of the Government in the Sunshine Act.

Dated: August 8, 2006.

Susanne Bolton,

Committee Management Officer.

[FR Doc. 06–6857 Filed 8–8–06; 12:49 pm]

BILLING CODE 7555–01–M

NUCLEAR REGULATORY COMMISSION

[Docket No. 40–3392]

Notice of Availability of Environmental Assessment and Finding of No Significant Impact for Renewal of the Operating License for the Honeywell Metropolis Works Uranium Conversion Facility in Metropolis, IL

AGENCY: Nuclear Regulatory Commission.

ACTION: Notice of availability.

FOR FURTHER INFORMATION CONTACT: Michael G. Raddatz, Project Manager, Fuel Cycle Facilities Branch, Division of Fuel Cycle Safety and Safeguards, Office of Nuclear Material Safety and Safeguards, U.S. Nuclear Regulatory Commission, Washington, DC 20555. Telephone: (301) 415–6334; fax number: (301) 415–5955; e-mail: *mgr@nrc.gov*.

SUPPLEMENTARY INFORMATION:

I. Introduction

The U.S. Nuclear Regulatory Commission (NRC) proposes to issue a license amendment to Source Materials License No. SUB–526, held by Honeywell International, Inc. (Honeywell), to approve the renewal of its operating license to operate a

Uranium Conversion Facility at the Metropolis Works Uranium Conversion Facility (MTW) in Metropolis, Illinois. The NRC has prepared an Environmental Assessment (EA) in support of this amendment in accordance with the requirements of 10 CFR Part 51. Based on the EA, the NRC has concluded that a Finding of No Significant Impact (FONSI) is appropriate. The amendment will be issued following the publication of this Notice.

II. EA Summary

By letter dated May 27, 2005, Honeywell submitted an application to renew the Source Materials License, SUB–526, for the MTW uranium hexafluoride (UF6) facility near Metropolis, Illinois, for a period of 10 years. At the MTW facility, uranium conversion services have been performed for the commercial nuclear power industry since it was originally licensed by the U.S. Atomic Energy Commission in 1958. The current license was issued by NRC in June 1995 for a 10-year period. The original licensee, AlliedSignal, Inc., has merged with Honeywell, since the time of the last renewal, and the facility's license has been transferred to Honeywell.

NRC staff has prepared this EA pursuant to Council on Environmental Quality regulations (40 CFR Parts 1500–1508), NRC regulations (10 CFR Part 51) which implement the requirements of the National Environmental Policy Act of 1969, and applicable guidance from NUREG–1748, Environmental Review Guidance for Licensing Actions Associated with Nuclear Material Safety and Safeguards Programs. The purpose of this EA is to assess the environmental impacts (radiological and non-radiological) of the proposed license renewal for this facility. The format and methodology employed for this EA are consistent with those for the EA that assessed the last license renewal for this facility in 1995; this assessment reflects regulatory changes and operational and environmental experience obtained during the most recent 10 years of facility operation.

The environmental impacts of the proposed action have been evaluated in accordance with the requirements presented in 10 CFR Part 51. NRC staff has determined that the renewal of license SUB–526 allowing continued Honeywell operations at the MTW facility will not have a significant impact on the human environment.

III. Finding of No Significant Impact

On the basis of the EA, NRC has concluded that there are no significant environmental impacts from the proposed amendment and NRC staff has determined not to prepare an environmental impact statement.

IV. Further Information

Documents related to this action, including the application for the renewal and supporting documentation, are available electronically at NRC's Electronic Reading Room at *http://www.nrc.gov/reading-rm/adams.html*. From this site, you can access NRC's Agencywide Documents Access and Management System (ADAMS), which provides text and image files of NRC's public documents. The ADAMS accession numbers for the documents related to this notice are as follows:

Document	ADAMS accession No.	Date
Final Environmental Assessment for Renewal of NRC License No. SUB–526 for the Honeywell Specialty Materials Metropolis Work Facility.	ML061780260	June 30, 2006.
Notification for Exceeding Nearest Resident Concentration, License No.: SUB–526, Docket No.: 40–03392. Letter to U.S. Nuclear Regulatory Commission Document Control Desk. Metropolis, Illinois: Honeywell Specialty Chemicals.	ML012000117	July 13, 2001.
30-day written report to NRC per license requirement for exceeding effluent administration limit associated with the UF6 release on 12–22–03. Letter to U.S. Nuclear Regulatory Commission Document Control Desk.	ML040260290	January 20, 2004.
Renewal of U.S. NRC Source Materials License. Letter (May 27) to Michael Raddatz, NRC, Office of Nuclear Material Safety and Safeguards.	ML052310382	May 27, 2005.
Environmental Report, Renewal of Source Material License SUB–526, Docket 40–3392, for HONEYWELL SPECIALTY MATERIALS, Metropolis Works (MTW) Metropolis, Illinois.	ML052310401	May 25, 2005.
Honeywell Metropolis Works Safety Demonstration Report for Source Material License SUB–526. Metropolis, Illinois: Honeywell Specialty Materials.	ML052310387	May 27, 2005.
Response to requests for additional information for the Honeywell Metropolis Works license renewal application. Letter to Mr. Michael G. Raddatz, NRC, Office of Nuclear Material Safety and Safeguards.	ML060530490	May 27, 2005.
Response to requests for additional information for the Honeywell Metropolis Works license renewal application and environmental report. Letter to Mr. Michael G. Raddatz, NRC, Office of Nuclear Material Safety and Safeguards.	ML060530491	Oct. 21, 2005.
Provides additional information requested during NRC site visit to the Honeywell Metropolis Works facility in support of the license renewal environmental review. Letter to Mr. Michael G. Raddatz, NRC, Office of Nuclear Material Safety and Safeguards.	ML060540413	Jan. 15, 2006.
Provides additional information required to complete review of radiological dose assessment. E-mail from J. Tortorelli to Michael Raddatz, NRC, Office of Nuclear Material Safety and Safeguards.	ML060970153	Mar. 28, 2006.
IEMA (Illinois Emergency Management Agency), 2006. *Documents completion of review of the draft Honeywell Environmental Assessment.* Letter to Ms. B. Jennifer Davis, NRC. Springfield, Illinois.	ML061780124	June 13, 2006.
NUREG–1748, "Environmental Review Guidance for Licensing Actions Associated With NMSS Programs—Final Report," Nuclear Regulatory Commission, Washington, DC.	ML031000403	April 10, 2003.

If you do not have access to ADAMS, or if there are problems in accessing the documents located in ADAMS, contact the NRC's Public Document Room (PDR) Reference staff at 1–800–397–4209, 301–415–4737, or by e-mail to *pdr@nrc.gov*.

These documents may also be viewed electronically on the public computers located at the NRC's PDR, O1 F21, One White Flint North, 11555 Rockville Pike, Rockville, MD 20852. The PDR reproduction contractor will copy documents for a fee.

Dated at Rockville, Maryland, this 4th day of August, 2006.

For the Nuclear Regulatory Commission.

Gary S. Janosko,

Chief Fuel Cycle Facilities Branch, Division of Fuel Cycle Safety and Safeguards, Office of Nuclear Material Safety and Safeguards.

[FR Doc. E6–13110 Filed 8–9–06; 8:45 am]

BILLING CODE 7590–01–P

NUCLEAR REGULATORY COMMISSION

Correction to Biweekly Notice Applications and Amendments to Operating Licenses Involving No Significant Hazards Consideration

On August 1, 2006 (71 FR 43539), the **Federal Register** published the ''Biweekly Notice of Applications and Amendments to Operating Licenses Involving No Significant Hazards Considerations.'' On Page 43539, Column 1, the very last line in the column, Amendment Nos. should read ''294 and 277''.

Dated at Rockville, Maryland, this 3rd day of August 2006.

For the Nuclear Regulatory Commission

David H. Jaffe,

Senior Project Manager, Plant Licensing Branch III–1, Division of Operating Reactor Licensing, Office of Nuclear Reactor Regulation.

[FR Doc. E6–13111 Filed 8–9–06; 8:45 am]

BILLING CODE 7590–01–P

NUCLEAR REGULATORY COMMISSION

Regulatory Guide and Associated Standard Review Plan; Issuance, Availability

The Nuclear Regulatory Commission (NRC) has issued for public comment a revision of a regulatory guide (and its associated Standard Review Plan). Regulatory Guides are developed to describe and make available to the public such information as methods acceptable to the NRC staff for implementing specific parts of the NRC's regulations, techniques used by the staff in its review of applications for permits and licenses, and data needed by NRC staff in its review of applications for permits and licenses.

Regulatory Guide 1.200, Revision 1, ''An approach for Determining the Technical Adequacy of Probabilistic Risk Assessment Results for Risk-Informed Activities,'' provides guidance to licensees in determining the technical adequacy of a probabilistic risk analysis used in a risk-informed, integrated decision-making process, and to endorse standards and industry guidance. Guidance is provided in four areas:

(1) A minimal set of functional requirements of a technically acceptable PRA.

(2) NRC position on consensus PRA standards and industry PRA program documents.

(3) Demonstration that the PRA (*in toto* or specific parts) used in regulatory applications is of sufficient technical adequacy.

(4) Documentation that the PRA (*in toto* or specific parts) used in regulatory applications is of sufficient technical adequacy.

RG 1.200, Revision 1, proposes to endorse, with certain clarifications and substitutions, ASME Standard, ''Standard for Probabilistic Risk Assessment for Nuclear Power Plant Applications'' (RA–S–2002, RA–Sa–2003 and RA–Sb–2005, dated April 5, 2002, December 5, 2003, and December 30, 2005, respectively), Revision A3 of NEI–00–02, ''Probabilistic Risk (PRA) Peer Review Process Guidance,'' with its August 16, 2002 and May 19, 2006 supplemental guidance on industry self-assessment, and NEI–05–04, ''Process for Performing Follow-on PRA Peer Reviews Using the ASME PRA Standard,'' January 2005.

Standard Review Plan Chapter 19.1, Revision 1, ''Determining the Technical Adequacy of Probabilistic Risk and Assessment Results for Risk-Informed Activities,'' has been developed for the NRC staff to use in conjunction with Regulatory Guide 1.200, Revision 1.

It is the NRC's intent to update this RG when a new or revised PRA standard or industry program is published. If a new standard or program is published, an additional appendix will be added to set forth the staff position. If a revision of a current standard or program would impact the staff position, the appropriate appendix would be revised.

The NRC staff is soliciting comments on these proposed documents. Comments may be accompanied by relevant information or supporting data. Written comments may be submitted to the Rules and Directives Branch, Office of Administration, U.S. Nuclear Regulatory Commission, Washington, DC 20555. Copies of comments received may be examined at the NRC Public Document Room, 11555 Rockville Pike, Rockville, MD. Comments will be most helpful if received by September 15, 2006.

Comments received after this date will be considered if it is practical to do so, but the NRC is able to ensure consideration only for comments received on or before this date.

You may also provide comments via the NRC's interactive rulemaking Web site through the NRC home page (*http://www.nrc.gov*). This site provides the ability to upload comments as files (any format) if your web browser supports that function. For information about the interactive rulemaking Web site, contact Ms. Carol Gallagher, (301) 415–5905; e-mail *CAG@NRC.GOV*. For information about the draft guide and the related standard review plan chapter, contact Ms. M.T. Drouin at (301)415–6675; e-mail *MXD@NRC.GOV.*

Although a time limit is given for comments on this draft guide, comments and suggestions in connection with items for inclusion in guides currently being developed or improvements in all published guides are encouraged at any time.

Electronic copies of this draft RG are available on the NRC's Web site *http://www.nrc.gov* in the Reference Library under Regulatory Guides. Electronic copies are also available in NRC's Public Electronic Reading Room at the same Web site; DG–1122 is under ADAMS Accession Number ML062150231. Regulatory guides are available for inspection at the NRC's Public Document Room, 11555 Rockville Pike, Rockville, MD; the PDR's mailing address is USNRC PDR, Washington, DC 20555; telephone (301) 415–4737 or (800) 397–4205; fax (301) 415–3548; e-mail *PDR@NRC.GOV*. Requests for single copies of draft or final guides (which may be reproduced) or for placement on an automatic distribution list for single copies of future draft guides in specific divisions should be made in writing to the U.S. Nuclear Regulatory Commission, Washington, DC 20555, Attention: Reproduction and Distribution Services Section; or by e-mail to *DISTRIBUTION@NRC.GOV*; or by fax to (301) 415–2289. Telephone requests cannot be accommodated. Regulatory guides are not copyrighted, and Commission approval is not required to reproduce them. (5 U.S.C. 552(a)).

Dated at Rockville, MD this 3rd day of August 2006.

For the Nuclear Regulatory Commission.

Farouk Eltawila,

Director, Division of Risk Assessment and Special Projects, Office of Nuclear Regulatory Research.

[FR Doc. E6–13115 Filed 8–9–06; 8:45 am]

BILLING CODE 7590–01–P

SECURITIES AND EXCHANGE COMMISSION

Proposed Collection; Comment Request

Upon written request, copies available from: Securities and Exchange

Commission, Office of Filings and Information Services, Washington, DC 20549.

Extension: Regulation SHO; SEC File No. 270–534; OMB Control No. 3235–0589.

Notice is hereby given that pursuant to the Paperwork Reduction Act of 1995 (44 U.S.C. 3501 *et seq.*) the Securities and Exchange Commission (''Commission'') is soliciting comments on the collection of information summarized below. The Commission plans to submit this existing collection of information to the Office of Management and Budget for extension and approval.

Regulation SHO

Proposed Regulation SHO, Rule 201 (17 CFR 242.200 through 242.203) requires each broker-dealer that effects a sell order in any equity security to mark the order ''long,'' ''short,'' or ''short exempt.'' Proposed Regulation SHO, Rule 201 causes a collection of information because the rule's requirement that each order ticket be marked either ''long,'' ''short,'' or ''short exempt'' is a disclosure to third parties and the public imposed on ten or more persons.

The information required by the rule is necessary for the execution of the Commission's mandate under the Exchange Act to prevent fraudulent, manipulative, and deceptive acts and practices by broker-dealers. The purpose of the information collected is to enable regulators to monitor whether a person effecting a short sale is acting in accordance with proposed Regulation SHO. Without the requirement that each order or an equity security be marked either ''long,'' ''short,'' or ''short exempt,'' there would be no means to police compliance with Regulation SHO.

We assume that all of the approximately 6,752 registered broker-dealers effect sell orders in securities covered by proposed Regulation SHO. For purposes of the Paperwork Reduction Act, the Commission staff has estimated that a total of 1,164,755,007 trades are executed annually.

This is an average of approximately 172,505 annual responses by each respondent. Each response of marking orders ''long,'' ''short'' or ''short exempt'' takes approximately .000139 hours (.5 seconds) to complete. Thus, the total approximate estimated annual hour burden per year is 161,900 burden hours (1,164,755,007 responses @ 0.000139 hours/response). A reasonable estimate for the paperwork compliance for the proposed rules for each broker-dealer is approximately 24 burden hours (172,505 responses @ .000139 hours/response) or (161,900 burden hours/6,752 respondents).

Written comments are invited on: (a) Whether the proposed collection of information is necessary for the proper performance of the functions of the agency, including whether the information will have practical utility; (b) the accuracy of the agency's estimate of the burden of the collection of information; (c) ways to enhance the quality, utility, and clarity of the information collected; and (d) ways to minimize the burden of the collection of information on respondents, including through the use of automated collection techniques or other forms of information technology. Consideration will be given to comments and suggestions submitted in writing within 60 days of this publication.

Please direct your written comments to R. Corey Booth, Director/CIO, Office of Information Technology, Securities and Exchange Commission, c/o Shirley Martinson, 6432 General Green Way, Alexandria, VA 22312 or send an E-mail to: *PRA_Mailbox@sec.gov.* Comments must be submitted to OMB within 60 days of this notice.

Dated: July 31, 2006.

Nancy M. Morris,

Secretary.

[FR Doc. E6–13027 Filed 8–9–06; 8:45 am]

BILLING CODE 8010–01–P

SECURITIES AND EXCHANGE COMMISSION

[Release No. 34–54272; File No. SR–CBOE–2006–59]

Self-Regulatory Organizations; Chicago Board Options Exchange, Incorporated; Order Granting Accelerated Approval of Proposed Rule Change and Amendment No. 1 Thereto Relating to Extension of the Options Intermarket Linkage Fees Pilot Program

August 3, 2006.

On June 15, 2006, the Chicago Board Options Exchange, Incorporated (''CBOE'' or ''Exchange'') filed with the Securities and Exchange Commission (''Commission''), pursuant to Section 19(b)(1) of the Securities Exchange Act of 1934 (''Act'')[1] and Rule 19b–4 thereunder,[2] a proposed rule change to amend its Fees Schedule to extend until July 31, 2007 the Options Intermarket Linkage (''Linkage'') fee pilot program (''Pilot Program''). The proposed rule change was published for comment in the **Federal Register** on July 6, 2006.[3] The Commission received no comments on the proposal. On August 3, 2006, the Exchange filed Amendment No. 1 to the proposed rule change.[4] This order approves the proposed rule change, as amended, on an accelerated basis.

The Exchange's fees for Principal and Principal Acting as Agent orders are operating under the Pilot Program. These Linkage-related fees expired on July 31, 2006.[5] The Exchange proposes to retroactively extend from August 1, 2006 through July 31, 2007 the Pilot Program.[6]

After careful review, the Commission finds that the proposed rule change, as amended, is consistent with the requirements of the Act and the rules and regulations applicable thereunder to a national securities exchange.[7] More specifically, the Commission finds that the proposal is consistent with Section 6(b) of the Act[8] in general, and furthers the objectives of Section 6(b)(4) of the Act[9] in particular, in that it is designed to provide for the equitable allocation of reasonable dues, fees, and other charges among CBOE members and other persons using its facilities. The Commission believes that: (i) The prospective extension of the Pilot Program will give the Exchange and the Commission further opportunity to evaluate whether the fees are appropriate; and (ii) the retroactive extension of the Pilot Program will permit the pilot to continue on an uninterrupted basis for the two days between the expiration of the pilot on July 31, 2006 and the date of this approval order.

The Commission finds good cause, pursuant to Section 19(b)(2) of the Act,[10] for approving the proposed rule change prior to the 30th day after the date of publication of notice thereof in the **Federal Register**. Specifically, the Commission notes that accelerated approval of the proposal will allow the Pilot Program to continue without

[1] 15 U.S.C. 78s(b)(1).

[2] 17 CFR 240.19b–4.

[3] Securities Exchange Act Release No. 54064 (June 29, 2006), 71 FR 38438.

[4] *See infra*, at note 6.

[5] *See* Securities Exchange Act Release No. 52073 (July 20, 2005), 70 FR 43474 (July 27, 2005) (SR–CBOE–2005–54).

[6] In Amendment No. 1, in light of the expiration of the Pilot Program, the Exchange modified its proposal to request that the Pilot Program be extended retroactively. Amendment No. 1 is a technical amendment and is not subject to notice and comment.

[7] In approving the proposed rule change, as amended, the Commission has considered the proposed rule's impact on efficiency, competition, and capital formation. *See* 15 U.S.C. 78c(f).

[8] 15 U.S.C. 78f(b).

[9] 15 U.S.C. 78f(b)(4).

[10] 15 U.S.C. 78s(b)(2).

interruption as the Exchange and the Commission further consider the appropriateness of Linkage fees.

It is therefore ordered, pursuant to Section 19(b)(2) of the Act,[11] that the proposed rule change (SR–CBOE–2006–59), as amended, is hereby approved on an accelerated basis.

For the Commission, by the Division of Market Regulation, pursuant to delegated authority.[12]

Nancy M. Morris,

Secretary.

[FR Doc. E6–13003 Filed 8–9–06; 8:45 am]

BILLING CODE 8010–01–P

SECURITIES AND EXCHANGE COMMISSION

[Release No. 34–54275; File No. SR–CBOE–2006–61]

Self-Regulatory Organizations; Chicago Board Options Exchange, Incorporated; Notice of Filing and Immediate Effectiveness of Proposed Rule Change Relating to the Modified ROS Opening Procedure Cut-Off Times

August 4, 2006.

Pursuant to section 19(b)(1) of the Securities Exchange Act of 1934 (''Act''),[1] and Rule 19b–4 thereunder,[2] notice is hereby given that on July 27, 2006, the Chicago Board Options Exchange, Incorporated (''Exchange'' or ''CBOE'') filed with the Securities and Exchange Commission (''Commission'') the proposed rule change as described in Items I and II below, which Items have been prepared by the Exchange. The Exchange has designated the proposed rule change as constituting a non-controversial rule change under Rule 19b–4(f)(6) under the Act,[3] which renders the proposal effective upon filing with the Commission. The Commission is publishing this notice to solicit comments on the proposed rule change from interested persons.

I. Self-Regulatory Organization's Statement of the Terms of Substance of the Proposed Rule Change

The Exchange proposes to modify certain cut-off times applicable to its modified Rapid Opening System (''ROS'') opening procedure for the calculation of settlement prices of volatility indexes. Proposed new language is *italicized;* proposed deletions are in brackets:

* * * * *

Rule 6.2A. Rapid Opening System

This rule has no applicability to series trading on the CBOE Hybrid Opening System. Such series will be governed by Rule 6.2B.

(a)—(c) No change.

* * * Interpretation and Policies:

.01–.02 No change.

.03 Modified ROS Opening Procedure For Calculation of Settlement Prices of Volatility Indexes.

All provisions set forth in Rule 6.2A and the accompanying interpretations and policies shall remain in effect unless superseded or modified by this Rule 6.2A.03. To facilitate the calculation of a settlement price for futures and options contracts on volatility indexes, the Exchange shall utilize a modified ROS opening procedure for any index option series with respect to which a volatility index is calculated (including any index option series opened under Rule 6.2A.01). This modified ROS opening procedure will be utilized only on the final settlement date of the options and futures contracts on the applicable volatility index in each expiration month.

The following provisions shall be applicable when the modified ROS opening procedure set forth in this Rule 6.2A.03 is in effect for an index option with respect to which a volatility index is calculated:

(i)–(iv) No change.

(v) All index option orders for participation in the modified ROS opening procedure that are related to positions in, or a trading strategy involving, volatility index options or futures, and any change to or cancellation of any such order:

(A) must be received prior to 8 a.m. (CT), and

(B) may not be cancelled or changed after 8 a.m. (CT), unless the order is not executed in the modified ROS opening procedure and the cancellation or change is submitted after the modified ROS opening procedure is concluded (provided that any such order may be changed or cancelled after 8:00 a.m. (CT) and prior to [8:25 a.m. (CT)] *applicable cut-off time established in accordance with paragraph (vi)* in order to correct a legitimate error, in which case the member submitting the change or cancellation shall prepare and maintain a memorandum setting forth the circumstances that resulted in the change or cancellation and shall file a copy of the memorandum with the Exchange no later than the next business day in a form and manner prescribed by the Exchange).

In general, the Exchange shall consider index option orders to be related to positions in, or a trading strategy involving, volatility index options or futures for purposes of this Rule 6.2A.03(v) if the orders possess the following three characteristics:

(i)–(iii) No change.

Whether index option orders are related to positions in, or a trading strategy involving, volatility index options or futures for purposes of this Rule 6.2A.03(v) depends upon specific facts and circumstances. Order types other than those provided above may also be deemed by the Exchange to fall within this category of orders if the Exchange determines that to be the case based upon the applicable facts and circumstances.

The provisions of this Rule 6.2A.03(v) may be suspended by two Floor Officials in the event of unusual market conditions.

(vi) All other index option orders for participation in the modified ROS opening procedure, and any change to or cancellation of any such order, must be received prior to [8:25 a.m. (CT)] the applicable cut-off time in order to participate at the ROS opening price for the applicable index option series. *The applicable cut-off time for the affected index option series will be established by the appropriate Procedure Committee on a class-by-class basis, provided the cut-off time will be no earlier than 8:25 a.m. (CT) and no later than 8:30 a.m. (CT). All pronouncements regarding changes to the applicable cut-off time will be announced to the membership via Regulatory Circular that is issued at least one day prior to implementation.*

(vii)—(ix) No change.

* * * * *

II. Self-Regulatory Organization's Statement of the Purpose of, and Statutory Basis for, the Proposed Rule Change

In its filing with the Commission, the Exchange included statements concerning the purpose of and basis for the proposed rule change and discussed any comments it received on the proposed rule change. The text of those statements may be examined at the places specified in Item IV below. The Exchange has prepared summaries, set forth in sections A, B, and C below, of the most significant parts of such statements.

---

[11] *Id.*

[12] 17 CFR 200.30–3(a)(12).

[1] 15 U.S.C. 78s(b)(1).

[2] 17 CFR 240.19b–4.

[3] 17 CFR 240.19b–4(f)(6).

A. Self-Regulatory Organization's Statement of the Purpose of, and the Statutory Basis for, the Proposed Rule Change

1. Purpose

The modified ROS opening procedure facilitates the trading of options and futures on volatility indexes intended to be traded on CBOE or on CBOE Futures Exchange, LLC (''CFE'') by modifying certain of the rules that govern ROS for index option series whose prices are used to derive the volatility indexes on which options and futures are traded. The modified opening procedure is only utilized on the settlement days of options and futures contracts on the applicable volatility indexes in each expiration month.

In relevant part, the modified ROS opening procedure allows all orders (including public customer, broker-dealer, Exchange market-maker and away market-maker and specialist orders), other than contingency orders, to be eligible to be placed on the electronic book for those option contract months whose prices are used to derive the volatility indexes on which options and futures are traded, for the purpose of permitting those orders to participate in the ROS opening price calculation for the applicable index option series. The procedure also provides that, if the ROS system is implemented in an option contract for which Lead Market-Makers (''LMMs'') have been appointed, the LMMs will collectively set the AutoQuote values that will be used by ROS.

The procedure specifies certain cut-off times respecting the receipt of orders for participation in the opening. Currently, CBOE Rule 6.2A.03(v) provides that index option orders that are related to positions in, or a trading strategy involving, volatility index options or futures, and any change to or cancellation of any such order (''strategy orders''), must be received prior to 8:00 a.m. (all times noted herein are Central Time).[4] CBOE Rule 6.2A.03(vi) provides that all other index option orders, and any change to or cancellation of any such order (''non-strategy orders''), must be received prior to 8:25 a.m. These cut-off times have been revised over time based on the Exchange's experience in applying the procedure.[5]

The instant rule change amends the language in the rule text respecting the 8:25 a.m. cut-off time for non-strategy orders by eliminating the specific time and instead providing that the cut-off time may be established by the appropriate Exchange procedure committee on a class-by-class basis,[6] provided the established cut-off time cannot be set earlier than 8:25 a.m. or later than 8:30 a.m. The amended rule text also provides that pronouncements regarding changes to the established cut-off time will be announced to the membership via Regulatory Circular that is issued at least one day prior to implementation. Finally, the Exchange is proposing a cross-reference change to the rule text so that the applicable cut-off time for changing or canceling strategy orders to correct legitimate errors corresponds with the cut-off time for entering, changing or canceling non-strategy orders.[7]

According to the Exchange, amending the modified ROS opening procedure in this manner will give the Exchange additional flexibility to establish a cut-off time that, on the one hand, provides market participants with a reasonable amount of time to monitor potential changes in the market that may occur up until the cut-off time and to respond to those changes through the placement of orders, cancellations, or changes to orders previously placed on the electronic book, and, on the other hand, provides LMMs with a reasonable amount of time to review order imbalances on the electronic book and collectively set AutoQuote values that will be used by ROS in calculating the opening prices for the option series. Incorporating this flexibility into the rule text will also provide the Exchange with the means to more efficiently establish and implement modifications to the cut-off time within the defined interval, and will therefore serve to foster fair and orderly markets. For these reasons, the Exchange believes that building this flexibility into the procedure is reasonable and appropriate, and will improve the operation of the modified ROS opening procedure.

2. Statutory Basis

The Exchange believes the proposed rule change is consistent with the Act and the rules and regulations thereunder and, in particular, the requirements of section 6(b) of the Act.[8] Specifically, the Exchange believes the proposed rule change is consistent with the section 6(b)(5)[9] requirements that the rules of an exchange be designed to prevent fraudulent and manipulative acts and practices, to promote just and

[4] Certain exceptions to the 8:00 a.m. cut-off time apply with respect to strategy orders. For instance, under the current procedure, a strategy order may not be cancelled or changed after 8:00 a.m., unless the order is not executed in the modified ROS opening procedure and the cancellation or change is submitted after the modified ROS opening procedure is concluded (provided that any such order may be changed or cancelled after 8:00 a.m. and prior to 8:25 a.m. in order to correct a legitimate error, in which case the member submitting the change or cancellation shall prepare and maintain a memorandum setting for the circumstances that resulted in the change or cancellation and shall file a copy of the memorandum with the Exchange no later than the next business day in a form and manner prescribed by the Exchange). CBOE Rule 6.2A.03(v)(B). The cut-off requirements may be suspended by two Floor Officials in the event of unusual market conditions. CBOE Rule 6.2A.03(v).

[5] *See* Securities Exchange Act Release Nos. 49468 (March 24, 2004), 69 FR 17000 (March 31, 2004) (SR–CBOE2004–11) (order approving the modified ROS opening procedure on a pilot basis which initially established the cut-off time for all orders at 8:25 a.m.); 49798 (June 3, 2004), 69 FR 32644 (June 10, 2004) (SR–CBOE–2004–23) (order permanently approving the modified ROS opening procedure pilot program); 49798A (July 6, 2004), 69 FR 41868 (July 12, 2004) (correction to approval order); 49679 (May 11, 2004), 69 FR 27957 (May 17, 2004) (SR–CBOE–2004–27) (notice of filing and immediately effectiveness which revised the cut-off time for all orders to 8:28 a.m.); and 52367 (August 31, 2005), 70 FR 53401 (September 8, 2005) (SR–CBOE–2004–86) (order approving an amendment to the permanent program that, in relevant part, revised the cut-off time to its current form, which is 8:00 a.m. for strategy orders and 8:25 a.m. for non-strategy orders).

[6] The modified ROS opening procedure is currently in use only with respect to S&P 500 Composite Stock Price Index (SPX) options whose prices are used to derive the settlement value of futures on the CBOE Volatility Index traded on CFE. However, if the ROS system is implemented in an index option class, the Rule provides for the modified procedure to be used to facilitate the calculation of a settlement price for futures and options contracts on volatility indexes for any index option series with respect to which a volatility index is calculated. Because the modified procedure may be used for different index option classes, the proposed rule change seeks to provide the Exchange with the flexibility to establish the applicable cut-off time on a class-by-class basis.

[7] *See* CBOE Rule 6.2A.03(v)(B).

[8] 15 U.S.C. 78f(b).

[9] 15 U.S.C. 78f(b)(5).

equitable principles of trade, to remove impediments to and perfect the mechanism of a free and open market and a national market system, and, in general, to protect investors and the public interest.

B. Self-Regulatory Organization's Statement on Burden on Competition

CBOE does not believe that the proposed rule change will impose any burden on competition that is not necessary or appropriate in furtherance of the purposes of the Act.

C. Self-Regulatory Organization's Statement on Comments on the Proposed Rule Change Received From Members, Participants, or Others

The Exchange neither solicited nor received comments on the proposal.

III. Date of Effectiveness of the Proposed Rule Change and Timing for Commission Action

Because the foregoing rule does not (i) significantly affect the protection of investors or the public interest; (ii) impose any significant burden on competition; and (iii) become operative for 30 days after the date of the filing or such shorter time as the Commission may designate if consistent with the protection of investors and the public interest, it has become effective pursuant to section 19(b)(3)(A) of the Act [10] and Rule 19b–4(f)(6) thereunder.[11]

CBOE has requested a waiver of the 30-day operative delay. The Commission believes, consistent with the protection of investors and the public interest, that such waiver will permit CBOE to implement the proposed rule change for the August 16, 2006 settlement date and to provide advance notice of this change to members prior to that date. For these reasons, the Commission designates the proposal to be effective and operative upon filing with the Commission.[12] At any time within 60 days of the filing of such proposed rule change, the Commission may summarily abrogate such rule change if it appears to the Commission that such action is necessary or appropriate in the public interest, for the protection of investors, or otherwise in furtherance of the purposes of the Act.

[10] 15 U.S.C. 78s(b)(3)(A).

[11] 17 CFR 240.19b–4(f)(6).

[12] For purposes of waiving the operative date of this proposal, the Commission has considered the proposed rule's impact on efficiency, competition, and capital formation. 15 U.S.C. 78c(f).

IV. Solicitation of Comments

Interested persons are invited to submit written data, views, and arguments concerning the foregoing, including whether the proposed rule change is consistent with the Act. Comments may be submitted by any of the following methods:

Electronic Comments

- Use the Commission's Internet comment form (*http://www.sec.gov/rules/sro.shtml*); or
- Send an e-mail to *rule-comments@sec.gov.* Please include File Number SR–CBOE–2006–61 on the subject line.

Paper Comments

- Send paper comments in triplicate to Nancy M. Morris, Secretary, Securities and Exchange Commission, 100 F Street, NE., Washington, DC 20549–1090.

All submissions should refer to File Number SR-CBOE–2006–61. This file number should be included on the subject line if e-mail is used. To help the Commission process and review your comments more efficiently, please use only one method. The Commission will post all comments on the Commission's Internet Web site (*http://www.sec.gov/rules/sro.shtml*). Copies of the submission, all subsequent amendments, all written statements with respect to the proposed rule change that are filed with the Commission, and all written communications relating to the proposed rule change between the Commission and any person, other than those that may be withheld from the public in accordance with the provisions of 5 U.S.C. 552, will be available for inspection and copying in the Commission's Public Reference section, 100 F Street, NE., Washington, DC 20549. Copies of such filing also will be available for inspection and copying at the principal office of the CBOE. All comments received will be posted without change; the Commission does not edit personal identifying information from submissions. You should submit only information that you wish to make available publicly. All submissions should refer to File Number SR–CBOE–2006–61 and should be submitted on or before August 31, 2006.

For the Commission, by the Division of Market Regulation, pursuant to delegated authority.[13]

Nancy M. Morris,

Secretary.

[FR Doc. E6–13022 Filed 8–9–06; 8:45 am]

BILLING CODE 8010–01–P

SECURITIES AND EXCHANGE COMMISSION

[Release No. 34–54273; File No. SR–ISE–2006–45]

Self-Regulatory Organizations; International Securities Exchange, Inc.; Notice of Filing of a Proposed Rule Change Relating to Establishing ISE Stock Exchange as a Facility of International Securities Exchange, Inc.

August 3, 2006.

Pursuant to section 19(b)(1) of the Securities Exchange Act of 1934 (''Act''),[1] and Rule 19b–4 thereunder,[2] notice is hereby given that on July 31, 2006, the International Securities Exchange, Inc. (''ISE'' or ''Exchange'') filed with the Securities and Exchange Commission (''Commission'') the proposed rule change as described in Items I, II, and III below, which Items have been prepared by the Exchange. The Commission is publishing this notice to solicit comments on the proposed rule change from interested persons.

I. Self-Regulatory Organization's Statement of the Terms of Substance of the Proposed Rule Change

The ISE proposes to establish ISE Stock Exchange (''ISE Stock'') as a facility, as that term is defined in section 3(a)(2) of the Act,[3] of the ISE. ISE states that ISE Stock would administer a fully automated marketplace for the trading of equity securities by Electronic Access Members, or EAMs, of ISE under the rules of ISE. ISE Stock would be operated by ISE Stock Exchange, LLC (''ISE Stock, LLC''), a Delaware limited liability company. In this filing, the Exchange is submitting to the Commission: the Certificate of Formation (Exhibit 5(a)); the proposed Second Amended and Restated Limited Liability Company Agreement of ISE Stock (''LLC Agreement'') (Exhibit 5(b)); a Description of Services under the Management Agreement Exhibit 5(c)); Rule Changes of International Securities Exchange (Exhibit 5(d)); Constitutional

[13] 17 CFR 200.30–3(a)(12).

[1] 15 U.S.C. 78s(b)(1).

[2] 17 CFR 240.19b–4.

[3] 15 U.S.C. 78c(a)(2).

Changes of International Securities Exchange, LLC (Exhibit 5(e)). The ISE states that the Certificate of Formation and the LLC Agreement are the source of ISE Stock LLC's governance and operating authority and, therefore, function in a similar manner as articles of incorporation and by-laws function for a corporation. Certain sections of these documents are discussed below. The full text of Exhibit 5(a) through (e) is available on the Commission's Web site at *http://www.sec.gov,* the Web site of the Exchange at *http://www.iseoptions.com,* at the principal office of the Exchange, and at the Commission's Public Reference Room.

II. Self-Regulatory Organization's Statement of the Purpose of, and Statutory Basis for, the Proposed Rule Change

In its filing with the Commission, the Exchange included statements concerning the purpose of, and basis for, the proposed rule change and discussed any comments it received on the proposed rule change. The text of these statements may be examined at the places specified in Item IV below. The Exchange has prepared summaries, set forth in Sections A, B, and C below, of the most significant aspects of such statements.

A. Self-Regulatory Organization's Statement of the Purpose of, and Statutory Basis for, the Proposed Rule Change

1. Purpose

The Exchange proposes to establish ISE Stock as a facility, as that term is defined in section 3(a)(2) of the Act,[4] of the ISE. ISE Stock would administer a fully automated marketplace for the trading of equity securities by EAMs of ISE under the rules of ISE. ISE Stock would be operated by ISE Stock, LLC, a Delaware limited liability company. In this filing, the Exchange is submitting to the Commission the Certificate of Formation and the LLC Agreement of ISE Stock, LLC. The Certificate of Formation and the LLC Agreement are the source of ISE Stock, LLC's governance and operating authority and, therefore, function in a similar manner as articles of incorporation and by-laws function for a corporation.

The ISE is a founding and controlling member of ISE Stock, LLC. ISE owns all of the Class A Membership Units of ISE Stock, LLC, representing 51% of the voting securities of ISE Stock, LLC. In addition to its ownership stake in ISE Stock, LLC, ISE will enter into a management agreement (the ''Management Agreement'') with ISE Stock, LLC. Pursuant to the Management Agreement, ISE Stock, LLC would appoint ISE as ISE Stock, LLC's manager (''Manager'') to perform certain management, operational, and related services. In particular, as Manager, ISE would have responsibility for all regulatory functions related to the facility (including conducting market surveillance for trading on ISE Stock). Moreover, the Board of Directors of ISE would be required to approve any changes to the Certificate of Formation and the LLC Agreement of ISE Stock, LLC that are required to be filed with the Commission pursuant to section 19(b) of the Act and Rule 19b–4 thereunder.[5] ISE Stock, LLC would have responsibility for the business operations of the facility to the extent those activities are not inconsistent with the regulatory and oversight functions of the ISE as Manager. This means that ISE Stock, LLC would not interfere with ISE's self-regulatory responsibilities. ISE is a registered ''national securities exchange'' under Section 6 of the Act[6] and a self-regulatory organization (''SRO''). ISE represents that it has adequate funds to discharge all regulatory functions related to the facility that it proposes to undertake to perform under the Management Agreement and the LLC Agreement.[7]

In this filing, the Exchange is submitting to the Commission the Certificate of Formation and the LLC Agreement of ISE Stock, LLC specifically relating to the control and governance of ISE Stock, LLC that would ensure that the ISE has the authority within ISE Stock, LLC to maintain its responsibility for all regulatory functions related to the ISE Stock facility. The LLC Agreement would ensure that the SEC and the ISE would have regulatory authority over investors and members of the advisory board of ISE Stock, LLC (the ''Advisory Board''). The Exchange will submit separate filings to establish ISE rules relating to listing, membership and trading on ISE Stock. As the purpose of this filing is to focus on only those provisions which are directly related to the ISE authority for all regulatory functions of its proposed ISE Stock facility, the Exchange's discussion in this filing will be limited to those relevant provisions of the LLC Agreement.

Description of LLC Membership Interests in ISE Stock, LLC

As an LLC, ownership of ISE Stock, LLC is represented by limited liability company membership interests in ISE Stock, LLC. The holders of such membership interests are referred to as the members (the ''Members'') of ISE Stock, LLC. The membership interests are divided into two classes—Class A and Class B limited liability company membership units (collectively, the ''Units''). The Units represent equity interests in ISE Stock, LLC and entitle the holders thereof to participate in certain of ISE Stock, LLC's allocations and distributions. Each ''Class A Unit'' represents a limited liability company membership interest in ISE Stock, LLC and as a class, the holders of the Class A Units hold fifty-one percent (51%) of the aggregate voting rights of all Members. Each holder of a Class A Unit has a vote, in respect of each Class A Unit held by such holder of record on each matter on which holders of Units are entitled to vote, equal to the product of (A) 51 and (B) a fraction, whose numerator is the number of Class A Units then held by such holder and whose denominator is the number of Class A Units then held by all holders of Class A Units.[8] Currently, ISE holds all of the Class A Units, making it a fifty-one percent (51%) owner of ISE Stock, LLC. Each ''Class B Unit'' represents a limited liability company membership interest in ISE Stock, LLC. Each holder of a Class B Unit shall have a vote, in respect of each Class B Unit held by such holder of record on each matter on which holders of Class B Units shall be entitled to vote as specifically required by the LLC Agreement or by the Delaware Limited Liability Company Act (''DLLCA''),[9] equal to the product of (A) 49 and (B) a fraction, whose numerator is the number of Class B Units then held by such holder and whose denominator is the number of Class B Units then held by all holders of Class B Units.[10] There are 49 Class B Units issued and outstanding, held by 11 Class B Unit holders. The ISE represents that no Class B Unit holder owns more than 5 units.

[4] 15 U.S.C. 78c(a)(2).

[5] LLC Agreement, Section 12.1.

[6] 15 U.S.C. 78f.

[7] Telephone conference between Michou H.M. Nguyen, Special Counsel, Division of Market Regulation (''Division''), Commission, and Tracy Tang, Assistant General Counsel, Exchange, on August 2, 2006. (clarifying that the sentence refers to the LLC Agreement as well) (herein after referred to as ''August 2nd Telephone Conference''). *See also* LLC Agreement, Section 9.2(d).

[8] LLC Agreement, Section 3.2(a).

[9] August 2nd Telephone Conference (clarifying that reference is to the DLLCA and not the Act).

[10] LLC Agreement, Section 3.2(b).

Management of ISE Stock, LLC

As the Manager, ISE would have the authority to make all decisions regarding the business of ISE Stock, LLC and matters concerning the Units, such as whether or not to authorize distributions.[11] In certain limited circumstances, the Manager would need the approval of two-thirds of the disinterested members of the Advisory Board prior to taking certain actions, as discussed below. The Manager would be responsible for the control and management of the business of ISE Stock, LLC, and must exercise good faith and integrity in handling its affairs.[12]

Under Section 7.1 of the LLC Agreement, other than as set forth in the LLC Agreement or required by the DLLCA[13] or by the Commission, the Members do not participate in the management or control of ISE Stock, LLC's business, they do not transact any business for ISE Stock, LLC, and they do not have the power to act for or bind ISE Stock, LLC. All of those powers are vested solely and exclusively in the Manager. Specifically, under Section 8.1 of the LLC Agreement, subject to the limitations provided in the LLC Agreement and except as specifically provided therein, the Manager shall have exclusive and complete authority and discretion to manage the operations and affairs of ISE Stock, LLC and to make all decisions regarding the business of ISE Stock, LLC and shall have the power to act for or bind ISE Stock, LLC. Any action taken by the Manager shall constitute the act of and serve to bind ISE Stock, LLC. Further, except as otherwise specifically provided in the LLC Agreement, the Manager has all rights and powers of a ''manager'' under the DLLCA, and shall have all authority, rights and powers in the management of ISE Stock, LLC business to do any and all other acts and things necessary, proper, convenient or advisable to effectuate the purposes of the LLC Agreement.

Under Section 8.13 of the LLC Agreement, any replacement and appointment of the Manager, and any assignment of the rights and obligations of the Manager under the Management Agreement, shall be subject to the rule filing process pursuant to section 19 of the Act. ISE believes that this section provides the Commission with the authority to review and subject to public comment any replacement of the Manager of ISE Stock which the Commission may deem to have the potential to affect ISE's self-regulatory responsibilities regarding its proposed ISE Stock facility.

Governance of ISE Stock, LLC

Section 8.2(d)(i) of the LLC Agreement establishes the Advisory Board of ISE Stock, LLC as a general advisory board and provides that the Advisory Board will have no power or authority to act for ISE Stock, LLC or to otherwise participate in the ISE Stock's management, except for certain limited matters. Other than the matters for which approval of the Advisory Board is specifically required by the LLC Agreement, any actions taken by the Advisory Board are advisory only and neither the Manager nor any of its Related Persons are required or otherwise bound to act in accordance with any decision, action or comments of the Advisory Board. The Advisory Board has no power or authority to act for ISE Stock, LLC or to otherwise participate in ISE Stock, LLC management. All decisions, including responsibility for the management of ISE Stock, LLC, rest with the manager, and in no event will a member of the Advisory Board be considered a ''manager'' of ISE Stock, LLC.

Section 8.2(d)(ii) provides that the purpose of the Advisory Board is to: (1) Review and assess any potential conflicts of interest that may arise between ISE Stock, LLC, on the one hand, and the Manager, any Member and/or any of their respective Related Persons,[14] on the other hand (including without limitation conflicts with respect to the receipt by the Manager, or its Related Persons, of fees for services rendered to ISE Stock, LLC); and (2) generally to consult with the Manager on the ISE Stock, LLC's progress in achieving its business objectives.

Section 8.2(d)(iii) provides that the Advisory Board consists of seven members. Each Member of ISE Stock, LLC may nominate a candidate for election to serve on the Advisory Board. Three members of the Advisory Board shall be officers, directors, or partners of holders of the Class A Units, and shall be elected annually by a plurality of the holders of the Class A Units voting together as a class (each a ''Class A Advisory Board Member''). Each Class A Advisory Board member shall serve for a term of one year. Four members of the Advisory Board shall be officers, directors, or partners of holders of the Class B Units, and, except as provided below, shall be elected annually by a plurality of the holders of the Class B Units voting together as a class (each a ''Class B Advisory Board Member''). In any situation where an Advisory Board Member's job status changes, either upon a significant change in the employment status at the same employer or upon a change of employer, or if the Member employing the Advisory Board member ceases to be a holder of Class B Units, the Advisory Board member must tender his or her resignation to the Manager, which the Manager, in consultation with the Advisory Board, may, but need not, accept. Notwithstanding any of the foregoing, no Member, other than ISE, shall have more than one representative elected to the Advisory Board during any term. The initial Class B Advisory Board Members shall serve staggered terms with (x) two of such Class B Advisory Board Members serving two consecutive one-year terms, and (y) the other two of such Class B Advisory Board Members serving three consecutive one-year terms. Thereafter, each Class B Advisory Board Member shall serve for a term of one year. In no event shall any Class B Advisory Board Member serve more than three consecutive one-year terms. Each Class B Advisory Board Member will serve until the conclusion of its one-year term, and until such Class B Advisory Board Member's successor has been elected, or re-elected as permitted under the LLC Agreement, by a plurality of the holders of the Class B Units voting together as a class, except in the event of such Class B Advisory Board Member's earlier death, resignation, or termination.

Under Section 8.2(e), ISE Stock, LLC also has advisory committees (the

[11] LLC Agreement, Section 8.1 and 8.12.

[12] August 2nd Telephone Conference (removing language).

[13] August 2nd Telephone Conference (clarifying that reference is to the DLLCA and not the Act).

[14] ''Related Person'' means (1) With respect to any Person, any executive officer (as defined under Rule 3b–7 under the Act), director, general partner, manager or managing member, as applicable, and all ''affiliates'' and ''associates'' of such Person (as such terms are defined in Rule 12b–2 under the Act); (2) with respect to any Person constituting a ''Exchange Member'' (as such term is defined in the Constitution of ISE, a copy of which will be provided to any member of ISE Stock upon written request therefore), any broker or dealer with which such ''Exchange Member'' is associated; (3) with respect to any Person that is an executive officer (as defined under Rule 3b–7 under the Act), director, general partner, manager or managing member of a company, corporation or similar entity, such company, corporation or entity, as applicable; and (4) any two or more Persons that have any agreement, arrangement or understanding (whether or not in writing) to act together for the purpose of acquiring, voting, holding or disposing of Units of ISE Stock, LLC; and the term ''beneficially owned'' and derivative or similar words shall have the meaning set forth in Regulation 13D–G under the Act. LLC Agreement Section 2.1 ''Definitions.'' August 2nd Telephone Conference (conforming purpose section to text of LLC Agreement).

''Person'' means any individual, partnership, limited liability company, association, corporation, trust or other entity. LLC Agreement Section 2.1 ''Definitions.''

''Advisory Committees''), each consisting of up to ten individuals who consult with ISE Stock, LLC and assist with the development of (1) Agency broker trading; (2) institutional trading; (3) technology; and (4) bulk quoting. As with the Advisory Board, the Advisory Committees have no power or authority to act for ISE Stock, LLC or to otherwise participate in management.

The ISE believes that these limitations on the powers of the Advisory Board and Advisory Committees of ISE Stock, LLC will enable ISE to have complete authority over the control the actions of ISE Stock, LLC, especially as they relate to regulatory responsibilities.

Under Section 8.2(d)(vii) of the LLC Agreement, in discharging his or her responsibilities as a member of the Advisory Board, such member shall take into consideration the effect that ISE Stock LLC's actions would have on the ability of ISE Stock, LLC [15] to carry out its responsibilities under the Act and whether or not his or her actions as a member of the Advisory Board would cause ISE Stock, LLC to engage in conduct that fosters and does not interfere with ISE Stock LLC's ability to prevent fraudulent and manipulative acts and practices; to promote just and equitable principles of trade; to foster cooperation and coordination with persons engaged in regulating, clearing, settling, processing information with respect to, and facilitating transactions in securities; to remove impediments to and perfect the mechanisms of a free and open market and a national market system; and, in general, to protect investors and the public interest. Furthermore, in discharging his or her responsibilities as a member of the Advisory Board, each member shall comply with the Federal securities laws and the rules and regulations thereunder and shall cooperate with ISE and the Commission pursuant to their respective regulatory authority and the provisions of the LLC Agreement.

Under Section 8.2(d)(viii) of the LLC Agreement, the Manager, in its sole discretion, may, after appropriate notice and opportunity for hearing, terminate an Advisory Board member: (a) In the event such Advisory Board member has violated any provision of the LLC Agreement, any Federal or state securities law, or (b) if the Manager determines that such action is necessary or appropriate in the public interest or for the protection of investors.

ISE believes that these provisions would require all members of ISE Stock's Advisory Board, regardless of their association with ISE, to adhere to regulatory responsibilities in that they must comply with Federal securities laws and the rules and regulations promulgated thereunder, and cooperate with the Commission and the ISE pursuant to their regulatory authority. In addition, all members of the Advisory Board would be required to take into consideration and facilitate ISE's responsibility to comply with the requirements under section 6(b)(5) of the Act.[16] Members of the Advisory Board that do not adhere to these requirements face termination from the ISE Stock Advisory Board and possible sanctions by regulatory authorities.

Voting Limitations of Members

Under Section 7.11 of the LLC Agreement, no Person (other than ISE), either alone or together with its Related Persons, as of any record date for the determination of members entitled to vote on any matter, shall be entitled to: (i) Vote or cause the voting of Units beneficially owned by such Person or its Related Persons, in person or by proxy or through any voting agreement, plan, or arrangement, to the extent that such Units represent in the aggregate more than twenty percent (20%) of voting power of the then-issued and outstanding Units (such threshold being hereinafter referred to as the ''Voting Limitation''); or (ii) enter into any voting agreement, plan, or arrangement that would result in Units beneficially owned by such Person or its Related Persons, subject to such voting agreement, plan, or arrangement not being voted on a matter, or any proxy relating thereto being withheld, where the effect of that voting agreement, plan, or arrangement would be to enable any Person, alone or together with its Related Persons, to exceed the Voting Limitation. ISE Stock, LLC shall disregard any such votes purported to be cast in excess of the Voting Limitation.

The limitations imposed by Sections 7.11 may be waived by the Manager, if in its sole discretion, it consented to expressly permit such waiver of the Voting Limitation; and such waiver shall have been filed with, and approved by, the Commission under section 19(b) of the Act and shall have become effective thereunder. In granting a waiver, the Manager must have determined that: (i) The exercise of such voting rights or the entering of such agreement, plan or other arrangement, as applicable, by such Person, either alone or together with its Related Persons, will not impair the ability of the ISE Stock, LLC and ISE, as the manager, to carry out its functions and responsibilities, including, but not limited to, under the Act, is otherwise in the best interests of the ISE Stock, LLC and its Members; (ii) such voting rights by such Person, either alone or together with its Related Persons, will not impair the ability of the Commission to enforce the Act; (iii) neither such Person nor its Related Persons are subject to any applicable ''statutory disqualification'' (within the meaning of section 3(a)(39) of the Act); and (iv) neither such Person nor its Related Persons is an ''Exchange Member'' (as such term is defined in the Constitution of ISE).

The ISE believes that these provisions will prevent any Person from exercising undue control over ISE Stock, LLC and will protect the ability of ISE, as well as other investors, to exercise their full ownership rights. By specifically imposing a Voting Limitation on any Person that owns Units which represent in the aggregate more than twenty percent (20%) of the voting power then entitled to be cast, ISE would ensure that it is in all cases, able to maintain proper control over the exercise of its regulatory function in relation to ISE Stock, LLC, and is not subject to influence that may be adverse to its regulatory responsibilities from any Person who may own a substantial number of the outstanding Units. This provision and other related provisions relating to notice and rule filing requirements with respect to any Person who acquires certain Percentage Interest [17] levels in ISE Stock would

[15] August 2nd Telephone Conference (clarifying that sentence relates to ISE Stock, LLC and not ISE).

[16] August 2nd Telephone Conference (clarifying that ISE as an SRO has the responsibilities under 6(b)(5) of the Act and not ISE Stock, LLC and clarifying ISE's interpretation of Section 8.2(d)(vii) of the LLC Agreement). Section 8.2(d)(vii) of the LLC Agreement states that Advisory Board members shall comply with the Federal securities laws and the rules and regulations thereunder and shall cooperate with ISE and the Commission pursuant to their respective regulatory authority. ISE interprets this to mean that Advisory Board members must take into consideration and facilitate ISE's responsibilities under section 6(b)(5) of the Act.

[17] ''Percentage Interest'' shall mean (i) As of any time when the number of outstanding Class B Units does not exceed 49, (x) with respect to the Class B Units one percent (1%) (or fraction thereof) as to each Unit (or fraction thereof) held by such holder of Class B Units and (y) as to the holders of Class A Units, in the aggregate, 100% less the aggregate Percentage Interest of holders of Class B Units as of such time; and as to each holder of a Class A Unit, the product of (x) the aggregate Percentage Interest of all holders of Class A Units and (y) a fraction, whose numerator is the number of Class A Units then held by such holder and whose denominator is the number of Class A Units then held by all holders of Class A Units; and (ii) as of any time when the number of outstanding Class B Units exceeds 49, as to each holder of a Class A

Continued

serve to protect the integrity of ISE's self-regulatory responsibilities.

Ownership Limitations of Members and Changes in Ownership

Under Section 9.2(a) of the LLC Agreement, no Person (other than ISE), either alone or together with its Related Persons, at any time, may own, directly or indirectly, of record or beneficially, an aggregate amount of Units which would result in more than twenty percent (20%) Percentage Interest level in ISE Stock, LLC (the ''Concentration Limitation''). Any transfer of Units that result in the acquisition and holding by any Person, alone or together with its Related Persons, of an aggregate Percentage Interest level which crosses the threshold level of twenty percent (20%) is subject to the rule filing process pursuant to Section 19 of the Act. Furthermore, any transfer of Units that results in a reduction of ISE's Percentage Interest level of Class A Units or Precentage Interest level in ISE Stock, LLC below the twenty percent (20%) threshold is subject to the rule filing process pursuant to section 19 of the Act.[18]

The limitations imposed by Sections 9.2(a) may be waived by the Manager, if in its sole discretion, it consented to expressly permit such waiver of the Concentration Limitation; and such waiver shall have been filed with, and approved by, the Commission under section 19(b) of the Act and shall have become effective thereunder. In granting a waiver, the Manager must have determined that: (i) Such beneficial ownership of Units by such Person, either alone or together with its Related Persons, will not impair the ability of ISE Stock, LLC and the Manager to carry out its functions and responsibilities, including but not limited to, under the Act, is otherwise in the best interests of ISE Stock, LLC and its Members; (ii) such beneficial ownership of Units by such Person, either alone or together with its Related Persons, will not impair the ability of the Commission to enforce the Act; (iii) neither such Person nor its Related Persons are subject to any applicable ''statutory disqualification'' (within the meaning of Section 3(a)(39) of the Act); and (iv) neither such Person nor its Related Persons is an ''Exchange Member'' (as such term is defined in the Constitution of ISE).

ISE believes that these provisions provide the Commission with the authority to review and subject to public comment any substantial transfer of ownership which the Commission may deem to have the potential to affect the ISE's self-regulatory responsibilities regarding its proposed ISE Stock facility.

Under Section 9.1, no Member may sell, assign, pledge or in any manner dispose of or create or suffer the creation of a security interest in or any encumbrance on all or a portion of its Units in the Company (the commission of any such act being referred to as a ''Transfer'', any person who effects a Transfer being referred to as a ''Transferor'' and any person to whom a Transfer is effected being referred to as a ''Transferee'') except in accordance with the terms and conditions set forth in Article 9 of the LLC Agreement. Any Transfer or purported Transfer of a Unit in ISE Stock, LLC not made in accordance with the LLC Agreement shall be null and void and of no force or effect whatsoever.

Section 9.3 provides that a Member may not Transfer all or any portion of its Units in ISE Stock, LLC to any Person without the consent of the Manager, which consent may be given or withheld in the Manager's sole discretion; provided, that, subject to Section 9.10 of the LLC Agreement, a Member may transfer all or a portion of its Units in ISE Stock, LLC to one or more of its Permitted Transferees[19] without the consent of the Manager or any other Member.[20]

Under Section 9.11, unless a Transferee of a Member's Units becomes a Substituted Member,[21] such Transferee shall have no right to obtain or require any information or account of ISE Stock, LLC transactions, or to inspect ISE Stock, LLC's books or to vote on ISE Stock, LLC matters. Furthermore, any successor or Transferee under the LLC Agreement shall be subject to and bound by the LLC Agreement as if originally a party to the LLC Agreement.

ISE believes that these transfer restrictions, together with the Voting Limitation and Concentration Limitation, are adequately designed to prohibit any Person, either alone or with its Related Persons, from having the power to control a substantial number of outstanding votes entitled to be cast on any matter, and more importantly, that may be adverse to ISE's regulatory oversight responsibilities. Moreover, ISE believes that these provisions serve to protect the integrity of ISE's and the Commission's regulatory oversight responsibilities and allows the Commission to review, and subject to public notice and comment, the acquisition of substantial ownership or voting power by any Member.

Regulatory Jurisdiction Over Members

Under Section 6.1(b), each Member acknowledges that to the extent that they relate to the business of ISE Stock, LLC, the books, records, premises, officers, directors, agents and employees of Members shall be deemed to be the books, records, premises, officers, directors, agents and employees of ISE Stock, LLC for purposes of and subject to oversight pursuant to the Act. Furthermore,[22] the books, records, premises, officers, directors, agents and employees of ISE Stock, LLC shall be deemed to be the books, records, premises, officers, directors, agents and employees of ISE for purposes of and subject to oversight pursuant to the Act. In addition, the books and records of ISE Stock, LLC will be kept within the U.S.[23]

Unit or Class B Unit, the percentage equivalent of a fraction whose numerator is the number of Units held by such holder and whose denominator is the aggregate number of Units outstanding. LLC Agreement Section 2.1 ''Definitions.''

[18] Telephone conference between Michou H.M. Nguyen, Special Counsel, Division, Commission, and Tracy Tang, Assistant General Counsel, Exchange, on August 1, 2006. *See also* LLC Agreement, Section 9.2(d).

[19] ''Permitted Transferee'' means, with respect to another Person, (i) Any Person directly or indirectly owning, controlling or holding with power to vote 80% or more of the outstanding voting securities of and equity or beneficial interests in such other Person, (ii) any Person 80% or more of whose outstanding voting securities and equity or beneficial interests are directly or indirectly owned, controlled or held with power to vote by such other Person, (iii) any Person 80% or more of whose outstanding voting securities and equity or other beneficial interests are directly or indirectly owned, controlled or held with power to vote by a Person directly or indirectly owning, controlling or holding with power to vote 80% or more of the outstanding voting securities and equity or other beneficial interests of such other Person with whom affiliate status is being tested, (iv) any Family Members or Family Trusts of such Person and (v) any Member. LLC Agreement Section 2.1 ''Definitions.''

''Family Members'' means, with respect to any natural Person, such Person's spouse, children, parents and lineal descendants of such Person's parents. LLC Agreement Section 2.1 ''Definitions.''

''Family Trusts'' means, with respect to any natural Person, a trust benefiting solely such Person or the Family Members of such Person. LLC Agreement Section 2.1 ''Definitions.''

[20] If a Member transfers all of its Unit, whether or not the transfer is to a Related Person, such transfer must first be approved by the Manager. Telephone conference between Michou H.M. Nguyen, Special Counsel, Division, Commission, and Tracy Tang, Assistant General Counsel, Exchange, on August 1, 2006 (clarifying the additional restriction on transfers applicable when all of a Member's interest is purported to be transferred). *See also* LLC Agreement, Section 9.3(c).

[21] ''Substituted Member'' means any Person admitted to the Company as a substituted Member pursuant to the provisions of Article 9. LLC Agreement Section 2.1 ''Definitions.''

[22] August 2nd Telephone Conference (conforming purpose section to text of LLC Agreement).

[23] LLC Agreement, Section 6.1(a).

Section 13.1(a) of the LLC Agreement generally provides that a Member may not disclose any confidential information of ISE Stock or of any other Members to any persons, except as expressly provided by the LLC Agreement. However, Section 13.1(a) provides exceptions for, among other things, disclosure required by the Federal securities laws and any other applicable self-regulatory organization, or in response to a request by the Commission pursuant to the Act or by ISE. In addition, confidential information pertaining to the self-regulatory function of ISE (including but not limited to disciplinary matters, trading data, trading practices and audit information) contained in the books and records of ISE Stock, LLC shall: (i) Not be made available to any persons (other than as provided in the next sentence) other than to those officers, directors, employees, and agents of ISE Stock, LLC that have a reasonable need to know the contents thereof; (ii) be retained in confidence by ISE Stock, LLC and the officers, directors, employees and agents of ISE Stock, LLC; and (iii) not be used for any commercial purposes.[24] Nothing in the LLC Agreement shall be interpreted as to limit or impede the rights of the Commission or ISE to access and examine such confidential information pursuant to the Federal securities laws and the rules and regulations thereunder, or to limit or impede the ability of any Member or any officers, directors, employees or agents of ISE Stock, LLC or any Member to disclose such confidential information to the Commission or ISE.[25]

ISE believes that these provisions would help to ensure access to ISE's books and records by the Commission, and would help enable the Commission to carry out its regulatory responsibilities regarding ISE.[26]

Under Section 6.1(c) of the LLC Agreement, ISE Stock, LLC, its Members, and officers, directors, agents, and employees of ISE Stock, LLC and its Members irrevocably submit to the jurisdiction of the U.S. Federal courts, the Commission and ISE, for the purposes of any suit, action or proceeding pursuant to the U.S. Federal securities laws, the rules or regulations thereunder, directly arising out of, or relating to, ISE Stock, LLC activities or Section 6.1 of the LLC Agreement (except that such jurisdictions shall also include Delaware for any such matter relating to the organizational or internal affairs of ISE Stock, LLC), and hereby waives, and agrees not to assert by way of motion, as a defense or otherwise in any such suit, action or proceeding, any claims that it is not personally subject to the jurisdiction of the Commission, that the suit, action or proceeding is an inconvenient forum or that the venue of the suit, action or proceeding is improper, or that the subject matter hereof may not be enforced in or by such courts or agency.[27]

Under Section 6.1(d) of the LLC Agreement, ISE Stock, LLC, its Members, the officers, directors, agents, and employees of ISE Stock, LLC and its Members agree to comply with the Federal securities laws and the rules and regulations thereunder and shall cooperate with ISE and the Commission pursuant to their respective regulatory authority and the provisions of the LLC Agreement; and to engage in conduct that fosters and does not interfere with ISE Stock, LLC's ability to prevent fraudulent and manipulative acts and practices; to promote just and equitable principles of trade; to foster cooperation and coordination with persons engaged in regulating, clearing, settling, processing information with respect to, and facilitating transactions in securities; to remove impediments to and perfect the mechanisms of a free and open market and a national market system; and, in general, to protect investors and the public interest.[28]

Section 6.1(e) provides that ISE Stock, LLC and each Member shall take such action as is necessary to ensure that its respective officers, directors, agents, and employees consent in writing to the application to them of the applicable provisions of Section 6.1 with respect to their ISE Stock, LLC-related activities.[29]

The Exchange believes that these provisions will serve as notice to Members that they will be subject to the jurisdiction of the U.S. Federal courts, the Commission and the ISE. While Members may represent a diverse group of business interests, the ISE believes that it is imperative that regulatory cooperation is assured from all Members, regardless of each Member's business location, country of domicile or other circumstance which the Commission may deem to have the potential to be adverse to the regulatory responsibilities and interests of the ISE, the Commission, or the U.S. Federal courts. Accordingly, these provisions ensure that, should an occasion arise which requires regulatory cooperation or jurisdictional submission from ISE Stock, LLC or a Member, it will be forthcoming and uncontested.

Under Section 7.1(b) of the LLC Agreement, the Manager, may, after appropriate notice and opportunity for hearing, suspend or terminate a Member's voting privilege or membership: (i) In the event such Member has violated a provision of this Agreement, any Federal or state securities law, (ii) such Member or its Related Persons are subject to any applicable ''statutory disqualification'' (within the meaning of section 3(a)(39) of the Act); or (iii) if the Manager determines that such action is necessary or appropriate in the public interest or for the protection of investors.

ISE believes that this provision would require Members, regardless of the nature of their association with ISE, to adhere to regulatory responsibilities in that they must comply with Federal securities laws and the rules and regulations thereunder, and cooperate with the Commission and ISE pursuant to their regulatory authority or face severe consequences such as termination of voting rights or ownership. In addition, Members would be required to take into consideration and facilitate ISE's and ISE Stock's ability to comply with the requirements under section 6(b)(5) of the Act.[30]

Fair Representation of Trading Participants, or EAMs

The Exchange believes that the ISE Stock corporate structure assures the fair representation of its members, or trading participants, in the selection of its directors and administration of its affairs, and satisfies Commission requirements in that one or more directors shall be representative of issuers and investors and not be associated with a member of the exchange, broker, or dealer.

The Exchange notes that Members of (or holders of Units in) ISE Stock, LLC are not automatically entitled to trading privileges on ISE Stock, nor is the purchase of Units a pre-requisite for

[24] LLC Agreement, Section 13.1(b).

[25] LLC Agreement, Section 13.1(c). August 2nd Telephone Conference (conforming purpose section to text of LLC Agreement).

[26] August 2nd Telephone Conference (conforming purpose section to text of LLC Agreement).

[27] Telephone conference between Michou H.M. Nguyen, Special Counsel, Division, Commission, and Tracy Tang, Assistant General Counsel, Exchange, on August 1, 2006 (conforming purpose section to text of LLC Agreement).

[28] *Id.*

[29] *Id.*

[30] August 2nd Telephone Conference (clarifying that ISE as an SRO has the responsibilities under 6(b)(5) of the Act and not ISE Stock, LLC and clarifying ISE's interpretation of Section 6.1(d) of the LLC Agreement). Section 6.1(d) of the LLC Agreement states that Members shall comply with the Federal securities laws and the rules and regulations thereunder and shall cooperate with ISE and the Commission pursuant to their respective regulatory authority. ISE interprets this to mean that Members must take into consideration and facilitate ISE's responsibilities under section 6(b)(5) of the Act.

exercising trading privileges on ISE Stock. Rather, in order to exercise trading privileges on ISE Stock, a broker-dealer must be an approved EAM of ISE. There is only one type of EAM membership for both options trading on ISE and equities trading on ISE Stock. When an applicant is approved under ISE rules as an EAM, the member is issued one share of Class B Common Stock, Series B–3 (a ''B–3 Share''). Under the ISE Constitution, holders of B–3 Shares, or EAMs, have the right to elect two members (the ''B–3 Directors'') of the Board of Directors of ISE (the ''ISE Board''). Nominees for election to the ISE Board to serve as Industry Directors, including B–3 Directors, are currently made by the Exchange's Nominating Committee, which is not a committee of the ISE Board, and is comprised of representatives of the holders of each series of Class B Common Stock. Stockholders also may nominate Industry Director candidates for election to the ISE Board by petition. Accordingly, since trading participants on ISE Stock must be EAMs, and since EAMs have the right to elect B–3 Directors of the ISE Board, the Exchange believes that ISE Stock trading participants are fairly represented on the ISE Board. Additionally, as a result of ISE's stated strategy of selling Units to entities that will support trading on ISE Stock, trading participants will have representation via the ISE Stock, LLC Advisory Board.

The Exchange proposes to modify the language in Rule 312 (Limitation on Affiliation between the Exchange and Members) to clarify that this provision covers not only the Exchange, but the ISE Stock Exchange LLC, as a facility of the ISE, as well.

Reorganization Into a Holding Company Structure

Finally, the Exchange notes that it intends to reorganize into a holding company structure on September 1, 2006, in the manner described in Securities Exchange Act Release No. 53705 (April 21, 2006) (SR–ISE–2006–04) (the ''Reorganization'').[31] Upon the Reorganization, International Securities Exchange, LLC shall become the registered ''national securities exchange'' under section 6 of the Act, the SRO and Manager of ISE Stock, LLC. International Securities Exchange Holdings, Inc. (''ISE Holdings'') shall become the holder of the Class A Units of ISE Stock, LLC.

Prior to the Reorganization, the provisions relating to, among other things, ownership and voting limitations (and exceptions therefrom) are applicable to ISE, as the holder of the Class A Units. Upon the Reorganization, those same provisions are applicable to ISE Holdings, as the holder of the Class A Units. The Exchange believes that applying the exceptions to the ownership and voting limitations to ISE Holdings following the Reorganization is (i) Reasonable, as International Securities Exchange, LLC, the SRO, will be a wholly-owned subsidiary of ISE Holdings, and (ii) consistent with the provisions of the LLC Agreement that prevent any Person from exercising undue control over ISE Stock, LLC, as the Certificate of Incorporation and by-laws of ISE Holdings include substantially similar ownership and voting limitations (see, for example, Article Fourth, Subdivision III(a) and (b) of the ISE Holdings Certificate of Incorporation).

2. Statutory Basis

ISE believes the proposal is consistent with the requirements of the Act and the rules and regulations promulgated thereunder that are applicable to a national securities exchange, and in particular, with section 6(b) of the Act.[32] ISE believes that the proposal is consistent with section 6(b)(5) of the Act[33] in that it is designed to prevent fraudulent and manipulative acts and practices, to promote just and equitable principles of trade, to remove impediments to and perfect the mechanism for a free and open market and a national market system, and, in general, to protect investors and the public interest. In particular, the ISE believes that the proposal is designed to enable it to promote competition in the trading of equity securities through establishing a new marketplace.

B. Self-Regulatory Organization's Statement on Burden on Competition

The Exchange does not believe that the proposed rule change will impose any burden on competition that is not necessary or appropriate in furtherance of the purposes of the Act.

C. Self-Regulatory Organization's Statement on Comments on the Proposed Rule Change Received From Members, Participants or Others

The Exchange has not solicited, and does not intend to solicit, comments on this proposed rule change. The Exchange has not received any unsolicited written comments on this proposal from members, participants, or others.

III. Date of Effectiveness of the Proposed Rule Change and Timing for Commission Action

Within 35 days of the date of publication of this notice in the **Federal Register** or within such longer period (i) As the Commission may designate up to 90 days of such date if it finds such longer period to be appropriate and publishes its reasons for so finding, or (ii) as to which the Exchange consents, the Commission will:

A. By order approve the proposed rule change or

B. Institute proceedings to determine whether the proposed rule change should be disapproved.

IV. Solicitation of Comments

Interested persons are invited to submit written data, views, and arguments concerning the foregoing, including whether the proposed rule change is consistent with the Act. Comments may be submitted by any of the following methods:

Electronic Comments

- Use the Commission's Internet comment form (*http://www.sec.gov/rules/sro.shtml*); or
- Send an e-mail to *rule-comments@sec.gov.* Please include File Number SR–ISE–2006–45 on the subject line.

Paper Comments

- Send paper comments in triplicate to Nancy M. Morris, Secretary, Securities and Exchange Commission, 100 F Street, NE, Washington, DC 20549–1090.

All submissions should refer to File Number SR–ISE–2006–45. This file number should be included on the subject line if e-mail is used. To help the Commission process and review your comments more efficiently, please use only one method. The Commission will post all comments on the Commission's Internet Web site (*http://www.sec.gov/rules/sro.shtml*). Copies of the submission, all subsequent amendments, all written statements with respect to the proposed rule change that are filed with the Commission, and all written communications relating to the proposed rule change between the Commission and any person, other than those that may be withheld from the public in accordance with the provisions of 5 U.S.C. 552, will be available for inspection and copying in the Commission's Public Reference

[31] *See* Securities Exchange Act Release No. 53705 (April 21, 2006), 71 FR 25260 (April 28, 2006) (SR–ISE–2006–04).

[32] 15 U.S.C. 78f(b).

[33] 15 U.S.C. 78f(b)(5).

Room. Copies of the filing also will be available for inspection and copying at the principal office of the Exchange. All comments received will be posted without change; the Commission does not edit personal identifying information from submissions. You should submit only information that you wish to make available publicly. All submissions should refer to File Number SR–ISE–2006–45 and should be submitted on or before August 31, 2006.

For the Commission, by the Division of Market Regulation, pursuant to delegated authority.[34]

Nancy M. Morris,

Secretary.

[FR Doc. E6–13005 Filed 8–9–06; 8:45 am]

BILLING CODE 8010–01–P

SECURITIES AND EXCHANGE COMMISSION

[Release No. 34–54270; File No. SR–ISE–2006–34]

Self-Regulatory Organizations; International Securities Exchange, Inc.; Notice of Filing and Immediate Effectiveness of Proposed Rule Change and Amendment No. 1 Thereto Relating to Rule 1406, Regulatory Cooperation

August 3, 2006.

Pursuant to Section 19(b)(1) of the Securities Exchange Act of 1934 (''Act''),[1] and Rule 19b–4 thereunder,[2] notice is hereby given that on May 31, 2006, the International Securities Exchange, Inc. (''Exchange'' or ''ISE'') filed with the Securities and Exchange Commission (''Commission'') the proposed rule change as described in Items I and II below, which Items have been prepared by the Exchange. On July 7, 2006, ISE filed Amendment No. 1 to the proposed rule change. The Exchange filed the proposed rule change as a ''non-controversial'' rule change under Rule 19b–4(f)(6) under the Act,[3] which rendered the proposal effective upon filing with the Commission. The Commission is publishing this notice to solicit comments on the proposed rule change, as amended, from interested persons.

I. Self-Regulatory Organization's Statement of the Terms of Substance of the Proposed Rule Change

The Exchange proposes to amend ISE Rule 1406, Regulatory Cooperation, to clarify that the Exchange may contract with another self-regulatory organization (''SRO'') for the performance of certain regulatory functions. The text of the proposed rule change is available on ISE's Web site, *http://www.iseoptions.com*, at ISE's Office of the Secretary, and at the Commission's Public Reference Room.

II. Self-Regulatory Organization's Statement of the Purpose of, and Statutory Basis for, the Proposed Rule Change

In its filing with the Commission, the Exchange included statements concerning the purpose of, and basis for, the proposed rule change and discussed any comments it received on the proposed rule change. The text of these statements may be examined at the places specified in Item IV below. The Exchange has prepared summaries, set forth in Sections A, B, and C below, of the most significant aspects of such statements.

A. Self-Regulatory Organization's Statement of the Purpose of, and Statutory Basis for, the Proposed Rule Change

1. Purpose

ISE Rule 1406 allows the Exchange to enter into agreements with domestic and foreign SROs, associations and contract markets and the regulators of such markets for the exchange of information and other regulatory purposes. The Exchange proposes to amend ISE Rule 1406 to specify that the Exchange may contract with another SRO for the performance of certain of ISE's regulatory functions.[4] ISE states that such regulatory services agreements could enhance ISE's ability to carry out its regulatory obligations under the Act.

This rule change would have immediate applicability with respect to a regulatory services agreement (''RSA'') between ISE, the Chicago Board Options Exchange, Incorporated (''CBOE''), and other options markets participating in the Options Regulatory Surveillance Authority national market system plan (''ORSA''). ISE has determined that to best discharge its SRO responsibilities, it will contract with CBOE, which is subject to Commission oversight pursuant to sections 6 and 19 of the Act,[5] for CBOE to provide certain regulatory services to ISE, as set forth in the ORSA RSA. In performing services under the ORSA RSA, CBOE will be operating pursuant to the statutory SRO responsibilities of ISE under Sections 6 and 19, as well as performing for itself its own SRO responsibilities.

According to the proposed rule change, ISE remains an SRO registered under Section 6 of the Act[6] under any agreement for regulatory services with another SRO and, therefore, continues to have statutory authority and responsibility for enforcing compliance by its members, and persons associated with its members, with the Act, the rules thereunder, and the rules of the Exchange. The proposed rule change specifically states that any action taken by another SRO, or its employees or authorized agents, operating on behalf of ISE pursuant to a regulatory services agreement with ISE, will be deemed an action taken by ISE. Under any agreement for regulatory services with another SRO, ISE retains ultimate responsibility for performance of its SRO duties, and the proposed rule change states that ISE shall retain ultimate legal responsibility for, and control of, its SRO responsibilities.

2. Statutory Basis

The Exchange believes that the proposed rule change furthers the objectives of section 6(b)(5) of the Act,[7] in that it is designed to prevent fraudulent and manipulative acts and practices, to promote just and equitable principles of trade, to foster cooperation and coordination with persons engaged in regulating, clearing, settling, processing information with respect to, and facilitating transactions in securities, to remove impediments to and perfect the mechanism of a free and open market and a national market system, and, in general, to protect investors and the public interest. In particular, the proposal specifies in the Exchange's rules that the Exchange may enter into regulatory services agreements, which the ISE believes could enhance the Exchange's regulatory program.

B. Self-Regulatory Organization's Statement on Burden on Competition

The Exchange does not believe that the proposed rule change will impose any burden on competition that is not necessary or appropriate in furtherance of the purposes of the Act.

[34] 17 CFR 200.30–3(a)(12).

[1] 15 U.S.C. 78s(b)(1).

[2] 17 CFR 240.19b–4.

[3] 17 CFR 240.19b–4(f)(6).

[4] The Exchange states that the proposed rule change is identical to rule changes recently adopted by other options markets. *See, e.g.*, Securities Exchange Act Release No. 53832 (May 18, 2006), 71 FR 30007 (May 24, 2006) (SR–CBOE–2006–46).

[5] 15 U.S.C. 78f and 15 U.S.C. 78s.

[6] 15 U.S.C. 78f.

[7] 15 U.S.C. 78f(b)(5).

C. Self-Regulatory Organization's Statement on Comments on the Proposed Rule Change Received From Members, Participants or Others

The Exchange has neither solicited nor received written comments on the proposed rule change.

III. Date of Effectiveness of the Proposed Rule Change and Timing for Commission Action

Because the proposed rule change: (i) Does not significantly affect the protection of investors or the public interest; (ii) does not impose any significant burden on competition; and (iii) by its terms, does not become operative for 30 days after the date of filing, or such shorter time as the Commission may designate, if consistent with the protection of investors and the public interest, the proposed rule change has become effective pursuant to section 19(b)(3)(A) of the Act [8] and subparagraph (f)(6) of Rule 19b–4 thereunder.[9] The Exchange has requested that the Commission waive the 30-day operative delay period for ''non-controversial'' proposals and make the proposed rule change effective and operative upon filing. The Commission hereby grants the request. The Commission believes that waiver of the 30-day operative delay is consistent with the protection of investors and the public interest. In this regard, the Commission believes that the proposal should be implemented without delay because of its immediate applicability with respect to the RSA among ISE, CBOE and the other ORSA participants.[10] For this reason, the Commission designates the proposal to be effective and operative upon filing with the Commission.

At any time within 60 days of the filing of the proposed rule change, the Commission may summarily abrogate such rule change if it appears to the Commission that such action is necessary or appropriate in the public interest, for the protection of investors, or otherwise in the furtherance of the purposes of the Act.[11]

[8] 15 U.S.C. 78s(b)(3)(A).

[9] 17 CFR 240.19b–4(f)(6).

[10] The Commission notes that the proposed rule change is based on a similar rule of the Boston Stock Exchange, Inc. *See* Securities Exchange Act Release No. 53436 (March 7, 2006), 71 FR 13194 (March 14, 2006) (SR–BSE–2006–08).

[11] *See* 15 U.S.C. 78s(b)(3)(C). For purposes of calculating the 60-day period within which the Commission may summarily abrogate the proposed rule change, as amended, under Section 19(b)(3)(C) of the Act, the Commission considers the period to commence on July 7, 2006, the date on which the Exchange submitted Amendment No. 1.

IV. Solicitation of Comments

Interested persons are invited to submit written data, views, and arguments concerning the foregoing, including whether the proposed rule change is consistent with the Act. Comments may be submitted by any of the following methods:

Electronic Comments

- Use the Commission's Internet comment form (*http://www.sec.gov/rules/sro.shtml*); or
- Send an e-mail to *rule-comments@sec.gov.* Please include File Number SR–ISE–2006–34 on the subject line.

Paper Comments

- Send paper comments in triplicate to Nancy M. Morris, Secretary, Securities and Exchange Commission, 100 F Street, NE., Washington, DC 20549–1090.

All submissions should refer to File Number SR–ISE–2006–34. This file number should be included on the subject line if e-mail is used. To help the Commission process and review your comments more efficiently, please use only one method. The Commission will post all comments on the Commission's Internet Web site (*http://www.sec.gov/rules/sro.shtml*). Copies of the submission, all subsequent amendments, all written statements with respect to the proposed rule change that are filed with the Commission, and all written communications relating to the proposed rule change between the Commission and any person, other than those that may be withheld from the public in accordance with the provisions of 5 U.S.C. 552, will be available for inspection and copying in the Commission's Public Reference Room. Copies of such filing also will be available for inspection and copying at the principal office of the Exchange. All comments received will be posted without change; the Commission does not edit personal identifying information from submissions. You should submit only information that you wish to make available publicly. All submissions should refer to File Number SR–ISE–2006–34 and should be submitted on or before August 31, 2006.

For the Commission, by the Division of Market Regulation, pursuant to delegated authority.[12]

Nancy M. Morris,

Secretary.

[FR Doc. E6–13006 Filed 8–9–06; 8:45 am]

BILLING CODE 8010–01–P

[12] 17 CFR 200.30–3(a)(12).

SECURITIES AND EXCHANGE COMMISSION

[Release No. 34–54271; File No. SR–NASDAQ–2006–027]

Self-Regulatory Organizations; The NASDAQ Stock Market LLC; Notice of Filing and Immediate Effectiveness of Proposed Rule Change To Modify the Date for Compliance With Regulation NMS

August 3, 2006.

Pursuant to Section 19(b)(1) of the Securities Exchange Act of 1934 (''Act''),[1] and Rule 19b–4 thereunder,[2] notice is hereby given that on August 2, 2006, The NASDAQ Stock Market LLC (''Nasdaq'') filed with the Securities and Exchange Commission (''Commission'') the proposed rule change as described in Items I and II below, which Items have been prepared by Nasdaq. Nasdaq has filed the proposal pursuant to Section 19(b)(3)(A) of the Act [3] and Rule 19b–4(f)(6) thereunder,[4] which renders the proposal effective upon filing with the Commission. The Commission is publishing this notice to solicit comments on the proposed rule change from interested persons.

I. Self-Regulatory Organization's Statement of the Terms of Substance of the Proposed Rule Change

Nasdaq proposes to modify the date upon which its execution systems would be in compliance with Regulation NMS under the Act (''Regulation NMS''). The text of the proposed rule change is available on Nasdaq's Web site at *http://www.nasdaq.com*, at the principal office of Nasdaq, and at the Commission's Public Reference Room.

II. Self-Regulatory Organization's Statement of the Purpose of, and Statutory Basis for, the Proposed Rule Change

In its filing with the Commission, Nasdaq included statements concerning the purpose of and basis for the proposed rule change and discussed any comments it received on the proposed rule change. The text of these statements may be examined at the places specified in Item IV below. Nasdaq has prepared summaries, set forth in sections A, B, and C below, of the most significant aspects of such statements.

[1] 15 U.S.C. 78s(b)(1).

[2] 17 CFR 240.19b–4.

[3] 15 U.S.C. 78s(b)(3)(A).

[4] 17 CFR 240.19b–4(f)(6).

A. Self-Regulatory Organization's Statement of the Purpose of, and Statutory Basis for, the Proposed Rule Change

1. Purpose

Nasdaq proposes to modify certain of its rules that become effective upon the compliance date for Regulation NMS. In a previous proposal, Nasdaq had listed the compliance date as May 21, 2007,[5] the date established by the Commission for full industry compliance.[6] The Commission has established February 5, 2007, as the date of compliance for all automated trading centers such as Nasdaq. Accordingly, Nasdaq is proposing to modify its approved rules to demonstrate compliance with Regulation NMS by February 5, 2007, to conform with the Commission's scheduled compliance date.

2. Statutory Basis

Nasdaq believes that the proposed rule change is consistent with the provisions of Section 6 of the Act,[7] in general, and with Sections 6(b)(5) of the Act,[8] in particular, in that the proposal is designed to prevent fraudulent and manipulative acts and practices, to promote just and equitable principles of trade, to foster cooperation and coordination with persons engaged in regulating, clearing, settling, processing information with respect to, and facilitating transactions in securities, to remove impediments to and perfect the mechanism of a free and open market and a national market system, and, in general, to protect investors and the public interest. Nasdaq believes that the proposed rule change clarifies certain terms in Nasdaq's rules.

B. Self-Regulatory Organization's Statement on Burden on Competition

Nasdaq does not believe that the proposed rule change will result in any burden on competition that is not necessary or appropriate in furtherance of the purposes of the Act.

C. Self-Regulatory Organization's Statement on Comments on the Proposed Rule Change Received From Members, Participants or Others

Written comments were neither solicited nor received.

[5] *See* Securities Exchange Act Release No. 54155 (July 14, 2006), 71 FR 41291 (July 20, 2006).

[6] *See* Securities Exchange Act Release No. 53829 (May 18, 2006), 71 FR 30038 (May 24, 2006).

[7] 15 U.S.C. 78f.

[8] 15 U.S.C. 78f(b)(5).

III. Date of Effectiveness of the Proposed Rule Change and Timing for Commission Action

The foregoing proposed rule change is subject to Section 19(b)(3)(A)(iii) of the Act[9] and Rule 19b–4(f)(6) thereunder[10] because the proposal: (i) Does not significantly affect the protection of investors or the public interest; (ii) does not impose any significant burden on competition; and (iii) does not become operative prior to 30 days after the date of filing or such shorter time as the Commission may designate if consistent with the protection of investors and the public interest; provided that Nasdaq has given the Commission notice of its intent to file the proposed rule change, along with a brief description and text of the proposed rule change, at least five business days prior to the date of filing of the proposed rule change, or such shorter time as designated by the Commission.

Nasdaq has requested that the Commission waive the five-day pre-filing requirement and the 30-day pre-operative delay. Nasdaq believes that the filing may appropriately be designated as ''non-controversial'' because the filing would conform certain of Nasdaq's rules to changes made in Regulation NMS. Accordingly, Nasdaq believes that its proposal should become immediately effective and the Commission should grant Nasdaq's request to waive the 5-day pre-filing requirement and the 30-day pre-operative waiting period. The Commission believes that waiving the five-day pre-filing requirement and the 30-day pre-operative delay is consistent with the protection of investors and the public interest because such waiver would permit Nasdaq to clarify the proposed rule change prior to the launch of Nasdaq's new integrated system, Single Book. For this reason, the Commission designates the proposed rule change to be effective and operative upon filing with the Commission.[11]

At any time within 60 days of the filing of such proposed rule change the Commission may summarily abrogate such rule change if it appears to the Commission that such action is necessary or appropriate in the public interest, for the protection of investors or otherwise in furtherance of the purposes of the Act.

[9] 15 U.S.C. 78s(b)(3)(A)(iii).

[10] 17 CFR 240.19b–4(f)(6).

[11] For the purposes only of waiving the 30-day pre-operative delay, the Commission has considered the proposed rule's impact on efficiency, competition, and capital formation. *See* 15 U.S.C. 78c(f).

IV. Solicitation of Comments

Interested persons are invited to submit written data, views, and arguments concerning the foregoing, including whether the proposed rule change is consistent with the Act. Comments may be submitted by any of the following methods:

Electronic Comments

- Use the Commission's Internet comment form (*http://www.sec.gov/rules/sro.shtml*); or
- Send an e-mail to *rule-comments@sec.gov.* Please include File Number SR–NASDAQ–2006–027 on the subject line.

Paper Comments

- Send paper comments in triplicate to Nancy M. Morris, Secretary, Securities and Exchange Commission, 100 F Street, NE., Washington, DC 20549–1090.

All submissions should refer to File Number SR–NASDAQ–2006–027. This file number should be included on the subject line if e-mail is used. To help the Commission process and review your comments more efficiently, please use only one method. The Commission will post all comments on the Commission's Internet Web site (*http://www.sec.gov/rules/sro.shtml*). Copies of the submission, all subsequent amendments, all written statements with respect to the proposed rule change that are filed with the Commission, and all written communications relating to the proposed rule change between the Commission and any person, other than those that may be withheld from the public in accordance with the provisions of 5 U.S.C. 552, will be available for inspection and copying in the Commission's Public Reference Room. Copies of the filing also will be available for inspection and copying at the principal office of Nasdaq. All comments received will be posted without change; the Commission does not edit personal identifying information from submissions. You should submit only information that you wish to make available publicly. All submissions should refer to File Number SR–NASDAQ–2006–027 and should be submitted on or before August 31, 2006.

For the Commission, by the Division of Market Regulation, pursuant to delegated authority.[12]

Nancy M. Morris,

Secretary.

[FR Doc. E6–13004 Filed 8–9–06; 8:45 am]

BILLING CODE 8010–01–P

SECURITIES AND EXCHANGE COMMISSION

[Release No. 34–54274; File No. SR–NASDAQ–2006–020]

Self-Regulatory Organizations; The NASDAQ Stock Market LLC; Notice of Filing and Immediate Effectiveness of a Proposed Rule Change to Clarify the Rules of the Nasdaq Global Select Market

August 3, 2006.

Pursuant to section 19(b)(1) of the Securities Exchange Act of 1934 (''Act''),[1] and Rule 19b–4 thereunder,[2] notice is hereby given that on July 28, 2006, The NASDAQ Stock Market LLC (''Nasdaq'') filed with the Securities and Exchange Commission (''Commission'') the proposed rule change as described in Items I and II below, which Items have been prepared by Nasdaq. Nasdaq filed the proposal as a non-controversial rule change pursuant to section 19(b)(3)(A)(iii) of the Act[3] and Rule 19b–4(f)(6) thereunder,[4] which renders the proposal effective upon filing with the Commission. The Commission is publishing this notice to solicit comments on the proposed rule change from interested persons.

I. Self-Regulatory Organization's Statement of the Terms of Substance of the Proposed Rule Change

Nasdaq clarifies certain rules related to the Nasdaq Global Select Market and corrects a typographical error. The text of the proposed rule change is below. Proposed new language is *italicized;* proposed deletions are [bracketed].[5]

* * * * *

4425. Nasdaq Global Select Market

(a) An issuer that applies for listing on the [Nasdsaq] *Nasdaq* Global Market and meets the requirements for initial listing contained in Rule 4426 shall be listed on the Nasdaq Global Select Market.

(b)–(f) No change.

4426. Nasdaq Global Select Market Listing Requirements

(a) No change.

(b) Liquidity Requirements

(1) The security must demonstrate either:

(A)–(B) No change.

(C) a minimum of 450 beneficial shareholders, in the case of: (i) An issuer listing in connection with [its emergence from a bankruptcy or reorganization proceeding;] a court-approved reorganization under the federal bankruptcy laws or comparable foreign laws; or (ii) an issuer that is affiliated with another company listed on the Global Select Market.

(2) No change.

(3) The publicly held shares must have either:

(A)–(B) No change.

(C) a market value of at least $70 million in the case of: (i) An issuer listing in connection with its initial public offering; (ii) an issuer that is affiliated with, or a spin-off from, another company listed on the Global Select Market; and (iii) a closed end management investment company *registered under the Investment Company Act of 1940.*

(c)–(d) No change.

(e) Closed End Management Investment Companies.

(1) A closed end management investment company *registered under the Investment Company Act of 1940* shall not be required to meet paragraph (c) of this Rule 4426.

(2) In lieu of the requirement in paragraph (b)(3) of this Rule 4426, a closed end management investment company that is listed concurrently with other closed end management investment companies that have a common investment adviser [(]or whose investment advisers are ''affiliated persons,'' as defined in the Investment Company Act of 1940[)] (a ''Fund Family'') shall be eligible if: (A) the total market value of publicly held shares in such Fund Family is at least $220 million; (B) the average market value of publicly held shares for all funds in the Fund Family is $50 million; and (C) each fund in the Fund Family has a market value of publicly held shares of at least $35 million.

(f) No change.

* * * * *

II. Self-Regulatory Organization's Statement of the Purpose of, and Statutory Basis for, the Proposed Rule Change

In its filing with the Commission, Nasdaq included statements concerning the purpose of, and basis for, the proposed rule change and discussed any comments it received on the proposed rule change. The text of these statements may be examined at the places specified in Item IV below. Nasdaq has prepared summaries, set forth in Sections A, B, and C below, of the most significant aspects of such statements.

A. Self-Regulatory Organization's Statement of the Purpose of, and Statutory Basis for, the Proposed Rule Change

1. Purpose

Nasdaq recently created a new listing segment known as the Nasdaq Global Select Market. Issuers listed on the Nasdaq Global Select Market must meet higher initial listing requirements and will receive certain differentiated services from Nasdaq.[6] While Nasdaq originally filed the rules related to the Nasdaq Global Select Market as changes to Nasdaq Rules that will be operative once Nasdaq begins operations as a national securities exchange,[7] in order to implement the new segment on July 1, 2006, prior to Nasdaq's operation as an exchange, Nasdaq also filed these rules as changes to the rules of NASD (the ''NASD Filing'').[8] This filing incorporates into Nasdaq Rules certain clarifying changes made in the NASD Filing and corrects a typographical error.

2. Statutory Basis

Nasdaq believes that the proposed rule change is consistent with the provisions of section 6 of the Act,[9] in general, and section 6(b)(5) of the Act,[10] in particular, in that the proposal is designed to prevent fraudulent and manipulative acts and practices, to promote just and equitable principles of trade, to foster cooperation and coordination with persons engaged in regulating, clearing, settling, processing information with respect to, and facilitating transactions in securities, to remove impediments to and perfect the mechanism of a free and open market and a national market system, and, in

[12] 17 CFR 200.30–3(a)(12).

[1] 15 U.S.C. 78s(b)(1).

[2] 17 CFR 240.19b–4.

[3] 15 U.S.C. 78s(b)(3)(A)(iii).

[4] 17 CFR 240.19b–4(f)(6).

[5] Changes are marked to the rule text that appears in the electronic manual of Nasdaq found at *http://www.nasdaqtrader.com.*

[6] These differentiated services involve the provision of academic, research, and corporate governance materials and support that recognize the size and stature of companies on the Nasdaq Global Select Market. For example, companies on the Nasdaq Global Select Market may receive access to additional reports through Nasdaq's Market Intelligence Desk and Nasdaq Online, peer and industry information derived from surveys and third parties, and access to third-party research about their companies.

[7] *See* Securities Exchange Act Release No. 53799 (May 12, 2006), 71 FR 29195 (May 19, 2006) (SR–NASDAQ–2006–007).

[8] *See* Securities Exchange Act Release No. 54071 (June 29, 2006), 71 FR 38922 (July 10, 2006) (SR–NASD–2006–068).

[9] 15 U.S.C. 78f.

[10] 15 U.S.C. 78f(b)(5).

general, to protect investors and the public interest. Nasdaq believes that the proposed rule change clarifies certain terms in Nasdaq Rules.

B. Self-Regulatory Organization's Statement on Burden on Competition

Nasdaq does not believe that the proposed rule change will result in any burden on competition that is not necessary or appropriate in furtherance of the purposes of the Act.

C. Self-Regulatory Organization's Statement on Comments on the Proposed Rule Change Received From Members, Participants, or Others

Written comments were neither solicited nor received.

III. Date of Effectiveness of the Proposed Rule Change and Timing for Commission Action

The foregoing rule change has become effective pursuant to section 19(b)(3)(A)(iii) of the Act [11] and Rule 19b–4(f)(6) thereunder,[12] because it: (i) Does not significantly affect the protection of investors or the public interest; (ii) does not impose any significant burden on competition; and (iii) by its terms, does not become operative for 30 days after the date of the filing, or such shorter time as the Commission may designate if consistent with the protection of investors and the public interest.[13]

Nasdaq requests that the Commission waive the 30-day operative period under Rule 19b–4(f)(6)(iii).[14] The Commission believes that it is consistent with the protection of investors and the public interest to waive the 30-day operative delay and make this proposed rule change immediately effective upon filing on July 28, 2006, because the proposal merely incorporates certain clarifying changes made in the NASD Filing into Nasdaq Rules and corrects a typographical error.[15]

At any time within 60 days of the filing of such proposed rule change, the Commission may summarily abrogate such rule change if it appears to the Commission that such action is necessary or appropriate in the public interest, for the protection of investors, or otherwise in furtherance of the purposes of the Act.[16]

IV. Solicitation of Comments

Interested persons are invited to submit written data, views, and arguments concerning the foregoing, including whether the proposed rule change is consistent with the Act. Comments may be submitted by any of the following methods:

Electronic Comments

- Use the Commission's Internet comment form (*http://www.sec.gov/rules/sro.shtml*); or
- Send an E-mail to *rule-comments@sec.gov*. Please include File Number SR–NASDAQ–2006–020 on the subject line.

Paper Comments

- Send paper comments in triplicate to Nancy M. Morris, Secretary, Securities and Exchange Commission, Station Place, 100 F Street, NE., Washington, DC 20549–1090.

All submissions should refer to File Number SR–NASDAQ–2006–020. This file number should be included on the subject line if E-mail is used. To help the Commission process and review your comments more efficiently, please use only one method. The Commission will post all comments on the Commission's Internet Web site (*http://www.sec.gov/rules/sro.shtml*). Copies of the submission, all subsequent amendments, all written statements with respect to the proposed rule change that are filed with the Commission, and all written communications relating to the proposed rule change between the Commission and any person, other than those that may be withheld from the public in accordance with the provisions of 5 U.S.C. 552, will be available for inspection and copying in the Commission's Public Reference Room. Copies of such filing also will be available for inspection and copying at the principal office of Nasdaq. All comments received will be posted without change; the Commission does not edit personal identifying information from submissions. You should submit only information that you wish to make available publicly.

All submissions should refer to File Number SR–NASDAQ–2006–020 and should be submitted on or before August 31, 2006.

For the Commission, by the Division of Market Regulation, pursuant to delegated authority.[17]

Nancy M. Morris,

Secretary.

[FR Doc. E6–13024 Filed 8–9–06; 8:45 am]

BILLING CODE 8010–01–P

[11] 15 U.S.C. 78s(b)(3)(A)(iii).

[12] 17 CFR 240.19b–4(f)(6).

[13] As required by Rule 19b–4(f)(6)(iii) of the Act, Nasdaq provided the Commission with written notice of its intent to file the proposed rule change, along with a brief description of the text of the proposed rule change, at least five business days prior to the date of the filing of the proposed rule change.

[14] 17 CFR 240.19b–4(f)(6)(iii).

[15] For purposes only of waiving the 30-day operative delay of this proposal, the Commission has considered the proposed rule's impact on efficiency, competition, and capital formation. 15 U.S.C. 78c(f).

[16] *See* section 19(b)(3)(C) of the Act, 15 U.S.C. 78s(b)(3)(C).

[17] 17 CFR 200.30–3(a)(12).

SECURITIES AND EXCHANGE COMMISSION

[Release No. 34–54265; File No. SR–NASD–2006–064]

Self-Regulatory Organizations; National Association of Securities Dealers, Inc.; Notice of Filing of Proposed Rule Change and Amendment Nos. 1 and 2 Thereto Relating To Extension of Time Requests

August 2, 2006.

Pursuant to Section 19(b)(1) of the Securities Exchange Act of 1934 (''Act'') [1] and Rule 19b–4 thereunder,[2] notice is hereby given that on May 15, 2006, the National Association of Securities Dealers, Inc. (''NASD'') filed with the Securities and Exchange Commission (''SEC'' or ''Commission'') the proposed rule change as described in Items I, II, and III below, which Items have been prepared by NASD. On May 25, 2006, NASD filed Amendment No. 1 to the proposed rule change.[3] On July 25, 2006, NASD filed Amendment No. 2 to the proposed rule change.[4] The Commission is publishing this notice to solicit comments on the proposed rule change, as amended, from interested persons.

I. Self-Regulatory Organization's Statement of the Terms of Substance of the Proposed Rule Change

NASD is proposing to adopt new Rule 3160 to require (1) all clearing firm members for which NASD is the designated examining authority (''DEA'') pursuant to Rule 17d–1 under the Act to submit to NASD requests for extensions of time under Regulation T promulgated by the Federal Reserve Board (''FRB''), or pursuant to Rule 15c3–3(n) under the Act; and (2) each clearing firm member for which NASD is the DEA to file a monthly report with NASD indicating all broker-dealers for which it clears that have overall ratios

[1] 15 U.S.C. 78s(b)(1).

[2] 17 CFR 240.19b–4.

[3] In Amendment No. 1, NASD made non-substantive changes to the discussion of the purpose of the proposed rule change.

[4] Amendment No. 2 replaces and supersedes the original proposed rule filing and Amendment No. 1 in its entirety.

of requested extensions of time to total transactions for the month that exceed a percentage specified by NASD. Below is the text of the proposed rule change. Proposed new language is in *italics.*

* * * * *

3160. Extensions of Time Under Regulation T and SEC Rule 15c3–3

(a) When NASD is the designated examining authority pursuant to SEC Rule 17d–1 for a member that is a clearing firm, such member must submit requests for extensions of time as contemplated by Sections 220.4(c) and 220.8(d) of Regulation T of the Federal Reserve Board and SEC Rule 15c3–3(n) to NASD for approval, in such format as NASD may require.

(b) Each member that is a clearing firm for which NASD is the designated examining authority is required to file a monthly report with NASD in such format as NASD may require, indicating all broker-dealers for which it clears that have overall ratios of requests for extensions of time as contemplated by Sections 220.4(c) and 220.8(d) of Regulation T of the Federal Reserve Board and SEC Rule 15c3–3(m) to total transactions for the month that exceed a percentage specified by NASD. The report is due to NASD within five (5) business days following the end of each reporting month.

* * * * *

II. Self-Regulatory Organization's Statement of the Purpose of, and Statutory Basis for, the Proposed Rule Change

In its filing with the Commission, NASD included statements concerning the purpose of and basis for the proposed rule change and discussed any comments it received on the proposed rule change. The text of these statements may be examined at the places specified in Item IV below. NASD has prepared summaries, set forth in sections A, B, and C below, of the most significant aspects of such statements.

A. Self-Regulatory Organization's Statement of the Purpose of, and Statutory Basis for, the Proposed Rule Change

1. Purpose

Background

Regulation T, issued by the Board of Governors of the Federal Reserve System (''FRB'') pursuant to the Act, among other things, governs the extension of credit to customers by broker-dealers for purchasing securities.[5] Rule 15c3–3 under the Act, among other things, requires broker-dealers to promptly obtain and maintain physical possession or control of customer securities and designates periods of time within which broker-dealers must cure any deficiency by buying-in or otherwise obtaining possession or control of the securities.[6] Under SEC Rule 15c3–3(n), a self-regulatory organization (SRO) may extend certain specified periods to buy-in a security, for one or more limited periods commensurate with the circumstances, where the SRO: (1) Is satisfied that the broker-dealer is acting in good faith in making the request; and (2) exceptional circumstances warrant such action.[7] Regulation T has a similar standard to allow an extension of time for payment for purchases of securities.[8] The SROs that process extension requests, including NASD, have developed standards and procedures for evaluating, granting, denying, and controlling extension requests. The standards include acceptable reasons for requesting an extension, number of extensions permitted per reason, and special limitations and restrictions on customers.[9]

Required Submissions of Requests for Extensions of Time

Proposed NASD Rule 3160(a) would require all clearing firm members for which NASD is the designated examining authority (''DEA'') to submit to NASD requests for extensions of time under Regulation T and SEC Rule 15c3–3(n). While Regulation T currently requires that extension of time requests be directed to a broker-dealer's DEA, Rule 15c3–3(n) provides that a broker-dealer may request an extension of time from any registered national securities exchange or a registered national securities association.

The SEC previously approved NYSE Rule 434 requiring each firm for which the NYSE is the DEA to submit extensions requests to the NYSE.[10] The SRO designated as a member's DEA has responsibility for examining its members that are also members of another SRO for compliance with applicable financial responsibility rules such as Regulation T and Rule 15c3–3. Requiring a member to submit extension requests to its DEA helps to ensure that the DEA receives complete extension information to assist it in performing this function. Such information, among other things, can serve as an early indicator of operational or other difficulties. Approval of the proposed rule change also would ensure uniform application of standards to all customers of firms for which NASD is the DEA. For these reasons, NASD believes that this proposed rule change would create a more effective review of extension requests.

Monthly Reporting Requirement

Proposed NASD Rule 3160(b) would require each clearing firm member for which NASD is the DEA to file a monthly report with NASD, in such format as NASD may require, indicating all broker-dealers for which it clears that have overall ratios of requests for extensions of time as contemplated by Sections 220.4(c) and 220.8(d) of Regulation T of the Federal Reserve Board and SEC Rule 15c3–3(m) to total transactions for the month that exceed a percentage specified by NASD.[11] The monthly report will require clearing firms subject to proposed Rule 3160(b) to identify, among other things: (1) The broker-dealer's name; (2) the number of transactions by the broker-dealer for the month; (3) the number of extension requests for the month; and (4) the ratio of the number of extensions requested to total transactions. Under the proposal, NASD would require that the reports be submitted no later than five business days following the end of each reporting month. For months when no broker-dealer exceeds the criteria, the clearing firm would submit a report indicating such.

Consistent with the NYSE's program,[12] NASD anticipates restricting

[5] 12 CFR 220.4(c) and 220.8(d). Regulation T provides that a customer has one payment period (currently five business days) to submit payment for purchases of securities in a cash account or in a margin account.

[6] 17 CFR 240.15c3–3.

[7] *See* Rule 15c3–3(n), authorizing SROs to extend the periods of time to buy-in a security specified in Rule 15c3–3(d)(2), (d)(3), (h), and (m).

[8] Under Regulation T, a firm's examining authority may grant an extension unless the examining authority believes that the broker-dealer is not acting in good faith or that the broker-dealer has not sufficiently determined that exceptional circumstances warrant such action.

[9] *See* NASD *Notice to Members* 00–45.

[10] *See* Exchange Act Release No. 34073 (May 17, 1994), 59 FR 26826 (May 24, 1994) (SR–NYSE–88–35) (SEC Order Approving Proposed Rule Change by the NYSE Relating to Extensions of Time for Payment of Delivery of Securities). *See also* NYSE Information Memo 94–22 (June 10, 1994).

[11] Rule 15c3–3(m) (Completion of Sell Orders on Behalf of Customers) requires that if a security sold long by a customer has not been delivered within 10 business days after the settlement date, the broker-dealer must either buy the customer in or apply for and receive an extension from the SRO.

[12] *See* Exchange Act Release No. 28726 (December 28, 1990), 56 FR 540 (January 7, 1991) (SR–NYSE–89–24) (SEC Order Approving NYSE Proposed Rule Change Relating to Reporting of Extensions of Time for Payment/Delivery of Securities by Correspondent Broker-Dealers); NYSE Information Memoranda 98–09 (March 5, 1998) and 94–22 (June 10, 1994); *see also* NYSE Information

the number of Regulation T and Rule 15c3–3(m) extension requests to 1% of total transactions for the month for clearing firms and 3% of total transactions for the month for introducing firms.[13] NASD currently is able to compute the ratio of extensions requested to transactions for clearing firms based on information provided in the extension requests and FOCUS report data; however, NASD would use the information submitted by the clearing firms in the new monthly report to monitor introducing firms' compliance with the anticipated 3% threshold. NASD is creating a new template within its existing electronic filing platform to permit clearing firms to submit the required electronic reports regarding their introducing firms' extension requests.

To the extent that firms exceed the proposed threshold limits, NASD will inform them that their ability to receive extensions for their customers will be stopped for a 90-day period if such firm does not reduce the number of subsequent requests below the applicable limit by the next reporting period.[14] NASD also intends to direct clearing firm members to impose limits on introducing firms only where the introducing firm engages in 25 or more transactions per month. NASD believes that these limits are appropriate in light of the standard set forth in Regulation T and Rule 15c3–3 that extensions of time may only be granted under ''exceptional circumstances.''[15]

NASD will announce the effective date of the proposed rule change in a *Notice to Members* to be published no later than 60 days following Commission approval. To give members sufficient time to make necessary changes to their systems that may be required to comply with proposed Rule 3160, the effective date will be at least 60 days following publication of the *Notice to Members* announcing Commission approval.[16]

2. Statutory Basis

NASD believes that the proposed rule change is consistent with the provisions of Section 15A(b)(6) of the Act,[17] which requires, among other things, that NASD's rules must be designed to prevent fraudulent and manipulative acts and practices, to promote just and equitable principles of trade, and, in general, to protect investors and the public interest. NASD believes that the proposed rule change will further ensure that firms are complying with financial responsibility rules and preventing the excessive use of credit for the purchase or carrying of securities.

B. Self-Regulatory Organization's Statement on Burden on Competition

NASD does not believe that the proposed rule change will result in any burden on competition that is not necessary or appropriate in furtherance of the purposes of the Act.

C. Self-Regulatory Organization's Statement on Comments on the Proposed Rule Change Received From Members, Participants, or Others

Written comments were neither solicited nor received.

III. Date of Effectiveness of the Proposed Rule Change and Timing for Commission Action

Within 35 days of the date of publication of this notice in the **Federal Register** or within such longer period (i) as the Commission may designate up to 90 days of such date if it finds such longer period to be appropriate and publishes its reasons for so finding or (ii) as to which the self-regulatory organization consents, the Commission will:

(A) By order approve such proposed rule change, as amended, or

(B) Institute proceedings to determine whether the proposed rule change, as amended, should be disapproved.

IV. Solicitation of Comments

Interested persons are invited to submit written data, views and arguments concerning the foregoing, including whether the proposed rule change is consistent with the Act. Comments may be submitted by any of the following methods:

Electronic Comments

- Use the Commission's Internet comment form (*http://www.sec.gov/rules/sro.shtml*); or
- Send an E-mail to *rule-comments@sec.gov*. Please include File Number SR–NASD–2006–064 on the subject line.

Paper Comments

- Send paper comments in triplicate to Nancy M. Morris, Secretary, Securities and Exchange Commission, 100 F Street, NE., Washington, DC 20549–1090.

All submissions should refer to File Number SR–NASD–2006–064. This file number should be included on the subject line if E-mail is used. To help the Commission process and review your comments more efficiently, please use only one method. The Commission will post all comments on the Commission's Internet Web site (*http://www.sec.gov/rules/sro.shtml*). Copies of the submission, all subsequent amendments, all written statements with respect to the proposed rule change that are filed with the Commission, and all written communications relating to the proposed rule change between the Commission and any person, other than those that may be withheld from the public in accordance with the provisions of 5 U.S.C. 552, will be available for inspection and copying in the Commission's Public Reference Room. Copies of such filing also will be available for inspection and copying at the principal office of NASD. All comments received will be posted without change; the Commission does not edit personal identifying information from submissions. You should submit only information that you wish to make available publicly. All submissions should refer to File Number SR–NASD–2006–064 and should be submitted on or before August 31, 2006.

Memorandum 05–78 (October 12, 2005) (establishing pilot for reporting additional fields for extension requests).

[13] NASD anticipates requiring clearing firms to identify in the monthly report those introducing firms that have overall ratios exceeding 2% consistent with NYSE requirements, notwithstanding that the proposed limitations for introducing firms would not be triggered until the ratio exceeds 3%. The 2% threshold would provide NASD with an ''early warning'' notice as to the concentrations of extensions for these introducing firms. In the event NASD adjusts the 1% or 3% thresholds for imposing limitations, or the 2% filing threshold, in the future, it would advise members of the new parameters in a *Notice to Members.*

[14] For example, if an introducing firm exceeds the applicable threshold for the month of January, its clearing firm would report that fact to NASD by February 5. NASD would advise the introducing firm that it had exceeded its threshold and that it must reduce the number of subsequent requests below the limit by the end of February. If the introducing firm exceeds the applicable threshold for the month of February, its clearing firm would report that fact to NASD by March 5 and the 90-day suspension would start at that time.

[15] In the event NASD adjusts these parameters in the future, it will advise its members by means of a *Notice to Members.*

[16] NASD also filed for immediate effectiveness a proposed rule change to amend Section 8 of Schedule A to NASD's By-Laws to increase the service charge for processing extension requests to $4.00 per request. The effective date of the service charge increase was July 1, 2006. *See* Exchange Act Release No. 53982 (June 14, 2006), 71 FR 35720 (June 21, 2006) (Notice of Filing and Immediate Effectiveness of SR–NASD–2006–063).

[17] 15 U.S.C. 78o–3(b)(6).

For the Commission, by the Division of Market Regulation, pursuant to delegated authority.[18]

J. Lynn Taylor,

Assistant Secretary.

[FR Doc. E6–13007 Filed 8–9–06; 8:45 am]

BILLING CODE 8010–01–P

SECURITIES AND EXCHANGE COMMISSION

[Release No. 34–54268; File No. SR–NASD–2006–078]

Self-Regulatory Organizations; National Association of Securities Dealers, Inc.; Notice of Filing and Immediate Effectiveness of Proposed Rule Change and Amendment Nos. 1 and 2 Thereto Regarding the Pricing Schedule for NASD Members Using the Nasdaq Market Center and Nasdaq's Brut and Inet Facilities

August 3, 2006.

Pursuant to Section 19(b)(1) of the Securities Exchange Act of 1934 (''Act'')[1] and Rule 19b–4 thereunder,[2] notice is hereby given that on June 30, 2006, the National Association of Securities Dealers, Inc. (''NASD''), through its subsidiary, The Nasdaq Stock Market, Inc. (''Nasdaq''), filed with the Securities and Exchange Commission (''Commission'') the proposed rule change as described in Items I, II, and III below, which Items have been prepared by Nasdaq. On July 25, 2006, Nasdaq filed Amendment No. 1 to the proposed rule change. On July 26, 2006, Nasdaq filed Amendment No. 2 to the proposed rule change. Nasdaq filed the proposed rule change pursuant to Section 19(b)(3)(A)(ii) of the Act,[3] and Rule 19b–4(f)(2) thereunder,[4] which renders the proposal effective upon filing with the Commission. The Commission is publishing this notice to solicit comments on the proposed rule change, as amended, from interested persons.

I. Self-Regulatory Organization's Statement of the Terms of Substance of the Proposed Rule Change

Nasdaq proposes to modify the pricing for NASD members using the Nasdaq Market Center and Nasdaq's Brut and Inet Facilities (''Nasdaq Facilities'').[5] Nasdaq states that it will implement the proposed rule change on July 3, 2006. The text of the proposed rule change, as amended, is set forth below. Proposed new language is in *italic*; proposed deletions are in [brackets].[6]

7010. System Services

(a)–(h) No change.

(i) Nasdaq Market Center, Brut, and Inet Order Execution and Routing

(1)–(5) No change.

(6) Except as provided in paragraph (7), the following charges shall apply to the use of the order execution and routing services of the Nasdaq Facilities by members for securities subject to the Consolidated Quotations Service and Consolidated Tape Association plans other than Exchange-Traded Funds (''Covered Securities''):

ORDER EXECUTION

Order that accesses the Quote/Order of a Nasdaq Facility market participant:	
Charge to member entering order	$0.0007 per share executed.
Credit to member providing liquidity:	
Members with an average daily volume through the Nasdaq Facilities in Covered Securities during the month of more than 5 million shares of liquidity accessed, provided, or routed *but less than 10 million shares of liquidity provided.*	$0.0005 per share executed.
Members with an average daily volume through the Nasdaq Facilities in Covered Securities during the month of 10 million or more shares of liquidity provided.	*$0.0006 per share executed.*
Other members	No credit.

ORDER ROUTING

Order routed to Amex	$0.003 per share executed (plus, in the case of orders charged a fee by the Amex specialist, $0.01 per share executed).
Order routed through the ITS	$0.0007 per share executed.
Order routed to NYSE	See DOT fee schedule in Rule 7010(i)(7).
Order for NYSE-listed Covered Security routed to venue other than the NYSE.	$0.001 per share executed.
Order for Covered Security listed on venue other than the NYSE and routed to venue other than Amex.	$0.003 per share executed.

(7)–(9) No change.

(j)–(y) No change.

* * * * *

II. Self-Regulatory Organization's Statement of the Purpose of, and Statutory Basis for, the Proposed Rule Change

In its filing with the Commission, Nasdaq included statements concerning the purpose of and basis for the proposed rule change, as amended, and discussed any comments it received on the proposed rule change, as amended. The text of these statements may be examined at the places specified in Item IV below. Nasdaq has prepared summaries, set forth in Sections A, B, and C below, of the most significant aspects of such statements.

[18] 17 CFR 200.30–3(a)(12).

[1] 15 U.S.C. 78s(b)(1).

[2] 17 CFR 240.19b–4.

[3] 15 U.S.C. 78s(b)(3)(A)(ii).

[4] 17 CFR 240.19b–4(f)(2).

[5] The Commission notes that Nasdaq filed a proposed rule change to apply the same pricing change to non-members. *See* Securities Exchange Act Release No. 54269 (August 3, 2006) (File No. SR–NASD–2006–079).

[6] Changes are marked to the rule text that appears in the electronic NASD Manual found at *www.nasd.com*, as further amended on an immediately effective basis by SR–NASD–2006–057 (May 1, 2006). Prior to the date when The NASDAQ Stock Market LLC (''NASDAQ LLC'') commences operations, NASDAQ LLC will file a conforming change to the rules of NASDAQ LLC approved in Securities Exchange Act Release No. 53128 (January 13, 2006), 71 FR 3550 (January 23, 2006) (File No. 10–131).

A. Self-Regulatory Organization's Statement of the Purpose of, and Statutory Basis for, the Proposed Rule Change

1. Purpose

Nasdaq is proposing to increase its liquidity provider credit for NASD members using the Nasdaq Facilities to trade securities listed on the New York Stock Exchange, the American Stock Exchange, and other exchanges. Specifically, the change applies to securities subject to the Consolidated Quotations Service and Consolidated Tape Association plans other than Exchange-Traded Funds (''Covered Securities'').[7] Nasdaq currently offers a liquidity provider credit of $0.0005 per share to firms with an average daily volume through the Nasdaq Facilities in Covered Securities during a month of more than 5 million shares of liquidity accessed, provided, or routed. Effective July 3, 2006, Nasdaq will offer an increased credit of $0.0006 per share for firms with an average daily volume through the Nasdaq Facilities in Covered Securities during a month of 10 million or more shares of liquidity provided. Nasdaq believes the change should encourage firms to make greater use of the Nasdaq Facilities for trading Covered Securities, particularly with regard to using the Nasdaq Facilities to provide liquidity to support executions.

2. Statutory Basis

Nasdaq believes that the proposed rule change, as amended, is consistent with the provisions of Section 15A of the Act,[8] in general, and with Section 15A(b)(5) of the Act,[9] in particular, in that it provides for the equitable allocation of reasonable dues, fees and other charges among members and issuers and other persons using any facility or system which the NASD operates or controls. Nasdaq states that the proposed rule change, as amended, would increase the liquidity provider credit available to firms that make substantial use of the Nasdaq Facilities for trading Covered Securities, thereby reducing overall trading costs.

B. Self-Regulatory Organization's Statement on Burden on Competition

Nasdaq does not believe that the proposed rule change, as amended, will result in any burden on competition that is not necessary or appropriate in furtherance of the purposes of the Act.

C. Self-Regulatory Organization's Statement on Comments on the Proposed Rule Change Received From Members, Participants, or Others

Written comments were neither solicited nor received.

III. Date of Effectiveness of the Proposed Rule Change and Timing for Commission Action

The foregoing rule change is subject to section 19(b)(3)(A)(ii) of the Act[10] and subparagraph (f)(2) of Rule 19b–4 thereunder[11] because it establishes or changes a due, fee, or other charge applicable only to a member imposed by the self-regulatory organization. Accordingly, the proposal is effective upon Commission receipt of the filing. At any time within 60 days of the filing of the proposed rule change, the Commission may summarily abrogate such rule change if it appears to the Commission that such action is necessary or appropriate in the public interest, for the protection of investors, or otherwise in furtherance of the purposes of the Act.[12]

IV. Solicitation of Comments

Interested persons are invited to submit written data, views, and arguments concerning the foregoing, including whether the proposed rule change, as amended, is consistent with the Act. Comments may be submitted by any of the following methods:

Electronic Comments

- Use the Commission's Internet comment form (*http://www.sec.gov/rules/sro.shtml*); or
- Send an E-mail to *rule-comments@sec.gov.* Please include File No. SR–NASD–2006–078 on the subject line.

Paper Comments

- Send paper comments in triplicate to Nancy M. Morris, Secretary, Securities and Exchange Commission, Station Place, 100 F Street, NE., Washington, DC 20549–1090.

All submissions should refer to File No. SR–NASD–2006–078. This file number should be included on the subject line if E-mail is used. To help the Commission process and review your comments more efficiently, please use only one method. The Commission will post all comments on the Commission's Internet Web site (*http://www.sec.gov/rules/sro.shtml*). Copies of the submission, all subsequent amendments, all written statements with respect to the proposed rule change that are filed with the Commission, and all written communications relating to the proposed rule change between the Commission and any person, other than those that may be withheld from the public in accordance with the provisions of 5 U.S.C. 552, will be available for inspection and copying in the Commission's Public Reference Room. Copies of such filing will also be available for inspection and copying at the principal office of the NASD. All comments received will be posted without change; the Commission does not edit personal identifying information from submissions. You should submit only information that you wish to make available publicly. All submissions should refer to File No. SR–NASD–2006–078 and should be submitted on or before August 31, 2006.

For the Commission, by the Division of Market Regulation, pursuant to delegated authority.[13]

J. Lynn Taylor,

Assistant Secretary.

[FR Doc. E6–13008 Filed 8–9–06; 8:45 am]

BILLING CODE 8010–01–P

[7] Exchange-Traded Funds listed on venues other than Nasdaq are subject to the same fee schedule as Nasdaq-listed securities, under NASD Rule 7010(i)(1).

[8] 15 U.S.C. 78*o*–3.

[9] 15 U.S.C. 78*o*–3(b)(5).

[10] 15 U.S.C. 78s(b)(3)(A)(ii).

[11] 17 CFR 240.19b–4(f)(2).

[12] 15 U.S.C. 78s(b)(3)(C). For purposes of calculating the 60-day period within which the Commission may summarily abrogate the proposal, the Commission considers the period to commence on July 26, 2006, the date on which the Exchange submitted Amendment No. 2.

[13] 17 CFR 200.30–3(a)(12).

SECURITIES AND EXCHANGE COMMISSION

[Release No. 34–54269; File No. SR–NASD–2006–079]

Self-Regulatory Organizations; National Association of Securities Dealers, Inc.; Notice of Filing and Order Granting Accelerated Approval of Proposed Rule Change and Amendment Nos. 1 and 2 Thereto Regarding Pricing for Non-Members Using Nasdaq's Brut and Inet Facilities

August 3, 2006.

Pursuant to Section 19(b)(1) of the Securities Exchange Act of 1934 (''Act'')[1] and Rule 19b–4 thereunder,[2] notice is hereby given that on June 30, 2006, the National Association of Securities Dealers, Inc. (''NASD''), through its subsidiary, The Nasdaq Stock Market, Inc. (''Nasdaq''), filed with the Securities and Exchange Commission (''Commission'') the proposed rule change as described in Items I and II below, which Items have been prepared by Nasdaq. On July 25, 2006, Nasdaq filed Amendment No. 1 to

[1] 15 U.S.C. 78s(b)(1).

[2] 17 CFR 240.19b–4.

the proposed rule change. On July 26, 2006, Nasdaq filed Amendment No. 2 to the proposed rule change. The Commission is publishing this notice to solicit comments on the proposed rule change, as amended, from interested persons. In addition, the Commission is granting accelerated approval of the proposed rule change, as amended.

I. Self-Regulatory Organization's Statement of the Terms of Substance of the Proposed Rule Change

Nasdaq proposes to modify the pricing for non-members using Nasdaq's Brut and Inet Facilities. The filing will apply to these non-members the same pricing change that Nasdaq is instituting for members.[3] Nasdaq seeks approval to implement the proposed rule change retroactively as of July 3, 2006. The text of the proposed rule change, as amended, is set forth below. Proposed new language is in *italics*; proposed deletions are in [brackets].[4]

7010. System Services

(a)–(h) No change.

(i) Nasdaq Market Center, Brut, and Inet Order Execution and Routing

(1)–(7) No change.

(8) The fees applicable to non-members using Nasdaq's Brut and Inet Facilities shall be the fees established for members under Rule 7010(i), as amended by SR–NASD–2005–019, SR–NASD–2005–035, SR–NASD–2005–048, SR–NASD–2005–071, SR–NASD–2005–125, SR–NASD–2005–137, SR–NASD–2005–154, SR–NASD–2006–013, SR–NASD–2006–023, SR–NASD–2006–031, [and] SR–NASD–2006–057, *and SR–NASD–2006–078* and as applied to non-members by SR–NASD–2005–020, SR–NASD–2005–038, SR–NASD–2005–049, SR–NASD–2005–072, SR–NASD–2005–126, SR–NASD–2005–138, SR–NASD–2005–155, SR–NASD–2006–014, SR–NASD–2006–024, SR–NASD–2006–032, [and] SR–NASD–2006–058*, and SR–NASD–2006–079*.

(j)–(y) No change.

* * * * *

[3] *See* Securities Exchange Act Release No. 54268 (August 3, 2006) (File No. SR–NASD–2006–078).

[4] Changes are marked to the rule text that appears in the electronic NASD Manual found at *www.nasd.com*, as amended by SR–NASD–2006–057 (May 1, 2006) on an immediately effective basis and as further proposed to be amended by SR–NASD–2006–058 (May 1, 2006). If SR–NASD–2006–058 is not approved by the Commission, Nasdaq will file a conforming amendment to SR–NASD–2006–079.

The NASDAQ Stock Market LLC (''NASDAQ LLC'') will not file conforming changes to its rules with regard to order execution and routing by non-members, since persons that are not members of NASDAQ LLC will not be permitted to use its order execution and routing systems.

II. Self-Regulatory Organization's Statement of the Purpose of, and Statutory Basis for, the Proposed Rule Change

In its filing with the Commission, Nasdaq included statements concerning the purpose of and basis for the proposed rule change, as amended, and discussed any comments it had received on the proposed rule change, as amended. The text of these statements may be examined at the places specified in Item III below. Nasdaq has prepared summaries, set forth in Sections A, B, and C below, of the most significant aspects of such statements.

A. Self-Regulatory Organization's Statement of the Purpose of, and Statutory Basis for, the Proposed Rule Change

1. Purpose

In SR–NASD–2006–078 [5] Nasdaq increased its liquidity provider credit for NASD members using the Nasdaq Market Center and Nasdaq's Brut and Inet Facilities (the ''Nasdaq Facilities'') to trade securities listed on the New York Stock Exchange, the American Stock Exchange, and other exchanges. Specifically, the change applies to securities subject to the Consolidated Quotations Service and Consolidated Tape Association plans other than Exchange-Traded Funds (''Covered Securities'').[6] Nasdaq currently offers a liquidity provider credit of $0.0005 per share to firms with an average daily volume through the Nasdaq Facilities in Covered Securities during a month of more than 5 million shares of liquidity accessed, provided, or routed. Pursuant to SR–NASD–2006–078, effective July 3, 2006, Nasdaq will offer an increased credit of $0.0006 per share for firms with an average daily volume through the Nasdaq Facilities in Covered Securities during a month of 10 million or more shares of liquidity provided. Nasdaq believes the change should encourage firms to make greater use of the Nasdaq Facilities for trading Covered Securities, particularly with regard to using the Nasdaq Facilities to provide liquidity to support executions.

Nasdaq is submitting this filing to apply these changes to non-members using Nasdaq's Brut and Inet Facilities, because Nasdaq anticipates that these non-members will be allowed to continue to use these facilities until NASDAQ LLC begins to operate as a national securities exchange.

[5] *See* Securities Exchange Act Release No. 54268 (August 3, 2006) (File No. SR–NASD–2006–078).

[6] Exchange-Traded Funds listed on venues other than Nasdaq are subject to the same fee schedule as Nasdaq-listed securities, under NASD Rule 7010(i)(1).

2. Statutory Basis

Nasdaq believes that the proposed rule change, as amended, is consistent with the provisions of Section 15A of the Act,[7] in general, and with Section 15A(b)(5) of the Act,[8] in particular, in that it provides for the equitable allocation of reasonable dues, fees and other charges among members and issuers and other persons using any facility or system which the NASD operates or controls. The proposed rule change, as amended, applies to non-members that use Brut and Inet a fee change that is being implemented for NASD members that use Brut, Inet, and the Nasdaq Market Center. Accordingly, Nasdaq believes that the proposed rule change, as amended, promotes an equitable allocation of fees between members and non-members using Nasdaq's order execution facilities.

B. Self-Regulatory Organization's Statement on Burden on Competition

Nasdaq does not believe that the proposed rule change, as amended, will result in any burden on competition that is not necessary or appropriate in furtherance of the purposes of the Act.

C. Self-Regulatory Organization's Statement on Comments on the Proposed Rule Change Received From Members, Participants, or Others

Written comments were neither solicited nor received.

III. Solicitation of Comments

Interested persons are invited to submit written data, views, and arguments concerning the foregoing, including whether the proposed rule change, as amended, is consistent with the Act. Comments may be submitted by any of the following methods:

Electronic Comments

- Use the Commission's Internet comment form (*http://www.sec.gov/rules/sro.shtml*); or
- Send an e-mail to *rule-comments@sec.gov.* Please include File Number SR–NASD–2006–079 on the subject line.

Paper Comments

- Send paper comments in triplicate to Nancy M. Morris, Secretary, Securities and Exchange Commission, 100 F Street, NE., Washington, DC 20549–1090.

All submissions should refer to File Number SR–NASD–2006–079. This file

[7] 15 U.S.C. 78*o*–3.

[8] 15 U.S.C. 78*o*–3(b)(5).

number should be included on the subject line if e-mail is used. To help the Commission process and review your comments more efficiently, please use only one method. The Commission will post all comments on the Commission's Internet Web site (*http://www.sec.gov/rules/sro.shtml*). Copies of the submission, all subsequent amendments, all written statements with respect to the proposed rule change that are filed with the Commission, and all written communications relating to the proposed rule change between the Commission and any person, other than those that may be withheld from the public in accordance with the provisions of 5 U.S.C. 552, will be available for inspection and copying in the Commission's Public Reference Room. Copies of such filing also will be available for inspection and copying at the principal office of the NASD. All comments received will be posted without change; the Commission does not edit personal identifying information from submissions. You should submit only information that you wish to make publicly available. All submissions should refer to File Number SR–NASD–2006–079 and should be submitted on or before August 31, 2006.

IV. Commission's Findings and Order Granting Accelerated Approval of Proposed Rule Change

The Commission finds that the proposed rule change, as amended, is consistent with the requirements of the Act and the rules and regulations thereunder applicable to a self-regulatory organization.[9] Specifically, the Commission believes that the proposed rule change, as amended, is consistent with Section 15A(b)(5) of the Act,[10] which requires that the rules of the self-regulatory organization provide for the equitable allocation of reasonable dues, fees, and other charges among members and issuers and other persons using any facilities or system which it operates or controls.

The Commission notes that this proposal would retroactively modify pricing for non-NASD members using Nasdaq's Brut and Inet Facilities that would permit the schedule for non-NASD members to mirror the schedule applicable to NASD members that became effective June 30, 2006, pursuant to SR–NASD–2006–078.

Nasdaq has requested that the Commission find good cause for approving the proposed rule change, as amended, prior to the thirtieth day after publication of notice thereof in the **Federal Register**. The Commission notes that the proposed fees for non-NASD members are identical to those in SR–NASD–2006–078, which implemented those fees for NASD members and which became effective as of June 30, 2006. The Commission notes that this change will promote consistency in Nasdaq's fee schedule by applying the same pricing schedule with the same date of effectiveness for both NASD members and non-NASD members. Accordingly, the Commission finds good cause, pursuant to Section 19(b)(2) of the Act,[11] for approving the proposed rule change, as amended, prior to the thirtieth day after the date of publication of notice thereof in the **Federal Register**.

V. Conclusion

It is therefore ordered, pursuant to Section 19(b)(2) of the Act,[12] that the proposed rule change (SR–NASD–2006–079) and Amendments Nos. 1 and 2 thereto be, and hereby are, approved on an accelerated basis.

For the Commission, by the Division of Market Regulation, pursuant to delegated authority.[13]

J. Lynn Taylor,

Assistant Secretary.

[FR Doc. E6–13010 Filed 8–9–06; 8:45 am]

BILLING CODE 8010–01–P

[9] In approving this proposal, the Commission has considered its impact on efficiency, competition, and capital formation. 15 U.S.C. 78c(f).

[10] 15 U.S.C. 78*o*–3(b)(5).

[11] 15 U.S.C. 78s(b)(2).

[12] 15 U.S.C. 78s(b)(2).

[13] 17 CFR 200.30–3(a)(12).

SECURITIES AND EXCHANGE COMMISSION

[Release No. 34–54276; File No. SR–NYSE–2006–55]

Self-Regulatory Organizations; New York Stock Exchange LLC; Notice of Filing and Immediate Effectiveness of Proposed Rule Change Relating to NYSE Rule 36 Communication Between Exchange and Members' Offices

August 4, 2006.

Pursuant to Section 19(b)(1) of the Securities Exchange Act of 1934 (''Act'')[1] and Rule 19b–4 thereunder,[2] notice is hereby given that on July 27, 2006, the New York Stock Exchange LLC (''NYSE'' or ''Exchange'') filed with the Securities and Exchange Commission (''Commission'') the proposed rule change as described in Items I and II below, which Items have been prepared by the Exchange. The Exchange filed the proposed rule change pursuant to Section 19(b)(3)(A) of the Act[3] and Rule 19b–4(f)(6)[4] thereunder, which renders the proposal effective upon filing with the Commission. The Commission is publishing this notice to solicit comments on the proposed rule change from interested persons.

I. Self-Regulatory Organization's Statement of the Terms of Substance of the Proposed Rule Change

The Exchange is proposing to extend the portable phone pilot (''Pilot'') for an additional six months, until January 31, 2007. The Pilot amends NYSE Rule 36 (Communication Between Exchange and Members' Offices) to allow a Floor broker and Registered Competitive Market Maker (''RCMM'') to use an Exchange authorized and provided portable telephone on the Exchange Floor provided certain conditions are met. The current Pilot expires on July 31, 2006.[5]

II. Self-Regulatory Organization's Statement of the Purpose of, and Statutory Basis for, the Proposed Rule Change

In its filing with the Commission, the Exchange included statements concerning the purpose of, and basis for, the proposed rule change. The text of these statements may be examined at the places specified in Item IV below. The Exchange has prepared summaries, set forth in Sections A, B, and C below, of the most significant aspects of such statements.

A. Self-Regulatory Organization's Statement of the Purpose of, and Statutory Basis for, the Proposed Rule Change

1. Purpose

The Commission originally approved the Pilot to be implemented as a six-month pilot[6] beginning no later than June 23, 2003.[7] Since the inception of the Pilot, the Exchange has extended the Pilot six times with the current Pilot

[1] 15 U.S.C.78s(b)(1).

[2] 17 CFR 240.19b–4.

[3] 15 U.S.C. 78s(b)(3)(A).

[4] 17 CFR 240.19b–4(f)(6).

[5] *See* Securities Exchange Act Release No. 53277 (February 13, 2006), 71 FR 8877 (February 21, 2006) (SR–NYSE–2006–03).

[6] *See* Securities Exchange Act Release No. 47671 (April 11, 2003), 68 FR 19048 (April 17, 2003) (SR–NYSE–2002–11) (''Original Order'').

[7] *See* Securities Exchange Act Release No. 47992 (June 5, 2003), 68 FR 35047 (June 11, 2003) (SR–NYSE–2003–19) (delaying the implementation date for portable phones from on or about May 1, 2003 to no later than June 23, 2003).

expiring on July 31, 2006.[8] The Exchange has also filed for permanent approval of NYSE Rule 36, as amended.[9]

With respect to regulatory actions concerning the Pilot, as previously disclosed, there is an open investigation into possible insider trading in an NYSE listed security in which the trading activity of two RCMMs has been identified and is under review.[10] The use of an Exchange authorized and provided portable phone by one of the RCMMs in or about January 2005 is under review as part of the investigation. No administrative or technical problems, other than routine telephone maintenance issues, have resulted from the Pilot over the past few months.[11] The Exchange now proposes to extend the Pilot for an additional six months, until January 31, 2007.

NYSE Rule 36

NYSE Rule 36 governs the establishment of telephone or electronic communications between the Exchange's Trading Floor and any other location. Prior to the Pilot, NYSE Rule 36 prohibited the use of portable telephone communication between the Floor and any off-Floor location.

The Exchange proposes to extend the Pilot for an additional six months, permitting Floor brokers and RCMMs to use Exchange authorized and issued portable telephones on the Floor. Thus, with the approval of the Exchange, a Floor broker would continue to be permitted to engage in direct voice communication from the point of sale to an off-Floor location, such as a member firm's trading desk or the office of one of the broker's customers. Such communications would permit the Floor broker to accept orders consistent with NYSE rules, provide status and oral execution reports as to orders previously received, as well as ''market look'' observations as have historically been routinely transmitted from a Floor broker's booth location.[12]

The Pilot also allows RCMMs to use an Exchange authorized and portable phone solely to call and receive calls from their booths on the Floor, to communicate with their or their member organizations' off-Floor office, and to communicate with the off-Floor office of their clearing member organization to enter off-Floor orders and to discuss matters related to the clearance and settlement of transactions, provided the off-Floor office uses a wired telephone line for these discussions. RCMMs are currently not allowed to use a portable phone to conduct any agency business until issues involving the use of portable phones by RCMMs acting in the capacity of agent have been fully reviewed and resolved by NYSE Regulation in consultation with the Commission.[13] For both RCMMs and Floor brokers, use of a portable telephone on the Exchange Floor other than one authorized and issued by the Exchange will continue to be prohibited.

Both incoming and outgoing calls would continue to be allowed, provided the requirements of all other NYSE rules have been met. A Floor broker would not be permitted to represent and execute any order received as a result of such voice communication unless the order was first properly recorded by the member and entered into the Exchange's Front End Systemic Capture (FESC) electronic database.[14] In addition, NYSE rules require that any Floor broker receiving orders from the public over portable phones must be properly qualified to engage in such direct access business under NYSE Rules 342 and 345, among others.[15]

Specialists are subject to separate restrictions in NYSE Rule 36 on their ability to engage in voice communications from the specialist post to an off-Floor location.[16] The Pilot would not apply to specialists, who would continue to be prohibited from speaking from the post to upstairs trading desks or customers.[17]

The Exchange believes that the approval of the Pilot's continuation for an additional six months will enable the Exchange to continue to provide more direct, efficient access to its trading crowds and customers, increase the speed of transmittal of orders and the execution of trades, and provide an enhanced level of service to customers in an increasingly competitive environment.[18] The Exchange further believes that by enabling customers to speak directly to a Floor broker in a trading crowd on an Exchange authorized and issued portable telephone and by allowing RCMMs to communicate with their upstairs office's land line, the land line of their clearing member organization's upstairs office, and their booth, the Pilot will expedite and make more direct the free flow of information.

Pilot Program Results

Since the Pilot's inception, there have been approximately 734 portable phone subscribers.[19] In addition, with regard to portable phone usage, for a sample week of 5/1/06–5/5/06, an average of 10,542 calls/day were originated from portable phones issued to Floor brokers and RCMMs. An average of 4,672 calls/day were received on portable phones.[20] Of the calls originated from portable phones, an average of 6,724 calls/day

[8] *See* Securities Exchange Act Release Nos. 48919 (December 12, 2003), 68 FR 70853 (December 19, 2003) (SR–NYSE–2003–38) (extending the Pilot for an additional six months ending on June 16, 2004); 49954 (July 1, 2004), 69 FR 41323 (July 8, 2004) (SR–NYSE–2004–30) (extending the Pilot for an additional five months ending on November 30, 2004); 50777 (December 1, 2004), 69 FR 71090 (December 8, 2004) (SR–NYSE–2004–67) (extending the Pilot for an additional four months ending March 31, 2005); 51464 (March 31, 2005), 70 FR 17746 (April 7, 2005) (SR–NYSE–2005–20) (extending the Pilot for an additional four months ending July 31, 2005); 52188 (August 1, 2005), 70 FR 46252 (August 9, 2005) (SR–NYSE–2005–53) (extending the Pilot for an additional four months ending January 31, 2006); and 53277, note 5 *supra*. Also, since the inception, the Exchange has incorporated RCMMs into the Pilot and subsequently amended the Pilot to allow RCMMs to use an Exchange authorized and provided portable telephone on the Exchange Floor to call to and receive calls from their booths on the Floor. *See* Securities Exchange Act Release Nos. 53213 (February 2, 2006), 71 FR 7103 (February 10, 2006) (SR–NYSE–2005–80) and 54215 (July 26, 2006), 71 FR 43551 (August 1, 2006) (SR–NYSE–2006–51).

[9] *See* SR–NYSE–2004–52 (September 7, 2004).

[10] *See* note 5 *supra*.

[11] The Exchange represents that it has received records of incoming telephone calls from January 31, 2006 to May 31, 2006 for Floor brokers and RCMMs and will continue to receive updates. Telephone conversation between David Matta, Principal Rule Counsel, NYSE, and Molly M. Kim, Special Counsel, Division of Market Regulation, Commission, on August 3, 2006.

[12] *See* note 15 *infra* and accompanying text.

[13] Allowing RCMMs acting as Floor brokers to use portable phones would involve further discussions with the Commission and would be the subject of a separate filing with the Commission.

[14] NYSE Rule 123(e). *See also* Securities Exchange Act Release Nos. 43689 (December 7, 2000), 65 FR 79145 (December 18, 2000) (SR–NYSE–98–25) and 44943 (October 16, 2001), 66 FR 53820 (October 24, 2001) (SR–NYSE–2001–39) (discussing certain exceptions to FESC, such as orders to offset an error, or a *bona fide* arbitrage, which may be entered within 60 seconds after a trade is executed).

[15] For more information regarding Exchange requirements for conducting a public business on the Exchange Floor, *see* Information Memos 01–41 (November 21, 2001), 01–18 (July 11, 2001) (available on *http://www.nyse.com/regulation/regulation.html*) and 91–25 (July 8, 1991). *See also* note 13 *supra*.

[16] *See* Securities Exchange Act Release No. 46560 (September 26, 2002), 67 FR 62088 (October 3, 2002) (SR–NYSE–00–31) (discussing restrictions on specialists' communications from the post).

[17] NYSE Rule 36.30.

[18] *See* Securities Exchange Act Release No. 43493 (October 30, 2000), 65 FR 67022 (November 8, 2000) (SR–CBOE–00–04), cited by Securities Exchange Act Release No. 43836 (January 11, 2001), 66 FR 6727 (January 22, 2001) (discussing and approving the Chicago Board Options Exchange's and the Pacific Exchange's proposals to remove current prohibitions against Floor Brokers' use of cellular or cordless phones to make calls to persons located off the trading floor).

[19] This data includes both Floor brokers and RCMMs.

[20] Only Floor Brokers received incoming calls. RCMMs only made outgoing calls and these were to their upstairs offices.

were internal calls to the booth and 3,200 calls/day were external calls.[21] Thus, approximately 68% of the calls originated from portable phones were internal calls to the booth by Floor brokers.

With regard to received calls, of the 4,672 average calls/days received, an average of 2,441 calls/day were external calls and an average of 2,231 calls/day were internal calls received from the booth. Thus, approximately 48% of all received calls were internally generated and 52% were calls from the outside.

RCMMs made 384 outgoing calls and received no incoming calls on their portable phones for the above referenced week.

The Exchange believes that the Pilot appears to be successful in that there is a reasonable degree of usage of portable phones. Except as noted above, there have been no other regulatory, administrative, or other technical problems identified with their usage. The Exchange further believes that the Pilot appears to facilitate communication on the Floor for both Floor brokers and RCMMs without any corresponding drawbacks. Therefore, the Exchange believes it is appropriate to extend the Pilot for an additional six months, expiring on January 31, 2007.

2. Statutory Basis

The Exchange believes that the proposed rule change is consistent with the requirement under Section 6(b)(5) of the Act[22] that an Exchange have rules that are designed to promote just and equitable principles of trade, to remove impediments to and perfect the mechanism of a free and open market and a national market system and, in general, to protect investors and the public interest. The Exchange believes the amendment to NYSE Rule 36 supports the mechanism of free and open markets by providing for increased means by which communications to and from the Floor of the Exchange may take place.

B. Self-Regulatory Organization's Statement on Burden on Competition

The Exchange does not believe that the proposed rule change will impose any burden on competition that is not necessary or appropriate in furtherance of the purposes of the Act.

[21] During this period RCMMs were not authorized to communicate with their booths.

[22] 15 U.S.C. 78f(b)(5).

C. Self-Regulatory Organization's Statement on Comments on the Proposed Rule Change Received From Members, Participants or Others

The Exchange has neither solicited nor received written comments on the proposed rule change.

III. Date of Effectiveness of the Proposed Rule Change and Timing for Commission Action

Because the foregoing proposed rule change does not: (i) Significantly affect the protection of investors or the public interest; (ii) impose any significant burden on competition; and (iii) become operative for 30 days from the date on which it was filed, or such shorter time as the Commission may designate if consistent with the protection of investors and the public interest, it has become effective pursuant to Section 19(b)(3)(A) of the Act[23] and Rule 19b-4(f)(6) thereunder.[24] At any time within 60 days of the filing of the proposed rule change, the Commission may summarily abrogate such rule change if it appears to the Commission that such action is necessary or appropriate in the public interest, for the protection of investors, or otherwise in furtherance of the purposes of the Act.

The Exchange requests that the Commission waive the 30-day operative period under Rule 19b–4(f)(6)(iii).[25] The Exchange believes that the continuation of the Pilot is in the public interest, as it will avoid inconvenience and interruption to the public. The Commission believes that it is consistent with the protection of investors and the public interest to waive the 30-day operative delay and make this proposed rule change immediately effective upon filing on July 27, 2006.[26] The Commission believes that the waiver of the 30-day operative delay will allow the Exchange to continue, without interruption, the existing operation of its Pilot until January 31, 2007.

The Commission notes that proper surveillance is an essential component of any telephone access policy to an exchange trading floor. Surveillance procedures should help to ensure that Floor brokers and RCMMs use portable phones as authorized by NYSE Rule 36 and that orders are being handled in compliance with NYSE rules.[27] The Commission expects the Exchange to actively review these procedures and address any potential concerns that have arisen during the Pilot. In this regard, the Commission notes that the Exchange should address whether telephone records are adequate for surveillance purposes.

The Commission also requests that the Exchange report any problems, surveillance, or enforcement matters associated with the Floor brokers' and RCMMs' use of an Exchange-authorized and-provided portable telephone on the Exchange Floor. As stated in the Original Order, the NYSE should also address whether additional surveillance would be needed because of the derivative nature of the ETFs. Furthermore, in any future additional filings on the Pilot, the Commission would expect that the NYSE submit information documenting the usage of the phones, any problems that have occurred, including, among other things, any regulatory actions or concerns, and any advantages or disadvantages that have resulted.[28]

IV. Solicitation of Comments

Interested persons are invited to submit written data, views and arguments concerning the foregoing, including whether the proposed rule change is consistent with the Exchange Act. Comments may be submitted by any of the following methods:

Electronic Comments

- Use the Commission's Internet comment form (*http://www.sec.gov/rules/sro.shtml*); or
- Send e-mail to *rule-comments@sec.gov*. Please include File Number SR–NYSE–2006–55 on the subject line.

Paper Comments

- Send paper comments in triplicate to Nancy M. Morris, Secretary, Securities and Exchange Commission, 100 F Street NE., Washington, DC 20549–1090.

All submissions should refer to File Number SR–NYSE–2006–55. This file number should be included on the subject line if E-mail is used. To help the Commission process and review your comments more efficiently, please use only one method. The Commission will post all comments on the

[23] 15 U.S.C. 78s(b)(3)(A).

[24] 17 CFR 240.19b–4(f)(6).

[25] 17 CFR 240.19b-4(f)(6)(iii)

[26] For purposes only of waiving the 30-day operating delay of this proposal, the Commission has considered the proposed rule's impact on efficiency, competition, and capital formation. 15 U.S.C. 78c(f).

[27] *See* note 15 *supra* and accompanying text for other NYSE requirements that Floor brokers be properly qualified before doing public customer business.

[28] The Commission expects the information to distinguish between Floor brokers' and RCMMs' usage of the phones.

Commission's Internet Web site (*http://www.sec.gov/rules/sro.shtml*). Copies of the submission, all subsequent amendments, all written statements with respect to the proposed rule change that are filed with the Commission, and all written communications relating to the proposed rule change between the Commission and any person, other than those that may be withheld from the public in accordance with the provisions of 5 U.S.C. 552, will be available for inspection and copying in the Commission's Public Reference Room. Copies of such filing also will be available for inspection and copying at the principal office of the NYSE. All comments received will be posted without change; the Commission does not edit personal identifying information from submissions. You should submit only information that you wish to make available publicly.

All submissions should refer to File Number SR–NYSE–2006–55 and should be submitted on or before August 31, 2006.

For the Commission, by the Division of Market Regulation, pursuant to delegated authority.[29]

Nancy M. Morris,

Secretary.

[FR Doc. E6–13025 Filed 8–9–06; 8:45 am]

BILLING CODE 8010–01–P

[29] 17 CFR 200.30–3(a)(12).

SECURITIES AND EXCHANGE COMMISSION

[Release No. 34–54267; File No. SR–Phlx–2006–42]

Self-Regulatory Organizations; Philadelphia Stock Exchange, Inc.; Notice of Filing and Immediate Effectiveness of Proposed Rule Change Relating to Priority for In-Crowd Participants Respecting Crossing, Facilitation and Solicited Orders in Open Outcry Transactions

August 3, 2006.

Pursuant to section 19(b)(1) of the Securities Exchange Act of 1934 (''Act''),[1] and Rule 19b–4[2] thereunder, notice is hereby given that on July 10, 2006, the Philadelphia Stock Exchange, Inc. (''Phlx'' or ''Exchange'') filed with the Securities and Exchange Commission (''Commission'') the proposed rule change as described in Items I, II, and III, below, which Items have been prepared by the Exchange. The Exchange filed the proposed rule change pursuant to section 19(b)(3)(A) of the Act[3] and Rule 19b–4(f)(6)[4] thereunder, which renders the proposed rule change effective upon filing with the Commission. The Commission is publishing this notice to solicit comments on the proposed rule change from interested persons.

[1] 15 U.S.C. 78s(b)(1).

[2] 17 CFR 240.19b–4.

[3] 15 U.S.C. 78s(b)(3)(A).

[4] 17 CFR 240.19b–4(f)(6).

I. Self-Regulatory Organization's Statement of the Terms of Substance of the Proposed Rule Change

The Phlx proposes to amend Phlx Rule 1014, Commentary .05(c), to afford priority to in-crowd participants over out-of-crowd Streaming Quote Traders (''SQTs'')[5] and Remote Streaming Quote Traders (''RSQTs'')[6] in crossing,[7] facilitation[8] and solicited[9] orders. The proposed rule change would apply only to such orders that are represented in open outcry with a size of at least 500 contracts on each side. The text of the proposed rule change is set forth below. Proposed new language is in *italics.*

* * * * *

Obligations and Restrictions Applicable to Specialists and Registered Options Traders

Rule 1014. (a)–(h) No change.

Commentary:

.01–.04 No change.

.05 (a)–(b) No change.

(c) Non-Electronic Orders. *(i)* In the event that a Floor Broker or specialist presents a non-electronic order in a Streaming Quote Option in which an RSQT is assigned, and/or in which an SQT assigned in such Streaming Quote Option is not a crowd participant, such SQT and/or RSQT may not participate in trades stemming from such a non-electronic order unless such non-electronic order is executed at the price quoted by the non-crowd participant SQT and/or RSQT at the time of execution.

(ii) Notwithstanding the foregoing, respecting crossing, facilitation and solicited orders (as defined in Rule 1064) with a size of at least 500 contracts on each side that are represented and executed in open outcry, priority shall be afforded to in-crowd participants over RSQTs and out-of- crowd SQTs. Such orders shall be allocated in accordance with Exchange rules.

(iii) The specialist and/or SQTs participating in a trading crowd may, in response to a verbal request for a market by a floor broker, state a bid or offer that is different than their electronically submitted bid or offer, provided that such stated bid or offer is not inferior to such electronically submitted bid or offer, except when such stated bid or offer is made in response to a floor broker's solicitation of a single bid or offer as set forth in Rule 1033(a)(ii).

(iv) For purposes of this Rule, an SQT or non-SQT ROT shall be deemed to be participating in a crowd if such SQT is, at the time an order is represented in the crowd, physically located in a specific ''Crowd Area.'' A Crowd Area shall consist of a specific physical location marked with specific, visible physical boundaries on the options floor, as determined by the Options Committee. An SQT or non-SQT ROT who is physically present in such Crowd Area may engage in options transactions in assigned issues as a crowd participant in such a Crowd Area, provided that such SQT or non-SQT ROT fulfills the requirements set forth in this Rule 1014. An SQT or non-SQT ROT shall be deemed to be participating in a single Crowd Area.

.06–.19 No change.

* * * * *

II. Self-Regulatory Organization's Statement of the Purpose of, and Statutory Basis for, the Proposed Rule Change

In its filing with the Commission, the Phlx included statements concerning the purpose of and basis for the proposed rule change and discussed any comments it received on the proposed rule change. The text of these statements may be examined at the places specified in Item IV below. The Phlx has prepared

[5] An SQT is an Exchange Registered Options Trader (''ROT'') who has received permission from the Exchange to generate and submit option quotations electronically through the Automated Options Market (''AUTOM'') in eligible options to which such SQT is assigned. An SQT may only submit such quotations while such SQT is physically present on the floor of the Exchange. *See* Phlx Rule 1014(b)(ii)(A).

[6] An RSQT is an ROT that is a member or member organization with no physical trading floor presence who has received permission from the Exchange to generate and submit option quotations electronically through AUTOM in eligible options to which such RSQT has been assigned. An RSQT may only submit such quotations electronically from off the floor of the Exchange. *See* Phlx Rule 1014(b)(ii)(B).

[7] A crossing order occurs when an options Floor Broker holds orders to buy and sell the same option series. Such a Floor Broker may cross such orders, provided that the trading crowd is given an opportunity to bid and offer for such option series in accordance with Exchange rules. *See* Phlx Rule 1064(a).

[8] A facilitation order occurs when an options Floor Broker holds an options order for a public customer and a contraside order. Such a Floor Broker may execute such orders as a facilitation order, provided that such Floor Broker proceeds in accordance with Exchange rules concerning facilitation orders. *See* Phlx Rule 1064(b).

[9] A solicitation occurs whenever an order, other than a cross, is presented for execution in the trading crowd resulting from an away-from-the-crowd expression of interests to trade by one broker dealer to another. *See* Phlx Rule 1064(c).

summaries, set forth in sections A, B, and C below, of the most significant aspects of such statements.

A. Self-Regulatory Organization's Statement of the Purpose of, and Statutory Basis for, the Proposed Rule Change

1. Purpose

The Exchange proposes to amend Phlx Rule 1014, Commentary .05 by affording priority to in-crowd participants over out-of-crowd SQTs and RSQTs in crossing, facilitation and solicited orders represented and executed in open outcry in order to encourage order flow providers to send such orders to the Exchange.

Currently, Commentary .05 to Phlx Rule 1014 provides that, in the event that a Floor Broker or specialist presents a non-electronic order in a Streaming Quote Option in which an RSQT is assigned, and/or in which an SQT assigned in such Streaming Quote Option is not a crowd participant, such SQT and/or RSQT may not participate in trades stemming from such a non-electronic order unless such non-electronic order is executed at the price quoted by the non-crowd participant SQT and/or RSQT at the time of execution.

The proposal would carve out crossing, facilitation, and solicited orders from the rule. Specifically, the proposed rule would state that, respecting crossing, facilitation and solicited orders with a size of at least 500 contracts on each side that are represented and executed in open outcry, priority would be afforded to in-crowd participants over RSQTs and out-of crowd SQTs. Such orders would be allocated in accordance with Exchange rules.[10] The proposed rule would apply only to crossing, facilitation and solicited orders represented in open outcry, and would not apply to orders submitted electronically via the Exchange's electronic options trading platform, Phlx XL,[11] to which other priority rules apply.[12]

Recently, the Exchange adopted another exception to its normal priority rules [13] concerning open outcry orders, affording priority to in-crowd participants over RSQTs and out-of crowd SQTs in split-price transactions, even when the bid/ask differential is one minimum trading increment.[14]

The Exchange believes that the proposed rule should provide greater incentive for order flow providers to submit crossing, facilitation and solicited orders to the Exchange, thus enabling the Exchange to compete with another exchange that has similar rules in effect.[15]

The proposed rule would apply only to crossing, facilitation and solicited orders with a size of at least 500 contracts on each side that are represented and executed in open outcry.[16]

2. Statutory Basis

The Exchange believes that its proposal is consistent with section 6(b) of the Act [17] in general, and furthers the objectives of section 6(b)(5) of the Act [18] in particular, in that it is designed to promote just and equitable principles of trade, to remove impediments to and perfect the mechanism of a free and open market and a national market system, and, in general, to protect investors and the public interest, by adopting a limited exception to the Exchange's priority rules concerning certain order types represented and executed in open outcry.

B. Self-Regulatory Organization's Statement on Burden on Competition

The Exchange does not believe that the proposed rule change will impose any burden on competition not necessary or appropriate in furtherance of the purposes of the Act.

C. Self-Regulatory Organization's Statement on Comments on the Proposed Rule Change Received From Members, Participants, or Others

No written comments were either solicited or received.

III. Date of Effectiveness of the Proposed Rule Change and Timing for Commission Action

Because the foregoing proposed rule change does not:

(i) significantly affect the protection of investors or the public interest;

(ii) impose any significant burden on competition; and

(iii) become operative for 30 days from the date on which it was filed, or such shorter time as the Commission may designate if consistent with the protection of investors and the public interest, it has become effective pursuant to section 19(b)(3)(A) of the Act,[19] and Rule 19b–4(f)(6) thereunder.[20] At any time within 60 days of the filing of the proposed rule change the Commission may summarily abrogate such rule change if it appears to the Commission that such action is necessary or appropriate in the public interest, for the protection of investors, or otherwise in furtherance of the purposes of the Act.

A proposed rule change filed under Rule 19b–4(f)(6) [21] normally does not become operative prior to 30 days after the date of filing. However, pursuant to Rule 19b–4(f)(6)(iii),[22] the Commission may designate a shorter time if such action is consistent with the protection of investors and the public interest. The Exchange has asked the Commission to waive the 30-day pre-operative delay. The Commission believes that such waiver is consistent with the protection of investors and the public interest because it would allow the Phlx to compete with another exchange that provides priority to in-crowd participants.[23] For this reason, the Commission designates the proposed rule change to be effective upon filing with the Commission.[24]

IV. Solicitation of Comments

Interested persons are invited to submit written data, views, and arguments concerning the foregoing, including whether the proposed rule change is consistent with the Act. Comments may be submitted by any of the following methods:

[10] The Commentary to Phlx Rule 1064 defines participation guarantees in crossing and facilitation orders, and Phlx Rule 1014(g) sets forth the in-crowd trade allocation algorithm for other orders.

[11] *See* Securities Exchange Act Release No. 50100 (July 27, 2004), 69 FR 46612 (August 3, 2004) (SR–Phlx–2003–59).

[12] *See, e.g.*, Phlx Rules 1014(g)(vii) and (viii).

[13] *See, e.g.*, Phlx Rules 119 and 120.

[14] *See* Securities Exchange Act Release No. 54050 (June 27, 2006), 71 FR 38199 (July 5, 2006) (SR–Phlx–2006–37). *See also*, Securities Exchange Act Release No. 53874 (May 25, 2006), 71 FR 32171 (June 2, 2006) (SR–Phlx–2006–18).

[15] *See* Securities Exchange Act Release No. 51366 (March 14, 2005), 70 FR 13217 (March 18, 2005) (SR–CBOE–2004–75) (CBOE Rule 6.45A affords priority over out-of-crowd participants in all open outcry situations).

[16] Phlx has clarified that the proposed rule change would not provide priority to in-crowd participants' orders over orders on the limit order book, including those orders of non-public customers. Telephone conference on July 18, 2006 among Richard S. Rudolph, Vice President and Counsel, Phlx and Nancy Sanow, Assistant Director, Ira Brandriss, Special Counsel and Mitra Mehr, Special Counsel, Division of Market Regulation, Commission.

[17] 15 U.S.C. 78f(b).

[18] 15 U.S.C. 78f(b)(5).

[19] 15 U.S.C. 78s(b)(3)(A).

[20] 17 CFR 240.19b–4(f)(6).

[21] 17 CFR 240.19b–4(f)(6).

[22] 17 CFR 240.19b–4(f)(6)(iii).

[23] At the Exchange's request, the Commission has waived the five-day pre-notice filing requirement for ''non-controversial'' proposals. *See* 17 CFR 240.19b–4(f)(6)(iii).

[24] For purposes only of accelerating the operative date of this proposal, the Commission has considered the rule's impact on efficiency, competition and capital formation. 15 U.S.C. 78c(f).

Electronic Comments

- Use the Commission's Internet comment form (*http://www.sec.gov/rules/sro.shtml*); or
- Send an e-mail to *rule-comments@sec.gov*. Please include File Number SR–Phlx–2006–42 on the subject line.

Paper Comments

- Send paper comments in triplicate to Nancy M. Morris, Secretary, Securities and Exchange Commission, 100 F Street, NE., Washington, DC 20549–1090.

All submissions should refer to File Number SR–Phlx–2006–42. This file number should be included on the subject line if e-mail is used. To help the Commission process and review your comments more efficiently, please use only one method. The Commission will post all comments on the Commission's Internet Web site (*http://www.sec.gov/rules/sro.shtml*). Copies of the submission, all subsequent amendments, all written statements with respect to the proposed rule change that are filed with the Commission, and all written communications relating to the proposed rule change between the Commission and any person, other than those that may be withheld from the public in accordance with the provisions of 5 U.S.C. 552, will be available for inspection and copying in the Commission's Public Reference Room. Copies of the filing also will be available for inspection and copying at the principal office of the Phlx. All comments received will be posted without change; the Commission does not edit personal identifying information from submissions. You should submit only information that you wish to make available publicly. All submissions should refer to File Number SR–Phlx–2006–42 and should be submitted on or before August 31, 2006.

For the Commission, by the Division of Market Regulation, pursuant to delegated authority.[25]

Nancy M. Morris,

Secretary.

[FR Doc. E6–13023 Filed 8–9–06; 8:45 am]

BILLING CODE 8010–01–P

[25] 17 CFR 200.30–3(a)(12).

SOCIAL SECURITY ADMINISTRATION

Modifications to the Disability Determination Procedures; Extension of Testing of Some Disability Redesign Features

AGENCY: Social Security Administration (SSA).

ACTION: Notice of the extension of tests involving modifications to the disability determination procedures.

SUMMARY: We are announcing the extension of tests involving modifications to our disability determination procedures that we are conducting under the authority of current rules codified at 20 CFR 404.906 and 416.1406. These rules provide authority to test several modifications to the disability determination procedures that we normally follow in adjudicating claims for disability insurance benefits under title II of the Social Security Act (the Act) and for supplemental security income payments based on disability under title XVI of the Act. We have decided to extend testing of the two redesign features of the disability prototype for up to 3 years in the following disability determination services (DDSs): New York, Pennsylvania, Alabama, Michigan, Louisiana, Missouri, Colorado, California (Los Angeles North and West Branches), and Alaska. We are not extending testing of these features in the New Hampshire DDS due to the publication of the final rule changes to 20 CFR 404.1527(f)(1) and 20 CFR 405.201 that take effect August 1, 2006. These rule changes are initially only in effect in the Boston Region.

DATES: We are extending our selection of cases to be included in these tests from September 30, 2006 until no later than September 30, 2009. If we decide to continue selection of cases for these tests beyond this date, we will publish another notice in the **Federal Register**.

FOR FURTHER INFORMATION CONTACT: Phil Landis, Office of Disability Determinations, Social Security Administration, 6401 Security Boulevard, Baltimore, Maryland 21235–6401, 410–965–5388.

SUPPLEMENTARY INFORMATION: Current regulations at 20 CFR 404.906 and 416.1406 authorize us to test, individually, or in any combination, different modifications to the disability determination procedures. We have conducted several tests under the authority of these rules, including a prototype that incorporates a number of modifications to the disability determination procedures that the DDSs use. The prototype included three redesign features, and we previously extended the tests of two of those features: the use of a single decisionmaker, in which a disability examiner may make the initial disability determination in most cases without requiring the signature of a medical consultant; and elimination of the reconsideration level of review. We are extending the testing of the two redesign features of the disability prototype.

We also have conducted another test involving the use of a single decisionmaker who may make the initial disability determination in most cases without requiring the signature of a medical consultant. We are extending the period during which we will select cases to be included in this test of the single decisionmaker feature in the following DDSs: West Virginia, Florida, Kentucky, North Carolina, Kansas, Nevada, Guam, and Washington. We are not extending this test in the Maine and Vermont DDSs due to the publication of the final rule change to 20 CFR 404.1527(f)(1). The rule change goes into effect on August 1, 2006 in the Boston Region only.

Extension of Testing of Some Disability Redesign Features

On August 30, 1999, we published in the **Federal Register** a notice announcing a prototype that would test a new disability claims process in 10 States, also called the prototype process (64 FR 47218). On December 23, 1999, we published a notice in the **Federal Register** (65 FR 72134) extending the period during which we would select cases to be included in a separate test of the single decisionmaker feature. In these notices, we stated that selection of cases was expected to be concluded on or about December 31, 2001. We also stated that, if we decided to continue the tests beyond that date, we would publish another notice in the **Federal Register**. We subsequently published notices in the **Federal Register** extending selection of cases for these tests. Most recently, on September 26, 2005, we published a notice extending selection of cases for the tests until no later than September 30, 2006 (70 FR 56204). We also stated that, if we decided to continue selection of cases for these tests beyond that date, we would publish another notice in the **Federal Register**. We have decided to extend selection of cases for two features of the prototype process (single decisionmaker and elimination of the reconsideration step), and the separate test of single decisionmaker beyond September 30, 2006. We expect that our selection of cases for these tests will end on or before September 30, 2009.

This extension also applies to the locations in the State of New York that we added to the prototype test in a notice published in the **Federal Register** on December 26, 2000 (65 FR 81553).

Dated: August 3, 2006.

Linda S. McMahon,

Deputy Commissioner for Operations.

[FR Doc. E6–13102 Filed 8–9–06; 8:45 am]

BILLING CODE 4191–02–P

SOCIAL SECURITY ADMINISTRATION

Privacy Act of 1974 as Amended; Computer Matching Program (SSA/Department of Health and Human Services/Administration for Children and Families/Office of Child Support Enforcement (HHS/ACF/OCSE))—Match Number 1074

AGENCY: Social Security Administration (SSA).

ACTION: Notice of the renewal of an existing computer matching program which expired on June 18, 2006. The match is conducted on a quarterly basis. The next match is scheduled for September 2006.

SUMMARY: In accordance with the provisions of the Privacy Act, as amended, this notice announces a computer matching program that SSA plans to conduct with the HHS/ACF/OCSE.

DATES: SSA will file a report of the subject matching program with the Committee on Homeland Security and Governmental Affairs of the Senate, the Committee on Government Reform of the House of Representatives, and the Office of Information and Regulatory Affairs, Office of Management and Budget (OMB). The matching program will be effective as indicated below.

ADDRESSES: Interested parties may comment on this notice by either telefaxing to (410) 965–5328 or by writing to the Associate Commissioner, Office of Income Security Programs, 200 Altmeyer Building, 6401 Security Boulevard, Baltimore, MD 21235–6401. All comments received will be available for public inspection at this address.

FOR FURTHER INFORMATION CONTACT: The Associate Commissioner for the Office of Income Security Programs, as shown above.

SUPPLEMENTARY INFORMATION:

A. General

The Computer Matching and Privacy Protection Act of 1988 (Public Law 100–503), amended the Privacy Act (5 U.S.C. 552a) by establishing the conditions under which computer matching involving the Federal government could be performed and adding certain protections for individuals applying for, and receiving, Federal benefits. Section 7201 of the Omnibus Budget Reconciliation Act of 1990 (Public Law 101–508) further amended the Privacy Act regarding protections for such individuals.

The Privacy Act, as amended, regulates the use of computer matching by Federal agencies when records in a system of records are matched with other Federal, State, or local government records. It requires Federal agencies involved in computer matching programs to:

(1) Negotiate written agreements with the other agency, or agencies, participating in the matching programs;

(2) Obtain the Data Integrity Boards' approval of the match agreements;

(3) Publish notice of the computer matching program in the **Federal Register**;

(4) Furnish detailed reports about matching programs to Congress and OMB;

(5) Notify applicants and beneficiaries that their records are subject to matching; and

(6) Verify match findings before reducing, suspending, terminating or denying an individual's benefits or payments.

B. SSA Computer Matches Subject to the Privacy Act.

We have taken action to ensure that all of SSA's computer matching programs comply with the requirements of the Privacy Act, as amended.

Dated: August 4, 2006.

Martin H. Gerry,

Deputy Commissioner for Disability and Income Security Programs.

Notice of Computer Matching Program, Social Security Administration (SSA) with the Health and Human Services/Administration for Children and Families/Office of Child Support Enforcement (HHS/ACF/OCSE).

A. Participating Agencies

SSA and OCSE.

B. Purpose of the Matching Program

The matching program will assist SSA in establishing or verifying eligibility and/or payment amounts under the Supplemental Security Income (SSI) program, as authorized by the Social Security Act and by the Privacy Act. Under the matching program, SSA will obtain quarterly wage, new hire, and unemployment insurance information from OCSE.

C. Authority for Conducting the Matching Program

This matching program is carried out under the authority of section 453(j)(4), 1631(e)(1)(B) and (f) of the Social Security Act, 42 U.S.C., 653(j)(4) and 1383(e)(1)(B) and (f), and 5 U.S.C.552a(o),(p), (q) and (r).

D. Categories of Records and Individuals Covered by the Matching Program

On the basis of certain identifying information provided by SSA to OCSE, OCSE will send SSA electronic files containing quarterly wage, new hire and unemployment insurance information in National Directory of New Hires of its Federal Parent Locator Service system of records. SSA will then match the OCSE data with title XVI payment information maintained in Supplemental Security Income Record and Special Veterans Benefits system of records.

E. Inclusive Dates of the Match

The matching program will become effective no sooner than 40 days after notice for the program is sent to Congress and OMB, or 30 days after publication of this notice in the **Federal Register**, whichever date is later. The matching program will continue for 18 months from the effective date and may be extended for an additional 12 months thereafter, if certain conditions are met.

[FR Doc. E6–13029 Filed 8–9–06; 8:45 am]

BILLING CODE 4191–02–P

DEPARTMENT OF STATE

[Public Notice 5489]

60-Day Notice of Proposed Information Collection: DS–4024, American Citizens Services Internet Based Registration System (IBRS), OMB Number 1405–0152

ACTION: Notice of request for public comments.

SUMMARY: The Department of State is seeking Office of Management and Budget (OMB) approval for the information collection described below. The purpose of this notice is to allow 60 days for public comment in the **Federal Register** preceding submission to OMB. We are conducting this process in accordance with the Paperwork Reduction Act of 1995.

Title of Information Collection: American Citizens Services Internet Based Registration System (IBRS).

OMB Control Number: 1405–0152.

Type of Request: Revision of Currently Approved Collection. The

new version of IBRS includes the following data-related changes: Registrants are now able to add multiple addresses, phones and e-mails; There is no longer a short-term/long-term distinction, so all users are required to select a U.S. embassy or consulate when registering a trip; registrants can now sign up for embassy/consulate specific e-mail lists and this revision provides the option of completing a paper version of the registration which may be e-mailed, faxed, mailed to U.S. embassies or consulates or executed in person to be hand entered in the IBRS database by the U.S. embassy or consulate.

Originating Office: CA/OCS.

Form Number: DS–4024, DS–4024e.

Respondents: American Citizens traveling abroad.

Estimated Number of Respondents: 500,000.

Estimated Number of Responses: 500,000.

Average Hours Per Response: 10 minutes.

Total Estimated Burden: 83,333.

Frequency: On occasion.

Obligation to Respond: Voluntary.

DATES: The Department will accept comments from the public up to 60 days from October 10, 2006.

ADDRESSES: You may submit comments by any of the following methods:

- E-mail: *ASKPRI@state.gov.*
- Mail (paper, disk, or CD–ROM submissions): Overseas Citizens Services, CA/OCS/PRI, U.S. Department of State, SA–29, 4th Floor, 2201 C Street, NW., Washington, DC 20520.
- Fax: 202–736–9111.
- Hand Delivery or Courier: Overseas Citizens Services, CA/OCS/PRI, U.S. Department of State, 2100 Pennsylvania Avenue, NW., Washington, DC 20037.

You must include the DS form number (if applicable), information collection title, and OMB control number in any correspondence.

FOR FURTHER INFORMATION CONTACT: Direct requests for additional information regarding the collection listed in this notice, including requests for copies of the proposed information collection and supporting documents, to Monica A. Gaw, CA/OCS/PRI, U.S. Department of State, SA–29, 4th Floor, Washington, DC 20520, who may be reached on 202–736–9107 or via e-mail at *ASKPRI@state.gov.*

SUPPLEMENTARY INFORMATION: We are soliciting public comments to permit the Department to:

- Evaluate whether the proposed information collection is necessary for the proper performance of our functions.
- Evaluate the accuracy of our estimate of the burden of the proposed collection, including the validity of the methodology and assumptions used.
- Enhance the quality, utility, and clarity of the information to be collected.
- Minimize the reporting burden on those who are to respond, including the use of automated collection techniques or other forms of technology.

Abstract of Proposed Collection

The American Citizens Services Internet Based Registration System (IBRS) makes it possible for U.S. nationals to register on line from anywhere in the world. In the event of a family emergency, natural disaster or international crisis, U.S. embassies and consulates rely on this registration information to provide critical information and assistance to them.

Methodology

99% of responses are received via electronic submission on the Internet. The service is available on the Department of State, Bureau of Consular Affairs Web site *http://travel.state.gov* at *https://travelregistration.state.gov/ibrs/.* The paper version of the collection permits respondents who do not have Internet access to provide the information to the U.S. embassy or consulate by fax, e-mail, mail or in person.

Dated: July 21, 2006.

Maura Harty,

Assistant Secretary, Bureau of Consular Affairs, Department of State.

[FR Doc. E6–13094 Filed 8–9–06; 8:45 am]

BILLING CODE 4710–06–P

DEPARTMENT OF STATE

[Public Notice 5490]

Bureau of Educational and Cultural Affairs (ECA) Request for Grant Proposals: Summer Language Institutes for American Youth

Announcement Type: New Grant.

Funding Opportunity Number: ECA/PE/C/PY–07–03.

Catalog of Federal Domestic Assistance Number: 00.000.

Application Deadline: October 5, 2006.

Executive Summary: The Youth Programs Division, Office of Citizen Exchanges of the Bureau of Educational and Cultural Affairs, announces an open competition for projects to provide foreign language instruction overseas for American high school students in Summer 2007. Public and private non-profit organizations meeting the provisions described in Internal Revenue Code section 26 U.S.C. 501(c)(3) may submit proposals to implement six-to eight-week summer institutes in China or in an Arabic-speaking country that offer U.S. high school students formal and informal language instruction through a comprehensive exchange experience.

I. Funding Opportunity Description

Authority

Overall grant making authority for this program is contained in the Mutual Educational and Cultural Exchange Act of 1961, as amended, Public Law 87–256, also known as the Fulbright-Hays Act. The purpose of the Act is ''to enable the Government of the United States to increase mutual understanding between the people of the United States and the people of other countries * * *; to strengthen the ties which unite us with other nations by demonstrating the educational and cultural interests, developments, and achievements of the people of the United States and other nations * * * and thus to assist in the development of friendly, sympathetic, and peaceful relations between the United States and the other countries of the world.'' The funding authority for the program above is provided through legislation.

Purpose

The Bureau of Educational and Cultural Affairs (ECA) is supporting the participation of youth in intensive, substantive educational exchange opportunities that will promote language learning as well as engage the successor generation in a dialogue for greater understanding.

Promoting the study of critical languages among American youth is a vital element of America's security in the post-9/11 world and its engagement in the global economy, as well as promoting mutual understanding and respect between the people of the United States and the citizens of strategically important countries around the world.

The goals of the Summer Language Institute for American Youth are:

- To improve the ability of Americans to engage with the people of other countries through the shared language of the partner country;
- To develop a cadre of Americans with advanced linguistic skills and cultural understanding who are able to advance the international dialogue, promote the security of the United States, and compete effectively in the global economy;
- To provide a tangible incentive for the learning and use of foreign languages.

In order to achieve these goals, the Bureau is offering the opportunity for American secondary school students to gain language skills in Arabic or Chinese. ECA plans to award multiple grants for Summer Language Institutes. Organizations that wish to apply to implement institutes in more than one language must submit separate proposals for each language. Proposed institutes will be compared only against submissions for the same language. Applicants may apply for a grant between $100,000 and $250,000 in order to implement an overseas language institute between June and August 2007.

Through these institutes, high school students from the United States will spend six to eight weeks on a program abroad in the summer of 2007. The institutes will provide not only intensive language instruction in a classroom setting but will also provide language-learning opportunities through immersion in the cultural, social, educational, and home life of the partner country. The exchange program will enhance the participants' knowledge of the host country's history, culture, and political system.

Indicators of a Successful Program

- Pre- and post-institute language testing of participants will demonstrate a substantive increase in language skills.
- Participants will demonstrate '' for example, through surveys, essays, focus groups, or presentations '' a deeper understanding of the host country's culture, including its customs, beliefs, and practices.
- Alumni will continue their foreign language study and/or participate in other exchanges to the participating countries.
- Students and families from the host country who engage with the U.S. participants demonstrate an interest in learning more about the United States.

Capacity of Administering Organization

U.S. applicant organizations must have the necessary capacity in the partner country to implement the program through either its own offices or a partner institution. Organizations applying for this grant must demonstrate their (or their partners') capacity for conducting projects of this nature, focusing on three areas of competency: (1) Provision of foreign language instruction programs and provision of educational and cultural exchange activities as outlined in this document; (2) age-appropriate programming for the target audience; and (3) experience in working with the proposed partner country or countries.

Country and Language Information

For all language study, participants will learn speaking, listening, reading, and writing, including new alphabets. The Bureau reserves the right to alter the list of eligible countries based on safety and security concerns.

For Arabic language exchanges: Applicant organizations should plan to send students to a country in North Africa, the Middle East, or the Gulf region, with the exception of Algeria, Iraq, Israel, Libya, Lebanon, Saudi Arabia, West Bank/Gaza, and Yemen. Students should learn Modern Standard Arabic in class and colloquial Arabic through informal study and through interaction with their host families and peers.

Students with basic language skills who are ready for intermediate instruction will gain the most from this immersion experience, but participants in the Arabic institutes may be beginning speakers who have had little or no instruction in the language. The delegation may be a mix of both groups, as long as the proposed institute makes explicit accommodation for learners of varying skill levels.

For Chinese language exchanges: Applicant organizations should plan to send students to Mainland China or Taiwan. Students must learn Mandarin in class. Teaching materials used in the program should be available in both simplified and traditional character versions. The Hanyu pinyin romanization system should be used.

Students with advanced beginner or intermediate language skills who are ready for further instruction will gain the most from an immersion experience. Participants in the Chinese institutes will have already studied the language formally at the time of application for at least one year. The proposed institute will make explicit accommodation for learners of varying skill levels.

Participant Selection

The grant recipient will recruit, screen, and select a group of students representing the ethnic, racial, socio-economic, and religious diversity of the United States. Students should have completed grade 9, 10, 11, or 12 by summer 2007, and must not be younger than 14 nor older than 18 by the start date of the institute. Selected students will also demonstrate suitability for an intensive exchange experience, including maturity, flexibility, and adaptability. The students' language skills at the start of the institute will meet the requirements for each language outlined above.

Institute Summary

Each six to eight-week summer institute overseas for high school students will focus on language study and cultural immersion and will include four to six hours per day of formal and informal language training, plus excursions, briefings and discussions on key issues.

The grant recipient will provide language instruction for a delegation of teenagers who are likely to have mixed skill levels in the language. While teaching conversational vocabulary will be necessary to help students cope with their immersion setting, classes should also provide formal instruction in grammar, vocabulary, and pronunciation, and will cover speaking, listening, reading, and writing.

During the exchange, the students will also have the opportunity to participate in activities designed to teach them about community life, citizen participation, and the culture and history of the host country. Activities should engage host country teenagers as much as possible. The program activities will introduce the students to the community—its leaders and institutions, the ways citizens participate in local government, and the resolution of societal problems—and will include educational excursions that serve to enhance the visitors'' understanding of contemporary society, culture, media, political institutions, ethnic diversity, history, and environment of the region. ECA requires participation in a community service project that also involves youth of a similar age from the host country. Participants should also have opportunities to give presentations on their lives in the United States in community forums.

Since the purpose of the institute is to provide an immersion program for the language learners and increase their language skills, ECA strongly urges organizations to arrange homestays with local families for as much of the duration of the institute as possible, balancing this with time spent in a hotel or dormitory setting where the participants may be more inclined to speak English.

The delegation should have an adult accompany them on the international flight to the host country, and adult staff should be available to support the participants during the course of the institute.

Applicants must provide a plan of follow-up with alumni, such as by E-mail, through a Web site or weblog, and/or in person, primarily for the purpose of supporting the continuation of the

students' language studies. Grant recipients should assist alumni in maintaining connections with organizations and individuals in the host country. The grant recipient will be expected to work in coordination with ECA to track the activities of alumni and their continued interest in studying the language.

School Partnerships

The Summer Language Institutes are well suited for involving a school partnership. Applicants may weave a school partnership component into their proposals as a way to deepen the institutional ties between schools in the United States and in the partner country. This approach is best suited for existing partnerships, but could also help further nascent relationships. The desirability of a school partnership component includes the prospect of offering institutional, rather than just individual, benefits; curriculum development; a ''multiplier effect'' or the opportunity to engage many people in the school community in the institute; and the building of sustainable relationships as school linkages span many years.

School partnerships may be included in a variety of ways. Students could travel to a partner school, either as a host site for the institute or to visit during the institute for a school tour, home hospitality, or a social activity. Teachers could team-teach in language or other subjects. Partner schools could offer follow-on activities for institute alumni such as digital video conferences, online language practice, implementation of joint projects (via DVC or online) that were initiated during the institute, *e.g.*, an oral history of their communities or a water testing project.

Building the Summer Language Institute on a school partnership is not required but suggested for those applicants with these linkages. If you choose this approach, please make explicit mention of the benefits in your proposal.

Grant funding includes recruitment and selection of participants, orientation, travel, tuition and maintenance costs, educational enhancements, cultural and social activities, alumni activities, and administrative costs.

Note: All printed materials and formal oral communications should acknowledge the role of the U.S. Department of State's Bureau of Educational and Cultural Affairs. Drafts of printed materials developed for this program should be submitted to ECA for review and distribution as it sees fit. Copies of materials given to and prepared by the students should be provided to the ECA program office in a timely fashion.

Programs must comply with J–1 visa regulations. Please refer to the Proposal Submission Instructions, including the Project Objectives, Goals, and Implementation (POGI) document, for further information.

II. Award Information

Type of Award: Grant.

Fiscal Year Funds: 2007.

Approximate Total Funding: $1,000,000, pending availability of funds.

Approximate Number of Awards: 5.

Floor of Award Range: $100,000.

Ceiling of Award Range: $250,000.

Anticipated Award Date: Pending availability of funds, the proposed start date is January 20, 2007.

Anticipated Project Completion Date: Approximately 14 to 18 months after the start date, depending on the proposed program plan.

Additional Information: Pending successful implementation of this program and the availability of funds in subsequent fiscal years, ECA may renew these grants for two additional fiscal years.

III. Eligibility Information

III.1. Eligible applicants

Applications may be submitted by public and private non-profit organizations meeting the provisions described in Internal Revenue Code section 26 U.S.C. 501(c)(3).

III.2. Cost Sharing or Matching Funds

There is no minimum or maximum percentage required for this competition. However, the Bureau encourages applicants to provide maximum levels of cost sharing and funding in support of its programs.

When cost sharing is offered, it is understood and agreed that the applicant must provide the amount of cost sharing as stipulated in its proposal and later included in an approved grant agreement. Cost sharing may be in the form of allowable direct or indirect costs. For accountability, you must maintain written records to support all costs which are claimed as your contribution, as well as costs to be paid by the Federal government. Such records are subject to audit. The basis for determining the value of cash and in-kind contributions must be in accordance with OMB Circular A–110, (Revised), Subpart C.23—Cost Sharing and Matching. In the event you do not provide the minimum amount of cost sharing as stipulated in the approved budget, ECA's contribution will be reduced in like proportion.

III.3. Other Eligibility Requirements

Bureau grant guidelines require that organizations with less than four years experience in conducting international exchanges be limited to $60,000 in Bureau funding. ECA anticipates awarding grants in the range of $100,000 to $250,000 to support program and administrative costs required to implement this exchange program. Therefore, organizations with less than four years experience in conducting international exchanges are ineligible to apply under this competition. The Bureau urges applicants to provide maximum levels of cost sharing and funding in support of its programs.

IV. Application and Submission Information

Note: Please read the complete announcement before sending inquiries or submitting proposals. Once the RFGP deadline has passed, Bureau staff may not discuss this competition with applicants until the proposal review process has been completed.

IV.1 Contact Information to Request an Application Package

Please contact the Youth Programs Division (ECA/PE/C/PY), Room 568, U.S. Department of State, SA–44, 301 4th Street, SW., Washington DC 20547, Telephone (202) 203–7505, Fax (202) 203–7529, E-mail: *LantzCS@state.gov* to request a Solicitation Package. Please refer to the Funding Opportunity Number (ECA/PE/C/PY–07–03) located at the top of this announcement when making your request.

Alternatively, an electronic application package may be obtained from *http://www.grants.gov*. Please see section IV.3f for further information.

The Solicitation Package contains the Proposal Submission Instruction (PSI) document, which consists of required application forms and standard guidelines for proposal preparation.

It also contains the Project Objectives, Goals and Implementation (POGI) document, which provides specific information, award criteria, and budget instructions tailored to this competition.

Please specify Bureau Program Officer Carolyn Lantz and refer to the Funding Opportunity Number located at the top of this announcement on all other inquiries and correspondence.

IV.2. To Download a Solicitation Package Via Internet

The entire Solicitation Package may be downloaded from the Bureau's Web site at *http://exchanges.state.gov/education/rfgps/menu.htm*, or from the Grants.gov Web site at *http://www.grants.gov*.

Please read all information before downloading.

IV.3. Content and Form of Submission

Applicants must follow all instructions in the Solicitation Package. The application should be submitted per the instructions under IV.3f. ''Application Deadline and Methods of Submission'' section below.

IV.3a. You are required to have a Dun and Bradstreet Data Universal Numbering System (DUNS) number to apply for a grant or cooperative agreement from the U.S. Government. This number is a nine-digit identification number, which uniquely identifies business entities. Obtaining a DUNS number is easy and there is no charge. To obtain a DUNS number, access *http://www.dunandbradstreet.com* or call 1–866–705–5711. Please ensure that your DUNS number is included in the appropriate box of the SF–424 form that is part of the formal application package.

IV.3b. All proposals must contain an executive summary, proposal narrative and budget.

Please Refer to the Solicitation Package. It contains the mandatory Proposal Submission Instructions (PSI) document and the Project Objectives, Goals and Implementation (POGI) document for additional formatting and technical requirements.

IV.3c. You must have nonprofit status with the IRS at the time of application. If your organization is a private nonprofit which has not received a grant or cooperative agreement from ECA in the past three years, or if your organization received nonprofit status from the IRS within the past four years, you must submit the necessary documentation to verify nonprofit status as directed in the PSI document. Failure to do so will cause your proposal to be declared technically ineligible.

IV.3d. Please take into consideration the following information when preparing your proposal narrative:

IV.3d.1 Adherence To All Regulations Governing The J Visa: The Office of Citizen Exchanges of the Bureau of Educational and Cultural Affairs is the official program sponsor of the exchange program covered by this RFGP, and an employee of the Bureau will be the ''Responsible Officer'' for the program under the terms of 22 CFR part 62, which covers the administration of the Exchange Visitor Program (J visa program). Under the terms of 22 CFR part 62, organizations receiving grants under this RFGP will be third parties ''cooperating with or assisting the sponsor in the conduct of the sponsor's program.'' The actions of grantee program organizations shall be ''imputed to the sponsor in evaluating the sponsor's compliance with'' 22 CFR part 62. Therefore, the Bureau expects that any organization receiving a grant under this competition will render all assistance necessary to enable the Bureau to fully comply with 22 CFR part 62 *et seq.*

The Bureau of Educational and Cultural Affairs places great emphasis on the secure and proper administration of Exchange Visitor (J visa) Programs and adherence by grantee program organizations and program participants to all regulations governing the J visa program status. Therefore, proposals should explicitly state in writing that the applicant is prepared to assist the Bureau in meeting all requirements governing the administration of Exchange Visitor Programs as set forth in 22 CFR part 62. If your organization has experience as a designated Exchange Visitor Program Sponsor, the applicant should discuss their record of compliance with 22 CFR part 62 *et. seq.*, including the oversight of their Responsible Officers and Alternate Responsible Officers, screening and selection of program participants, provision of pre-arrival information and orientation to participants, monitoring of participants, proper maintenance and security of forms, record-keeping, reporting and other requirements.

The Office of Citizen Exchanges of ECA will be responsible for issuing any DS–2019 forms to foreign participants.

A copy of the complete regulations governing the administration of Exchange Visitor (J) programs is available at *http://exchanges.state.gov* or from: United States Department of State, Office of Exchange Coordination and Designation, ECA/EC/ECD—SA–44, Room 734, 301 4th Street, SW., Washington DC 20547, Telephone: (202) 203–5029, FAX: (202) 453–8640.

IV.3d.2 Diversity, Freedom and Democracy Guidelines: Pursuant to the Bureau's authorizing legislation, programs must maintain a non-political character and should be balanced and representative of the diversity of American political, social, and cultural life. ''Diversity'' should be interpreted in the broadest sense and encompass differences including, but not limited to ethnicity, race, gender, religion, geographic location, socio-economic status, and physical challenges. Applicants are strongly encouraged to adhere to the advancement of this principle both in program administration and in program content. Please refer to the review criteria under the 'Support for Diversity' section for specific suggestions on incorporating diversity into your proposal. Public Law 104–319 provides that ''in carrying out programs of educational and cultural exchange in countries whose people do not fully enjoy freedom and democracy,'' the Bureau ''shall take appropriate steps to provide opportunities for participation in such programs to human rights and democracy leaders of such countries.'' Public Law 106—113 requires that the governments of the countries described above do not have inappropriate influence in the selection process. Proposals should reflect advancement of these goals in their program contents, to the full extent deemed feasible.

IV.3d.3. Program Monitoring and Evaluation: Proposals must include a plan to monitor and evaluate the project's success, both as the activities unfold and at the end of the program. The Bureau recommends that your proposal include a draft survey questionnaire or other technique plus a description of a methodology to use to link outcomes to original project objectives. The Bureau expects that the grantee will track participants or partners and be able to respond to key evaluation questions, including satisfaction with the program, learning as a result of the program, changes in behavior as a result of the program, and effects of the program on institutions (institutions in which participants work or partner institutions). The evaluation plan should include indicators that measure gains in mutual understanding as well as substantive knowledge.

Successful monitoring and evaluation depend heavily on setting clear goals and outcomes at the outset of a program. Your evaluation plan should include a description of your project's objectives, your anticipated project outcomes, and how and when you intend to measure these outcomes (performance indicators). The more that outcomes are ''smart'' (specific, measurable, attainable, results-oriented, and placed in a reasonable time frame), the easier it will be to conduct the evaluation. You should also show how your project objectives link to the goals of the program described in this RFGP.

Your monitoring and evaluation plan should clearly distinguish between program *outputs* and *outcomes*. *Outputs* are products and services delivered, often stated as an amount. Output information is important to show the scope or size of project activities, but it cannot substitute for information about progress towards outcomes or the results achieved. Examples of outputs include the number of people trained or the number of seminars conducted.

Outcomes, in contrast, represent specific results a project is intended to achieve and is usually measured as an extent of change.

Findings on outputs and outcomes should both be reported, but the focus should be on outcomes.

We encourage you to assess the following four levels of outcomes, as they relate to the program goals set out in the RFGP (listed here in increasing order of importance):

1. Participant satisfaction with the program and exchange experience.

2. Participant learning, such as increased knowledge, aptitude, skills, and changed understanding and attitude. Learning includes both substantive (subject-specific) learning and mutual understanding.

3. Participant behavior, concrete actions to apply knowledge in work or community; greater participation and responsibility in civic organizations; interpretation and explanation of experiences and new knowledge gained; continued contacts between participants, community members, and others.

4. Institutional changes, such as increased collaboration and partnerships, policy reforms, new programming, and organizational improvements.

Please note: Consideration should be given to the appropriate timing of data collection for each level of outcome. For example, satisfaction is usually captured as a short-term outcome, whereas behavior and institutional changes are normally considered longer-term outcomes.

Overall, the quality of your monitoring and evaluation plan will be judged on how well it (1) specifies intended outcomes; (2) gives clear descriptions of how each outcome will be measured; (3) identifies when particular outcomes will be measured; and (4) provides a clear description of the data collection strategies for each outcome (*i.e.*, surveys, interviews, or focus groups). (Please note that evaluation plans that deal only with the first level of outcomes [satisfaction] will be deemed less competitive under the present evaluation criteria.)

Grantees will be required to provide reports analyzing their evaluation findings to the Bureau in their regular program reports. All data collected, including survey responses and contact information, must be maintained for a minimum of three years and provided to the Bureau upon request.

IV.3e. Please take the following information into consideration when preparing your budget:

IV.3e.1. Applicants must submit a comprehensive budget for the entire program. Grant requests should be at least $100,000 and should not exceed $250,000. There must be a summary budget as well as breakdowns reflecting both administrative and program budgets. Applicants may provide separate sub-budgets for each program component, phase, location, or activity to provide clarification.

Please refer to the POGI and the PSI documents in the Solicitation Package for complete budget guidelines and formatting instructions.

IV.3f. Application Deadline and Methods of Submission:

Application Deadline Date: October 5, 2006.

Reference Number: ECA/PE/C/PY–07–03.

Methods of Submission:

Applications may be submitted in one of two ways:

1. In hard-copy, via a nationally recognized overnight delivery service (*i.e.*, DHL, Federal Express, UPS, Airborne Express, or U.S. Postal Service Express Overnight Mail, etc.), or

2. Electronically through *http://www.grants.gov.*

Along with the Project Title, all applicants must enter the above Reference Number in Box 11 on the SF–424 contained in the mandatory Proposal Submission Instructions (PSI) of the solicitation document.

IV.3f.1 Submitting Printed Applications: Applications must be shipped no later than the above deadline. Delivery services used by applicants must have in-place, centralized shipping identification and tracking systems that may be accessed via the Internet and delivery people who are identifiable by commonly recognized uniforms and delivery vehicles. Proposals shipped on or before the above deadline but received at ECA more than seven days after the deadline will be ineligible for further consideration under this competition. Proposals shipped after the established deadlines are ineligible for consideration under this competition. ECA will *not* notify you upon receipt of application. It is each applicant's responsibility to ensure that each package is marked with a legible tracking number and to monitor/confirm delivery to ECA via the Internet. Delivery of proposal packages *may not* be made via local courier service or in person for this competition. Faxed documents will not be accepted at any time. Only proposals submitted as stated above will be considered.

Important note: When preparing your submission please make sure to include one extra copy of the completed SF–424 form and place it in an envelope addressed to ''ECA/EX/PM''.

The original, one fully-tabbed copy, and six copies of the application with Tabs A–E (for a total of 8 copies) should be sent to: U.S. Department of State, SA–44, Bureau of Educational and Cultural Affairs, Ref.: ECA/PE/C/PY–07–03, Program Management, ECA/EX/PM, Room 534, 301 4th Street, SW., Washington, DC 20547.

Along with the Project Title, all applicants must enter the above Reference Number in Box 11 on the SF–424 contained in the mandatory Proposal Submission Instructions (PSI) of the solicitation document.

Applicants must also submit the executive summary, proposal narrative, budget section, and any important appendices as e-mail attachments in Microsoft Word and Excel to the following e-mail address: *LantzCS@state.gov.* In the E-mail message subject line, include the name of the applicant organization and the partner country. The Bureau will transmit these files electronically to the Public Affairs Sections of the relevant U.S. Embassies for review.

IV.3f.2—Submitting Electronic Applications: Applicants have the option of submitting proposals electronically through Grants.gov (*http://www.grants.gov*). Complete solicitation packages are available at Grants.gov in the ''Find'' portion of the system. Please follow the instructions available in the ''Get Started'' portion of the site (*http://www.grants.gov/GetStarted*).

Applicants have until midnight (12 a.m.), Washington, DC, time, of the closing date to ensure that their entire applications have been uploaded to the grants.gov site. Applications uploaded to the site after midnight of the application deadline date will be automatically rejected by the grants.gov system, and will be technically ineligible.

Applicants will receive a confirmation e-mail from grants.gov upon the successful submission of an application. ECA will *not* notify you upon receipt of electronic applications.

IV.3g. Intergovernmental Review of Applications: Executive Order 12372 does not apply to this program.

V. Application Review Information

V.1. Review Process

The Bureau will review all proposals for technical eligibility. Proposals will be deemed ineligible if they do not fully adhere to the guidelines stated herein and in the Solicitation Package. All

eligible proposals will be reviewed by the program office, as well as the Public Diplomacy section overseas, where appropriate. Eligible proposals will be subject to compliance with Federal and Bureau regulations and guidelines and forwarded to Bureau grant panels for advisory review. Proposals may also be reviewed by the Office of the Legal Adviser or by other Department elements. Final funding decisions are at the discretion of the Department of State's Assistant Secretary for Educational and Cultural Affairs. Final technical authority for assistance awards (grants) resides with the Bureau's Grants Officer.

Review Criteria

Please see proposal review criteria in the accompanying Project Objectives, Goals, and Implementation (POGI) document.

VI. Award Administration Information

VI.1a. Award Notices

Final awards cannot be made until funds have been appropriated by Congress, allocated and committed through internal Bureau procedures. Successful applicants will receive an Assistance Award Document (AAD) from the Bureau's Grants Office. The AAD and the original grant proposal with subsequent modifications (if applicable) shall be the only binding authorizing document between the recipient and the U.S. Government. The AAD will be signed by an authorized Grants Officer, and mailed to the recipient's responsible officer identified in the application.

Unsuccessful applicants will receive notification of the results of the application review from the ECA program office coordinating this competition.

VI.2 Administrative and National Policy Requirements

Terms and Conditions for the Administration of ECA agreements include the following:

Office of Management and Budget Circular A–122, ''Cost Principles for Nonprofit Organizations.''

Office of Management and Budget Circular A–21, ''Cost Principles for Educational Institutions.''

OMB Circular A–87, ''Cost Principles for State, Local and Indian Governments''.

OMB Circular No. A–110 (Revised), Uniform Administrative Requirements for Grants and Agreements with Institutions of Higher Education, Hospitals, and other Nonprofit Organizations.

OMB Circular No. A–102, Uniform Administrative Requirements for Grants-in-Aid to State and Local Governments.

OMB Circular No. A–133, Audits of States, Local Government, and Non-profit Organizations.

Please reference the following Web sites for additional information:
http://www.whitehouse.gov/omb/grants:
http://exchanges.state.gov/education/grantsdiv/terms.htm#articleI

VI.3. Reporting Requirements

You must provide ECA with a hard copy original plus two copies of the following reports:

1. A final program and financial report no more than 90 days after the expiration of the award;

2. Interim program and financial reports that include information on the progress made on the program plan and program results to date.

Grantees will be required to provide reports analyzing their evaluation findings to the Bureau in their regular program reports. (Please refer to IV. Application and Submission Instructions (IV.3.d.3) above for Program Monitoring and Evaluation information.

All data collected, including survey responses and contact information, must be maintained for a minimum of three years and provided to the Bureau upon request.

All reports must be sent to the ECA Grants Officer and ECA Program Officer listed in the final assistance award document.

VI.4. Program Data Requirements

Organizations awarded grants will be required to maintain specific data on program participants and activities in an electronically accessible database format that can be shared with the Bureau as required. As a minimum, the data must include the following:

1. Name, address, contact information and biographic sketch of all persons who travel internationally on funds provided by the grant or who benefit from the grant funding but do not travel.

2. Itineraries of international and domestic travel, providing dates of travel and cities in which any exchange experiences take place. Final schedules for in-country and U.S. activities must be received by the ECA Program Officer at least three work days prior to the official opening of the activity.

VII. Agency Contacts

For questions about this announcement, contact: Carolyn Lantz, Youth Programs Division, Office of Citizen Exchanges, Bureau of Educational and Cultural Affairs, ECA/PE/C/PY–07–03, U.S. Department of State, SA–44, 301 4th Street, SW., Room 568, Washington, DC 20547, Telephone (202) 203–7505, Fax (202) 203–7529, E-mail *LantzCS@state.gov.*

All correspondence with the Bureau concerning this RFGP should reference the above title and number ECA/PE/C/PY–07–03.

Please read the complete **Federal Register** announcement before sending inquiries or submitting proposals. Once the RFGP deadline has passed, Bureau staff may not discuss this competition with applicants until the proposal review process has been completed.

VIII. Other Information

Notice

The terms and conditions published in this RFGP are binding and may not be modified by any Bureau representative. Explanatory information provided by the Bureau that contradicts published language will not be binding. Issuance of the RFGP does not constitute an award commitment on the part of the Government. The Bureau reserves the right to reduce, revise, or increase proposal budgets in accordance with the needs of the program and the availability of funds. Awards made will be subject to periodic reporting and evaluation requirements per section VI.3 above.

Dated: August 3, 2006.

Dina Habib Powell,

Assistant Secretary for Educational and Cultural Affairs, Department of State.

[FR Doc. 06–6837 Filed 8–9–06; 8:45 am]

BILLING CODE 4710–05–P

DEPARTMENT OF STATE

[Public Notice 5488]

Meeting on Possible Mandate Expansion for the International Mobile Satellite Organization (IMSO)

The Department of State announces a meeting to hear public views on issues related to the possible expansion of the mandate of the International Mobile Satellite Organization (IMSO), to include new oversight and regulatory responsibilities that may affect U.S. and non-U.S. mobile satellite services providers. The IMSO is convening an Assembly of Parties meeting September 25–29, 2006, for the member governments to: (1) Consider and act on proposals to amend the intergovernmental IMSO Convention (which has treaty status among most member governments) to expand the IMSO's scope of authority; and (2) elect a new Director of the Organization.

Presently, the IMSO's authority applies exclusively to Inmarsat plc. A proposal has been made to extend IMSO's oversight to include all mobile satellite service providers, specifically in the context of provision of capacity for the Global Maritime Distress and Safety System (GMDSS). Additionally, in the context of work that has been ongoing in the International Maritime Organization, the Parties will be asked to consider proposals to authorize IMSO to perform certain review and auditing functions for a new vessel ''Long Range Identification and Tracking'' system being developed for maritime security. Formal amendments to the Convention have been introduced by fifteen European countries so that ''[t]he Organization may assume any other functions or duties [related to mobile satellite services], subject to the decision of the Assembly.'' Prior to the Assembly meeting, the IMSO Advisory Committee will meet September 20–21, 2006, to consider, inter alia, a draft Public Services Agreement which satellite service providers would be required to sign before being allowed to provide services for the GMDSS. The Public Services Agreement would require the payment of new fees to the IMSO. Public views and advice are being sought well in advance of the IMSO Assembly and Advisory Committee meetings.

Background documentation may be found on the Department's Web site: *http://www.state.gov/e/eb/cip/imso.*

The Department of State's public meeting will take place on Wednesday, August 23, 2006 from 1:30 p.m. to 3:30 p.m. at the Department's Harry S. Truman headquarters building, 2201 C St., NW., Washington, DC. Please note that due to security considerations, parking in the vicinity of the building is extremely limited. Members of the public are encouraged to participate and join in discussions, subject to the discretion of the moderator. Persons wishing to make formal presentations should provide advance notice to the contact below. Time may be limited. Persons planning to attend this meeting should send the following data by fax to (202) 647–5957 or e-mail to *maydc@state.gov* not later than 72 hours before the meeting: (1) Name of the meeting, (2) name of participant, (3) organizational affiliation, (4) date of birth, (5) citizenship, and (6) either Social Security or Passport number. A valid government issued photo ID must be presented to gain entrance to the Department of State.

Dated: August 3, 2006.

Douglas May,

Director for Technology Policy, International Communications and Information Policy, Department of State.

[FR Doc. E6–13095 Filed 8–9–06; 8:45 am]

BILLING CODE 4710–07–P

DEPARTMENT OF TRANSPORTATION

Office of the Secretary

Aviation Proceedings, Agreements Filed the Week Ending July 28, 2006

The following Agreements were filed with the Department of Transportation under the sections 412 and 414 of the Federal Aviation Act, as amended (49 U.S.C. 1382 and 1384) and procedures governing proceedings to enforce these provisions. Answers may be filed within 21 days after the filing of the application.

Docket Number: OST–2006–25479.

Date Filed: July 27, 2006.

Parties: Members of the International Air Transport Association.

Subject: PAC/RESO/448 dated July 27, 2006. Twenty-Ninth Passenger Agency Conference (PACONF/29) Geneva, 28–30 June 2006. Adopted Resolutions for Expedited Implementation. Intended effective date: September 1, 2006.

Docket Number: OST–2006–25480.

Date Filed: July 27, 2006.

Parties: Members of the International Air Transport Association.

Subject: TC2 Europe-Middle East. Expedited Resolution 002dk (Memo 0224). Intended effective date: August 15, 2006.

Docket Number: OST–2006–25481.

Date Filed: July 27, 2006.

Parties: Members of the International Air Transport Association.

Subject: TC2 Within Middle East. Expedited Resolutions (Memo 0161). Intended effective date: August 15, 2006.

Docket Number: OST–2006–25505.

Date Filed: July 28, 2006.

Parties: Members of the International Air Transport Association.

Subject: CBPP/15/Meet/004/05 dated July 25, 2006. Finally Adopted Resolutions: 600a. Intended effective date: December 1, 2006.

Barbara J. Hairston,

Supervisory Dockets Officer, Alternate Federal Register Liaison.

[FR Doc. E6–13037 Filed 8–9–06; 8:45 am]

BILLING CODE 4910–9X–P

DEPARTMENT OF TRANSPORTATION

Office of the Secretary

Notice of Applications for Certificates of Public Convenience and Necessity and Foreign Air Carrier Permits Filed Under Subpart B (Formerly Subpart Q) During the Week Ending July 28, 2006

The following Applications for Certificates of Public Convenience and Necessity and Foreign Air Carrier Permits were filed under Subpart B (formerly Subpart Q) of the Department of Transportation's Procedural Regulations (*See* 14 CFR 301.201 *et. seq.*). The due date for Answers, Conforming Applications, or Motions to Modify Scope are set forth below for each application. Following the Answer period DOT may process the application by expedited procedures. Such procedures may consist of the adoption of a show-cause order, a tentative order, or in appropriate cases a final order without further proceedings.

Docket Number: OST–2006–25478, OST–2005–22228.

Date Filed: July 26, 2006.

Due Date for Answers, Conforming Applications, or Motion to Modify Scope: August 16, 2006.

Description: Application of Southern Air Inc. (''Southern'') requesting a certificate authorizing it to provide scheduled air transportation of property and mail between a point or points in the U.S. via intermediate points and a point or points in the Netherlands, Belgium, Finland, Denmark, Norway, Sweden, Luxembourg, Austria, Iceland, Switzerland, Czech Republic, Germany, Jordan, Singapore, Taiwan, Costa Rica, El Salvador, Guatemala, Honduras, Nicaragua, Panama, New Zealand, Brunei, Malaysia, Aruba, Chile, Uzbekistan, Korea, Peru, Netherlands Antilles, Romania, Italy, U.A.E., Pakistan, Bahrain, Argentina, Qatar, Tanzania, Dominican Republic, Portugal, Slovak Republic, Namibia, Burkina Faso, Ghana, Turkey, Gambia, Nigeria, Morocco, Rwanda, Malta, Benin, Senegal, Poland, Oman, France, Sri Lanka, Uganda, Cape Verde, Samoa, Jamaica, Tonga, Albania, Madagascar, Gabon, Indonesia, Uruguay, India, Paraguay, Maldives, Ethiopia, Thailand, Mali, Canada, Bosnia and Herzegovina, Cameroon, Chad and Australia and beyond. Southern also requests that its certificate authorize it to provide air transportation of property and mail between a point or points in Luxembourg, Iceland, Czech Republic, Germany, Singapore, El Salvador, Guatemala, Slovak Republic, Burkina Faso, Ghana, Gambia, Nigeria, Morocco,

Rwanda, Malta, Benin, Senegal, Poland, Oman, France, Uganda, Cape Verde, Samoa, Tonga, Albania, Madagascar, Gabon, Indonesia, Uruguay, India, Paraguay, Maldives, Ethiopia, Thailand, Mali, Canada, Bosnia and Herzegovina, Cameroon and Chad pursuant to seventh-freedom all-cargo rights granted in open skies agreements with these countries. Southern also asks that it be awarded certificate authority between a point or points in the United States and Hong Kong and a point or points in the U.K. Finally, Southern also requests the same blanket route integration authority granted to other carriers by Order 2006–1–1.

Docket Number: OST–1995–869.

Date Filed: July 27, 2006.

Due Date for Answers, Conforming Applications, or Motion to Modify Scope: August 17, 2006.

Description: Application of Continental Micronesia, Inc. requesting renewal of its Segment 10 (Guam-Tokyo) Route 171 certificate authority to provide scheduled foreign air transportation of persons, property and mail between Guam and Tokyo, Japan.

Docket Number: OST–1996–1423.

Date Filed: July 28, 2006.

Due Date for Answers, Conforming Applications, or Motion to Modify Scope: August 18, 2006.

Description: Application of Continental Airlines, Inc. requesting renewal of Segment 13 of its Route 29–F certificate authorizing Continental to provide scheduled foreign air transportation of persons, property and mail between New York/Newark and Madrid and Barcelona. Continental also requests that its authority be amended to add the coterminal points Malaga and Palma de Mallorca, Spain.

Docket Number: OST–2006–25517.

Date Filed: July 28, 2006.

Due Date for Answers, Conforming Applications, or Motion to Modify Scope: August 18, 2006.

Description: Joint Application of Delta Air Lines, Inc. (''Delta'') and United Air Lines, Inc. (''United'') requesting that the Department approve the transfer to Delta of the route segment on United's certificate of public convenience and necessity for Route 603 authorizing foreign air transportation of persons, property and mail between New York, NY, and London, United Kingdom.

Barbara J. Hairston,

Supervisory Dockets Officer, Alternate Federal Register Liaison.

[FR Doc. E6–13099 Filed 8–9–06; 8:45 am]

BILLING CODE 4910–9X–P

DEPARTMENT OF TRANSPORTATION

Maritime Administration

[USCG–2004–17696]

Freeport McMoRan Energy L.L.C. Main Pass Energy Hub Liquefied Natural Gas Deepwater Port License Application Amendment; Preparation of Environmental Assessment

AGENCY: Maritime Administration, DOT.

ACTION: Notice of amended application; Notice of Intent; Request for comments.

SUMMARY: The Maritime Administration (MARAD), and the U.S. Coast Guard announce that we have received an application amendment for the licensing of the Main Pass Energy Hub (MPEH) natural gas deepwater port, and that the application amendment contains the required information to continue processing the application. This notice summarizes the applicant's plans and the procedures that will be followed in considering this application amendment. The Coast Guard, in coordination with MARAD, will prepare an environmental assessment (EA) as part of the environmental review of this license application amendment. Publication of this notice also begins a public comment period on the application amendment and on the procedures and process to be followed in completing the review.

The application amendment describes the change in project regassification technology from the ''open-loop'' vaporization system originally proposed for Main Pass Energy Hub to a ''closed-loop'' LNG vaporization system. The proposed closed-loop vaporization system is a submerged combustion vaporization system with selective catalytic reduction (SCV/SCR). The proposed facility would be constructed in the Gulf of Mexico in Main Pass Lease Block 299 (MP 299), approximately 16 miles southeast of Venice, Louisiana. A Draft and Final Environmental Impact Statement were published on the original application on June 17, 2005 and March 14, 2006, respectively.

DATES: Material submitted in response to the request for comment must reach the Docket Management Facility by September 11, 2006.

ADDRESSES: Copies of the license application, the Draft and Final Environmental Impact Statements (DEIS/FEIS), the application amendment and associated comments and documentation are available for viewing at the DOT's docket management Web site: *http://dms.dot.gov* under docket number 17696. Address docket submissions for USCG–2004–17696 to: Docket Management Facility, U.S. Department of Transportation, 400 Seventh Street, SW., Washington, DC 20590–0001.

The Docket Management Facility accepts hand-delivered submissions, and makes docket contents available for public inspection and copying at this address in room PL–401 between 9 a.m. and 5 p.m., Monday through Friday, except Federal holidays. The telephone number is 202–366–9329, the fax number is 202–493–2251, and the Web site for electronic submissions or for electronic access to docket contents is *http://dms.dot.gov.*

FOR FURTHER INFORMATION CONTACT: Roddy C. Bachman, U.S. Coast Guard, telephone: 202–372–1451, e-mail: *rbachman@comdt.uscg.mil.* If you have questions on viewing the docket, call Renee V. Wright, Program Manager, Docket Operations, telephone: 202–493–0402.

SUPPLEMENTARY INFORMATION:

Receipt of Application Amendment

On May 31, 2006, the Coast Guard and MARAD received an amendment for the Main Pass Energy Hub deepwater port license application from Freeport McMoRan Energy L.L.C.

Background

The construction and operation of a deepwater port must be authorized by the Secretary of Transportation (as delegated to the Administrator of MARAD). Before a license decision is made, the DWPA and the implementing regulations found at 33 CFR part 148 et seq. provide for an application review following requirements set forth in the DWPA, the National Environmental Policy Act (NEPA), and other applicable laws and regulations. To comply with this requirement, the Coast Guard and MARAD, as the lead federal agencies for the license application review process under the DWPA and NEPA, completed a Draft EIS that was released on June 17, 2005. Workshops and public hearings were held in Grand Bay, Alabama, New Orleans, Louisiana, and Pascagoula, Mississippi to allow public comment and involvement. A Final EIS was released on March 14, 2006 and public hearings were held in each Adjacent Coastal State to comply with the requirements of the DWPA. During this public interest review process, extensive public and agency comments were submitted that discussed the project and the SCV and open rack vaporization (ORV) technologies as reasonable alternatives for the regasification

technology for the project. For this and other reasons, the Final EIS included a robust and detailed discussion and evaluation of both SCV and ORV technologies.

The applicant is now proposing in this application amendment to change the project to use SCV in the place of ORV. Although SCV/SCR was fully evaluated as a reasonable alternative in sufficient detail to provide an in-depth public interest review of that alternative, the SCV/SCR system described in the FEIS was a somewhat generic system based on an existing application of this technology at an onshore LNG facility. The application amendment contains the actual design that would be used, and while very similar to the more generic system described in the FEIS, the expanded and refined information regarding the SCV/SCR warrants development of additional environmental evaluation and review. Following review and coordination of the amendment between MARAD, the Coast Guard, EPA, NOAA, and the U.S. Army Corps of Engineers (USACE), MARAD and the Coast Guard have determined that an Environmental Assessment will provide the appropriate level of NEPA review and analysis. The decision is based upon a finding that the proposed amendment: (i) Does not make substantial changes in the proposed action that are relevant to environmental concerns; and, (ii) there are no significant new circumstances or information relevant to environmental concerns and bearing on the proposed action or its impacts. Therefore, our evaluation confirms that the EA is an appropriate document to satisfy the DWPA and NEPA requirements in this situation. This process, preparation of an EA that describes the project changes and focuses the evaluation on the amendment, using and incorporating by reference the recently published FEIS, will meet the statutory requirements and intent of NEPA and the DWPA by providing a detailed environmental assessment of the changes. The process will allow ample opportunity for meaningful public comment and involvement. Our initial review of the changes proposed in the application amendment indicates a reduction in impacts in several key resource areas that were originally identified with the ORV technology. In addition, a number of comments from the public, and State and Federal agencies discussed and supported SCV as a preferred alternative.

The Coast Guard will consider comments on the application amendment, the proposed changes (including the level of significance of the changes), and on the determination and process of using an EA for the environmental evaluation. Following completion and release of the EA, there will be a second public notice and a 45 day public comment period where the Coast Guard and MARAD will receive comments on both the EA and the amended application. Public hearings in the adjacent coastal states will be held approximately 2 weeks after release of the EA. A 45 day comment period will follow the public hearings during which the Governors of the adjacent coastal states may approve, disapprove or remain silent on the application, and the EPA Administrator will also be afforded an opportunity to inform the MARAD Administrator if the deepwater port as proposed would not conform with the applicable provisions of the Clean Air Act, the Clean Water Act, or the Marine Protection, Research and Sanctuaries Act. Within 90 days of the final public hearing, MARAD will issue a record of decision (ROD) on the application.

You can address any questions about the proposed action or the EA process to the Coast Guard project manager identified in **FOR FURTHER INFORMATION CONTACT**.

Request for Comments

We request public comments or other relevant information on the application amendment and/or the environmental evaluation process described in this notice. Please reference the application amendment and the EIS that are available on the docket. You can submit material to the Docket Management Facility during the public comment period (see **DATES**). MARAD and the Coast Guard will consider all comments submitted during the public comment periods. Although MARAD and the Coast Guard have published a FEIS providing a full and complete evaluation of other aspects of the application, and this EA will focus on the application amendment, we will accept and consider comments on any aspect of the project or the process.

Submissions should include:

- Docket number USCG–2004–17696.
- Your name and address.
- Your reasons for making each comment or for bringing information to our attention.

Submit comments or material using only one of the following methods:

- Electronic submission to DMS, *http://dms.dot.gov.*
- Fax, mail, or hand delivery to the Docket Management Facility (see **ADDRESSES**). Faxed or hand delivered submissions must be unbound, no larger than 8½ by 11 inches, and suitable for copying and electronic scanning. If you mail your submission and want to know when it reaches the Facility, include a stamped, self-addressed postcard or envelope. Regardless of the method used for submitting comments or material, submissions will be posted, without change, to the DMS Web site (*http://dms.dot.gov*), and will include any personal information you provide. Therefore, submitting this information makes it public. You may wish to read the Privacy Act notice that is available on the DMS Web site, or the Department of Transportation Privacy Act Statement that appeared in the **Federal Register** on April 11, 2000 (65 FR 19477).

You may view docket submissions at the Docket Management Facility (see **ADDRESSES**), or electronically on the DMS Web site.

By Order of the Maritime Administrator.

Dated: August 7, 2006.

Joel C. Richard,

Secretary, Maritime Administration.

[FR Doc. E6–13097 Filed 8–9–06; 8:45 am]

BILLING CODE 4910–81–P

DEPARTMENT OF TRANSPORTATION

Surface Transportation Board

[STB Ex Parte No. 661]

Rail Fuel Surcharges

AGENCY: Surface Transportation Board, DOT.

ACTION: Notice of proposed requiremetns regarding rail fuel surcharges.

SUMMARY: The Surface Transportation Board has instituted a proceeding to seek public comments on proposed measures regarding railroad practices involving fuel surcharges. These changes are intended to address concerns raised at the Board's public hearing on May 11, 2006, and in written comments received in this proceeding.

DATES: Comments are due on September 25, 2006.

ADDRESSES: Comments may be submitted either via the Board's e-filing format or in the traditional paper format. Any person using e-filing should comply with the instructions found on the Board's *http://www.stb.dot.gov* Web site, at the ''E–FILING'' link. Any person submitting a filing in the traditional paper format should send an original and 10 paper copies of the filing (referring to STB Ex Parte No. 661) to: Surface Transportation Board, 1925 K Street, NW., Washington, DC 20423–0001.

FOR FURTHER INFORMATION CONTACT: Joseph Dettmar, (202) 565–1609. [Assistance for the hearing impaired is available through the Federal Information Relay Service (FIRS) at 1–800–877–8339.]

SUPPLEMENTARY INFORMATION: The Surface Transportation Board has instituted a proceeding to seek public comments on the following proposed measures regarding railroad practices involving fuel surcharges. First, pursuant to the Board's proposed changes, a carrier wishing to assess what purports to be a fuel surcharge would need to develop a means of computing the surcharge that is more closely linked to the increases in the portion of its fuel costs that is attributable to the movement to which the fuel surcharge is applied. Second, carriers would be prohibited from ''double dipping'' by charging for the same increases in fuel costs for the same shipment both through a fuel surcharge and through application of a rate escalator that is based on an index such as the Board's Railroad Cost Adjustment Factor without first subtracting out any fuel cost component from that index. Third, railroads would be required to use a single, uniform index for measuring increases in the fuel costs—the Energy Information Administration ''U.S. No. 2 Diesel Retail Sales by All Sellers (Cents per Gallon).'' Finally, each Class I railroad would submit a monthly report to the Board showing its actual total fuel costs, total fuel consumption and total fuel surcharge revenues, as well as how much of its total fuel surcharge revenues are shared with its shortline connections. The Board seeks public comment on these proposals.

In a decision served on August 3, 2006, the Board has discussed each of these proposals in detail and explained how each addresses concerns raised in this proceeding. Because these proposals have significance for rail carriers and their shippers, all interested parties are invited to comment.

Additional information is contained in the Board's decision. To obtain a free copy of the full decision, visit the Board's *http://www.stb.dot.gov* Web site.

The Board certifies that the proposed rules would not have a significant economic impact on a substantial number of small entities.

These actions should not significantly affect the quality of the human environment. While we do not believe these actions would have a substantial effect on the conservation of energy resources, any effect they might have should be beneficial.

Decided: August 3, 2006.

By the Board, Chairman Buttrey and Vice Chairman Mulvey.

Vernon A. Williams,

Secretary.

[FR Doc. E6–12982 Filed 8–9–06; 8:45 am]

BILLING CODE 4915–01–P

Corrections

Federal Register

Vol. 71, No. 154

Thursday, August 10, 2006

This section of the FEDERAL REGISTER contains editorial corrections of previously published Presidential, Rule, Proposed Rule, and Notice documents. These corrections are prepared by the Office of the Federal Register. Agency prepared corrections are issued as signed documents and appear in the appropriate document categories elsewhere in the issue.

DEPARTMENT OF DEFENSE

Department of the Army

Availability of the Record of Decision for the Construction and the Operation of a Battle Area Complex and a Combined Arms Collective Training Facility Within U.S. Army Training Lands in Alaska

Correction

In notice document 06–6639 beginning on page 43718 in the issue of Wednesday, August 2, 2006, make the following correction:

On page 43719, in the first column, under the heading **FOR FURTHER INFORMATION CONTACT**, in the last line, ''*kirk.gohle@richardson.army.mil*'' should read ''*kirk.gohlke@richardson.army.mil*''.

[FR Doc. C6–6639 Filed 8–9–06; 8:45 am]

BILLING CODE 1505–01–D

DEPARTMENT OF HOUSING AND URBAN DEVELOPMENT

[Docket No. FR–5041–N–28]

Notice of Proposed Information Collection: Comment Request; Manufactured Home Construction and Safety Standards Program

Correction

In notice document 06–6563 appearing on page 43206 in the issue of Monday, July 31, 2006, make the following correction:

On page 43206, in the first column, under the heading **DATES**, in the first and second lines, ''September 29, 2007'' should read ''September 29, 2006''.

[FR Doc. C6–6563 Filed 8–9–06; 8:45 am]

BILLING CODE 1505–01–D

Federal Register

Thursday,
August 10, 2006

Part II

Consumer Product Safety Commission

16 CFR Parts 1307, 1410, 1500 and 1515
Standards for All Terrain Vehicles and Ban of Three-Wheeled All Terrain Vehicles; Proposed Rule

CONSUMER PRODUCT SAFETY COMMISSION

16 CFR Parts 1307, 1410, 1500 and 1515

Standards for All Terrain Vehicles and Ban of Three-Wheeled All Terrain Vehicles; Notice of Proposed Rulemaking

AGENCY: Consumer Product Safety Commission.

ACTION: Notice of proposed rulemaking.

SUMMARY: To address the unreasonable risks of injury and death associated with all terrain vehicles (''ATVs''), the Commission is proposing rules for adult and youth ATVs. The proposed rules include requirements concerning the mechanical operation of ATVs, requirements for providing safety information about operating ATVs (such as through labeling and training), and requirements for certification, testing and recordkeeping. The proposed standards would apply to adult single-rider and tandem ATVs and to youth ATVs. The Commission is also proposing a rule to ban three-wheeled ATVs. The proposed rules are issued under the authority of both the Consumer Product Safety Act (''CPSA'') and the Federal Hazardous Substances Act (''FHSA'').

DATES: Written comments in response to this document must be received by the Commission no later than October 24, 2006. Comments on elements of the proposed rule that, if issued in final form would constitute collection of information requirements under the Paperwork Reduction Act, may be filed with the Office of Management and Budget (''OMB'') and with the Commission. Comments will be received by OMB until October 10, 2006.

ADDRESSES: Comments should be filed by email to *cpsc-os.gov*. Comments also may be filed by telefacsimile to (301) 504–0127 or they may be mailed or delivered, preferably in five copies, to the Office of the Secretary, U.S. Consumer Product Safety Commission, 4330 East West Highway, Bethesda, Maryland 20814–4408; telephone (301) 504–7923. Comments should be captioned ''ATV NPR.''

Comments to OMB should be directed to the Desk Officer for the Consumer Product Safety Commission, Office of Information and Regulatory Affairs, OMB, Washington, DC 20503. The Commission asks commenters to provide copies of such comments to the Commission's Office of the Secretary, with a caption or cover letter identifying the materials as copies of comments submitted to OMB on the proposed collection of information requirements for the proposed ATV standard.

FOR FURTHER INFORMATION CONTACT: Elizabeth Leland, Project Manager, ATV Safety Review, Directorate for Economic Analysis, Consumer Product Safety Commission, 4330 East West Highway, Bethesda, Maryland 20814–4408; telephone (301) 504–7706 or e-mail: *eleland@cpsc.gov.*

SUPPLEMENTARY INFORMATION:

A. Background

The Commission is proposing rules that will cover single-rider ATVs, tandem ATVs (intended for two people) and ATVs intended for children under 16 years of age.[1] These proposed rules include proposed standards that specify mechanical requirements for ATVs and informational requirements so that ATV purchasers and operators will have safety information about ATVs. The Commission is also proposing to ban three-wheeled ATVs. The Commission believes that these proposed rules are necessary to address an unreasonable risk of injury and death associated with ATVs.

ATVs were first available in this country in the early 1970's, and became increasingly popular in the early 1980's. With their rise in popularity, the number of ATV-related incidents also rose. On May 31, 1985, the Commission published an advance notice of proposed rulemaking (''ANPR'') stating the Commission's safety concerns and outlining options the Commission was considering to address ATV-related hazards. 50 FR 23139. In 1987, the Commission filed a lawsuit under section 12 of the CPSA against the five companies that were major ATV distributors at that time to declare ATVs an imminently hazardous consumer product, see 15 U.S.C. 2061(b)(1).[2] The lawsuit was settled by Consent Decrees filed on April 28, 1988 that were effective for ten years.

1. The Consent Decrees

In the Consent Decrees, the distributors agreed to: (1) Halt the distribution of three-wheel ATVs, (2) attempt ''in good faith'' to devise a voluntary performance standard satisfactory to the Commission; (3) label ATVs with four types of warnings, the language and format of which were specified in the Consent Decrees; (4) supplement existing owners manuals with safety text and illustrations specified in the Consent Decrees and to prepare new owners manuals with specified safety information; (5) provide point of purchase safety materials meeting guidelines specified by the Consent Decrees, including hangtags, a safety video, and other safety information; (6) and offer a rider training course to ATV purchasers and members of their immediate families at no cost. In addition, the Consent Decrees contained several media and marketing provisions.

The distributors also agreed in the Consent Decrees that they would ''represent affirmatively'' that ATVs with engine sizes between 70 and 90 cc should be used only by those age 12 and older, and that ATVs with engine sizes larger than 90 cc should be used only by those 16 and older. Because distributors did not sell their products directly to consumers but through dealerships (which were not parties to the Consent Decrees), distributors agreed to ''use their best efforts to reasonably assure'' that ATVs would ''not be purchased by or for the use of'' anyone who did not meet the age restrictions. While the Consent Decrees were in effect, the distributors entered into agreements with the Commission and the Department of Justice agreeing to monitor their dealers to determine whether they were complying with the age recommendations and to terminate the franchises of dealers who repeatedly failed to provide the appropriate age recommendations.

2. Development of the Voluntary Standard for Single-Rider ATVs

Industry had begun work on a voluntary standard before the Consent Decrees were in place. Distributors that were parties to the Decrees agreed to work in good faith to develop a voluntary standard that was satisfactory to the Commission within four months of the signing of the Consent Decrees. The five companies, working through the Specialty Vehicle Institute of America (''SVIA''), submitted a standard

[1] The Commission voted unanimously to issue the notice of proposed rulemaking with changes to address youth and adult ATV training (subsection (g)). Commissioner Nancy A. Nord and Commissioner Thomas H. Moore voted for additional changes not included in Chairman Stratton's vote, including additional instructions to staff and request for comments, a new subsection and modifying language in the preamble. Commissioners Nord and Moore issued statements which are available from the Commission's Office of the Secretary or from the Commission's Web site, *http://www.cpsc.gov.*

[2] The five distributors were American Honda Motor Co., Inc., American Suzuki Motor Corp., Polaris Industries, L.P., Yamaha Motor Corp., USA, and Kawasaki Motors Corp., USA. In 1996, Arctic Cat, Inc. began manufacturing ATVs and entered into an Agreement and Action Plan with the Commission in which the company agreed to take substantially the same actions as required under the Consent Decrees.

for approval as an American National Standards Institute (''ANSI'') standard in December 1988. On January 13, 1989, the Commission published a notice in the **Federal Register** concluding that the voluntary standard was ''satisfactory'' to the Commission.[3] 54 FR 1407. The standard, known as ANSI/SVIA 1–2001, *The American National Standard for Four Wheel All-Terrain Vehicles—Equipment, Configuration, and Performance Requirements,* was first published in 1990, and was revised in 2001. The ANSI standard has requirements for the mechanical operation of ATVs, but does not contain any provisions concerning labeling, owners manuals or other information to be provided to the purchaser because such requirements were stated in the Consent Decrees that were in effect when the ANSI standard was developed. As discussed in section G.3, ANSI now has a draft voluntary standard for tandem ATVs.

3. ATV Action Plans/Letters of Undertaking

The Consent Decrees expired in April 1998. The Commission entered into voluntary ''Action Plans,'' also known as ''Letters of Undertaking'' or ''LOUs,'' with eight major ATV distributors (the five who had been parties to the Consent Decrees, plus Arctic Cat, Inc., Bombardier, Inc. and Cannnondale Corporation, which no longer makes ATVs) *See* 63 FR 48199 (summarizing Action Plans).[4] Except for Bombardier's, all of the Action Plans took effect in April 1998 at the expiration of the Consent Decrees. (Bombardier's took effect in 1999 when the company began selling ATVs.) The companies agreed to continue many of the actions the Consent Decrees had required concerning the age recommendations, point of sale information (i.e., warning labels, owners manuals, hang tags, safety alerts, and safety video), advertising and promotional materials, training, and stopping distribution of three-wheeled ATVs.

4. Termination of Previous Rulemaking

As mentioned above, the Commission issued an ANPR concerning ATVs in 1985, but chose to pursue legal action under section 12 of the CPSA instead of taking regulatory action. In 1991, the Commission terminated the rulemaking proceeding it had started with the 1985 ANPR. 56 FR 47166. The Commission observed in its termination notice that, at the time of the termination, the Consent Decrees were in effect, the five ATV distributors had agreed to conduct monitoring of dealers' compliance with the Consent Decrees' provisions, and ATV-related injuries and deaths were declining. The ATV-related injury rate for the general population (per ATV) had dropped by about 50 percent between 1985 and 1989, and ATV-related fatalities had declined from an estimated 347 in 1986 to about 258 in 1989. Id. At 47170.

The Commission's termination of its rulemaking proceeding was challenged by the Consumer Federation of America (''CFA'') and U.S. Public Interest Research Group (''PIRG'') arguing that withdrawing the ANPR rather than pursuing a ban on the sale of new adult-size ATVs for use by children under 16 was arbitrary and capricious. The court upheld the Commission's decision. *Consumer Federation of America* v. *Consumer Product Safety Commission*, 990 F.2d 1298 (D.C. Cir. 1993). The court noted that it was reasonable for the Commission to determine the effectiveness of the Consent Decrees and monitoring activities before considering whether additional action would be necessary. Id. at 1306.

5. CFA's Petition and the Chairman's Memo

In August 2002, CFA and eight other groups requested that the Commission take several actions regarding ATVs. CPSC docketed the portion of the request that met the Commission's docketing requirements in 16 CFR § 1051.5(a). That request asked for a rule banning the sale of adult-size four wheel ATVs for the use of children under 16 years old. The Commission solicited public comments on the petition. 67 FR 64353 (2002). In 2003, the Commission held a public hearing in West Virginia, and the Chairman held hearings in Alaska and New Mexico to hear oral presentations from the public about ATVs. The staff prepared a briefing package analyzing the petition and recommending that the Commission deny the petition (available on the Commission's Web site at *www.cpsc.gov/library/foia/foia05/brief/briefing.html*). (After an initial vote on October 6, 2005 to defer a decision on the petition, the Commission voted 2–1 to deny the petition when it voted on July 12, 2006 to issue this NPR. The statements issued by Commissioner Nord and Commissioner Moore, referenced in footnote 1, also discuss their votes on the petition.)

On June 8, 2005, Chairman Hal Stratton delivered a memorandum to the staff asking the staff to review all ATV safety actions and make recommendations on a number of issues. The memo directed the staff to consider whether: (1) The current ATV voluntary standards are adequate in light of trends in ATV-related deaths and injuries; (2) the current ATV voluntary standards or other standards pertaining to ATVs should be adopted as mandatory standards by the Commission; and (3) other actions, including rulemaking, should be taken to enhance ATV safety. The memo also identified several specific issues for the staff to review, namely: (1) Pre-sale training/certification requirements; (2) enhanced warning labels; (3) formal notification of safety rules by dealers to buyers; (4) the addition of a youth ATV model appropriate for 14-year olds; (5) written notification of child injury data at the time of sale; (6) separate standards for vehicles designed for two riders; and (7) performance safety standards. The memo directed the staff to give particular attention to improving the safety of young riders.

6. 2005 ANPR

On October 14, 2005, the Commission published an ANPR that began this proceeding. 70 FR 60031. The ANPR reviewed the history of the Commission's involvement with ATVs, summarized the ANSI/SVIA–1–2001 standard, described regulatory and non-regulatory options to address ATV-related injuries and deaths, and requested comments from the public. Comments on the ANPR and the Commission's responses are discussed at section H.

B. Statutory Authority

This proceeding is conducted pursuant to the Consumer Product Safety Act (''CPSA'') and the Federal Hazardous Substances Act (''FHSA''). All Terrain Vehicles are ''consumer products'' which can be regulated by the Commission under the authority of the CPSA. See 15 U.S.C. 2052(a). However, the FHSA provides the Commission with regulatory authority over articles intended for use by children. See 15 U.S.C. 1261(f)(1)(D). See also 15 U.S.C. 2079(d) (requiring, that the Commission regulate under the FHSA if the risk of injury at issue can be eliminated or sufficiently reduced by action under the FHSA unless the Commission finds by rule that it is in the public interest to

[3] In the FR notice, the Commission noted that it ''specifically reserved its rights under the consent decrees to institute certain enforcement or rulemaking proceedings in the future.'' 54 FR 1407.

[4] These documents are available on CPSC's Web site at *www.cpsc.gov/library/foia/foia98/fedreg/honda.pdf; www.cpsc.gov/library/foia/foia98/fedreg/suzuki.pdf; www.cpsc.gov/library/foia/foia98/fedreg/kawasaki.pdf; www.cpsc.gov/library/foia/foia98/fedreg/polaris; www.cpsc.gov/library/foia/foia98/fedreg/yamaha.pdf; www.cpsc.gov/library/foia/foia98/fedred/arctic.pdf; and www.cpsc.gov/library/foia/foia99/pubcom/bobard.pdf.*

regulate under the CPSA). Thus, the Commission is proposing standards for adult 4-wheel ATVs and a ban of adult three-wheeled ATVs under the CPSA, and is proposing a standard for youth ATVs, which includes a ban of three-wheeled ATVs, under the FHSA.

1. The CPSA

Section 7 of the CPSA authorizes the Commission to issue consumer product safety standards that consist of performance requirements and/or requirements for warnings or instructions. Id. 2056(a). The requirements of the standard must be ''reasonably necessary to prevent or reduce an unreasonable risk of injury associated with such product.'' Id.

Section 8 of the CPSA authorizes the Commission to issue a rule declaring a consumer product a ''banned hazardous product'' when the Commission finds that: The product is being, or will be, distributed in commerce; the product presents an unreasonable risk of injury; and no feasible consumer product safety standard would adequately protect the public from the risk of injury. Id. 2057.

Section 9 of the CPSA specifies the procedure the Commission must follow to issue a consumer product safety standard or a ban under section 8. In accordance with section 9, the Commission commenced this rulemaking by issuing an ANPR identifying the product and the risk of injury, summarizing regulatory alternatives, and inviting comments or suggested standards from the public. Id. 2058(a). 70 FR 60031 (2005). The Commission considered the comments submitted in response to the ANPR, and has decided to issue these proposed rules and a preliminary regulatory analysis in accordance with section 9(c) of the CPSA. Next, the Commission will consider the comments received in response to the proposed rules and decide whether to issue final rules and a final regulatory analysis. 15 U.S.C. 2058(c)–(f).

According to section 9(f)(1) of the CPSA, before promulgating a consumer product safety rule, the Commission must consider, and make appropriate findings to be included in the rule, concerning the following issues: (1) The degree and nature of the risk of injury that the rule is designed to eliminate or reduce; (2) the approximate number of consumer products subject to the rule; (3) the need of the public for the products subject to the rule and the probable effect the rule will have on utility, cost or availability of such products; and (4) means to achieve the objective of the rule while minimizing adverse effects on competition, manufacturing and commercial practices. Id. 2058(f)(1).

According to section 9(f)(3) of the CPSA, to issue a final rule, the Commission must find that the rule is ''reasonably necessary to eliminate or reduce an unreasonable risk of injury associated with such product'' and that issuing the rule is in the public interest. Id. 2058(f)(3)(A) & (B). In addition, if a voluntary standard addressing the risk of injury has been adopted and implemented, the Commission must find that (1) the voluntary standard is not likely to eliminate or adequately reduce the risk of injury, or that (2) substantial compliance with the voluntary standard is unlikely. Id. 2058(f)(3)(D). The Commission also must find that expected benefits of the rule bear a reasonable relationship to its costs and that the rule imposes the least burdensome requirements that would adequately reduce the risk of injury. Id. 2058(f)(3)(E) & (F).

Other provisions of the CPSA also authorize this rulemaking. Section 27(e) provides the Commission with authority to issue a rule requiring consumer product manufacturers to provide the Commission with such performance and technical data related to performance and safety as may be required to carry out the CPSA, and to give such performance and technical data to prospective and first purchasers. Id. 2076(e). This provision bolsters the Commission's authority under section 7 to require provision of safety-related information such as hangtags, instructional/owners manuals, safety videos, and training.

Section 14 of the CPSA authorizes the Commission to issue a rule requiring certification that a product meets a consumer product safety standard. Id. 2063(c). Section 14 also authorizes the Commission to prescribe, by rule, reasonable testing programs for consumer products subject to a consumer product safety rule. Id. 2063(b).

Finally, section 16 of the CPSA authorizes the Commission to issue rules requiring establishment and maintenance of records needed to implement the CPSA or to determine compliance with rules or orders issued under the CPSA. Id. 2065(b).

2. The FHSA

The FHSA requires proceedings and findings similar to those required by the CPSA. Section 2(f)(1)(D) of the FHSA defines ''hazardous substance'' to include any toy or other article intended for use by children that the Commission determines, by regulation, presents an electrical, mechanical, or thermal hazard. 15 U.S.C. 1261(f)(1)(D). An article may present a mechanical hazard if its design or manufacture presents an unreasonable risk of personal injury or illness during normal use or when subjected to reasonably foreseeable damage or abuse. 15 U.S.C. 1261(s).

Under section 2(q)(1)(A) of the FHSA, an article intended for use by children, which is a hazardous substance (as defined in the FHSA) accessible by a child, is banned. 15 U.S.C. 1261(q)(1)(A). Under this authority, the Commission can issue a rule stating that if a particular article intended for use by children does not meet requirements that the Commission specifies by rule, the item is banned. *See Forester* v. *Consumer Product Safety Commission,* 559 F.2d 774, 782 (D.C. Cir. 1977).

Section 3(f) through 3(i) of the FHSA, 15 U.S.C. 1262(f)-(i), describes the procedures to promulgate a regulation determining that an article intended for children presents an electrical, mechanical, or thermal hazard. The procedures are the same as those required for a CPSA rule discussed above. 15 U.S.C. 1262(f) through (i).

Before the Commission can issue this type of final rule under the FHSA, it must make many of the same findings necessary for a final CPSA rule: (1) if an applicable voluntary standard has been adopted and implemented, that compliance with the voluntary standard is not likely to adequately reduce the risk of injury, or compliance with the voluntary standard is not likely to be substantial; (2) that benefits expected from the regulation bear a reasonable relationship to its costs; and (3) that the regulation imposes the least burdensome alternative that would adequately reduce the risk of injury. Id. 1261(i)(2).

Section 10 of the FHSA authorizes the Commission to issue regulations ''for the efficient enforcement of'' the FHSA. Id. 1269(a). This provision gives the Commission authority to issue the requirements for certification, testing and recordkeeping in the youth ATV standard.

C. The Product

1. What's Covered by the Proposed Rules

An ATV is a motorized vehicle with three or four broad, low pressure tires (less than 10 pounds per square inch) a seat designed to be straddled by the operator, handlebars for steering, and it is designed for off-road use. Most ATVs are designed for use by only one person. However, some companies have developed ATVs intended for use by the operator and one passenger. These

ATVs are referred to in this notice as tandem ATVs. The proposed rules the Commission is issuing cover three-wheeled ATVs, four-wheeled adult ATVs intended for single riders, four-wheeled adult tandem ATVs, and ATVs intended for children under 16 years of age (referred to here as youth ATVs).

2. Market and Sales Information

The market for ATVs has increased greatly since they were first introduced over thirty years ago. The SVIA, an ATV trade association, estimated that in 2005, there were 6.9 million ATVs in use. The market is made of seven major distributors of ATVs (the companies that have entered into voluntary LOUs with the Commission and are represented by SVIA) and new entrants that import ATVs to the U.S. Sales by both groups have increased over the past decade. U.S. retail sales of ATVs by the seven major distributors have increased from an estimated 293,000 ATVs sold in the U.S in 1995 to an estimated 921,000 ATVs sold in the U.S. in 2005. [4] [5]

3. Imports

Imports for the new entrants have increased markedly in recent years. In the late 1990's, imports comprised a small portion of the ATV market, near zero. In 2001, imports were estimated to account for about 5 percent of total U.S. sales. By 2004, imports had increased to 10 percent of the total U.S. market. [4]

In 2006, Commission staff has identified over 80 importers of ATVs. Most of these firms import other products in addition to ATVs, such as powered scooters, dirt bikes, go-carts and snow mobiles. A recent trade report estimated that 100 to 150 Chinese manufacturers and an estimated 22 Taiwanese firms exported ATVs worldwide in 2005. The trade report does not indicate what share of these firms'' output is exported to the U.S., but based on another trade analysis, Commission staff estimates that approximately 80,000 ATVs were exported from China to the U.S. in 2004 and approximately 14,000 ATVs were exported from Taiwan in that year. There also appear to be imports from other countries in Europe and Southeast Asia (notably South Korea and Vietnam), but the staff does not have information on the extent of such imports. [4]

Staff has observed that imported ATVs may lack some or all of the labeling specified in the LOUs. On such ATVs, labels may be unclear, translated incorrectly, or in a language other than English. Staff has also found that owner's manuals for imported ATVs may not provide information that could be understood by U.S. consumers (*e.g.*, information that conflicts with labeling, measurements in unfamiliar measuring systems). [8]

4. Marketing

The major distributors have traditionally marketed ATVs through franchises, either as free-standing locations or in conjunction with other related retail operations (such as motorcycle retailers). [4]

Imported ATVs are sold in a variety of ways. They may be sold through distributors, including some of the major distributors. Foreign firms also market through U.S. importer/wholesalers who, in turn, may market the products to retailers (including such mass marketers as Pep Boys, Fleet and Farm, Wal-Mart, Sam's Club, and BJ's). Some importer/suppliers also have dealer networks. [4]

Imported ATVs also are offered for sale directly to consumers through import brokers who transship imported units to retailers (or consumers), often without taking physical control of the products. Web sites offering ATVs for sale are ubiquitous. A recent CPSC surveillance effort reported that there were literally hundreds of Web sites offering ATVs for sale, but the staff does not know the extent of actual purchases through the Internet. [4]

5. Consumer Prices

The staff's 2004 market study observed that the major distributors' suggested retail price for ATVs ranged from about $2,000 to $8,000; the median suggested retail price was $5,150. As a subgroup, the price ranges for youth ATVs from these manufacturers was $1,800 to $2,500. The median suggested retail price for youth ATVs was about $2,300. [4]

A recent staff Internet search of new ATVs with brand names other than those of the North American distributors, offered for sale by business entities, found youth ATV models ranging from about $320 to $950 each, with an average price of about $630. Larger ATVs ranged from about $600 to $2,400, with an average of $1,340. The cited prices included the cost of shipping to points within the lower 48 states from the dealers' U.S. warehouses. Thus, it appears that ATVs from importers/new entrants may have a significant price advantage over the major distributors' products. [4]

D. Risk of Injury

As noted in the 2005 ANPR, the most recent annual report of ATV deaths and injuries that the Commission has issued is the 2004 Annual Report (which was issued in September 2005). According to that report, the Commission had reports of 6,494 ATV-related deaths that have occurred since 1982. Of these, 2,019 (31 percent of the total) were to children under 16 years of age and 845 (13 percent of the total) were to children under 12 years of age. According to the 2004 Annual Report, 569 ATV-related deaths were reported to the Commission for 2003. Deaths reported to the Commission represent a minimum count of ATV-related deaths. To account for ATV-related deaths that are not reported to the Commission, the staff calculates an estimated number of ATV deaths. The most recent estimate of ATV-related deaths for 2003 is 740. [3]

CPSC collects information on hospital emergency room treated injuries. The estimated number of ATV-related injuries treated in hospital emergency rooms in 2004 was 136,100. This is an increase of about eight percent over the 2003 estimate. The estimated number of injuries to children under 16 in 2004 was 44,700 (about 33 percent of the total estimated injuries for 2004). [3]

The staff also estimates the risk of injury and the risk of death per 10,000 ATVs in use. According to the 2004 Annual Report, the estimated risk of injury for four-wheel ATVs for 2004 was 187.9 injuries per 10,000 four-wheel ATVs in use. A recent high in the estimated risk of injury occurred at 200.9 in 2001. The estimated risk of death for four-wheel ATVs in 2003 was 1.1 deaths per 10,000 four-wheel ATVs in use. In 1999, the earliest comparable year due to changes in data collection, the estimated risk of death was 1.4 deaths per 10,000 four-wheel ATVs in use. [3]

Based on injury and exposure studies conducted in 1997 and, most recently, in 2001, the estimated number of ATV-related injuries treated in hospital emergency rooms rose from 52,800 to 110,100 (a 109 percent increase). Injuries to children under 16 rose 60 percent. During these years, the estimated number of ATV drivers rose from 12 to 16.3 million (a 36 percent increase); the estimated number of driving hours rose from 1,580 to 2,360 million (a 50 percent increase); and the estimated number of ATVs rose from 4 to 5.6 million (a 40 percent increase). The chief finding of the 2001 Report was that increases in the estimated

[5] Numbers in brackets refer to documents listed at the end of this notice. They are available from the Commission's Office of the Secretary (see ''Addresses'' section above) or from the Commission's web site (*http://www.cpsc.gov/library/foia/foia.html*)

numbers of drivers, driving hours and vehicles did not account for all of the increase in the estimated number of ATV injuries. [3]

E. Children and ATVs

During its involvement with ATVs, the Commission has been particularly concerned with reducing the ATV-related deaths and injuries suffered by children. The Consent Decrees established age guidelines, which the major distributors continue through their Letters of Undertaking. In the Consent Decrees, the major distributors agreed to represent and to make their best efforts to see that their dealers also abided by age recommendations in their dealings with purchasers. These age recommendations were based on the ATV's engine size (measured as cubic centimeter (''cc'') displacement). They established that an ATV with an engine that is larger than 90 cc should be used only by those 16 years of age and older, and that an ATV with an engine size between 70 and 90 cc should be used only by those 12 years of age and older. Thus, ATVs with engine sizes larger than 90 cc have been considered adult ATVs.

Yet, in spite of these efforts through the Consent Decrees and LOUs, recent Commission staff studies have shown that many children ride adult ATVs, and that injury rates are climbing. The Commission's injury and exposure studies indicate that injuries to children under age 16 rose 60 percent from 1997 to 2001. Although the number of children riding ATVs also rose during this period, that increase does not fully account for the rise in incidents.

The age delineations in the Consent Decrees made no mention of speed limits. However, the ANSI/SVIA–1–2001 voluntary standard does categorize youth ATVs by reference to speed limits. The voluntary standard requires that Y–6 ATVs (intended for ages 6–11) have devices to limit their speed to not more than 10 mph and allow upward adjustment to a maximum unrestricted speed of 15 mph. Y–12 ATVs (intended for ages 12–16) have similar requirements to limit speed to not more than 15 mph and allow upward adjustment to a maximum unrestricted speed of 30 mph.

The Commission is proposing to change the categorization of ATVs based on engine size that the Consent Decrees established. Instead the Commission proposes three categories of youth ATVs based on maximum speed of the ATV. The 90cc policy is design restrictive; engine size does not necessarily restrict ATV size, nor does it necessarily regulate maximum unrestricted speed; staff cannot make assumptions (e.g., speed, power, weight, or size) about all ATVs of a certain engine size based solely on the engine displacement values; and the current voluntary standard for ATVs categorizes youth ATVs by speed limiting characteristics, not engine size.

The Commission's ESHF staff considered several sources to determine appropriate categories of ATVs. Based on developmental characteristics, children are typically grouped as: age 5 through 7 or 8; age 8 or 9 through 11 or 12; age 12 through 15; and age 16 and up. Children, of course, do not all develop at the same rate, but these groupings are appropriate for most.

The CPSC staff's Age Determination Guidelines, state that children age 6 through 8 years can operate slow-moving motorized vehicles, and that children age 9 through 12 years can operate motorized vehicles with gear shifting up to 10 miles per hour. The guidelines state a clear demarcation with the teenage years: ''faster [than 10 mph] moving motorized [vehicles] are generally not appropriate even for 12-year-olds because of the difficulty associated with both balancing and steering the vehicle while moving.'' Since ATVs require significant balance and control, it seems most appropriate to have an age division around the late pre-teen/early teenage years. Based on youth attributes described in the Age Determination Guidelines, reasonable youth ATV categories would be Y–6 (''slow-moving,'' no gear shifting), Y–9 (speeds 5–15 mph, gear shifting acceptable) and Y–13 (since the Age Determination Guidelines stop at age 12, no specifications can be made based on them). Additionally, the Age Determination Guidelines mention that 9-to 12-year-olds are generally ''aware of traffic laws, but they are very likely to engage in high-risk behaviors like riding in traffic and stunt riding.''

In addition to cognitive development, appropriate age groupings should account for children's physical size. Analysis of children's physical growth suggests groupings with breaks roughly at around ages 8 to 9 and 11 to 13, acknowledging that growth will be rapid between ages 11 and 16 for both males and females.

Groupings set out in the Age Determination Guidelines can be used to delineate three categories for youth ATVs based on maximum speed of the ATV. For the youngest category, the Age Determination Guidelines indicate that the ATV should be ''slow-moving.'' One method of defining ''slow moving'' could be slow enough to allow parents to walk or jog with the ATV to facilitate supervision. Under this premise, it would be reasonable to set the maximum speed for the slowest youth ATV between the jogging speed and running speed. Research indicates that is about 9 to 10 mph. Based on the Age Determination Guidelines, the next category should be roughly 10 to 15 mph. The Age Determination Guidelines do not extend past 12 years of age, but it is reasonable to assume that the third category could be faster than 10 mph and that older, more experienced teens may be able to handle speeds higher than 10 to 15 mph. The Commission's ESHF staff has found no scientific research to support either raising or lowering the current 30 mph speed limit for teens. Thus, 30 mph is a reasonable top speed for the third category of youth ATVs.

PROPOSED ATV MODELS AND INTENDED AGES

ATV Model age (years)	Speed range
Junior 6 +	10 mph or less.
Pre-teen 9 +	10* – 15 mph.
Teen 12 +	15* – 30 mph.
Adult 16 +	Not restricted.

* With speed limiter.

Although the weight of the ATV can play a role in the suitability of an ATV for a youth, the Commission does not have sufficient information to set an appropriate weight for youth ATVs.

Frame size also plays a role in the appropriateness of an ATV for a child. Several commenters have expressed frustration with the current ATVs available for children because the smaller frames of these ATVs will not fit some 13 to 15 year olds. Establishing categories based on speed limit rather than engine size may encourage manufacturers to offer ATVs with larger frames (and larger engines), but with limited maximum speeds that would be appropriate for children.

The availability of such youth ATVs may shift a number of young riders to youth ATVs rather than larger adult models. This would increase safety. Commission analysis indicates that the injury rate for ATV riders under the age of 16 who are driving adult ATVs is about twice the expected injury rate of those who are driving age-appropriate ATVs. Moreover, these categories may enable more children to receive formal ATV training. The largest and best established formal training programs will not train children under age 16 unless they are riding an appropriate youth model. [8]

The proposed rule also requires that youth ATVs must have automatic

transmissions. Based on the Age Determination Guidelines, ESHF staff believes that manual transmission ATVs are inappropriate for children under 9 years of age. Due to the high cognitive load required to operate complex motorized vehicles, HF staff believes it best to allow all children below 16 years of age to master driving skills before learning to coordinate gear shifting with the many other skills involved when riding.

F. Training

In the 1980s, Commission staff worked with the major ATV distributors to develop the predecessor to the current ATV training course that is offered through the ATV Safety Institute (''ASI''), the non-profit training division of the SVIA. Training is important because operating an ATV seems deceptively easy; steering controls are similar to a bicycle, and the throttle is generally simply lever-operated with the thumb. ATVs are, however, high-speed motorized vehicles that require repeated practice to drive proficiently. Operating an ATV is somewhat comparable to operating other complex motorized vehicles. ATVs have top speeds approaching that of automobiles on highways, yet have as little protection from oncoming objects as a motorcycle. Even at relatively low speeds (20–30 mph) they can take as much skill to operate as an automobile because the operator requires: (1) Situational awareness to negotiate unpaved terrain with both eye-level hazards (trees, other ATVs) and trail-level hazards (ditches, rocks, hidden holes); and (2) quick judgments including not only steering, speed, and braking, but also terrain suitability, weight shifting and other active riding behaviors. [12]

Formal, hands-on training teaches drivers how the ATV responds in situations that are typically encountered. ATV training may act as a surrogate for experience because it exposes new ATV drivers to situations they will encounter when riding off-road and teaches them the proper driving behavior to navigate those situations.[12]

All of the major distributors offer training through the ASI. In spite of the offers of free training and other incentives, relatively few ATV riders take formal safety training. According to a 2004 study by SVIA, only about 7 percent of new purchasers actually took training. The newer entrants to the market do not offer any training with their ATVs. These manufacturers account for about 10 percent of domestic ATV sales, but their share of the market has been increasing. [4 & 12]

The Commission is proposing to require that manufacturers provide purchasers with a certificate for free training for the purchaser and any member of his/her immediate family who meets the age recommendations for the ATV. The benefits of training to new ATV purchasers could be substantial. As stated above, training may act as a surrogate for experience. The greatest risk of injury occurs with inexperienced riders. Staff's analysis of ATV incident data has found a strong inverse relationship between driving experience and the risk of hospital emergency department-treated injury. The analysis indicates that risk in the first year of riding was about 65 percent higher than the risk in the second year, and about twice the risk of the third year. [8]

The proposed rules outline the basic content that a free training course must have. This curriculum is based on CPSC safety messages and the ''ATV Rider's Course Outline'' from the Consent Decrees. In addition to instruction about the basic maneuvers that are necessary to operate an ATV safely, the course must include instruction about the risks of ATV-related deaths and injuries, the importance of safety equipment, and the importance of avoiding the warned against behaviors that are stated in the general warning label (such as children not riding ATVs, not driving on paved roads, etc.). [12]

In many ways, training is essentially an extension of the warning labels and owners instruction manuals. The training course provides the rider with a fuller understanding of the risks involved in riding an ATV and of the actions he/she can take to avoid or reduce these risks.

G. Description of Proposed Standards

1. General

The proposed standards draw from the ANSI/SVIA 1–2001 standard for four-wheel ATVs (for single rider ATVs), the draft voluntary standard for tandem ATVs, the Consent Decrees, and the LOUs. The Commission has pulled together elements from all of these sources to construct proposed standards with the goal of reducing ATV-related deaths and injuries. Both the adult and youth standards require that ATVs meet requirements for the mechanical operation of the ATV, informational/point of sale requirements, and certification and recordkeeping requirements.

The Commission believes that the reduction of deaths and injuries from both adult and youth ATVs will require the active participation and cooperation of the ATV industry and we encourage their recommendations for additional safety provisions to the proposed mandatory standards. The creation of viable, safer youth ATVs will be an important component of any final rule.

2. Requirements for Adult Single Rider ATVs

a. Definitions

All terrain vehicle or ATV is defined as ''a three-or four-wheeled motorized vehicle that travels on low pressure tires, has a seat designed to be straddled by the operator (and a passenger if provision is made for carrying a passenger), has handlebars for steering, and is intended for off-road use on non-paved surfaces.'' The definition of ATV states that for purposes of this part, an ATV is one that is intended for an operator 16 years of age or older. The term ''manufacturer'' is defined to include an importer for purposes of the ATV standards. Many of the definitions in the proposed standard are derived from the ANSI/SVIA–1–2001 standard.

b. Equipment and Configuration Requirements

General. Section 1410.5 proposes requirements for various aspects of the mechanical operation of adult single-rider ATVs. Many of these requirements are substantially the same as requirements of the ANSI/SVIA–1–2001 voluntary standard. However, the CPSA requires that consumer product safety standards be stated as performance rather than design standards. Thus, some requirements that were stated in the ANSI standard in terms of design have been modified to establish performance requirements.

The provisions of this section ensure that there will be uniformity in the basic operation of ATVs from one make or model to another. Proposed configuration requirements for vehicle controls, indicators, and gearing ensure the standardized instrumentation and safety features of current ATVs. It is important that the location and method of operation of safety related controls, such as brake controls and engine stop switch, be standardized to reduce operator confusion. The specified requirements are consistent with current ATV practice which is based on the National Highway Traffic Safety Administration requirements for motorcycle control location and operation requirements (49 CFR 571.123). [5]

Operator Foot Environment. Proposed performance requirements for operator foot environment ensure adequate vehicle configuration that reduces inadvertent contact between the

operator's feet and the ground or the ATV's rear wheels. Operator foot contact with the ground or the ATV's rear wheels has been identified as a hazard pattern among ATV-related injuries. Differing zones are defined for ATVs equipped with footpegs (designed to support the operator's foot with a relatively narrow bar), and footboards (designed to support the operator's foot with a platform-type structure). [5]

Lighting. Proposed lighting requirements mandate headlamps, tail lamps, and stop lamps on all adult ATVs. The lighting equipment must conform to applicable referenced standards. This provision was adopted from the ANSI/SVIA–1–2001 standard. Nighttime riding can be expected with adult ATVs and requirements for industry standard headlamps will ensure minimum illumination for night-time or safer operation of the vehicle. [5 & 7]

VIN or PIN. The proposed standard requires that each ATV have assigned a unique vehicle identification number (''VIN'') in accordance with 49 CFR Part 565 or a product identification number (''PIN'') in accordance with Recreation Off-Road Vehicle Product Identification Numbering System, SAE International Consortium Standard, ICS–1000, issued 2004–9. If the ATV has a VIN number, the characters in location 4 and 5 of the number must be ''A'' and ''T'', respectively to identify the vehicle as an ATV and an off road vehicle. Having a VIN or PIN on every ATV can be helpful if an ATV is the subject of a corrective action. The VIN or PIN should also permit tracing the ATV back to its retailer to determine compliance with applicable requirements.

Maximum speed capability and brake requirements. Procedures are outlined for the measurement of a loaded vehicle's maximum speed. The maximum speed is used to determine the brake test speed and conformance to the youth ATV speed restriction requirements. [5]

The proposed standard establishes performance tests for service brakes and parking brakes. Reliable brake performance is critical to the safety of an ATV operator. The requirements specify a braking deceleration of 5.88m/s^2 (0.6g) or greater for service brakes and brake holding power up to a 30 percent grade for parking brakes. [5]

These proposed requirements establish minimum brake performance to ensure that brake systems are adequate for stopping the vehicle and holding the vehicle on an incline. The specified requirements are consistent with current ANSI/SVIA–1–2001 voluntary standard requirements which are patterned after those in the Federal Motor Vehicle Safety Standard No. 122 Motorcycle Brake Systems (49 CFR 571.122).

The proposed requirements deviate from the current ANSI/SVIA–1–2001 requirements in terms of the vehicle test weight used to perform service brake tests. The current voluntary standard specifies the test weight as the unloaded vehicle weight plus 91 kg (200 lb) if the vehicle load capacity is specified as 91 kg (200 lb) or more. The proposed requirements specify the test weight as the unloaded vehicle weight plus the vehicle load capacity. This will ensure that larger vehicles with larger load capacities do not have a less stringent brake requirement (by using a comparatively lower test weight during brake tests).

Stability requirements. The standard proposes the same pitch stability requirements as the ANSI/SVIA–1–2001 voluntary standard. The pitch stability for single-rider ATVs is based on the longitudinal tilt angle of a vehicle without an operator. A vehicle's longitudinal tilt angle can be calculated by measuring the vehicle's front and rear weights and balancing angle (angle at which vehicle is balanced on its rear wheels) or it can be measured on a tilt table. The ANSI/SVIA–1–2001 voluntary standard requires calculation of a vehicle's longitudinal pitch angle which must be 45 degrees or higher to meet the pitch stability requirement. The proposed requirements adopt this test procedure and minimum tilt angle for single-rider ATVs, and add a tilt table option to address larger ATVs whose weights could make it unsafe to follow the voluntary standard procedures for measuring and calculating the pitch stability.

The proposed pitch stability requirements deviate from ANSI/SVIA–1–2001 in terms of the test conditions of the vehicle. The current voluntary standard specifies that the vehicle tires be inflated to the ATV manufacturer's lowest recommended pressure. The proposed requirements specify that the tires be inflated to the ATV manufacturer's highest recommended pressure. This will ensure that the vehicle configuration with the highest expected center of gravity will be tested.

Over the years, the Commission has analyzed the issue of ATV stability. Because ATVs are rider-active vehicles (that is, their performance is affected by the rider's movements), it is difficult to evaluate an ATV's actual stability. A satisfactory static test has been developed to measure an ATV's pitch stability (movement from front to back). At this point in time, the industry has not been able to develop a satisfactory test of lateral stability (movement from side to side). Thus, the ANSI/SVIA–1–2001 standard has a requirement for pitch stability, but not for lateral stability. The Commission's proposed standard likewise contains requirements only for pitch stability. However, the Commission encourages the industry to continue to pursue an accurate and reliable test for lateral stability.

c. Information/Point of Sale Requirements

The proposed standard mandates by rule many similar information/point of sale requirements as were specified in the Consent Decrees and subsequently continued in the LOUs. This subpart of the proposed standard contains requirements for labeling, hangtags, age acknowledgment forms, instructional/owner's manuals, a safety video, and instructional training.

Warning labels. The Consent Decrees specified four labels to appear on all ATVs: (1) a general warning label, (2) an age recommendation label, (3) a passenger warning label, and (4) a tire pressure and overloading warning label. Most ATVs include these or substantially equivalent labels as well as other discretionary warning labels. However, imported ATVs may not have all of these warning labels, the labels may be unclear or they may not be in English.

The proposed rule requires labels that are similar to those required by the Consent Decrees, but allows more flexibility. The warning labels have evolved since the Consent Decrees, and the major distributors currently use their own copyrighted labels that present substantially the same warnings. In the case of the general warning label and the passenger label, the distributors sought Commission approval for new labels that included pictograms and somewhat different wording than had been specified in the Consent Decrees.

Like the Consent Decrees, the proposed rule requires a general warning label, an age recommendation warning label, a passenger warning label and a tire pressure/overloading label (or labels). All of the warning labels must display the safety alert symbol in accordance with section 4.1 of ANSI Z535.4–2002, American National Standard for Product Safety Signs and Labels, and the word ''WARNING'' in capital letters. The format for all of the labels must be consistent with the ANSI Z535.4–2002 standard. The proposed rule requires the same location for the single-rider ATVs as was required by the Consent Decrees. The proposed rule

requires the warning labels to be in English.

The proposed rule specifies statements for these warning labels and requires that the warning labels provide these, or substantially equivalent, statements. This should enable provision of the vital safety information but allow some flexibility to manufacturers who are using labels that are consistent with, but not identical to, the Consent Decree labels.

General warning label. The proposed rule requires a general warning label that contains the same statements, or substantially equivalent ones, as the general warning label required by the Consent Decrees. This label warns that ATVs can be hazardous to operate and that severe injury or death can result if the operator does not follow instructions to: Read the owners manual and all labels; never operate the ATV without proper instruction; never carry a passenger; never operate the ATV on paved surfaces or on public roads; always wear a helmet and protective clothing; never consume alcohol or drugs before or while operating ATVs; never operate the ATV at excessive speeds; and never attempt wheelies, jumps or other stunts. The proposed rule states that the warning statements may be arranged on the label to group the prohibited actions together and the required actions together. This is how many of the current general warning labels are arranged. The location is to be the same as specified in the Consent Decrees.

Age recommendation warning labels. The content of the age recommendation warning labels differs from the Consent Decree labels. The Commission's Human Factors staff concluded that the Consent Decree age labels for adult ATVs are vague about the nature of the hazard they are warning against and may not be as persuasive as they could be. The primary reasons for the age recommendations are children's lack of experience and, particularly, their immature judgment. If the reasons for the age recommendations are not explicitly described in the label, parents may rationalize why their children are exceptions to the recommendations. Thus, the proposed rule requires the following, or substantially similar statement: ''Even youth with ATV experience have immature judgment and should never drive an adult ATV.'' The proposed age recommendation label also differs from the Consent Decree label by directing the message to the supervising parents rather than to the child, who is likely to ignore it. Thus, the proposed rule requires the following, or substantially equivalent, statement: ''Letting children under the age of 16 operate this ATV increases their risk of severe injury or death. NEVER let children under age 16 operate this ATV.'' [10]

Passenger warning label. The proposed rule specifies different wording for the passenger warning label than the Consent Decrees required. The major distributors are currently using a passenger label that differs from the Consent Decrees. As with the general warning label, they asked for and received approval from the Commission for a different passenger label. Both the current label and the Consent Decree label identify that the hazard caused by a passenger is that the ATV may go out of control, but the labels do not state how the presence of a passenger can lead to loss of control. To address this, the proposed standard requires the following, or substantially similar, statement: ''Passengers can affect ATV balance and steering. The resulting loss of control can cause SEVERE INJURY or DEATH.'' The proposed standard also requires the statement (or a substantially similar one): ''NEVER ride on this ATV as a passenger.'' The proposed language inserts the phrase ''on this ATV'' because, with the development of tandem ATVs, some ATVs are intended to carry passengers. [10]

Tire pressure and overloading label(s). Like the Consent Decrees, the proposed standard allows the option of having the tire pressure warning and the overloading warning in separate warning labels or combined into one label. The proposed content of the label(s) is the same as specified in the Consent Decrees.

Label durability. The proposed rule requires that all of the warning labels must meet the durability requirements of Underwriters Laboratories Standard UL 969, fourth edition, October 3, 1995. This should ensure that the labels will remain on the ATVs and legible for operators to see.

Discretionary warning labels. The proposed standard allows manufacturers to display additional warning labels on ATVs so long as they are consistent with ANSI Z535.4–2002, American National Standard for Product Safety Signs and Labels ANSI Z535.4 (2002) and are affixed to the ATV in an appropriate location that does not detract from the required warning labels. [10]

Hangtags. Like the Consent Decrees, the proposed standard requires that certain hangtags be present on the ATV at the point of sale. The hangtags must provide the contents of the general warning label, a statement that the hangtag is not to be removed before sale, and a statement directing the purchaser to check with the ATV dealer about state or local laws concerning ATVs. The hangtags must be conspicuous and must be at least 4 by 6 inches.

Age acknowledgement form. The proposed rule requires that before the sales transaction, the ATV retailer must provide the purchaser with an age acknowledgement form, the content of which is specified in the proposed rule. The form tells the purchaser that the ATV he/she is considering is for adults and that children have immature judgment and should never drive an adult ATV. The form states the number of children who have died and who have been injured on adult ATVS in each year since 2001 and informs the purchaser that youth ATVs are available. The retailer must require the purchaser to sign the acknowledgement form before the sales transaction; must provide the purchaser and manufacturer with a copy of the form; and must maintain the original for at least five years. The signed forms must be available for Commission inspection upon request.

The purpose of the age acknowledgment form is to ensure that everyone who purchases an adult ATV is aware that it is not intended to be ridden by anyone under 16 and that children can be severely injured or die when riding an adult ATV. The Commission has received comments from parents indicating that they were unaware of the hazard adult ATVs pose for children until their child became injured or killed while riding one. Even with the current warning labels on ATVs stating this hazard and with the LOU provisions that voluntarily continue the major distributors' agreement to follow the age guidelines of the Consent Decrees, apparently some consumers purchase adult ATVs without knowing that a child should not ride them. Requiring purchasers to sign a form which states the age recommendations will inform the purchaser of the risks to children riding adult ATVs and could influence them to prohibit children under 16 from riding one. [8 & 11]

Instructional/owners manuals. Like the Consent Decrees, the proposed rule requires that ATVs be provided with an instructional/owners manual. The proposed rule continues many of the Consent Decrees' requirements for the manuals. They must be written to convey information about the safe operation and maintenance of the ATV, be written plainly in language that is comprehensible to a 7th grader, and be consistent with other required safety messages. The basic content of the

manual is specified much as it was in the Consent Decrees. The proposed rule adds a requirement that the manuals be in English.

An introductory safety section must contain certain specified safety messages. This section concludes with CPSC's website and phone number, and the manufacturer must provide a contact number for the purchaser to obtain further ATV safety information. The manufacturer also must provide a phone number or email address for the owner to report any safety issues (this could be the same phone number). The section of the manual that describes proper operating procedures must include narrative text identifying potential hazards, possible consequences, and describing how to avoid or reduce the risk of those hazards. This text must also include relevant warning statements required by the standard. The manufacturer must retain a copy of the manual for each model for 5 years and make it available for CPSC inspection upon request.

Safety Video. The proposed rule requires the retailer to provide the purchaser with a safety video before the sales transaction is completed. The requirements for the safety video are substantially the same as those set out in the Consent Decrees. The video is to include the contents of the hang tag, the concept of knowing one's limitations when operating an ATV, the importance of gradually progressing from basic to more complex maneuvers, and the importance of remaining alert while operating the ATV. The video also must include ATV-related death and injury statistics, both for all riders and for children under the age of 16, which can be stated in rolling five-year averages. These must be updated when there is a statistically significant change in the statistics. The video must be made available to the purchaser in at least one commonly used format, such as VHS or DVD. The manufacturer must retain a copy of the video for 5 years and make it available for CPSC inspection upon request.

The Commission believes that providing the safety video is an extension of the safety messages specified in the warning labels and the instructional/owners manual. The video provides safety information through a readily accessible medium. It can impart more detailed safety information than a warning label can. A purchaser might be more inclined to watch a safety video shortly after purchasing an ATV than he/she would be to read the entire owner's manual with all of its safety information.

Instructional Training. The proposed rule requires ATV manufacturers to provide to purchasers a training course (at no cost) for the purchaser and each member of the purchaser's immediate family who meets the minimum age recommendation for the ATV that is being purchased. At the time of sale, the retailer must deliver to the purchaser a certificate which is valid for attendance at a training course that meets the requirements in the proposed rule. The retailer also must have the purchaser sign a form indicating that ATVs are complex vehicles to drive and that he/she is aware that free training is available. The retailer must retain the original of the training disclosure form and provide the purchaser and the manufacturer each with a copy.

As discussed above, the Commission believes that training can play an important role in reducing ATV-related deaths and injuries. The curriculum specified in the proposed rule is similar to training that is currently offered by SVIA. It includes instruction on the maneuvers necessary for operation of the ATV and information about behaviors to avoid in order to reduce the rider's risk of injury. The course must include classroom, field and trail activities. The course content must include information on ATV-related deaths and injuries; the role of safety equipment; rider responsibilities and safety messages; identifying displays and controls on the ATV itself; recognizing one's limitations while driving; evaluating a variety of situations to predict a proper course of action, including terrain obstacles and behavior of other riders; demonstrating successful learning of riding skills, including starting, stopping, and negotiating turns of all types; stopping in a turn; emergency braking; negotiating full-track and partial-track obstacles; driving up hills; and combining skills together in a non-predictable manner. No course duration is specified, but it must be sufficient to cover all of the topics outlined in the proposed rule and to allow for students to individually master the riding skills covered in the course and to allow for written and riding skills tests.[12]

Although no specific time or location is stated, the course must be provided within a reasonable time from the date of purchase of the ATV and a reasonable distance from the place the ATV is purchased.

Recordkeeping, testing and certification. The proposed rule requires manufacturers to provide near the VIN or PIN number a statement certifying that the ATV meets the requirements of the standard. The manufacturer must perform, or cause to be performed, tests sufficient to demonstrate on an objectively reasonable basis that each ATV produced by the manufacturer meets the mechanical operation requirements of the proposed rule (sections 1410.5 through 1410.9). (This requirement is not intended to mandate testing of every ATV of a particular model.)

The proposed rule requires ATV manufacturers (including importers) to keep records sufficient to show that each ATV the manufacturer produces meets the requirements of the proposed standard. The records must be in English and must be kept at a U.S. location for five years after the manufacturer ceases production of that model. Retailers must keep records of the age recommendations acknowledgment form and the training acknowledgment form for five years after the purchase.

3. Requirements for Tandem ATVs

a. Background

Tandem ATVs are a relatively recent development. The Consent Decrees did not contemplate ATVs designed for more than one rider. The ANSI/SVIA–1–2001 standard does not cover tandem ATVs. However, in 2002 the International 2-Up ATV Manufacturers Association (I2AMA) began working on a voluntary standard for tandems, which subsequently became a draft ANSI voluntary standard, ANSI/I2AMA–1–XXXX, Draft American National Standard for Four Wheel, Two Person, All-Terrain Vehicles Equipment, Configuration, Performance, Safety Information and Training Requirements. Recently, I2AMA agreed to suspend its development of a tandem standard and will instead work with SVIA to include tandem ATVs in the existing ANSI/SVIA standard. [5]

The Commission covers tandem ATVs in its proposed standard for adult ATVs. Most of the requirements for single rider ATVs also apply to tandems. A few provisions in the equipment and configuration requirements and the information requirements are different in order to make them appropriate for tandems. The certification, testing and recordkeeping requirements specified above also apply to tandem ATVs.

b. Equipment and Configuration Requirements

Most of the proposed equipment and configuration requirements for single rider ATVs also apply to tandem ATVs. The proposed standard for tandems states requirements for the passenger environment, and modifies the single

rider requirements for the operator and passenger foot environment to suit tandem ATVs. The proposed tandem standard also adds requirements for passenger handholds. Two headlights and two tail lights are required for tandem ATVs that are wider than 1500 mm. These proposed requirements are based on the draft voluntary standard for tandem ATVs and additional information provided by letter from the SVIA of May 19, 2006. [5]

The proposed pitch stability requirements are different for tandem ATVs than for single rider ATVs. The pitch stability for single rider ATVs is based on the longitudinal tilt angle of a vehicle without an operator. However, the pitch stability for tandem ATVs is based on the tilt angle of a vehicle with an operator and passenger (simulated loads). The proposed requirements for tandem ATVs adopt the tilt table method and minimum tilt angle specified in the ANSI draft standard for tandem ATVs. A tandem ATV with simulated operator and passenger weights must reach a minimum of 36 degrees in the longitudinal direction on a tilt table before lift-off of both uppermost tires occur. Lift-off of a tire occurs when a strip of 20-gauge steel can be pulled from underneath the tire with a force of 9 N (2 lbf) or less. [5]

c. Information Requirements

Most of the information requirements discussed above for single rider ATVs also apply to tandem ATVs. However, there are a few differences. The general warning label proposed for tandem ATVs omits the warning about carrying a passenger. The passenger warning label is completely different from the passenger warning label of single rider ATVs. It states ''Never carry more than 1 passenger,'' and states the following recommended hazard avoidance behaviors: ''Never carry a passenger too small to firmly plant his/her feet on the footrests and to securely grab the handles; never allow a passenger to sit in a location other than the passenger seat; and never carry a passenger who is not securely grasping the grip handles at all times.'' [10]

The location required for the passenger warning label for tandem ATVs is also different from the location required for the single rider ATV. Because the general warning label required by the proposed standard no longer has any warnings about passengers, the passenger warning label should have greater visibility. Therefore, the proposed rule requires it to be affixed to the front fender of the tandem adjacent to the general warning label, so that it can be easily read by the operator when seated on the ATV in the proper operating position. [10]

The hangtag must provide the contents of the general warning label required for tandems rather than the one required for single rider ATVs. The instructional/owners manual also must have a different statement about passengers. It must state the following (or substantially equivalent): ''NEVER CARRY MORE THAN ONE PASSENGER. This ATV has been designed specifically to carry one passenger.'' [10]

4. Requirements for Youth ATVs

a. General

As discussed in section E above, the Commission is proposing three categories of youth ATVs based on maximum speed. Many of the proposed requirements for youth ATVs are similar to those for adult ATVs and the ANSI/SVIA–1–2001 voluntary standard. Because the FHSA, which provides authority for the proposed youth standard, allows design standards, some of the provisions of the proposed youth standard are phrased more closely to the ANSI/SVIA–1–2001 standard than the comparable adult standard provisions.

A youth ATV is defined as an ATV that is intended for use by an operator less than 16 years of age. A Junior ATV is a youth ATV intended for use by an operator at least 6 years old. A Pre-teen ATV is a youth ATV intended for use by an operator at least 9 years old. And a Teen ATV is a youth ATV intended for use by an operator at least 12 years old.

b. Equipment and Configuration Requirements

With the exception of lighting, maximum speed capability, and the requirement for automatic transmission, the proposed equipment and configuration requirements for youth ATVs are essentially the same as those for adult single rider ATVs, which are expressed as performance requirements.

Lighting. The proposed youth standard requires all youth ATVs to have at least one stop lamp, and it prohibits any headlamp or forward-facing day-time running lights. The ANSI/SVIA–1–2001 standard prohibits both headlamps and tail lamps and is silent about running lights. [7]

The Commission believes that youth ATVs should have stop lamps to alert a follower to the deceleration of a lead vehicle. The Commission believes it is also appropriate to allow (but not require) tail lamps for youth ATVs. Both of these types of lights could increase the ability of other ATVs to see a youth ATV, but they would not improve the ability of the youth ATV rider to operate the ATV at night. It is the concern that children may be encouraged to ride ATVs at night that is the basis for the proposed rule's prohibition of headlamps and forward-facing daytime running lights. Although the purpose of daytime running lights is to make the vehicle more conspicuous to other drivers rather than to illuminate the driver's path, the Commission is concerned that parents and children may have difficulty distinguishing between a daytime running light and a headlamp. This may encourage a child to ride at night. Thus, the proposed standard for youth ATVs allows daytime running lights only if they are not forward facing. This should increase the conspicuity of the ATV without providing forward illumination that could encourage night riding. [7]

Maximum speed capability. As discussed above, the proposed rule establishes maximum speeds for three categories of youth ATVs. Junior ATVs, which are intended for children age 6 and older, must have a maximum speed capability of 10 mph. Pre-teen ATVs, which are intended for children age 9 and older, must have a maximum speed capability of 15 mph. And Teen ATVs, intended for children age 12 and older, must have a maximum speed of 30 mph. In addition to placing limits on the maximum speed capability of the ATV, the proposed youth standard also requires speed limiting devices for Pre-teen and Teen ATVs. The maximum speed allowed for a Pre-teen ATV with a speed limiting device is 10 mph and the maximum restricted speed allowed for a Teen ATV is 15 mph. The youth ATVs requiring speed limiting devices must be delivered to the purchaser with the speed limiting device adjusted to limit the maximum speed to the lowest setting specified for each category of youth ATV. The proposed rule requires the simultaneous use of two different tools for the speed limiting devices to be adjusted or removed. This requirement is to make the devices more difficult to remove and thus discourage children from removing them without the participation of an adult. [5&6]

Although the proposed rule creates three categories of youth ATVs instead of the current two categories, the proposal retains the current maximum unrestricted speed of 30 mph for youth ATVs. The combination of defining youth ATVs only by their maximum speed capability (rather than engine size) while retaining the maximum speed currently in place should allow manufacturers to develop ATVs with larger frames and somewhat more powerful engines while still

maintaining the safety of the current speed limitations. Consequently, provided a manufacturer is committed to the speed limitations of this proposed youth ATV standard, the Commission would not oppose a modification to a LOU to delete the engine size limitation.

Automatic transmission. As discussed above, the proposed rule requires that all youth ATVs have automatic transmissions. The operation of an ATV is complex for a child even without the added activity of changing gears.

c. Information Requirements

The requirements for labels, hangtags, instructional/owners manuals, safety video, and training in the proposed youth ATV standard are essentially the same as those in the proposed adult standard. However, there are some differences in wording where appropriate.

Labels. As with the warning labels for adult ATVs, the format for all required warning labels for youth ATVs must be consistent with the ANSI Z535.4–2002 standard. The required location for all of the youth warning labels is the same as required for adult single rider ATVs. The contents of the general warning label, the passenger warning label, and the tire pressure and overloading label(s) are the same as required for adult single rider ATVs. The contents of the age recommendation labels differ slightly for each category of youth ATV. The age recommendation label for the Junior ATV must display the safety alert symbol and the word ''WARNING'' in capital letters. It must also contain a circle with a slash through it and within the circle the words ''UNDER 6.'' The proposed rule requires that below the circle must be the following, or substantially equivalent, statements: ''Operation of this ATV by children under the age of 6 increases the risk of severe injury or death. Adult supervision required for children under 16. Never let children under 6 operate this ATV.'' The age recommendation labels for the Pre-teen and Teen ATVS are similar, but the ages 9 and 12, respectively, are inserted instead of the age 6. [10]

Hangtags. The proposed rule requirements for hangtags are similar to those in the proposed adult single rider standard. However, in addition to the statements required there, the youth ATV hangtag must also state: ''Even though a child is of the recommended age to operate a particular size ATV, not all children have the strength, skills, or judgment needed to operate an ATV safely, and parents should, therefore, supervise their child's operation of the ATV at all times.'' [10]

Age acknowledgment. The proposed youth ATV standard also requires the retailer to get the purchaser's signature on an age acknowledgment form before the sales transaction. However, the required acknowledgment form is different from the adult standard. The form states the age categories and corresponding speed range. It advises the purchaser to buy an ATV that fits his/her child or teen, to use the speed limiter while the child is developing skills on the ATV, and to always supervise his/her child or teen. [6]

Instructional/owners manuals. The proposed youth standard's requirements for owners manuals are essentially the same as the requirements for adult single rider ATVs. However, statements concerning children's use of ATVs have been modified or added. The manual must contain an introductory notice to parents emphasizing that ATVs are not toys and that it is important for children to understand the manual's instructions and warnings. The introductory section must contain the following statement: ''Children differ in skills, physical abilities, and judgment. Some children may not be able to operate an ATV safely. Parents should supervise their children's use of the ATV at all times.'' [10]

Safety video and training. Requirements concerning the safety video and training are the same in the proposed youth standard as in the proposed adult ATV standard.

5. Ban of Three-Wheeled ATVs

The Consent Decrees prohibited the ATV distributors who signed the Consent Decrees from distributing or selling three-wheeled ATVs. In the LOUs, the major distributors agreed to continue to refrain from selling three-wheeled ATVs. None of them currently sell them (although three-wheeled ATVs that pre-date the Consent Decrees are still in use and could continue to be used if a ban is finally adopted). However, newer entrants to the ATV market have not made such agreements with the Commission.

The Commission's Office of Compliance has found that three-wheeled vehicles are being advertised and marketed as ATVs for sale in the United States. Compliance staff has identified three importers who have sold a recreational vehicle that is essentially a cross between a traditional ATV and a dirt bike, and would meet the proposed rule's definition of an ATV. All three importers use the Internet as the retail location for this product. They refer to it as a three-wheeled ATV. The price ranges from $350.00 to $380.00, plus shipping. All three importers are selling this product with a 49cc engine displacement. [14]

In addition, two styles of an all terrain three-wheeled golf scooter are being sold on the Internet and at golf supply stores. Both of these styles would meet the proposed rule's definition of an ATV.

The presence of these three-wheeled vehicles on the market indicates that the current LOU provisions, which continue the stop sale provision in the Consent Decrees, are not sufficient to keep new three-wheeled ATVs from entering the market. As discussed earlier, the newer entrant importers have been increasing their proportion of the market for ATVs sold in the U.S. This could mean increasing availability of these types of three-wheeled ATVs. [4]

Analysis of Commission data indicates that the risk of injury associated with three-wheeled ATVs is substantially higher than with four-wheeled ATVs. A recent risk analysis, based on injuries reported through the CPSC's National Electronic Injury Surveillance System (''NEISS'') and a parallel survey of the general population of ATV drivers, found that the risk of a hospital emergency department treated injury on a three-wheeled ATV was about 3.1 (95% confidence interval, 1.5 times to 6.4 times) times the risk on a similar four-wheeled ATV. As explained in the Preliminary Regulatory Analysis, the staff estimates the expected difference in non-fatal injury costs between three- and four-wheeled ATVs to be about $3,045 per ATV annually. This means that over the expected 9 year life of an ATV, the present value of the injury cost difference would be about $23,700. Even a lower bound estimate for the injury cost differential comes to a difference of $6,839 over the life of the product. The injury cost difference would be offset somewhat by the lower retail costs of a three-wheeled ATV compared to a four-wheeled ATV. Accounting for this, the total costs associated with three-wheeled ATVs (including both the injury costs and the costs of purchasing the ATV) might amount to about $23,400 ($23,700 in injury costs less $300 in retail costs) more than the costs of a similar four-wheeled ATV (over its useful product life). At the lower bound level, the difference would amount to about $6,530. [8]

Although the Commission cannot quantitatively estimate the utility of a three-wheeled ATV, available evidence suggests that the utility differential between a three-wheeled ATV and a four-wheeled ATV, for most people, is minimal. In the 1980s, before the Consent Decrees, four-wheeled ATVs

were steadily increasing their market share, so that by 1986, 80% of ATVs sold were four-wheeled models. Moreover, after the manufacturers agreed to stop selling three-wheeled ATVs pursuant to the Consent Decrees, the market price of used three-wheeled ATVs declined relative to four-wheeled models. This indicates that most consumers did not value three-wheeled ATVs significantly more than four-wheeled ATVs. [8]

At this point, it seems unlikely that any feasible standard could be developed for three-wheeled ATVs. As the Engineering staff notes, three-wheeled ATVs are less stable than four-wheeled ATVs and require far more active rider input to steer properly. Although many technical factors make a four-wheeled ATV more dynamically stable than a three-wheeled ATV, one of the largest factors is the fourth wheel. Given the inherent difference in vehicle configuration, the Commission does not believe that it is feasible to develop a performance standard for three-wheeled ATVs that would improve their stability performance to the level of a four-wheeled ATV. [5]

H. Response to Comments on the ANPR

As discussed above, the Commission published an ANPR in the **Federal Register** on October 14, 2005, 70 FR 60031. The Commission received 165 comments; one of those comments was a form letter, copies of which were submitted by about 1,500 consumers. Among those who sent comments to the Commission were ATV Safety Institute instructors; a state senator; ATV riders; parents and relatives of riders; parents, relatives, and friends of fatality and injury victims; consumers; medical professionals; consumer organizations; ATV industry associations; employees of the ATV industry; the Centers for Disease Control and Prevention; and students at a U.S. university.

The issues that were raised most frequently concerned the importance of training and safety education; state and local laws and enforcement; the use of protective gear; age/size guidelines, the proper fit of a child on an ATV and a transitional vehicle; the need to provide ATV purchasers with ATV-related death and injury statistics; ATV design; and parental rights and responsibilities. Other comments provided ATV-related injury and fatality statistics for specific states, regions, and hospitals. Some comments stated a position on the petition that was submitted in 2002 by the CFA and eight other groups. Another issue raised in a handful of comments was the non-recreational use of ATVs and the marketing of ATVs for that purpose.

Each of these issues, with the Commission's response, is summarized below. Many of the issues raised in the comments are discussed in more detail in the staff's input memoranda listed at the end of this notice.

Training

Comment. Many comments expressed the importance of training for safe ATV driving. Some comments spoke about training in general being important, while a few others suggested that training should be mandated, that training should be required before purchase of an ATV, or that training should be free of charge to all ATV riders.

Response. CPSC agrees that formal hands-on training teaches drivers how the ATV responds in situations that are typically encountered. CPSC believes that ATV training is important because, as mentioned in the memo ''ATV Training'' from the Division of Human Factors, operating an ATV seems deceptively easy; steering controls are similar to a bicycle's, and the throttle is generally lever-operated with the thumb. ATVs, however, are high-speed motorized vehicles that require repeated practice to drive proficiently. In addition, riding an ATV is ''rider-active,'' that is, the rider must actively shift his or her body to maintain proper control of the vehicle. It takes repeated practice to become a proficient driver. Formal training may act as a surrogate for experience because it exposes new ATV drivers to situations they will encounter while riding off-road and teaches them the proper driving behavior to navigate those situations.

As discussed above, to address the issue of training, CPSC is proposing that retailers of ATVs provide to every purchaser of an ATV a training certificate that would offer free hands-on training to members of the purchaser's immediate family. The course would include classroom, field, and trail activities, and a means for the student to demonstrate skills.

State and Local Laws and Enforcement

Comment. Many comments reflected on the role of states and localities in addressing the risks associated with ATVs. Some commenters expressed the need to enact state legislation, while others expressed the need for the states to clarify and enforce the laws that already are in place. Some commenters called for ATV licensing, just as automobile drivers have driver's licenses. Others suggested fines for riding on public roads, as well as sales taxes or city taxes on ATVs. Some commenters felt that more laws are not the answer because they still will not cause irresponsible drivers to drive safely. One commenter suggested that state laws should set minimum age limits for ATV riders and require licensing, registration, training, safety equipment, and prohibit passengers, while another commenter suggested that Congressional action should be taken to provide financial incentives for states to adopt safer ATV laws. Other commenters asked that CPSC join the ATV companies and other interested parties in actively supporting enactment of comprehensive ATV safety legislation in states where it is under consideration. A state senator from Minnesota expressed opposition to any federal regulation that ''removes the state as the primary regulatory mechanism'' for ATVs. Other commenters wrote about having graduated licensing of ATV drivers as some states have for automobiles.

Response. CPSC believes that states and localities have a critical role to play in any strategy to address the risk of injury and death associated with ATVs. Legislative activity, or interest in such activity, has been on the increase in the states. As noted in the staff's briefing memorandum, the staff suggests that the Commission establish an online state data resource bank for use by those who might want to pursue legislation or other ATV safety-related actions.

Helmets and the Use of Protective Gear

Comment. Some commenters noted that the use of helmets and protective gear is important in reducing deaths and injuries. One commenter cited CPSC staff research that suggests that between 42 and 64 percent of fatalities and hospitalized injuries involving the head ''could have been averted by helmet use in cases where a helmet was not being worn.'' Others mentioned that ATV riders and parents of riders need to know the importance of helmet use, while another commenter suggested that the helmet should be ''required to be thrown in as part of the package.''

Response. CPSC has always emphasized the importance of using helmets and other protective safety gear. As noted in the briefing package, CPSC staff encourages retailers to co-merchandise ATV safety gear, particularly helmets, alongside ATVs. The importance of wearing helmets and safety gear is one of the messages in the proposed rule; the message would be required on the general warning label and in the owner's manual. Wearing suitable equipment also is included as

an element in the required training course.

Age/Size Guidelines, Proper Fit, and Transitional Vehicle

Comment. Many commenters addressed the current age/size guidelines and the importance of finding a ''right fit'' for a child who rides an ATV; they also supported or opposed a transitional vehicle. Commenters noted the difficulty of children being able to get training when they were on an adult ATV; others said that the current CPSC guidelines matching engine size to age are too narrow in focus. One commenter suggested focusing less on the age of the rider and more on size, weight, and experience. Another commenter pointed out that the market now has some mid-sized ATVs and that they are safer for a child to ride than the smaller 90cc ATVs, while another suggested that children ages 12 to 15 years old should be able to ride up to a 250cc 4-stroke ATV. Other commenters pointed out that the age restriction actually leads to a safety problem because riding an undersized ATV is as much a safety concern as riding an oversized ATV. A few commenters mentioned that being able to adjust the throttle limits was a particularly useful feature as children grow physically and learn to ride.

With respect to a transitional vehicle, many commenters expressed opposition and stated that any proposal to put a child on an ATV larger than 90cc should be rejected, that this would be a step backward, and it would put children at an even greater risk of death and injury. Commenters who were in opposition to a transitional vehicle seemed to equate a transitional vehicle as one that was heavier, larger and faster.

Response. As discussed in section E of this notice and in the briefing memo, CPSC believes that speed, not engine size, is a more appropriate criterion for determining which ATVs should be recommended for children and youth under the age of 16. The proposed rule eliminates engine size as a category marker for distinguishing youth ATVs. In addition, all youth model ATVs will be required to have an automatic transmission, so that children can focus on mastering driving skills before learning to coordinate gear shifting with the many other skills involved in operating an ATV.

CPSC believes that limiting maximum speed is the most critical safety factor for youth ATV models. By eliminating the engine size restriction, manufacturers will be able to produce a variety of ATV models that meet speed restrictions but are more appropriately sized to account for the wide variation in physical dimensions of young people. By having the option of riding better-fitting ATVs that are not performance limited by undersized engines, CPSC believes that more youth will ride age-appropriate and speed-restricted ATVs rather than gravitating toward adult ATV models.

Disclosure of Death and Injury Data

Comment. Several comments expressed the belief that information about the risk of injury and death associated with riding ATVs, especially with regard to children riding adult ATVs, has not been available to prospective purchasers and that such information should be provided at the point of sale. One of these comments includes the 1,500 individuals who submitted the letters that are entered as comment 57.

Response. The proposed rule would require that ATV dealers provide purchasers of adult ATVs with a written statement that (1) clearly states that adult ATVs are not intended for use by children under the age of 16, and (2) gives consumers specific information about the possible injury consequences of allowing children to ride adult ATVs. The disclosure statement would be provided to purchasers prior to completion of the sale. Consumers would be required to sign the statement to acknowledge that they had been informed about the CPSC age guidelines for youth models and the risks associated with children riding adult ATVs. Similar disclosure forms would be provided to purchasers of youth ATVs; those forms would indicate the age of the child for which the youth model was designed.

ATV Design

Comment. Comments on ATV design ranged from the belief that deaths and injuries are operator error and not the result of the machine's design to some specific suggested design changes. One commenter said that manufacturers should not be required to significantly modify their designs for the sake of adding safety equipment, while a few others stated that ATVs should have a roll bar and safety belt. Other suggested design changes included: tags (license plates) on machines so they can be identified; make the ATVs two inches wider; provide a seat actuator which would turn the engine off if a passenger was on a single-person ATV; provide daytime running lights and headlights on ATVs. One commenter suggested that CPSC should determine the appropriate testing that needs to be done in order to assess dynamic stability, rollover propensity, and braking, suspension, and handling systems.

Response. CPSC staff notes in Tab G of the briefing package from the Directorate for Engineering Sciences that there are technical issues that would benefit from further testing and study. This work, however, will require time and the coordinated application of CPSC and private sector resources. CPSC believes that the most effective way to carry this out is through close, ongoing interaction with voluntary standards committees that are addressing ATVs in that regard.

With respect to lighting equipment, the proposed rule for adult ATVs would require at least one headlamp projecting a white light to the front of the ATV, at least one tail lamp projecting a red light to the rear and at least one stop lamp or combination tail/stop lamp. Daytime running lights would be allowed on adult ATVs.

All youth ATVs would be required to have at least one stop light. As discussed in section G.4.b above and in the briefing package, CPSC believes that riding ATVs at night is a significant risk factor for children and should be discouraged. Because headlamps or any forward-facing light on youth ATVs may encourage nighttime and unsupervised riding in challenging conditions, CPSC believes that these lights should not be allowed. Under the proposed rule, forward-facing daytime running lights for conspicuity would be prohibited on a youth ATV; but daytime running lights would be allowed on other parts of youth ATVs. A brake light would be required on youth ATVs.

Parental Rights and Responsibilities

Comment. Many comments focused on parental rights and responsibilities. For the most part, these comments expressed the belief that parents have the right and the responsibility to make decisions for their children and are the best judges of their children's abilities and skill levels. Other comments stated that some parents have neglected supervising their children and that the rights of many should not be taken away because of the actions of a few.

Response. CPSC agrees that parents must play a critical role in supervising their children's use of ATVs. This includes decisions about the size of ATV their child /children should use and their child's riding behavior. As mentioned above, the proposed rule requires that information be provided to help parents in their decision-making. The mandatory labels for youth ATVs provide a notice to parents that children

should ride only age-appropriate ATVs, while the hangtags and the owner's manual are required to include messages about the importance of supervision.

Injury and Fatality Statistics

Comment. Some comments included death and/or injury statistics for specific regions of the country, specific hospital emergency rooms, and specific states; some of the information was contained in articles that had been published in professional journals. A few commenters talked about the comparative risk of ATV riding and the risk associated with other activities. One commenter stated that overall ATV injury risk, as measured per vehicle in use (for all ages or for children) has been stable since the expiration of the Consent Decrees in 1998 and that ATV-related fatality risk (for all ages or for children) has declined or remained stable since 1999.

Response. With respect to the comment that overall ATV injury risk has been stable since the expiration of the Consent Decrees, the Directorate for Epidemiology notes that the 2004 Annual Report of ATV Deaths and Injuries compared the 2004 injury risk to the 2001 injury risk and concluded that there was no statistically significant trend in injury risk, positive or negative, from 2001 to 2004. However, the report noted that the statistical testing of differences in injury risk prior to 2001 is not possible due to the unavailability of measures of variation for risk estimates during those years.

With respect to fatality risk, CPSC staff notes that, because data collection was incomplete for the years 2002–2004 at the time of the most recent report, no conclusions could be made about fatality risk for those years. The commenter's assertion that fatality risk has declined or remained stable does not appear to be the result of a statistical test, since no measures of variation are provided in the commenter's report. CPSC staff has not performed statistical testing on risk of death for similar reasons.

As noted in section D of this notice and in the briefing memo, there were an estimated 136,100 emergency room-treated injuries for all ages in 2004. This was an increase of 10,600 from 2003. In 2003, there were an estimated 740 deaths associated with ATVs. Twenty-six percent of the reported deaths in 2001 were of children under 16 years old.

Ban the Sale of Adult-Size ATVs for the Use of Children Under 16 Years Old

Comment. Several comments were submitted that specifically expressed a position on the CFA petition to ban the sale of adult sized vehicles for use by children under 16 years old. This included the 1,500 form letters submitted as comment 57, which expressed the opinion (without mentioning the petition) that the sale or rental of adult-sized ATVs to anyone under 16 should be prohibited. A few letters expressed opposition to the petition.

Response. The petition to ban the sale of adult ATVs for the use of children under 16 years old was the focus of the staff's 2005 briefing package. The staff comments on the petition are contained in that document.

Non-Recreational Use of ATVs, ATV Marketing

Comment. A few commenters mentioned the non-recreational aspect of ATVs, the perceived need to limit their marketing to farm or utility use alone, and that the advertised recreational use of ATVs is not a practical or safe form of activity. Some of these commenters expressed concern about the injuries and deaths associated with the use of ATVs in farm or utility work.

Response. CPSC believes the issue of how ATVs are marketed as recreational or utility vehicles is better addressed by the Federal Trade Commission.

I. Preliminary Regulatory Analysis

The Commission is issuing a proposed rule under sections 7, 8 and 9 of the CPSA and section 2(q)(1)(A) of the FHSA. Both the CPSA and FHSA require that the Commission prepare a preliminary regulatory analysis for these proposed rules and that it be published with the final rule. 15 U.S.C. 2058(c) and id. 1262(h). The following discussion is extracted from the staff's memo, ''All Terrain Vehicle Mandatory Standard: Preliminary Regulatory Analysis.''

1. Introduction

The main provisions of the ATV proposed rules include (1) Mechanical requirements for ATVs,(2) a ban on the sale of new three-wheel ATVs, (3) speed limitations on ATVs intended for children under 16 years of age, (4) requirements for warnings and recommendations to be provided to purchasers of new ATVs through hang tags, labels, videos, and owner's manuals, (5) requirements for a disclosure statement to be provided to purchasers warning against the use of adult ATVs by children, (6) a requirement that all purchasers of new ATVs be offered free safety training, and (7) requirements that purchasers of new ATVs be provided with a means for reporting safety related complaints to the manufacturer and the CPSC.

Many of the provisions of the proposed rules are based on an existing voluntary standard (ANSI–SVIA–1–2001), provisions of the 1988 Consent Decrees, and the current LOUs with a number of manufacturers that may account for as much as 90 percent of the U.S. market for ATVs. Consequently, the Commission believes that most ATVs are already in substantial conformance with most of the provisions of the proposed rule. Some of the smaller manufacturers, and some of the recent entrants into the market may also be in conformance with some (or most) of the provisions of the proposed rule. Promulgating a mandatory rule will ensure that manufacturers that are already conforming continue to do so, and that any manufacturer that does not now conform can be brought into conformance.

Below is a preliminary regulatory analysis of the proposed rule, including a description of the potential costs and potential benefits. Each element of the proposed rule is discussed separately. For some elements, the benefits and costs cannot be quantified in monetary terms. Where this is the case, the potential costs and benefits are described and discussed conceptually.

2. Products Covered

An ATV is a motorized vehicle with 3 or 4 low-pressure tires (less than 10 pounds per square inch) that is intended for off-road use. The seat is designed to be straddled by the operator. Handlebars are used for steering control. Most ATVs are intended to carry only one person: the operator. More recently, some tandem ATVs have been introduced that are designed to carry a passenger in addition to the operator. ATVs can be used for purposes of recreation, sport or utility.

If promulgated in final, the proposed rule will apply to all ATVs sold in the United States on or after the effective date of the rule (180 days after publication of a final rule). It will not apply to ATVs that were sold prior to the effective date.

3. ATV Manufacturers, Numbers in Use, and Sales

The ATV market has grown substantially since Honda introduced the first ATV in 1969. The Specialty Vehicle Institute of America (SVIA) estimated that in 2005, there were 6.9

million ATVs in use. While most ATVs are used for recreational activities, ATVs can also be used for non-recreational activities, such as farm or ranch work or for transportation to remote work sites that are not accessible on paved roads.

The number of new ATVs sold annually has increased substantially in the last decade. In 1995, an estimated 293,000 ATVs were sold in the US, almost all by 7 North American distributors (Honda, Kawasaki, Yamaha, Suzuki, Polaris, Bombardier, and Arctic Cat). In 2005, an estimated 921,000 ATVs were sold in the US. An estimated 10 percent (or 92,000) were imported. The share of imports is expected to continue to increase in the future.

With the substantial increase in ATV sales has come a substantial increase in the number of manufacturers supplying ATVs to the U.S. market. In 1995, virtually all the ATVs were supplied by 7 domestic distributors; by 2006, the staff had identified at least 87 firms supplying ATVs to the U.S. market.

Generally, the largest manufacturers sell their ATVs through franchised dealers. Importers will typically import ATVs from a foreign manufacturer and then market them to various retailers. Some importers may sell directly to consumers. Some imported ATVs are sold directly to consumers through import brokers who never actually have physical possession of the ATV. ATVs are also offered for sale through the internet.

Most ATV retailers sell products in addition to ATVs. For example, many ATV dealers also sell motorcycles, scooters, personal water craft, and sometimes farm equipment. Some ATVs are sold by other types of retailers, such as aftermarket automotive parts and accessories dealers.

The median retail price of an ATV from the domestic manufacturers is about $5,150 (range $2,000 to $8,000). The median price for youth ATVs is about $2,300 (range $1,800 to $2,500). The retail prices of imports can be substantially lower.

4. Benefits and Costs of the Proposed Rule

Mechanical Requirements. The proposed rule incorporates a number of mechanical requirements from the current voluntary standard for ATVs (ANSI/SVIA–1–2001). The specific requirements and rationales are described and discussed in more detail above. They include, among other things, requirements for service and parking brakes, mechanical suspension, pitch stability, handlebars, and the operator foot environment. There are also some additional design requirements for youth models covering items such as the location of brake and throttle controls.

The proposed rule differs from ANSI/SVIA–1–2001 with regard to some lighting requirements. The proposed standard would require stop lamps on all ATVs, including youth models (i.e., those intended for children under the age of 16). ANSI/SVIA–1–2001 allows, but does not require stop lamps on adult and youth ATVs. Stop lamps can reduce the risk of a collision by visibly signaling to a following ATV that an ATV ahead of it is decelerating. CPSC believes that while most adult ATVs are already equipped with stop lamps, most youth ATVs do not currently have stop lamps.

The proposed rule would require that youth ATVs be equipped with automatic transmissions so that the operator does not have to either engage a clutch or select the proper gear in order for the engine to maintain its optimum speed. This is a change from the voluntary standard, which does not specify the type of transmission on youth ATVs.

Each provision of the mechanical requirements should reduce injury risks associated with ATVs. For example, the pitch stability requirement is intended to reduce the propensity of ATVs to tip rearward, which could injure the rider if he or she was thrown from the vehicle or the vehicle flipped and landed on the rider. The service and parking brake performance requirements are intended to ensure that brakes are at least adequate for stopping the vehicle and preventing the vehicle from rolling when it is left unattended. The requirement for automatic transmissions on youth ATVs could reduce injury risk by reducing the number of tasks that inexperienced drivers must perform while driving an ATV.

Mandating these mechanical requirements would help ensure compliance with these minimum mechanical safety requirements and enhance the CPSC's ability to enforce the mechanical safety requirements at a time when many new manufacturers are entering the market. Conformance to ANSI/SVIA–1–2001 is voluntary.

Mandating these mechanical requirements would have a small initial impact on injury risk. The ATV manufacturers that have negotiated LOUs with the CPSC are already in conformance with the requirements of the voluntary mechanical standard, from which the requirements in the proposed rule were adapted. Some of the smaller manufacturers are also believed to be in conformance with the voluntary standard. In total, the firms that are already in substantial conformance probably account for more than 90 percent of ATVs now sold. However, mandating these requirements would ensure that those firms that do not now meet these minimum safety requirements will begin to do so. Moreover, as new firms enter the market, the presence of a mandatory standard that can be more easily enforced would make it more likely that new entrants comply with the mechanical safety requirements. Mandating these requirements should also help ensure that the risk of ATV-related injury due to ATVs that do not meet the mechanical safety standards does not increase in the future.

Since many manufacturers already conform with the voluntary standard, the additional cost that will be incurred by manufacturers to meet the mechanical requirements of the proposal will be low. The cost to some may be limited to the cost of adding stop lamps to their youth ATVs. The cost of adding stop lamps to ATVs could amount to several dollars or more, especially on youth ATVs. Most adult ATVs are thought to already have stop lamps.

Additionally, some manufacturers will have to modify the transmissions on some youth ATV models so that they are fully automatic. Based on staff observations, most current youth ATV models are already equipped with automatic transmissions, especially those intended for children under the age of 12 years. The staff has identified some ATVs intended for children between 12 and 15 years of age that are equipped with automatic clutches, but not automatic transmissions. These ATVs would not meet the requirements of the proposed rule.

The fact that many youth ATVs are already equipped with automatic transmissions indicates that many consumers are willing to pay the additional cost of automatic transmissions for the additional safety, convenience, or driving ease that is provided by automatic transmissions. However, the Commission has not been able to quantify the difference in cost between automatic transmissions and manual transmissions or between automatic transmissions and automatic clutches/manual transmissions.

The mechanical requirements are not expected to cause a substantial loss of utility for the rider. In fact, to the extent that the requirements prevent accidents, reduce downtime, make the ride more comfortable (e.g., the suspension requirements), and increase the functionality of the vehicles, most of the

requirements could have a positive impact on rider utility.

The proposed rule would require manufacturers (including importers) to perform, or cause to be performed, testing sufficient to ensure, on an objectively reasonable basis, that each ATV conforms to the requirements in the proposed rule. The specified tests will require some time and equipment. If the tests are conducted at a facility where the required equipment is available and set up time for each test is kept to a minimum, it is possible that all of the tests could be conducted in one day (8 hours) or less. It is reasonable to assume that the person supervising the tests will be a senior mechanical engineer and that at least one other mechanical engineer will be involved in conducting the tests. If the total labor costs were $90 per hour, then the cost of conducting the tests would be about $720 per model (8 hours × $90).[6]

In addition to the labor cost, some accounting for the cost of equipment required for testing should also be made. Assuming that ATV manufacturers have the equipment easily available, it is probably reasonable to assume that the cost of the equipment used in the testing is perhaps about $500. This could be thought of as the rental value of the equipment for a day of testing.

The testing must be documented and maintained for 5 years after the production of that model ceases. The information required for this documentation would be collected during the performance of the tests. However, this information might be reformatted and assembled into the final record after the testing is completed. Moreover, in the case of foreign manufacturers, this documentation will have to be provided to the U.S. based importer and it is the importer that will be required to maintain the records. This could add perhaps another $100 to the cost of the testing and record keeping.

These estimates suggest that the full testing and recordkeeping costs of the proposed rule could be about $1,320 per model. Previously, CPSC staff had identified 131 different ATV models for the model year 2001 and 235 different ATV models for the year 2003. Given the significant increase in sales of ATVs in recent years, it is not unreasonable to believe that there might be 500 different ATV models today. Therefore, the full testing and recordkeeping costs could be $660,000 per year, assuming models are changed annually.

Several ATV manufacturers conform to ANSI/SVIA–1–2001 and, therefore, should already be performing the testing called for in the proposed rule. The proposed rule will not impose additional testing burdens on these manufacturers. The staff estimates that these manufacturers account for at least 150 ATV models. Therefore, the testing and recordkeeping costs that could be attributed to the proposed rule that would not be incurred in the absence of the proposed rule, could be less than $462,000 annually ($660,000 − 150 × $1,320).

Ban on the Sale of New 3-Wheel ATVs. As part of the 1988 Consent Decrees, ATV manufacturers agreed not to sell any new 3-wheel ATVs, which had been shown to be less stable and more risky than their 4-wheel counterparts. As a result, until recently, no new 3-wheel ATVs have been marketed in the United States since the late 1980s. However, the CPSC Office of Compliance has found evidence on the Internet that 3-wheel vehicles that could be considered to be ATVs have recently been offered for sale to the public. Therefore, the proposed rule would formalize a ban on the sale of new 3-wheel ATVs. While formalizing the ban will not reduce ATV-related injuries significantly from their present levels, it will ensure that 3-wheel ATVs are not reintroduced into the U.S. market.

The justification for a ban on the sale of 3-wheel ATVs is based on the substantially higher expected injury costs associated with the ownership and use of 3-wheelers, relative to 4-wheelers, and the likelihood that these higher costs outweigh any additional utility that they may provide to their owners. We begin with a discussion of the costs associated with the ownership and use of 3-wheel and 4-wheel ATVs.

The real costs of ATVs include the expected injury costs associated with their use as well as their purchase price. A recent risk analysis, based on injuries reported through the CPSC National Electronic Injury Surveillance System (NEISS) and a parallel survey of the general population of ATV drivers, found that the risk of a hospital emergency department-treated injury on a 3-wheel ATV was about 3.1 (95% confidence interval (CI), 1.5, 6.4) times the risk on a similar 4-wheel ATV.[7]

These relative risk estimates can be used to estimate the expected difference in annual injury costs between 3-wheel and 4-wheel ATVs. In 2001, the societal cost of non-fatal ATV-related injuries was about $1,876 per ATV in use. In 2001, 3-wheel ATVs made up about 14 percent of the ATVs in use. If we let $Cost_3$ and $Cost_4$ represent the expected annual non-fatal injury cost per 3-wheel and 4-wheel ATVs in use respectively, then the expected annual injury cost per ATV can be expressed as $0.14(Cost_3) + 0.86(Cost_4) = \$1,876$.

Since the risk of a non-fatal injury on 3-wheel ATVs is approximately 3.1 times that of a 4-wheel ATV, $Cost_3$ can be expressed in terms of $Cost_4$ (i.e., $Cost_3 = 3.1 * Cost_4$). Solving these equations yields $Cost_3 = \$4,494$ and $Cost_4 = \$1,450$. Therefore the expected difference in non-fatal injury costs between 3-wheel and 4-wheel ATVs is about $3,045 per vehicle annually.[8] If the expected life of an ATV is 9 years, the present value of this injury cost difference (at a 3 percent discount rate) over the expected life of the product will come to about $23,700.[9]

A lower bound estimate for the injury cost differential might be based on the lower 95 percent confidence bounds of the relative risk factors for 3-wheel ATVs described above, or 1.5 instead of 3.1. Based on these relative risk estimates, the non-fatal injury cost differential on a 3-wheel ATV would be about $877 per year. Assuming a 9-year useful life and a 3 percent discount rate, this comes to a difference of $6,830 over the life of an ATV.[10]

The injury cost differential would be offset somewhat by the lower retail costs of 3-wheel ATVs. Based on information from the late-1980s, when 3-wheel ATVs were still being produced, 3-wheeled ATVs cost about $190 less than a similar 4-wheel model. This cost

[6] According to the U.S. Department of Labor, Bureau of Labor Statistics, the average wage for a Level 13 Mechanical Engineer was $52.45 in July 2003. In this discussion $90 is used to allow for the assistance of a less experienced engineer and inflation.

[7] Gregory B. Rodgers and Prowpit Adler, ''Risk Factors for All-Terrain Vehicle Injuries: A National Case-Control Study,'' *American Journal of Epidemiology,* Vol. 153, No. 11 (2001). Hereafter Cited ''Rodgers and Adler (2001).''

[8] An analysis of fatal injury risks also suggested a higher relative risk on 3-wheel ATVs. However, because information regarding a key driver characteristic was missing, the difference in fatal injury risks was less amenable to quantification and, therefore, not included in the above analysis. It suggests however, that the cost differential between 3-wheel and 4-wheel ATVs estimated above could be low (see Gregory B. Rodgers, ''Revisiting All-Terrain Vehicle Risks: Response to Critique,'' *Journal of Regulatory Economics,* Vol. 10 (September 1996).

[9] This is a low estimate of the average life of an ATV. One analysis suggests that the expected life of an ATV could be 19 years (Statement of Ed Heiden of Heiden Associates at the Consumer Product Safety Commission West Virginia Public Field Hearing, Morgantown, West Virginia, 5 June 2003).

[10] Even if a higher discount rate were used, the cost differences would be substantial. For example, if a 7 percent discount were used with the lower estimates of the relative risks, the expected cost difference over the life of an ATV would be $5,713.

differential would probably amount to about $300 in 2004 dollars.

Thus, the total costs associated with 3-wheeled ATVs (including both the injury costs and the costs of purchasing the ATV) might amount to about $23,400 ($23,700 in injury costs less $300 in retail costs) more than the costs of a similar 4-wheel ATV (over its useful product life). At the lower bound level, the difference would amount to about $6,530.

A ban of 3-wheel ATVs would therefore be beneficial (on average) if the average extra valuation (i.e., use value or utility) that individuals put on a 3-wheel ATV over a 4-wheel ATV is less than $23,700 (or about $6,530 at the lower bound) over the useful life of the product. Consequently, if the utility from a 4-wheel ATV is not substantially different from the utility from a 3-wheel ATV, the ban would be justified.

We cannot estimate the utility that individuals get from ATVs, and so we cannot say that the ban would be justified for all individuals. However, available evidence suggests that for most individuals, the utility differential is minimal. First, 4-wheel ATVs were growing in market share throughout the 1980s, even though their retail prices were marginally higher than similar 3-wheel ATVs. By 1986, for example, two years before the consent decrees became effective, about 80 percent of ATVs sold in the U.S. had four wheels. Second, after the ATV manufacturers agreed to stop selling 3-wheel ATVs as part of the consent decrees, the market price of used 3-wheel ATVs actually declined relative to the price of 4-wheel models.[11] There was no evidence of a strong market reaction to the 3-wheel ATV stop-sale, such as bidding up the price of the increasingly scarce 3-wheelers that would suggest many consumers valued 3-wheel ATVs significantly more than they valued 4-wheel models.

Speed Limitations on ATVs Intended for Youths. The proposed rule would limit the maximum speeds of ATVs intended for children under the age of 16 years. Teen ATVs (i.e., those intended for riders between 12 and 15 years of age) would have a maximum unrestricted speed of 30 mph and a speed limiting device that can limit the maximum restricted speed to 15 mph. Pre-Teen ATVs (i.e., those intended for children between 9 and 11 years of age) would have a maximum unrestricted speed of 15 mph and a speed limiting device that can limit the maximum restricted speed to 10 mph. Junior ATVs (i.e., those intended for children between 6 and 8 years of age) would have a maximum speed of 10 mph. No ATVs would be recommended for children under the age of 6 years. All references to engine size, such as those in the LOUs, would be eliminated.

Based on an analysis by the CPSC Division of Human Factors (ESHF), speed—not engine size—is a more appropriate control variable for determining which ATVs should be recommended for children under age 16 years. In fact, limiting engine size could be counterproductive. There is some evidence that limiting the power of youth models by controlling engine size can, in some circumstances, make ATV riding less safe. As one example, underpowered children's models have a greater potential for stalling when going uphill.

It is also likely that engine size restrictions discourage some people from purchasing appropriate ATVs for young riders. If the ATV engine lacks sufficient power for things such as acceleration or hill climbing, some young riders may resist riding these ATVs and instead ride adult ATVs. Additionally, the frame size of the current ATVs with less than 90cc engines might not comfortably fit ''large'' children. Some adolescents between the ages of 12 and 14 are larger than some adults; these adolescents may resist using an ATV with a frame designed to fit a much smaller person. According to ESHF, ''fitting the [ATV] frame anthropometrically to the user is one of the most important factors for youth ATVs. If the frame is too small, the youth will be discouraged from riding the ATV both physically and socially.'' This may explain, at least in part, the fact that relatively few children actually ride the youth models. Based on the 2001 exposure survey, only about 20 percent of children under 16 years of age who drove ATVs drove youth models.

Based on these considerations, eliminating the engine size limitations from youth models may enhance safety. It might lead to some ATV manufacturers introducing a wider variety of youth models, including models with larger frames and more powerful engines. With larger frames and more power, it is possible that more young riders will be willing to accept ATVs with the recommended speed restrictions. It is also likely that more parents would be willing to purchase youth models with larger frames that could be used by children for a longer period of time without replacement. Moreover, increased acceptance of ATVs with the age-recommended speed restrictions could reduce the number of ATV-related injuries.[12]

Increasing the number of youth ATVs with larger frames could also increase safety by increasing the proportion of young ATV drivers that receive formal ATV safety training. Most formal ATV safety training programs, such as that run by the ATV Safety Institute, will not train children under the age of 16 unless they are riding an appropriate youth model. Therefore, children who do not have ATVs with less than 90cc engines cannot receive formal training. If simplifying the age recommendations for ATVs leads manufacturers to introduce more ATVs with the recommended speed restrictions for young riders and, as a result, more children begin riding youth ATVs, it will be possible for more young riders to receive formal safety training. As discussed more fully below, formal training can act as a surrogate for experience and thereby reduce the risk of injury.

The speed limitations for ATVs intended for youths should not impose substantial additional costs on manufacturers because they are similar to those already in the voluntary standard (ANSI/SVIA–1–2001). Moreover, the speed limitations in the proposed standard are less restrictive than the requirements for youth ATVs specified in the LOUs, since they do not include the engine size limitations. Consequently, the Commission believes that this provision of the proposed standard increases the potential for safety in the form of reduced injuries and deaths, without imposing additional costs and burdens on manufacturers.[13]

Warnings and Safety Information to be Provided to Consumers. According to ESHF, hazard communications ''are crucial for products with hazards that cannot be eliminated through design.'' The proposed rule requires ATV manufacturers, distributors, or dealers to provide several safety warnings to consumers. These will consist of labels or hang tags that, among other things, advise consumers of the age recommendations for ATVs, warn that it is unsafe to allow children to operate

[11] Gregory B. Rodgers, ''All-Terrain Vehicles: Market Reaction to Risk Information,'' *Economic Inquiry,* Vol. 31, No. 1 (January 1993).

[12] It should be noted that manufacturers are not now prohibited from producing youth ATVs on larger frames. However, increasing the options available to manufacturers in designing youth ATVs should increase the probability that manufacturers might manufacture youth ATVs in a wider range of sizes.

[13] ANSI/SVIA–1–2001 does not have an age category that corresponds to ''Junior ATV'' in the proposed rules. CPSC staff believe that the ''Junior ATV'' market will be a very small segment of the ATV market.

ATVs intended for adults or older children, and warn that it is unsafe to carry passengers on an ATV (with the exception of specially designed tandem ATVs). This information will also be required to be contained in the owner's manuals and in a video to be provided to each consumer.

The ATV manufacturers with the greatest share of the market are already conforming to this requirement, which is included in the LOUs negotiated with the major ATV manufacturers. Therefore, this provision will not impose any new costs on these manufacturers. For the manufacturers that are not now in conformance, the cost to bring themselves into conformance will be low on a per unit basis. The cost of designing, printing, and attaching a label or hang tag or adding pages in an owner's manual is low. Even for manufacturers with a very low sales volume, the cost of adding the required warnings will be probably no more than a few dollars per vehicle.

The major manufacturers are already providing the safety video and so the proposed standard will have no impact on their costs. For manufacturers that are not currently providing a safety video to their consumers the costs could be higher. The cost of duplicating a video or DVD is no more than a few dollars. However, the cost of producing the safety video could be several thousand dollars. For a manufacturer or distributor with a low sales volume, this could be a more significant cost. The cost or impact could be lower if a third party video could be licensed or shared by many small manufacturers or distributors.

Manufacturers would also be required to keep a copy of the owner's manuals and the safety video for each model on file for at least 5 years. It is likely that many manufacturers would do this even in the absence of a mandatory rule. The storage costs of these items probably would not exceed $10 per model. The cost could be lower since the same safety video would likely be used for all ATV models produced or imported by a manufacturer and could be used for several years. Owner's manuals also might cover more than one model.

The benefit of this provision is that it will ensure that all consumers receive some basic safety and hazard information regarding such things as the risk of children riding ATVs not appropriate for their age and carrying passengers on ATVs not designed for carrying passengers. Although this benefit cannot be quantified, the following example sheds some light on the potential impact. The risk of injury for riders under the age of 16 driving adult ATVs is about twice the risk of injury of those who are driving age-appropriate ATVs.[14] In 2001, the societal cost of ATV related injuries and fatalities involving children under the age of 16 was about $3.6 billion. Therefore, although it is not known how effective these warnings are at reducing children from riding adult ATVs, if they reduced the number of children riding adult ATVs enough to reduce the number of ATV-related injuries to children (either by parents not allowing a child to drive an adult ATV or by purchasing an appropriate ATV for young riders) by even a small amount, the benefits of these warnings could exceed the costs. For example, if they reduced the injuries by only one-half of one percent, this would still amount to a benefit of $25 over the life of an ATV.[15]

Disclosure Statement to Consumers About the Risks to Children Riding Adult ATVs. The proposed rule would require that ATV retailers provide purchasers of adult ATVs a written statement that (1) clearly states adult ATVs are not intended for the use of children under the age of 16 and (2) provides the consumer with specific information on the possible injury consequences of allowing children to ride adult ATVs. A similar disclosure statement would be provided purchasers of youth ATVs advising them to monitor their child's ATV driving to ensure that the child is capable of and does drive the ATV safely. This requirement is a direct response to the high risk of injury to children riding adult ATVs, and the comments of many parents (including some whose children died on adult ATVs) that they had never been warned of the risks. This disclosure would be provided to the purchaser and signed before the purchaser completes or signs other documents related to the sale, such as sales contracts or financing agreements. Consumers will be required to sign the statement to acknowledge that they were warned. Dealers would be required to keep the signed disclosure statement on file for at least 5 years after the purchase so that compliance with the requirement for the disclosure statement can be monitored. Dealers would also be required to send a copy of the signed disclosure statement to the manufacturer, who would also be required to keep the statement on file for at least 5 years after the purchase.

The benefits of the disclosure statement are twofold. First, it will help consumers make a more informed choice when they purchase a new ATV. Second, as suggested by the ESHF analysis, signing the document may discourage some purchasers from allowing children to ride their adult ATVs. As shown in the above discussion of ''Warnings,'' the injury costs associated with children riding adult ATVs are significantly higher than the injury costs associated with children riding age-appropriate ATVs. Even if the disclosure statement could reduce the number of injuries by one-half of one percent, it could still produce a benefit of $25 over the life of an ATV.

The cost of this disclosure statement is estimated to be approximately $0.95 per ATV sold.[16] Generally, when ATVs are sold there is already some amount of paperwork generated, including purchase contracts and financing agreements. Therefore, the marginal cost of an additional form is minimal. Moreover, under the LOUs manufacturers already require their dealers to inform consumers of the age recommendations for ATVs and to monitor dealer compliance with these recommendations. It is possible that the enforcement mechanism provided by this disclosure statement would be no more costly than the current methods of monitoring compliance with the LOUs.

Provision of Training for ATV Purchasers. The training requirement of the proposed rule would require manufacturers or distributors of ATVs to provide a training certificate to each purchaser of a new ATV that entitles the purchaser and any qualified member of his or her immediate family to attend an authorized training course, ''free'' of charge. Of course, the training will not be free in terms of the trainee's time. The trainee would have to devote a day to the training process, and may have to transport an ATV to the training site. In the case of children, parents would likely need to become involved by

[14] According to information provided by the CPSC Directorate for Epidemiology and included in the 2005 CPSC Briefing Package on ATVs (regarding Petition No. CP–02–4/HP–02–1, Request to Ban All-Terrain Vehicles Sold for Use by Children Under 16 Years Old), risk of injury to children under 16 driving adult ATVs was 18.6 per thousand drivers compared to 9.6 per thousand drivers for children driving youth ATVs.

[15] One-half of one percent of $3.6 billion divided by the 5.6 million ATVs of all types in use in 2001 is $3.21. Over the expected 9-year life of an ATV this comes to about $25 discounted at 3 percent per year.

[16] This estimate is based on it taking approximately 2 minutes to complete the form and distribute the copies to the purchaser, the manufacturer, and the retailer's files and that the time is valued at $21.32/hour, which is the average wage of motor vehicle sales workers in July 2004, as reported by the U.S. Department of Labor, Bureau of Labor Statistics, adjusted for inflation. Other costs, such as the cost of the blank forms and postage, may add another $0.24 to the cost.

providing transportation to the training site. Hence, the provision of the ''free'' certificate entitling the holder to training can be thought of as a subsidy to encourage new purchasers to take the training.

The cost of the training to be provided will depend upon a number of factors, such as the length of the course, the number of trainers, the number of enrollees, and others. However, if the training is similar to that currently provided by the ATV Safety Institute (ASI), the value of the training certificate entitling the holder to a training course might be $75 to $125. This is what ASI currently charges children and adults respectively for the course, as indicated at their Web site (www.atvsafety.org). Thus, the value of the training subsidy, under this requirement of the proposed standard, might be $75 to $125 per trainee.

The requirement that manufacturers offer free training is essentially a requirement that they subsidize ATV safety training. The purpose of a subsidy is to lower the cost of a product to a person to induce them to purchase more of the product. It can be an appropriate policy when it is believed that consumers will not purchase the socially optimal quantity of the good without some intervention. A consumer might not purchase the optimum quantity of a good for a variety of reasons, such as some of the societal benefit of purchasing the good (or undertaking an activity) might go to people other than the direct consumer or if the consumer underestimates the value of the good to himself or herself.

In the case of ATV safety training, it is likely that many consumers underestimate the benefits of training. According to ESHF, ATVs can appear ''deceptively easy'' to operate but in fact require ''repeated practice to drive safely.'' Even at low speeds ATV drivers need to have ''situational awareness necessary to negotiate hazards on unpaved terrain'' and make ''quick judgments'' with regard to steering, speed, braking, weight shifting and terrain suitability. Consumers who underestimate the difficulty of riding ATVs may conclude that the cost of the training, including the costs in terms of time and travel, will exceed the benefits. It is likely that more consumers will be induced to take training if the manufacturers emphasize the importance of training to consumers and offer them free training.

The benefits of training to new ATV drivers could be substantial. ESHF indicates that training may act as a surrogate for experience because it exposes new ATV drivers to situations they will encounter riding off-road and teaches them the proper driving behavior to navigate those situations. The Directorate for Epidemiology estimates, based on the results of the 2001 ATV injury and exposure surveys, that formal training may reduce the risk of injury by about half. The application of this result, in combination with the HF finding that training may function as a surrogate for driving experience, allows us to quantify the possible benefits of training.

A recent ATV risk analysis found a strong inverse relationship between driving experience and the risk of hospital emergency department (ED) treated injury. Based on this analysis, risk in the first year of riding was about 65 percent higher than the risk in the second year, and about twice the risk of the third year. Assuming that formal training reduces risk by half in the first year of ATV use (i.e., acts as a surrogate for experience), the risk of ED injury for a male driver under the age of 36 on a 325 cc four-wheel ATV, would decline by about 0.0083. According to the CPSC's Injury Cost Model, the average societal cost of an ATV-related ED injury amounted to about $60,250 in 2004 dollars. Consequently, the expected benefits of training would amount to about $500 (0.0083 * $60,250) per new rider taking the training. The risks for female drivers are less than for males. Using the same approach, the ED risk reduction for new female riders (under age 36, and on a 325 cc, four-wheel ATV) in the first year would be about 0.0029. The expected benefit of training an inexperienced female driver would therefore be about $175 (0.0029 * $60,250). Given that about 63 percent of drivers were male in 2001, the average risk reduction for male and female drivers would amount to about 0.0063; the expected benefits would average about $380 (i.e., 0.63($500) + 0.37($175)).

In addition to preventing non-fatal ED injuries, training would also likely reduce ATV-related injuries initially treated outside of hospital EDs and ATV-related deaths (see the appendix). While the risk model formally applies to ED injuries, it does not seem unreasonable to assume that the impact of training on non-ED injuries and deaths would be similar. Consequently, if the relationships in the risk model apply proportionally to non-ED injuries and deaths, the expected non-fatal injury reduction benefits for a typical new driver (weighted by the proportion of male and female drivers) would amount to about $220 and the expected benefits associated with the reduction in deaths would amount to about $170 per trainee.[17]

Based on this analysis, the expected benefits of training new riders could therefore amount to about $770 ($380 + $220 + $170) per rider. Factoring in reasonable estimates of the costs of the training to the consumers, the benefit of training for new riders should exceed the costs. For example, if the course fee is $125 and a trainee must give up 10 hours to take the course (including transportation to and from the training site) then the cost of training to a consumer who valued his or her time at $17 per hour would be about $295.[18] Consequently, the net benefits of training to this consumer would be about $475.

A major assumption in this cost-benefit comparison is that riders taking advantage of the training program would be inexperienced drivers who would take the training early in the first year of ATV riding. The expected benefits would be lower if the training were taken later. For example, if the analysis just completed had assumed the training were taken in the second year of ownership (rather than the first), the estimated gross benefits would have been about $470. Note, however, that while net benefits would have been lower (about $175), they are still positive. Hence even if some riders take the training after the first year of riding, the benefits of the training are still likely to exceed the costs. This suggests that the results of the cost-benefit comparison may not be very sensitive to the timing of the training.

ATV manufacturers that account for about 90 percent of all U.S. ATV sales already offer free training to their

[17] These calculations were based on information provided in the appendix to the preliminary regulatory analysis. According to the appendix, there were about 1.49 non-ED injuries for every ED injury in 2001. If the reduction in risk associated with preventing non-ED injuries were proportional to the reduction in the ED injury risk, the reduction would amount to 0.0093 (0.0063 * 1.49). And, since the costs of the non-ED injuries averaged about $23,700, the expected benefits from preventing these injuries would be about $220 (0.0093 * $23,700) per trainee. Similarly, there were about 0.0054 deaths for every ED-injury. Consequently, if the reduction in the fatality risk were proportional to the reduction in the ED injury risk, the reduction would amount to about 0.000034 (0.0063 * 0.0054). Assuming a value of statistical life of $5 million, the expected benefits of reductions in the fatality risk would amount to about $170 per trainee.

[18] The SVIA sponsored training for new riders is approximately one-half day in length. Assuming that a trainee must give up 10 hours to take the training allows for travel to and from the site. The ''value of time'' estimate is based on the average net compensation for 2004 as reported by the Social Security Administration ($34,197.63 for the year, which is about $17 per hour).

consumers.[19] Therefore, the primary impact of this requirement will be to extend the free training offer to people who purchase ATVs from manufacturers or importers that do not now offer free training. These manufacturers account for about 10 percent of total domestic ATV sales.

In spite of the offers of free training and other incentives, few ATV riders take formal safety training. Based on the 2004 Rider Training Summary provided by the SVIA, about 35 percent of first-time ATV purchasers who were offered this training by member firms took advantage of it. Since first-time purchasers accounted for about 20 percent of new ATV purchases, this suggests that only about 7 percent of all purchasers of new ATVs actually took the training. Assuming that this pattern will hold for the manufacturers or importers that are not now offering free training, one can expect that perhaps 7 percent of their consumers will take the training. Approximately 950,000 ATVs are sold annually. Because manufacturers that do not already offer free training account for about 10 percent of the market, this provision would likely increase the number of riders trained annually by 6,000 to 7,000 ($.07 \times 92{,}000$). If the benefits of the training are $770 per trainee and the cost of the training is $295, this could result in a net benefit of about $3.3 million annually ($(\$770 - \$295) \times 7{,}000$).

There would be some recordkeeping costs imposed on retailers and manufacturers by the proposed rule. The retailers would be required to prepare a training certificate that entitles each qualified member of the purchaser's immediate family and obtain the purchaser's signature on a form that acknowledges the receipt of the free training certificate. The signed original of this form must be kept by the retailer and copies provided to both the purchaser and the manufacturer.

The cost of preparing and filing the training certificates and acknowledgement forms is estimated to be about $1.38 per ATV sold. This is based on it taking approximately 1 minute to complete the training certificate and the acknowledgement form. An additional minute might be required to distribute the copies of the forms to the purchaser, the manufacturer, and the retailer's files. Time is valued at $21.32.[20] The cost of the blank forms, postage, and other supplies, accounts for the remaining $0.31.

Means for Reporting Safety Complaints and Concerns. The proposed rule will require that each manufacturer provide consumers with a means of relaying safety or hazard related information concerning an ATV to the manufacturer or importer. Manufacturers must make available for this purpose a domestic telephone number and mailing address, and a Web site or email address. This contact information must be contained in the owners' manuals which will also be required to provide consumers with the instructions for reporting safety or hazard information to the CPSC.

This provision could provide manufacturers with an early alert if there is a potential hazard or defect with one of their products. This could allow manufacturers to take preemptive actions to minimize the risk of injury due to the problem. However, this benefit cannot be quantified because we cannot predict how frequently such a problem will occur or how reliably it will be reported to the manufacturer by consumers.

However, the cost of providing a means to report safety related problems is low. Virtually all manufacturers or distributors that sell ATVs in the U.S already have domestic telephone numbers, addresses, and Internet sites. The additional cost of inserting this information in an owner's manual is very low. In fact, many manufacturers and distributors already do this.

Discussion. CPSC has been monitoring ATV-related injuries and promoting ATV safety since the early 1980s. Over that time, it has negotiated several voluntary agreements with major ATV manufacturers that have improved the safety of ATVs, encouraged formal safety training for ATV riders, and promoted safe ATV riding practices. However, as the ATV market has grown, new manufacturers and importers have entered the market that are not party to any voluntary agreements with the CPSC with regard to ATV safety. As the number of new participants increases, it becomes increasingly difficult to maintain voluntary agreements with all manufacturers and importers. In the absence of either mandatory requirements or voluntary agreements, CPSC has no effective mechanism for enforcing safety standards and practices. Moreover, if the market share of manufacturers and importers that are not party to any agreement with the CPSC increases, manufacturers that are parties to agreements may resist renewing the voluntary agreements.

The proposed rule would ensure that key elements of the voluntary agreements are extended to all ATV manufacturers and distributors. Because manufacturers and distributors that account for about 90 percent of the market already conform to these requirements (and much of the remaining 10 percent conform to at least some of the requirements) the proposed standard may not significantly lower the number of injuries from their current levels. However, it will establish some minimum enforceable standards that all firms that sell ATVs in the U.S. will be expected to meet.

Where the benefits and costs of the individual provisions can be quantified, this analysis has shown that the benefits are expected to exceed the costs (i.e., a ban on 3-wheel ATVs and training inexperienced ATV riders). For other provisions, the costs of complying with the standard will be low on a per unit basis (i.e., providing warning labels and safety information at the point of sale, a safety video, and means for reporting safety hazards or concerns to the manufacturer). Although the benefits of these cannot be quantified, they provide consumers with information that may help them choose an appropriate ATV for the rider and may reduce some unsafe riding behaviors. The costs of complying with each element of the requirements of the mechanical standard have not been quantified. However, each of the requirements would provide some safety benefits. Moreover, the vast majority of ATVs sold are already thought to be in compliance.

5. Alternatives to the Proposed Rule

The Commission could consider alternatives to the proposed rule including continuing to pursue voluntary actions rather than a mandatory rule. Other alternatives include adopting some parts of the proposed rule, but not others. Additionally, the staff considered other requirements for headlamps and training.

Not Adopting a Mandatory Rule and Continuing to Pursue Voluntary Actions. CPSC has been successful in gaining the cooperation of the largest ATV manufacturers and some of the smaller ones in working voluntarily to reduce the number of ATV-related injuries. However, entry into the ATV market is relatively easy. The number of

[19] In addition to offering free training, some ATV manufacturers offer additional incentives to encourage first-time buyers to take ATV safety training. For example, in addition to providing free training, some manufacturers give first-time purchasers an additional $100 if they complete the training. Some manufacturers also offer the free training to other members of the purchaser's family.

[20] This is the average hourly wage of motor vehicle sales workers reported by the Bureau of Labor Statistics in July 2004 (inflated to 2006 dollars).

manufacturers and importers has increased substantially in even the last few years: from about 7 manufacturers and importers in 1995, to more than 87 today. As the number of manufacturers increases it will be increasingly difficult to negotiate voluntary agreements with every one. To the extent that some new entrants do not conform to the agreements, there could be some economic pressure on others to limit their cooperation in the future.

It should also be noted that promulgating a mandatory rule does not rule out future CPSC efforts, either voluntary or mandatory, to further improve ATV safety.

Promulgating Portions of the Proposed Rule. Each of the major provisions of the proposed rule (e.g., mechanical requirements, ban of 3-wheel ATVs, and so on) could be considered independently. If the Commission believes that the benefits of any of the individual provisions do not bear a reasonable relationship to the costs, or for some other reason should not be mandated, it could exclude those provisions from a proposed rule.

Allowing Headlamps on Youth ATVs. The justification for the prohibition of headlamps on youth ATVs is to discourage children from riding after dark. Riding after dark is believed to be a significant risk factor for children. Also it can be difficult to supervise children riding ATVs in low light conditions. The Commission believes that allowing headlamps on youth ATVs would encourage children riding after dark.

There is a counter argument that if some children ride after dark or in low light conditions anyway (or if they do not return from a trip begun during daylight before dark) then allowing headlamps on youth ATVs could reduce the risk of injury by better illuminating the rider's path. It is also possible that the prohibition could cause some young teens to ride adult ATVs if they were involved in some ATV-related activities with parents or older siblings after dark. This could increase the injury risk since, as described earlier, the risk of injury for a child riding an adult ATV is twice that of riding a youth ATV.

The Commission does not have the data to provide statistical support to either argument. However, in the judgment of ESHF, the decrease in injuries resulting from discouraging after-dark riding by children by prohibiting headlamps on youth ATVs probably outweighs the increase in risk to those children who might still occasionally ride after dark.

Not Mandating Stop Lamps. As an alternative to mandating stop lamps, the CPSC considered following ANSI/SVIA–1–2001 by allowing, but not requiring, stop lamps on all ATVs. Currently, CPSC staff believes that most adult ATVs have stop lamps, but most youth ATVs do not. If stop lamps were not mandated, the practice of installing stop lamps on adult ATVs, but not youth models, is likely to continue. This is probably due in part to the lower added cost of installing stop lamps on adult ATVs, where some of the steps can be combined with the installation of tail lamps that are already required.

The benefit of stop lamps is that they can alert a driver when the driver of a leading vehicle has applied his or her brakes, which can increase the chance of the trailing driver reacting appropriately, either by applying his or her own brakes or taking evasive maneuvers and avoiding a rear-end collision. It can be anticipated that there are situations where ATVs would be traveling in a row on a trail and a driver may stop unexpectedly. While the staff has not been able to quantify the benefits, in some cases, the activation of a stop lamp may help to avoid a collision.

The cost of including stop lamps on ATVs is the cost of the materials (e.g., bulbs, switches, wiring, and lenses) and labor to install the stop lamps during the manufacturing process, and the cost of redesigning the body of the ATV to accommodate the stop light housing. This cost has not been quantified. Although the cost is not expected to be very expensive in absolute terms, the cost could amount to several dollars or more per ATV, especially in the case of youth ATVs that are not currently equipped with any wiring for lighting.

More Stringent Training Requirements. The CPSC considered including more stringent training requirements in the proposal, including requiring that at least 8 hours of training, along with specific requirements for written and riding tests, be provided, and that the student-teacher ratio not exceed 4:1. The minimum time requirements would be intended to ensure that there would be sufficient time to cover all topics that should be covered in a safety course and to give each student enough time to practice each skill until they had reached a satisfactory level of proficiency. The written and riding tests would provide a mechanism for the instructor to give the student specific feedback concerning his or her performance. A student-teacher ratio of 4:1 would ensure that each student gets individual attention.

However, there are drawbacks to mandating the more stringent requirements outlined above. The training program of the ATV Safety Institute, which is the leading ATV safety training provider, is approximately one-half day in length, there are no written or driving tests, and a 4:1 student-teacher ratio is encouraged but not required. Therefore, mandating the more stringent requirements could increase the cost of the training from its present level. Mandating a minimum length for the training and mandating a lower student-teacher ratio could possibly reduce the availability of training. Moreover, some new ATV purchasers who are willing to set aside the time to participate in a one-half day training program might not be willing to set aside a full day for the program, which for some trainees could include an overnight stay if the training site was a substantial distance from their home.

J. Paperwork Reduction Act

The proposed standards will require manufacturers (including importers) to perform testing and require manufacturers and retailers to keep records. For this reason, the rules proposed below contain ''collection of information requirements'' as that term is used in the Paperwork Reduction Act, 44 U.S.C. 3501–3520. Therefore, the proposed rule is being submitted to the Office of Management and Budget (''OMB'') in accordance with 44 U.S.C. 3507(d) and implementing regulations codified at 5 CFR 1320.11. The estimated costs of these requirements are discussed below.

1. Testing and Recordkeeping Costs

Manufacturers. The proposed rule would require manufacturers (including importers) to perform, or cause to be performed, testing sufficient to ensure that each ATV conforms to the requirements in the proposed rule. The requirements in the proposed rule are based on ANSI/SVIA–1–2001.

As discussed in section I above, the specified tests will require some time and equipment. They are estimated to take one day (8 hours) or less and would be conducted by at least one other mechanical engineer. If the total labor costs were $90 per hour, then the cost of conducting the tests would be about $720 per model (8 hours × $90). As discussed in the Preliminary Regulatory Analysis above, staff estimates the cost of the equipment used in the testing to be about $500. Documentation of the tests could add perhaps another $100 to the cost of the testing and record keeping.

These estimates suggest that the full testing and recordkeeping costs of the proposed rule could be about $1,320 per

model. Based on staff's identification of 131 different ATV models for the 2001 and 235 different ATV models for the year 2003 and the significant increase in sales of ATVs in recent years, there might be 500 different ATV models today. Therefore, the full testing and recordkeeping costs could be $660,000 per year, assuming models are changed annually.

Because several ATV manufacturers conform to ANSI/SVIA–1–2001 and should already be performing the testing called for in the proposed rule, the proposed rule will not impose additional testing burdens on these manufacturers. The staff estimates that these manufacturers account for at least 150 ATV models. Therefore, the testing and recordkeeping cost that could be attributed to the proposed rule that would not be incurred in the absence of the rules, could be less than $462,000 annually ($660,000 − 150 × $1,320).

Retailers. Retailers would be required to provide certificates for free training as discussed above. Additionally, each retailer would be required to maintain a record of the age acknowledgment statement and the training acknowledgment statement. The retailer will be required to write in the vehicle identification number on the training certificates that will be provided to the purchaser. The purchaser will be required to sign the original of each form and the retailer will have to maintain the originals in his or her files for 5 years after the date of the purchase. A copy of the age disclosure statement and training availability statement must also be sent to the manufacturer (or importer). The forms must be made available to CPSC representatives upon request.

These records are not complex and simply provide some basic information to the consumer (i.e., the minimum age one should be to ride the particular ATV and contact information for free ATV safety training). No information needs to be collected by the retailer, other than the consumer's signature. No particular skill will be required to generate or maintain these records. However, retailers that sell ATVs over the internet, or in other settings where a representative of the retailer does not meet personally with the consumer, may have to develop new procedures for obtaining the consumers' signatures. These might include not shipping the ATV until the consumer has returned the signed originals to the retailer.

The cost of preparing and filing these records is estimated to come to about $2.33 per ATV sold. This estimate assumes that an average of 3 forms and training certificates will be required for each ATV: The age acknowledgement form, the availability of training acknowledgement form; and an average of 1 training certificate. It is further assumed that each form takes an average of one minute to complete. An additional minute will be required for the retailer to send copies of the forms to the manufacturer and the manufacturer will require an additional minute to properly file the copies. The time is valued at $21.32 per hour.[21] The cost of the blank forms themselves, postage, envelopes, and other supplies might add another $0.55 to the cost.

If 950,000 ATVs are sold annually, the total recordkeeping cost on retailers will be about $2.2 million annually. The number of ATV retailers is estimated to be about 5,000. Therefore, the recordkeeping costs will average about $440 per retailer annually. Training certificates are already provided with about 90 percent of the ATVs sold. Therefore, about $0.3 million of this cost is already being incurred.

K. Initial Regulatory Flexibility Analysis

1. Introduction

The Regulatory Flexibility Act (''RFA'') generally requires that agencies review proposed rules for their potential economic impact on small entities, including small businesses. Section 603 of the RFA calls for agencies to prepare and make available for public comment an initial regulatory flexibility analysis describing the impact of the proposed rule on small entities and identifying impact-reducing alternatives. Accordingly, the staff prepared an initial regulatory flexibility analysis which is summarized below.

2. Reporting, Recordkeeping and Other Compliance Requirements

It is difficult to estimate accurately the number of small entities that could be impacted for two reasons. One reason is that as noted below, the number of firms participating in the market has increased significantly over the last 10 years. Secondly, it is relatively easy for a firm to enter and exit the market. It is certain, however, that the ATV market has grown significantly in recent years.

Manufacturers (and Importers). The proposed rule imposes some requirements on manufacturers (which includes importers) of ATVs. The number of firms that manufacture or import ATVs is increasing. From the time ATVs were first introduced in the early 1970s until about 2000, virtually all ATVs were manufactured and distributed by a few large firms. Since 2000, the number of smaller importers has increased significantly. The staff now believes that there are at least 87 manufacturers or importers that supply ATVs to the U.S. market. However, seven large manufacturers still account for about 90 percent of the U.S. ATV market. Thus, small manufacturers or importers have a combined market share of perhaps 10 percent of the market.[22]

Many of the new entrants are small importers that import ATVs from manufacturers based in Korea, Taiwan, and China. Virtually all manufacturers and importers of ATVs, including the small ones, are believed to manufacture and import products other than ATVs. These other products often include other motorized vehicles, such as motorcycles, motor scooters, go-carts, and mini bikes. In fact, of the ATV import operations that CPSC staff inspected in 2005, none sold ATVs exclusively and most received a majority of their revenue from other products.

Conducting the tests to ensure that ATVs comply with the proposed mechanical standards will require professional engineering services. ATV manufacturers probably have qualified engineers on staff or can obtain the services of qualified engineers to conduct the tests. The documentation of the tests would likely be completed by the engineer conducting the tests.

As discussed in sections I and J above, estimates suggest that the full testing and recordkeeping costs of the proposed rule could be about $1,320 per model. Staff estimates that there might be 500 different ATV models today. Therefore, the full testing and recordkeeping costs could be $660,000 per year, assuming models are changed annually.

As discussed above, the proposed rule will not impose additional testing burdens on the manufacturers who already conform to ANSI/SVIA–1–2001. The staff estimates that these manufacturers account for at least 150 ATV models. Therefore, the testing and recordkeeping cost that could be attributed to the proposed rule that would not be incurred in the absence of the rule, could be less than $462,000 annually ($660,000 − 150 × $1,320). The annual cost of the testing per small manufacturer could be $5,000 to $6,000

[21] This is the average hourly wage of motor vehicle sales workers reported by the Bureau of Labor Statistics in July 2004 (inflated to 2006 dollars).

[22] According to the U.S. Small Business Administration size standards, an ATV manufacturer (NAICS code 336999) with fewer than 500 employees would be considered small and an ATV wholesaler (NAICS code 423110) with fewer than 100 employees would be considered small.

assuming an average of 4 to 5 models require testing each year.

Importers that do not manufacture ATVs can probably work with the foreign manufacturers to ensure that the ATVs meet the mechanical requirements and the documentation is prepared and transferred to the importer. Where the compliance testing is conducted by persons not fluent in English, an importer may have to employ the services of a qualified translator who can translate the records accurately into English.

The requirement that all ATVs be equipped with a stop lamp would impose some cost burden on ATV manufacturers. Although many adult ATVs are already equipped with stop lights, most youth ATVs are not. Many small manufacturers and importers supply youth ATVs to the U.S. market. The cost of including stop lamps on ATVs includes the cost of the materials (e.g., bulbs, wiring, switches, lenses, and housing), the cost of the labor to install the materials, and the cost of modifying the bodies of ATVs to accommodate stop lamps. Stop lamps are standard on many different vehicles and, as noted, are included on most adult ATVs. However, CPSC has not developed firm estimates of the added cost to equip youth ATVs with stop lamps.

The requirement that youth ATVs be equipped with automatic transmissions could impose some cost on manufacturers whose youth models are not already so equipped. However, most youth ATV models, including those from small importers, already appear to be equipped with automatic transmissions. The models identified by the staff that did not have automatic transmissions were some ATVs intended for children 12 years of age or older that were equipped with automatic clutches. An automatic clutch, which still requires the driver to manually select the appropriate gear, would not meet this requirement for youth ATVs.[23]

The cost of providing the required warning labels, hangtags, and additional pages in owner's manuals is low. Many, if not most, manufacturers already comply, at least to some degree, with this requirement. However, some foreign manufacturers may require the services of a qualified translator to ensure that the labels and manuals are written in clear and understandable English. Other special skills probably will not be required since the required safety content of the warning labels, hangtags, and manuals is specified in the rule.

The proposed rule requires that manufacturers provide purchasers with a video that provides safety information concerning ATVs. The major manufacturers already provide the safety videos that conform to this requirement. The cost of duplicating a video or DVD is no more than a few dollars. However, the cost of producing the safety video could be several thousand dollars. The impact on small importers could be reduced if a third party video could be licensed or shared by many small manufacturers or importers.

Manufacturers would also be required to keep a copy of the owner's manuals and the safety video for each model on file for at least 5 years. It is likely that many manufacturers would do this even in the absence of a mandatory rule. The storage costs of these items probably would not exceed $10 per model. The cost could be lower since the same safety video would likely be used for all ATV models produced or imported by a manufacturer and could be used for several years. Owner's manuals also might cover more than one model.

The proposed rule requires manufacturers to offer ''free'' ATV safety training to each purchaser of a new ATV and to each member of the purchaser's family who meets the age qualification to drive the ATV. The manufacturer or importer must make arrangements with a training provider to provide this training. The training providers must offer their services reasonably close to where the purchaser lives and within a reasonable time of the purchase. There are groups, such as the ATV Safety Institute (sponsored by the Specialty Vehicles Institute of America (or ''SVIA'')) that offer ATV safety training that should comply with this requirement. Based on the listed prices for the SVIA training, the cost is between $75 and $125 per person. Based on the experience with the manufacturers that have signed LOUs with the CPSC, it is expected that about 30 to 40 percent of ATV purchasers with little riding experience will take advantage of the offer of free safety training. However, since most ATV purchasers are already experienced drivers, it is expected that less than 10 percent of all purchasers of new ATVs will take advantage of the free training offer.

The proposed rule would formalize a ban on the sale of new 3-wheel ATVs. CPSC reached voluntary agreements with ATV manufacturers to stop supplying 3-wheel ATVs to the U.S. market in 1988. The staff is not aware of any major manufacturers that are currently supplying 3-wheel ATVs to the U.S. market. However, the Office of Compliance has found evidence that some 3-wheeled vehicles that meet the definition of an ATV are being offered for sale to U.S. consumers on the internet. The formal ban in the proposed rule is intended to ensure no manufacturer or importer introduces a new 3-wheel ATV in the future. The ban should not impact the current operations of any manufacturer or importer.

Retailers. ATV retailers would have some responsibilities under the proposed rule, but none that would be expected to have a substantial impact. The CPSC staff have not determined the total number of ATV retail operations, but they certainly number in the thousands, a substantial number of which could be small businesses. Many ATV retailers are franchise operations of the larger ATV manufacturers or distributors. Other ATV retailers purchase their inventory from ATV importers and wholesalers. ATV retailers usually sell products in addition to ATVs, including motorcycles, scooters, and farm equipment. Some ATVs are offered for sale over the internet.

Each retailer will be required to prepare a ''training certificate'' that entitles each qualified member of the purchaser's immediate family to free ATV safety training. Additionally, the retailer will be required to prepare and maintain records of disclosure statements concerning age recommendations and availability of training. The retailer will provide copies of both forms to the purchaser and the manufacturers. The retailer and manufacturers would have to maintain the originals in their files for 5 years after the date of the purchase. The forms must be made available to CPSC representatives upon request.

As discussed in sections I and J above, the cost of preparing and filing these records is estimated to come to about $2.33 per ATV sold. The cost of the blank forms themselves, postage, envelopes, and other supplies might add another $0.55 to the cost. If 950,000 ATVs are sold annually, the total recordkeeping cost on retailers will be about $2.2 million annually. The number of ATV retailers is estimated to be about 5,000. Therefore, the recordkeeping costs will average about $440 per retailer annually.

The retailer will also be responsible for ensuring the warning labels and hang tags specified in the proposed rule remain on the vehicle at least until the

[23] The three youth ATV models equipped with automatic clutches were produced by three of the large ATV manufacturers.

purchaser has possession of it. In addition, the retailer would be responsible for ensuring that the safety video and owner's manual provided by the manufacturer or importer are transferred to the purchaser.

3. Other Federal Rules

The CPSC has not identified any Federal rule that either overlaps or conflicts with the proposed rule. Some states require training of ATV operators under some circumstances or require riders to wear certain protective gear. At least one state (North Carolina) has specified maximum engine sizes for ATVs intended for children under the age of 16 years.

4. Alternatives to the Proposed Rule

The proposed rule would essentially mandate provisions of a voluntary mechanical standard and certain provisions of agreements that CPSC has negotiated with the major ATV distributors. Manufacturers and distributors with an estimated combined market share of about 90 percent of the ATVs sold already comply with most of the provisions of the proposed rule. Because the rules are intended to ensure that all ATVs, distributors, and retailers meet these minimum requirements, CPSC has not identified any alternatives that would reduce the burden on small businesses and accomplish the goals of the proposed rule.

The option of continuing to rely on voluntary activity was considered by the staff. However, the rapid increase in the number of firms supplying ATVs to the market and the relative ease of entry and exit into the market make it impractical to negotiate individual agreements with each manufacturer and importer.

5. Summary and Conclusions

Many of the 87 or more companies that manufacture or import ATVs into the U.S. and an unknown number of the retailers are small entities. The proposed rule would impose some requirements on these firms. However, the requirements are needed to ensure that all ATVs meet some minimum safety requirements, that all ATV consumers receive some important safety information, and that all buyers be offered the training that is needed to safely operate ATVs. Some small entities are already meeting many of the provisions of the proposed rule.

L. Environmental Considerations

Usually, CPSC rules establishing performance requirements are considered to ''have little or no potential for affecting the human environment,'' and environmental assessments are not usually prepared for these rules (see 16 CFR 1021.5 (c)(1)). Moreover, most of the ATV industry is already thought to be in conformance with most of the provisions of the proposed standard. Therefore, it is unlikely that substantial changes will be made in production practices nor will a substantial number of products require modification or disposal.

M. Executive Order 12988 (Preemption)

As required by Executive Order 12988 (February 5, 1996), the CPSC states the preemptive effect of the ATV regulations proposed today as follows:

The regulations for youth ATVs are proposed under authority of the Federal Hazardous Substances Act (FHSA). 15 U.S.C. 1261–1278. Section 18 of the FHSA provides that, generally, if the Commission issues a rule under, or for the enforcement of, section 2(q) of the FHSA to protect against a risk of injury associated with, among other things, any toy or other article intended for use by children, ''no State or political subdivision of a State may establish or continue in effect a requirement applicable to such [article] and designed to protect against the same risk of illness or injury unless such requirement is identical to the requirement established under such regulations.'' 15 U.S.C. 1261n(b)(1)(B). Upon application to the Commission, a State or local standard may be excepted from this preemptive effect if the State or local standard (1) provides a higher degree of protection from the risk of injury or illness than the FHSA standard and (2) does not unduly burden interstate commerce. In addition, the Federal government, or a State or local government, may establish and continue in effect a non-identical requirement that provides a higher degree of protection than the FHSA requirement for the hazardous substance for the Federal, State or local government's own use. 15 U.S.C. 1261n(b)(2).

The proposed rule for adult ATVs is issued under authority of the Consumer Product Safety Act (CPSA). 15 U.S.C. 2051–2084. Section 26 of the CPSA sets out a preemption provision similar to that of the FHSA, specifically ''whenever a consumer product safety standard under the Act [CPSA] is in effect and applies to a risk of injury associated with a consumer product, no State or political subdivision of a State shall have any authority either to establish or continue in effect any provision of a safety standard or regulation which prescribes any requirements as to the performance, composition, contents, design, finish, construction, packaging, or labeling of such product which are designed to deal with the same risk of injury associated with such consumer product, unless such requirements are identical to the requirements of the Federal standard.'' 15 U.S.C. 2075(a). As with the FHSA preemption provisions, an exception for products for the state or political subdivision's own use and a petitioning procedure for an exemption from the otherwise applicable federal standard are provided.

Thus, with the exceptions noted above, the ATV requirements proposed in today's **Federal Register** would preempt non-identical state or local requirements for ATVs designed to protect against the same risk of injury.

N. Effective Date

The Commission proposes that these rules would become effective 180 days from publication of a final rule in the **Federal Register** and would apply to all terrain vehicles manufactured or imported on or after that date. The CPSA requires that consumer product safety rules take effect not later than 180 days from their promulgation unless the Commission finds there is good cause for a later date. 15 U.S.C. 2058(g)(1). Many of the requirements proposed in these rules are substantially the same as provisions of the ANSI/SVIA voluntary standard, which the major ATV manufacturers currently comply with, or of the LOU agreements, which the major ATV manufacturers have with the Commission. Therefore, the Commission believes that a 180-day effective date is appropriate.

O. Proposed Findings

The CPSA and FHSA require the Commission to make certain findings when issuing a consumer product safety standard or a rule under the FHSA. The CPSA requires that the Commission consider and make findings about the degree and nature of the risk of injury; the number of consumer products subject to the rule; the need of the public for the rule and the probable effect on utility, cost and availability of the product; and other means to achieve the objective of the rule while minimizing the impact on competition, manufacturing and commercial practices. The CPSA also requires that the rule must be reasonably necessary to eliminate or reduce an unreasonable risk of injury associated with the product and issuing the rule must be in the public interest. For a rule declaring a product a banned hazardous product, the CPSA requires that the Commission must find that no feasible consumer product safety standard would

adequately protect the public from the unreasonable risk. 15 U.S.C. 2058(f)(3).

In addition, the Commission must find that: (1) If an applicable voluntary standard has been adopted and implemented, that compliance with the voluntary standard is not likely to adequately reduce the risk of injury, or compliance with the voluntary standard is not likely to be substantial; (2) that benefits expected from the regulation bear a reasonable relationship to its costs; and (3) that the regulation imposes the least burdensome requirement that would prevent or adequately reduce the risk of injury. Id.

The FHSA requires essentially similar findings concerning unreasonable risk, voluntary standards and potential costs and benefits. Under the FHSA, the Commission must find that some aspect of the design or manufacture of the article it seeks to regulate presents an unreasonable risk of injury or illness. Id. 1261(s). The Commission must also make the findings concerning voluntary standards, relationship of costs to benefits, and least burdensome alternative as required by the CPSA. The findings must also be stated in the rules. These findings are discussed below.

Degree and nature of the risk of injury. According to the Commission's 2004 Annual Report on ATVs, the Commission has reports of 6,494 ATV-related deaths that have occurred since 1982. For 2003 alone, an estimated 740 ATV-related deaths were reported to the Commission. The estimated number of ATV-related injuries treated in hospital emergency rooms in 2004 was 136,100, which is an increase of about 8 percent over the 2003 estimate. These incidents occur when the operator of an ATV loses control of the vehicle, collides with another object, or otherwise becomes injured or dies while riding an ATV. Many incidents are related to behavior of the operator (such as riding on paved roads, carrying a passenger, driving at excessive speeds).

Number of consumer products subject to the rule. The market has increased substantially since ATVs were first introduced over thirty years ago. In 2005, an estimated 6.9 million ATVs were in use.

The need of the public for ATVs and the effects of the rule on their utility, cost and availability. The need of the public for ATVs is both for recreation and for work, particularly on farms and ranches in rural areas. The proposed rule will have minimal effect on the utility, cost and availability of ATVs. The mechanical provisions of the proposed rule are substantially similar to requirements of the voluntary standard with which the major ATV manufacturers comply. Costs should be small because the information provisions of the proposed rule are also currently being followed by the major ATV manufacturers. With the exception of the ban of three-wheeled ATVs, the proposed rule should not affect the availability of ATVs. In fact, a greater variety of youth ATVs may become more available.

Other means to achieve the objective of the rule while minimizing the impact on competition and manufacturing. Because most ATV manufacturers are currently complying with the ANSI/SVIA voluntary standard and are providing the information materials the proposed rule requires, the Commission does not believe that the proposed rule will have much effect on competition and manufacturing. It is likely, however, that newer entrants may need to take action to bring their ATVs into compliance with the proposed rule. This could have the effect of increasing the price for the newer entrants' imported ATVs. In the future, this could reduce the number of new entrants coming into the ATV market.

Unreasonable risk. As discussed above, the Commission has reports of 6,494 ATV-related deaths that have occurred since 1982 and for 2003 alone, an estimated 740 ATV-related deaths were reported to the Commission. The estimated number of ATV-related injuries treated in hospital emergency rooms in 2004 was 136,100. The proposed rules will establish mechanical standards for ATVs and requirements for the provision of safety information about operating ATVs. Included in this will be a requirement for manufacturers to provide free training. Many ATV manufacturers are currently in compliance with many of the proposed requirements. However, some of the additional requirements (such as requiring the age acknowledgment form and training acknowledgment form) or requirements that are somewhat different from current practice (such as clearer warning statements) may better inform consumers of ATV-related risks who may then be better able to reduce or avoid these risks. Moreover, the mandatory requirements will cover the increasing number of new entrants into the ATV market who are not following current voluntary standards or other safety practices that the major manufacturers are voluntarily following. This will reduce the risk of injury in the future as more such new entrants may enter the market.

Public interest. These rules are in the public interest because they may reduce ATV-related deaths and injuries in the future. Their mandatory nature will mean that all ATV manufacturers will have to comply with the mechanical and information requirements of the rules. The increasing number of new entrants will make it difficult to maintain voluntary agreements with manufacturers. By issuing mandatory requirements, the Commission will have the authority to enforce these requirements rather than relying on voluntary compliance.

Ban of three-wheeled ATVs. Three-wheeled ATVs are less stable and more difficult to steer than four-wheeled ATVs. The risk of sustaining a hospital emergency room-treated injury while operating a three-wheeled ATV is about 3 times the risk on a similar four-wheeled ATV. While there are many technical factors that make a four-wheeled ATV more dynamically stable than a three-wheeled ATV, one of the largest factors is the fourth wheel. Given the inherent difference in vehicle configuration, the Commission does not believe it is feasible to develop a performance standard for three-wheeled ATVs that would improve that vehicle's stability performance to that of a four-wheeled vehicle.

Voluntary standards. The current voluntary standard, ANSI/SVIA–1–2001, specifies requirements for the mechanical operation of single rider ATVs (both for adult and youth ATVs). Manufacturers are working to incorporate requirements for tandem ATVs into the voluntary standard. The major manufacturers appear to comply with most provisions of the voluntary standard. However, the voluntary standard does not contain information requirements for such things as warning labels, owners manuals and training. Thus, compliance with the voluntary standard alone would not be sufficient to adequately reduce or eliminate the risk of injury. Many ATV incidents occur because of the way the ATV is used. The Commission cannot issue requirements for how a product should be used (e.g., requiring helmets, prohibiting children from riding adult ATVs). To affect these behaviors the Commission must act through requirements directing manufacturers and retailers to take actions that inform consumers of the risks associated with ATVs and advise consumers how they could reduce these risks.

The major manufacturers have agreed to take many of the informational actions proposed in the rules through the LOUs they have entered into with the Commission. The LOUs are completely voluntary. A company could decide to change any of the actions it has agreed to at any time.

Although the major manufacturers appear to be complying with the voluntary standard and abiding by their LOUs, a growing portion of the ATV market may not be following the voluntary standard (and is not bound by the LOUs). These new entrants now comprise approximately 10 percent of the market. Given recent trends and the lower price of the new entrants' products, their share of the market is likely to increase.

Thus, the Commission finds that compliance with the ANSI/SVIA–1–2001 voluntary standard is not likely to eliminate or adequately reduce the risk of injury associated with ATVs, and it is unlikely that there will be substantial compliance with the voluntary standard.

Relationship of benefits to costs. Because most manufacturers are currently taking most of the actions that the proposed rules would require, costs from the proposed rules are likely to be small. The initial potential reduction of ATV-related deaths and injuries may also be small. However, mandating the mechanical and information requirements will mean that new entrants to the market, a group that has recently been increasing, will have to comply with the requirements as well. The proposed rule would impose some testing and recordkeeping costs. The staff estimates these to be about $462,000 annually. For many of the provisions, it is difficult to quantify benefits. However, for the training requirement alone, the Commission estimates the proposed provision could result in a net benefit of about $3.3 million annually. Given that in 2004 an estimated 136,000 ATV-related injuries were treated in hospital emergency rooms, and that an estimated 6,494 ATV-related deaths have occurred since 1982, if the proposed rule affects even a small number of potential deaths and injuries, the benefits would bear a reasonable relationship to the costs.

As for youth ATVs, the Commission proposes to establish categories of youth ATVs based on maximum speed rather than engine size. This should not impose additional costs on manufacturers because these delineations are similar to those already in the ANSI/SVIA–1–2001 voluntary standard. However, this change could lead to a greater variety of youth ATVs which could result in more children riding youth ATVs rather than larger, riskier adult models. Such a movement of children to youth ATVs could reduce ATV-related deaths and injuries because the risk of injury for riders under the age of 16 driving adult ATVs is about twice the risk of injury of those who are driving age-appropriate ATVs. Additionally, the proposed change could result in more children receiving formal training, and this too could reduce deaths and injuries.

Least burdensome requirement. As discussed above, the proposed rule is likely to impose only a small burden on most current ATV manufacturers and retailers. The Commission is essentially mandating the current practice that many manufacturers are following. Nevertheless, the proposed rule is likely to reduce the risk of injury associated with ATVs because it will enable the Commission to directly enforce the provisions of the rule and will bring new entrants under federal regulation.

P. Additional Instructions to the Staff and Request for Comments

The Commission instructs the staff to take the following actions and invites public comment on any of the issues raised.

With regard to youth ATVs:

1. Analyze all in-depth investigation reports and any other detailed reports of injuries we may have to children on ATVs to determine what factors contributed to the incidents and to determine whether additional changes could be made to the operational/handling characteristics of youth ATVs that would reduce or eliminate injuries and deaths due to those factors.
2. Test current youth models against one another to determine if there are characteristics of some models that make them more stable or otherwise less incident prone than other models.
3. Determine whether making the junior and/or pre-teen youth models less rider interactive (lateral stability, braking systems, etc.) could reduce or eliminate deaths and injuries on youth models.
4. Explore the feasibility of providing guidance to purchasers on the appropriate weight of the youth model ATV in relation to the weight of the rider and of providing guidance to manufacturers on an upper limit on the weight of the junior and pre-teen ATVs.
5. Do research to determine if the top speed of thirty miles per hour for the teen youth model is excessive and whether reducing the speed would reduce or eliminate deaths and injuries on those vehicles.
6. Determine how ATV training for children in the three age groups should be structured to maximize their ability to learn the safety information and riding skills (for example, should we require that a separate ATV training course for children be developed?).
7. Determine whether tandem youth ATVs are appropriate.
8. Analyze CPSC data to determine the desirability of illumination on youth ATVs (in both daytime and nighttime situations) to reduce deaths and injuries to riders.

With regard to ATVs in general:

1. As part of the on-going information and education campaign, Human Factors and other staff shall work with the Office of Information and Public Affairs to ensure that the core message that is developed with regard to children under 16 driving ATVs is as effective as possible. Explore whether two campaigns should be developed: One directed to children and one directed to the parents/adult drivers.
2. Review and revise, where necessary, the incident reporting form on the ATV Web site to solicit as much information about ATV incidents as possible to assist staff in current and future ATV incident evaluations.
3. Create a new tab on the ATV Web site that would contain everything parents ought to know about ATV safety for their children.
4. Detail the plan for enforcement and monitoring of the ATV age guidelines under the new proposal and explain how it would differ from current practice and what additional enforcement tools it would provide the Commission.

Q. Conclusion

For the reasons stated in this preamble, the Commission preliminarily concludes that all terrain vehicles intended for adults present an unreasonable risk of injury which can be reduced through the requirements of this proposed rule. With regard to ATVs intended for children under the age of 16, the Commission preliminarily concludes that ATVs that do not meet the requirements specified for youth ATVs are hazardous substances under section 2(f)(1(D) of the FHSA. The Commission also preliminarily concludes that three-wheeled ATVs present an unreasonable risk of injury and there is no feasible consumer product safety standard that would adequately protect the public from the risk of injury.

List of Subjects

16 CFR Part 1307

Consumer protection, Imports, Law enforcement, Recreation and recreation areas, Safety.

16 CFR Part 1410

Consumer protection, Imports, Information, Labeling, Law enforcement, Recreation and recreation areas, Reporting and recordkeeping requirements, Safety.

16 CFR Part 1500

Consumer protection, Hazardous materials, Hazardous substances, Imports, Infants and children, Labeling, Law enforcement, Toys.

16 CFR Part 1515

Consumer protection, Imports, Infants and children, Information, Labeling, Law enforcement, Recreation and recreation areas, Reporting and recordkeeping requirements, Safety, Youth.

For the reasons stated in the preamble, the Commission proposes to amend Chapter II of title 16 of the Code of Federal Regulations as follows:

1. Add part 1307 to read as follows:

PART 1307—BAN OF THREE-WHEELED ALL TERRAIN VEHICLES

Sec.
1307.1 Scope and application.
1307.2 Purpose.
1307.3 Definitions.
1307.4 Banned hazardous products.
1307.5 Findings.
1307.6 Effective date.

Authority: 15 U.S.C. 2057 and 2058.

§ 1307.1 Scope and application.

In this part 1307 the Consumer Product Safety Commission declares that three-wheeled all terrain vehicles, as defined in § 1307.3, are banned hazardous products under sections 8 and 9 of the Consumer Product Safety Act (15 U.S.C. 2057 and 2058).

§ 1307.2 Purpose.

The purpose of the rule in this part is to prohibit the sale of three-wheeled all terrain vehicles. These products present an unreasonable risk of injury as a three-wheeled ATV is inherently less stable than an ATV with four wheels resulting in 3 times the risk of injury compared to a four-wheeled ATV.

§ 1307.3 Definitions.

(a) The definitions in section 3 of the Consumer Product Safety Act (15 U.S.C. 2052) apply to this part 1307.

(b) *Three-wheeled all terrain vehicle,* or *three-wheeled ATV,* means a motorized vehicle that travels on three low pressure tires, has a seat designed to be straddled by the operator, has handlebars for steering, and is intended for off-road use on non-paved surfaces.

§ 1307.4 Banned hazardous products.

Any three-wheeled ATV, as defined in § 1307.3(b), that is manufactured or imported on or after [180 days from issuance of final rule] is a banned hazardous product.

§ 1307.5 Findings.

(a) *The degree and nature of the risk of injury.* The Commission finds that the risk of injury which the regulation in this part is designed to eliminate or reduce is that of severe injury or death occurring when the operator of a three-wheeled ATV loses control of the vehicle, collides with another object, or otherwise becomes injured or dies while riding a three-wheeled ATV. Three-wheeled ATVs are less stable and more risky than four-wheeled ATVs. The risk of sustaining a hospital emergency room treated injury while operating a three-wheeled ATV is about 3 times the risk on a similar four-wheeled ATV.

(b) *Products subject to the ban.* Three-wheeled ATVs are motorized vehicles that travel on three low pressure tires, have a seat designed to be straddled by the operator, have handlebars for steering, and are intended for off-road use on non-paved surfaces.

(c) *The need of the public for three-wheeled ATVs and the effects of the rule on their utility, cost and availability.* The Commission finds that the public's need for three-wheeled ATVs (given the continued availability of four-wheeled ATVs) is small and that the effect of this rule on the cost, utility, and availability of three-wheeled ATVs will also be small. The major manufacturers of ATVs have not sold three-wheeled ATVs in the United States since 1988. Although a few new entrants to the market have started to offer three-wheeled ATVs, and some models that were manufactured before 1988 are still in use, three-wheeled ATVs are not widely available at this time. Even before 1988, the market for three-wheeled ATVs compared to four-wheeled ATVs was declining. In 1986, about 80 percent of ATVs sold in the United States had four wheels. For most individuals, the utility difference between a three-wheeled ATV and a four-wheeled ATV is minimal. Four-wheeled ATVs will continue to be available. Except for the fact that three-wheeled ATVs are considerably less stable than four-wheeled ATVs, they are functionally equivalent.ă≤ One can use a four-wheeled ATV in essentially the same manner as a three-wheeled ATV.

(d) *Alternatives.* The Commission has considered other means of obtaining the objective of this ban, but has found none that would adequately reduce the risk of injury. While there are many technical factors that make a four-wheeled ATV more dynamically stable than a three-wheeled ATV, one of the largest factors is the fourth wheel. Given the inherent difference in vehicle configuration, the Commission does not believe it is feasible to develop a performance standard for three-wheeled ATVs that would improve that vehicle's stability performance to that of a four-wheeled vehicle.

§ 1307.6 Effective date.

The rule in this part becomes effective [180 days from issuance of final rule] and applies to all three-wheeled ATVs manufactured or imported on or after that date.

2. Add part 1410 to Subchapter B to read as follows:

PART 1410—REQUIREMENTS FOR ADULT ALL TERRAIN VEHICLES

Subpart A—General Requirements

Sec.
1410.1 Purpose, scope, effective date.
1410.2 Definitions.
1410.3 Requirements in general.
1410.4 Findings.

Subpart B—Requirements for Equipment, Configuration and Performance for Single Rider ATVs

1410.5 Equipment and configuration requirements.
1410.6 Maximum speed capability test
1410.7 Service brake performance test.
1410.8 Parking brake performance test.
1410.9 Pitch stability requirements.

Subpart C— Requirements for Labeling, Point of Sale Information and Instruction

1410.10 Labeling requirements.
1410.11 Hangtag requirements.
1410.12 Age acknowledgment.
1410.13 Instructional/Owner's manual.
1410.14 Safety video.
1410.15 Instructional training.

Subpart D—Requirements for Tandem ATVs

1410.16 Requirements in general for tandem ATVs.
1410.17 Equipment and configuration requirements for tandem ATVs.
1410.18 Pitch stability requirements for tandem ATVs.
1410.19 Information requirements for tandem ATVs.

Subpart E—Certification/Testing/Recordkeeping

1410.20 Certification.
1410.21 Testing.
1410.22 Recordkeeping.

Figures

Figure 1 to Part 1410—Operator Foot Environment—Plan View
Figure 2 to Part 1410—Operator Foot Environment—Front View
Figure 3 to Part 1410—Age Acknowledgment Form
Figure 4 to Part 1410—Training Acknowledgment Form
Figure 5 to Part 1410—Operator and Passenger Foot Environment—Plan View
Figure 6 to Part 1410—Operator and Passenger Foot Environment—Front View

Authority: 15 U.S.C. 2056–2058, 2063, 2065 and 2076(e).

§ 1410.1 Purpose, scope, effective date.

(a) *Purpose.* The purpose of the standard of this part is to reduce deaths and injuries associated with adult all terrain vehicles (ATVs) by ensuring that such ATVs meet certain technical requirements and that consumers have sufficient safety information about operating such ATVs.

(b) *Scope and effective date.* All terrain vehicles, as defined in § 1410.2(a) manufactured or imported on or after [180 days after final rule is issued] are subject to the requirements of the standard in this part and 16 CFR Part 1307. ATVs intended for use by an operator less than sixteen (16) years of age are subject to the requirements in 16 CFR 1500.18(a)(20) and 16 CFR part 1515.

§ 1410.2 Definitions.

In addition to the definitions in section 3 of the Consumer Product Safety Act (15 U.S.C. 2052), the following definitions apply for purposes of this part 1410.

(a) *All terrain vehicle,* or *ATV,* means a three- or four-wheeled motorized vehicle that travels on low pressure tires, has a seat designed to be straddled by the operator (and a passenger if provision is made for carrying a passenger), has handlebars for steering, and is intended for off-road use on non-paved surfaces. For purposes of this part, all terrain vehicle, or ATV, means an ATV that is intended for use by an operator 16 years of age or older.

(b) *Footrest* means a structural support for the operator's feet, which can include footpegs and footboards.

(c) *Gearshift control* means a control for selecting among a number of sets of transmission gears.

(d) *Handlebar* means a device used for steering and rider support and as a place to mount hand-operated controls.

(e) *Low pressure tire* means a tire designed for off-road use on ATVs, and having a recommended tire pressure of no more than 69 kPa (10 psi).

(f) *Manual clutch* means a device activated by the operator to disengage the engine from the transmission.

(g) *Manual fuel shutoff control* means a device designed to turn the fuel flow from the fuel tank on and off.

(h) *Manufacturer* means any entity that produces ATVs. For purposes of this part 1410, an importer is a manufacturer.

(i) *Mechanical suspension* means a system which permits vertical motion of an ATV wheel relative to the chassis and provides spring and damping forces.

(j) *Parking brake* means a brake system which, after actuation, holds one or more brakes continuously in an applied position without further action.

(k) *Passenger handhold* means a device on a tandem ATV to be grasped by the passenger to provide support and help maintain balance while riding as a passenger.

(l) *PIN* means a Product Identification Number assigned in accordance with *Recreation Off-Road Vehicle Product Identification Numbering System,* SAE International Consortium Standard, ICS–1000, issued 2004–9.

(m) *Retailer* means, for purposes of this part 1410, a person to whom an ATV is delivered or sold for purposes of sale or distribution by such person to a consumer.

(n) *Safety alert symbol* means the symbol which indicates a potential personal injury hazard as defined in section 4.10 of ANSI Z535.4–2002, *American National Standard for Product Safety Signs and Labels.*

(o) *Service brake* means the primary brake system used for slowing and stopping a vehicle.

(p) *Spark arrester* means an exhaust system component which limits the size of carbon particles expelled from a tailpipe.

(q) *Tandem all terrain vehicle* means a motorized off-highway vehicle designed to travel on four tires, having a seat designed to be straddled by the operator and handlebar for steering control, and a seating position behind the operator seat designed to be straddled by no more than one passenger.

(r) *Three-wheeled all terrain vehicle* means an all terrain vehicle as defined in paragraph (a) of this section that has three wheels.

(s) *Throttle control* means a control which is located on the handlebar and is used to control engine power.

(t) *VIN* means a Vehicle Identification Number assigned as specified in 49 CFR part 565.

(u) *Wheelbase (L)* means the longitudinal distance from the center of the front axle to the center of the rear axle.

(v) *Wheel travel* means the displacement of a reference point on the suspension (such as the wheel axle) from when the suspension is fully extended (no force applied) to when it is fully compressed.

§ 1410.3 Requirements in general.

(a) Each ATV designed for use only by a single rider, shall meet the equipment, configuration and performance requirements specified in subpart B of this part. Each ATV designed for two riders shall meet the equipment, configuration and performance requirements specified in subpart D of this part. All ATVs shall meet the requirements for labeling, point of sale information, instruction manuals, and instructional training specified in subpart C of this part and the recordkeeping and certification requirements specified in subpart E of this part.

(b) Each ATV manufacturer shall comply with the requirements of this part applicable to manufacturers. For purposes of this part, an ATV importer is an ATV manufacturer.

(c) Each ATV retailer shall comply with the requirements of this part applicable to retailers.

(d) In accordance with 16 CFR part 1307, any three-wheeled all terrain vehicle as defined in § 1410.2(r) which is manufactured or imported on or after [180 days after final rule is issued] is a banned hazardous product.

§ 1410.4 Findings.

(a) *General.* In order to issue a consumer product safety standard under the Consumer Product Safety Act, the Commission must make certain findings and include them in the rule. 15 U.S.C. 2058(f)(3). These findings are discussed in this section.

(b) *Degree and nature of the risk of injury.* According to the Commission's 2004 Annual Report on ATVs, the Commission has reports of 6,494 ATV-related deaths that have occurred since 1982. For 2003 alone, an estimated 740 ATV-related deaths were reported to the Commission. The estimated number of ATV-related injuries treated in hospital emergency rooms in 2004 was 136,100, which is an increase of about 8 percent over the 2003 estimate. These incidents occur when the operator of an ATV loses control of the vehicle, collides with another object, or otherwise becomes injured or dies while riding an ATV. Many incidents are related to behavior of the operator (such as riding on paved roads, carrying a passenger, driving at excessive speeds).

(c) *Number of consumer products subject to the rule.* The market has increased substantially since ATVs were first introduced over thirty years ago. In 2005, an estimated 6.9 million ATVs were in use.

(d) *The need of the public for ATVs and the effects of the rule on their utility, cost and availability.* The need of the public for ATVs is both for recreation and for work, particularly on farms and ranches in rural areas. The proposed rule will have minimal effect on the utility, cost and availability of ATVs. The mechanical provisions of the proposed rule are substantially similar to requirements of the voluntary

standard with which the major ATV manufacturers comply. Costs should be small because the information provisions of the proposed rule are also currently being followed by the major ATV manufacturers. With the exception of the ban of three-wheeled ATVs, the proposed rule should not affect the availability of ATVs. In fact, a greater variety of youth ATVs may become more available.

(e) *Other means to achieve the objective of the rule while minimizing the impact on competition and manufacturing.* Because most ATV manufacturers are currently complying with the ANSI/SVIA–1–2001 voluntary standard and are providing the information materials the proposed rule requires, the Commission does not believe that the proposed rule will have much effect on competition and manufacturing. It is likely, however, that newer entrants may need to take action to bring their ATVs into compliance with the proposed rule. This could have the effect of increasing the price for the newer entrants'' imported ATVs. In the future, this could reduce the number of new entrants coming into the ATV market.

(f) *Unreasonable risk.* As noted in paragraph (b) of this section, the Commission has reports of 6,494 ATV-related deaths that have occurred since 1982, and an estimated 740 ATV-related deaths were reported to the Commission for 2003 alone. The proposed rules will establish mechanical standards for ATVs and requirements for the provision of safety information about operating ATVs. Included in this will be a requirement for manufacturers to provide free training. Many ATV manufacturers are currently in compliance with many of the proposed requirements. However, some of the additional requirements (such as requiring the age acknowledgment form and training acknowledgment form) or requirements that are somewhat different from current practice (such as clearer warning statements) may better inform consumers of ATV-related risks who may then be better able to reduce or avoid these risks. Moreover, the mandatory requirements will cover the increasing number of new entrants into the ATV market who are not following current voluntary standards or other safety practices that the major manufacturers are voluntarily following. This will reduce the risk of injury in the future as more such new entrants may enter the market.

(g) *Public interest.* These rules are in the public interest because they may reduce ATV-related deaths and injuries in the future. Their mandatory nature will mean that all ATV manufacturers will have to comply with the mechanical and information requirements of the rules. The increasing number of new entrants will make it difficult to maintain voluntary agreements with manufacturers. By issuing mandatory requirements, the Commission will have the authority to enforce these requirements rather than relying on voluntary compliance.

(h) *Voluntary standards.* The current voluntary standard, ANSI/SVIA–1–2001, specifies requirements for the mechanical operation of single rider ATVs (both for adult and youth ATVs). Manufacturers will be working to incorporate requirements for tandem ATVs into the voluntary standard. The major manufacturers appear to comply with most provisions of the voluntary standard. The voluntary standard does not contain information requirements for such things as warning labels, owners manuals and training. Thus, compliance with the voluntary standard alone would not be adequate to eliminate the risk of injury. Many ATV incidents occur because of the way the ATV is used. The Commission cannot issue requirements for how a product should be used (e.g., requiring helmets, prohibiting children from riding adult ATVs). To affect these behaviors the Commission must act through requirements directing manufacturers and retailers to take actions that inform consumers of the risks associated with ATVs and advise consumers how they could reduce these risks. Although the major manufacturers have agreed to take many of the informational actions proposed in the rules through the Letters of Undertaking (''LOUs'') that they have entered into with the Commission, the LOUs are completely voluntary, and a company could decide to change any of the actions it has agreed to at any time. Although the major manufacturers appear to be complying with the voluntary standard and abiding by their LOUs, a growing portion of the ATV market may not be following the voluntary standard (and is not bound by the LOUs). These new entrants now comprise approximately 10 percent of the market. Given recent trends and the lower price of the new entrants'' products, their share of the market is likely to increase. Thus, the Commission finds that compliance with the ANSI/SVIA–1–2001 voluntary standard is not likely to eliminate or adequately reduce the risk of injury associated with ATVs, and it is unlikely that there will be substantial compliance with the voluntary standard.

(i) *Relationship of benefits to costs.* Because most manufacturers are currently taking most of the actions that the proposed rules would require, costs from the proposed rules are likely to be small. The initial potential reduction of ATV-related deaths and injuries may also be small. However, mandating the mechanical and information requirements will mean that new entrants to the market, a group that has recently been increasing, will have to comply with the requirements as well. The proposed rule would impose some testing and recordkeeping costs. The staff estimates these to be about $462,000 annually. For many of the provisions, it is difficult to quantify benefits. However, for the training requirement alone, the Commission estimates the proposed provision could result in a net benefit of about $3.3 million annually. Given that in 2004 an estimated 136,000 ATV-related injuries were treated in hospital emergency rooms, and that an estimated 6,494 ATV-related deaths have occurred since 1982, if the proposed rule affects even a small number of potential deaths and injuries, the benefits would bear a reasonable relationship to the costs.

(j) *Least burdensome requirement.* The proposed rule is likely to impose only a small burden on ATV manufacturers and retailers. The Commission is essentially mandating the current practice that many manufacturers are following. Nevertheless, the proposed rule is likely to reduce the risk of injury associated with ATVs because it will enable the Commission to directly enforce the provisions of the rule and will bring new entrants under federal regulation.

Subpart B—Requirements for Equipment, Configuration and Performance for Single Rider ATVs

§ 1410.5 Equipment and configuration requirements.

(a) *Service brakes.* All ATVs shall have either independently-operated front and rear brakes, or front and rear brakes that are operated by a single control, or both. These brakes shall meet the requirements of § 1410.7.

(b) *Parking brake.* All ATVs shall have a parking brake capable of holding the ATV stationary under prescribed conditions. The parking brake shall meet the performance requirements of § 1410.8.

(c) *Mechanical suspension.* All ATVs shall have mechanical suspension for all wheels. Each wheel shall have a minimum wheel travel of 50 mm (2 inches). Springing and damping

properties shall be provided by components other than the tire.

(d) *Engine stop switch.* All ATVs shall have an engine stop switch which is operable by the thumb without removing the hand from the handlebar. The engine stop switch shall not require the operator to hold it in the off position to stop the engine.

(e) *Manual clutch control.* All ATVs equipped with a manual clutch shall have a clutch lever which is operable without removing the hand from the handlebar.

(f) *Throttle control.* All ATVs shall be equipped with a means of controlling engine power through a throttle control. The throttle control shall be operable without removing the hand from the handlebar. The throttle control shall be self-closing to an idle position upon release of the operator's hand from the control.

(g) *Drivetrain controls.* (1) Manual transmission gearshift control. All ATVs equipped with a manual transmission gearshift control shall have the control located so that it is operable by the operator's left foot or left hand.

(i) *Operation of a foot gearshift control.* If equipped with a foot gearshift control, an upward motion of the operator's toe shall shift the transmission toward higher (lower numerical gear ratio) gears, and a downward motion toward lower gears. If equipped with a heel-toe (rocker) shifter, an upward motion of the toe or a downward motion of the heel shall shift the transmission toward higher gears and a downward motion of the toe toward lower gears.

(ii) *Operation of a hand gearshift control.* If equipped with a hand gearshift control, moving a control upward or depressing the upper portion of the control shall shift the transmission toward higher (lower numerical gear ratio) gears, and moving the control downward or depressing the lower portion of the control shall shift the transmission toward lower gears.

(iii) *Gear selection.* If three or more gears are provided, it shall not be possible to shift from the highest gear directly to the lowest gear, or vice versa.

(2) *Directional/Range controls.* Controls for selecting forward, neutral, or reverse or for selecting overall transmission ranges, or for selecting the differential drive (2-wheel or 4-wheel) shall have a defined shift pattern viewable by the operator.

(3) *Neutral indicator.* All ATVs with a neutral position shall have either a neutral indicator readily visible to the operator when seated on the ATV or a means to prevent starting of the ATV unless the transmission is in the neutral position. The indicator, if provided, shall be activated whenever the ignition system is on and the transmission is in neutral.

(4) *Reverse indicator.* All ATVs with a reverse position shall have a reverse indicator readily visible to the operator when the operator is seated on the ATV. The indicator shall be activated whenever the engine is running and the transmission is in reverse.

(5) *Electric start interlock.* An interlock shall be provided to prevent the ATV engine from being started by electric cranking unless the transmission is in neutral or park, or the brake is applied.

(h) All ATVs shall have a means for allowing the presence of the ATV to be visible during daylight hours over an obstacle with a height of six (6) feet located directly adjacent to the ATV.

(i) *Manual fuel shutoff control.* If an ATV is equipped with a manual fuel shutoff control, the device shall be operable as prescribed in 49 CFR 571.123, Table 1.

(j) *Handlebars.* The handlebar and its mounting shall present no rigid materials with an edge radius of less than 3.2 mm (0.125 inch) that may be contacted by a probe in the form of a 165 mm (6.5 inch) diameter sphere. The probe shall be introduced to the handlebar mounting area. It shall not be possible to touch any part of any edge that has a radius of less than 3.2 mm (0.125 inch) with any part of the probe. A handlebar crossbar, if provided, shall be equipped to minimize contact injuries.

(k) *Operator foot environment.* All ATVs shall have a structure or other design feature which meets the requirements of paragraphs (k)(1) through (4) of this section.

(1) *Test procedure.* Compliance shall be determined by introduction of a probe, whose end is a rigid flat plane surface 75 mm (3 inches) in diameter, in the prescribed direction to the zones as described in paragraphs (k)(2) and (3) of this section and as shown in Figures 1 and 2 of this part, or in the case of a tandem ATV, Figures 5 and 6 of this part.

(i) *Inserting probe vertically and downward.* The probe shall be introduced end-first in a vertical and downward direction to the zone described in paragraph (k)(2) of this section and shown by the shaded portion of Figure 1 of this part, or in the case of a tandem ATV, the shaded portion of Figure 5. The end of the probe in its entirety shall remain within the limits of the zone. It shall not penetrate the zone sufficiently to touch the ground when applied with a force of 445 N (100 lbf).

(ii) *Inserting probe horizontally and rearward.* The probe shall be introduced end-first in a horizontal and rearward direction to the zone described in paragraph (k)(3) of this section and shown by the shaded portion of Figure 2 of this part, or in the case of a tandem ATV, the shaded portion of Figure 6 of this part. The end of the probe in its entirety shall remain within the limits of the zone. It shall not penetrate the zone sufficiently to touch the rear tire when applied with a force of 90 N (20 lbf).

(2) *Boundaries of zone in Figure 1 of this part.* The zone shown in Figure 1 of this part, or in the case of a tandem ATV, Figure 5 of this part, is defined as bounded by:

(i) The vertical projection of the rear edge of the footrest.

(ii) The vertical plane (line AA) parallel to the ATV's longitudinal plane of symmetry that passes through the inside edge of the footrest.

(iii) The vertical projection of the intersection of a horizontal plane passing through the top surface of the footrest and the rear fender or other structure.

(iv) The vertical plane passing through point D and tangent to the outer front surface of the rear tire.

(A) For footpegs point D is defined as the intersection of the lateral projection of the rearmost point of the footpeg and the longitudinal projection of the outermost point of the footpeg.

(B) For footboards point D is defined as the intersection of 2 lines. The first is a line perpendicular to the vehicle longitudinal plane of symmetry and one-third of the distance from the front edge of the rear tire to the rear edge of the front tire. The second is a line parallel to the ATV's longitudinal plane of symmetry and one-half the distance between the inside edge of the footboard and the outside surface of the rear tire.

(3) *Boundaries of zone in Figure 2 of this part.* The zone shown in Figure 2 of this part is defined as bounded by:

(i) The horizontal plane passing through the lowest surface of the footrest on which the operator's foot (boot) rests (plane F), or in the case of a tandem ATV, the passenger's foot (boot) rests (Plane G, Figure 6 of this part).

(ii) The vertical plane (line AA) parallel to the ATV's longitudinal plane of symmetry that passes through the inside edge of the footrest.

(iii) The horizontal plane 100 mm (4 inches) above plane F, or in the case of a tandem ATV, plane G, Figure 6 of this part.

(iv) The vertical plane (line BB) parallel to the ATV's longitudinal plane of symmetry and 50 mm (2 inches) inboard of the outer surface of the rear tire.

(4) *Requirements for ATVs with non-fixed structure.* All ATVs equipped with a non-fixed type (for example, foldable, removable or retractable) structure intended to meet the requirements of this paragraph (k) shall be equipped with one or more of the following:

(i) A warning device (for example, a buzzer or indicator) to indicate that the structure is not in the position needed to comply with the requirements of this paragraph (k).

(ii) A device to prevent the ATV from being operated under its own power if the structure is not in the position needed to comply with the requirements of this paragraph (k).

(iii) A structure that can be folded, retracted, or removed, such that when the structure is folded, retracted, or removed, the ATV cannot be operated using the footrest in the normal manner.

(l) Lighting equipment—(1) *Requirement.* All ATVs shall have at least one headlamp projecting a white light to the front of the ATV, at least one tail lamp projecting a red light to the rear, and at least one stop lamp or combination tail/stop lamp. The stop lamp shall be illuminated by the actuation of any service brake control.

(2) *Specifications.* Headlamps shall conform to Surface Vehicle Recommended Practice, *All Terrain Vehicle Headlamps*, SAE J1623 FEB94; and tail lamps shall conform to Surface Vehicle Standard, *Tail Lamps (Rear Position Lamps)* for *Use on Motor Vehicles Less than 2032 mm in Overall Width,* SAE J585 MAR00. Stop lamps shall conform to Surface Vehicle Standard, *Stop Lamps for Use on Motor Vehicles Less than 2032 mm in Overall Width,* SAE J586 MAR00 or Surface Vehicle Recommended Practice, *Snowmobile Stop Lamp*, SAE J278 MAY95.

(m) *Spark arrester.* All ATVs shall have a spark arrester of a type that is qualified according to the United States Department of Agriculture Forest Service Standard for Spark Arresters for Internal Combustion Engines, 5100–l c, September 1997 or, Surface Vehicle Recommended Practice, *Spark Arrester Test Procedure for Medium Size Engines*, SAE J350 JAN91.

(n) *Tire marking.* All ATV tires shall carry the following markings:

(1) *Inflation pressure.* Both tire sidewalls shall he marked with the operating pressure or the following statement, or an equivalent message: ''SEE VEHICLE LABEL OR OWNER'S MANUAL FOR OPERATING PRESSURE.'' The messages required by this paragraph shall be in capital letters not less than 4 mm (0.156 inch) in height.

(2) *Bead seating pressure.* Both tire sidewalls shall be marked with the following statement, or an equivalent message: ''Do Not Inflate Beyond **psi (**kPa) When Seating Bead.''

(3) *Other Markings.* Both tire sidewalls shall have the following information:

(i) The manufacturer's name or brand name.

(ii) On one tire sidewall, the three-digit week and year of manufacture in the form prescribed at 49 CFR 574.5(d), fourth grouping.

(iii) The size nomenclature of the tire (for example, AT $22 \times 10 - 9^{*}$) as standardized by the Tire and Rim Association, Inc. or the Japan Automobile Tire Manufacturers Association, Inc.

(iv) The word ''tubeless'' for a tubeless tire.

(v) The phrase ''Not For Highway Use'' or ''Not For Highway Service.''

(4) *Letter sizes.* The information required by paragraphs (n)(2) and (3) of this section shall be in letters or numerals no less than 2 mm (.078 inch) in height.

(o) *Tire pressure.* All ATVs shall be provided with a means to verify that the pressures within each tire are within the recommended range(s).

(p) *Security.* All ATVs shall have a means to deter unauthorized use of the ATV.

(q) *Vehicle Identification Number (VIN)* or *Product Identification Number (PIN).* Each ATV shall have prominently displayed on the ATV a unique VIN assigned by its manufacturer in accordance with 49 CFR Part 565 or a unique PIN in accordance with *Recreation Off-Road Vehicle Product Identification Numbering System*, SAE International Consortium Standard, ICS–1000, issued 2004–9. If the ATV has a VIN number, the characters in location 4 and 5 of the number shall be ''A'' and ''T'', respectively. The VIN or PIN label shall meet the durability requirements, including exposure conditions for outdoor use, of UL Standard for Safety for Marking and Labeling Systems, Underwriters Laboratories Standard UL 969, fourth edition, October 3, 1995.

§ 1410.6 Maximum speed capability test.

(a) *Test conditions.* Test conditions shall be as follows:

(1) ATV test weight shall be the unloaded ATV weight plus the vehicle load capacity (including test operator and instrumentation), with any added weight secured to the seat or cargo area(s) if so equipped.

(2) Tires shall be inflated to the pressures recommended by the ATV manufacturer for the vehicle's test weight.

(3) The test surface shall be clean, dry, smooth and level concrete, or equivalent.

(b) *Test procedure.* Measure the maximum speed capability of the ATV using a radar gun or equivalent method. The test operator shall accelerate the ATV until maximum speed is reached, and shall maintain maximum speed for at least 30.5 m (100 ft). Speed measurement shall be made when the ATV has reached a stabilized maximum speed. A maximum speed test shall consist of a minimum of two measurement test runs conducted over the same track, one each in opposite directions. If more than two measurement runs are made there shall be an equal number of runs in each direction. The maximum speed capability of the ATV shall be the arithmetic average of the measurements made. A reasonable number of preliminary runs may be made prior to conducting a recorded test.

§ 1410.7 Service brake performance test.

(a) *Test conditions.* Test conditions shall be as follows.

(1) The ATV shall be tested at the appropriate test weight prescribed in this paragraph (a)(1). The ATV test weight shall be the unloaded vehicle weight plus the vehicle load capacity (including test operator and instrumentation) with any added weight secured to the seat or cargo area(s) (if equipped).

(2) Tires shall be inflated to the pressures recommended by the ATV manufacturer for the vehicle test weight.

(3) Engine idle speed and ignition timing shall be set according to the manufacturer's recommendations.

(4) Ambient temperature shall be between 0°C (32°F) and 38°C (100° F).

(5) The test surface shall be clean, dry, smooth and level concrete, or equivalent.

(6) Any removable speed limiting devices shall be removed and any adjustable speed limiting devices shall be adjusted to provide the ATV's maximum speed capability.

(b) *Test procedure.* The test procedure shall be as follows:

(1) Measure the maximum speed capability of the ATV in accordance with § 1410.6. Determine the braking test speed (V). The braking test speed is the speed that is the multiple of 8 km/h (5 mph), which is 6 km/h (4 mph) to

13 km/h (8 mph) less than the maximum speed capability of the ATV.

(2) Burnish the front and rear brakes by making 200 stops from the braking test speed. Stops shall be made by applying front and rear service brakes simultaneously, and braking decelerations shall be from 1.96 m/s^2 to 4.90 m/s^2 (0.2 g to 0.5 g).

(3) After burnishing, adjust the brakes according to the manufacturer's recommendation.

(4) Make six stops from the braking test speed. Stops shall be made by applying the front and rear service brakes simultaneously, and braking decelerations shall be from 1.96 m/s^2 to 4.90 m/s^2 (0.2 g to 0.5 g).

(5) Make four stops from the braking test speed, applying the front and rear service brakes. Measure the speed immediately before the service brakes are applied. Appropriate markers or instrumentation shall be used which will accurately indicate the point of brake application. Measure the stopping distance (S).

(i) Hand lever brake actuation force shall be not less than 22 N (5 lbf) and not more than 133 N (30 lbf) and foot pedal brake actuation force shall be not less than 44 N (10 lbf) and not more than 222 N (50 lbf).

(ii) The point of initial application of lever force shall be 25 mm (1.0 in.) from the end of the brake lever. The direction of lever force application shall be perpendicular to the handle grip in the plane in which the brake lever rotates. The point of application of pedal force shall be the center of the foot contact pad of the brake pedal, and the direction of force application shall be perpendicular to the foot contact pad and in the plane in which the brake pedal rotates.

(c) *Performance requirements.* (1) For ATVs with maximum speed capability of 29 km/h (18 mph) or less, at least one of the four stops required by paragraph (b)(5) of this section shall comply with the relationship:

$S \leq V/5.28$

Where:

S = brake stopping distance (m)
V = braking test speed (km/hr)

$S \leq V$

Where:

S = brake stopping distance (ft)
V = braking test speed (mph)

(2) For ATVs with maximum speed capability of greater than 29 km/h (18 mph), at least one of the four stops required by paragraph (b)(5) of this section shall have an average braking deceleration of 5.88 m/s2 (0.6 g) or greater. Average braking deceleration can be determined according to the following formulae: [1]

$a = V^2/25.92S$

Where:

a = average deceleration (m/s2)
S = brake stopping distance (m)
V = braking test speed (km/h)

$a = [(.033) \times V^2]/S$

Where:

a = average deceleration (g)
S = brake stopping distance (ft)
V = braking test speed (mph)

§ 1410.8 Parking brake performance test.

(a) *Test conditions.* Test conditions shall be as follows:

(1) ATV test weight shall be the unloaded ATV weight plus weight secured to the seat or cargo area(s) (if equipped), which is equal to the manufacturer's stated vehicle load capacity.

(2) Tires shall be inflated to the pressures recommended by the ATV manufacturer for the vehicle test weight.

(3) The test surface shall be clean, dry, smooth concrete or equivalent, having a 30 percent grade.

(b) *Test procedure.* The test procedure shall be as follows:

(1) Burnish the service brakes according to the procedure specified in § 1410.7(b)(2) if service brakes are used as part of the parking brake.

(2) Adjust the parking brake according to the procedure recommended by the ATV manufacturer.

(3) Position the ATV facing downhill on the test surface, with the longitudinal axis of the ATV in the direction of the grade. Apply the parking brake and place the transmission in neutral and leave the ATV undisturbed for 5 minutes. Repeat the test with the ATV positioned facing uphill on the test surface.

(c) *Performance requirements.* When tested according to the procedure specified in paragraph (b) of this section, the parking brake shall be capable of holding the ATV stationary on the test surface, to the limit of traction of the tires on the braked wheels, for 5 minutes in both uphill and downhill directions.

§ 1410.9 Pitch stability requirements.

(a) *Test conditions.* Test conditions shall be as follows:

(1) The ATV shall be in standard condition, without accessories. The ATV and components shall be assembled and adjusted according to the manufacturer's instructions and specifications.

(2) Tires shall be inflated to the ATV manufacturer's recommended settings for normal operation. If more than one pressure is specified, the highest value shall be used.

(3) All fluids shall be full (oil, coolant, and the like), except that fuel shall be not less than three-fourths full. ATV shall be unladen, with no rider, cargo, or accessories.

(4) Steerable wheels shall be held in the straight ahead position.

(5) Adjustable suspension components shall be set to the values specified at the point of delivery to the dealer.

(6) Suspension components shall be fixed by means of a locking procedure such that they remain in the same position and displacement as when the unladen ATV is on level ground, and in the conditions specified in paragraphs (a)(1) through (5) of this section.

(b) *Test procedure.* The test procedure shall be as follows:

(1) Calculations based on vehicle metrics:

(i) Measure and record the wheelbase (L). The measurement of this length shall be done with an accuracy of ± 5 mm (± 0.2 inch) or ± 0.5%, whichever is greater.

(ii) Measure and record the front and rear weights, (W_f and W_r, respectively). W_f is the sum of the front tire loads; and W_r is the sum of the rear tire loads with the ATV level and in the condition specified in subsection (a) of this section. The measurements of these weights shall be done with an accuracy of ± 0.5 kg (± 1.1 lb) or ± 0.5%, whichever is greater.

(iii) Using the values obtained in paragraphs (b)(1)(i) and (ii) of this section, compute and record the quantity as follows: $L_1 = (W_f/(W_f + W_r)) \times L$.

(iv) Measure and record the vertical height between the rear axle center and the ground (R_r). This measurement shall be done on level ground, with the ATV in the conditions specified in subsection (a) of this section, with an accuracy of ± 3 mm (± 0.1 inch) or ± 1.5%, whichever is greater.

(v) Measure and record the balancing angle alpha. The procedure for obtaining this value is as follows: with the ATV on a level surface, the front of the vehicle shall be rotated upward about the rear axle without setting the rear parking brake or using stops of any kind, until the ATV is balanced on the rear tires. The balancing angle alpha through which the ATV is rotated shall be measured and recorded with an accuracy of ± 0.5 degrees. If an assembly protruding from the rear of the ATV, such as a carry bar or trailer hitch or hook, interferes with the ground surface, so as to not allow a balance to be

[1] Direct on-board instrumentation may be used to acquire any measurement data.

reached, the vehicle shall be placed on blocks of sufficient height to eliminate the interference.

(vi) Repeat the measurement in paragraph (b)(1)(v) of this section and determine if the two individual measurements are within 1.0 degree of each other. If they are not, repeat the measurements two more times and compute the average of the four individual measurements, and use that as the value.

(2) *Tilt table procedure.* The ATV shall be placed on a variable slope single-plane tilt table. The steerable wheels shall be straight forward. The ATV shall be positioned on the tilt table with its longitudinal center line perpendicular to the tilt axis of the table and its rear positioned downhill. The table shall be tilted until lift-off of the upper tire(s) occurs. Measure the angle at which lift-off of the upper wheel(s) occurs. Lift-off shall have occurred when a strip of 20-gauge steel [approximately 1 mm (.039 inch) thick], 76 mm (3 inch) minimum width, can be pulled from or moved under the second uphill tire to lift with a force of 9 N (2 lb) or less.

(c) *Performance requirements*—(1) *Computation from vehicle metrics.* Using the values obtained in paragraphs (b)(1)(iii), (b)(1)(iv), and (b)(1)(vi) of this section, compute the pitch stability coefficient as follows: $K_p = (L_1 \tan \text{alpha})/(L_1 + R_r \tan \text{alpha})$.

(2) *Computation from tilt table.* The pitch stability coefficient K_p is the tangent of the tilt table angle.

(3) *Requirement.* The pitch stability coefficient K_p calculated according to paragraph (c)(2) of this section shall be at least 1.0.

Subpart C—Requirements for Labeling, Point of Sale Information and Instruction

§ 1410.10 Labeling requirements.

(a) *General warning label.* (1) Each ATV shall have affixed to it a general warning label in English that meets the requirements of this section.

(2) *Content.* The general warning label shall display the safety alert symbol and the word ''WARNING'' in capital letters.

The label shall contain the following, or substantially equivalent, statements. They may be arranged on the label to place the prohibited actions together and the required actions together.

''THIS VEHICLE CAN BE HAZARDOUS TO OPERATE. A collision or rollover can occur quickly, even during routine maneuvers such as turning and driving on hills or over obstacles, if you fail to take proper precautions.''

''SEVERE INJURY OR DEATH can result if you do not follow these instructions:''

''BEFORE YOU OPERATE THIS ATV, READ THE OWNER'S MANUAL AND ALL LABELS.''

''NEVER OPERATE THIS ATV WITHOUT PROPER INSTRUCTION. Beginners should complete a training course.''

''NEVER CARRY A PASSENGER ON THIS ATV. You increase your risk of losing control if you carry a passenger.''

''NEVER OPERATE THIS ATV ON PAVED SURFACES. You increase your risk of losing control if you operate this ATV on pavement.''

''NEVER OPERATE THIS ATV ON PUBLIC ROADS. You can collide with another vehicle if you operate this ATV on a public road.''

''ALWAYS WEAR AN APPROVED MOTORCYCLE HELMET, eye protection, and protective clothing.''

''NEVER CONSUME ALCOHOL OR DRUGS before or while operating this ATV.''

''NEVER OPERATE THIS ATV AT EXCESSIVE SPEEDS. You increase your risk of lowing control if you operate this ATV at speeds too fast for the terrain, visibility conditions, or your experience.''

''NEVER ATTEMPT WHEELIES, JUMPS, OR OTHER STUNTS.''

(3) *Format.* The color scheme, typeface and formatting of the label shall be consistent with ANSI Z535.4 (American National Standard for Product Safety Signs and Labels (2002).

(4) *Location.* This label shall be affixed to the left front fender so it is easily visible in its entirety to the operator when seated on the vehicle in the proper operating position. If this location is not available for a particular ATV, the label shall be affixed to the right front fender so as to be easily read by the operator when seated in the ATV in the proper operating position.

(b) *Age recommendation warning label.* (1) Each ATV shall have affixed an age recommendation warning label in English that meets the requirements of this section.

(2) *Content.* The age recommendation warning label shall display the safety alert symbol and the word ''WARNING'' in capital letters. The label shall have a circle with a slash through it with the words ''under 16'' inside the circle. Below the circle, the label shall contain the following, or substantially equivalent, statements:

''Even youth with ATV experience have immature judgment and should never drive an adult ATV.

Letting children under the age of 16 operate this ATV increases their risk of severe injury or death.

NEVER let children under age 16 operate this ATV.''

(3) *Format.* The color scheme, typeface and formatting of the label shall be consistent with ANSI Z535.4 (2002).

(4) *Location.* This label shall be affixed to the fuel tank so it is visible in its entirety to the operator when seated on the vehicle in the proper operating position. If this location is not available for a particular ATV, or, if affixed at this location the label will not meet the durability requirement of paragraph (e) of this section, the label shall be placed on the front fender above the label required by paragraph (a) of this section so that it is visible in its entirety to the operator. If this location is not available for a particular ATV, the label shall be placed on the vehicle body immediately forward of the seat so it is visible in its entirety to the operator when seated on the vehicle in the proper operating position.

(c) *Passenger warning label.* (1) Each ATV shall have affixed a passenger warning label in English that meets the requirements of this section.

(2) *Content.* The passenger warning label shall display the safety alert symbol and the word ''WARNING'' in capital letters. The label shall contain the following, or substantially equivalent, statements:

''Passengers can affect ATV balance and steering. The resulting loss of control can cause SEVERE INJURY or DEATH.

NEVER ride on this ATV as a passenger.''

(3) *Format.* The color scheme, typeface and formatting of the label shall be consistent with ANSI Z535.4 (2002).

(4) *Location.* This label shall be affixed either to a flat surface of the vehicle body located to the rear of the seat and toward the center of the vehicle, or to the rear portion of the vehicle seat itself. If neither of these locations is available for a particular vehicle, the label shall be affixed to the left rear fender or the left side of the body so as to be easily seen by a potential passenger.

(d) *Tire pressure and overload warning label(s).* (1) Each ATV shall have affixed a label or labels in English that meet the requirements of this section warning against improper air pressure in the ATV's tires and against overloading. Manufacturers may affix one warning label addressing both hazards.

(2) *Content.* The label(s) shall contain the safety alert symbol and the signal word ''WARNING'' in capital letters. Every label warning about improper tire pressure shall contain a statement indicating the recommended tire pressure, either on the label or by reference to the owner's manual and/or the tires. Every label warning against overloading shall contain a statement indicating the maximum weight capacity for the ATV model.

(i) If a manufacturer uses separate tire pressure and overloading labels, the

label to warn of tire pressure shall contain the following, or substantially equivalent, statements:

—''Improper tire pressure can cause loss of control. Loss of control can result in severe injury or death.''

(ii) If a manufacturer uses separate tire pressure and overloading labels, the label to warn of overloading hazards shall contain the following, or substantially equivalent, statements:

—''Overloading can cause loss of control. Loss of control can result in severe injury or death.''

(iii) If a manufacturer uses one label for both tire pressure and overloading warnings, the label shall contain the following, or substantially equivalent, statements:

''Improper tire pressure or overloading can cause loss of control.
Loss of control can result in severe injury or death.''

(3) *Format.* The color scheme, typeface and formatting of the label shall be consistent with ANSI Z535.4 (2002).

(4) *Location.* The label(s) shall be affixed to the left rear fender above the axle, facing outward in such a position that it (they) can be read by the operator when mounting the vehicle.

(e) *Label durability requirements.* Each label required or permitted by this section shall meet the standards for durability in UL Standard for Safety for Marking and Labeling Systems, Underwriters Laboratories Standard UL 969, fourth edition, October 3, 1995.

(f) *Discretionary labels.* Hazard labels in addition to those specified in paragraphs (a) through (d) of this section may be affixed to the vehicle provided that:

(1) The discretionary labels are consistent with ANSI Z535.4 (2002); and

(2) Discretionary labels shall be affixed to ATVs in an appropriate location that does not detract from the mandatory labels required in paragraphs (a) through (d) of this section.

§ 1410.11 Hangtag requirements.

(a) Each ATV shall be equipped at the point of sale with a hang tag in English that, at a minimum, contains:

(1) The contents of the general warning label described in § 1410.10(a);

(2) The statement—''This hang tag is not to be removed before sale''—; and

(3) The statement—''Check with your dealer to find out about state or local laws regarding ATV operation.''

(b) Each hang tag shall be attached to the ATV in such a manner as to be conspicuous and removable only with deliberate effort.

(c) Each hang tag shall be at least 4 by 6 inches.

1410.12 Age acknowledgment.

(a) *General.* Prior to the sales transaction, the retailer shall provide the purchaser of each ATV with an age acknowledgment in the form shown in figure 3 of this part.

(b) *Signature.* Prior to the sales transaction, the retailer shall require that the purchaser of the ATV sign the age acknowledgment representing that the purchaser has read and understood the age acknowledgment.

(c) *Copies/retention.* The retailer shall provide the purchaser of the ATV and the manufacturer of the ATV with a copy of the signed age acknowledgment. The retailer shall retain the signed original of the age acknowledgment for a minimum of five (5) years after the date of the purchase of the ATV to which it pertains. The manufacturer shall retain the copy of the age acknowledgment for a minimum of five (5) years after the date of the purchase of the ATV to which it pertains.

§ 1410.13 Instructional/Owner's manual.

(a) *General.* (1) Each ATV shall be provided at the point of sale with an instructional/owner's manual that meets the requirements of this section. All ATVs shall be equipped with a means of carrying the manual that protects it from destructive elements while allowing reasonable access.

(2) Each manual shall be written in English and shall be written and designed in a manner reasonably calculated to convey information regarding safe operation and maintenance of the vehicle to persons who read such manual.

(3) Each manual shall be written in plain, simple language so as to be readily comprehended by the average seventh grader, as measured by a standard technique for assessing the readability of written materials.

(4) Information in each manual shall be presented in a meaningful sequence designed to permit readers to understand the information presented and appreciate its significance.

(5) Each manual shall be consistent with other safety messages required by this part, including those contained in warning labels, hang tags, and the safety video.

(6) Each manufacturer shall retain a copy of the manual for each model until five years after the model has ceased to be in production. The manufacturer shall make the manual available to CPSC upon request.

(b) *Contents.* Each manual shall contain—

(1) A statement on the outside front cover that, at a minimum, alerts the reader that the manual contains important safety information which should be read carefully.

(2) A statement on the outside front cover stating that the ATV is intended for operators 16 years of age or older.

(3) Definitions for ''warning'' and ''caution'' that are consistent with, or in any event not weaker than, the definitions for those terms contained in American National Standards Institute (ANSI) standard Z535–2002, along with an introductory statement alerting the reader to the significance of the safety alert symbol and the signal words.

(4) A reminder that the safety alert symbol with the word ''WARNING'' indicates a potential hazard that could result in serious injury or death. This reminder shall be repeated immediately preceding the table of contents, at the beginning and end of the section describing proper operating procedures, on the last page before the outside back cover (or on the inside back cover), and a total of at least five (5) more times, appropriately spaced, within sections containing warnings.

(5) An introductory safety message emphasizing the importance of reading and understanding the manual prior to operation of the ATV, the importance of and availability of the instructional training required by § 1410.15 of this part, and the importance of the age recommendation for the particular model. This introductory message shall contain, at a minimum, the following statement:

''Failure to follow the warnings contained in this manual can result in SERIOUS INJURY or DEATH''

(6) An introductory notice stating, at a minimum:

''This ATV is not intended for children. Children should only ride youth ATVs that are specifically intended for children under 16 years of age.''

(7) An introductory safety section which, at a minimum, contains the following safety messages in the form shown:

''AN ATV IS NOT A TOY AND CAN BE HAZARDOUS TO OPERATE. An ATV handles differently from other vehicles including motorcycles and cars. A collision or rollover can occur quickly, even during routine maneuvers such as turning and driving on hills or over obstacles, if you fail to take proper precautions.

SEVERE INJURY OR DEATH can result if you do not follow these instructions:

1. Read this manual and all labels carefully and follow the operating procedures described.

2. Never operate an ATV without proper instruction. *Take a training course.* Contact

an authorized ATV dealer to find out about the training courses near you.

3. Never allow a child under 16 to operate this ATV, which is not intended for operators under 16 years of age.

4. Never carry a passenger on this ATV.

5. Never operate an ATV on any paved surfaces, including sidewalks, driveways, parking lots and streets.

6. Never operate an ATV on any public street, road or highway, even a dirt or gravel one.

7. Never operate an ATV without wearing an approved helmet that fits properly. You should also wear eye protection (goggles or face shield), gloves, boots, long-sleeved shirt or jacket, and long pants.

8. Never consume alcohol or drugs before or while operating an ATV.

9. Never operate at excessive speeds. Always go at a speed that is proper for the terrain, visibility and operating conditions, and your experience.

10. Never attempt wheelies, jumps, or other stunts.

11. Always inspect your ATV each time you use it to make sure it is in safe operating condition. Always follow the inspection and maintenance procedures and schedules described in this manual.

12. Always keep both hands on the handlebars and both feet on the footpegs of the ATV during operation.

13. Always go slowly and be extra careful when operating on unfamiliar terrain. Always be alert to changing terrain conditions when operating the ATV.

14. Never operate on excessively rough, slippery or loose terrain until you have learned and practiced the skills necessary to control the ATV on such terrain. Always be especially cautious on these kinds of terrain.

15. Always follow proper procedures for turning as described in this manual. Practice turning at low speeds before attempting to turn at faster speeds. Do not turn at excessive speed.

16. Never operate the ATV on hills too steep for the ATV or for your abilities. Practice on smaller hills before attempting larger hills.

17. Always follow proper procedures for climbing hills as described in this manual. Check the terrain carefully before you start up any hill. Never climb hills with excessively slippery or loose surfaces. Shift your weight forward. Never open the throttle suddenly or make sudden gear changes. Never go over the top of any hill at high speed.

18. Always follow proper procedures for going down hills and for braking on hills as described in this manual. Check the terrain carefully before you start down any hill. Shift your weight backward. Never go down a hill at high speed. Avoid going down a hill at an angle that would cause the vehicle to lean sharply to one side. Go straight down the hill where possible.

19. Always follow proper procedures for crossing the side of a hill as described in this manual. Avoid hills with excessively slippery or loose surfaces. Shift your weight to the uphill side of the ATV. Never attempt to turn the ATV around on any hill until you have mastered the turning technique described in this manual on level ground. Avoid crossing the side of a steep hill if possible.

20. Always use proper procedures if you stall or roll backwards when climbing a hill. To avoid stalling, use proper gear and maintain a steady speed when climbing a hill. If you stall or roll backwards, follow the special procedure for braking described in this manual. Dismount on the uphill side or to a side if pointed straight uphill. Turn the ATV around and remount, following the procedure described in this manual.

21. Always check for obstacles before operating in a new area. Never attempt to operate over large obstacles, such as large rocks or fallen trees. Always follow proper procedures when operating over obstacles as described in this manual.

22. Always be careful when skidding or sliding. Learn to safely control skidding or sliding by practicing at low speeds and on level, smooth terrain. On extremely slippery surfaces, such as ice, go slowly and be very cautious in order to reduce the chance of skidding or sliding out of control.

23. Never operate an ATV in fast flowing water or in water deeper than that specified in this manual. Remember that wet brakes may have reduced stopping ability. Test your brakes after leaving water. If necessary, apply them several times to let friction dry the linings.

24. Always be sure there are no obstacles or people behind you when you operate in reverse. When it is safe to proceed in reverse, go slowly.

25. Always use the size and type tires specified in this manual. Always maintain proper tire pressure as described in this manual.

26. Never modify an ATV through improper installation or use of accessories.

27. Never exceed the stated load capacity for an ATV. Cargo should be properly distributed and securely attached. Reduce speed and follow instructions in the manual for carrying cargo or pulling a trailer. Allow greater distance for braking.

FOR MORE INFORMATION ABOUT ATV SAFETY, visit the CPSC website at *www.cpsc.gov* or call the Consumer Product Safety Commission at 1–800–638–2772, or [Insert contact number for manufacturer].''

(8) An appropriate table of contents identifying the major portions of the manual.

(9) Descriptions of the location of warning labels on the ATV and an introductory statement emphasizing the importance of understanding and following the labels and the importance of keeping the labels on the ATV. The introductory statement shall also contain instructions on how to obtain a replacement label in the event any label becomes difficult to read. These instructions shall include a toll-free telephone number that can be called to obtain a replacement label.

(10) A telephone number or email address for the owner of the ATV to contact the manufacturer to report safety issues and/or seek information on the proper, safe operation of the ATV.

(11) A description of pre-operating inspection procedures and a statement emphasizing the importance of these procedures.

(12) A description of proper operating procedures and of potential hazards associated with improper operation of the ATV. The section of each manual devoted to describing proper operating procedures shall include material addressing in narrative text form and in appropriate detail all of the topics addressed in paragraph (b)(7) of this section. Such narrative text shall identify particular potential hazards associated with the types of operation or behavior in question, the possible consequences of such operation or behavior, and shall describe the manner in which the vehicle should be properly operated to avoid or reduce the risk associated with such hazards. Such narrative text shall include warning statements and corresponding illustrations in conformance with the requirements of this section and § 1410.10 of this part. The language of the narrative sections accompanying each warning shall not contradict any information contained in the warning section and shall be written to draw attention to the warning.

(13) Descriptions of proper maintenance, storage, and transportation procedures.

(14) On the outside back cover, the contents of the general warning label required by § 1410.10(a).

(c) Where a manual describes a potential hazard that is not addressed in this section, but which nevertheless meets the definition of a potential hazard for which a ''warning'' or ''caution,'' as these terms are defined in ANSI Standard Z535.4–2002, is appropriate, the discussion of that potential hazard shall be accompanied by a ''warning'' or ''caution'' statement which conforms to the requirements of ANSI Standard Z535.4–2002 and this section.

§ 1410.14 Safety video.

(a) *General.* The retailer shall provide the purchaser with a safety video at or before the completion of the purchase transaction. The safety video shall be designed to communicate to an audience consisting of prospective purchasers and users, including children between the ages of 9 and 16, and their parents.

(b) *Title.* The title of the safety video shall indicate that the video provides safety information concerning ATV operation.

(c) *Content.* The safety video shall communicate the following:

(1) The contents of the hang tag described in § 1410.11;

(2) The concept that a person operating an ATV should know his or her limitations and not attempt to perform any maneuver or traverse any terrain if performing the maneuver or operating on the terrain is beyond that person's capabilities and experience;

(3) The importance of practicing and gradually progressing from basic to more complex maneuvers; and

(4) The importance of keeping alert at all times and the concept that even a brief distraction can lead to loss of control resulting in a severe or fatal accident.

(5) ATV-related death and injury statistics both for all riders and for children under the age of 16. The video may use rolling five-year averages, and the statistics only need to be updated if there is a statistically significant change in either the death or injury statistics. Such change shall be noted in the subsequent video.

(d) *Dramatization.* All dramatizations designed to communicate any of the concepts set forth in the preceding subsection shall be unambiguous. To avoid ambiguity and ensure clarity, dramatizations shall:

(1) In the case of dramatizations that show an accident occurring, averted, or about to occur, the video shall contain no intervening events that detract from communication of the hazard (for example, the presence of an obstacle on a paved surface when communicating the hazard of operating on a paved surface, or a person running in front of an ATV when communicating the hazard of carrying passengers); and

(2) In the case of dramatizations that show either the conduct, terrain, or maneuvers that a person should avoid, or the conduct that a person should observe, the video shall also unequivocally state the relevant safety message, either verbally by means of lines spoken by a screen character or narrator, in written form, or both.

(e) *Format.* The safety video shall be made available in at least one commonly used format, e.g., VHS or DVD, and the purchaser shall be given the option at no cost of procuring the safety video in at least one format other than the one originally supplied with the ATV at the time of purchase.

(f) *Retention.* The manufacturer shall retain a copy of the safety video until five years after the model to which the video applies ceases to be in production. The manufacturer shall make the video available to CPSC upon request.

1410.15 Instructional training.

(a) *General.* The manufacturer shall provide to the purchaser at no charge a training course for the purchaser and each member of the purchaser's immediate family who meets or exceeds the minimum age recommendation for the ATV in question. The training course shall be provided in the form of one certificate valid for the purchaser and each qualifying member of the purchaser's immediate family redeemable at no cost for attendance at a training course meeting the requirements of this section.

(b) *Form of certificate.* Each certificate shall identify the VIN or PIN number for the ATV to which it pertains and shall have no expiration date. In addition the certificate shall include a toll-free telephone number or other readily useable means for the purchaser to contact the training organization to arrange for training.

(c) *Retailer responsibility.* The retailer shall provide the certificate(s) to the purchaser at the time of purchase and shall obtain the purchaser's signature on the training acknowledgment form shown in Figure 4 of this part. The retailer shall retain the signed original of the training availability form and shall provide the purchaser and the manufacturer of the ATV with a copy.

(d) *Course content.* The training curriculum shall, at a minimum, address the following:

(1) The risks of ATV-related deaths and injuries (risk awareness).

(2) The role of safety equipment, including identifying suitable equipment, properly using equipment, and understanding why it is used.

(3) Rider responsibilities, including:

(i) Why children/youths should not ride adult ATVs;

(ii) Why all ATV users should take a hands-on safety training course;

(iii) Why one should never ride a youth ATV or non-tandem adult ATV with a passenger or as a passenger;

(iv) Why one should never drive an ATV on paved roads;

(v) Why one should always wear a helmet and other protective gear while on an ATV; and

(vi) Why one should never drive an ATV while under the influence of alcohol or drugs.

(4) Identifying displays and controls;

(5) Recognizing limitations, including inclines and rider abilities;

(6) Evaluating a variety of situations to predict proper course of action, including terrain obstacles and behavior of other riders;

(7) Demonstrating successful learning of riding skills, including:

(i) Starting and stopping;

(ii) Negotiating turns, including gradual, sharp, and quick turns, weaving, and evasive maneuvers;

(iii) Stopping in a turn;

(iv) Emergency braking while straight and while turning.

(v) Negotiating full track and partial track obstacles.

(vi) Negotiating hills, including ascending, descending, traversing, and emergency situations; and

(vii) Combining skills together in a non-predictable manner (i.e. trail ride or free riding period with instructor supervision and critique).

(e) *Course structure.* The course shall include classroom, field, and trail activities.

(f) *Course duration.* The course duration shall be sufficient to cover the topics noted in this section, allow for each student to individually master the riding skills addressed in the course at the level commensurate with the terrain at the location of the course, and allow for written and riding skills tests.

(g) *Course accessibility.* The course shall be provided within a reasonable time from the date of purchase of the ATV and a reasonable distance from the place of purchase of the ATV.

Subpart D—Requirements for Tandem ATVs

§ 1410.16 Requirements in general for tandem ATVs.

All tandem ATVs shall meet the requirements stated in Subpart B and Subpart C of this part except as specified differently in this subpart D.

§ 1410.17 Equipment and configuration requirements for tandem ATVs.

(a) *Passenger environment.* All tandem ATVs shall have a passenger backrest and handhold which meet the following requirements:

(1) *Passenger location and restraint.* The passenger seating area behind the operator area shall be equipped with a generally vertical cushioned passenger backrest at the back of the seating area that shall be capable of withstanding a 900 N (202 lb.) loading force applied horizontally toward the rear at a height above the seating area of at least 162 cm (8 inches), without failure or permanent deformation.

(2) *Passenger handholds.* Two handholds shall be provided and be located on each side of the passenger seating area in a symmetrical manner. These handholds must be able to withstand, without failure or permanent deformation, a vertical force of 1000 N (224 lb.) applied statically to the center of the surface of the handhold. Handholds shall allow the passenger to

dismount without interference from the handholds.

(b) *Operator and Passenger foot environment.* All two-person ATVs shall have a foot support structure covered by footboards and distinct foot pegs for the operator and the passenger respectively. The minimum projected horizontal distance between the foot pegs shall be 230mm (9 inches) as measured on a line parallel to the longitudinal axis of the vehicle. When normally positioned on the foot pegs, the operator and passenger foot print must not overlap as projected on a horizontal plane and the passenger footprint must be contained in the projected footboard area. The operator and passenger foot environment shall meet the requirements in § 1410.5(k)(1) through (3). See Figures 5 and 6 of this part.

(c) *Mechanical suspension.* All tandem ATVs shall have mechanical suspension for all wheels in addition to what is provided by the tires. Each wheel shall have a minimum travel of 102 mm (4 inches).

(d) *Lighting equipment.* Tandem ATVs that are wider than 1500 mm shall have at least two headlights and two tail lamps.

§ 1410.18 Pitch stability requirements for tandem ATVs.

(a) *Test conditions.* Test conditions shall be as follows:

(1) The ATV shall be in standard condition, without accessories. The ATV and components shall be assembled and adjusted according to the manufacturer's instructions and specifications.

(2) Tires shall be inflated to the tandem ATV manufacturer's highest recommended pressure.

(3) All fluids shall be full (oil, coolant, and the like), except that fuel shall be not less than three-fourths full. ATV shall be unladen, with no rider, passenger, cargo, or accessories except as noted per the following conditions.

(4) Steerable wheels shall be held in the straight ahead position.

(5) Adjustable suspension components shall be set to the highest values recommended by the manufacturer.

(6) A weight of 91 kg ± 3 (200 lb ± 7) shall be securely fastened to the passenger seat to simulate a passenger. The center of gravity of the weight shall be 15 cm ± 2 (6 inches ± 1) above the passenger supporting surface and 25 cm ± 2 (10 inches ± 1) forward of the front surface of the back rest. The back rest shall be adjusted to its most rearward position.

(7) A weight of 91 kg ± 3 (200 lb ± 7) shall be securely fastened to the operation seat to simulate an operator. The center of gravity of the weight shall be 15 cm ± 2 (6 inches ± 1) above the operator supporting surface and either 30 cm ± 2 (12 inches ± 1) ahead of the passenger center of gravity.

(8) The area under the tires on the table may be covered with ¾″ No. 1 diamond shaped steel expanded metal grid (or plate) or similar material to engage tire tread and prevent tire sliding.

(b) *Test procedure.* The tandem ATV shall be placed on a variable slope single-plane tilt table. The steerable wheels shall be straight forward. The ATV shall be positioned on the tilt table with its longitudinal center line perpendicular to the tilt axis of the table and its rear positioned downhill. The table shall be tilted until lift-off of the upper wheels(s) occurs. Measure the angle at which lift-off of the upper wheel(s) occurs. Lift-off shall have occurred when a strip of 20-gauge steel [approximately 1 mm (.039 inch) thick], 76 mm (3 inch) minimum width, can be pulled from or moved under the second uphill tire to lift with a force of 9 N (2 lb) or less.

(c) *Performance requirements.* The angle of the tilt table with the tandem ATV positioned as described in 9.2.2 shall reach a minimum of 36 degrees (73% slope) before lift-off occurs.

§ 1410.19 Information requirements for tandem ATVs.

Each tandem ATV shall meet the requirements of subpart C of this part, with the following exceptions.

(a) *Labeling*—(1) *General warning label.* The general warning label required by § 1410.10(a) shall omit the statement ''NEVER CARRY A PASSENGER. You increase your risk of losing control if you carry a passenger.''

(2) *Passenger warning label.* (i) *Content.* Instead of the warning statement specified in § 1410.10(c), the passenger warning label shall state ''NEVER CARRY MORE THAN 1 PASSENGER'' in capital letters and shall recommend the following hazard-avoidance behaviors:

1. Never carry a passenger less than twelve (12) years old or twelve years old or older who is too small to firmly plant his/her feet on the footrests and to securely grab the handles;
2. Never allow a passenger to sit in a location other than the passenger seat;
3. Never carry a passenger who is not securely grasping the grip handles at all times.

(ii) *Location.* The passenger warning label shall be affixed to the front fender of each tandem ATV so it is adjacent to the general warning label and can be easily read by the operator when seated on the ATV in the proper operating position.

(b) *Hangtags.* The hangtag stating the contents of the general warning label shall meet the requirements of § 1410.11.

(c) *Instructional/owner's manuals.* Instead of instructing that operators should never carry passengers on ATVs, instructional/owner's manuals shall contain the following, or substantially equivalent statement:

''NEVER CARRY MORE THAN ONE PASSENGER. This ATV has been designed specifically to carry one passenger.''

Subpart E—Certification/Testing/Recordkeeping

§ 1410.20 Certification.

(a) At the location of the VIN or PIN number, the following statement shall be made: ''The manufacturer certifies that this ATV complies with all applicable requirements of 16 C.F.R. Part 1410.''

(b) The VIN number or PIN number and the compliance statement shall meet the durability requirements of UL Standard for Safety for Marking and Labeling Systems, Underwriters Laboratories Standard UL 969, fourth edition, October 3, 1995.

§ 1410.21 Testing.

Each manufacturer of ATVs subject to this part shall perform or cause to be performed testing sufficient to demonstrate on an objectively reasonable basis that each ATV produced by that manufacturer meets the performance requirements of §§ 1410.5 through 1410.9 of this part for single rider ATVs and §§ 1410.16 through 1410.18 of this part for tandem ATVs.

§ 1410.22 Recordkeeping.

(a) *Manufacturer requirements.* Each manufacturer (the importer is considered a manufacturer for purposes of this part) of ATVs subject to this part shall:

(1) Maintain records in English sufficient to demonstrate on an objectively reasonable basis that each ATV produced by that manufacturer complies with the requirements of this part;

(2) Retain records required by this part for a period of at least five (5) years after production of the model of ATV to which the records pertain ceases;

(3) Maintain records required by this part at a location in the United States; and

(4) Make records required by this part available for inspection at the request of

a duly authorized representative of the U.S. Consumer Product Safety Commission.

(b) *Retailer requirements.* Each retailer of ATVs subject to this part shall:

(1) Maintain the original of each age acknowledgment required by § 1410.12 of this part and each acknowledgment of training availability required by § 1410.15 of this part for a period of at least five (5) years after the date of purchase of the ATV to which the acknowledgments pertain;

(2) Maintain records required by this section at a location in the United States; and

(3) Make records required by this section available for inspection at the request of a properly authorized representative of the U.S. Consumer Product Safety Commission.

BILLING CODE 6355–01–P

Figure 1 to Part 1410

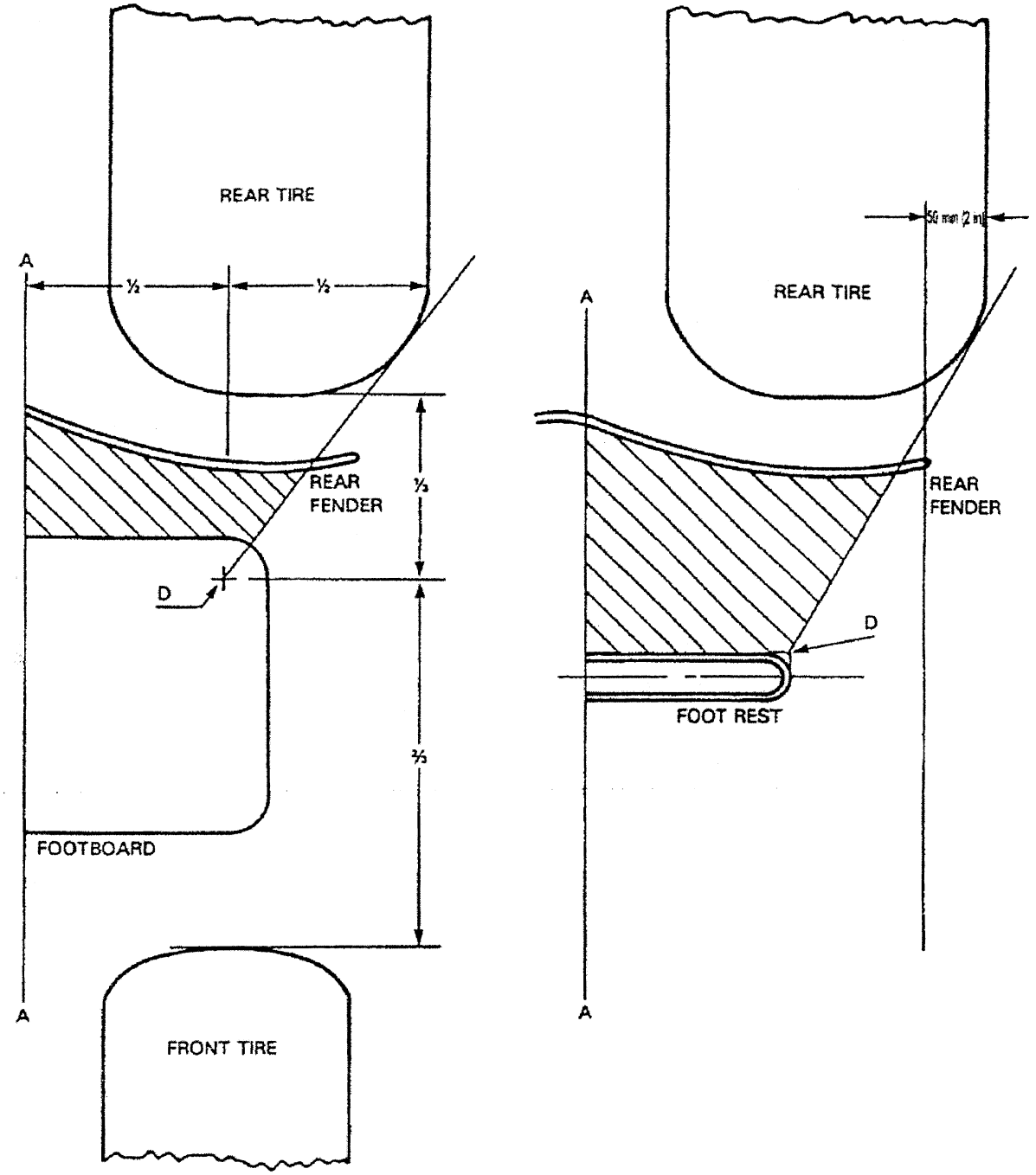

Figure 1
Operator Foot Environment - Plan View

Figure 2 to Part 1410

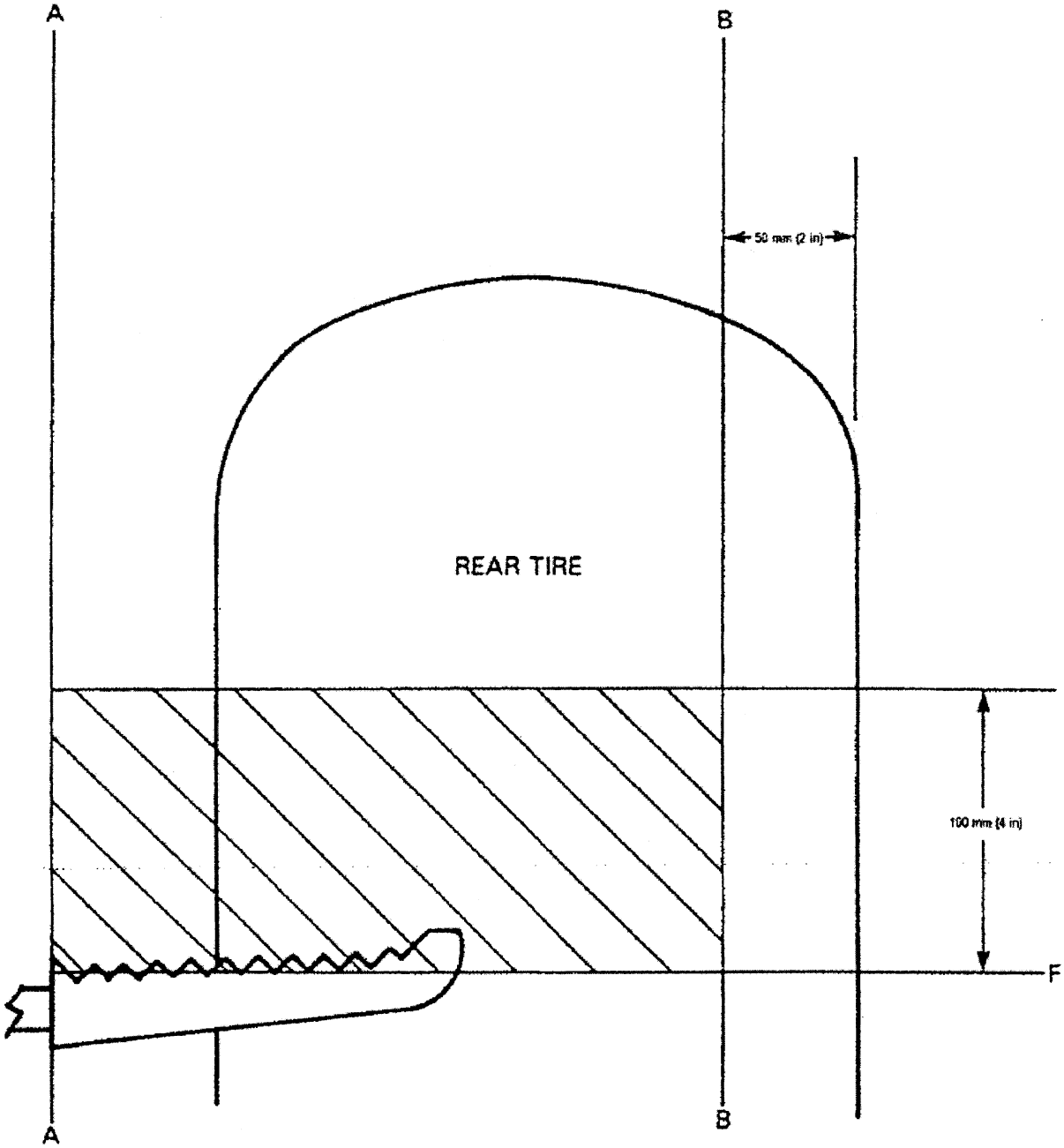

Figure 2
Operator Foot Environment - Front View

Figure 3 to Part 1410

The ATV you are considering is for adult drivers ONLY.

Adult ATVs can reach highway speeds and are inappropriate for anyone under 16. Even children with ATV-driving experience have immature judgment and should never drive an adult ATV.

Compared to an adult, a child younger than 16 who drives an adult ATV is more than **[to be added]** times as likely to die or to be injured.

In **each** year since 2001:

- More than [**to be added**] children younger than 16 died while riding an ATV.
- More than [**to be added**] children younger than 16 were treated in emergency rooms for ATV-related injuries.

Most of these deaths and injuries involved a child riding an adult ATV. Youth ATVs are available and are designed specifically for drivers under 16.

I have read the information above and understand that the ATV I am about to buy is for adults only. I also understand that youth ATVs are available for children under 16.

_____

Purchaser Signature Date (mm/dd/yyyy)

_____

Full name (please print)

TO BE COMPLETED BY DEALER

This form must be kept on file for 5 years and may be periodically reviewed by officials of the U.S. Consumer Product Safety Commission to ensure that ATV purchasers have been given this information.

_____

Vehicle VIN/PIN

Figure 3
Age Acknowledgment Form

Figure 4 to Part 1410

ATV Training

ATVs are complex motor vehicles requiring skill to drive, and new ATV drivers[1] have the highest risk of injury. ATVs don't handle as you might expect - they don't behave like a dirt bike, motorcycle, or car.

The best way to become familiar with your ATV and learn about its special handling is to take an ATV training class.

FREE ATV training is available for you and your household when you purchase an ATV.

You wouldn't drive a car without having someone show you how to handle it. Come to a training class and learn how to drive your ATV!

I have read the information above and have been given a certificate that is good for one free training course for me and each member of my immediate household whom the ATV is age-appropriate.

_____

Purchaser Signature Date (mm/dd/yyyy)

_____

Full name (please print)

TO BE COMPLETED BY DEALER

This form must be kept on file for 5 years and may be periodically reviewed by officials of the U.S. Consumer Product Safety Commission to ensure that ATV purchasers have been given this information.

_____

Vehicle VIN/PIN

[1] Those with less than one year of experience compared to those with multiple years of experience.

Figure 4 Training Acknowledgment Form

Figure 5 Part 1410

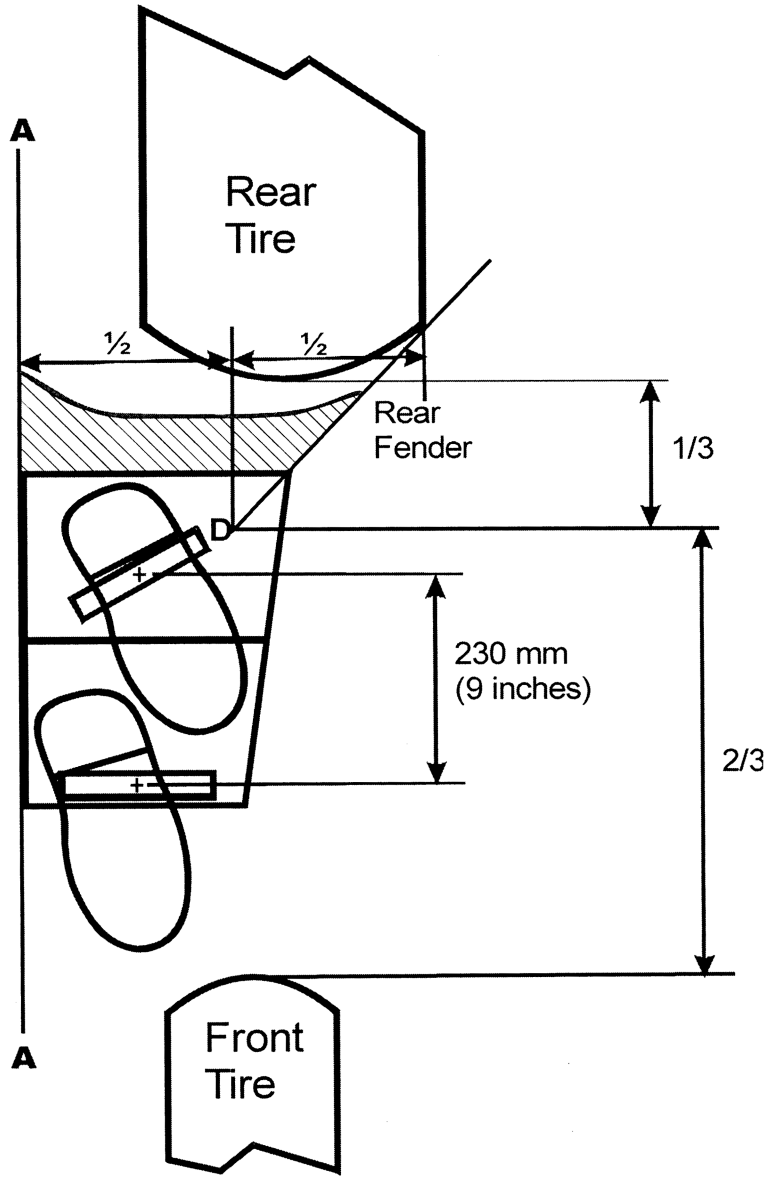

Figure 5
Operator and Passenger Foot Environment
Plan View

Figure 6 Part 1410

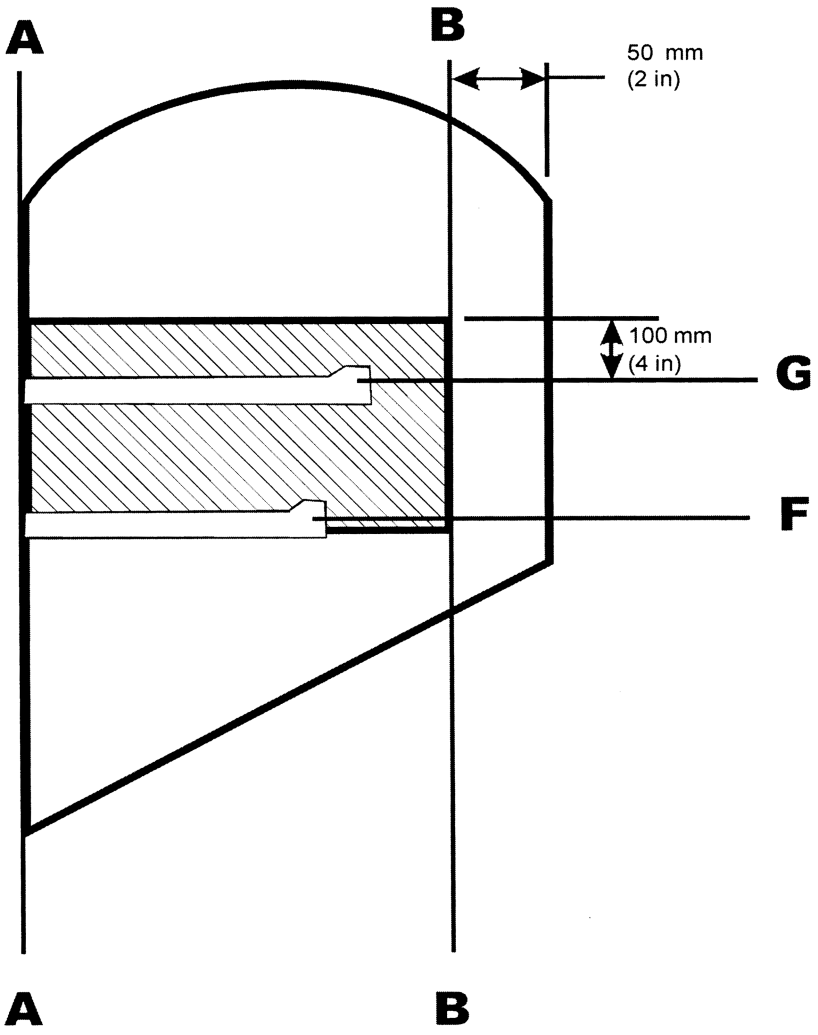

Figure 6
Operator and Passenger Foot Environment
Front View

BILLING CODE 6355–01–C

PART 1500—HAZARDOUS SUBSTANCES AND ARTICLES; ADMINISTRATION AND ENFORCEMENT REGULATIONS

3. The authority for part 1500 continues to read as follows:

Authority: 15 U.S.C. 1261–1278.

4. Section 1500.18 is amended to add a new paragraph (a)(20) to read as follows:

§ 1500.18 Banned toys and other banned articles intended for use by children.

(a) * * *

(20)(i) Any three-wheeled youth all terrain vehicle, as defined in § 1515.2(a) that is manufactured or imported on or after [180 days after issuance of final rule] and

(ii) Any youth all terrain vehicle, as defined in § 1515.2(a), that is manufactured or imported on or after [180 days after issuance of final rule] and that does not meet the requirements of Part 1515.

(iii) (A) *Findings.* In order for the Commission to issue a rule under section 2(q)(1) of the FHSA classifying a substance or article as a banned hazardous substance, the Commission must make certain findings and include these findings in the regulation. 15 U.S.C. 1262(i)(2). These findings are discussed in paragraphs (a)(20)(iii)(B) through (D) of this section.

(B) *Voluntary standards.* The current voluntary standard, ANSI/SVIA–1–2001, specifies requirements for the mechanical operation of single rider ATVs (both for adult and youth ATVs). The major manufacturers appear to comply with most provisions of the voluntary standard. However, the voluntary standard does not contain information requirements for such things as warning labels, owners manuals and training. Thus, compliance with the voluntary standard alone would not be adequate to eliminate the risk of injury. Many ATV incidents occur because of the way the ATV is used, and the Commission cannot issue requirements for how a product should be used (e.g., requiring helmets, prohibiting children from riding adult ATVs). To affect these behaviors the Commission must act through requirements directing manufacturers and retailers to take actions that inform consumers of the risks associated with ATVs and advise consumers how they could reduce these risks. Although the major manufacturers have agreed to take many of the informational actions proposed in the rules through agreements with the Commission, these are completely voluntary. A company could decide to change any of the actions it has agreed to at any time. Moreover, new market entrants, a growing portion of the ATV market, may not be following the voluntary standard (and they do not have individual agreements with the Commission). These new entrants now comprise approximately 10 percent of the market and their share of the market is likely to increase. Thus, the Commission finds that compliance with the ANSI/SVIA–1–2001 voluntary standard is not likely to eliminate or adequately reduce the risk of injury associated with youth ATVs, and it is unlikely that there will be substantial compliance with the voluntary standard.

(C) *Relationship of benefits to costs.* Because most manufacturers are currently taking most of the actions that the proposed rules would require, costs from the proposed rules are likely to be small. The initial potential reduction of ATV-related deaths and injuries may also be small. However, mandating the mechanical and information requirements will mean that new entrants to the market will have to comply with the requirements as well. The proposed rule would impose some testing and recordkeeping costs. The staff estimates these to be about $462,000 annually. The Commission proposes to establish categories of youth ATVs based on maximum speed rather than engine size. This should not impose additional costs on manufacturers because these delineations are similar to those already in the ANSI/SVIA–1–2001 voluntary standard. However, this change could lead to a greater variety of youth ATVs which could result in more children riding youth ATVs rather than larger, riskier adult models. Such a shift of children to youth ATVs could reduce ATV-related deaths and injuries because the risk of injury for riders under the age of 16 driving adult ATVs is about twice the risk of injury of those who are driving age-appropriate ATVs. Additionally, the proposed change could result in more children receiving formal training, and this too could reduce deaths and injuries.

(D) *Least burdensome requirement.* The proposed rule is likely to impose only a small burden on ATV manufacturers and retailers. The Commission is essentially mandating the current practice that many manufacturers are following. Nevertheless, the proposed rule is likely to reduce the risk of injury associated with ATVs because it will enable the Commission to directly enforce the provisions of the rule and will bring new entrants under federal regulation.

* * * * *

5. Add part 1515 to Subchapter C to read as follows:

PART 1515—REQUIREMENTS FOR YOUTH ALL TERRAIN VEHICLES

Subpart A—General Requirements

Sec.
1515.1 Purpose, scope, effective date.
1515.2 Definitions.
1515.3 Requirements in general.

Subpart B—Requirements for Equipment, Configuration and Performance

1515.4 Equipment and configuration requirements.
1515.5 Maximum speed capability test.
1515.6 Maximum speed capability requirements.
1515.7 Service brake performance test.
1515.8 Parking brake performance test.
1515.9 Pitch stability requirements.

Subpart C—Requirements for Labeling, Point of Sale Information and Instruction

1515.10 Labeling requirements.
1515.11 Hangtag requirements.
1515.12 Age acknowledgment.
1515.13 Instructional/owner's manual.
1515.14 Safety video.
1515.15 Instructional training.

Subpart D—Certification/Testing/Recordkeeping

1515.16 Certification.
1515.17 Testing.
1515.18 Recordkeeping.

Figures

Figure 1 to Part 1515—Operator Foot Environment—Plan View
Figure 2 to Part 1515—Operator Foot Environment—Front View
Figure 3 to Part 1515—Age Acknowledgment Form
Figure 4 to Part 1515—Training Acknowledgment Form

Authority: 15 U.S.C. 1261, 1262, and 1269.

Subpart A—General Requirements

§ 1515.1 Purpose, scope, effective date.

(a) *Purpose.* The purpose of the standard in this part is to reduce deaths and injuries associated with youth all terrain vehicles (ATVs) by ensuring that all youth ATVs meet certain technical requirements and that consumers have sufficient safety information about operating youth ATVs.

(b) *Scope and effective date.* Youth all terrain vehicles, as defined in § 1515.2(a), manufactured or imported on or after [date 180 days from issuance of final rule] are subject to the requirements of this part and 16 CFR 1500.18(a)(20).

§ 1515.2 Definitions.

In addition to the definitions in section 2 of the Federal Hazardous

Substances Act (15 U.S.C. 1261), the following definitions apply for purposes of this part 1515.

(a) *Youth all terrain vehicle*, or *youth ATV*, means a three-or four-wheeled motorized vehicle intended for use by an operator less than sixteen (16) years of age, that travels on low pressure tires, has a seat designed to be straddled by the operator, has handlebars for steering, and is intended for off-road use on non-paved surfaces.

(b) *Junior ATV* means a youth ATV intended for use by an operator of at least 6 years of age.

(c) *Pre-teen ATV* means a youth ATV intended for use by an operator of at least 9 years of age.

(d) *Teen ATV* means a youth ATV intended for use by an operator of at least 12 years of age.

(e) *Footrest* means a structural support for the operator's foot, can include footpegs and footboards.

(f) *Handlebar* means a device used for steering and rider support and as a place to mount hand-operated controls.

(g) *Low pressure tire* means a tire designed for off-road use on ATVs, and having a recommended tire pressure of no more than 69 kPa (10 psi).

(h) *Manual fuel shutoff control* means a device designed to turn the fuel flow from the fuel tank on and off.

(i) *Manufacturer* means any entity that produces youth ATVs. For purposes of this part 1515, an importer is a manufacturer.

(j) *Mechanical suspension* means a system which permits vertical motion of an ATV wheel relative to the chassis and provides spring and damping forces.

(k) *Parking brake* means a brake system which, after actuation, holds one or more brakes continuously in an applied position without further action.

(l) *PIN* means the Product Identification Number assigned in accordance with *Recreation Off-Road Vehicle Product* Identification Numbering System, SAE International Consortium Standard, ICS–1000, issued 2004–9.

(m) *Retailer* means, for purposes of this part, a person to whom an ATV is delivered or sold for purposes of sale or distribution by such person to a consumer.

(n) *Safety alert symbol* means the symbol which indicates a potential personal injury hazard as defined in section 4.10 of ANSI Z535.4–2002, *American National Standard for Product Safety Signs and Labels.*

(o) *Service brake* means the primary brake system used for slowing and stopping a vehicle.

(p) *Spark arrester* means an exhaust system component which limits the size of carbon particles expelled from a tailpipe.

(q) *Speed limiting device* means a device intended to limit the maximum speed of a vehicle.

(r) *Three-wheeled youth all terrain vehicle* means a youth all terrain vehicle as defined in paragraph (a) of this section that has three wheels.

(s) *Throttle control* means a control which is located on the handlebar and is used to control engine power.

(t) *VIN* means a Vehicle Identification Number assigned as specified in 49 CFR Part 565.

(u) *Wheelbase (L)* means the longitudinal distance between the center of the front axle and the center of the rear axle.

(v) *Wheel travel* means the displacement of a reference point on the suspension (such as the wheel axle) from when the suspension is fully extended (no force applied) to when it is fully compressed.

§ 1515.3 Requirements in general.

(a) Each youth ATV shall be designed for use only by a single rider, shall meet the equipment, configuration and performance requirements specified in subpart B of this part, and shall meet the requirements for labeling, point of sale information, instruction manuals, and instructional training specified in subpart C of this part.

(b) Each youth ATV manufacturer shall comply with the requirements of this part applicable to manufacturers. For purposes of this part, an ATV importer is an ATV manufacturer.

(c) Each youth ATV retailer shall comply with the requirements of this part applicable to such retailers.

Subpart B—Requirements for Equipment, Configuration and Performance

§ 1515.4 Equipment and configuration requirements.

(a) *Service brakes.* All youth ATVs shall have either independently-operated front and rear brakes, or front and rear brakes that are operated by a single control, or both. These brakes shall meet the requirements of § 1515.7.

(1) *Independently-operated front brakes.* Independently-operated front brakes shall be operated by a lever located on the right side of the handlebar and shall be operable without removing the hand from the handlebar.

(2) *Independently-operated rear brakes.* Independently-operated rear brakes shall be operated by either a pedal which is located near the right footrest and operable by the right foot or by a lever located on the left side of the handlebar and operable without removing the hand from the handlebar or by both.

(3) *Simultaneously operated front and rear brakes.* Simultaneously operated front and rear brakes shall be operated by either a pedal which is located near the right footrest and operable by the right foot or by a lever located on the left side of the handlebar and operable without removing the hand from the handlebar or by both.

(b) *Parking brake.* All youth ATVs shall have a parking brake capable of holding the youth ATV stationary under prescribed conditions. The parking brake or parking mechanism shall meet the performance requirements of § 1515.8.

(c) *Mechanical suspension.* All youth ATVs shall have mechanical suspension for all wheels. Each wheel shall have a minimum wheel travel of 50 mm (2 inches). Springing and damping properties shall be provided by components other than the tire.

(d) *Engine stop switch.* All youth ATVs shall have an engine stop switch which is mounted on the left handlebar and is operable by the thumb without removing the hand from the handlebar.

(1) *Operation.* The engine stop switch shall not require the operator to hold it in the off position to stop the engine.

(2) *Color of device.* The switch-operating device shall be orange.

(e) *Throttle control.* All youth ATVs shall be equipped with a means of controlling engine power through a throttle control. The throttle control shall be located on the right side of the handlebar and shall be operable without removing the hand from the handlebar. The throttle control shall be self-closing to an idle position upon release of the operator's hand from the control.

(f) *Automatic transmission.* All youth ATVs shall be equipped with a transmission that effects graduated gear ratios, in proper relation to speed and torque, without the active participation of the operator. It shall not be necessary for the operator to engage a clutch or choose a gear in order for the vehicle's engine to maintain its optimum speed.

(g) *Drivetrain controls*—(1) *Directional/range controls.* Controls for selecting forward, neutral, or reverse or for selecting overall transmission ranges, or for selecting the differential drive (2-wheel or 4-wheel) shall have a defined shift pattern marked for the operator.

(2) *Neutral indicator.* All youth ATVs with a neutral position shall have either a neutral indicator readily visible to the operator when seated on the ATV or a means to prevent starting of the ATV unless the transmission is in the neutral

position. The indicator, if provided, shall be activated whenever the ignition system is on and the transmission is in neutral.

(3) *Reverse indicator.* All youth ATVs with a reverse position shall have a reverse indicator readily visible to the operator when the operator is seated on the ATV. The indicator shall be activated whenever the engine is running and the transmission is in reverse.

(4) *Electric start interlock.* An interlock shall be provided to prevent the youth ATV engine from being started by electric cranking unless the transmission is disengaged or the brake is applied.

(h) *Flag pole bracket.* All youth ATVs shall have a flag pole bracket at the rear of the ATV that provides a rigid mounting location for a flag pole having a 13 mm (0.5 inch) diameter mounting shaft.

(i) *Manual fuel shutoff control.* If a youth ATV is equipped with a manual fuel shutoff control, the device shall be operable as prescribed in 49 CFR 571.123, Table 1.

(j) *Handlebars.* The handlebar and its mounting shall present no rigid materials with an edge radius of less than 3.2 mm (0.125 inch) that may be contacted by a probe in the form of a 165 mm (6.5 inch) diameter sphere. The probe shall be introduced to the handlebar mounting area. It shall not be possible to touch any part of any edge that has a radius of less than 3.2 mm (0.125 inch) with any part of the probe. A handlebar crossbar, if provided, shall be padded.

(k) *Operator foot environment.* All youth ATVs shall have a structure or other design feature which meets the requirements of paragraphs (k)(1) through (4) of this section.

(1) *Test procedure.* Compliance shall be determined by introduction of a probe, whose end is a rigid flat plane surface 75 mm (3 inches) in diameter, in the prescribed direction to the zones as described in paragraphs (k)(2) and (3) of this section and as shown in Figures 1 and 2 of this part.

(i) *Inserting probe vertically and downward.* The probe shall be introduced end-first in a vertical and downward direction to the zone described in paragraph (k)(2) of this section and shown by the shaded portion of Figure 1. The end of the probe in its entirety shall remain within the limits of the zone. It shall not penetrate the zone sufficiently to touch the ground when applied with a force of 445 N (100 lbf).

(ii) *Inserting probe horizontally and rearward.* The probe shall be introduced end-first in a horizontal and rearward direction to the zone described in paragraph (k)(3) of this section and shown by the shaded portion of Figure 2. The end of the probe in its entirety shall remain within the limits of the zone. It shall not penetrate the zone sufficiently to touch the rear tire when applied with a force of 90 N (20 lbf).

(2) *Boundaries of zone in Figure 1 of this Part.* The zone shown in Figure 1 of this part is defined as bounded by:

(i) The vertical projection of the rear edge of the footrest.

(ii) The vertical plane (line AA) parallel to the youth ATV's longitudinal plane of symmetry that passes through the inside edge of the footrest.

(iii) The vertical projection of the intersection of a horizontal plane passing through the top surface of the footrest and the rear fender or other structure.

(iv) The vertical plane passing through point D and tangent to the outer front surface of the rear tire.

(A) For footpegs point D is defined as the intersection of the lateral projection of the rearmost point of the footpeg and the longitudinal projection of the outermost point of the footpeg.

(B) For footboards point D is defined as the intersection of 2 lines. The first is a line perpendicular to the vehicle longitudinal plane of symmetry and one-third of the distance from the front edge of the rear tire to the rear edge of the front tire. The second is a line parallel to the youth ATV's longitudinal plane of symmetry and one-half the distance between the inside edge of the footboard and the outside surface of the rear tire.

(3) *Boundaries of zone in Figure 2 of this Part.* The zone shown in Figure 2 of this part is defined as bounded by:

(i) The horizontal plane passing through the lowest surface of the footrest on which the operator's foot (boot) rests (plane F).

(ii) The vertical plane (line AA) parallel to the ATV's longitudinal plane of symmetry that passes through the inside edge of the footrest.

(iii) The horizontal plane 100 mm (4 inches) above plane F.

(iv) The vertical plane (line BB) parallel to the ATV's longitudinal plane of symmetry and 50 mm (2 inches) inboard of the outer surface of the rear tire.

(4) *Requirements for ATVs with non-fixed structure.* All youth ATVs equipped with a non-fixed type (for example, foldable, removable or retractable) structure intended to meet the requirements of this paragraph (k) shall be equipped with one or more of the following:

(i) A warning device (for example, a buzzer or indicator) to indicate that the structure is not in the position needed to comply with the requirements of this paragraph (k).

(ii) A device to prevent the ATV from being operated under its own power if the structure is not in the position needed to comply with the requirements of this paragraph (k).

(iii) A structure that can be folded, retracted, or removed, such that when the structure is folded, retracted, or removed, the ATV cannot be operated using the footrest in the normal manner.

(l) *Lighting equipment*—(1) *Required equipment.* All youth ATVs shall have at least one stop lamp. The stop lamp shall be illuminated by the actuation of any service brake control. Stop lamps shall conform to Surface Vehicle Standard, Stop Lamps for Use on Motor Vehicles Less than 2032 mm in Overall Width, SAE J586 MAR00 or Surface Vehicle Recommended Practice, Snowmobile Stop Lamp, SAE J278 MAY95.

(2) *Prohibitions on certain lighting.* No youth ATV may be equipped with a projecting headlamp or forward-facing day-time running lights.

(m) *Spark arrester.* All youth ATVs shall have a spark arrester of a type that is qualified according to the United States Department of Agriculture Forest Service Standard for Spark Arresters for Internal Combustion Engines, 5100-l c, September 1997 or Surface Vehicle Recommended Practice, *Spark Arrester Test Procedure for Medium Size Engines,* SAE J350 JAN91.

(n) *Tire marking.* All youth ATV tires shall carry the following markings:

(1) *Inflation pressure.* Both tire sidewalls shall be marked with the operating pressure or the following statement, or an equivalent message: ''SEE VEHICLE LABEL OR OWNER'S MANUAL FOR OPERATING PRESSURE.'' The messages required by this paragraph shall be in capital letters not less than 4 mm (0.156 inch) in height.

(2) *Bead seating pressure.* Both tire sidewalls shall be marked with the following statement, or an equivalent message: ''Do Not Inflate Beyond **psi (**kPa) When Seating Bead.''

(3) *Other markings.* Both tire sidewalls shall have the following information:

(i) The manufacturer's name or brand name.

(ii) On one tire sidewall, the three-digit week and year of manufacture in the form prescribed at 49 CFR 574.5(d), fourth grouping.

(iii) The size nomenclature of the tire (for example, AT 22x10–9*) as

standardized by the Tire and Rim Association, Inc. or the Japan Automobile Tire Manufacturers Association, Inc.

(iv) The word ''tubeless'' for a tubeless tire.

(v) The phrase ''Not For Highway Use'' or ''Not For Highway Service.''

(4) *Letter sizes.* The information required by paragraphs (n)(2) and (3) of this section shall be in letters or numerals no less than 2 mm (.078 inch) in height.

(o) *Tire pressure gauge.* All youth ATVs shall be provided with a tire pressure gauge appropriate for the recommended operating tire pressure. All youth ATVs shall have a means of carrying the tire pressure gauge.

(p) *Security.* All youth ATVs shall have a means to deter unauthorized use.

(q) *Vehicle Identification Number (VIN) or Product Identification Number (PIN).* Each youth ATV shall have prominently displayed on the ATV a unique VIN assigned by its manufacturer in accordance with 49 CFR part 565 or a unique PIN in accordance with *Recreation Off-Road Vehicle Product Identification Numbering System,* SAE International Consortium Standard, ICS–1000, issued 2004–9. If the ATV has a VIN number, the characters in location 4 and 5 of the number shall be ''A'' and ''T'', respectively. The VIN or PIN label shall meet the durability requirements of Underwriters Laboratories Standard UL 969, fourth edition, October 3, 1995.

(r) *Speed limiting devices.* All Pre-teen and Teen ATVs shall be equipped with a means of limiting throttle travel or other means of limiting the maximum speed attainable by the ATV to less than the ATV's maximum speed capability as determined using the test procedure of § 1515.5. The speed limiting device may be adjustable or removable or both, but shall have a means to prevent adjustment or removal without the simultaneous use of at least two different tools.

§ 1515.5 Maximum speed capability test.

(a) *Test conditions.* Test conditions shall be as follows:

(1) ATV test weight shall be the unloaded ATV weight plus the vehicle load capacity (including test operator and instrumentation), with any added weight secured to the seat or cargo area(s) if so equipped.

(2) Tires shall be inflated to the pressures recommended by the ATV manufacturer for the vehicle's test weight.

(3) The test surface shall be clean, dry, smooth and level concrete, or equivalent.

(b) *Test procedure.* Measure the maximum speed capability of the ATV using a radar gun or equivalent method. The test operator shall accelerate the ATV until maximum speed is reached, and shall maintain maximum speed for at least 30.5 m (100 ft). Speed measurement shall be made when the ATV has reached a stabilized maximum speed. A maximum speed test shall consist of a minimum of two measurement test runs conducted over the same track, one each in opposite directions. If more than two measurement runs are made there shall be an equal number of runs in each direction. The maximum speed capability of the ATV shall be the arithmetic average of the measurements made. A reasonable number of preliminary runs may be made prior to conducting a recorded test.

§ 1515.6 Maximum speed capability requirements.

(a) *Performance requirement for Junior ATV.* When tested in accordance with the procedures of § 1515.5 with any removable speed limiting device removed and with any adjustable speed limiting device adjusted to provide the ATV's maximum speed capability, the maximum speed capability of a Junior ATV shall not exceed 10 mph.

(b) *Performance requirements for Pre-teen youth ATV.* (1) When tested in accordance with the procedures of § 1515.5 with any removable speed limiting device removed and with any adjustable speed limiting device adjusted to provide the ATV's maximum speed capability, the maximum speed capability of a Pre-teen youth ATV shall not exceed 15 mph.

(2) When tested in accordance with the procedures of § 1515.5 with the speed limiting device required by § 1515.4(r) adjusted accordingly, the Pre-teen youth ATV shall accelerate to a maximum speed that does not exceed 10 mph.

(c) *Performance requirements for Teen ATV.* (1) When tested in accordance with the procedures of § 1515.5 with any removable speed limiting device removed and with any adjustable speed limiting device adjusted to provide the ATV's maximum speed capability, the maximum speed capability of a Teen ATV shall not exceed 30 mph.

(2) When tested in accordance with the procedures of § 1515.5 with the speed limiting device required by § 1515.4(r) adjusted accordingly, Teen ATV shall accelerate to a maximum speed that does not exceed 15 mph.

(d) *Maximum speed requirements on delivery to consumer.* (1) Each Pre-teen ATV shall be delivered to the purchaser with the speed limiting device required by § 1515.4(r) adjusted so that the maximum speed of the ATV does not exceed 10 mph when tested in accordance with § 1515.5.

(2) Each Teen ATV shall be delivered to the purchaser with the speed limiting device required by § 1515.4(r) adjusted so that the maximum speed of the ATV does not exceed 15 mph when tested in accordance with § 1515.5.

§ 1515.7 Service brake performance test.

(a) *Test conditions.* Test conditions shall be as follows.

(1) The ATV test weight shall be the unloaded vehicle weight plus the vehicle load capacity (including test operator and instrumentation) with any added weight secured to the seat or cargo area(s), if equipped.

(2) Tires shall be inflated to the pressures recommended by the ATV manufacturer for the vehicle test weight.

(3) Engine idle speed and ignition timing shall be set according to the manufacturer's recommendations.

(4) Ambient temperature shall be between 0 °C (32 °F) and 38 °C (100 °F).

(5) The test surface shall be clean, dry, smooth and level concrete, or equivalent.

(6) Any removable speed limiting devices shall be removed and any adjustable speed limiting devices shall be adjusted to provide the ATV's maximum speed capability.

(b) *Test procedure.* The test procedure shall be as follows:

(1) Measure the maximum speed capability of the ATV in accordance with § 1515.5. Determine the braking test speed (V). The braking test speed is the speed that is the multiple of 8 km/h (5 mph), which is 6 km/h (4 mph) to 13 km/h (8 mph) less than the maximum speed capability of the ATV.

(2) Burnish the front and rear brakes by making 200 stops from the braking test speed. Stops shall be made by applying front and rear service brakes simultaneously, and braking decelerations shall be from 1.96 m/s^2 to 4.90 m/s^2 (0.2 g to 0.5 g).

(3) After burnishing, adjust the brakes according to the manufacturer's recommendation.

(4) Make six stops from the braking test speed. Stops shall be made by applying the front and rear service brakes simultaneously, and braking decelerations shall be from 1.96 m/s^2 to 4.90 m/s^2 (0.2 g to 0.5 g).

(5) Make four stops from the braking test speed, applying the front and rear service brakes. Measure the speed immediately before the service brakes are applied. Appropriate markers or

instrumentation shall be used which will accurately indicate the point of brake application. Measure the stopping distance (S).

(i) Hand lever brake actuation force shall be not less than 22 N (5 lbf) and not more than 133 N (30 lbf) and foot pedal brake actuation force shall be not less than 44 N (10 lbf) and not more than 222 N (50 lbf).

(ii) The point of initial application of lever force shall be 25 mm (1.0 in.) from the end of the brake lever. The direction of lever force application shall be perpendicular to the handle grip in the plane in which the brake lever rotates. The point of application of pedal force shall be the center of the foot contact pad of the brake pedal, and the direction of force application shall be perpendicular to the foot contact pad and in the plane in which the brake pedal rotates.

(c) *Performance requirements*—(1) *Junior and Pre-teen ATVs.* For each Junior and each Pre-teen ATV, at least one of the four stops required by paragraph (b)(5) of this section shall comply with the relationship:

$S \leq V/5.28$

Where:

S = brake stopping distance (m)
V = braking test speed (km/h)

$S \leq V$

Where:

S = brake stopping distance (ft)
V = braking test speed (mph)

(2) *Teen ATVs.* For each Teen ATV, at least one of the four stops required by paragraph (b)(5) of this section shall have an average braking deceleration of 5.88 m/s^2 (0.6 g) or greater. Average braking deceleration can be determined according to the following formulae [1]:

$a = V^2/25.92S$

Where:

a = average deceleration (m/s^2)
S = brake stopping distance (m)
V = braking test speed (km/h)

$a = [(.033) \times V^2]/S$

Where:

a = average deceleration (g)
S = brake stopping distance (ft)
V = braking test speed (mph)

§ 1515.8 Parking brake performance test.

(a) *Test conditions.* Test conditions shall be as follows:

(1) ATV test weight shall be the unloaded ATV weight plus weight secured to the seat or cargo area(s) (if equipped), which is equal to the manufacturer's stated vehicle load capacity.

(2) Tires shall be inflated to the pressures recommended by the ATV manufacturer for the vehicle test weight.

(3) The test surface shall be clean, dry, smooth concrete or equivalent, having a 30 percent grade.

(b) *Test procedure.* The test procedure shall be as follows:

(1) Burnish the service brakes according to the procedure specified in § 1515.7(b)(2) if service brakes are used as part of the parking brake.

(2) Adjust the parking brake according to the procedure recommended by the ATV manufacturer.

(3) Position the ATV facing downhill on the test surface, with the longitudinal axis of the ATV in the direction of the grade. Apply the parking brake and place the transmission in neutral. Leave the ATV undisturbed for 5 minutes. Repeat the test with the ATV positioned facing uphill on the test surface.

(c) *Performance requirements.* When tested according to the procedure specified in paragraph (b) of this section, the parking brake shall be capable of holding the ATV stationary on the test surface, to the limit of traction of the tires on the braked wheels, for 5 minutes in both uphill and downhill directions.

§ 1515.9 Pitch stability requirements.

(a) *Test conditions.* Test conditions shall be as follows:

(1) The ATV shall be in standard condition, without accessories. The ATV and components shall be assembled and adjusted according to the manufacturer's instructions and specifications.

(2) Tires shall be inflated to the ATV manufacturer's recommended settings for normal operation. If more than one pressure is specified, the highest value shall be used.

(3) All fluids shall be full (oil, coolant, and the like), except that fuel shall be not less than three-fourths full. ATV shall be unladen, with no rider, cargo, or accessories.

(4) Steerable wheels shall be held in the straight ahead position.

(5) Adjustable suspension components shall be set to the values specified at the point of delivery to the dealer.

(6) Suspension components shall be fixed by means of a locking procedure such that they remain in the same position and displacement as when the unladen ATV is on level ground, and in the conditions specified in paragraphs (a)(1) through (5) of this section.

(b) *Test procedure.* The test procedure shall be as follows:

(1) Calculations based on vehicle metrics:

(i) Measure and record the wheelbase (L). The measurement of this length shall be done with an accuracy of ±5 mm (±0.2 inch) or ±0.5%, whichever is greater.

(ii) Measure and record the front and rear weights, (W_f and W_r, respectively). W_f is the sum of the front tire loads; and W_r is the sum of the rear tire loads with the ATV level and in the condition specified in paragraph (a) of this section. The measurements of these weights shall be done with an accuracy of ± 0.5 kg (± 1.1 lb) or ± 0.5%, whichever is greater.

(iii) Using the values obtained in paragraphs (b)(1)(i) and (ii) of this section, compute and record the quantity as follows: $L_1 = ((W_f/(W_f + W_r)) \times L$.

(iv) Measure and record the vertical height between the rear axle center and the ground (R_r). This measurement shall be done on level ground, with the ATV in the conditions specified in subsection (a) of this section, with an accuracy of ± 3 mm (± 0.1 inch) or ± 1.5%, whichever is greater.

(v) Measure and record the balancing angle alpha. The procedure for obtaining this value is as follows: with the ATV on a level surface, the front of the vehicle shall be rotated upward about the rear axle without setting the rear parking brake or using stops of any kind, until the ATV is balanced on the rear tires. The balancing angle alpha through which the ATV is rotated shall be measured and recorded with an accuracy of ± 0.5 degrees. If an assembly protruding from the rear of the ATV, such as a carry bar or trailer hitch or hook, interferes with the ground surface, so as to not allow a balance to be reached, the vehicle shall be placed on blocks of sufficient height to eliminate the interference.

(vi) Repeat the measurement in paragraph (b)(1)(v) of this section and determine if the two individual measurements are within 1.0 degree of each other. If they are not, repeat the measurements two more times and compute the average of the four individual measurements, and use that as the value.

(2) *Tilt table procedure.* The ATV shall be placed on a variable slope single-plane tilt table. The steerable wheels shall be straight forward. The ATV shall be positioned on the tilt table with its longitudinal center line perpendicular to the tilt axis of the table and its rear positioned downhill. The table shall be tilted until lift-off of the upper wheel(s) occurs. Measure the angle at which lift-off of the upper wheel(s) occurs. Lift-off shall have occurred when a strip of 20-gauge steel

[1] Direct on-board instrumentation may be used to acquire any measurement data.

[approximately 1 mm (.039 inch) thick], 76 mm (3 inch) minimum width, can be pulled from or moved under the second uphill tire to lift with a force of 9 N (2 lb) or less.

(c) *Performance requirements.* (1) *Computation from vehicle metrics.* Using the values obtained in paragraphs (b)(1)(iii), (b)(1)(iv), and (b)(1)(vi) of this section, compute the pitch stability coefficient as follows: $K_p = (L_1 \tan \text{alpha})/(L_1 + R_r \tan \text{alpha})$.

(2) *Computation from tilt table.* The pitch stability coefficient K_p is the tangent of the tilt table angle.

(3) *Requirement.* The pitch stability coefficient K_p calculated according to paragraph (c)(1) or (c)(2) of this section shall be at least 1.0.

Subpart C—Requirements for Labeling, Point of Sale Information and Instruction

§ 1515.10 Labeling requirements.

(a) *General warning label.* (1) Each youth ATV shall have affixed to it a general warning label in English that meets the requirements of this section.

(2) *Content.* The general warning label shall display the safety alert symbol and the word ''WARNING'' in capital letters. The label shall contain the following, or substantially equivalent, statements. They may be arranged on the label to place the prohibited actions together and the required actions together.

''THIS VEHICLE CAN BE HAZARDOUS TO OPERATE. A collision or rollover can occur quickly, even during routine maneuvers such as turning and driving on hills or over obstacles, if you fail to take proper precautions.''

''SEVERE INJURY OR DEATH can result if you do not follow these instructions:''

''BEFORE YOU OPERATE THIS ATV, READ THE OWNER'S MANUAL AND ALL LABELS.''

''NEVER OPERATE THIS ATV WITHOUT PROPER INSTRUCTION. Beginners should complete a training course.''

''NEVER CARRY A PASSENGER. You increase your risk of losing control if you carry a passenger.''

''NEVER OPERATE THIS ATV ON PAVED SURFACES. You increase your risk of losing control if you operate this ATV on pavement.

''NEVER OPERATE THIS ATV ON PUBLIC ROADS. You can collide with another vehicle if you operate this ATV on a public road.''

''ALWAYS WEAR AN APPROVED MOTORCYCLE HELMET, eye protection, and protective clothing.''

''NEVER CONSUME ALCOHOL OR DRUGS before or while operating this ATV.''

''NEVER OPERATE THIS ATV AT EXCESSIVE SPEEDS. You increase your risk of losing control if you operate this ATV at speeds too fast for the terrain, visibility conditions, or your experience.''

''NEVER ATTEMPT WHEELIES, JUMPS, OR OTHER STUNTS.''

(3) *Format.* The color scheme, typeface and formatting of the label shall be consistent with ANSI Z535.4 (American National Standard for Product Safety Signs and Labels) (2002).

(4) *Location.* This label shall be affixed to the left front fender so it is easily visible in its entirety to the operator when seated on the vehicle in the proper operating position. If this location is not available for a particular ATV, the label shall be affixed to the right front fender so as to be easily read by the operator when seated on the ATV in the proper operating position.

(b) *Age recommendation warning label.* (1) Each youth ATV shall have affixed an age recommendation warning label in English that meets the requirements of this section.

(2) *Content.* (i) Label for Junior ATV. The age recommendation warning label for a Junior ATV shall display the safety alert symbol and the word ''WARNING'' in capital letters. The label shall contain a circle with a slash through it and the wording ''UNDER 6'' inside the circle. Below the circle, the label shall contain the following, or substantially equivalent, statements:

''Operation of this ATV by children under the age of 6 increases the risk of severe injury or death.

Adult supervision required for children under age 16.

NEVER let children under age 6 operate this ATV.''

(ii) *Label for Pre-teen ATV.* The age recommendation warning label for a Pre-teen ATV shall display the safety alert symbol and the word ''WARNING'' in capital letters. The label shall contain a circle with a slash through it and the wording ''UNDER 9'' inside the circle. Below the circle, the label shall contain the following, or substantially equivalent, statements:

''Operation of this ATV by children under the age of 9 increases the risk of severe injury or death.

Adult supervision required for children under age 16.

NEVER let children under age 9 operate this ATV.''

(iii) *Label for Teen ATV.* The label age recommendation warning label for a Teen ATV shall display the safety alert symbol and the word ''WARNING'' in capital letters. The label shall contain a circle with a slash through it and the wording ''UNDER 12'' inside the circle. Below the circle, the label shall contain the following, or substantially equivalent, statements:

''Operation of this ATV by children under the age of 12 increases the risk of severe injury or death.

Adult supervision required for children under age 16.

NEVER let children under age 12 operate this ATV.''

(3) *Format.* The color scheme, typeface and formatting of the age recommendation label shall be consistent with ANSI Z535.4 (2002).

(4) *Location.* This label shall be affixed to the fuel tank so it is visible in its entirety to the operator when seated on the vehicle in the proper operating position. If this location is not available for a particular ATV, or, if affixed at this location the label will not meet the durability requirement of paragraph (f) of this section, the label shall be placed on the front fender above the label required by paragraph (a) of this section so that it is visible in its entirety to the operator. If this location is not available for a particular ATV, the label shall be placed on the vehicle body immediately forward of the seat so it is visible in its entirety to the operator when seated on the vehicle in the proper operating position.

(c) *Passenger warning label.* (1) Each youth ATV shall have affixed a passenger warning label in English that meets the requirements of this section.

(2) *Content.* The passenger warning label shall display the safety alert symbol and the word ''WARNING'' in capital letters. The label shall contain the following, or substantially equivalent, statements:

''Passengers can affect ATV balance and steering. The resulting loss of control can cause SEVERE INJURY or DEATH.

NEVER ride as a passenger.''

(3) *Format.* The color scheme, typeface and formatting of the label shall be consistent with ANSI Z535.4 (2002).

(4) *Location.* This label shall be affixed either to a flat surface of the vehicle body located to the rear of the seat and toward the center of the vehicle, or to the rear portion of the vehicle seat itself. If neither of these locations is available for a particular vehicle, the label shall be affixed to the left rear fender or the left side of the body so as to be easily seen by a potential passenger.

(d) *Tire pressure and overload warning label(s).* (1) Each youth ATV shall have affixed a label or labels in English that meet the requirements of this section warning against improper air pressure in the ATV's tires and against overloading. Manufacturers may affix one warning label addressing both hazards.

(2) *Content.* The label(s) shall contain the safety alert symbol and the signal word ''WARNING'' in capital letters. Every label warning about improper tire pressure shall contain a statement indicating the recommended tire pressure, either on the label or by

reference to the owner's manual and/or the tires. Every label warning against overloading shall contain a statement indicating the maximum weight capacity for the ATV model.

(i) If a manufacturer uses separate tire pressure and overloading labels, the label to warn of tire pressure shall contain the following, or substantially equivalent, statements:

—''Improper tire pressure can cause loss of control. Loss of control can result in severe injury or death.''

(ii) If a manufacturer uses separate tire pressure and overloading labels, the label to warn of overloading hazards shall contain the following, or substantially equivalent, statements:

—''Overloading can cause loss of control. Loss of control can result in severe injury or death.''

(iii) If a manufacturer uses one label for both tire pressure and overloading warnings, the label shall contain the following, or substantially equivalent, statements:

''Improper tire pressure or overloading can cause loss of control. Loss of control can result in severe injury or death.''

(3) *Format.* The color scheme, typeface and formatting of the label shall be consistent with ANSI Z535.4 (2002).

(4) *Location.* The label(s) shall be affixed to the left rear fender above the axle, facing outward in such a position that it (they) can be read by the operator when mounting the vehicle.

(e) *Label durability requirements.* Each label required or permitted by this section shall meet the standards for durability of Underwriters Laboratories Standard UL 969, fourth edition, October 3, 1995.

(f) *Discretionary labels.* Labels in addition to those specified in paragraphs (a) through (d) of this section may be affixed to the vehicle provided that:

(1) The discretionary labels are consistent with ANSI Z535.4 (2002); and

(2) Discretionary labels shall be affixed to ATVs in an appropriate location that does not detract from the mandatory labels required in paragraphs (a) through (d) of this section.

§ 1515.11 Hangtag requirements.

(a) Each youth ATV shall be equipped at the point of sale with a hang tag that, at a minimum, contains in English:

(1) The contents of the general warning label described in § 1515.10(a);

(2) The statement—''Even though a child is of the recommended age to operate a particular size ATV, not all children have the strength, skills, or judgment needed to operate an ATV safely, and parents should, therefore, supervise their child's operation of the ATV at all times''—;

(3) The statement—''This hang tag is not to be removed before sale''—; and

(4) The statement—''Check with your dealer to find out about state or local laws regarding ATV operation.''

(b) Each hang tag shall be attached to the ATV in such a manner as to be conspicuous and removable only with deliberate effort.

(c) Each hang tag shall be at least 4 by 6 inches.

1515.12 Age acknowledgment.

(a) *General.* The retailer shall provide the purchaser of each youth ATV with an age acknowledgment in the form shown in figure 3.

(b) *Signature.* Prior to the sales transaction, the retailer shall require that the purchaser of the ATV sign the age acknowledgment representing that the purchaser has read and understood the age acknowledgment.

(c) *Copies/retention.* The retailer shall provide the purchaser of the ATV and the manufacturer of the ATV with a copy of the signed age acknowledgment. The retailer shall retain the signed original of the age acknowledgment for a minimum of five (5) years after the date of the purchase of the ATV to which it pertains. The manufacturer shall retain the copy of the age acknowledgment for a minimum of five (5) years after the date of the purchase of the ATV to which it pertains.

1515.13 Instructional/owner's manual.

(a) *General.* (1) All youth ATVs shall be delivered to the purchaser with an instructional/owner's manual that meets the requirements of this section. All youth ATVs shall be equipped with a means of carrying the manual that protects it from destructive elements while allowing reasonable access.

(2) Each manual shall be in English and shall be written and designed in a manner reasonably calculated to convey information regarding safe operation and maintenance of the vehicle by persons who read such manual.

(3) Each manual shall be written in plain, simple language so as to be readily comprehended by the average seventh grader, as measured by a standard technique for assessing the readability of written materials.

(4) Information in each manual shall be presented in a meaningful sequence designed to permit readers to understand the information presented and appreciate its significance.

(5) Each manual shall be consistent with other safety messages required by this part, including those contained in warning labels, hang tags, and the safety video.

(6) Each manufacturer shall retain a copy of the manual for each model until five years after the model has ceased to be in production. The manufacturer shall make the manual available to CPSC upon request.

(b) Contents. Each manual shall contain—

(1) A statement on the outside front cover that, at a minimum, alerts the reader that the manual contains important safety information which should be read carefully.

(2) A statement on the outside front cover stating the age recommendation for the particular ATV model in question.

(3) Definitions for ''warning'' and ''caution'' that are consistent with, or in any event not weaker than, the definitions for those terms contained in American National Standards Institute (ANSI) standard Z535–2002 along with an introductory statement alerting the reader to the significance of the safety alert symbol and the signal words.

(4) A reminder that the safety alert symbol with the word ''WARNING'' indicates a potential hazard that could result in serious injury or death. This reminder shall be repeated immediately preceding the table of contents, at the beginning and end of the section describing proper operating procedures, on the last page before the outside back cover (or on the inside back cover), and a total of at least five (5) more times, appropriately spaced, within sections containing warnings.

(5) An introductory safety message emphasizing the importance of reading and understanding the manual prior to operation of the ATV, the importance of and availability of the instructional training required by § 1515.15, and the importance of the age recommendation for the particular model. This introductory message shall contain, at a minimum, the following statement:

Failure to follow the warnings contained in this manual can result in SERIOUS INJURY or DEATH

(6) An introductory notice to parents emphasizing that an ATV is not a ''toy,'' the importance of children completing the instructional training required by § 1515.15 of this part, and the importance of children understanding and following the instructions and warnings contained in the manual. This introductory statement shall also contain, at a minimum, the following statement:

Children differ in skills, physical abilities, and judgment. Some children may not be

able to operate an ATV safely. Parents should supervise their children's use of the ATV at all times.

(7) An introductory safety section which, at a minimum, contains the following safety messages in the form shown:

AN ATV IS NOT A TOY AND CAN BE HAZARDOUS TO OPERATE. An ATV handles differently from other vehicles including motorcycles and cars. A collision or rollover can occur quickly, even during routine maneuvers such as turning and driving on hills or over obstacles, if you fail to take proper precautions.

SEVERE INJURY OR DEATH can result if you do not follow these instructions:

1. Read this manual and all labels carefully and follow the operating procedures described.
2. Never operate an ATV without proper instruction. *Take a training course.* Contact an authorized ATV dealer to find out about the training courses near you.
3. Always follow the age recommendations for this ATV.
4. Never allow a child under 16 to operate an ATV without adult supervision, and never allow continued use of an ATV by a child if he or she does not have the abilities to operate it safely.
5. Never carry a passenger on an ATV, unless it is a two-person ATV.
6. Never operate an ATV on any paved surfaces, including sidewalks, driveways, parking lots and streets.
7. Never operate an ATV on any public street, road or highway, even a dirt or gravel one.
8. Never operate an ATV without wearing an approved helmet that fits properly. You should also wear eye protection (goggles or face shield), gloves, boots, long-sleeved shirt or jacket, and long pants.
9. Never consume alcohol or drugs before or while operating an ATV.
10. Never operate at excessive speeds. Always go at a speed that is proper for the terrain, visibility and operating conditions, and your experience.
11. Never attempt wheelies, jumps, or other stunts.
12. Always inspect your ATV each time you use it to make sure it is in safe operating condition. Always follow the inspection and maintenance procedures and schedules described in this manual.
13. Always keep both hands on the handlebars and both feet on the footpegs of the ATV during operation.
14. Always go slowly and be extra careful when operating on unfamiliar terrain. Always be alert to changing terrain conditions when operating the ATV.
15. Never operate on excessively rough, slippery or loose terrain until you have learned and practiced the skills necessary to control the ATV on such terrain. Always be especially cautious on these kinds of terrain.
16. Always follow proper procedures for turning as described in this manual. Practice turning at low speeds before attempting to turn at faster speeds. Do not turn at excessive speed.
17. Never operate the ATV on hills too steep for the ATV or for your abilities. Practice on smaller hills before attempting larger hills.
18. Always follow proper procedures for climbing hills as described in this manual. Check the terrain carefully before you start up any hill. Never climb hills with excessively slippery or loose surfaces. Shift your weight forward. Never open the throttle suddenly or make sudden gear changes. Never go over the top of any hill at high speed.
19. Always follow proper procedures for going down hills and for braking on hills as described in this manual. Check the terrain carefully before you start down any hill. Shift your weight backward. Never go down a hill at high speed. Avoid going down a hill at an angle that would cause the vehicle to lean sharply to one side. Go straight down the hill where possible.
20. Always follow proper procedures for crossing the side of a hill as described in this manual. Avoid hills with excessively slippery or loose surfaces. Shift your weight to the uphill side of the ATV. Never attempt to turn the ATV around on any hill until you have mastered the turning technique described in this manual on level ground. Avoid crossing the side of a steep hill if possible.
21. Always use proper procedures if you stall or roll backwards when climbing a hill. To avoid stalling, use proper gear and maintain a steady speed when climbing a hill. If you stall or roll backwards, follow the special procedure for braking described in this manual. Dismount on the uphill side or to a side if pointed straight uphill. Turn the ATV around and remount, following the procedure described in this manual.
22. Always check for obstacles before operating in a new area. Never attempt to operate over large obstacles, such as large rocks or fallen trees. Always follow proper procedures when operating over obstacles as described in this manual.
23. Always be careful when skidding or sliding. Learn to safely control skidding or sliding by practicing at low speeds and on level, smooth terrain. On extremely slippery surfaces, such as ice, go slowly and be very cautious in order to reduce the chance of skidding or sliding out of control.
24. Never operate an ATV in fast flowing water or in water deeper than that specified in this manual. Remember that wet brakes may have reduced stopping ability. Test your brakes after leaving water. If necessary, apply them several times to let friction dry the linings.
25. Always be sure there are no obstacles or people behind you when you operate in reverse. When it is safe to proceed in reverse, go slowly.
26. Always use the size and type tires specified in this manual. Always maintain proper tire pressure as described in this manual.
27. Never modify an ATV through improper installation or use of accessories.
28. Never exceed the stated load capacity for an ATV. Cargo should be properly distributed and securely attached. Reduce speed and follow instructions in the manual for carrying cargo or pulling a trailer. Allow greater distance for braking.

FOR MORE INFORMATION ABOUT ATV SAFETY, visit the CPSC website at *www.cpsc.gov* or call the Consumer Product Safety Commission at 1–800–638–2772, or [insert contact number for manufacturer].''

(8) An appropriate table of contents identifying the major portions of the manual.

(9) Descriptions of the location of warning labels on the ATV and an introductory statement emphasizing the importance of understanding and following the labels and the importance of keeping the labels on the ATV. The introductory statement shall also contain instructions on how to obtain a replacement label in the event any label becomes difficult to read. These instructions shall include a toll-free telephone number that can be called to obtain a replacement label.

(10) A toll-free telephone number, or other no cost means, for the owner of the ATV to contact the manufacturer to report safety issues and/or seek information on the proper, safe operation of the ATV.

(11) A description of pre-operating inspection procedures and a statement emphasizing the importance of these procedures.

(12) A description of proper operating procedures and of potential hazards associated with improper operation of the ATV. The section of each manual devoted to describing proper operating procedures shall include material addressing in narrative text form and in appropriate detail all of the topics addressed in paragraph (b)(7) of this section. Such narrative text shall identify particular potential hazards associated with the types of operation or behavior in question, the possible consequences of such operation or behavior, and shall describe the manner in which the vehicle should be properly operated to avoid or reduce the risk associated with such hazards. Such narrative text shall include warning statements and corresponding illustrations in conformance with the requirements of this section. The language of the narrative sections accompanying each warning shall not contradict any information contained in the warning section and shall be written to draw attention to the warning.

(13) Descriptions of proper maintenance, storage, and transportation procedures.

(14) On the outside back cover, the contents of the general warning label required by § 1515.10(a).

§ 1515.14 Safety video.

(a) *General.* The retailer shall provide the purchaser with a safety video at or before the completion of the purchase

transaction. The safety video shall be designed to communicate to an audience consisting of prospective purchasers and users, including children between the ages of 9 and 16, and their parents.

(b) *Title.* The title of the safety video shall indicate that the video provides safety information concerning ATV operation.

(c) *Content.* The safety video shall communicate the following:

(1) The contents of the hang tag described in § 1515.11;

(2) The concept that a person operating an ATV should know his or her limitations and not attempt to perform any maneuver or traverse any terrain if performing the maneuver or operating on the terrain is beyond that person's capabilities and experience;

(3) The importance of practicing and gradually progressing from basic to more complex maneuvers; and

(4) The importance of keeping alert at all times and the concept that even a brief distraction can lead to loss of control resulting in a severe or fatal accident.

(5) ATV-related death and injury statistics both for all riders and for children under the age of 16. The video may use rolling five-year averages, and the statistics only need to be up-dated if there is a statistically significant change in either the death or injury statistics. Such change shall be noted in the subsequent video.

(d) *Dramatization.* All dramatizations designed to communicate any of the concepts set forth in the preceding subsection shall be unambiguous. To avoid ambiguity and ensure clarity, dramatizations shall:

(1) In the case of dramatizations that show an accident occurring, averted, or about to occur, the video shall contain no intervening events that detract from communication of the hazard (for example, the presence of an obstacle on a paved surface when communicating the hazard of operating on a paved surface, or a person running in front of an ATV when communicating the hazard of carrying passengers on a youth ATV or a single rider adult ATV); and

(2) in the case of dramatizations that show either the conduct, terrain, or maneuvers that a person should avoid, or the conduct that a person should observe, the video shall also unequivocally state the relevant safety message, either verbally by means of lines spoken by a screen character or narrator, in written form, or both.

(e) *Format.* The safety video shall be made available in at least one commonly used format, *e.g.*, VHS or DVD, and the purchaser shall be given the option at no cost of procuring the safety video in at least one format other than the one originally supplied with the ATV at the time of purchase.

(f) *Retention.* The manufacturer shall retain a copy of the safety video until five years after the model to which applies ceases to be in production. The manufacturer shall make the video available to CPSC upon request.

1515.15 Instructional training.

(a) *General.* The manufacturer shall provide to the purchaser at no charge a training course for the purchaser and each member of the purchaser's immediate family who meets or exceeds the minimum age recommendation for the ATV in question. The training course shall be provided in the form of one certificate valid for the purchaser and each qualifying member of the purchaser's immediate family redeemable at no cost for attendance at a training course meeting the requirements of this section.

(b) *Form of certificate.* Each certificate shall identify the VIN or PIN number and category of ATV (*i.e.* Junior, Pre-teen, or Teen) to which it pertains and shall have no expiration date. In addition the certificate shall include a toll-free telephone number or other readily useable means for the purchaser to contact the training organization to arrange for training.

(c) *Retailer responsibility.* The retailer shall provide the certificate to the purchaser at the time of purchase and shall obtain the purchaser's signature on the training availability form shown in Figure 4 of this part. The retailer shall retain the signed original of the training availability form and shall provide the purchaser and the manufacturer of the ATV with a copy.

(d) *Course content.* The training curriculum shall, at a minimum, address the following:

(1) The risks of ATV-related deaths and injuries (risk awareness).

(2) The role of safety equipment, including identifying suitable equipment, properly using equipment, and understanding why it is used.

(3) Rider responsibilities, including:

(i) Why children/youths should not ride adult ATVs;

(ii) Why all ATV users should take a hands-on safety training course;

(iii) Why one should never ride a youth ATV or non-tandem adult ATV with a passenger or as a passenger;

(iv) Why one should never drive an ATV on paved roads;

(v) Why one should always wear a helmet and other protective gear while on an ATV; and

(vi) Why one should never drive an ATV while under the influence of alcohol or drugs.

(4) Identifying displays and controls;

(5) Recognizing limitations, including inclines and rider abilities;

(6) Evaluating a variety of situations to predict proper course of action, including terrain obstacles and behavior of other riders;

(7) Demonstrating successful learning of riding skills, including:

(i) Starting and stopping;

(ii) negotiating turns, including gradual, sharp, and quick turns, weaving, and evasive maneuvers;

(iii) Stopping in a turn;

(iv) Emergency braking while straight and while turning.

(v) Negotiating full track and partial track obstacles.

(vi) Negotiating hills, including ascending, descending, traversing, and emergency situations; and

(vii) Combining skills together in a non-predictable manner (*i.e.* trail ride or free riding period with instructor supervision and critique).

(e) *Course structure.* The course shall include classroom, field, and trail activities.

(f) *Course duration.* The course duration shall be sufficient to cover the topics noted in this section and allow for each student to individually master the riding skills addressed in the course at the level commensurate with the terrain at the location of the course, and allow for written and riding skills tests.

(g) *Course accessibility.* The course shall be provided within a reasonable time from the date of purchase of the ATV and a reasonable distance from the place of purchase of the ATV.

Subpart D—Certification/Testing/Recordkeeping

§ 1515.16 Certification.

(a) At the location of the VIN or PIN number, the following statement shall be made: ''The manufacturer certifies that this ATV complies with all applicable requirements of 16 CFR part 1515.''

(b) The VIN or PIN number and compliance statement shall meet the durability requirements of Underwriters Laboratories Standard UL 969, fourth edition, October 3, 1995.

§ 1515.17 Testing.

Each manufacturer of ATVs subject to this part shall perform or cause to be performed testing sufficient to demonstrate on an objectively reasonable basis that each ATV produced by that manufacturer meets the performance requirements of §§ 1515.4 through 1515.9.

§ 1515.18 Recordkeeping.

(a) *Manufacturer requirements.* Each manufacturer (the importer is considered a manufacturer for purposes of this part) of ATVs subject to this part shall:

(1) Maintain records in English sufficient to demonstrate that each ATV produced by that manufacturer complies with the requirements of this part;

(2) Unless otherwise specified, retain records required by this part for a period of at least five (5) years after production of the model of ATV to which the records pertain ceases;

(3) Maintain records required by this part at a location in the United States; and

(4) Make records required by this part available for inspection at the request of a duly authorized representative of the U.S. Consumer Product Safety Commission.

(b) *Retailer requirements.* Each retailer of ATVs subject to this part shall:

(1) Maintain the original of each age acknowledgment required by § 1515.12 and each acknowledgment of training availability required by § 1515.15 for a period of at least five (5) years after the date of purchase of the ATV to which the acknowledgments pertain;

(2) Maintain records required by this section at a location in the United States; and

(3) Make records required by this section available for inspection at the request of a properly authorized representative of the U.S. Consumer Product Safety Commission.

BILLING CODE 6355–01–P

Figure 1 to Part 1515

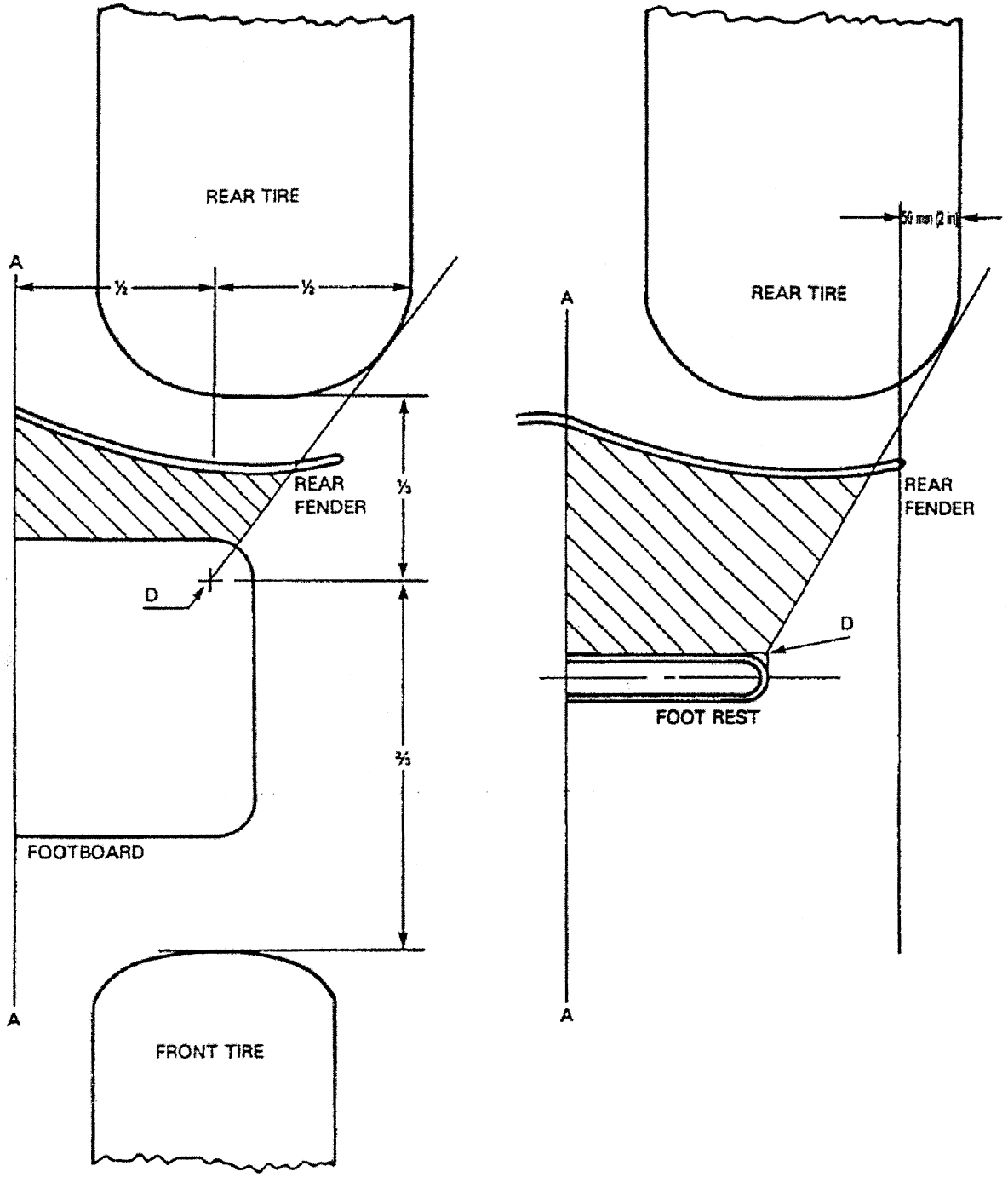

Figure 1
Operator Foot Environment - Plan View

Figure 2 to Part 1515

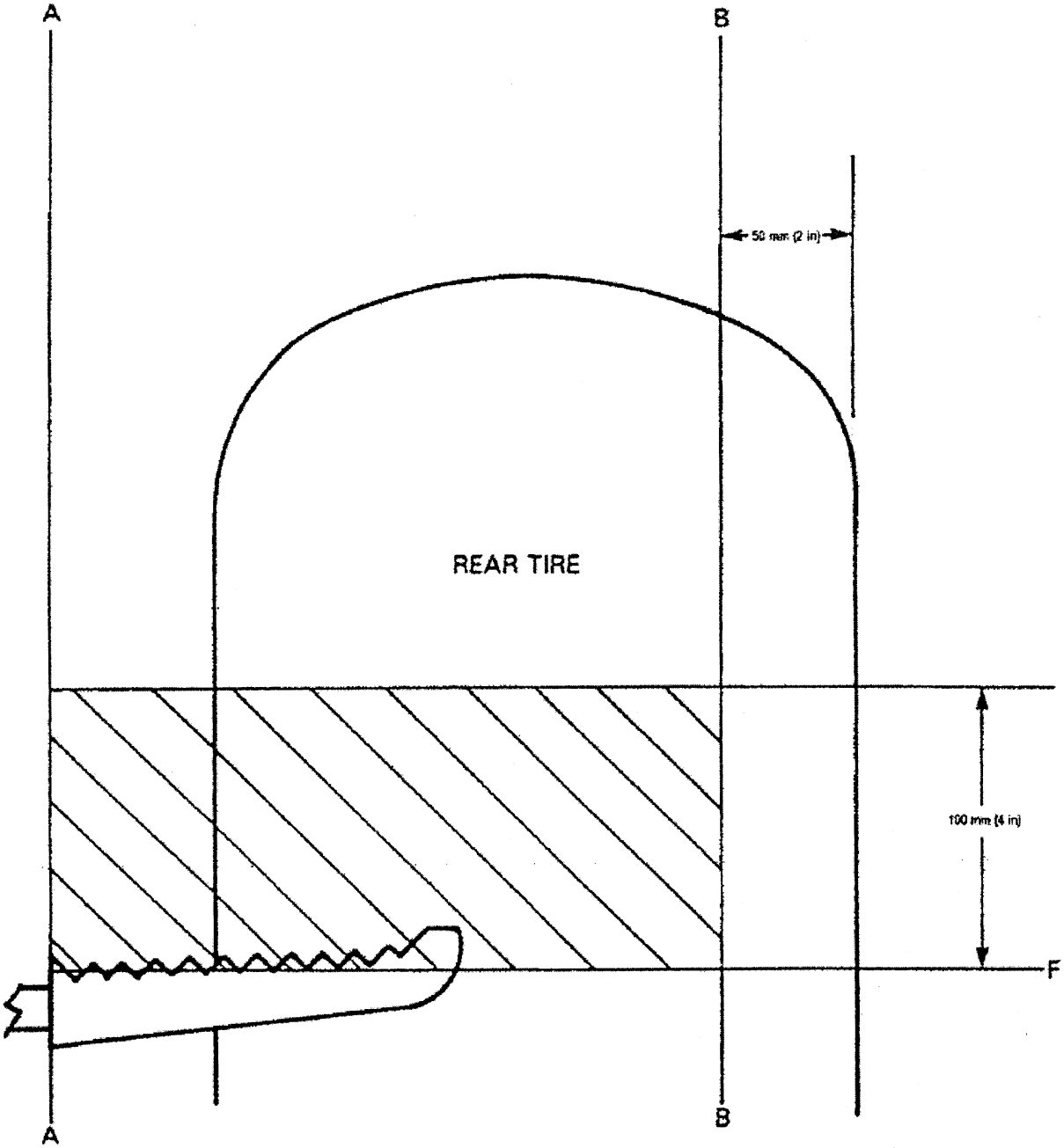

Figure 2
Operator Foot Environment - Front View

Figure 3 to Part 1515

The ATV you are considering is for youth drivers

Not all children develop at the same rate. Kids and teens have immature judgment, tend to take risks, disregard consequences, and bow to peer pressure – even if they have been riding ATVs for a long time.

1. Select an ATV for your child or teen that fits him or her both physically and mentally.

2. Use the speed limiter to allow the child or teen to develop skills at a controlled pace.

3. **ALWAYS** supervise your child or teen.

ATV models and their intended ages

ATV Model	Age (years)	Speed Range
Junior	6+	10 mph or less
Pre-teen	9+	10-15 mph
Teen	12+	15-30 mph
Adult	16+	Not restricted

I have read the information above and understand that the ATV I am about to buy is a

junior / pre-teen / teen model
(circle one)

intended for children ages _____ and older.

I also understand that other ATVs are available for children of different ages.

_____

Purchaser Signature Date (mm/dd/yyyy)

_____

Full name (please print)

TO BE COMPLETED BY DEALER

This form must be kept on file for 5 years and may be periodically reviewed by officials of the U.S. Consumer Product Safety Commission to ensure that ATV purchasers have been given this information.

_____

Vehicle VIN/PIN

FIGURE 3 Age Acknowledgment form

Figure 4 to Part 1515

ATV Training

ATVs are complex motor vehicles requiring skill to drive, and new ATV drivers[1] have the highest risk of injury. ATVs don't handle as you might expect - they don't behave like a dirt bike, motorcycle, or car.

The best way to become familiar with your ATV and learn about its special handling is to take an ATV training class.

FREE ATV training is available for you and your household when you purchase an ATV.

You wouldn't drive a car without having someone show you how to handle it. Come to a training class and learn how to drive your ATV!

I have read the information above and have been given a certificate that is good for one free training course for me and each member of my immediate household whom the ATV is age-appropriate.

Purchaser Signature Date (mm/dd/yyyy)

Full name (please print)

TO BE COMPLETED BY DEALER

This form must be kept on file for 5 years and may be periodically reviewed by officials of the U.S. Consumer Product Safety Commission to ensure that ATV purchasers have been given this information.

Vehicle VIN/PIN

[1] Those with less than one year of experience compared to those with multiple years of experience.

Figure 4 Training Acknowledgment Form

BILLING CODE 6355–01–C

Dated: August 1, 2006.

Todd Stevenson,

Secretary, Consumer Product Safety Commission.

[**NOTE:** The following appendix will not appear in the Code of Federal Regulations]

List of Relevant Documents

1. Briefing memorandum from Elizabeth Leland, Project Manager, Directorate for Economic Analysis, to the Commission, ''All-Terrain Vehicles: CPSC Staff Proposals for Consideration'' May 31, 2006.
2. Memorandum from Elizabeth W. Leland, Economic Analysis, CPSC, to Jacqueline Elder, Assistant Executive Director for Hazard Identification and Reduction, ''October 14, 2005, All-Terrain Vehicle (ATV) Advance Notice of Proposed Rulemaking (ANPR): CPSC Staff Response to Comments,'' May 23, 2006.
3. Report from Robin L. Ingle, Directorate for Epidemiology, Division of Hazard Analysis, CPSC, ''2004 Annual Report of ATV Deaths and Injuries,'' September 2005.
4. Memorandum from Terrance R. Karels, Directorate for Economic Analysis, CPSC, to Elizabeth W. Leland, EC, Project Manager, ATVs, ''Current Market Conditions—ATVs'', May 23, 2006.
5. Memorandum from Caroleene Paul, Division of Mechanical Engineering, Directorate for Engineering Sciences, CPSC, to Elizabeth Leland, Project Manager, ATV Safety Review Team, ''Draft Proposed Requirements for All-Terrain Vehicles (ATVs),'' May 23, 2006.
6. Memorandum from Hope E. Johnson, Engineering Psychologist, Division of Human Factors, Directorate for Engineering Sciences, CPSC, to Elizabeth Leland, Project Manager ATV Team, ''ATV Age Guidelines,'' May 23, 2006.
7. Memorandum from Sarah B. Brown, Engineering Psychologist, Division of Human Factors, Directorate for Engineering Sciences, CPSC, to Elizabeth Leland, Project Manager, ATV Project, ''ATV Lighting,'' May 22, 2006.
8. Report from Robert Franklin, Directorate for Economic Analysis, CPSC, ''All Terrain Vehicle Mandatory Standard: Preliminary Regulatory Analysis'', May 2006.
9. Report from Robert Franklin, Directorate for Economic Analysis, CPSC, ''All Terrain Vehicles: Initial Regulatory Flexibility Analysis,'' May 2006.
10. Memorandum from Timothy P. Smith, Engineering Psychologist, Division of Human Factors, Directorate for Engineering Sciences, CPSC, ''Minimum requirements for ATV hang tags, product labels, and manual warnings,'' May 23, 2006.
11. Memorandum from Timothy P. Smith, Engineering Psychologist, Division of Human Factors, Directorate for Engineering Sciences, CPSC, ''Recommended disclosure statement for adult-ATV purchasers,'' May 23, 2006.
12. Memorandum from Hope E. Johnson, Engineering Psychologist, Division of Human Factors, Directorate for Engineering Sciences, ''ATV Training,'' May 17, 2006.
13. Memorandum from Robin L. Ingle, Health Statistician, Hazard Analysis Division, Directorate for Epidemiology, CPSC, ''Explanation of Trained ATV Rider Risk Statement,'' April 11, 2006.
14. Memorandum from Tanya Topka, Compliance Officer, Recalls and Compliance Division, CPSC Office of Compliance, ''Three-Wheeled All-Terrain Vehicles,'' May 22, 2006.

[FR Doc. 06–6703 Filed 8–9–06; 8:45 am]

BILLING CODE 6355–01–P

Federal Register

Thursday,
August 10, 2006

Part III

Department of the Interior

Fish and Wildlife Service

50 CFR Parts 20 and 21

Migratory Bird Hunting and Permits; Regulations for Managing Resident Canada Goose Populations; Final Rule

DEPARTMENT OF THE INTERIOR

Fish and Wildlife Service

50 CFR Parts 20 and 21

RIN 1018–AI32

Migratory Bird Hunting and Permits; Regulations for Managing Resident Canada Goose Populations

AGENCY: Fish and Wildlife Service, Interior.

ACTION: Final rule and notice of record of decision.

SUMMARY: In recent years, the numbers of Canada geese that nest and/or reside predominantly within the conterminous United States (resident Canada geese) have undergone dramatic growth to levels that are increasingly coming into conflict with people and human activities and causing personal and public property damage, as well as public health concerns, in many parts of the country. In February 2002, the U.S. Fish and Wildlife Service (Service or ''we'') completed a Draft Environmental Impact Statement (DEIS) on resident Canada goose management. In August 2003, we published a proposed rule to establish regulations to implement the DEIS proposed action, Alternative F. In November 2005, the notice of availability for a Final Environmental Impact Statement (FEIS) was published, followed by a 30-day public review period. This final rule sets forth regulations for implementing the FEIS preferred alternative, Alternative F, which would authorize State wildlife agencies, private landowners, and airports to conduct (or allow) indirect and/or direct population control management activities, including the take of birds, on resident Canada goose populations. The Record of Decision (ROD) is also published here.

DATES: This final rule will go into effect on September 11, 2006.

ADDRESSES: The public may inspect comments received on the DEIS and the proposed rule during normal business hours in Room 4107, 4501 North Fairfax Drive, Arlington, Virginia. You may obtain copies of the FEIS from the above address or from the Division of Migratory Bird Management Web site at *http://migratorybirds.fws.gov.*

FOR FURTHER INFORMATION CONTACT: Brian Millsap, Chief, Division of Migratory Bird Management, or Ron Kokel (703) 358–1714 (see **ADDRESSES**).

SUPPLEMENTARY INFORMATION:

Authority and Responsibility

Migratory birds are protected under four bilateral migratory bird treaties the United States entered into with Great Britain (for Canada in 1916 as amended in 1999), the United Mexican States (1936 as amended in 1972 and 1999), Japan (1972 as amended in 1974), and the Soviet Union (1978). Regulations allowing the take of migratory birds are authorized by the Migratory Bird Treaty Act (16 U.S.C. 703–711), and the Fish and Wildlife Improvement Act of 1978 (16 U.S.C. 712). The Migratory Bird Treaty Act (Act), which implements the above-mentioned treaties, provides that, subject to and to carry out the purposes of the treaties, the Secretary of the Interior is authorized and directed to determine when, to what extent, and by what means it is compatible with the conventions to allow hunting, killing, and other forms of taking of migratory birds, their nests, and eggs. The Act requires the Secretary to implement a determination by adopting regulations permitting and governing those activities.

Canada geese are Federally protected by the Act by reason of the fact that they are listed as migratory birds in all four treaties. Because Canada geese are covered by all four treaties, regulations must meet the requirements of the most restrictive of the four. For Canada geese, this is the treaty with Canada. We have prepared these regulations compatible with its terms, with particular reference to Articles VII, V, and II.

Each treaty not only permits sport hunting, but permits the take of migratory birds for other reasons, including scientific, educational, propagative, or other specific purposes consistent with the conservation principles of the various Conventions. More specifically, Article VII, Article II (paragraph 3), and Article V of ''The Protocol Between the Government of the United States of America and the Government of Canada Amending the 1916 Convention between the United Kingdom and the United States of America for the Protection of Migratory Birds in Canada and the United States'' provides specific limitations on allowing the take of migratory birds for reasons other than sport hunting. Article VII authorizes permitting the take, kill, etc., of migratory birds that, under extraordinary conditions, become seriously injurious to agricultural or other interests. Article V relates to the taking of nests and eggs, and Article II, paragraph 3, states that, in order to ensure the long-term conservation of migratory birds, migratory bird populations shall be managed in accord with listed conservation principles.

The other treaties are less restrictive. The treaties with both Japan (Article III, paragraph 1, subparagraph (b)) and the Soviet Union (Article II, paragraph 1, subparagraph (d)) provide specific exceptions to migratory bird take prohibitions for the purpose of protecting persons and property. The treaty with Mexico requires, with regard to migratory game birds, only that there be a ''closed season'' on hunting and that hunting be limited to 4 months in each year.

Regulations governing the issuance of permits to take, capture, kill, possess, and transport migratory birds are promulgated in title 50, Code of Federal Regulations (CFR), parts 13 and 21, and issued by the Service. The Service annually promulgates regulations governing the take, possession, and transportation of migratory birds under sport hunting seasons in 50 CFR part 20.

Background

In recent years, numbers of Canada geese that nest and/or reside predominantly within the conterminous United States (resident Canada geese) have undergone dramatic growth to levels that are increasingly coming into conflict with people and causing personal and public property damage. We believe that resident Canada goose populations must be reduced, more effectively managed, and controlled to reduce goose-related damages. This rule would establish a new regulation authorizing State wildlife agencies, private landowners, and airports to conduct (or allow) indirect and/or direct population control management activities, including the take of birds, on resident Canada goose populations. The intent of this rule is to allow State wildlife management agencies and the affected public sufficient flexibility to deal with problems caused by resident Canada geese and guide and direct resident Canada goose population growth and management activities in the conterminous United States when traditional and otherwise authorized management measures are unsuccessful in preventing injury to property, agricultural crops, public health, and other interests.

Population Delineation and Status

Waterfowl management activities frequently are based on the delineation of populations that are the target of management. Some goose populations are delineated according to where they winter, whereas others are delineated based on the location of their breeding grounds. For management purposes, populations can comprise one or more species of geese.

Canada geese (*Branta canadensis*) nesting within the conterminous United States are considered subspecies or

hybrids of the various subspecies originating in captivity and artificially introduced into numerous areas throughout the conterminous United States. Canada geese are highly philopatric to natal areas, and no evidence presently exists documenting breeding between Canada geese nesting within the conterminous United States and those subspecies nesting in northern Canada and Alaska. Canada geese nesting within the conterminous United States in the months of March, April, May, or June, or residing within the conterminous United States in the months of April, May, June, July, and August will be collectively referred to in this rule as ''resident'' Canada geese.

The recognized subspecies of Canada geese are distributed throughout the northern temperate and sub-arctic regions of North America (Delacour 1954; Bellrose 1976; Palmer 1976). Historically, breeding Canada geese are believed to have been restricted to areas north of 35 degrees and south of about 70 degrees latitude (Bent 1925; Delacour 1954; Bellrose 1976; Palmer 1976). Today, in the conterminous United States, Canada geese can be found nesting in every State, primarily due to translocations and introductions since the 1940s.

The majority of Canada geese still nest in localized aggregations throughout Canada and Alaska and migrate annually to the conterminous United States to winter, with a few reaching as far south as northern Mexico. However, the distribution of Canada geese has expanded southward and numbers have increased appreciably throughout the southern portions of the range during the past several decades (Rusch *et al.* 1995). The following is a brief description of the status and distribution of the major management populations of Canada geese covered by this rule. (We note that there are a number of various surveys that utilize different methodologies, and resulting estimates can vary quite significantly between the various surveys and years. However, we believe all of the various data, when taken together, reinforce our conclusions).

In the Atlantic Flyway, the resident population of Canada geese nests from Southern Quebec and the Maritime Provinces of Canada southward throughout the States of the Atlantic Flyway (Sheaffer and Malecki 1998; Johnson and Castelli 1998; Nelson and Oetting 1998). This population is believed to be of mixed subspecies *(B. c. canadensis, B. c. interior, B. c. moffitti,* and *B. c. maxima*) and is the result of purposeful introductions by management agencies, coupled with released birds from private aviculturists and releases from captive decoy flocks after live decoys were outlawed for hunting in the 1930s. Following the Federal prohibition on the use of live decoys in 1935, Dill and Lee (1970) cited an estimate of more than 15,000 domesticated and semi-domesticated geese that were released from captive flocks. With the active restoration programs that occurred from the 1950s through the 1980s, the population grew to over 1 million birds and has increased an average of 2 percent per year since 1995 (Sheaffer and Malecki 1998; Atlantic Flyway Council 1999; U.S. Fish and Wildlife Service, 2004). In fact, 2005 spring surveys and estimates from the States of the Atlantic Flyway now total over 1.36 million geese, with a 3-year average of 1.32 million (U.S. Fish and Wildlife Service, unpublished data, 2006).

In the Mississippi Flyway, most resident Canada geese are giant Canada geese (*B. c. maxima*). Once believed to be extinct (Delacour 1954), Hanson (1965) rediscovered them in the early 1960s, and estimated the giant Canada goose population at about 63,000 birds in both Canada and the United States. In the nearly 40 years since their rediscovery, giant Canada geese have been reestablished or introduced in all Mississippi Flyway states. The breeding population of giant Canada geese in the Mississippi Flyway has exceeded 1.5 million individuals in recent years and has been growing at a rate of about 6 percent per year over the last 10 years (Rusch *et al.* 1996; Wood *et al.* 1996; Nelson and Oetting 1998; U.S. Fish and Wildlife Service, 2004). However, estimates resulting from spring breeding surveys have recessed slightly over the past 3 years and the latest 2005 spring surveys and estimates from the States of the Mississippi Flyway total about 1.25 million geese, with a 3-year average of 1.27 million (U.S. Fish and Wildlife Service, unpublished data, 2006).

In the Central Flyway, Canada geese that nest and/or reside in the States of the Flyway consist mainly of two populations, the Great Plains and Hi-Line. The Great Plains Population (Nelson 1962; Vaught and Kirsch 1966; Williams 1967) consists of geese (*B. c. maxima/B. c. moffiti*) that have been restored to previously occupied areas in Saskatchewan, North and South Dakota, Nebraska, Kansas, Oklahoma, and Texas. For management purposes, this population is often combined with the Western Prairie Population (composed of geese (*B. c. maxima/B. c. moffiti/B. c. interior*) that nest throughout the prairie regions of Manitoba and Saskatchewan) and winter together from the Missouri River in South Dakota southward to Texas. The Hi-Line Population (Rutherford 1965; Grieb 1968, 1970) (*B. c. moffitti*) nests in southeastern Alberta, southwestern Saskatchewan and eastern Montana, Wyoming, and northcentral Colorado. The population winters from Wyoming to central New Mexico. Overall, these populations of large subspecies of Canada geese have increased tremendously over the last 30 years as the result of active restoration and management by Central Flyway States and Provinces. The current index for these populations in 2004 was over 837,000 birds, and has been growing at a rate of 7 percent (Great Plains and Western Prairie Populations) and 4 percent (Hi-Line Population), per year since 1995 (Gabig 2000; U.S. Fish and Wildlife Service, 2004). Looking at only the geese in the U.S. portion of these populations, the current 2005 spring estimate is approximately 590,000 with a 3-year average of 540,000 geese (U.S. Fish and Wildlife Service, unpublished data, 2006).

In the Pacific Flyway, two populations of the western Canada goose, the Rocky Mountain Population and the Pacific Population, are predominantly composed of Canada geese that nest and/or reside in the States of the Flyway. The Rocky Mountain Population (*B. c. moffitti*) nests from southwestern Alberta southward through the intermountain regions of western Montana, Utah, Idaho, Nevada, Colorado, and Wyoming. They winter southward from Montana to southern California, Nevada, and Arizona. Highly migratory, they have grown from a breeding population of about 14,000 in 1970 (Krohn and Bizeau 1980) to over 130,000 (Subcommittee on Rocky Mountain Canada Geese 2000). The 2004 estimated spring population was 152,000 and has increased 3 percent per year over the last 10 years; however, the mid-winter survey estimates have shown no apparent trend since 1995 (U.S. Fish and Wildlife Service, 2004). The Pacific Population (*B. c. moffitti*) nests from southern British Columbia southward and west of the Rockies in the States of Idaho, western Montana, Washington, Oregon, northern California, and northwestern Nevada (Krohn and Bizeau 1980; Ball *et al.* 1981). They are relatively nonmigratory and winter primarily in these same areas. Reliable survey estimates are not available.

Flyway Management Plans and Population Goals

The Atlantic, Mississippi, Central, and Pacific Flyway Councils are administrative bodies established to

cooperatively deliver migratory bird management under the flyway system. The Councils, which comprises representatives from each member State and Province, make recommendations to the Service on matters regarding migratory game birds. The Flyway Councils work with the Service and the Canadian Wildlife Service to manage populations of Canada geese that occur in their geographic areas. Since there are large numbers of resident Canada geese in each Flyway, the Councils developed and prepared cooperative Flyway management plans to address these populations and establish overall population goals and associated objectives/strategies. A common goal among the plans is the need to balance the positive aspects of resident Canada geese with the conflicts they can cause. While the Flyway Council system is cooperative in nature, the Service does not formally adopt Flyway management plans. However, because the Flyway Councils and States are the most knowledgeable sources regarding the establishment of goose population goals and objectives under their purview, we have attempted to incorporate the goals and objectives of the Flyways'' resident Canada goose management plans and their associated objectives into this rule. A more detailed discussion of the Flyway management plans, their specific goals and objectives, is contained in the EIS described in the **ADDRESSES** section of this document.

As we stated earlier, the objective of this rule is to allow State wildlife management agencies, private and public landowners, and airports sufficient flexibility to deal with problems, conflicts, and damages caused by resident Canada geese and guide and direct resident Canada goose population growth and management activities in the conterminous United State when traditional and otherwise authorized management measures are unsuccessful in preventing injury to property, agricultural crops, public health, and other interests. The goal of the program established by this rule will contribute to human health and safety, protect personal property and agricultural crops, protect other interests from injury, and allow resolution or prevention of injury to people, property, agricultural crops, or other interests from resident Canada geese. Further, the program established by this rule is intended to be in accordance with the mission of the Service, effective, environmentally sound, cost-effective, and flexible enough to meet the variety of management needs found throughout the flyways and will not threaten viable resident Canada goose populations as determined by each Flyway Council and our obligations under the Act. Formulating such a national management strategy to reduce, manage, and control resident Canada goose populations in the continental United States and to reduce related damages, safety, and public health concerns was a complex problem, and Flyway input was essential for incorporating regional differences and solutions.

As such, we note that the overall population objectives established by the Flyways were derived independently based on the States'' respective management needs and capabilities, and in some cases, these objectives were an approximation of population levels from an earlier time when problems were less severe. In other cases, population objective levels were calculated from what was professionally judged to be a more desirable or acceptable density of geese with respect to conflicts. We further note that these population sizes are only optimal in the sense that it was each Flyway's best attempt to balance the many competing considerations of both consumptive (*i.e.*, hunters) and nonconsumptive (*i.e.*, bird watchers) users and those suffering economic damage. As with any goal or objective, we believe that these population objectives should be periodically reviewed and/or revised in response to changes in resident Canada goose populations, damage levels, public input, or other factors. Current resident Canada goose population estimates and population objectives for each Flyway are shown in Table 1. We note that over the most recent 3 years with complete estimates (2003–05), the total number of temperate-nesting Canada geese, or resident Canada geese, has averaged approximately 3.34 million in the United States and 1.37 million in Canada for a total spring population of 4.71 million (U.S. Fish and Wildlife Service, unpublished data, 2006). These estimates represent an increase in the average of approximately 150,000 geese in the United States (from 3.19 million) and 200,000 geese in Canada (from 1.17 million) from the 2000–02 average of 4.36 million. In fact, over the last six years, we estimate that U.S. populations have increased at an annual growth rate of 1.14 percent and Canada populations at 4.15 percent, resulting in an overall growth rate of 1.99 percent annually. The largest increases continue to be experienced in the States and Provinces of Atlantic Flyway, which increased from an average of 1.37 million for 2000–02 (1.15 million in the United States and 0.21 million in Canada) to 1.60 million for 2003–05 (1.32 million in the United States and 0.28 million in Canada).

TABLE 1.—RECENT RESIDENT CANADA GOOSE POPULATION ESTIMATES (2003–05 AVERAGE) AND POPULATION OBJECTIVES ON A FLYWAY BASIS

Current resident Canada goose population [a]	Atlantic Flyway	Mississippi Flyway	Central Flyway	Pacific Flyway
United States	1,324,261	1,277,804	540,723	199,011
Canada	284,422	225,571	452,578	413,743
Total	1,608,683	1,503,375	993,301	612,754

Resident Canada goose population objective	Atlantic Flyway [b]	Mississippi Flyway	Central Flyway [c]	Pacific Flyway
United States	620,000	949,000	368,833–448,833	[d] 54,840–90,900
Canada	30,000	180,000	.....	[d] 35,750–56,250
Total	650,000	1,132,000	.....	[d] 90,590–147,150

[a] Moser and Caswell, 2004.
[b] Atlantic Flyway Council Section 1999.
[c] Only U.S. States provided population objectives (Gabig 2000).

[d] Lower end of the Pacific Flyway population objective for the Pacific Population of Western Canada geese derived from ''Restriction Level'' and upper end derived from ''Liberalization Level'' as shown in *Management Plan for the Pacific Population of Western Canada Geese* (Subcommittee on Pacific Population of Western Canada Geese 2000). While the cited report refers to numbers of pairs, nests, and individual geese, the numbers shown here have been converted to numbers of individual geese.

Potential Causes of Population Growth and Past Attempts To Slow Growth

The rapid rise of resident Canada goose populations has been attributed to a number of factors. Most resident Canada geese live in temperate climates with relatively stable breeding habitat conditions and low numbers of predators, tolerate human and other disturbances, have a relative abundance of preferred habitat (especially those located in urban/suburban areas with current landscaping techniques), and fly relatively short distances to winter compared with other Canada goose populations. This combination of factors contributes to consistently high annual production and survival. Further, the virtual absence of waterfowl hunting in urban areas provides additional protection to those urban portions of the resident Canada goose population. Given these characteristics, most resident Canada goose populations are continuing to increase in both rural and urban areas.

In order to reduce injury from resident Canada geese, we have attempted to curb the growth of resident Canada goose populations by several means. Expansion of existing annual hunting season frameworks (special and regular seasons), the issuance of control permits on a case-by-case basis, and a Special Canada goose permit (see June 17, 1999, **Federal Register** (64 FR 32766) for further information) have all been used with varying degrees of success. While these approaches have provided relief in some areas, they have not completely addressed the problem.

Normally, complex Federal and State responsibilities are involved with Canada goose control activities. All control activities, except those intended to either scare geese out of, or preclude them from using, a specific area, such as harassment, habitat management, or repellants, require a Federal permit issued by the Service. Additionally, permits to alleviate migratory bird depredations are issued by the Service in coordination with the Wildlife Services program of the U.S. Department of Agriculture's Animal and Plant Health Inspection Service (Wildlife Services). Wildlife Services is the Federal agency with lead responsibility for dealing with wildlife damage complaints. In most instances, State permits are required as well.

Conflicts and Impacts

Conflicts between geese and people affect or damage several types of resources, including property, human health and safety, agriculture, and natural resources. Common problem areas include public parks, airports, public beaches and swimming facilities, water-treatment reservoirs, corporate business areas, golf courses, schools, college campuses, private lawns, athletic fields, amusement parks, cemeteries, hospitals, residential subdivisions, and along or between highways.

Property damage usually involves landscaping and walkways, most commonly on golf courses, parks, and waterfront property. In parks and other open areas near water, large goose flocks create local problems with their droppings and feather litter (Conover and Chasko, 1985). Surveys have found that, while most landowners like seeing some geese on their property, eventually, increasing numbers of geese and the associated accumulation of goose droppings on lawns, which results in a reduction of both the aesthetic value and recreational use of these areas, cause many landowners to view geese as a nuisance (Conover and Chasko, 1985).

Negative impacts on human health and safety occur in several ways. At airports, large numbers of geese can create a very serious threat to aviation. Resident Canada geese have been involved in a large number of aircraft strikes resulting in dangerous landing/take-off conditions, costly repairs, and loss of human life. As a result, many airports have active goose control programs. Excessive goose droppings are a disease concern for many people. Public beaches in several States have been closed by local health departments due to excessive fecal coliform levels that in some cases have been traced back to geese and other waterfowl. Additionally, during nesting and brood-rearing, aggressive geese have bitten and chased people and injuries have occurred due to people falling or being struck by wings.

Agricultural and natural resource impacts include losses to grain crops, overgrazing of pastures, and degrading water quality. In heavy concentrations, goose droppings can overfertilize lawns and degrade water quality, resulting in eutrophication of lakes and excessive algae growth (Manny et al., 1994). Overall, complaints related to personal and public property damage, agricultural damage, public safety concerns, and other public conflicts have increased as resident Canada goose populations have increased.

We have further described the various impacts of resident Canada geese on natural resources, public and private property, and health and human safety in our EIS on resident Canada goose management. Due to the volume of technical information, we refer the reader to the EIS for specific details. Procedures for obtaining a copy of the EIS are described in the **ADDRESSES** section of this document.

Environmental Consequences of Taking No Action

We fully analyzed the No Action alternative with regard to resident Canada goose management in our EIS, to which we refer the reader (U.S. Fish and Wildlife Service 2005). In summary, we expect that resident Canada goose populations will continue to grow. Within 10 years, populations could approach 1.37 million in the Atlantic Flyway (using a population of around 1 million) and 1.8 million in the Mississippi Flyway. Within 5 years, populations could reach 1.07 million in the Central Flyway and 309,000 in the Pacific Flyway. Additionally, resident Canada goose problems and conflicts related to goose distribution are likely to continue and expand. Resident Canada geese will continue to impact public and private property, safety, and health, and impacts are likely to grow as goose populations increase. Lastly, both Federal and State workloads related to dealing with these increasing conflicts and populations will also increase.

Environmental Consequences of the Selected Action

We fully analyzed our selected action in the EIS on resident Canada goose management, to which we refer the reader for specific details (U.S. Fish and Wildlife Service 2005). In summary, under our preferred alternative, entitled ''Integrated Damage Management and Population Reduction,'' we expect a reduction in resident Canada goose populations, especially in problem areas. We also expect significant reductions in conflicts caused by resident Canada geese; decreased impacts to property, safety, and health; and increased hunting opportunities. We expect some initial State and

Federal workload increases associated with implementation of the management strategies; however, over the long term, we expect that workloads would decrease. Lastly, we expect our action to maintain viable resident Canada goose populations.

Final Resident Canada Goose Regulations

Recently completed resident Canada goose modeling in Missouri (Coluccy 2000; Coluccy and Graber 2000), when extrapolated to the entire Mississippi Flyway, indicates that stabilization of the Mississippi Flyway's resident population at the current 1,582,200 geese would require one of several management actions: (1) The harvest of an additional 273,642 geese annually over that already occurring; (2) the take of 541,624 goslings per year; (3) a Flyway-wide nest removal of 338,630 nests annually; or (4) a combination of harvesting an additional 153,702 geese annually and the take of 203,719 goslings per year. Each of these management alternatives would be required annually for 10 years to overcome the current growth rates and stabilize the Flyway's population. Similar type numbers would be expected in the Atlantic and Central Flyway, while numbers would be correspondingly much smaller in the Pacific Flyway.

Thus, to merely stabilize the four Flyways' resident populations at the current level of approximately 3.68 million would require, at a minimum for the next 10 years, either the harvest of an additional 636,000 geese annually, the take of 1,258,000 goslings per year, a nation-wide nest removal of 787,000 nests annually, or a combination of the harvest of an additional 357,000 geese annually and the take of 473,000 goslings per year. While we realize that these numbers seem insurmountable and are simple extrapolations of one State-specific model (Missouri), we believe they are reliable enough to illustrate our point: The only way to possibly reduce injuries currently being caused by overabundant resident Canada geese is to utilize the abilities of airports, military airfields, private landowners, public land managers, agricultural producers, State wildlife agencies, and hunters and authorize them to address the problems and conflicts caused by resident Canada goose populations and to ultimately reduce populations. By addressing conflicts and population reductions on a wide number of available fronts, we believe the combination of various damage management strategies and population control strategies could successfully reduce numbers of resident Canada geese in specific problem areas and reduce or stabilize growth rates on a wider population-level scale. Since the States are the most informed and knowledgeable local authorities on wildlife conflicts in their respective States, we believe it is logical and proper to authorize them particularly to take adult resident Canada geese that they determine are responsible for injuries.

To give States the needed flexibility to address the problems caused by resident Canada geese, this rule would establish regulations consisting of three main program components. The first component would consist of four specific control and depredation orders (Airports, Nests and Eggs, Agricultural, and Public Health) designed to address resident Canada goose depredation, damage, and conflict management. These actions could be conducted by the appropriate State wildlife agency, U.S. Fish and Wildlife Service or other official agent (such as the U.S. Department of Agriculture's Wildlife Services), or in some cases, landowners and airport managers. The control and depredation orders would be for resident Canada goose populations only and, as such, could only be implemented between April 1 and August 31, except for the take of nests and eggs which could be implemented in March.

The second component would provide expanded hunting methods and opportunities to increase the sport harvest of resident Canada geese above that which results from existing September special Canada goose seasons. This component would provide new regulatory options to State wildlife management agencies and Tribal entities by authorizing the use of additional hunting methods such as electronic calls, unplugged shotguns, and expanded shooting hours (one-half hour after sunset) during existing, operational September Canada goose seasons (i.e., September 1–15). Utilization of these additional hunting methods during any new special seasons or other existing, operational special seasons (i.e., September 15–30) could be approved by the Service and would require demonstration of a minimal impact to migrant Canada goose populations. These seasons would be authorized on a case-by-case basis through the normal migratory bird hunting regulatory process. All of these expanded hunting methods and opportunities under Special Canada goose hunting seasons would be in accordance with the existing Migratory Bird Treaty frameworks for sport hunting seasons (i.e., 107-day limit from September 1 to March 10) and would be conducted outside of any other open waterfowl season (i.e., when all other waterfowl and crane hunting seasons were closed).

The third component would authorize the Director to implement a resident Canada goose population control program, or management take (defined as a special management action that is needed to reduce certain wildlife populations when traditional and otherwise authorized management measures are unsuccessful, not feasible for dealing with, or applicable, in preventing injury to property, agricultural crops, public health, and other interests from resident Canada geese). Following the conclusion of the first full operational year of this rule, any wildlife agency from a State or Tribe in the Atlantic, Mississippi, and Central Flyway could request approval for this population control program. A request must include a discussion of the State's or Tribe's efforts to address its injurious situations utilizing the methods approved in this rule or a discussion of the reasons why the methods authorized by these rules are not feasible for dealing with, or applicable to, the injurious situations that require further action. Discussions should be detailed and provide the Service with a clear understanding of the injuries that continue, why the authorized methods utilized have not worked, and why methods not utilized could not effectuate resolution of the injuries. We note that a State's request for approval may be for an area or areas smaller than the entire State. Following receipt and review of the State's request, the Director may or may not authorize implementation of a managed take program in the State in question.

Management take would enable States and Tribes to use hunters to harvest resident Canada geese, by way of shooting in a hunting manner, during the August 1 through August 31 period. The intent of the program is to reduce resident Canada goose populations in order to protect personal property and agricultural crops, protect other interests from injury, resolve or prevent injury to people, property, agricultural crops, or other interests from resident Canada geese, and contribute to potential concerns about human health when all other methods fail to address, or are not feasible for dealing with, or applicable to, the injuries caused by resident Canada geese. States and Tribes would be required to designate participants operating under the conditions of the management take program and keep annual records of

activities carried out under the authority of the program. Additionally, participating States and Tribes would be required to monitor the spring breeding population by providing an annual estimate of the breeding population and distribution of resident Canada geese in their State in order to assess population status.

We would annually assess the overall impact and effectiveness of the management take program on resident Canada goose populations to ensure compatibility with long-term conservation of the resource and its effect on injuries from resident Canada geese. If at any time evidence is presented that clearly demonstrates that a resident Canada goose population no longer needs to be reduced in order to allow resolution or prevention of injury to people, property, agricultural crops, or other interests, we would suspend the program for the resident Canada goose population in question. However, resumption of injuries caused by growth of the population in question and not otherwise addressable by the methods in this rule could warrant reinstatement of the program to control the population. Depending on the location of the injury or threat of injury, it is possible that a management take program could be in effect for one or more resident Canada goose populations, but not others.

Overall, the management take component, the expanded hunting methods and opportunities component, and the agricultural depredation order would be restricted to the States of Alabama, Arkansas, Colorado, Connecticut, Delaware, Florida, Georgia, Illinois, Indiana, Iowa, Kansas, Kentucky, Louisiana, Maine, Maryland, Massachusetts, Michigan, Minnesota, Mississippi, Missouri, Montana, Nebraska, New Hampshire, New Jersey, New Mexico, New York, North Carolina, North Dakota, Ohio, Oklahoma, Pennsylvania, Rhode Island, South Carolina, South Dakota, Tennessee, Texas, Vermont, Virginia, West Virginia, Wisconsin, and Wyoming. Only State wildlife agencies and Tribal entities in these States could authorize the use of these components for resident Canada geese in the Atlantic, Central, and Mississippi Flyway portions of these States.

In addition to the three main new components, we would continue the use of special and regular hunting seasons, issued under 50 CFR part 20, and the issuance of depredation permits and special Canada goose permits, issued under 50 CFR 21.41 and 21.26, respectively.

Changes From the Proposed Rule

Administration and Organization of Proposed Action

To better relate the goals and objectives of the overall program, we separated the program into two main areas: depredation/damage/conflict management and population reduction/control. The depredation/damage/conflict management objective is addressed through the various specific depredation orders. The population reduction/control objective is addressed through the other two main components of the program: the increased hunting methods and opportunities and the managed take component. We believe this reorganization makes the entire program better understood and administratively better organized.

Further, we have clarified that the third component of the program, the management take component, is intended as a method to address injury from resident Canada geese when other methods have failed to do so (see further discussion below under *Population Control/Reduction Components*).

Airport Control Order

We have removed the Airport Control Order from under the State's direct control for implementation and made it a stand-alone control order, *i.e.*, under our direct control and supervision. The State would continue to have the legal ability to impose either further State restrictions on the program if they so wish or decline participation of airports in their State. As with all Federal regulations, the State may always be more restrictive. We believe the issues surrounding public safety at airports and military airfields warrant this administrative change. The State will not have to expend resources monitoring and administrating this element of the program and the change further sets the stage for either adding additional species to the control order (should they be warranted) or doing an airport control order that encompasses all migratory bird species.

Second, we have added military airfields to the Airport Control Order. Military airfields are a significant component of the Nation's overall air traffic and warrant inclusion in any resident Canada goose airport control program.

Nests and Egg Depredation Order

Similar to the Airport Control Order, we have removed the Nest and Egg Depredation Order from under the State's direct control for implementation and made it a stand-alone depredation order, i.e., under our direct control and supervision. The State would continue to have the legal ability to impose either further State restrictions on the program if they so wish or decline participation of private landowners and public land managers in their State. As with all Federal regulations, the State may always be more restrictive. We believe the large number of existing nest and egg permits, the minimal amount of environmental review currently being conducted, and the potential increased burden of placing the administration of this program with the State warrant this administrative change. The State will not have to expend resources reviewing, monitoring, and administrating this element of the program. Since significant numbers of comments both from the States and numerous nongovernmental organizations centered on the States having to assume control of this issue and possibly issue permits, our decision to make it a stand-alone depredation order under our direct control should alleviate those concerns.

Public Health Control Order

Under the proposed Public Health Control Order, the authority to conduct management and control activities was entrusted with the State, County, municipal, or local public health agency if the State decided to implement the Public Health Control Order component. We realize that most authorized management activities would not be conducted by the public health agency but would likely be conducted by the State wildlife agency, Wildlife Services, or a private contractor. We have removed the public health agency as the primary implementing entity and have identified the State wildlife agency (or their agent) as the implementing entity as long as the State, County, or local health agency recommends management action.

Further, resident Canada geese eligible for management actions must pose a direct threat to human health. A direct threat to human health is defined as one where a Federal, State, or local public health agency has determined that resident Canada geese pose a specific, immediate human health threat because of conditions conducive to the transmission of human or zoonotic pathogens. Situations where resident Canada geese are merely causing a nuisance would not be eligible.

Population Control/Reduction Components

With the administrative reorganization of the overall program, the changes made to the control and depredation orders, and our

reevaluation of the existing Special Canada Goose Permit (50 CFR 21.26), we have eliminated the State agency population control component within the proposed rule. Our reason in doing so was our belief that this component, outside of the management take component, was largely duplicative of already authorized management activities contained in the existing Special Canada Goose Permit.

Currently 18 States are operating under the Special Canada Goose Permit (Colorado, Delaware, Georgia, Illinois, Indiana, Iowa, Kansas, Michigan, Minnesota, Missouri, Nebraska, New York, North Dakota, Ohio, Oklahoma, South Dakota, Virginia, and Wyoming). The number of States operating under this permit has grown steadily since its inception in 1999. As recently as 2000, only five States were operating under the special permit (Michigan, Minnesota, Missouri, Ohio, and South Dakota) with no States in the Atlantic Flyway. The increased use of this permit, along with the some of the overlapping aspects of the Special Canada Goose Permit with our proposed rule's State population control component, confirm our belief that this component should be eliminated.

We have, however, retained the management take component with some modification and clarification as to when it takes effect or is implemented. Based on comments we received, there were some questions as to when this component could be implemented. The management take component is intended as a method to address injury from resident Canada geese only when other methods have failed to do so. Under this component as modified, the Director, after finding that traditional and otherwise authorized management measures are unsuccessful, not feasible for dealing with, or applicable, in preventing injury to property, agricultural crops, public health, and other interests from resident Canada geese may authorize States and Tribes to implement a managed take program to remedy these injuries by issuance of an Order. While the management take component is dependent on implementation and regulation by the State or Tribe, it is not solely a State-conducted management activity, like the State population control component was in the proposed rule. Further, the management take component remains dependent on State surveys and will be the first component to be eliminated once the population reaches a level that its use is no longer necessary to reduce injuries. We continue to believe that if a State desires to address injuries via management take, it should be incumbent on them to provide additional population status information since this component is a more broad-based management action.

Pacific Flyway

We have dropped participation and applicability of States in the Pacific Flyway from some program components in the final rule. The Pacific Flyway Council and Pacific Flyway States have consistently commented that they do not wish to participate in any new regulations and that they do not have the same resident Canada goose problems that the rest of the country, in particular the eastern and Great Lakes regions of the United States, currently is experiencing. From a population status information standpoint, evidence warranting inclusion in the proposed alternative was somewhat ambiguous in the Pacific Flyway, other than specific localized instances. The Pacific Flyway generally lacks good resident goose breeding and population surveys, numbers of geese are not as significant as other parts of the country, and the problems/issues/conflicts are more isolated and localized. Thus, we have dropped the States of the Pacific Flyway from all components except the Nest and Egg Depredation Order, the Public Health Control Order, and the Airport Control Order. Based on comments and our analysis, we believe the agricultural depredation issue in the Pacific Flyway is primarily a migrant Canada goose issue, not a resident Canada goose issue.

Management Take in September

In the proposed rule, we had proposed the use of management take during the first 15 days of September. We have eliminated that provision in this final rule. Traditionally, we have used special Canada goose seasons in September to target resident goose populations and address some of the conflicts and problems caused by overabundant resident Canada geese. The primary issue with extending a management take type action into September is that we know some migrant geese in some areas will be taken. In particular, areas in the upper midwest (Michigan, Wisconsin, Minnesota, North Dakota, South Dakota, and Montana) would have some level of migrant geese taken. Our information is based on studies these States conducted on their existing September special Canada goose seasons. However, we note that all areas in question fall within the existing special September Canada goose season criteria of less than 10 percent migrant geese. Since the management take component, as is the entire scope of the rule, is specifically directed at resident Canada geese, we cannot reliably extend this component into September.

Tribal Entities

Beginning with the 1985–86 hunting season, we have employed guidelines to establish special migratory game bird hunting regulations on Federal Indian reservations (including off-reservation trust lands) and ceded lands. These guidelines were developed in response to tribal requests for recognition of their reserved hunting rights, and for some tribes, recognition of their authority to regulate hunting by both tribal and nontribal members throughout their reservations. The guidelines apply to those Tribes having recognized reserved hunting rights on Federal Indian reservations (including off-reservation trust lands) and on ceded lands. They also apply to establishing migratory bird hunting regulations for nontribal members on all lands within the exterior boundaries of reservations where Tribes have full wildlife management authority over such hunting or where the Tribes and affected States otherwise have reached agreement over hunting by nontribal members on lands owned by non-Indians within the reservation. Because of the ongoing relationship we enjoy with the participating tribes (approximately 30 annually), and their full wildlife management authority on tribal lands, we have decided to include their participation in several of the program components. More specifically, tribal eligibility under the specific depredation and control orders and the management take component is included in this rule. Currently, there are approximately 13 tribes participating in the Atlantic, Mississippi, and Central Flyways.

References

A complete list of citation references is available upon request from the Division of Migratory Bird Management (see **ADDRESSES**).

Public Comments and Responses to Significant Comments

On March 1, 2002 (67 FR 9448), the Environmental Protection Agency published a Notice of Availability of our DEIS. On March 7, 2002 (67 FR 10431), we published our own Notice of Availability of the DEIS. We published a Notice of Meetings on the DEIS on March 26, 2002 (67 FR 13792). Initial comments were accepted until May 30, 2002. We subsequently published another Notice of Availability reopening the comment period on August 21, 2003 (68 FR 50546). Also on August 21, 2003,

we published a proposed rule regarding control and management of resident Canada goose populations (68 FR 50496). Comments were accepted on both the DEIS and the proposed rule until October 20, 2003.

We received public comments on the DEIS from 2,657 private individuals, 33 State wildlife resource agencies, 37 nongovernmental organizations, 29 local governments, 5 Federal or State legislators, 4 Flyway Councils, 4 Federal agencies, 3 tribes, 3 businesses, and 2 State agricultural agencies. Of the 2,657 comments received from private individuals, 56 percent opposed the preferred alternative and supported only nonlethal control and management alternatives, while 40 percent supported either the proposed alternative or a general depredation order.

We received 2,973 public comments on the proposed rule from 2,925 private individuals, 17 State wildlife resource agencies, 15 nongovernmental organizations, 4 Flyway Councils, 1 Federal agency, 8 agricultural interests, and 3 others. Of the 2,925 comments received from private individuals, 95 percent supported the use of nonlethal control and management alternatives. Sixty-eight percent supported the use of lethal methods where nonlethal methods have failed or where ''true'' human safety threats exist. Most of the comments from individuals were either submitted via email or computer-generated form letters.

We considered all comments. Below, we provide our responses to comments on the proposed rule. Further, because of the highly interrelated public processes with the DEIS, FEIS, and the proposed rule, as an aid to the reader, we have in large part replicated comments we received on the DEIS and our responses contained in the November 2005 FEIS. In some instances to avoid duplicative answers, we refer the reader to previous responses.

Comments on the DEIS

(1) Why didn't the Service select Alternative A (No Action) as the preferred alternative/proposed action?

In recent years, it has become clear from public and professional feedback that the status quo is not adequately resolving resident Canada goose conflicts for many stakeholders or reducing the population. Furthermore, our environmental analysis indicated that growth rates were more likely to be reduced and conflicts were more likely to be resolved under other options than under Alternative A.

(2) Why didn't the Service select Alternative B (nonlethal control and management) as the preferred alternative/proposed action?

In the wildlife management field, the control of birds through the use of humane, but lethal, techniques can be an effective means of alleviating resource damages, preventing further damages, and/or enhancing nonlethal techniques. It would be unrealistic and overly restrictive to limit a resource manager's damage management methods to nonlethal techniques, even if ''nonlethal'' included nest destruction and/or egg oiling. Lethal control techniques are an important, and in many cases necessary, part of a resource manager's toolbox. Further, in this instance, our analysis indicates that the use of only non-lethal control and management techniques would not result in reaching our overall objectives.

(3) Why didn't the Service select Alternative C (nonlethal control and management with permitted activities) as the preferred alternative/proposed action?

Our analysis indicated that under Alternative C population growth would continue and be more pronounced than under the No Action alternative. Further, our analysis indicated no real appreciable advantage of this alternative over Alternative B (nonlethal control and management) other than the permitted take of nests and eggs.

(4) Why didn't the Service select Alternative D (expanded hunting methods and opportunities) as the preferred alternative/proposed action?

We did select Alternative D, only we combined the components of Alternative D with other components into our selected Alternative F. Selecting only Alternative D would not have resulted in meeting our overall objectives.

(5) Why didn't the Service select Alternative E (control and depredation order management) as the preferred alternative/proposed action?

We did select Alternative E, only we combined the components of Alternative E with other components into our proposed Alternative F. Selecting only Alternative E would not have resulted in meeting our overall objectives.

(6) Why didn't the Service select Alternative G (general depredation order) as the preferred alternative/proposed action?

Environmentally, the impacts under Alternative G were similar to those under our selected alternative, Alternative F. However, practically and administratively the impacts are much different. Under Alternative G, the State would not be a primary decision maker regarding resident Canada goose management in their State, unless they decided on their own to become involved. We continue to believe that this alternative would not be in the best interest of either the resource or the affected entities. Management of resident Canada geese should be a cooperative effort on the part of Federal, State, and local entities, especially those decisions involving the potential take of adult geese. These decisions, regardless of population status, should not be taken lightly. Further, these actions warrant adequate oversight and monitoring from all levels to ensure the long-term conservation of the resource. To do otherwise, we believe, would be an abrogation of our and the State's responsibility.

(7) In the DEIS, did the Service consider a range of reasonable alternatives?

Yes. We selected the seven alternatives in the DEIS based on the public scoping period and NEPA requirements. The alternatives adequately reflected the range of public comments and represented what we considered to be all reasonable alternatives. Alternatives we considered but eliminated from analysis are discussed in the EIS. Comments received during scoping are discussed in ''Scoping/Public Participation Report for Environmental Impact Statement on Resident Canada Goose Management'' (Appendix 8 of the FEIS).

(8) Why didn't the Service more fully consider the option of removing resident Canada geese from the list of birds protected under the Migratory Bird Treaty Act?

In our view, this is not a ''reasonable alternative.'' Canada geese have been protected under the MBTA since the original treaty was signed with Canada in 1916. Seeking to remove resident Canada geese from MBTA protection would not only be contrary to the intent and purpose of the original treaties, but would require amendment of the original treaties—a lengthy process requiring approval of the U.S. Senate and President and subsequent amendments to each treaty by each signatory nation. At this time, there appears to be adequate leeway for managing resident Canada goose conflicts within the context of their MBTA protection, retaining MBTA protection for this component of the overall population. We believe this

approach is neither practical nor in the best interest of the migratory bird resource.

(9) Why doesn't the Service just allow resident Canada goose populations to regulate themselves?

Available information indicates that goose populations would continue to grow in most areas until they reach, or exceed, the carrying capacity of the environment. Further, given the relative abundance and stability of breeding habitat conditions, the birds' tolerance of human disturbance, their ability to utilize a wide range of habitats, and their willingness to nest in close proximity to other goose pairs, we believe it likely that resident Canada geese will remain significantly below their carrying capacity. While we generally agree that, at some future point, it is possible that density-dependent regulation of the population would occur, the timing, likelihood, and scale of a population decline of this nature is unpredictable. Thus, conflicts are likely not only to continue, but increase, under the No Action alternative. Therefore, because the injuries form geese in an ever-expanding population would increase in occurrence, we do not believe that we, the States, the affected parties, or the general public, can afford to allow resident Canada goose populations to regulate themselves.

(10) Doesn't the selected alternative violate the Migratory Bird Treaty Act by abrogating the Federal role in managing migratory birds?

No, it is an exercise of the authority of the MBTA. First of all, Alternative F (the preferred alternative) by no means puts an end to the Federal role in migratory bird management. The conservation of migratory bird populations is and will remain the Service's responsibility. Second, while the MBTA gives the Federal Government (as opposed to individual States) the chief responsibility for ensuring the conservation of migratory birds, this role does not preclude State involvement in management efforts. Bean (1983) described the Federal/State relationship as such:

> It is clear that the Constitution, in its treaty, property, and commerce clauses, contains ample support for the development of a comprehensive body of federal wildlife law and that, to the extent such law conflicts with state law, it takes precedence over the latter. That narrow conclusion, however, does not automatically divest the states of any role in the regulation of wildlife or imply any preference for a particular allocation of responsibilities between the states and the federal government. It does affirm, however, that such an allocation can be designed without serious fear of constitutional hindrance. In designing such a system, for reasons of policy, pragmatism, and political comity, it is clear that the states will continue to play an important role either as a result of federal forbearance or through the creation of opportunities to share in the implementation of federal wildlife programs.

Nowhere in the MBTA is the implementation of migratory bird management activities limited to the Federal Government. In fact, the statute specifically gives the Secretary of the Interior the authority to determine when take of migratory birds may be allowed and to adopt regulations for this purpose. In accordance with the Act, we are adopting regulations that are compatible with the applicable Conventions (Treaty).

(11) Is the level of analysis conducted in the DEIS sufficient according to the requirements of the National Environmental Policy Act? Did the Service properly evaluate the environmental impacts of the selected action?

Yes on both counts. The analysis included, as required by NEPA, a discussion of the environmental impacts associated with the various alternatives, unavoidable adverse environmental effects associated with the selected action, the relationship between short-term uses and long-term productivity, and any irreversible or irretrievable commitments of resources associated with the selected action. New information since publication of the DEIS was used to augment the discussion in the FEIS.

(12) In violation of the National Environmental Policy Act, has the Service ''failed to justify the purpose and need for action''?

No. NEPA does not require ''justification,'' but instead requires that the purpose and need for the action be identified. As stated in 43 CFR 1502.1, the purpose of an EIS is ''to serve as an action-forcing device to insure that the policies and goals defined in the Act are infused into the ongoing programs and actions of the Federal Government.'' We are confident that we fulfilled this purpose in the DEIS and FEIS.

(13) Did the Service fail to disclose or evaluate the environmental impacts of the selected action on threatened or endangered species?

No. In the DEIS, the Service listed species that ''may be affected'' by resident Canada goose management as a precursor to its completion of the Section 7 consultation. The consultation evaluated any impacts on listed species and was completed for the FEIS.

(14) Isn't the selected alternative essentially an ''unfunded mandate'' for the States?

No. The selected alternative is not a requirement being forced upon the States (or any other agency) by the Federal Government. The decision ultimately lies with individual States to choose whether or not to act under the authorizations in the regulations. It will be up to them to decide whether resident Canada goose control and population reduction is a high enough priority within their budget allocation processes.

(15) Were public comments fairly and completely considered?

Yes. As documented in the public scoping report, all comments, written and verbal, received during the scoping period were fully considered in determining the scope of issues and the range of alternatives addressed in the DEIS. We also full considered all the comments received on the DEIS and responded to them in the FEIS.

(16) Is there sufficient evidence to justify the selected action?

What constitutes ''sufficient'' evidence to justify resident Canada goose control is, to a certain extent, a question of values. Among all stakeholders concerned with resident Canada goose management, we can safely say that there is considerable disagreement over whether or not the selected action is justified (with many even arguing that the selected action does not go far enough). The Service and Wildlife Services, as the lead and cooperating agencies in the EIS process, jointly agree that we have sufficient evidence to justify the selected action of impacts from goose/human conflicts and the probability that these impacts would continue to increase.

(17) Will the Service remain the lead agency in overseeing resident Canada goose control and management efforts?

Certainly. We fully understand the necessity and legal obligation to retain national control of resident Canada goose populations and, therefore, of any resident Canada goose management program, especially one that authorizes States, other agencies, and public and private entities to conduct control activities without a Federal permit. While the selected alternative gives States and other entities more authority to decide when to conduct resident Canada goose control, we will retain our oversight role in order to keep track of

resident Canada goose management activities, their effectiveness, and their continuing need in light of Canada goose population management from a national perspective. The selected alternative is by no means intended to inhibit regional or national coordination of resident Canada goose management activities.

(18) Will the Service provide funding to agencies that carry out resident Canada goose management under the selected alternative?

We currently have no plans to fund other agencies or entities. However, in our Congressional budget request, we have asked for increased financial resources to implement the selected action. This figure specifically includes money that could be used in cooperative efforts with States and other agencies to conduct resident Canada goose management, research, and monitoring.

(19) How will the Service ensure that resident Canada goose populations remain healthy and sustainable?

There are a number of methods that, collectively, the Service can use to keep track of the status of resident Canada goose populations. Population monitoring is the best means for understanding changes in a species population over time. Along with the various State wildlife agencies and the Canadian Wildlife Service, the Service annually monitors resident Canada goose populations. In addition, the Service will be able to estimate both take and harvest, via reporting requirements, and will keep track of how many resident Canada geese are taken under authority of the various control and depredation orders. We will also continue to support and be involved in research efforts. The Service will use the information it develops and receives to make decisions regarding the need to make changes to the take authorizations.

(20) Will the Service provide more detail in the FEIS on monitoring and population survey requirements? Will the Service establish guidelines for agencies to use in population monitoring?

No, because we do not believe that this level of detail is necessary. While we understand the importance of uniformity in data collection, we have to consider other factors as well. We want agencies to monitor populations and adequately report results from management actions on resident Canada geese, but we don't want the requirements to do so to be cost prohibitive or burdensome. They only need to be sufficient to allow us to conduct proper oversight. In addition, because resident Canada geese are a game species, the Service and the States already have in place annual monitoring programs (in particular, nationwide harvest monitoring and widespread population monitoring) that provide both a historical data base as well as future annual data.

(21) What does the Service plan to do to educate the public about resident Canada geese?

We have prepared fact sheets for public distribution. Information about resident Canada geese is available at our Web site *http://migratorybirds.fws.gov/issues*. Our intention is to distribute fact sheets on the various control and depredation orders and the other components of the selected alternative in the near future.

(22) Will agencies or other entities acting under the various control and depredation orders in the selected alternative be authorized to designate agents?

Yes, as long as the ''agents'' abide by the purpose, terms, and conditions of the order.

(23) Will State oversight be preserved under the selected alternative?

Yes, in addition to complying with the Federal rules, any agency or agent acting under the selected alternative must follow all applicable State laws. For example, if a State permit is required to authorize a particular control activity, such permit must be obtained before that activity can be conducted.

(24) Will the Service more clearly describe allowable control activities in the FEIS/final rule?

Yes. Management activities authorized under the selected action are clearly stated in this rule.

(25) Will the Service clarify the procedures by which an agency's or other entity's authority to act under the selected alternative would be revoked?

Yes, this rule reflects this clarification.

(26) Is the selected action the most cost effective management alternative?

In selecting the preferred alternative, we based our decision on many considerations, only one of which was cost effectiveness. However, this is a cost-effective alternative, although probably not significantly more or less so than other alternatives.

(27) How can the Service be sure that increased control under the selected action will result in alleviation of conflicts?

No one can predict with 100 percent accuracy that the selected action will alleviate all conflicts; indeed, we don't expect the selected action to alleviate all conflicts. Our analysis indicates that the selected action is highly likely to alleviate many of the impacts associated with resident Canada geese, especially over the long-term.

(28) How will the Service keep track of geese killed under the selected alternative?

Recording and reporting requirements are directly tied to the various control and depredation order components and the other components of the selected action. The Service will prepare reports on a regular basis summarizing activities under the selected alternative.

(29) Does the Service have the resources to properly implement the selected action?

The selected action is not particularly resource intensive as far as the Service itself is concerned. We anticipate that current staff in the migratory bird program will be able to handle the activities associated with the selected action.

(30) Has the Service based its management decisions on scientific evidence? Does the selected action have a sound scientific foundation?

Yes. We believe that we have sufficient biological and economic evidence regarding the injuries caused by resident Canada geese to support this method of addressing the problem and to support this action.

(31) Is the Service authorizing greater control just to appease public outcry?

No, we are authorizing greater control to try to minimize resident Canada goose conflicts, prevent injury, and address their impacts more effectively, to reduce population growth rates and populations, and to allow other agencies and entities more flexibility in dealing with goose conflicts.

(32) Is it right to kill birds that may have come to be a problem due to human activities (*e.g.*, destruction of habitat, reintroduction of species, current habitat management practices, etc.)?

Right or wrong, in this case, appears to be a matter of perspective. Attitudes about the ethics of wildlife damage management, however, vary widely, often depending on the individual's proximity to the problem. Our role is to

address injuries caused by geese while ensuring that resident Canada goose populations remain healthy.

(33) Is the role of Wildlife Services as a ''cooperating agency'' appropriate?

Yes. As explained in the FEIS, Wildlife Services plays an important role in the management of resident Canada goose damages, especially to agricultural resources, airports and military airfields, and suburban/urban areas. The Council on Environmental Quality NEPA guidelines state that ''any other Federal agency which has special expertise with respect to any environmental issue may be a cooperating agency.''

(34) Isn't the selected action merely an attempt on the part of the Service to ''pass the buck'' of resident Canada goose management on to the States?

No. As we were considering options for addressing resident Canada goose injuries and population management more effectively, it became clear that, since many conflicts tend to be localized in nature, a sensible and flexible solution was to authorize local agencies more authority to take action to control resident Canada geese when circumstances warrant it. States are major contributors to the conservation of American fish and wildlife resources. Further, in this final rule, in large response to comments from State agencies, we have lessened the impact of the selected alternative on the States by removing the airport and nest and egg control and depredation orders from their responsibility and by removing the Pacific Flyway States from the agricultural depredation order, the expanded hunting methods component, and the management take component of the proposed alternative.

(35) By controlling resident Canada geese, isn't the Service dealing with a symptom rather than the underlying causes?

Numerous deterrents, including both legal and logistical, prevent us from changing the entire American landscape to make it less desirable for resident Canada geese. We do acknowledge that controlling resident geese while their environmental needs (*e.g.*, food and habitat) remain abundant might be seen by some as being a ''bandage'' approach. However, we are also implementing other program components designed to reduce resident Canada goose populations on a larger scale in addition to focusing on the alleviation of local damages.

(36) Isn't it archaic to allow the killing of a species simply because certain people find it to be a nuisance?

We allow killing of resident Canada geese only when they are associated with a specific problem, not because they are considered a pest or a nuisance.

(37) Isn't the real problem here humans and, therefore, it is people who are in need of ''management,'' not resident Canada geese?

The answer depends on what exactly is meant by ''people management.'' Certainly, among the broad range of stakeholders, there is a need to promote a better understanding of the biological and sociological complexities associated with resident Canada goose management.

(38) Resident Canada goose population reduction is necessary.

We agree. Current populations, especially in the Atlantic and Mississippi Flyways, are well above Flyway-established population goals and continue to grow. While we acknowledge that growth rates have subsided in recent years, total population numbers are such that conflicts and injuries continue to occur and show little likelihood of lessening on their own accord.

(39) States should not be given authority to manage resident Canada geese.

We disagree. The Service is authorizing States and other affected publics to take geese in certain circumstances but retains the authority and management responsibility. Certainly, States, because of their intimate knowledge of local conflicts, issues, and problems, are the logical choice to make specific, local-based decisions on resident Canada goose management activities within the requirements and limitations in the regulation. The Service will maintain primary authority over nests and egg removal activities and airport activities and will maintain oversight authority on all other activities that participating States decide to implement.

(40) Reducing goose populations is not the same as reducing damages.

We agree, and we have attempted to address the overall problem on several fronts. The selected alternative addresses the depredation/damage/conflict management issue through the first component of the alternative—the various control and depredation orders contained in Alternative E—Control and Depredation Order Management. The population reduction/control objective is addressed through the other two main components of the alternative to justify the selected action: the increased hunting methods available in Alternative D and the management take component. In concert, we believe that the various components will serve both objectives.

(41) The Flyway Council's population objectives are arbitrary.

We disagree. The Atlantic, Mississippi, Central, and Pacific Flyway Councils are administrative units for migratory bird management in the flyway system and comprise representatives from member States and Provinces. The Flyway Councils work cooperatively with the Service and the Canadian Wildlife Service to manage populations of Canada geese that occur in their geographic areas. As such, it should be remembered that the overall population objectives established by the Flyways were derived independently based on the States' respective management needs and capabilities, and in some cases, their objectives are an approximation of population levels from an earlier time when problems were less severe. In other cases, objectives are calculated from what is professionally judged to be a more desirable or acceptable density of geese. We further note that these population sizes are only optimal in the sense that it is each Flyway's best attempt to balance the many competing considerations of both consumptive (i.e., hunters) and nonconsumptive (i.e., bird watchers) users and those suffering injuries. However, a commonality among the various plans' goals is the need to balance the positive aspects of resident Canada geese with the injuries they can cause. Thus, we have incorporated Flyway population objectives into the FEIS to help define our objectives for acceptable management measures.

(42) The Service should develop a more integrated, community-based, scientifically sound approach to managing goose problems.

We believe that our selected alternative is integrated (three main components), community-based (local-based decision in large part), and scientifically sound (preponderance of available evidence).

(43) Goose conflicts are primarily an aesthetic concern.

We disagree. To those agricultural producers experiencing depredation from resident Canada geese and those airports experiencing goose-aircraft strikes, the injuries are very real and substantial. Further, in those areas where excessive numbers of geese have

caused substantial economic damages, the injuries are very real. Lastly, in those areas where the public has substantial concerns over potential health threats, the injuries are real. While we recognize that many people do not experience any impacts from resident Canada geese, substantial numbers of people and other entities are experiencing very real problems.

(44) Using human health as an excuse to kill geese is unsubstantiated.

Although the human health and safety risks associated with resident Canada geese are controversial and difficult to quantify, we believe that available data clearly indicates the raised level of public concern and the potential health issues associated with resident Canada geese.

While we agree that the risk to human health from pathogens originating from geese is currently believed to be low, we are only beginning to understand these risks. There is a general perception among the public and a concern among resource management personnel that resident Canada geese do have the ability to transmit diseases to humans, but a direct link is difficult to establish due to the expense of testing and the difficulty of tracing the disease back to Canada geese. Studies have confirmed the presence of human pathogens in goose feces, so the presence of these feces in water or on the ground where humans may come into contact with them is a legitimate health concern. The Service and the various State natural resource agencies do not have the expertise to deal with the myriad human health/disease questions surrounding resident Canada geese in every specific instance, and therefore, must rely on other more pertinent agencies. We acknowledge that additional research is needed to assist in the quantification and understanding of these issues and concerns. However, we believe that increasingly large populations of geese, especially in high concentration areas, only serve to increase the uncertainty associated with these risks. Given the wide divergence of opinion within the public health community, the Service and Wildlife Services have recognized and deferred to the authority and expertise of local and State health officials in determining what does or does not constitute a direct threat to public health. We believe this is appropriate.

(45) The killing of Canada geese is philosophically wrong and is ''inhumane'' treatment of these birds. Further, nonlethal solutions to all resident Canada goose/human conflicts are preferred and people need to be more tolerant of wildlife. Removal of geese under these management actions is only a short-term solution.

We are also opposed to the inhumane treatment of any birds, but do not believe the capture and relocation, or processing for human consumption, of resident Canada geese from human conflict areas is by definition ''inhumane.'' Over the past few years, States have rounded up thousands of problem resident Canada geese and relocated them to unoccupied sites. However, few, if any, such unoccupied sites remain. Therefore, we believe that humane lethal control of geese is an appropriate part of an integrated resident Canada goose damage and control management program and ultimately a population reduction program.

We also prefer nonlethal control activities, such as habitat modification, as the first means of eliminating resident Canada goose conflict and damage problems and have specified language to this effect in this final rule. However, habitat modification and other harassment tactics do not always work satisfactorily and lethal methods are oftentimes necessary to increase the effectiveness of nonlethal management methods.

There are many situations where resident Canada geese have created injurious situations and damage problems that few people would accept if they had to deal directly with the problem situation. We continue to encourage State wildlife management agencies to work with not only the local citizens impacted by the management actions but all citizens. While it is unlikely that all resident Canada goose/human conflicts can be eliminated in all urban settings, implementation of broad-scale, integrated resident Canada goose management activities should result in an overall reduced need for other management actions, such as large-scale goose round-ups and lethal control.

(46) The rule will make individual States more vulnerable to legal challenges.

We disagree. The conservation of migratory bird populations is and will remain the Service's responsibility. Under the selected alternative, the Service would maintain primary authority for the management of resident Canada geese, but the individual States would be authorized to implement certain provisions of the alternative within guidelines established by the Service.

(47) The Service should take the lead role in resident Canada goose management. The proposed rule removes the Service as a full partner in goose management and establishes it as an enforcement agency.

The Service will retain the lead role in resident Canada goose management. We disagree with the assertion that our selected alternative removes the Service as a full partner in goose management and merely establishes us as an enforcement agency. We fully understand the necessity of retaining national oversight of resident Canada goose populations. While the selected alternative authorizes States and other entities to conduct resident Canada goose control when certain circumstances occur, we will retain our oversight role in order to keep track of resident Canada goose management activities from a national perspective. However, since the States are the most informed and knowledgeable local authorities on wildlife conflicts in their respective States, we believe it is logical to place some of the responsibilities and decisions of the program with them, in particular those portions of the program that involve the take of adult geese. We do not see this as the removal of the Service as a ''full partner.''

(48) The Service should hold additional public meetings.

We held 9 public scoping meetings and 11 public comment meetings on the DEIS across the country. We believe that we have adequately fulfilled our responsibilities under NEPA.

(49) The selected alternative is too heavily focused on lethal management. Nonlethal methods combined with public education can resolve goose problems as workable nonlethal solutions exist.

We disagree. As we stated in our response to question #2, the control of birds through the use of humane, but lethal, techniques can be an effective means of alleviating resource damages, preventing further damages, and/or enhancing nonlethal techniques. We reiterate that it would be unrealistic and overly restrictive to limit a resource manager's damage management methods to nonlethal techniques, even if ''nonlethal'' included nest destruction and/or egg oiling. Lethal control techniques are an important, and in many cases necessary, part of a resource

manager's tool box. Further, our analysis indicated that under a nonlethal alternative (such as Alternative B or C), population growth would continue and be more pronounced than under the No Action alternative.

(50) The FEIS should maintain the Flyway system of population management of resident Canada geese, allowing cooperative Flyway actions. Populations should not be dealt with on a State-by-State basis.

We believe the FEIS's selected alternative does maintain and respect the Flyway system of population management. It uses the Flyways' established goals and objectives for resident Canada geese as the determining basis for population targets. However, because the overwhelming majority of resident Canada goose conflicts occur within the State in which the geese reside (rather than a State they may be migrating through or into), the logical place both to deal with these conflicts and direct population reduction activities is within the residing State. Thus, a State-by-State approach, integrated within the overall Flyway approach, is needed.

(51) Problems with local resident Canada goose flocks may require control measures regardless of the status of a State's flock or the Flyway population.

We agree that, regardless of the overall population status, conflicts will likely continue to occur at some level in some areas. Thus, the various control and depredation orders contained in Alternative F are not strictly driven by the population status but are subject to annual review and determination of continued need in order to resolve or prevent injury to people, property, agricultural crops, or other interests.

(52) There needs to be more discussion of Wildlife Services' role in managing resident Canada geese.

The Wildlife Services program is directed by law to protect American agriculture and other resources from damage associated with wildlife. Wildlife Services' mission is to ''provide leadership in wildlife damage management in the protection of America's agricultural, industrial and natural resources, and to safeguard public health and safety.'' As such, Wildlife Services is the lead Federal agency on matters relating to wildlife damage management, and their role in the management of resident Canada geese relates primarily to damage management, including damage abatement. We rely on Wildlife Services' expertise to evaluate the various damage management strategies analyzed in the FEIS and to make recommendations on the specific deployment of the selected alternative. Further, we envision that Wildlife Services will be an integral and valuable cooperator, given their expertise, with participating State agencies, airports, agricultural producers, public health agencies, private landowners, and public land managers on the actual on-the-ground implementation of the selected alternative. The role of Wildlife Services should not be confused with the Services' role of monitoring the status of the various resident Canada goose populations to ensure the long-term conservation of the resource.

(53) The first level of population control for resident Canada geese should be through sport harvest. Thus, allowing the greatest amount of latitude for States to use hunters to help manage State flocks should be a primary objective.

We agree and, to date we have largely relied on that premise to address growing populations of resident Canada geese through the use of special early and late seasons. However, it has become readily apparent that sport harvest alone has not been able to adequately control resident Canada goose populations. We believe that, by implementation of a management take program and by expanding hunting methods during special early seasons, we are utilizing hunters to help reduce populations of resident Canada geese and allowing the States sufficient latitude to do so.

(54) The September 15 framework end date for the Management Take Program should be later, and expanded hunting methods should be allowed anytime in September.

We disagree. First, as we discussed in the FEIS, traditionally we have used special Canada goose seasons in September to specifically target resident goose populations and address some of the conflicts and problems caused by overabundant resident Canada geese. The primary issue with extending a management-take type action into September is that we know some migrant geese in some areas would be taken. In particular, areas in the upper midwest (Michigan, Wisconsin, Minnesota, North Dakota, South Dakota, and Montana) would have some level of migrant geese taken. Since the management take component, as with the entire scope of the EIS, is specifically directed at resident Canada geese, we cannot reliably extend this component into September. Second, the needs of this management problem require that extraordinary measures be implemented. However, we believe that caution should be exercised to ensure that other migratory game bird populations are not impacted by such measures. As such, we have eliminated the management take component from any portion of the open Treaty period (after August 31) and limited the use of expanded hunting methods to September 1 to 15. Based on data from the numerous experimental September Canada goose seasons conducted in the early implementation of these seasons, we know that the period after September 15 is highly temporally and spatially variable on whether or not a specific area contains migrant geese (either appreciable numbers or an appreciable percentage). Because of the potential for these expanded methods to significantly affect harvest, we believe that the use of these methods of take (*i.e.*, electronic calls, unplugged shotguns, and the allowance of shooting hours to one-half hour after sunset) should be limited to the extent possible to those areas that are relatively ''free'' of migrant geese. Thus, initially, we will restrict the use of these new methods to the September 1 to 15 period and review their use after September 15 on a case-by-case basis.

(55) Each Flyway Council (not the Service) should determine the appropriate dates for the Management Take program.

If the Flyway Councils wish to make recommendations to their member States on the Flyway-appropriate dates for the management take component, we have no issue with that process. However, as the agency responsible for the management of resident Canada geese under the MBTA, the Service is the appropriate entity for establishing when this may be utilized and the outer frameworks (August 1 to 31) for this new action.

(56) Language in the final rule should clarify that days available for use in the Management Take Program are outside of and in addition to the 107 days allowed by the Migratory Bird Treaty.

Since the management take program, if authorized by the Director, can occur only from August 1 to 31, before the Treaty's established sport hunting season, any days under the management take program are outside the Treaty's allowance of a maximum 107-day sport hunting season.

(57) The study requirements for extending the management take program past September 15 should be eliminated for mid-latitude and southern States since evidence already exists that few migrant geese are present.

Following initial implementation of the selected alternative and the associated expanded hunting methods during the September special seasons (September 1 to 15), we will evaluate the September 15 restriction on a case-by-case basis. We realize that some mid-latitude and southern areas are relatively free of migrant geese well past September 15. However, we believe that caution is the prudent path.

Regarding the management take program, we have decided to restrict that program to the month of August.

(58) Alternative methods of take within the management take frameworks should be allowed including the use of snares, nets, and entanglement devices.

Since the management take program would use hunters as the primary designated agents, we do not believe it is appropriate to allow the use of non-traditional hunter-based harvest tools (*e.g.*, nets, snares, etc.) during this period. However, States are generally free to use these management tools under the existing Special Canada Goose Permit, and Wildlife Services normally uses such methods under their permits. Further, any entity could continue to apply for a permit to use such methods in management activities. Such requests would be evaluated on a case-by-case basis.

(59) Any consideration of suspending the Management Take option should occur at the statewide level (not at a finer scale).

We agree to a point. Any evaluation of the management take program will occur on a Statewide level at a minimum. We believe it is highly unlikely we would be able to evaluate on a finer scale. However, we believe it is highly likely that there may be instances where certain program components, including the management take component, would be utilized in some areas of a State and not others.

(60) The FEIS should not authorize electronic calls, unplugged shotguns, and longer shooting hours.

We disagree. The objective of reducing the resident Canada goose population to levels more in-line with the Flyway Councils' established goals and objectives requires extraordinary measures. Currently available harvest and population data clearly indicate that current harvest is not able to significantly impact resident Canada goose population growth rates on other than a local scale. We estimate that the additional use of these methods during the September special seasons could increase harvest by at least 25 percent, or an additional 140,000 geese annually. We believe that implementation of these new hunting methods will help contribute to the overall program's objective of stabilizing and reducing resident Canada goose populations.

(61) Individuals should be allowed to dispose of birds so that human consumption of geese will be maximized instead of birds being wasted.

We agree and have clarified the restrictions regarding the disposal of birds in this final rule.

(62) The DEIS underestimates cost and personnel needs of States to implement the proposed program, as such the FEIS should attempt to quantify projected costs of implementing the rule's provisions and identify federal sources of funding to offset those costs. The proposed program is a huge financial burden for the States.

We have revised the FEIS to reflect both updated costs and administrative changes to the selected alternative since the DEIS. We believe they are an accurate reflection of anticipated costs.

(63) The selected alternative mostly just transfers the permitting and reporting paperwork to the States. The Service should allow States the latitude to address their problems as needed, without creation of an immense workload.

We are not obligating States to participate in this new program or to impose new restrictions to gain regulatory authority of a Federally authorized activity (i.e., nest and egg removal). States may continue to handle injurious goose situations with the current permitting system on a case-by-case basis or they may opt to participate in any component of the new program. The decision is entirely up to individual States.

(64) The requirement for States to conduct annual estimates of the breeding population and statewide distribution is unnecessary and also redundant to existing monitoring and evaluation tools currently in place. States should not have to conduct highly precise population estimates. Trend data should be adequate.

We disagree. The take of resident Canada geese under the management take component of the overall program is an extraordinary step in the effort to control and reduce resident Canada goose populations in order to ultimately reduce injuries. Thus, we believe it is incumbent upon those participating States to carefully monitor both goose populations and take of geese under the program.

(65) Given the overabundance of resident Canada geese, micromanagement and detailed reporting of authorized activities is not necessary. The final rule should have less recordkeeping conditions for States and other agencies.

We do not believe our required recordkeeping and reporting constitute micromanagement. Information specific to the management activities conducted under the selected alternative is vital to the overall evaluation of the program. However, we have scaled-back, reduced, or eliminated many aspects of the activity reporting. For instance, most of the control and depredation order participants will operate under a logbook requirement with reduced information rather than requiring a specific instance report. The reporting requirements are essential for us to be able to monitor actions and assess possible impacts to the population.

(66) The Service should provide resources to expand the May Breeding Waterfowl Survey to States that don't currently participate.

We have requested additional funding to help States implement surveys.

(67) Airport operations should not have to consider nonlethal harassment methods first as such methods dangerously put geese in flight.

Nonlethal harassment methods are an integral part of any integrated damage management program. As such, we have clarified in the final rule that airports, as other authorized entities, should use nonlethal goose management tools to the extent they deem appropriate (given the specific circumstances). Further, to minimize lethal take, authorized entities will have to implement all appropriate nonlethal management techniques in conjunction with authorized take.

(68) We see little need for different date restrictions for the different management components.

The removal of nests and eggs is a much different management activity than the removal of adult geese. Resident Canada geese are nesting in some areas of the country in March with most nesting occurring in April. Migrant geese, however, are still present in many areas of the country in March and linger

in northern areas until April. Because of this nesting activity and because of the potential take of migrant geese, we have decided to establish differential time constraints on the various control and depredation orders. We view these constraints as necessary safeguards for migrant populations.

(69) A component that combines Management Take with a General Depredation Order is needed.

As we discuss in Question #6, environmentally, the impacts under the Alternative G—General Depredation Order were similar to those under our selected alternative, Alternative F. However, practically and administratively the impacts are much different. Under Alternative G, the State would be virtually eliminated from decisions regarding resident Canada goose management, unless they decided on their own to become involved. We believe that this alternative would not be in the best interest of either the resource or the affected entities. Management of resident Canada geese should be a cooperative effort on the part of Federal, State, and local entities, especially those decisions involving the potential take of adult geese. Further, these actions warrant adequate oversight and monitoring from all levels to ensure the long-term conservation of the resource. A ''management take'' component would not be consistent with the general workings of Alternative G.

(70) Other hunting should be allowed to continue during the resident Canada goose management take provision and the expanded hunting methods period, especially if the State opts not to allow expanded methods during the management take period.

Like the light goose conservation order, the needs of this management problem require that extraordinary measures be implemented and caution be exercised to ensure that other migratory game bird populations are not impacted by such measures. As such, we have eliminated the management take component from any portion of the open season Treaty period (after August 31). Thus, allowing other migratory bird hunting seasons to be open during the management take period is now a moot point. Further, closure of crane and other waterfowl hunting seasons during the expanded hunting methods period (September 1 to 15) will eliminate or greatly reduce the possibility of increased harvest due to the use of new methods of take, such as electronic calls, unplugged shotguns, and the allowance of shooting hours to one-half hour after sunset. Although some harvest opportunity on other species will be lost in some instances (because of this need to have other seasons closed during these special expanded hunting methods period), we believe that the need to reduce the resident Canada goose population outweighs this loss.

(71) The stringent oversight and reporting requirements of the management take component (formerly known as the conservation order in the DEIS) are an unnecessary burden on States choosing to participate. Harvest estimates should be derived from the Harvest Information Program (HIP).

Information on hunter participation, methods used, and resident Canada goose harvest is critical for conducting a proper evaluation of the effectiveness of the management take program. There are several reasons why HIP cannot be utilized to estimate these parameters. In order to utilize HIP to estimate resident Canada goose harvest before September 1, the duration of the HIP sampling period would need to be greatly expanded. By doing so, response rates from all migratory game bird hunters will decrease, and memory bias will increase. This will negatively impact the precision and accuracy of not only resident Canada goose estimates, but estimates for all migratory game bird species, including ducks and other goose species. We do not believe the substantial negative impact to HIP estimates of duck and other goose harvest can be justified for the sake of obtaining information on management take harvest. To avoid negative impacts to HIP estimates of other migratory game bird species, a separate resident Canada goose harvest survey could be conducted. However, the current HIP sampling frame is very large and a separate Federal survey would require large sample sizes to ensure that adequate numbers of management take participants were contacted, which is cost-prohibitive. A solution would be to implement a separate Federal resident Canada goose permit to create a sampling frame that would be used to generate harvest estimates. However, the permit would have to be enforced in order to ensure that the sample frame contained all participants. If the sample frame was incomplete, the management take estimates would be biased low. Enforcement and administration of a uniform Federal permit would be difficult. For example, States that participate in the light goose conservation order either have implemented their own permit, or they sample State duck stamp purchasers in order to obtain harvest estimates. We believe States are better equipped to develop harvest surveys tailored specifically to the management take program in their State.

(72) Tribes should be treated the same as State wildlife agencies under the selected alternative.

We have added Tribes as specifically being eligible to conduct resident Canada goose management activities under the selected alternative's management take component, the expanded hunting opportunities component, and the agricultural depredation order. They are ineligible, as are State wildlife agencies, under the airport control order. Under the nest and egg depredation order, Tribes are treated the same as all other entities. Under the public health control order, we will continue to rely on the public health agency to make the determination that there is a direct threat to public health.

(73) Under the Service's Native American Policy and Executive Orders of the President of the United States, the Service is compelled to consult with Tribal governments on a government-to-government basis.

The Service has a long history of working with Native American governments in managing fish and wildlife resources (USFWS 1994). A list of Native American tribal governments was obtained through our Tribal liaison and was used to distribute the DEIS to tribal governments for formal review and comment.

(74) It is unfortunate that the Service is entirely dependent on revenues from the sale of hunting permits and hunting paraphernalia. The resulting extreme bias of this agency is therefore obvious to anyone who cares to take a closer look.

The Service operates its programs with funds appropriated by Congress. It does not receive operational funds from the sale of hunting permits or licenses or hunting paraphernalia. There is no Federal hunting permit that is sold to generate revenues upon which the Service relies. Revenue from sales of State hunting permits goes to State fish and wildlife agencies and not the Service. Furthermore, the Service is not dependent on revenues of hunting paraphernalia. Federal excise taxes collected on the sale of hunting equipment under the Federal Aid in Wildlife Restoration Act is returned to State fish and wildlife agencies in the form of grants to undertake projects that benefit a variety of wildlife species and receipts from the sale of Federal duck

stamps is used to acquire land for wildlife. Therefore, the Service has not developed an extreme bias towards hunting interests due to a dependency on hunting permit revenues.

(75) The Service reports that six times as many people participate in non-hunting activities related to migratory birds as compared to hunting them. Times have changed and so must the Service and wildlife agencies.

First of all, this is not a hunting program, it is a wildlife management action designed to minimize impacts from these birds. We examined socioeconomic considerations in the FEIS and reported that more citizens participate in non-hunting than hunting activities related to migratory birds. However, the impacts of resident Canada goose populations negatively affect a variety of entities, including non-hunters as well as hunters. Furthermore, the fact that many citizens do not hunt does not negate the fact that hunting and take by hunters is a legitimate wildlife management tool.

(76) Clearly the best option is to have the sportsmen harvest the overabundance of resident Canada geese. This method will come at no cost to the taxpayers, is extremely effective, and will help reduce the population.

One component of our preferred alternative established regulations that will allow citizens to increase their harvest of resident Canada geese.

(77) The entire concept and definition of ''resident'' Canada geese is invalid.

We disagree. Data clearly points out that Canada goose populations do nest in parts of the conterminous United States during the spring and summer and that these birds are increasingly causing injury to people and property. Furthermore, we are not redefining what is or is not a migratory bird under the Treaties and the MBTA. Canada geese are clearly protected by the Treaties and the MBTA and will continue to be. We are using the term ''resident'' to identify those commonly injurious Canada geese that will be the subject of permitted control activities within the scope of the Treaties and the MBTA.

Comments on the Proposed Rule

(1) Resident goose management action needs to be taken.

We agree. See our response to DEIS comment #38.

(2) Do not transfer management authority to the States. Maintain federal responsibility and leadership or actions will be open to legal challenges.

We are not transferring management authority to the States. However, States, because of their intimate knowledge of local conflicts, issues, and problems, are the logical choice to take specific, local-based actions on resident Canada goose management activities within the requirements and limitations in the regulation. The Service will maintain primary authority over nest and egg removal activities and airport activities and will maintain oversight authority on all other activities that participating States decide to implement.

Regarding legal challenges, the conservation of migratory bird populations is and will remain the Service's responsibility. Under the program, the Service will maintain primary authority for the management of resident Canada geese, but the individual States would be authorized to implement certain actions within our guidelines.

(3) Proposed options result in too much record keeping and reporting requirements for the States. Further, the overall process is too burdensome.

We disagree. See our response to DEIS comment #65.

(4) No additional surveys are needed as there is enough survey data already available. HIP or other existing data can be used.

See our response to DEIS comments #64, #65, and #71 and Proposed Rule (PR) comment #2.

(5) We agree with giving States authority to manage geese, but the Service must stay involved as a full federal partner with lead responsibility.

See our response to DEIS comment #47.

(6) The provisions of the proposed rule results in an unfunded mandate, therefore, the Service should provide funding support to the States to implement the proposal.

We disagree. See our response to DEIS comment #14.

(7) Amend the provision to extend sport harvest to end of September.

See our response to DEIS comment #54.

(8) Allow States to make the maximum use of hunters, by expanding all sport harvest methods and opportunities. Further, remove all restrictions to the use of decoys, calls, etc.

We largely agree and have attempted to remove those restrictions we view as an impediment to increasing the harvest of resident Canada geese during special seasons. However, we do not believe that it would be prudent, wise, or in the best interest of the migratory bird resource, to remove all hunting restrictions. See our response to DEIS comment #53.

(9) Adjust the different management options available so that they all have the same beginning and ending dates.

We have established what we believe are the most liberal timeframes available for all the various management actions given other resources (i.e., other Federally-protected species) and public concerns. See our response to DEIS comment #68.

(10) Set no date restriction for egg/nest destruction, allow year-round opportunity.

We see no reason for year-round egg and nest removal and destruction, as resident Canada geese only nest once per year.

(11) Amend language to maximize geese taken to be used for human consumption, not burying/incinerating.

See our response to DEIS comment #61.

(12) Base resident goose management on Flyway programs.

We believe the final rule does maintain the Flyway system of population management. It utilizes the Flyways' established goals and objectives for resident Canada geese as the determining basis for population targets. However, because the overwhelming majority of resident Canada goose injuries occur within the State the geese reside in (rather than a State they may be migrating through or into), the logical place to both deal with these conflicts and direct population reduction activities is within the residing State. Thus, a State-by-State approach, integrated within the overall Flyway approach, is needed.

(13) Streamline the process by merging the various depredation orders into a single Federal Depredation Order. As written, the menu of options cannot be implemented by the States without agreeing to implement the first option.

We have changed the final rule to streamline the process. Based on

comments we received, States are no longer responsible for implementation of the nest and egg depredation order or the airport control order unless they choose to do so. Further, we have removed the requirement in question.

(14) Nonlethal techniques should be emphasized to the maximum extent possible and use of lethal tools minimized.

See our response to DEIS comment #45.

(15) Develop more educational material.

We believe educational materials have their place, and we will continue to develop and distribute them to those that desire. However, educational materials are only one tool available, and their contribution can vary widely given the particulars of the individual situation or problem.

(16) Extend special late seasons to mid/late February.

The Flyway Councils and Service have developed criteria for special late seasons. However, given the time and spatial mixing of the various resident and migrant Canada goose populations, extension of special late Canada goose seasons is not always possible or advisable. We will continue to review requests for such on a case-by-case basis.

(17) Don't hold the southern and mid-latitude States (where there are no migrant geese) to the same time period requirements as northern States.

See our response to DEIS comment #57.

(18) Do not expand hunting into September.

We agree and have eliminated the Management Take component from the month of September. See our response to DEIS comment #54.

(19) Lethal methods should be emphasized for airport work.

See our response to DEIS comment #67.

(20) Extend the time period for implementing the airport depredation order and the 3-mile limit.

Since the scope of this assessment and final rule only covers resident Canada geese, we do not believe it is appropriate to expand either the time period or scope of the airport control order. Goose problems and conflicts outside the scope of the FEIS and final rule will continue to be handled by the current permitting process.

(21) The 1-year recordkeeping of requirement for the agriculture depredation order should be expanded to 3 years.

We agree, and this final rule reflects a 3-year timeframe.

(22) The term ''adversely affect'' used in § 21.61(e) in the proposed rule needs to be clearly defined.

We have further detailed the restrictions pertaining to endangered or threatened species within each regulatory section.

(23) The regulatory language does not address subpopulations.

We have separated the various populations into the smallest units we believe necessary to address the various goose conflicts and issues. We realize, however, that there will always be instances where these regulations may not be the best solution for the problem, such as that involving an isolated conflict. In those instances, the use of Federal permits would be advisable.

(24) Restrict the use of allowable hunting methods such as calls, unplugged guns, etc.

We realize that there are those who believe that we have unnecessarily liberalized the allowable hunting methods, and therefore sacrificed hunting ethics in our perceived shortsightedness. However, given the extraordinary circumstances of these populations, the many challenges of reducing the populations on a national scale, and the Flyways' and our long-range population goals, we have expanded the allowable hunting methods to the extent we believe necessary to help assist in reducing resident Canada goose populations. Once we have attained these objectives, we will initiate action to rescind these liberalizations. See also our response to DEIS comment #60.

(25) The rulemaking violates both the spirit and the letter of the MBTA. The Service is seeking to abrogate their responsibility under the MBTA by giving too much authority to the States and creating de facto unregulated take.

We disagree. See our response to DEIS comment #10.

(26) The rule is arbitrary and capricious.

We disagree. Data clearly points out that the Canada goose populations in question are increasingly causing injury to people and property. Furthermore, Canada geese are clearly protected by the Treaties and the MBTA and will continue to be under this final rule. We are merely implementing a range of management actions to help reduce the current population to more manageable levels and to help alleviate injurious situations caused by resident Canada geese.

(27) Any long-term solutions to the goose problem must be ecologically based, not as currently proposed.

Barring all other factors and considerations, a strictly ecologically-based solution would be best. However, we cannot overlook the important sociological aspects of the issue and injuries. Further, we believe that our actions are integral to reducing the populations to a more ecologically and socially balanced level.

(28) The use of integrated nonlethal management methods have proved successful and should be emphasized.

We agree. However, we believe that our selected alternative is integrated (three main components). Further, we believe that both lethal and nonlethal control of geese are appropriate parts of an integrated resident Canada goose damage and control management program and ultimately a population reduction program. While we also prefer nonlethal control activities, such as habitat modification, as the first means of eliminating resident Canada goose conflict and damage problems, habitat modification and other harassment tactics do not always work satisfactorily and lethal methods are oftentimes necessary to increase the effectiveness of nonlethal management methods.

There are many situations where resident Canada geese have created injurious situations and damage problems that few people would accept if they had to deal directly with the problem situation. We will continue to encourage State wildlife management agencies to work with not only the local citizens impacted by the management actions but all citizens. While it is unlikely that all resident Canada goose/human conflicts can be eliminated in all urban settings, implementation of broad-scale, integrated resident Canada goose management activities should result in an overall reduced need for other management actions, such as large-scale goose round-ups and lethal control.

(29) There is no scientific support for the health hazard attributed to geese.

See our response to DEIS comment #44.

(30) There are no studies that show that complaints are valid or that killing/reducing resident geese populations would address those complaints.

We disagree. We realize that there is considerable disagreement over whether or not this action is justified, but many have argued that this action does not go far enough. However, the Service and Wildlife Services, as the lead and cooperating agencies in the EIS process, jointly agree that there is sufficient evidence of impacts from goose/human conflicts and the probability these impacts will continue to increase to justify the selected action. Further, no one can predict with 100 percent accuracy that the selected action will alleviate all impacts or injuries, but our analysis indicates that this action is highly likely to alleviate many of the impacts associated with resident Canada geese, especially over the long-term.

(31) The Service is unable to distinguish between a migrant goose or a resident goose.

See our response to DEIS comment #77.

(32) The rulemaking fails to establish the criteria for designating ''seriously injurious.''

We disagree. The FEIS contains sufficient biological and economic evidence regarding the injuries to justify resident Canada goose control and to support this action.

(33) The regulatory process and content contained no mechanism for input from citizens.

We disagree. We held 9 public scoping meetings and 11 public comment meetings on the DEIS across the country. Further, we received 2,777 public comments on the DEIS and 2,973 public comments on the proposed rule. We believe we have adequately fulfilled our responsibilities under NEPA.

(34) Killing methods allowed by this rulemaking are inhumane.

See our response to DEIS comment #45.

(35) The DEIS inadequately supports the proposed regulations.

We disagree. See our responses to DEIS comments #11, #12, and #16.

(36) The monitoring and reporting requirements described are lacking in content and adequacy.

We disagree. All the monitoring and reporting requirements are designed to supply us with the level of information necessary to manage these populations.

(37) The depredation orders for airports, public health, and agriculture are adequate for good management.

We agree. However, we believe they are only one component of an overall strategy.

(38) Flyway Council population objectives for use in establishing management goals are arbitrary.

We disagree. See our response to DEIS comment #41.

(39) The States lack funding to implement the provisions suggested by the Service.

See our responses to DEIS comments #14 and #18.

(40) The population estimates used by the Service for resident geese are not based on good science.

We disagree. We realize that a number of surveys use different methodologies and resulting estimates can vary quite significantly between the surveys and years. However, we believe all of the data, when taken together, not only reinforce our position that resident populations are continuing to grow, but provide strong evidence that these populations need to be reduced.

(41) The take of goslings should not be allowed, only the take of eggs.

While we realize some consider the take of nests and eggs as nonlethal management, we view the take of goslings as no different than the take of adults, and technically, the take of eggs. All are prohibited by the various treaties and the MBTA, unless specifically allowed through regulation or permit.

(42) The Service should set statewide management objectives.

Statewide management objectives are contained in the various Flyway management plans. We do not believe it is within our purview to establish these individual State management goals, but the Flyways established the overall population based on the States' respective management needs and capabilities. In some cases, objectives were calculated from what was professionally judged to be a more desirable or acceptable density of geese. These population sizes are only optimal in the sense that it is each Flyway's best attempt to balance the many competing considerations of both consumptive and nonconsumptive users.

(43) Lethal methods should be used where nonlethal methods have failed or where a ''true'' human safety threat exists.

We agree in large part and note that the use of nonlethal methods have failed on a wide geographic front as these populations continue to expand and increase.

NEPA Considerations

In compliance with the requirements of section 102(2)(C) of the National Environmental Policy Act of 1969 (42 U.S.C. 4332(C)), and the Council on Environmental Quality's regulation for implementing NEPA (40 CFR parts 1500–1508), we published the availability of a DEIS on March 7, 2002 (67 FR 10431), followed by a 91-day comment period. We subsequently reopened the comment period for 60 additional days (68 FR 50546, August 21, 2003). On November 18, 2005, both the Service and the Environmental Protection Agency published notices of availability for the FEIS in the **Federal Register** (70 FR 69966 and 70 FR 69985). This FEIS is available to the public (see **ADDRESSES**).

Endangered Species Act Consideration

Section 7(a)(2) of the Endangered Species Act (ESA), as amended (16 U.S.C. 1531 1543; 87 Stat. 884) provides that ''Each Federal agency shall, in consultation with and with the assistance of the Secretary, insure that any action authorized, funded, or carried out * * * is not likely to jeopardize the continued existence of any endangered species or threatened species or result in the destruction or adverse modification of [critical] habitat * * *.'' We completed a biological evaluation and informal consultation (both available upon request; see **ADDRESSES**) under section 7 of the ESA for the action described in this final rule. In the letter of concurrence between the Division of Migratory Bird Management and the Division of Endangered Species, we concluded that the inclusion of specific conservation measures in the final rule satisfies concerns about certain species. Therefore, the action is not likely to adversely affect any threatened, endangered, or candidate species.

Regulatory Flexibility Act

The Regulatory Flexibility Act of 1980 (5 U.S.C. 601 et seq.) requires the preparation of flexibility analyses for actions that will have a significant economic impact on a substantial number of small entities, which includes small businesses, organizations, or governmental

jurisdictions. The economic impacts of this rule will fall primarily on State and local governments and Wildlife Services because of the structure of wildlife damage management. Data are not available to estimate the exact number of governments affected, but it is unlikely to be a substantial number on a national scale. We estimate that implementation of new resident Canada goose management regulations will help alleviate local public health and safety concerns, decrease economic damage caused by excessive numbers of geese, and increase the quality of life for those people experiencing goose conflicts. Implementation of new resident Canada goose regulations will also help reduce agricultural losses caused by these geese. Our rule gives State fish and wildlife agencies significantly more latitude to manage resident Canada goose populations. Goose populations may be reduced to levels that local communities can support, and agricultural damages from resident Canada geese may be reduced. We have determined that a Regulatory Flexibility Act analysis is not required.

Executive Order 12866

In accordance with the criteria in Executive Order 12866, this action is not a significant regulatory action subject to Office of Management and Budget (OMB) review. This rule will not have an annual economic effect of $100 million or adversely affect any economic sector, productivity, competition, jobs, the environment, or other units of government. Therefore, a cost benefit economic analysis is not required. This action will not create inconsistencies with other agencies' actions or otherwise interfere with an action taken or planned by another agency. The Federal agency most interested in this action is Wildlife Services. The action is consistent with the policies and guidelines of other Department of the Interior bureaus. This action will not materially affect entitlements, grants, user fees, loan programs, or the rights and obligations of their recipients. This action will not raise novel legal or policy issues because we have previously managed resident Canada geese under the Migratory Bird Treaty Act.

Small Business Regulatory Enforcement Fairness Act

This rule is not a major rule under 5 U.S.C. 804(2), the Small Business Regulatory Enforcement Fairness Act. It will not have an annual effect on the economy of $100 million or more; nor will it cause a major increase in costs or prices for consumers, individual industries, Federal, State, or local government agencies, or geographic regions. It will not have significant adverse effects on competition, employment, investment, productivity, innovation, or the ability of U.S.-based enterprises to compete with foreign-based enterprises.

Paperwork Reduction Act and Information Collection

These regulations contain information collection and recordkeeping requirements subject to the Paperwork Reduction Act of 1995 (44 U.S.C. 3507(d) and which OMB has approved and assigned control number 1018–0133, which expires on August 31, 2009. Public reporting burden associated with: (1) The Airport Control Order averages 1.5 hours per annual report; (2) the Nest and Egg Depredation Order averages 0.5 hours per registration and 0.5 hours per annual report; (3) the Agriculture Depredation Order averages 0.5 hours for recordkeeping and 8 hours per annual report; (4) the Public Health Control Order averages 1 hour per annual report; and (5) the Population Control component averages 24 hours for the approval request and annual report and 160 hours per population survey. These burden estimates include time for reviewing instructions, searching existing data sources, gathering and maintaining the data needed, and completing and reviewing the collection of information. We may not conduct or sponsor and you are not required to respond to a collection of information unless it displays a currently valid OMB control number.

Unfunded Mandates Reform Act

The Unfunded Mandates Reform Act of 1995 requires agencies to assess the effects of Federal regulatory actions on State, local, and tribal governments and the private sector. The purpose of the act is to strengthen the partnership between the Federal Government and State, local, and tribal governments and to end the imposition, in the absence of full consideration by Congress, of Federal mandates on these governments without adequate Federal funding, in a manner that may displace other essential governmental priorities. We have determined, in compliance with the requirements of the Unfunded Mandates Reform Act, 2 U.S.C. 1502 *et seq.*, that this action will not ''significantly or uniquely'' affect small governments, and will not produce a Federal mandate of $100 million or more in any given year on local or State government or private entities. Therefore, this action is not a ''significant regulatory action'' under the Unfunded Mandates Reform Act.

Civil Justice Reform—Executive Order 12988

In promulgating this rule, we have determined that these regulations meet the applicable standards provided in Sections 3(a) and 3(b)(2) of Executive Order 12988. Specifically, this rule has been reviewed to eliminate errors and ambiguity, has been written to minimize litigation, provides a clear legal standard for affected conduct, and specifies in clear language the effect on existing Federal law or regulation. We do not anticipate that this rule will require any additional involvement of the justice system beyond enforcement of provisions of the Migratory Bird Treaty Act of 1918 that have already been implemented through previous rulemakings.

Takings Implication Assessment

In accordance with Executive Order 12630, this action, authorized by the Migratory Bird Treaty Act, does not have significant takings implications and does not affect any constitutionally protected property rights. This action will not result in the physical occupancy of property, the physical invasion of property, or the regulatory taking of any property. In fact, this action will help alleviate private and public property damage and concerns related to public health and safety and allow the exercise of otherwise unavailable privileges.

Federalism Effects

Due to the migratory nature of certain species of birds, the Federal Government has been given statutory responsibility over these species by the Migratory Bird Treaty Act. While legally this responsibility rests solely with the Federal Government, it is in the best interest of the migratory bird resource for us to work cooperatively with the Flyway Councils and States to develop and implement the various migratory bird management plans and strategies.

For example, in the establishment of migratory game bird hunting regulations, we annually prescribe frameworks from which the States make selections and employ guidelines to establish special regulations on Federal Indian reservations and ceded lands. This process preserves the ability of the States and Tribes to determine which seasons meet their individual needs. Frameworks are developed in a cooperative process with the States and the Flyway Councils and any State or Tribe may be more restrictive than the Federal frameworks. This allows States

to participate in the development of frameworks from which they will make selections, thereby having an influence on their own regulations.

The rulemaking was developed following extensive input from the Flyway Councils, States, and Wildlife Services. Individual Flyway management plans were developed and approved by the four Flyway Councils, and States actively participated in the scoping process for the DEIS. This final rule does not have a substantial direct effect on fiscal capacity, change the roles or responsibilities of Federal or State governments, or intrude on State policy or administration. The rule allows States the latitude to develop and implement their own resident Canada goose management action plan within the frameworks of the selected alternative. Therefore, in accordance with Executive Order 13132, this rule does not have significant federalism effects and does not have sufficient federalism implications to warrant the preparation of a Federalism Assessment.

Government-to-Government Relationship With Tribes

In accordance with the President's memorandum of April 29, 1994, ''Government-to-Government Relations with Native American Tribal Governments'' (59 FR 22951), Executive Order 13175, and 512 DM 2, we have determined that this rule has no effects on Federally-recognized Indian tribes. Specifically, Tribes were sent copies of our August 19, 1999, Notice of Intent (64 FR 45269) that outlined the proposed action in the Draft Environmental Impact Statement on Resident Canada Goose Management. In addition, Tribes were sent our December 30, 1999, Notice of Meetings (64 FR 73570), which provided the public additional opportunity to comment on the DEIS process. No known Native American tribes depend on this resource for sustenance or religious purposes.

Energy Effects—Executive Order 13211

On May 18, 2001, the President issued Executive Order 13211 on regulations that significantly affect energy supply, distribution, and use. Executive Order 13211 requires agencies to prepare Statements of Energy Effects when undertaking certain actions. This rule is not a significant regulatory action under Executive Order 12866 and is not expected to adversely affect energy supplies, distribution, or use. Therefore, this action is not a significant energy action and no Statement of Energy Effects is required.

Record of Decision

The Record of Decision for management of resident Canada geese, prepared pursuant to National Environmental Policy Act (NEPA) regulations at 40 CFR 1505.2, is herein published in its entirety.

This Record of Decision (ROD) has been developed by the U.S. Fish and Wildlife Service (Service) in compliance with the agency decision-making requirements of NEPA. The purpose of this ROD is to document the Service's decision for the selection of an alternative for strategies to reduce, manage, and control resident Canada goose populations in the continental United States and to reduce related damages. Alternatives have been fully described and evaluated in the November 2005 Final Environmental Impact Statement (FEIS) on resident Canada goose management.

This ROD is intended to: (a) State the Service's decision, present the rationale for its selection, and describe its implementation; (b) identify the alternatives considered in reaching the decision; and (c) state whether all means to avoid or minimize environmental harm from implementation of the selected alternative have been adopted (40 CFR 1505.2).

Project Description

In recent years, Canada geese that nest and/or reside predominantly within the conterminous United States have undergone dramatic population growth and are increasingly coming into conflict with people and causing personal and public property damage. In 1999, in response to urging from the public and from State and Federal wildlife agencies, the Service decided to prepare a programmatic EIS, in cooperation with the Wildlife Services program of the U.S. Department of Agriculture Animal and Plant Health Inspection Service (APHIS WS), to evaluate strategies to reduce, manage, and control resident Canada goose populations in the continental United States and to reduce related damages.

Key Issues

Public involvement occurred throughout the EIS and rulemaking process. From 1999 to 2005, we held 20 public meetings over the course of more than 11 months of total public comment. Through public scoping (the first stage of public comment) and agency discussions, key issues were identified. In the EIS environmental analysis, alternatives were analyzed with regard to their potential impacts on resident Canada geese, other wildlife species, natural resources, special status species, socioeconomics, historical resources, and cultural resources. We also considered the alternatives in terms of their ability to fulfill the purpose and objective of the proposed action: to reduce, manage, and control resident Canada goose populations in the continental United States and to reduce related damages, and to provide a regulatory mechanism that would allow State and local agencies, other Federal agencies, and groups and individuals to respond to damage complaints or damages by resident Canada geese.

Alternatives

Since the FEIS is a programmatic document, the alternatives reflect general management strategies to reduce, manage, and control resident Canada goose populations in the continental United States and to reduce related damages. The EIS examined seven alternatives: (A) No Action, (B) Increase Use of Nonlethal Control and Management (no currently permitted activities); (C) Increase Use of Nonlethal Control and Management (continued permitting of those activities generally considered nonlethal); (D) Expanded Hunting Methods and Opportunities; (E) Depredation Order Management (consisting of an Airport Depredation Order, a Nest and Egg Depredation Order, an Agricultural Depredation Order, and a Public Health Depredation Order); (F) Integrated Damage Management and Population Control (Selected Action); and (G) General Depredation Order.

Alternative A

Under the No Action Alternative, the status quo would be maintained. All methods of nonlethal harassment would continue to be allowed. The use of special and regular hunting seasons and the issuance of depredation permits and special Canada goose permits would continue. Those conflicts not eligible for inclusion under the special Canada goose permit would continue to be dealt with on a case-by-case basis, requiring a separate Federal permit for every locality and occurrence within a State.

Alternative B

Under this alternative, the Service and Wildlife Services would actively promote (*i.e.*, either provide staffing and/or funding) the use of nonlethal management tools, such as habitat manipulation and management and goose harassment techniques, and cease the issuance of all Federal permits for the management and control of resident Canada geese. Only those management

techniques not currently requiring a Federal permit would be continued under this alternative. Management activities such as trapping and relocation of geese or egg addling would not be allowed or permitted since all permit issuance would cease under this alternative. Permits under existing regulations allowing the take of either goslings or adults would not be issued, and special hunting seasons primarily directed at resident Canada geese would be discontinued.

Alternative C

Under this alternative, the Service and Wildlife Services would actively promote (*i.e.*, either provide staffing and/or funding) the use of nonlethal management tools, such as habitat manipulation and management and goose harassment techniques. Management activities such as trapping and relocation of geese or egg addling would be allowed with a Federal permit. However, permits under existing regulations, including the Special Canada goose permit, allowing the take of either goslings or adults would not be issued. Special hunting seasons primarily targeted at resident Canada geese would be continued.

Alternative D

This alternative would provide new regulatory options to State wildlife management agencies and Tribal entities potentially to increase the harvest of resident Canada geese. This approach would authorize the use of additional hunting methods such as electronic calls, unplugged shotguns, and expanded shooting hours (one-half hour after sunset) during existing, operational, special September Canada goose seasons (*i.e.*, September 1–15). Utilization of these additional hunting methods during any new special seasons or other existing, operational special seasons (*i.e.*, September 15–30) would be experimental and require demonstration of a minimal impact to migrant Canada goose populations. These experimental seasons would be authorized on a case-by-case basis through the normal migratory bird hunting regulatory process. All expanded hunting methods and opportunities would be conducted outside of any other open waterfowl season (*i.e.*, when all other waterfowl and crane hunting seasons were closed) and restricted to States (or portions of States) in the Atlantic, Central, and Mississippi Flyway. Only State wildlife agencies and Tribal entities in these States could authorize the use of the additional hunting methods for resident Canada geese.

In addition, we would continue the issuance of depredation permits and special Canada goose permits, issued under 50 CFR 21.41 and 21.26, respectively. Annual spring breeding population monitoring would be used to assess population status and provide for the long-term conservation of the resource.

Alternative E

This alternative consists of four separate Control and Depredation Orders. The Orders would allow management activities for resident Canada goose populations generally between March 1 and August 31. In addition to these specific strategies, we would continue the use of special and regular hunting seasons, issued under 50 CFR part 20, and the issuance of depredation permits and special Canada goose permits, issued under 50 CFR 21.41 and 21.26, respectively.

Airport Control Order

This option would establish a control order authorizing airport managers at commercial, public, and private airports and military air operation facilities to establish and implement a resident Canada goose control and management program when necessary to protect public safety and allow resolution or prevention of airport and military airfield safety threats from resident Canada geese. Control and management activities would include indirect and/or direct control strategies such as trapping and relocation, nest and egg destruction, gosling and adult trapping and culling programs, or other control strategies. The intent of this alternative is to significantly reduce resident Canada goose populations at airports, where there is a demonstrated threat to human safety and aircraft.

Airports and military airfields could conduct management and control activities between April 1 and September 15. The destruction of resident Canada goose nests and eggs could take place between March 1 and June 30.

Nest and Egg Depredation Order

This option would establish a depredation order authorizing private landowners and managers of public lands to destroy resident Canada goose nests and take resident Canada goose eggs on property under their jurisdiction when necessary to resolve or prevent injury to people, property, agricultural crops, or other interests. The goal of this program would be to stabilize resident Canada goose breeding populations, not directly reduce populations, and thus prevent an increase in long-term conflicts between geese and people. Landowners could conduct resident Canada goose nest and egg destruction activities between March 1 and June 30.

Agricultural Depredation Order

This option would establish a depredation order at agricultural facilities by authorizing States, via the State wildlife agency, to implement a program to allow landowners, operators, and tenants actively engaged in commercial agriculture to conduct direct damage management actions such as nest and egg destruction, gosling and adult trapping and culling programs, or other wildlife-damage management strategies on resident Canada geese when the geese are committing depredations to agricultural crops and when necessary to resolve or prevent injury to agricultural crops or other agricultural interests from resident Canada geese. The program would be restricted to the States in the Atlantic, Central, and Mississippi Flyways. Authorized agricultural producers could conduct management and control activities between May 1 and August 31. The destruction of resident Canada goose nests and eggs could take place between March 1 and June 30. All management actions would have to occur on the premises of the depredation area.

Public Health Control Order

This option would establish a control order authorizing States, via the State wildlife agency, to conduct resident Canada goose control and management activities including direct control strategies when resident Canada geese are posing a direct threat to human health. A direct threat to human health is one where a Federal, State, or local public health agency recommends removal of resident Canada geese that the agency has determined pose a specific, immediate human health threat by creating conditions conducive to the transmission of human or zoonotic pathogens. The State could not use this control order for situations in which resident Canada geese were merely causing a nuisance. Management and control activities could only be conducted between April 1 and August 31. The destruction of resident Canada goose nests and eggs could take place between March 1 and June 30. Resident Canada geese could be taken only within the specified area of the direct threat to human health.

Alternative F

This alternative would establish a new regulation with three main program components. The first component

would consist of Alternative E—Control and Depredation Order Management and would be targeted to address resident Canada goose depredation, damage, and conflict management.

The second component would consist of Alternative D—Expanded Hunting Methods and Opportunities and would be targeted to increase the sport harvest of resident Canada geese above that which results from existing September special Canada goose seasons.

The third component would consist of a resident Canada goose population control program, or management take. Management take is defined as a special management action needed to reduce certain wildlife populations when traditional management programs are unsuccessful in preventing injuries from overabundance of the population. The management take program would authorize the Director to enable States to use hunters to harvest resident Canada geese, by way of shooting in a hunting manner, during the August 1 through August 31 period using additional methods of taking resident Canada geese, *i.e.*, allow shooting hours to extend to one-half hour after sunset and remove daily bag limits for resident Canada geese. The intent of the program is to reduce resident Canada goose populations in order to protect personal property and agricultural crops, protect other interests from injury, resolve or prevent injury to people, property, agricultural crops, or other interests from resident Canada geese, and contribute to potential concerns about human health when traditional and otherwise authorized management measures are unsuccessful in preventing injuries. Like Alternative D, the management take component would be restricted to the States in the Atlantic, Central, and Mississippi Flyways.

States participating in the management take program component would be required to annually monitor the spring breeding population in their State in order to assess population status. We would annually assess the overall impact and effectiveness of the management take program on resident Canada goose populations to ensure compatibility with long-term conservation of the resource.

In addition to the three main new components, we would continue the use of special and regular hunting seasons, issued under 50 CFR part 20, and the issuance of depredation permits and special Canada goose permits, issued under 50 CFR 21.41 and 21.26, respectively.

Alternative G

This alternative would establish a general depredation order, allowing any authorized person to conduct damage management activities on resident Canada goose populations either posing a threat to health and human safety or causing damage to personal or public property. The intent of this alternative would be to significantly reduce resident Canada goose populations in areas where conflicts are occurring. The general depredation order could only be implemented between April 1 and August 31, except for the take of nests and eggs which would be additionally allowed in March. This alternative would also include all components of Alternative D—Expanded Hunting Methods and Opportunities. In addition, we would continue the use of special and regular hunting seasons, issued under 50 CFR part 20, and the issuance of depredation permits and special Canada goose permits, issued under 50 CFR 21.41 and 21.26, respectively.

Under this alternative, unlike Alternative Integrated Damage Management and Population Control, the authorization for management activities, would come directly from the Service via this depredation order and the authorized person or entity could implement the provisions of this alternative within the guidelines established by the Service. Persons authorized by the Service under the Depredation Order would not need to obtain authority from the State unless required to do so under State law.

Decision

The Service's decision is to implement the preferred alternative, Alternative F, as it is presented in the final rule. This decision is based on a thorough review of the alternatives and their environmental consequences.

Other Agency Decisions

A Record of Decision will be produced by APHIS/WS. The responsible officials at APHIS/WS will adopt the FEIS.

Rationale for Decision

As stated in the CEQ regulations, ''the agency's preferred alternative is the alternative which the agency believes would fulfill its statutory mission and responsibilities, giving consideration to economic, environmental, technical and other factors.'' The preferred alternative has been selected for implementation based on consideration of a number of environmental, regulatory, and social factors. Based on our analysis, the preferred alternative would be more effective than the current program; is environmentally sound, cost effective, and flexible enough to meet different management needs around the country; and does not threaten the long-term sustainability of resident Canada goose populations or populations of any other natural resource.

Alternative F (Integrated Damage Management and Population Control) was selected because increased lethal and nonlethal activities would be expected to significantly decrease the number of injurious resident Canada geese in specific localized areas, especially airports and military airfields, agricultural areas, urban/suburban areas subjected to nest and egg removal, and public health threat areas. Further, expanded hunting opportunities inside the existing hunting frameworks and additional management take outside the sport hunting frameworks would help decrease populations and injuries on a more regional and statewide scale, compared to site-specific management activities. Regionally and nationally, we expect resident Canada goose populations would gradually return to levels that we, the Flyway Councils, and the States believe are more compatible with human activities, especially in those high-conflict areas related to public health and safety, agricultural depredation, and urban and suburban areas. The long-term viability of goose populations and other Federally-protected species would not be affected.

We did not select the No Action Alternative (Alternative A) because in recent years it has become clear from public and professional feedback that the status quo is not adequately resolving resident Canada goose conflicts for many stakeholders or reducing the population. Furthermore, our environmental analysis indicated that growth rates were more likely to be reduced and conflicts were more likely to be resolved under other options than under the No Action Alternative. Alternatives that were either strictly, or largely, nonlethal control and management (Alternatives B and C) were not selected because our analysis indicated that population growth and resultant injury would continue and be more pronounced than under the No Action alternative. We did not select the General Depredation Order Alternative (G) because, while environmentally the impacts were similar to those under our selected alternative, practically and administratively the impacts were much different. Under the General Depredation Order Alternative, the State's role would be significantly diminished in decisions regarding resident Canada goose management,

unless they decided on their own to become involved, and we believe this would not be in the best interest of either the resource or the affected entities.

We did select the Expanded Hunting Methods and Opportunities Alternative (D) and the Control and Depredation Order Management Alternative (E), but we combined the components of both alternatives with other components into our selected Alternative F.

List of Subjects in 50 CFR Parts 20 and 21

Exports, Hunting, Imports, Reporting and recordkeeping requirements, Transportation, Wildlife.

■ For the reasons stated in the preamble, we hereby amend parts 20 and 21, of subchapter B, chapter I, title 50 of the Code of Federal Regulations, as set forth below:

PART 20—[AMENDED]

■ 1. The authority citation for part 20 is revised to read as follows:

Authority: Migratory Bird Treaty Act, 40 Stat. 755, 16 U.S.C. 703–712; Fish and Wildlife Act of 1956, 16 U.S.C. 742a–j; Public Law 106–108, 113 Stat. 1491, Note Following 16 U.S.C. 703.

■ 2. Amend § 20.11 by adding paragraph (n) to read as follows:

§ 20.11 What terms do I need to understand?

* * * * *

(n) *Resident Canada geese* means Canada geese that nest within the lower 48 States in the months of March, April, May, or June, or reside within the lower 48 States and the District of Columbia in the months of April, May, June, July, or August.

■ 3. Revise paragraphs (b) and (g) of § 20.21 to read as follows:

§ 20.21 What hunting methods are illegal?

* * * * *

(b) With a shotgun of any description capable of holding more than three shells, unless it is plugged with a one-piece filler, incapable of removal without disassembling the gun, so its total capacity does not exceed three shells. However, this restriction does not apply during:

(1) A light-goose-only season (greater and lesser snow geese and Ross' geese) when all other waterfowl and crane hunting seasons, excluding falconry, are closed while hunting light geese in Central and Mississippi Flyway portions of Alabama, Arkansas, Colorado, Illinois, Indiana, Iowa, Kansas, Kentucky, Louisiana, Michigan, Minnesota, Mississippi, Missouri, Montana, Nebraska, New Mexico, North Dakota, Ohio, Oklahoma, South Dakota, Tennessee, Texas, Wisconsin, and Wyoming.

(2) A season only for Canada geese during the period of September 1 to September 15 when all other waterfowl and crane hunting seasons, excluding falconry, are closed in the Atlantic, Central, and Mississippi Flyway portions of Alabama, Arkansas, Colorado, Connecticut, Delaware, Florida, Georgia, Illinois, Indiana, Iowa, Kansas, Kentucky, Louisiana, Maine, Maryland, Massachusetts, Michigan, Minnesota, Mississippi, Missouri, Montana, Nebraska, New Hampshire, New Mexico, New Jersey, New York, North Carolina, North Dakota, Ohio, Oklahoma, Pennsylvania, Rhode Island, South Carolina, South Dakota, Tennessee, Texas, Vermont, Virginia, West Virginia, Wisconsin, and Wyoming.

* * * * *

(g) By the use or aid of recorded or electrically amplified bird calls or sounds, or recorded or electrically amplified imitations of bird calls or sounds. However, this restriction does not apply during:

(1) A light-goose-only season (greater and lesser snow geese and Ross' geese) when all other waterfowl and crane hunting seasons, excluding falconry, are closed while hunting light geese in Central and Mississippi Flyway portions of Alabama, Arkansas, Colorado, Illinois, Indiana, Iowa, Kansas, Kentucky, Louisiana, Michigan, Minnesota, Mississippi, Missouri, Montana, Nebraska, New Mexico, North Dakota, Ohio, Oklahoma, South Dakota, Tennessee, Texas, Wisconsin, and Wyoming.

(2) A season only for Canada geese during the period of September 1 to September 15 when all other waterfowl and crane hunting seasons, excluding falconry, are closed in the Atlantic, Central, and Mississippi Flyway portions of Alabama, Arkansas, Colorado, Connecticut, Delaware, Florida, Georgia, Illinois, Indiana, Iowa, Kansas, Kentucky, Louisiana, Maine, Maryland, Massachusetts, Michigan, Minnesota, Mississippi, Missouri, Montana, Nebraska, New Hampshire, New Mexico, New Jersey, New York, North Carolina, North Dakota, Ohio, Oklahoma, Pennsylvania, Rhode Island, South Carolina, South Dakota, Tennessee, Texas, Vermont, Virginia, West Virginia, Wisconsin, and Wyoming.

* * * * *

PART 21—[AMENDED]

■ 4. The authority citation for part 21 is revised to read as follows:

Authority: Migratory Bird Treaty Act, 40 Stat. 755 (16 U.S.C. 703); Public Law 95–616, 92 Stat. 3112 (16 U.S.C. 712(2)); Public Law 106–108, 113 Stat. 1491, Note Following 16 U.S.C. 703.

■ 5. Amend § 21.3 by revising the definition for ''Resident Canada geese'' to read as follows:

§ 21.3 Definitions.

* * * * *

Resident Canada geese means Canada geese that nest within the lower 48 States in the months of March, April, May, or June, or reside within the lower 48 States and the District of Columbia in the months of April, May, June, July, or August.

* * * * *

■ 6. Amend subpart D by revising the title to read as follows:

Subpart D—Control of Depredating and Otherwise Injurious Birds

* * * * *

■ 7. Add § 21.49 to subpart D to read as follows:

§ 21.49 Control order for resident Canada geese at airports and military airfields.

(a) *Which Canada geese are covered by this order?* This regulation addresses the control and management of resident Canada geese, as defined in § 21.3.

(b) *What is the control order for resident Canada geese at airports, and what is its purpose?* The airport control order authorizes managers at commercial, public, and private airports (airports) (and their employees or their agents) and military air operation facilities (military airfields) (and their employees or their agents) to establish and implement a control and management program when necessary to resolve or prevent threats to public safety from resident Canada geese. Control and management activities include indirect and/or direct control strategies such as trapping and relocation, nest and egg destruction, gosling and adult trapping and culling programs, or other lethal and non-lethal control strategies.

(c) *Who may participate in the program?* To be designated as an airport that is authorized to participate in this program, an airport must be part of the National Plan of Integrated Airport Systems and have received Federal grant-in-aid assistance, or a military airfield, meaning an airfield or air station that is under the jurisdiction, custody, or control of the Secretary of a

military department. Only airports and military airfields in the lower 48 States and the District of Columbia are eligible to conduct and implement the various resident Canada goose control and management program components.

(d) *What are the restrictions of the control order for resident Canada geese at airports and military airfields?* The airport control order for resident Canada geese is subject to the following restrictions:

(1) Airports and military airfields should use nonlethal goose management tools to the extent they deem appropriate. To minimize lethal take, airports and military airfields should follow this procedure:

(i) Assess the problem to determine its extent or magnitude, its impact on current operations, and the appropriate control method to be used.

(ii) Base control methods on sound biological, environmental, social, and cultural factors.

(iii) Formulate appropriate methods into a control strategy that uses several control techniques rather than relying on a single method.

(iv) Implement all appropriate nonlethal management techniques (such as harassment and habitat modification) in conjunction with take authorized under this order.

(2)(i) Methods of take for the control of resident Canada geese are at the airport's and military airfield's discretion from among the following:

(A) Egg oiling,

(B) Egg and nest destruction,

(C) Shooting,

(D) Lethal and live traps,

(E) Nets,

(F) Registered animal drugs, pesticides, and repellants,

(G) Cervical dislocation, and

(H) CO_2 asphyxiation.

(ii) Birds caught live may be euthanized or transported and relocated to another site approved by the State or Tribal wildlife agency, if required.

(iii) All techniques used must be in accordance with other Federal, State, and local laws, and their use must comply with any labeling restrictions.

(iv) Persons using shotguns must use nontoxic shot, as listed in § 20.21(j) of this subchapter.

(v) Persons using egg oiling must use 100 percent corn oil, a substance exempted from regulation by the U.S. Environmental Protection Agency under the Federal Insecticide, Fungicide, and Rodenticide Act.

(3) Airports and military airfields may conduct management and control activities, involving the take of resident Canada geese, under this section between April 1 and September 15. The destruction of resident Canada goose nests and eggs may take place between March 1 and June 30.

(4) Airports and military airfields and their employees and agents may possess, transport, and otherwise dispose of resident Canada geese taken under this section. Disposal of birds taken under this order may be by donation to public museums or public institutions for scientific or educational purposes, processing for human consumption and subsequent distribution free of charge to charitable organizations, or burial or incineration. Airports/military airfields, their employees, and designated agents may not sell, offer for sale, barter, or ship for the purpose of sale or barter any resident Canada geese taken under this section, nor their plumage or eggs. Any specimens needed for scientific purposes as determined by the Regional Director must not be destroyed, and information on birds carrying metal leg bands must be submitted to the Bird Banding Laboratory by means of a toll-free telephone number at 1–800–327–BAND (or 2263).

(5) Resident Canada geese may be taken only within a 3-mile radius of the airport or military airfield. Airports and military airfields or their agents must first obtain all necessary authorizations from landowners for all management activities conducted outside the airport or military airfield's boundaries and be in compliance with all State and local laws and regulations.

(6) Nothing in this section authorizes the killing of resident Canada geese or destruction of their nests and eggs contrary to the laws or regulations of any State or Tribe, and none of the privileges of this section may be exercised unless the airport or military airfield possesses the appropriate State or Tribal authorization or other permits required by the State or Tribe. Moreover, this section does not authorize the killing of any migratory bird species or destruction of their nest or eggs other than resident Canada geese.

(7) Authorized airports and military airfields, and their employees and agents operating under the provisions of this section may not use decoys, calls, or other devices to lure birds within gun range.

(8) Airports and military airfields exercising the privileges granted by this section must submit an annual report summarizing activities, including the date and numbers and location of birds, nests, and eggs taken, by December 31 of each year to the Regional Migratory Bird Permit Office listed in § 2.2 of this subchapter.

(9) Nothing in this section applies to any Federal land without written permission of the Federal agency with jurisdiction.

(10) Airports and military airfields may not undertake any actions under this section if the activities adversely affect other migratory birds or species designated as endangered or threatened under the authority of the Endangered Species Act. Persons operating under this order must immediately report the take of any species protected under the Endangered Species Act to the Service. Further, to protect certain species from being adversely affected by management actions, airports and military airfields must:

(i) Follow the Federal-State Contingency Plan for the whooping crane;

(ii) Conduct no activities within 300 meters of a whooping crane or Mississippi sandhill crane nest;

(iii) Follow all Regional (or National when available) Bald Eagle Nesting Management guidelines for all management activities;

(iv) Contact the Arizona Ecological Services Office (for the Colorado River and Arizona sites) or the Carlsbad Fish and Wildlife Office (for Salton Sea sites) if control activities are proposed in or around occupied habitats (cattail or cattail bulrush marshes) to discuss the proposed activity and ensure that implementation will not adversely affect clapper rails or their habitats; and

(v) In California, any control activities of resident Canada geese in areas used by the following species listed under the Endangered Species Act must be done in coordination with the appropriate local FWS field office and in accordance with standard local operating procedures for avoiding adverse effects to the species or its critical habitat:

(A) *Birds:* Light-footed clapper rail, California clapper rail, Yuma clapper rail, California least tern, southwestern willow flycatcher, least Bell's vireo, western snowy plover, California gnatcatcher.

(B) *Amphibians:* California red-legged frog and California tiger salamander.

(C) *Insects:* Valley elderberry longhorn beetle and delta green ground beetle.

(D) *Crustaceans:* Vernal pool fairy shrimp, conservancy fairy shrimp, longhorn fairy shrimp, vernal pool tadpole shrimp, San Diego fairy shrimp, and Riverside fairy shrimp.

(E) *Plants:* Butte County meadowfoam, large-flowered wooly meadowfoam, Cook's lomatium, Contra Costa goldfields, Hoover's spurge, fleshy owl's clover, Colusa grass, hairy Orcutt grass, Solano grass, Greene's tuctoria,

Sacramento Valley Orcutt grass, San Joaquin Valley Orcutt grass, slender Orcutt grass, California Orcutt grass, spreading navarretia, and San Jacinto Valley crownscale.

(e) *Can the control order be suspended?* We reserve the right to suspend or revoke an airport's or military airfield's authority under this control order if we find that the terms and conditions specified in the control order have not been adhered to by that airport or military airfield. Final decisions to revoke authority will be made by the appropriate Regional Director. The criteria and procedures for suspension, revocation, reconsideration, and appeal are outlined in §§ 13.27 through 13.29 of this subchapter. For the purposes of this section, ''issuing officer'' means the Regional Director and ''permit'' means the authority to act under this control order. For purposes of § 13.29(e), appeals must be made to the Director.

(f) *Has the Office of Management and Budget (OMB) approved the information collection requirements of the control order?* OMB has approved the information collection and recordkeeping requirements of the control order under OMB control number 1018–0133. We may not conduct or sponsor, and you are not required to respond to, a collection of information unless it displays a currently valid OMB control number. You may send comments on the information collection and recordkeeping requirements to the Service's Information Collection Clearance Officer, U.S. Fish and Wildlife Service, MS 222—ARLSQ, 1849 C Street NW., Washington, DC 20240.

■ 8. Add § 21.50 to subpart D to read as follows:

§ 21.50 Depredation order for resident Canada geese nests and eggs.

(a) *Which Canada geese are covered by this order?* This regulation addresses the control and management of resident Canada geese, as defined in § 21.3.

(b) *What is the depredation order for resident Canada geese nests and eggs, and what is its purpose?* The nest and egg depredation order for resident Canada geese authorizes private landowners and managers of public lands (landowners) (and their employees or their agents) to destroy resident Canada goose nests and eggs on property under their jurisdiction when necessary to resolve or prevent injury to people, property, agricultural crops, or other interests.

(c) *Who may participate in the depredation order?* Only landowners (and their employees or their agents) in the lower 48 States and the District of Columbia are eligible to implement the resident Canada goose nest and egg depredation order.

(d) *What are the restrictions of the depredation order for resident Canada goose nests and eggs?* The resident Canada goose nest and egg depredation order is subject to the following restrictions:

(1) Before any management actions can be taken, landowners must register with the Service at *http://www.fws.gov/permits/mbpermits/gooseeggregistration.html*. Landowners must also register each employee or agent working on their behalf. Once registered, landowners or their agents will be authorized to act under the depredation order.

(2) Landowners authorized to operate under the depredation order must use nonlethal goose management techniques to the extent they deem appropriate in an effort to minimize take.

(3) Methods of nest destruction or take are at the landowner's discretion from among the following:

(i) Egg oiling, using 100 percent corn oil, a substance exempted from regulation by the U.S. Environmental Protection Agency under the Federal Insecticide, Fungicide, and Rodenticide Act, and

(ii) Removal and disposal of eggs and nest material.

(4) Landowners authorized to operate under the depredation order may conduct resident Canada goose nest and egg destruction activities between March 1 and June 30.

(5) Landowners authorized to operate under the depredation order may possess, transport, and dispose of resident Canada goose nests and eggs taken under this section. Landowners authorized to operate under the program may not sell, offer for sale, barter, or ship for the purpose of sale or barter any resident Canada goose nest or egg taken under this section.

(6) Landowners exercising the privileges granted by this section must complete an annual report summarizing activities, including the date, numbers, and location of nests and eggs taken by October 31 of each year at *http://www.fws.gov/permits/mbpermits/gooseeggregistration/report.html* before any subsequent registration for the following year.

(7) Nothing in this section authorizes the destruction of resident Canada goose nests or the take of resident Canada goose eggs contrary to the laws or regulations of any State or Tribe, and none of the privileges of this section may be exercised unless the landowner is authorized to operate under the program and possesses the appropriate State or Tribal permits, when required. Moreover, this section does not authorize the killing of any migratory bird species or destruction of their nest or eggs other than resident Canada geese.

(8) Landowners may not undertake any actions under this section if the activities adversely affect other migratory birds or species designated as endangered or threatened under the authority of the Endangered Species Act. Persons operating under this order must immediately report the take of any species protected under the Endangered Species Act to the Service. Further, to protect certain species from being adversely affected by management actions, landowners must:

(i) Follow the Federal-State Contingency Plan for the whooping crane;

(ii) Conduct no activities within 300 meters of a whooping crane or Mississippi sandhill crane nest;

(iii) Follow all Regional (or National when available) Bald Eagle Nesting Management guidelines for all management activities;

(iv) Contact the Arizona Ecological Services Office (for the Colorado River and Arizona sites) or the Carlsbad Fish and Wildlife Office (for Salton Sea sites) if control activities are proposed in or around occupied habitats (cattail or cattail bulrush marshes) to discuss the proposed activity and ensure that implementation will not adversely affect clapper rails or their habitats; and

(v) In California, any control activities of resident Canada geese in areas used by the following species listed under the Endangered Species Act must be done in coordination with the appropriate local FWS field office and in accordance with standard local operating procedures for avoiding adverse effects to the species or its critical habitat:

(A) *Birds:* Light-footed clapper rail, California clapper rail, Yuma clapper rail, California least tern, southwestern willow flycatcher, least Bell's vireo, western snowy plover, California gnatcatcher.

(B) *Amphibians:* California red-legged frog and California tiger salamander.

(C) *Insects:* Valley elderberry longhorn beetle and delta green ground beetle.

(D) *Crustaceans:* Vernal pool fairy shrimp, conservancy fairy shrimp, longhorn fairy shrimp, vernal pool tadpole shrimp, San Diego fairy shrimp, and Riverside fairy shrimp.

(E) *Plants:* Butte County meadowfoam, large-flowered wooly meadowfoam, Cook's lomatium, Contra

Costa goldfields, Hoover's spurge, fleshy owl's clover, Colusa grass, hairy Orcutt grass, Solano grass, Greene's tuctoria, Sacramento Valley Orcutt grass, San Joaquin Valley Orcutt grass, slender Orcutt grass, California Orcutt grass, spreading navarretia, and San Jacinto Valley crownscale.

(e) *Can the depredation order be suspended?* We reserve the right to suspend or revoke this authorization for a particular landowner if we find that the landowner has not adhered to the terms and conditions specified in the depredation order. Final decisions to revoke authority will be made by the appropriate Regional Director. The criteria and procedures for suspension, revocation, reconsideration, and appeal are outlined in §§ 13.27 through 13.29 of this subchapter. For the purposes of this section, ''issuing officer'' means the Regional Director and ''permit'' means the authority to act under this depredation order. For purposes of § 13.29(e), appeals must be made to the Director. Additionally, at such time that we determine that resident Canada goose populations no longer need to be reduced in order to resolve or prevent injury to people, property, agricultural crops, or other interests, we may choose to terminate part or all of the depredation order by subsequent regulation. In all cases, we will annually review the necessity and effectiveness of the depredation order.

(f) *Has the Office of Management and Budget (OMB) approved the information collection requirements of the depredation order?* OMB has approved the information collection and recordkeeping requirements of the depredation order under OMB control number 1018–0133. We may not conduct or sponsor, and you are not required to respond to, a collection of information unless it displays a currently valid OMB control number. You may send comments on the information collection and recordkeeping requirements to the Service's Information Collection Clearance Officer, U.S. Fish and Wildlife Service, MS 222—ARLSQ, 1849 C Street NW., Washington, DC 20240.

■ 9. Add § 21.51 to subpart D to read as follows:

§ 21.51 Depredation order for resident Canada geese at agricultural facilities.

(a) *Which Canada geese are covered by this order?* This regulation addresses the control and management of resident Canada geese, as defined in § 21.3.

(b) *What is the depredation order for resident Canada geese at agricultural facilities, and what is its purpose?* The depredation order for resident Canada geese at agricultural facilities authorizes States and Tribes, via the State or Tribal wildlife agency, to implement a program to allow landowners, operators, and tenants actively engaged in commercial agriculture (agricultural producers) (or their employees or agents) to conduct direct damage management actions such as nest and egg destruction, gosling and adult trapping and culling programs, or other lethal and non-lethal wildlife-damage management strategies on resident Canada geese when the geese are committing depredations to agricultural crops and when necessary to resolve or prevent injury to agricultural crops or other agricultural interests from resident Canada geese.

(c) *Who may participate in the depredation order?* State and Tribal wildlife agencies in the following States may authorize agricultural producers (or their employees or agents) to conduct and implement various components of the depredation order at agricultural facilities in the Atlantic, Central, and Mississippi Flyway portions of these States: Alabama, Arkansas, Colorado, Connecticut, Delaware, Florida, Georgia, Illinois, Indiana, Iowa, Kansas, Kentucky, Louisiana, Maine, Maryland, Massachusetts, Michigan, Minnesota, Mississippi, Missouri, Montana, Nebraska, New Hampshire, New Mexico, New Jersey, New York, North Carolina, North Dakota, Ohio, Oklahoma, Pennsylvania, Rhode Island, South Carolina, South Dakota, Tennessee, Texas, Vermont, Virginia, West Virginia, Wisconsin, and Wyoming.

(d) *What are the restrictions of the depredation order for resident Canada geese at agricultural facilities?* The depredation order for resident Canada geese at agricultural facilities is subject to the following restrictions:

(1) Only landowners, operators, and tenants (or their employees or agents) actively engaged in commercial activities (agricultural producers) so designated by the States may act under this order.

(2) Authorized agricultural producers should use nonlethal goose management tools to the extent they deem appropriate. To minimize lethal take, agricultural producers should adhere to the following procedure:

(i) Assess the problem to determine its extent or magnitude, its impact to current operations, and the appropriate control method to be used.

(ii) Base control methods on sound biological, environmental, social, and cultural factors.

(iii) Formulate appropriate methods into a control strategy that uses the approach/concept that encourages the use of several control techniques rather than relying on a single method.

(iv) Implement all appropriate nonlethal management techniques (such as harassment and habitat modification) in conjunction with take authorized under this order.

(3)(i) Methods of take for the control of resident Canada geese are at the State's or Tribe's discretion among the following:

(A) Egg oiling,

(B) Egg and nest destruction,

(C) Shotguns,

(D) Lethal and live traps,

(E) Nets,

(F) Registered animal drugs, pesticides, and repellants,

(G) Cervical dislocation, and

(H) CO_2 asphyxiation.

(ii) Birds caught live may be euthanized or transported and relocated to another site approved by the State or Tribal wildlife agency, if required.

(iii) All techniques used must be in accordance with other Federal, State, Tribal, and local laws, and their use must comply with any labeling restrictions.

(iv) Persons using shotguns must use nontoxic shot, as listed in § 20.21(j) of this subchapter.

(v) Persons using egg oiling must use 100 percent corn oil, a substance exempted from regulation by the U.S. Environmental Protection Agency under the Federal Insecticide, Fungicide, and Rodenticide Act.

(4) Authorized agricultural producers and their employees and agents may conduct management and control activities, involving the take of resident Canada geese, under this section between May 1 and August 31. The destruction of resident Canada goose nests and eggs may take place between March 1 and June 30.

(5) Authorized agricultural producers and their employees and agents may possess, transport, and otherwise dispose of resident Canada geese taken under this section. Disposal of birds taken under this order may be by donation to public museums or public institutions for scientific or educational purposes, processing for human consumption and subsequent distribution free of charge to charitable organizations, or burial or incineration. Agricultural producers, their employees, and designated agents may not sell, offer for sale, barter, or ship for the purpose of sale or barter any resident Canada geese taken under this section, nor their plumage or eggs. Any specimens needed for scientific purposes as determined by

the Director must not be destroyed, and information on birds carrying metal leg bands must be submitted to the Bird Banding Laboratory by means of a toll-free telephone number at 1–800–327–BAND (or 2263).

(6) Resident Canada geese may be taken only on land which an authorized agricultural producer personally controls and where geese are committing depredations to agricultural crops.

(7) Authorized agricultural producers, and their employees and agents, operating under the provisions of this section may not use decoys, calls, or other devices to lure birds within gun range.

(8) Any authorized agricultural producer exercising the privileges of this section must keep and maintain a log that indicates the date and number of birds killed and the date and number of nests and eggs taken under this authorization. The log must be maintained for a period of 3 years (and records for 3 previous years of takings must be maintained at all times thereafter). The log and any related records must be made available to Federal, State, or Tribal wildlife enforcement officers upon request during normal business hours.

(9) Nothing in this section authorizes the killing of resident Canada geese or the destruction of their nests and eggs contrary to the laws or regulations of any State or Tribe, and none of the privileges of this section may be exercised unless the agricultural producer possesses the appropriate State or Tribal permits, when required. Moreover, this regulation does not authorize the killing of any migratory bird species or destruction of their nests or eggs other than resident Canada geese.

(10) States and Tribes exercising the privileges granted by this section must submit an annual report summarizing activities, including the numbers and County of birds, nests, and eggs taken, by December 31 of each year to the Regional Migratory Bird Permit Office listed in § 2.2 of this subchapter.

(11) Nothing in this section applies to any Federal land without written permission of the Federal agency with jurisdiction.

(12) Authorized agricultural producers may not undertake any actions under this section if the activities adversely affect other migratory birds or species designated as endangered or threatened under the authority of the Endangered Species Act. Persons operating under this order must immediately report the take of any species protected under the Endangered Species Act to the Service. Further, to protect certain species from being adversely affected by management actions, agricultural producers must:

(i) Follow the Federal-State Contingency Plan for the whooping crane;

(ii) Conduct no activities within 300 meters of a whooping crane or Mississippi sandhill crane nest; and

(iii) Follow all Regional (or National when available) Bald Eagle Nesting Management guidelines for all management activities.

(e) *Can the depredation order be suspended?* We reserve the right to suspend or revoke a State, Tribal, or agricultural producer's authority under this program if we find that the terms and conditions specified in the depredation order have not been adhered to by that State or Tribe. Final decisions to revoke authority will be made by the appropriate Regional Director. The criteria and procedures for suspension, revocation, reconsideration, and appeal are outlined in §§ 13.27 through 13.29 of this subchapter. For the purposes of this section, ''issuing officer'' means the Regional Director and ''permit'' means the authority to act under this depredation order. For purposes of § 13.29(e), appeals must be made to the Director. Additionally, at such time that we determine that resident Canada geese populations no longer pose a threat to agricultural crops or no longer need to be reduced in order to resolve or prevent injury to agricultural crops or other agricultural interests, we may choose to terminate part or all of the depredation order by subsequent regulation. In all cases, we will annually review the necessity and effectiveness of the depredation order.

(f) *Has the Office of Management and Budget (OMB) approved the information collection requirements of the depredation order?* OMB has approved the information collection and recordkeeping requirements of the depredation order under OMB control number 1018–0133. We may not conduct or sponsor, and you are not required to respond to, a collection of information unless it displays a currently valid OMB control number. You may send comments on the information collection and recordkeeping requirements to the Service's Information Collection Clearance Officer, U.S. Fish and Wildlife Service, MS 222–ARLSQ, 1849 C Street, NW., Washington, DC 20240.

■ 10. Add § 21.52 to subpart D to read as follows:

§ 21.52 Public health control order for resident Canada geese.

(a) *Which Canada geese are covered by this order?* This regulation addresses the control and management of resident Canada geese, as defined in § 21.3.

(b) *What is the public health control order for resident Canada geese, and what is its purpose?* The public health control order for resident Canada geese authorizes States, Tribes, and the District of Columbia, via the State or Tribal wildlife agency, to conduct resident Canada goose control and management activities including direct control strategies such as trapping and relocation, nest and egg destruction, gosling and adult trapping and culling programs, or other lethal and non-lethal wildlife damage-management strategies when resident Canada geese are posing a direct threat to human health.

(c) *What is a direct threat to human health?* A direct threat to human health is one where a Federal, State, Tribal, or local public health agency has determined that resident Canada geese pose a specific, immediate human health threat by creating conditions conducive to the transmission of human or zoonotic pathogens. The State or Tribe may not use this control order for situations in which resident Canada geese are merely causing a nuisance.

(d) *Who may participate in the program?* Only State and Tribal wildlife agencies in the lower 48 States and the District of Columbia (or their employees or agents) may conduct and implement the various components of the public health control order for resident Canada geese.

(e) *What are the restrictions of the public health depredation order for resident Canada geese?* The public health control order for resident Canada geese is subject to the following restrictions:

(1) Authorized State and Tribal wildlife agencies should use nonlethal goose management tools to the extent they deem appropriate.

(2)(i) Methods of take for the control of resident Canada geese are at the State's and Tribe's discretion from among the following:

(A) Egg oiling,

(B) Egg and nest destruction,

(C) Shotguns,

(D) Lethal and live traps,

(E) Nets,

(F) Registered animal drugs, pesticides, and repellants,

(G) Cervical dislocation, and

(H) CO_2 asphyxiation.

(ii) Birds caught live may be euthanized or transported and relocated to another site approved by the State or Tribal wildlife agency, if required.

(iii) All techniques used must be in accordance with other Federal, State, Tribal, and local laws, and their use must comply with any labeling restrictions.

(iv) Persons using shotguns must use nontoxic shot, as listed in § 20.21(j) of this subchapter.

(v) Persons using egg oiling must use 100 percent corn oil, a substance exempted from regulation by the U.S. Environmental Protection Agency under the Federal Insecticide, Fungicide, and Rodenticide Act.

(3) Authorized State and Tribal wildlife agencies and their employees and agents may conduct management and control activities, involving the take of resident Canada geese, under this section between April 1 and August 31. The destruction of resident Canada goose nests and eggs may take place between March 1 and June 30.

(4) Authorized State and Tribal wildlife agencies and their employees and agents may possess, transport, and otherwise dispose of resident Canada geese taken under this section. Disposal of birds taken under this order may be by donation to public museums or public institutions for scientific or educational purposes, processing for human consumption and subsequent distribution free of charge to charitable organizations, or burial or incineration. States, their employees, and designated agents may not sell, offer for sale, barter, or ship for the purpose of sale or barter any resident Canada geese taken under this section, nor their plumage or eggs. Any specimens needed for scientific purposes as determined by the Regional Director must not be destroyed, and information on birds carrying metal leg bands must be submitted to the Bird Banding Laboratory by means of a toll-free telephone number at 1–800–327–BAND (or 2263).

(5) Resident Canada geese may be taken only within the specified area of the direct threat to human health.

(6) Authorized State and Tribal wildlife agencies, and their employees and agents operating under the provisions of this section may not use decoys, calls, or other devices to lure birds within gun range.

(7) No person conducting activities under this section should construe the program as authorizing the killing of resident Canada geese or destruction of their nests and eggs contrary to any State law or regulation, nor may any control activities be conducted on any Federal land without specific authorization by the responsible management agency. No person may exercise the privileges granted under this section unless they possess any permits required for such activities by any State or Federal land manager.

(8) Any State or Tribal employee or designated agent authorized to carry out activities under this section must have a copy of the State's or Tribal authorization and designation in their possession when carrying out any activities. If the State or Tribe is conducting operations on private property, the State or Tribe must also require the property owner or occupant on whose premises resident Canada goose activities are being conducted to allow, at all reasonable times, including during actual operations, free and unrestricted access to any Service special agent or refuge officer, State or Tribal wildlife or deputy wildlife agent, warden, protector, or other wildlife law enforcement officer on the premises where they are, or were, conducting activities. Furthermore, any State or Tribal employee or designated agent conducting such activities must promptly furnish whatever information is required concerning such activities to any such wildlife officer.

(9) States and Tribes exercising the privileges granted by this section must submit an annual report summarizing activities, including the numbers and County of birds taken, by December 31 of each year to the Regional Migratory Bird Permit Office listed in § 2.2 of this subchapter.

(10) Authorized State and Tribal wildlife agencies may not undertake any actions under this section if the activities adversely affect other migratory birds or species designated as endangered or threatened under the authority of the Endangered Species Act. Persons operating under this order must immediately report the take of any species protected under the Endangered Species Act to the Service. Further, to protect certain species from being adversely affected by management actions, State and Tribal wildlife agencies must:

(i) Follow the Federal-State Contingency Plan for the whooping crane;

(ii) Conduct no activities within 300 meters of a whooping crane or Mississippi sandhill crane nest;

(iii) Follow all Regional (or National when available) Bald Eagle Nesting Management guidelines for all management activities;

(iv) Contact the Arizona Fish and Wildlife Service Ecological Services Office (for the Colorado River and Arizona sites) or the Carlsbad Fish and Wildlife Office (for Salton Sea sites) if control activities are proposed in or around occupied habitats (cattail or cattail bulrush marshes) to discuss the proposed activity and ensure that implementation will not adversely affect clapper rails or their habitats; and

(v) In California, any control activities of resident Canada geese in areas used by the following species listed under the Endangered Species Act must be done in coordination with the appropriate local FWS field office and in accordance with standard local operating procedures for avoiding adverse effects to the species or its critical habitat:

(A) *Birds:* Light-footed clapper rail, California clapper rail, Yuma clapper rail, California least tern, southwestern willow flycatcher, least Bell's vireo, western snowy plover, California gnatcatcher.

(B) *Amphibians:* California red-legged frog and California tiger salamander.

(C) *Insects:* Valley elderberry longhorn beetle and delta green ground beetle.

(D) *Crustaceans:* Vernal pool fairy shrimp, conservancy fairy shrimp, longhorn fairy shrimp, vernal pool tadpole shrimp, San Diego fairy shrimp, and Riverside fairy shrimp.

(E) *Plants:* Butte County meadowfoam, large-flowered wooly meadowfoam, Cook's lomatium, Contra Costa goldfields, Hoover's spurge, fleshy owl's clover, Colusa grass, hairy Orcutt grass, Solano grass, Greene's tuctoria, Sacramento Valley Orcutt grass, San Joaquin Valley Orcutt grass, slender Orcutt grass, California Orcutt grass, spreading navarretia, and San Jacinto Valley crownscale.

(f) *Can the control order be suspended?* We reserve the right to suspend or revoke a State's or Tribe's authority under this program if we find that the terms and conditions specified in the depredation order have not been adhered to by that agency. Final decisions to revoke authority will be made by the appropriate Regional Director. The criteria and procedures for suspension, revocation, reconsideration, and appeal are outlined in §§ 13.27 through 13.29 of this subchapter. For the purposes of this section, ''issuing officer'' means the Regional Director and ''permit'' means the authority to act under this control order. For purposes of § 13.29(e), appeals must be made to the Director. Additionally, at such time that we determine that resident Canada geese populations no longer pose direct threats to human health, we may choose to terminate part or all of the control order by subsequent regulation. In all cases, we will annually review the necessity and effectiveness of the control order.

(g) *Has the Office of Management and Budget (OMB) approved the information collection requirements of the control*

order? OMB has approved the information collection and recordkeeping requirements of the control order under OMB control number 1018–0133. We may not conduct or sponsor, and you are not required to respond to, a collection of information unless it displays a currently valid OMB control number. You may send comments on the information collection and recordkeeping requirements to the Service's Information Collection Clearance Officer, U.S. Fish and Wildlife Service, MS 222–ARLSQ, 1849 C Street, NW., Washington, DC 20240.

■ 11. Add § 21.61 to subpart E to read as follows:

§ 21.61 Population control of resident Canada geese.

(a) *Which Canada geese are covered by this regulation?* This regulation addresses the population control of resident Canada geese, as defined in § 21.3.

(b) *What is the resident Canada goose population control program, and what is its purpose?* The resident Canada goose population control program is a managed take program implemented under the authority of the Migratory Bird Treaty Act to reduce and stabilize resident Canada goose populations when traditional and otherwise authorized management measures are unsuccessful, not feasible for dealing with, or applicable, in preventing injury to property, agricultural crops, public health, and other interests from resident Canada geese. The Director is authorized to allow States and Tribes to implement a population control, or managed take, program to remedy these injuries. When authorized by the Director, managed take allows additional methods of taking resident Canada geese, allows shooting hours for resident Canada geese to extend to one-half hour after sunset, and removes daily bag limits for resident Canada geese inside or outside the migratory bird hunting season frameworks as described in this section. The intent of the program is to reduce resident Canada goose populations in order to protect personal property and agricultural crops and other interests from injury and to resolve potential concerns about human health. The management and control activities allowed or conducted under the program are intended to relieve or prevent damage and injurious situations. No person should construe this program as opening, reopening, or extending any hunting season contrary to any regulations established under section 3 of the Migratory Bird Treaty Act.

(c) *What areas are eligible to participate in the program?* When approved by the Director, the State and Tribal wildlife agencies of Alabama, Arkansas, Colorado, Connecticut, Delaware, Florida, Georgia, Illinois, Indiana, Iowa, Kansas, Kentucky, Louisiana, Maine, Maryland, Massachusetts, Michigan, Minnesota, Mississippi, Missouri, Montana, Nebraska, New Hampshire, New Jersey, New Mexico, New York, North Carolina, North Dakota, Ohio, Oklahoma, Pennsylvania, Rhode Island, South Carolina, South Dakota, Tennessee, Texas, Vermont, Virginia, West Virginia, Wisconsin, and Wyoming may implement the resident Canada goose population control program components in the Atlantic, Central, and Mississippi Flyway portions of these States.

(d) *What is required in order for State governments to participate in a managed take program?* Following the conclusion of the first full operational year of §§ 21.49 through 21.52 of this part, any wildlife agency from a State listed in 21.61(c) may request approval for the population control program. A request must include a discussion of the State's or Tribe's efforts to address its injurious situations utilizing the methods approved in this rule or a discussion of the reasons why the methods authorized by these rules are not feasible for dealing with, or applicable to, the injurious situations that require further action. Discussions should be detailed and provide the Service with a clear understanding of the injuries that continue, why the authorized methods utilized have not worked, and why methods not utilized could not effectuate resolution of the injuries. A State's request for approval may be for an area or areas smaller than the entire State. Upon written approval by the Director, any State or Tribal government responsible for the management of wildlife and migratory birds may, without permit, kill or cause to be killed under its general supervision, resident Canada geese under the following conditions:

(1) Activities conducted under the managed take program may not affect endangered or threatened species as designated under the Endangered Species Act.

(2) Control activities may be conducted under this section only between August 1 and August 30.

(3) Control measures employed through this section may be implemented only between the hours of one-half hour before sunrise to one-half hour after sunset.

(4) Nothing in the program may limit or initiate management actions on Federal land without concurrence of the Federal agency with jurisdiction.

(5) States and Tribes must designate participants who must operate under the conditions of the managed take program.

(6) States and Tribes must inform participants of the requirements/conditions of the program that apply.

(7) States and Tribes must keep annual records of activities carried out under the authority of the program. Specifically, information must be collected on:

(i) The number of individuals participating in the program;

(ii) The number of days individuals participated in the program;

(iii) The total number of resident Canada geese shot and retrieved during the program; and

(iv) The number of resident Canada geese shot but not retrieved. The States and Tribes must submit an annual report summarizing activities conducted under the program and an assessment of the continuation of the injuries on or before June 1 of each year to the Chief, Division of Migratory Bird Management, 4401 North Fairfax Drive, ms–MBSP–4107, Arlington, Virginia 22203.

(e) *What is required for individuals to participate in the program?* Individual participants in State and Tribal programs covered by the managed take program must comply with the following requirements:

(1) Participants must comply with all applicable State and Tribal laws or regulations including possession of whatever permit(s) or other authorization(s) may be required by the State or Tribal government concerned.

(2) Participants who take resident Canada geese under the program may not sell or offer for sale those birds or their plumage, but may possess, transport, and otherwise properly use them.

(3) Participants must permit at all reasonable times, including during actual operations, any Service special agent or refuge officer, State or Tribal wildlife or deputy wildlife agent, warden, protector, or other wildlife law enforcement officer free and unrestricted access over the premises on which such operations have been or are being conducted and must promptly furnish whatever information an officer requires concerning the operation.

(4) Participants may take resident Canada geese by any method except those prohibited as follows:

(i) With a trap, snare, net, rifle, pistol, swivel gun, shotgun larger than 10 gauge, punt gun, battery gun, machine

gun, fish hook, poison, drug, explosive, or stupefying substance.

(ii) From or by means, aid, or use of a sinkbox or any other type of low-floating device, having a depression affording the person a means of concealment beneath the surface of the water.

(iii) From or by means, aid, or use of any motor vehicle, motor-driven land conveyance, or aircraft of any kind, except that paraplegic persons and persons missing one or both legs may take from any stationary motor vehicle or stationary motor-driven land conveyance.

(iv) From or by means of any motorboat or other craft having a motor attached, or any sailboat, unless the motor has been completely shut off and the sails furled, and its progress has ceased. A craft under power may be used only to retrieve dead or crippled birds; however, the craft may not be used under power to shoot any crippled birds.

(v) By the use or aid of live birds as decoys. No person may take resident Canada geese on an area where tame or captive live geese are present unless such birds are, and have been for a period of 10 consecutive days before the taking, confined within an enclosure that substantially reduces the audibility of their calls and totally conceals the birds from the sight of resident Canada geese.

(vi) By means or aid of any motor-driven land, water, or air conveyance, or any sailboat used for the purpose of or resulting in the concentrating, driving, rallying, or stirring up of resident Canada geese.

(vii) By the aid of baiting, or on or over any baited area, where a person knows or reasonably should know that the area is or has been baited as described in § 20.11(j) and (k) of this part. Resident Canada geese may not be taken on or over lands or areas that are baited areas, and where grain or other feed has been distributed or scattered solely as the result of manipulation of an agricultural crop or other feed on the land where grown, or solely as the result of a normal agricultural operation as described in § 20.11(h) and (l) of this part. However, nothing in this paragraph prohibits the taking of resident Canada geese on or over the following lands or areas that are not otherwise baited areas:

(A) Standing crops or flooded standing crops (including aquatics); standing, flooded, or manipulated natural vegetation; flooded harvested croplands; or lands or areas where seeds or grains have been scattered solely as the result of a normal agricultural planting, harvesting, post-harvest manipulation or normal soil stabilization practice as described in § 20.11(g), (i), (l), and (m) of this part;

(B) From a blind or other place of concealment camouflaged with natural vegetation;

(C) From a blind or other place of concealment camouflaged with vegetation from agricultural crops, as long as such camouflaging does not result in the exposing, depositing, distributing, or scattering of grain or other feed; or

(D) Standing or flooded standing agricultural crops where grain is inadvertently scattered solely as a result of a hunter entering or exiting a hunting area, placing decoys, or retrieving downed birds.

(E) Participants may not possess shot (either in shotshells or as loose shot for muzzleloading) other than steel shot, bismuth-tin, tungsten-iron, tungsten-polymer, tungsten-matrix, tungsten-nickel iron, or other shots that are authorized in § 20.21(j) of this part.

(f) *Under what conditions would we suspend the managed take program?* Following authorization by the Director, we will annually assess the overall impact and effectiveness of the program on resident Canada goose populations to ensure compatibility with long-term conservation of this resource. If at any time evidence is presented that clearly demonstrates that resident Canada geese populations no longer need to be reduced in order to allow resolution or prevention of injury to people, property, agricultural crops, or other interests, the Director, in writing, will suspend the program for the resident Canada goose population in question. However, resumption of injuries caused by growth of the population and not otherwise addressable by the methods available in part 21 may warrant reinstatement of such regulations. A State must reapply for approval, including the same information and discussions noted in 21.61(d). Depending on the location of the injury or threat or injury, the Director, in writing, may suspend or reinstate this authorization for one or more resident Canada goose populations, but not others.

(g) *What population information is the State or Tribe required to collect concerning the resident Canada goose managed take program?* Participating States and Tribes must provide an annual estimate of the breeding population and distribution of resident Canada geese in their State. The States and Tribes must submit this estimate on or before August 1 of each year, to the Chief, Division of Migratory Bird Management, 4401 N. Fairfax Dr., MBSP–4107, Arlington, Virginia 22203.

(h) *What are the general program conditions and restrictions?* The program is subject to the conditions elsewhere in this section, and, unless otherwise specifically authorized, the following conditions:

(1) Nothing in this section applies to any Federal land within a State's or Tribe's boundaries without written permission of the Federal agency with jurisdiction.

(2) States may not undertake any actions under this section if the activities adversely affect other migratory birds or species designated as endangered or threatened under the authority of the Endangered Species Act. Persons operating under this section must immediately report the take of any species protected under the Endangered Species Act to the Service. Further, to protect certain species from being adversely affected by management actions, States must:

(i) Follow the Federal State Contingency Plan for the whooping crane;

(ii) Conduct no activities within 300 meters of a whooping crane or Mississippi sandhill crane nest; and

(iii) Follow all Regional (or National when available) Bald Eagle Nesting Management guidelines for all management activities.

(i) *Has the Office of Management and Budget (OMB) approved the information collection requirements of the program?* OMB has approved the information collection and recordkeeping requirements of the program under OMB control number 1018–0133. We may not conduct or sponsor, and you are not required to respond to, a collection of information unless it displays a currently valid OMB control number. You may send comments on the information collection and recordkeeping requirements to the Service's Information Collection Clearance Officer, U.S. Fish and Wildlife Service, MS 222—ARLSQ, 1849 C Street, NW., Washington, DC 20240.

Dated: July 6, 2006.

Matt Hogan,

Acting Assistant Secretary for Fish and Wildlife and Parks.

[FR Doc. 06–6739 Filed 8–9–06; 8:45 am]

BILLING CODE 4310–55–P

Federal Register

Thursday,
August 10, 2006

Part IV

Department of Energy

10 CFR Parts 820 and 835

Procedural Rules for DOE Nuclear Activities and Occupational Radiation Protection; Proposed Rule

DEPARTMENT OF ENERGY

10 CFR Parts 820 and 835

[Docket No. EH–RM–02–835]

RIN 1901–AA95

Procedural Rules for DOE Nuclear Activities and Occupational Radiation Protection

AGENCY: Department of Energy.

ACTION: Proposed rule and opportunity for public comment.

SUMMARY: The Department of Energy (DOE or the Department) proposes to amend its Procedural Rules for DOE Nuclear Activities, and its Occupational Radiation Protection requirements. The proposed amendments to the Procedural Rules for DOE Nuclear Activities would update its provisions to take into account the establishment of the National Nuclear Security Administration (NNSA). The proposed amendments to the Occupational Radiation Protection requirements would update its provisions to take into account lessons learned since the initial adoption of these regulations, input from the Defense Nuclear Facilities Safety Board (DNFSB) and members of the public, new recommendations from the International Commission on Radiological Protection (ICRP), and the establishment of the NNSA.

DATES: Public comments on the proposed rule must be received on or before October 10, 2006. A public hearing will be held on September 21, 2006 at the DOE Auditorium, located on 19901 Germantown Road, Germantown, Maryland. The hearing will be held from 9 a.m. to 12 noon and, if needed, from 1 p.m. to 4 p.m. All meeting attendees will be required to show a photo identification to access the DOE Germantown property and Auditorium. Motor vehicles will also be inspected when entering the DOE property.

Requests to speak at the public hearing should be mailed to Mr. Peter O'Connell, Office of Worker Protection Policy and Programs, U.S. Department of Energy, 1000 Independence Avenue, SW., Washington, DC 20585. You may also e-mail your request to speak to *Peter.O'Connell@eh.doe.gov* or telephone Mr. O'Connell at (301) 903–5641. Requests to speak must be received by September 7, 2006 for the Germantown, Maryland hearing. Each presentation is limited to no more than 10 minutes to ensure that all persons have an opportunity to speak.

ADDRESSES: You may submit comments, identified by Docket Number EH–RM–02–835 and/or RIN 1901–AA–95, by any of the following methods:

- *Federal eRulemaking Portal: http://www.regulations.gov.* Follow the instructions for submitting comments.
- *E-mail: Peter.O'Connell@eh.doe.gov.* Include Docket Number EH–RM–02–835 and/or RIN 1901–AA–95 in the subject line of the message.
- *Mail:* Mr. Peter O'Connell, Office of Worker Protection Policy and Programs (EH–52), U.S. Department of Energy, 1000 Independence Avenue, SW., Washington, DC 20585.

Copies of the public hearing transcript, written comments, and any other docket material may be reviewed and copied between 9 a.m. and 4 p.m., Monday through Friday, except Federal holidays, at the U.S. Department of Energy Freedom of Information Reading Room, Room 1E–190, 1000 Independence Avenue, SW., Washington, DC 20585, (202) 586–3142. The docket material for this rulemaking will be filed under ''EH–RM–02–835.''

The public hearing for this rulemaking will be held at the following address: DOE Auditorium, 19901 Germantown Road, Germantown, Maryland 20874–1290.

We encourage all interested persons to email a copy of their written comments, if possible, to avoid delays that have occurred in processing mail addressed to the Department. However, we request that you send one signed copy of your comments for the record.

Copies of any docket material may be reviewed and copied between 9 a.m. and 4 p.m., Monday through Friday, except Federal holidays, at the U.S. Department of Energy Freedom of Information Reading Room, Room 1E–190, 1000 Independence Avenue, SW., Washington, DC 20585, (202) 586–3142. The docket material for this rulemaking will be filed under ''EH–RM–02–835.''

FOR FURTHER INFORMATION CONTACT: For further information concerning public participation in this rulemaking proceeding, see Section VI of this notice of proposed rulemaking (Opportunity for Public Comment).

SUPPLEMENTARY INFORMATION:

I. Introduction and Background for Proposed Changes to 10 CFR Part 820
A. What is the Purpose and History of 10 CFR Part 820?
B. Why is DOE Proposing Changes to 10 CFR Part 820?
C. In General, What are the Proposed Changes to 10 CFR Part 820?
II. Summary of Changes to 10 CFR Part 820
A. What are the Proposed Changes with Respect to References to the Deputy Assistant Secretary for Naval Reactors?
B. What are the Proposed Changes in the Definition of ''Secretarial Officer''?
C. What are the Proposed Changes Relating to Investigations?
D. What is the Proposed Change Relating to Direction of NNSA Contractors?
E. What Changes are Being Proposed to the Appendix on Enforcement Policy?
III. Introduction and Background for Proposed Changes to 10 CFR Part 835
A. What is the Purpose and History of 10 CFR Part 835?
B. Why is DOE Proposing Changes to 10 CFR Part 835?
C. In General, What are the Proposed Changes to 10 CFR Part 835?
IV. Summary of Changes to 10 CFR Part 835
A. What are the Proposed Changes to the Scope of 10 CFR Part 835?
B. What are the Proposed Changes to the Definitions in 10 CFR Part 835?
C. What is the Proposed Change to Radiological Units in 10 CFR Part 835?
D. What is the Effect of the Proposed Change on Radiation Protection Programs?
E. What is the Proposed Change in the General Requirements for Monitoring Individuals and Areas in 10 CFR Part 835?
F. What is the Proposed Change in the Monitoring of Packages Containing Radioactive Material in 10 CFR Part 835?
G. What is the Proposed Change in the Exception for Labeling Requirements in 10 CFR Part 835?
H. What are the Proposed Changes in the Individual Monitoring Records Requirements in 10 CFR Part 835?
I. What are the Proposed Changes to Radiation Safety Training?
J. What are the Proposed Changes in the Design and Control Requirements in 10 CFR Part 835?
K. What are the Proposed Changes in the General Provisions to Emergency Exposure Situations in 10 CFR Part 835?
L. What are the Proposed Changes to the DAC Values, Introductory Paragraph, and Footnotes in Appendix A in 10 CFR Part 835?
M. What are the Proposed Changes to the DAC Values, Introductory Paragraph, and Footnotes in Appendix C in 10 CFR Part 835?
N. What are the Proposed Changes to the Text and Footnotes in Appendix D in 10 CFR Part 835?
O. What are the Proposed Changes to the Text and Footnote in Appendix E in 10 CFR Part 835?
P. For these Proposed Changes in 10 CFR Part 835, Does DOE Plan to Issue Guidance Documents?
Q. Would a Contractor Need to Submit Any Documents for DOE Approval?
V. Procedural Requirements
A. Review Under the National Environmental Policy Act
B. Review Under Executive Order 12866
C. Review Under Regulatory Flexibility Act
D. Review Under the Paperwork Reduction Act of 1995
E. Review Under Executive Order 13132
F. Review Under the Unfunded Mandates Reform Act of 1995
G. Review Under Executive Order 12988
H. Review Under the Treasury and General Government Appropriations Act, 1999

I. Review Under Executive Order 13211
J. Review Under the Treasury and General Government Appropriations Act, 2001
K. Approval of the Office of the Secretary of Energy
VI. Opportunity for Public Comment
A. Written Comments
B. Public Hearing

I. Introduction and Background for Proposed Changes to 10 CFR Part 820

A. What is the Purpose and History of 10 CFR Part 820?

Part 820 sets forth the procedural rules relating to DOE nuclear safety requirements. Among other things, 10 CFR part 820 sets forth the process for granting exemptions from nuclear safety requirements and the process for issuing civil penalties for violations of nuclear safety requirements. DOE proposed 10 CFR part 820 on December 9, 1991 (56 FR 64290) and issued a clarification on May 15, 1992 (57 FR 20796). DOE published 10 CFR part 820 as a final rule on August 17, 1993 (58 FR 43680) and amended it on October 8, 1997 (62 FR 52479) and on March 22, 2000 (65 FR 15218).

B. Why is DOE Proposing Changes to 10 CFR Part 820?

The legislation that established the NNSA contained several provisions that affect 10 CFR part 820. In particular, non-NNSA personnel (other than the Secretary and Deputy Secretary) are prohibited from giving direction to NNSA contractors. In addition, several Assistant Secretaries and the Deputy Assistant Secretary for Naval Reactors were converted into NNSA Deputy Administrators. Since the establishment of the NNSA, 10 CFR part 820 has been applied in a manner consistent with these provisions. The proposed changes would revise 10 CFR part 820 to reflect these provisions explicitly.

C. In General, What are the Proposed Changes to 10 CFR Part 820?

The proposed changes to 10 CFR part 820 would: (1) Revise references to the Deputy Assistant Secretary for Naval Programs to reflect conversion of the Deputy Assistant Secretary into a Deputy Administrator; (2) include NNSA Administrator and Deputy Administrators in the definition of Secretarial Officer; (3) clarify that, with respect to NNSA contractors, the Secretarial Officer primarily responsible for environment, safety and health matters is the NNSA Deputy Administrator with such responsibility; (4) formalize the use of enforcement letters; and (5) make explicit the role of NNSA in giving direction to NNSA contractors pursuant to 10 CFR part 820.

II. Summary of Changes to 10 CFR Part 820

A. What are the Proposed Changes with Respect to References to the Deputy Assistant Secretary for Naval Reactors?

The NNSA Act converted the Deputy Assistant Secretary for Naval Reactors into the Deputy Administrator for Naval Reactors. DOE is proposing to revise 820.1(c) by replacing the phrase ''Assistant Secretary for Naval Reactors'' with ''Deputy Administrator for Naval Reactors.'' DOE also is proposing to delete the last sentence in the definition of ''Secretarial Officer'' because the inclusion of ''Deputy Administrator'' in the first sentence makes the last sentence unnecessary. In addition, DOE is proposing to update the citation for the Naval Nuclear Propulsion Program to include Public Law 106–65. No substantive change in the treatment of the Office of Naval Reactors under 10 CFR part 820 is being proposed.

B. What are the Proposed Changes in the Definition of ''Secretarial Officer''?

The NNSA Act converted several Assistant Secretaries into Deputy Administrators. DOE is proposing to include the phrase ''Deputy Administrator'', in addition to the phrase ''NNSA Administrator'', in the definition of ''Secretarial Officer'' to reflect this change. In addition, DOE is proposing to add a sentence to the definition of ''Secretarial Officer'' to make clear that, with respect to NNSA activities, the Secretarial Officer primarily responsible for environment, safety and health matters is the NNSA Administrator or NNSA Deputy Administrator with such responsibilities.

C. What Are the Proposed Changes Relating to Investigations?

DOE is proposing to add two new subsections to 820.21 to codify current practices. Proposed 820.21(g) would recognize the use of enforcement letters to communicate expectations during an investigation into a possible violation of a nuclear safety requirement. Proposed 820.21(h) would recognize that the Director may sign, issue and serve subpoenas during an investigation.

D. What Is the Proposed Change Relating to Direction of NNSA Contractors?

The NNSA Act provides at 50 U.S.C. 2410(b) that non-NNSA personnel (other than the Secretary and Deputy Secretary) are prohibited from giving direction to NNSA contractors. Since the establishment of the NNSA, the NNSA and other elements of DOE, including the Office of Enforcement, have worked together to ensure 10 CFR part 820 operated in a manner consistent with section 2410(b). DOE is proposing a new section (820.13) to codify current practices and make clear that NNSA is responsible for signing, issuing and serving actions that give direction to NNSA contractors.

E. What Changes Are Being Proposed to the Appendix on Enforcement Policy?

DOE is proposing to update the Appendix on Enforcement Policy to reflect the proposed changes to 10 CFR part 820.

III. Introduction and Background for Proposed Changes to 10 CFR Part 835

A. What Is the Purpose and History of 10 CFR Part 835?

10 CFR part 835 sets forth the nuclear safety requirements that provide radiological protection for DOE workers and members of the public. DOE proposed 10 CFR part 835 on December 9, 1991 (56 FR 64334) and published it as final on December 14, 1993, (58 FR 65458). DOE amended 10 CFR part 835 on November 4, 1998, (63 FR 59662).

B. Why Is DOE Proposing Changes to 10 CFR Part 835?

DOE is proposing changes for a number of reasons. In some cases, an analysis of the operating experience with 10 CFR part 835 indicates DOE's needs can be met more effectively if there is a change. In other cases, the Defense Nuclear Facilities Safety Board or members of the public have suggested changes. In addition, the International Commission on Radiological Protection (ICRP) has issued newer recommendations on areas covered by 10 CFR part 835.

C. In General, What Are the Proposed Changes to 10 CFR Part 835?

The proposed changes to 10 CFR part 835 would: (1) Clarify which requirements in 10 CFR part 835 apply to radioactive material transportation, (2) exclude from the scope of 10 CFR part 835 material, equipment and real property approved for release in accordance with DOE approved authorized limits which have been approved by a Secretarial Officer in consultation with the Office of the Assistant Secretary for Environment, Safety and Health, (3) update the dosimetric models and dose terms to be consistent with newer recommendations from ICRP, including use of updated tissue and radiation weighting factors and updated derived air concentration values, (4) establish derived air concentration values for tritiated

particulate aerosols and organically bound tritium, (5) lower the upper limit on the amount of material which need not be labeled, (6) allow use of thresholds for recording occupational exposures, (7) establish derived air concentration default values for radionuclides not listed in the rule, (8) clarifies the role of NNSA to approve planned special exposures and approve dosimetry monitoring programs that are substantially equivalent to those accredited by the DOE Laboratory Accreditation Program (DOELAP), (9) establish strontium-90 contamination limits based on the percentage of strontium-90 in contamination consisting of mixed fission products, and (10) revise values in Appendix E to be consistent with newer dosimetric models and add values for tritiated particulates and organically bound tritium.

IV. Summary of Changes to 10 CFR Part 835

A. What are the Proposed Changes to the Scope of 10 CFR Part 835?

1. *Material, Equipment and Real Property Exclusion.* DOE proposes to amend § 835.1 (Scope) by inserting a new paragraph (b)(6) which would exclude radioactive material on or within material, equipment and real property that is approved for release when the radiological conditions of the material, equipment and real property have been documented to comply, pursuant to DOE Order 5400.5, Radiation Protection of the Public and the Environment, with the criteria for release set forth in a DOE authorized limit which has been approved by a Secretarial Officer in consultation with the Office of the Assistant Secretary for Environment, Safety and Health. As DOE moves to a more risk based approach to radiological protection, inconsistencies may arise between DOE's occupational radiation protection requirements, which are prescribed for a specified radiological hazard, and DOE's environmental radiation protection requirements, which may be applied based on an assessment of risk. Under DOE Order 5400.5, real property on a DOE site and material and equipment from a DOE site may be released for unrestricted or restricted use by members of the public in accordance with a process to determine the risk to an individual from the residual radioactive material remaining on or within the material, equipment or property. Such material, equipment or property may sometimes contain contaminated surfaces which exceed the surface contamination levels in 10 CFR part 835 appendix D. The appendix D values trigger application of occupational radiological control for contaminated areas. Accordingly, under the current requirements, even though DOE may have determined that this material, equipment or property poses a minimal risk to individuals, if DOE activities are still associated with the material, equipment or property, certain radiological controls in 10 CFR part 835, such as those for access control, posting and training must be applied to portions of this material, equipment or property.

To eliminate this potential inconsistency, DOE proposes a new section 835.1(b)(6) that would exclude from the scope of 10 CFR part 835 radioactive material on or within material, equipment and real property which has been approved by DOE for release. This exclusion would only apply when the radiological conditions of the material, equipment and property, and the method for meeting the conditions, have been documented to comply with criteria for release specified in a DOE authorized limit for that material, equipment and property, and the criteria have been approved by a Secretarial Officer in consultation with the Office of the Assistant Secretary for Environment, Safety and Health. DOE recognizes that, depending on the potential exposure, this level of approval may be higher than that required by DOE Order 5400.5. However, this level of approval is consistent with other provisions of 10 CFR part 835 for which there are alternative means of compliance, such as alternatives to the DOELAP, use of planned special exposures, and exemption from specified provisions of 10 CFR part 835. The requirement for consultation with the Office of the Assistant Secretary for Environment, Safety and Health would be satisfied by providing copies of a Secretarial Officer's approved authorized limits and supporting documentation to the cognizant office within the Office of the Assistant Secretary for Environment, Safety and Health (currently the Office of Air, Water and Radiation Protection Policy and Guidance (EH–41)) for review and comment. EH–41 will coordinate the review and comment with EH–52. After comments have been resolved, the consultation process is complete. The intent for this proposed change is to allow for the exclusion to apply even for material, equipment or property which has not yet been released from DOE control.

2. *Radioactive Material Transportation.* DOE proposes to revise section 835.1 to clarify which requirements in 10 CFR part 835 apply to the transportation of radioactive material by or on behalf of the DOE. Specifically, existing 835.1(b)(4) would be deleted and replaced by a new 835.1(d) that would state clearly that subparts F (Entry Control Program) and G (Posting and Labeling) do not apply to radioactive material transportation conducted by a DOE individual or DOE contractor, when the radioactive material is under the continuous observation and control of an individual who is knowledgeable of and implements required exposure control measures. This proposed change is not intended to affect the existing situation where the requirements in the other subparts of 10 CFR part 835 do apply to radioactive material transportation.

DOE does not intend Part 835 to apply to transportation by the U.S. Postal Service or a commercial carrier, such as Fedex or UPS, that transport radioactive material as part of their normal operations. A company or subsidiary of a corporation that operates a DOE facility would not be considered a commercial carrier—even if such an organization transports radioactive material as part of their contractual agreement with DOE. This position is consistent with NRC practice. See, for example, 10 CFR 30.13, 40.12, and 70.12. DOE is requesting comments as to whether there should be an explicit exclusion of these carriers.

DOE also is proposing editorial changes to the definition of ''radioactive material transportation'' in § 835.2(a). These proposed changes are not intended to affect the existing scope of this definition, which excludes activities related to transportation such as the preparation of material or packagings for transportation, storage of material awaiting transportation, or application of markings and labels required for transportation.

B. What are the Proposed Changes to the Definitions in 10 CFR Part 835?

DOE proposes to change most of the dosimetric terms used in 10 CFR part 835 to reflect the recommendations for assessing dose and associated terminology from ICRP Publications 60 and 68. DOE proposes this change mainly because these recommendations are based on updated scientific models and more accurately reflect the occupational doses to workers than the models currently used by DOE, i.e., the models used in developing Radiation Protection Guidance to Federal agencies for Occupational Exposures (Environmental Protection Agency, 52 FR 2822, January 27, 1987) which are based upon 1977 recommendations from the ICRP. DOE notes that other

Federal agencies, including the Environmental Protection Agency (EPA), the Food and Drug Administration, and the National Institute of Occupational Safety and Health (NIOSH), have already adopted the current ICRP recommendations in recent guidance documents and requirements. NIOSH uses the newer recommendations in performing DOE worker dose assessments under the Energy Employees Occupational Illness Compensation Program Act of 2000, which is contained in the Floyd D. Spence National Defense Authorization Act for Fiscal Year 2001 (Public Law 106–398). The EPA has adopted the recommendations in Federal Guidance Report Number 13, Cancer Risk Coefficients for Environmental Exposure to Radionuclides. In addition, recommendations published by the National Council on Radiation Protection and Measurements (NCRP) for the past several years, as well as several standards issued by the American National Standards Institute, have used the newer dosimetric quantities and units endorsed by the ICRP.

Consistent with the current rule, internal doses would still be calculated based on a 50 year committed dose. The following ''cross-walk'' is provided to show the new terms DOE proposes in this rulemaking and the current definitions of terms that would be replaced:

Current dosimetric definitions	Proposed dosimetric definitions
Committed effective dose equivalent.	Committed effective dose.
Committed dose equivalent.	Committed equivalent dose.
Cumulative total effective dose equivalent.	Cumulative total effective dose.
Deep dose equivalent	Deep equivalent dose.
Dose equivalent	Equivalent dose.
Effective dose equivalent.	Effective dose.
Lens of the eye dose equivalent.	Lens of the eye equivalent dose.
Quality factor	Radiation weighting factor.
Shallow dose equivalent.	Shallow equivalent dose.
Weighting factor	Tissue weighting factor.
Total effective dose equivalent.	Total effective dose.

Note: Throughout the text of the proposed rule, the above terms would be revised.

In addition, the following definitions would be revised: Annual limit on intake, Derived air concentration, Radiation area, Radiological worker, Dose, External dose or exposure, and Internal dose or exposure. Also, consistent with ICRP Publication 60, the table of weighting factors for neutrons would no longer list a column for neutron flux density.

DOE recognizes that the proposed changes to most of the dosimetric terms used in 10 CFR part 835 to reflect the recommendations for assessing dose and associated terminology from ICRP Publications 60 and 68 will require revising many site documents and the updating of training materials. Although, in June 2004, the ICRP released a draft of updated recommendations, which include some adjustment of Tissue Weighting Factors and Radiation Weighting Factors, DOE believes that this is still an opportune time to make these changes rather than waiting for the draft recommendations to be finalized. It may be several years before the ICRP will finalize and issue the revised recommendations and accompanying dose conversion factors. DOE evaluated the effect of the proposed revisions to Tissue Weighting Factors on derivation of dose conversion factors. The evaluation found, for radionuclides of most interest to DOE, that the ICRP proposed Tissue Weighting Factors revisions would have minimal impact on the secondary limits derived using the Tissue Weighting Factors (i.e., the Derived Air Concentrations and Sealed Radioactive Source Accountability values). Any future need by DOE to revise weighting factors should have minimal administrative impact for such activities as revising procedures and training materials. It is envisioned that, over time, updated recommendations to make revisions to dosimetry calculation models will periodically be made by national and international consensus groups. Given that fact, and the significant financial and resource impact, DOE recognizes that historical doses, recorded and reported to individuals prior to the effective implementation date of this proposed amendment, should still be considered to be the official dose of record. Barring some other unforeseen reason, e.g., discovery of a site or vendor specific miscalculation in assigned doses, DOE would not require the updating of historical doses to reflect these changes. DOE considered several options for this proposed change including:

- Allowing sites to choose either converting to the newer dosimetric terminology and Tissue and Radiation Weighting Factors or remaining with the existing terminology and Tissue and Radiation Weighting Factors;
- Not specifying in the Rule a specific set of Tissue and Radiation Weighting Factors, but requiring sites to specify in their DOE approved Radiation Protection Program the weighting factors to be used and the technical basis for that determination;
- Updating the Tissue and Radiation Weighting Factors to reflect the newer research without revising the dose terminology;
- Updating the Tissue and Radiation Weighting Factors to reflect the newer research and revising the dose terminology; and
- Converting to the newer dosimetric terminology and Tissue and Radiation Weighting Factors and not updating the Derived Air Concentration values (Appendices A and B to part 835) and Appendix E to part 835 values.

DOE considers the best approach to convert all terminology and methodology, including the appendix A, B and E to part 835 values, to reflect ICRP Publications 60 and 68. However, DOE solicits comments on these different options.

DOE recognizes that the dosimetric changes will result in the need to update numerous site documents and proposes a three year implementation schedule to alleviate the burden of making the changes (i.e., many of the changes can be made during the regularly scheduled document updating processing). An extended implementation date also would recognize that the benefit of updating documents to reflect the dosimetric changes may not justify the cost at sites nearing closure. For closure sites which are scheduled to continue operation beyond the implementation date for the proposed changes, the exemption process in 10 CFR part 820 may be used to request relief, if appropriate. DOE requests input on any other constructive ways to reduce the costs of implementing this proposed change.

As discussed in other sections of this preamble, the definitions of ''authorized limit'' and ''real property'' would be added and the definition of ''radioactive material transportation'' would be revised.

C. What Is the Proposed Change to Radiological Units in 10 CFR Part 835?

DOE proposes to revise the text of § 835.4 to allow use of additional units, such as dpm, mass units, uCi/cc, and dpm/100cm^2, in records required by this part. The original intent of this provision was to preclude the exclusive use of the SI units of becquerel, gray and sievert. The intent was not to preclude use of other conventional units, such as the ones previously listed. This

proposed change would achieve the original intent.

D. What Is the Effect of the Proposed Change on Radiation Protection Programs?

DOE is proposing to add a new sentence at the end of § 835.101(f) that would read ''Unless otherwise specified in this part, compliance with the amendment to this part published on August 10, 2006, [DATE OF PUBLICATION IN THE FR] shall be achieved no later than [DATE 3 YEARS FOLLOWING THE EFFECTIVE DATE OF THE FINAL RULE].'' DOE is proposing to require compliance with the amended requirements of this part to be achieved no later than three years after the effective date of this amendment. The reasons for an extended implementation date are the same as those discussed in connection with the proposed changes to the dosimetric terms.

E. What Is the Proposed Change in the General Requirements for Monitoring Individuals and Areas in 10 CFR Part 835?

DOE proposes to amend § 835.401(a)(5) by revising the text ''engineering and process controls'' to read ''engineering and administrative controls''. This change is proposed in order to make the use of the terms consistent with DOE Policy 450.4 ''Safety Management System Policy''. DOE considers the terms to be equivalent.

F. What Is the Proposed Change in the Monitoring of Packages Containing Radioactive Material in 10 CFR Part 835?

Certain DOE sites have stated that the requirement in § 835.405(c)(2) to perform a measurement of radiation levels was unclear. Under this provision, a measurement of radiation levels is required for receipt of packages of radioactive material ''unless the package contains less than a Type A quantity (as defined at 10 CFR 71.4) of radioactive material''. The definition of a Type A quantity in 10 CFR 71.4 is a quantity of radioactive material which does not exceed a value provided in a specified table. Any quantity of radioactive material less than or equal to the value provided in the table is a Type A quantity. For example, if the table lists a quantity of 16 Curies (Ci) for an isotope, any quantity of that isotope up to and including 16 Ci is a Type A quantity. DOE received statements that the only quantity less than a Type A quantity would be a zero quantity or a negative quantity.

The intent of the requirement has always been that a measurement of the radiation level is required for receipt of packages containing more than a Type A quantity. Title 10 CFR 71.4 defines a Type B quantity as a quantity of radioactive material which exceeds a Type A quantity. Accordingly, to clarify the requirement, DOE proposes to amend § 835.405(c)(2) by changing ''unless the package contains less than a Type A quantity'' to ''if the package contains a Type B quantity''.

G. What Is the Proposed Change in the Exception for Labeling Requirements in 10 CFR Part 835?

DOE proposes to establish an upper limit of 0.1 Ci for a quantity of radioactive material which would be excepted from the labeling requirement in § 835.606(a)(2). After the establishment of the radioactive material labeling requirements in the 1998 amendment to 10 CFR part 835, it was noted that the exception to labeling requirements for radioactive materials appeared excessive for certain isotopes. DOE exempts from labeling items and containers if a quantity of radioactive material is less than one tenth of the values specified in appendix E of 10 CFR part 835. For some isotopes this quantity is significant. For example, a container of tritiated water does not need to be labeled ''Caution, Radioactive Material'' as long as there is less than 16 Ci of tritiated water in the container. While the basis for this exception, as discussed in the preamble to the 1998 amendment to 10 CFR part 835, is technically defensible, DOE believes that it is prudent to establish an upper limit for the labeling exception. The approach DOE is proposing is similar to that taken by the NRC, with the exception that the NRC upper limit is 0.001 Ci. DOE believes that the 0.1 Ci upper limit would provide an acceptable level of protection, based on the exposure scenario discussed in the preamble to the 1998 amendment (63 FR 59662), and still provides for sufficient operational flexibility in not being overly restrictive in the labeling requirements.

H. What Are the Proposed Changes in the Individual Monitoring Records Requirements in 10 CFR Part 835?

DOE proposes to revise § 835.702(b) to give sites the option of not assessing and recording any internal dose monitoring result estimated to be less than 10 millirem committed equivalent dose. This change is proposed in response to concerns that, under the current requirements, there is no threshold of positive internal dose monitoring result which need not be assessed and a dose recorded. DOE believes that this flexibility will be of most benefit for routine bioassay results from tritium and uranium operations. In particular for tritium, current requirements for recording internal doses may be considered to be overly burdensome. For tritium, positive bioassay results could result in needing to determine and record doses that are less than one millirem. The proposed revision allows some relief from needing to perform a dose assessment and to record these very small doses. This may most easily be achieved through the development and use of default values, below which no further dose assessment or recording is required. Establishing a dose threshold for any single bioassay and/or air monitoring result makes the DOE requirements consistent with nationally accepted standards as discussed in American National Standard for Design of Internal Dosimetry Programs (ANSI/HPS N13.39–2000). The provision still requires the maintenance of bioassay and/or air monitoring results in case they are needed by DOE in the future.

DOE's policy has been that the current monitoring threshold of 100 millirem should not be interpreted as an objective for internal dose monitoring (*i.e.*, DOE fully recognizes that routine internal dose monitoring is not capable of detecting doses at the monitoring threshold for some radionuclides). Consistent with that policy, these proposed threshold values for assessing internal dose should not be construed as the establishment of thresholds for internal dose monitoring.

The proposed revision would provide flexibility for assessing and recording doses for any single bioassay and/or air monitoring result and also includes an annual limit for doses that need not be assessed or recorded based on 50 percent of the applicable monitoring threshold at §§ 835.402(c)(1) through (4). DOE recognizes that sites wishing to invoke the flexibility offered by this proposed change would need to develop and implement a program to track bioassay results to ensure that dose constraints are not exceeded without recording the doses. DOE will provide guidance on acceptable implementation methods.

I. What Are the Proposed Changes to Radiation Safety Training?

DOE proposes to amend § 835.901(b) by adding the text ''applied training,'' after ''by successful completion of.'' The training and applied training is to be commensurate with the hazards in the area and the required controls. DOE already requires, in § 835.901(c), that

each individual demonstrate knowledge of the radiation safety training topics by successful completion of an examination and performance demonstrations. The current requirement for performance demonstration implies that the training will include practical factors or ''applied training''. Accordingly, DOE considers the proposed change to be only editorial.

DOE is considering options for adding a provision for retention testing. DOE has provided, and still maintains several guidance documents which address retention testing. These include:

- DOE G 441.1–12, Radiation Safety Training Implementation Guide
- DOE–STD–1098–99, Radiological Control
- DOE–HDBK–1131–98, General Employee Radiological Training
- DOE–HDBK–1130–98, Radiological Worker Training

In particular, DOE–HDBK–1131–98 includes an attachment ''Evaluating the Effectiveness of Radiological Training.'' This attachment discusses a recommended approach to implementing a retention testing program. DOE is soliciting comments on including, in 10 CFR part 835, a requirement for retention testing.

In addition, DOE is soliciting comments on adding a provision, in subpart J, for radiological control technician (RCT) training. Currently, 10 CFR part 835 requires individuals responsible for developing and implementing measures necessary for ensuring compliance with the requirements of 10 CFR part 835 to have the appropriate education, training, and skills. This provision applies to RCTs. To assist sites in meeting this requirement, DOE has provided, and continues to maintain, several guidance documents discussing the training, retraining and qualifications of RCTs. These include:

- DOE G 441.1–1, Management and Administration of Radiation Protection Programs Implementation Guide
- DOE–STD–1098–99, Radiological Control
- DOE STD–1107–97, Knowledge, Skills, and Abilities for Key Radiation Protection Positions at DOE Facilities
- DOE–DBK–1122–99, Radiological Control Technician Training.

All of the above provide guidance on DOE's expectations for the appropriate level of training, retraining, testing and qualification of RCTs. DOE is soliciting comments on including, in 10 CFR part 835, requirements for RCT of training, retraining, testing and qualification.

J. What Are the Proposed Changes in the Design and Control Requirements in 10 CFR Part 835?

DOE proposes to amend § 835.1001(a) by replacing the text ''physical design features and administrative control'' with ''engineering and administrative controls''. DOE also proposes to amend § 835.1001(b) by replacing the text ''physical design features'' with ''engineering controls'' and proposes to amend § 835.1003 by replacing the text ''physical design features and administrative controls'' with ''engineering and administrative controls''. These changes are proposed in order to make the use of the terms consistent with DOE Policy 450.4 ''Safety Management System Policy''. DOE considers the terms to be equivalent.

K. What Are the Proposed Changes in the General Provisions to Emergency Exposure Situations in 10 CFR Part 835?

DOE proposes to amend the general provisions to emergency exposure situations to clarify that the resumption of operations, pursuant to § 835.1301(d), only applies to operations which have been suspended as a result of a dose in excess of the limits specified in section § 835.202. DOE considers the proposed change to be only editorial.

L. What Are the Changes to the DAC Values, Introductory Paragraph, and Footnotes in Appendix A to 10 CFR Part 835?

One of the options discussed earlier in this preamble is the adoption of the system of dosimetry for intake of radioactive materials set forth in more recent ICRP Publications. Because provisions pertaining to the control of internal dose reference appendix A, DOE proposes to modify the derived air concentration values contained in appendix A to reflect the previously mentioned ICRP publications. The salient changes would be:

- The use of updated dose per unit intake conversion factors specified in ICRP Publication 68 instead of the dose per unit intake conversion factors in the EPA Federal Guidance Report Number 11, Limiting Values of Radionuclide Intake and Air Concentration and Dose Conversion Factors for Inhalation, Submersion, and Ingestion, which is the basis for the current appendix A values. ICRP Publication 68 lists committed effective dose coefficients which are used in deriving the derived air concentration limit based on the stochastic limit of 5 rem. In order to determine if the non-stochastic (organ) limit of 50 rem to any organ or tissue is more limiting, DOE used the ICRP computer program, The ICRP Database of Dose Coefficients: Workers and Members of the Public, ISBN 0 08 043 8768. As in the current set of derived air concentration values, the more limiting value (stochastic or non-stochastic) is used.
- The use of the ICRP Publication 66 classification of radioactive material by absorption rate [F(fast), M(medium), and S(slow)] instead of by lung clearance classes [D(days), W(weeks), and Y(years)] as specified in ICRP Publication 30.
- The use of default particle size distribution of 5 μm instead of a default particle size distribution of 1 μ if the actual particle size distribution is not known.

These proposed changes are explained in the introduction to appendix A.

In addition to the changes in the dosimetric models used to calculate the DACs in appendix A, several other changes to this appendix are proposed. One proposed change is to establish derived air concentration values for tritiated particulate aerosols, insoluble organically bound tritium and default values for radionuclides not listed in the appendix.

Subsequent to the November 4, 1998, amendment to 10 CFR part 835, Occupational Radiation Protection (63 FR 59662), the Department and its contractors have been researching and developing appropriate guidance for individual exposure to tritiated particulate aerosols and insoluble organically bound tritium. In 1999, the DOE Office of Worker Protection Policy and Programs (EH–52) issued Radiological Control Technical Position RCTP 99–02, Acceptable Approach for Developing Air Concentration Values for Controlling Exposures to Tritiated Particulate Aerosols and Organically-Bound Tritium, which provided guidance on use of acceptable air concentration values. In 2004 EH–52 also published a technical standard, Radiological Control Programs for Special Tritium Compounds, DOE–HDBK–1184–2004, which provides additional guidance on use of acceptable air concentration values. The ICRP publications do not list dose coefficients for tritiated particulate aerosols and do not specifically address insoluble organically bound tritium. Therefore, DOE proposes including derived air concentration values for these substances based on the methodology described in DOE–HDBK–1184–2004, adjusted to use the ICRP 60 dosimetric quantities. This handbook is available for review at: *http://*

www.eh.doe.gov/radiation/ts.html and the Freedom of Information Reading Room.

Appendix A to 10 CFR part 835 does not include default values for radionuclides not listed in the appendices. Consistent with the NRC practice, DOE proposes to establish default values for radionuclides not listed in appendix A. One default value would apply for any isotope not already listed with a decay mode other than alpha emission or spontaneous fission and with a radioactive half-life greater than two hours. The default value would be the most restrictive applicable derived air concentration value already listed in appendix A for that type of decay, *i.e.*, 1.E–10 μCi/ml (4 Bq/m^3). The second default value would apply for any isotope not already listed with a decay mode of alpha emission or spontaneous fission, or any mixture for which the identity or the concentration of any radionuclide in the mixture is not known. The default value would likewise be the most restrictive applicable derived air concentration value already listed in appendix A, *i.e.*, 2.E–13 μCi/ml (8.E–03 Bq/m^3).

M. What Are the Proposed Changes to the DAC Values, Introductory Paragraph, and Footnotes in Appendix C to 10 CFR Part 835?

DOE proposes to amend appendix C to 10 CFR part 835 by changing the term ''contaminated atmospheric cloud'' to ''cloud of airborne radioactive material''. DOE considers this change to be only editorial. Consistent with DOE's proposal to adopt the system of dosimetry for intake of radioactive materials set forth in more recent ICRP publications, DOE proposes to replace the air immersion derived air concentration values in appendix C with new values which were determined using ICRP Publication 68 methodology. Specifically, the proposed values are derived from the dose conversion factors in Annex D of ICRP publication 68 and assumes 250 days (50 weeks times 5 days per week) exposure per year to get an effective dose of 5 rem in a year. Consistent with the NRC, DOE also proposes to establish a default value for any single radionuclide not listed in the appendix. The default value would apply for any isotope not already listed with a decay mode other than alpha emission or spontaneous fission and with a radioactive half-life less than two hours. The derived air concentration would be the most restrictive value already listed, *i.e.*, 6.E–06 μCi/ml (2.E+04 Bq/m^3).

N. What Are the Proposed Changes to the Text and Footnotes in Appendix D to 10 CFR Part 835?

Several changes to appendix D are proposed in order to codify guidance issued by the Department in Radiological Control Technical Positions (RCTP) and to enhance the clarity of this section. In 10 Code of Federal Regulations Part 835 Appendix D—Surface Radioactivity Values, RCTP 96–02, DOE provided guidance on the application of footnote 5 to this appendix that addresses surface contamination values for mixed fission products containing Sr-90. Based on this guidance, DOE proposes to revise appendix D as follows: In the second group of nuclides (total surface radioactivity value—1000 dpm/100 cm^2; removable surface radioactivity value—200 dpm/100 cm^2) the parenthetical phrase ''including mixed fission products where the Sr-90 fraction is 90 percent or more of the total activity'' would be inserted. A new group would be added to appendix D (between the existing second and third groups) that consists of mixed fission products where the Sr-90 fraction is more than 50 percent but less than 90 percent of the total activity. For this new group, the total surface radioactivity value would be 3000 dpm/100 cm^2 and the removable surface radioactivity value would be 600 dpm/100 cm^2. In the group of beta-gamma emitters (total surface radioactivity value—5000 dpm/100 cm^2; removable surface radioactivity value—1000 dpm/100 cm^2) the term ''Sr-90 and others'' would be replaced by the word ''those''.

In addition, DOE proposes to clarify footnote seven to Appendix D by replacing the term ''(alpha)'' with the sentence ''These limits only apply to the alpha emitters within the respective decay series.

DOE is not proposing changes to the surface radioactivity values in Appendix D at this time. DOE is aware of newly developed surface radioactivity criteria (see American National Standard—Surface and Volume Radioactivity Standards for Clearance (ANSI/HPS N13.12–1999)), for the release of property and other items, which are more clearly based on potential risks than the surface contamination values in appendix D. However, to maintain a consistent application in the use of surface radioactivity values for both protection of workers and for protection of the public and the environment, DOE intends to continue evaluation of appendix D surface contamination values as a coordinated project that addresses both occupational and environmental aspects of this topic.

DOE–HDBK–1184–2004 recommends applying the 10 CFR part 835 subpart L provisions when the contamination levels from insoluble tritiated particles fixed to a surface exceed the removable tritium limit. DOE is soliciting comments on the need to revise the rule to reflect this recommendation.

O. What Are the Proposed Changes to the Text and Footnote in Appendix E to 10 CFR Part 835?

As discussed earlier, DOE proposes to adopt the system of dosimetry for intake of radioactive materials set forth in more recent ICRP Publications. The appendix E values would be revised using the ICRP 60 methodology and using the same exposure scenarios as were discussed in the 1998 amendment to 10 CFR part 835. In summary, the values would be based on the more limiting of the quantity of radioactive material which results in either an external or internal whole body dose, from either inhalation or ingestion, of 100 millirem. The external exposure scenario assumes a photon exposure for 12 hours a day for 365 days with the source distance being at 1 meter. The internal exposure scenario assumes an instantaneous intake of 0.001% of the material by an individual. Consistent with the other proposed changes, appendix E values have been recalculated to reflect the previously mentioned ICRP publications.

DOE also proposes to add a footnote to appendix E that any type of tritiated particulate aerosol or organically-bound tritiated compound has a value of 10 Ci. This proposed change would be made to keep appendix E consistent with the proposed change to appendix A which includes the addition of tritiated compounds. The value of 10 Ci was derived using the same method as the other proposed values in appendix E, *i.e.*, they are based on the exposure scenario discussed in the preamble to the 1998 amendment. Specifically, the inhalation exposure scenario used to derive the 10 Ci value assumes a 100 mrem dose from a Type S hafnium tritide particle (the most restrictive tritiated particulate aerosol or organically-bound tritiated compound) with a release fraction to be inhaled of 0.001%. A dose conversion value of 2.6 E-10 Sv/Bq, using the methodology from Radiological Control Programs for Special Tritium Compounds, DOE–HDBK–1184–2004, adjusted to using the ICRP 60 dosimetric quantities, was used.

In addition, the appendix E value for Californium-252, which decays by

spontaneous fission emitting neutrons, would be lower if the external exposure assumption was for neutron instead of photon exposure. Accordingly, DOE calculated the proposed appendix E value for Californium-252 by substituting a neutron exposure for the photon exposure in the external exposure scenario using values from Reference Neutron Radiations—Part 1: Characteristics and Methods of Production, ISO/CD, 8529–1.

P. For These Proposed Changes in 10 CFR Part 835, Does DOE Plan To Issue Guidance Documents?

The primary implementation guides which define DOE's expectations for the existing rule are the DOE G 441.1 series of 13 Implementation Guides for use with 10 CFR part 835. All of these guides are available through the DOE directives Web page on ''*http://www.directives.doe.gov/serieslist.html*''.

DOE plans on updating these 13 guides to reflect the amended requirements. DOE also plans to review and, as necessary, incorporate the DOE Radiological Control Technical Positions issued by the DOE Office of Worker Protection Policy and Programs into the Implementation Guides. DOE Technical Standards developed by the DOE Office of Worker Protection Policy and Programs will be updated as part of their routine five year reaffirmation process. In particular, these Technical Standards include: DOE–STD–1098–99 Radiological Control, DOE–STD–1121–98 Internal Dosimetry and the series of handbook relating to radiation protection training.

Q. Would a Contractor Need To Submit Any Documents for DOE Approval?

Section 835.101(g) requires contractors to update their Radiation Protection Program (RPP) and submit it to the DOE within 180 days of the effective date of any modifications to part 835. In accordance with 10 CFR 835.101(f), the RPP shall include plans, schedules, and other measures for achieving compliance no later than three years following the effective date of the amendment. DOE has issued guidance on submittal of RPPs in DOE G 441.1–1A, Management and Administration of Radiation Protection Programs.

V. Procedural Requirements

A. Review Under the National Environmental Policy Act

DOE has reviewed these proposed amendments to 10 CFR parts 820 and 835 under the National Environmental Policy Act (NEPA) of 1969 (42 U.S.C. 4321 *et seq.*), the Council on Environmental Quality's regulations (40 CFR parts 1500–08), and DOE's implementing regulations (10 CFR part 1021). Categorical Exclusion A5 in Appendix A to Subpart D of 10 CFR part 1021 (rulemaking that amends an existing rule without changing the environmental effect of the amended rule) applies to this rulemaking. Accordingly, DOE has not prepared an environmental impact statement or an environmental assessment pursuant to NEPA.

B. Review Under Executive Order 12866

This proposed rule has been determined not to be a ''significant regulatory action'' within the scope of section 3(f) of the Executive Order 12866, ''Regulatory Planning and Review'' (58 FR 51735, October 4, 1993. Accordingly, this proposed rule was not reviewed under the Executive Order by the Office of Information and Regulatory Affairs in the Office of Management and Budget.

C. Review Under Regulatory Flexibility Act

The Regulatory Flexibility Act, 5 U.S.C. 601 *et seq.*, requires that a Federal agency prepare a regulatory flexibility analysis for any rule for which the agency is required to publish a general notice of proposed rulemaking. The requirement to prepare an analysis does not apply, however, if the agency certifies that a rule will not have a significant economic impact on a substantial number of small entities. As required by Executive Order 13272, ''Proper Consideration of Small Entities in Agency Rulemaking,'' 67 FR 53461 (August 16, 2002), DOE published procedures and policies on February 19, 2003, to ensure that the potential impacts of its rules on small entities are properly considered during the rulemaking process (68 FR 7990). DOE has made its procedures and policies available on the Office of General Counsel's Web site: *http://www.gc.doe.gov*.

The impact of the changes to 10 CFR part 820 are primarily for DOE's administration of its enforcement program. The impact of the changes to 10 CFR part 835 are primarily with respect to large management and operating contractors. Subcontractors and suppliers are expected to satisfy the provisions of 10 CFR part 835 primarily through the programs and procedures established by prime contractors. The impacts to small entities with respect to changes to 10 CFR parts 820 and 835 are expected to be minor and the costs of compliance are reimbursable under contracts with DOE. On this basis, DOE certifies that this rule will not have a significant economic impact on a substantial number of small entities and, therefore, no analysis has been prepared.

D. Review Under the Paperwork Reduction Act of 1995

The information collection provisions of this proposed rule are not substantially different from those contained in DOE contracts with DOE prime contractors covered by this proposed rule. The information collection was previously approved by the Office of Management and Budget (OMB) and assigned OMB Control No. 1910–0300. Accordingly, no additional Office of Management and Budget clearance is required by the Paperwork Reduction Act of 1995 (44 U.S.C. 3501 *et seq.*).

E. Review Under Executive Order 13132

Executive Order 13132 (64 FR 43255, August 10, 1999), requires agencies to develop an accountable process to ensure meaningful and timely input by State and local officials in the development of regulatory policies that have ''federalism implications.'' Policies that have federalism implications are defined in the Executive Order to include regulations that have substantial direct effects on the States, on the relationship between the national government and the States, or on the distribution of power and responsibilities among the various levels of government. DOE has examined the proposed changes to 10 CFR parts 820 and 835 and determined that they do not have a substantial direct effect on the States, on the relationship between the national government and the States, or on the distribution of power and responsibilities among various levels of government. No further action is required by Executive Order 13132.

F. Review Under the Unfunded Mandates Reform Act of 1995

Title II of the Unfunded Mandates Reform Act of 1995, 2 U.S.C. 1531 *et seq.*, requires each Federal agency, to the extent permitted by law, to prepare a written assessment of the effects of any Federal mandate in an agency rule that may result in the expenditure by State, local, and tribal governments, in the aggregate or by the private sector, of $100 million or more (adjusted annually for inflation) in any one year.

This proposed rule would amend 10 CFR parts 820 and 835. The 10 CFR part 835 changes would apply only to activities conducted by or for DOE

involving individual exposure to ionizing radiation. Any costs resulting from implementation of DOE's management, operation, and enforcement of its nuclear safety program are ultimately borne by the Federal Government. Therefore, the requirements of Title II of the Unfunded Mandates Reform Act of 1995 do not apply.

G. Review Under Executive Order 12988

With respect to the review of existing regulations and the promulgation of new regulations, section 3 of Executive Order 12988, ''Civil Justice Reform,'' 61 FR 4729 (February 7, 1996), imposes on Executive agencies the general duty to eliminate drafting errors and ambiguity, write regulations to minimize litigation, provide a clear legal standard for affected conduct rather than a general standard, and promote simplification and burden reduction. Section 3(c) of Executive Order 12988 requires Executive agencies to review regulations in light of applicable standards in section 3(a) and section 3(b) to determine whether they are met. DOE has completed the required review and determined that, to the extent permitted by law, this notice of proposed rulemaking to amend 10 CFR parts 820 and 835 meets the relevant standards of Executive Order 12988.

H. Review Under the Treasury and General Government Appropriations Act, 1999

Section 654 of the Treasury and General Government Appropriations Act, 1999 (Pub. L. 105–277) requires Federal agencies to issue a Family Policymaking Assessment for any proposed rule or policy that may affect family well-being. The proposed amendments to 10 CFR parts 820 and 835 would not impact on the autonomy or integrity of the family institution. Accordingly, DOE has concluded that it is not necessary to prepare a Family Policymaking Statement.

I. Review under Executive Order 13211

Executive Order 13211, ''Actions Concerning Regulations That Significantly Affect Energy Supply, Distribution, or Use'' (66 FR 28355, May 22, 2001) requires Federal agencies to prepare and submit to the Office of Information and Regulatory Affairs in the Office of Management and Budget a Statement of Energy Effects for any significant energy action. Today's proposed rule is not a significant energy action, as that term is defined in the Executive Order. Accordingly, DOE has not prepared a Statement of Energy Effects.

J. Review Under the Treasury and General Government Appropriations Act, 2001

The Treasury and General Government Appropriation Act, 2001 (44 U.S. C. 3516, note) provides for agencies to review most dissemination of information to the public under guidelines established by each agency pursuant to general guidelines issued by OMB. OMB'S guidelines were published at 67 FR 8452 (February 22, 2002), and DOE's guidelines were published at 67 FR 62446 (October 7, 2002). DOE has reviewed today's notice under the OMB and DOE guidelines and has concluded that it is consistent with applicable policies in those guidelines.

K. Approval of the Office of the Secretary of Energy

The Office of the Secretary has approved the issuance of this notice of proposed rulemaking.

VI. Opportunity for Public Comment

A. Written Comments

Interested persons are invited to participate in this proceeding by submitting data, views, or comments on this proposed rule. Three copies of written comments should be submitted to the address indicated in the **ADDRESSES** section of this notice of proposed rulemaking. Comments should be identified on the outside of the envelope and on the comments themselves with the designated ''Docket No. EH–RM–02–835'' or ''RIN 1901–AA95.'' All comments received on or before the date specified at the beginning of this notice will be considered before final action is taken in this rulemaking. Because of recent delays in the delivery of mail to DOE, we recommend that comments also be sent by email to the address given at the beginning of this notice of proposed rulemaking.

All submitted comments will be available for public inspection as part of the administrative record for this rulemaking in the DOE Freedom of Information Reading Room at the address given in the **ADDRESSES** section of this notice of proposed rulemaking.

Pursuant to the provisions of 10 CFR 1004.11, anyone submitting information or data that he or she believes to be confidential and exempt by law from public disclosure should submit one complete copy of the document, as well as two copies, if possible, from which the information has been deleted. DOE will make its determination as to the confidentiality of the information and treat it accordingly.

B. Public Hearing

A public hearing will be held at the time, date, and location indicated in the **DATES** and **ADDRESSES** sections of this notice. DOE invites any person who has an interest in the proposed rule, or who is a representative of a group or class of persons that has an interest, to make a request for an opportunity to make an oral presentation at the hearing. Requests to speak should be sent to the mailing address or e-mail address or made by calling the telephone number given in the **DATES** section of this notice. Requests must be received by the time specified in the **DATES** section of this notice. The person making the request should provide a daytime telephone number. Each person selected to speak at a public hearing will be notified as to his or her approximate speaking time. DOE reserves the right to select persons to be heard at each hearing, to schedule their presentations, and to establish procedures governing the conduct of the hearing. The length of each presentation will be limited to 10 minutes, unless the hearing officer determines that the number of persons requesting to speak permits longer presentation times.

A departmental official will be designated to preside at the hearing. The hearing will not be a judicial or a trial-type hearing but will be conducted in accordance with 5 U.S.C. 553 and section 501 of the Department of Energy Organization Act, 42 U.S.C. 7191. Only those persons conducting the hearing may ask questions. At the conclusion of all initial oral statements, each person will be given the opportunity to make a rebuttal statement. The rebuttal statements will be given in the same order as the initial statements. Any further procedural rules needed for the proper conduct of the hearing will be announced by the Presiding Officer at the hearing.

DOE will retain the record of the full hearing, including the transcript, and make it available for inspection and copying in the DOE Freedom of Information Reading Room at the address provided in the **ADDRESSES** section of this notice. Transcripts may be purchased from the court reporter.

If DOE must cancel the hearing, every effort will be made to publish an advance notice of such cancellation in the **Federal Register**. Notice of cancellation also will be given to all persons scheduled to speak at the hearing. The hearing date may be canceled in the event no public testimony has been scheduled in advance.

List of Subjects

10 CFR Part 820

Administrative practice and procedure, Federal buildings and facilities, Government contracts, Nuclear energy, Nuclear materials, Nuclear power plants and reactors, Nuclear safety, Penalties, Public health, and Radiation protection.

10 CFR Part 835

Federal buildings and facilities, Nuclear energy, Nuclear materials, Nuclear power plants and reactors, Nuclear safety, Occupational safety and health, Radiation protection, and Reporting and recordkeeping requirements.

Issued in Washington, DC on July 6, 2006.

C. Russell H. Shearer,

Acting Assistant Secretary for Environment, Safety and Health.

For the reasons set forth in the preamble, Parts 820 and 835 of Chapter III, Title 10, of the Code of Federal Regulations are proposed to be amended as set forth below.

PART 820—PROCEDURAL RULES FOR DOE NUCLEAR ACTIVITIES

1. The authority citation for part 820 is revised to read as follows:

Authority: 42 U.S.C. 2201; 2282(a); 7191; 28 U.S.C. 2461 note; 50 U.S.C. 2410.

2. In § 820.1 paragraph (c) is revised to read as follows:

§ 820.1 Purpose and Scope.

* * * * *

(c) *Exclusion.* Activities and facilities covered under E.O. 12344, 42 U.S.C. 7158 note, pertaining to Naval nuclear propulsion are excluded from the requirements of subparts D and E of this part regarding interpretations and exemptions related to this part. The Deputy Administrator for Naval Reactors or his designee will be responsible for formulating, issuing, and maintaining appropriate records of interpretations and exemptions for these facilities and activities.

3. In § 820.2 revise the definitions for ''Director'', and ''Secretarial Officer'', and add a new definition for ''NNSA'', in alphabetical order to read as follows:

§ 820.2 Definitions.

* * * * *

Director means a DOE Official to whom the Secretary has assigned the authority to investigate the nature and extent of compliance with the requirements of this part. With regard to activities and facilities covered under E.O. 12344, 42 U.S.C. 7158 note, pertaining to Naval nuclear propulsion, the Director shall mean the Deputy Administrator for Naval Reactors or his designee.

* * * * *

NNSA means the National Nuclear Security Administration.

* * * * *

Secretarial Officer means the Assistant Secretary, NNSA Administrator, Deputy Administrator, Program Office Director, or equivalent DOE official who has primary line management responsibility for a contractor.

* * * * *

4. Section 820.13 is added to read as follows:

§ 820.13 Direction to NNSA contractors.

(a) Notwithstanding any other provision of this part, and pursuant to section 3220 of Public Law 106–65, as amended, the NNSA Administrator, rather than the Director, signs, issues and serves the following actions that direct NNSA contractors:

(1) Subpoenas;

(2) Orders to compel attendance;

(3) Disclosures of information or documents obtained during an investigation or inspection;

(4) Preliminary notices of violations; and

(5) Final notices of violations.

(b) The NNSA Administrator shall act after consideration of the Director's recommendation.

5. In § 820.21, paragraphs (g) and (h) are added to read as follows:

§ 820.21 Investigations.

* * * * *

(g) The Director may issue enforcement letters that communicate DOE's expectations with respect to any aspect of the requirements of DOE's Nuclear Safety Requirements, including identification and reporting of issues, corrective actions, and implementation of the DOE's Nuclear Safety Requirements, provided that an enforcement letter may not create the basis for any legally enforceable requirement pursuant to this part.

(h) The Director may sign, issue and serve subpoenas.

6. In Appendix A to part 820, revise sections IV and VIII to read as follows:

Appendix A to Part 820—General Statement of Enforcement Policy

* * * * *

IV. Responsibilities

(a) The Director, as the principal enforcement officer of the DOE, has been delegated the authority to:

(1) Conduct enforcement inspections, investigations, and conferences;

(2) Issue Notices of Violations and proposed civil penalties, Enforcement Letters, Consent Orders, and subpoenas; and

(3) Issue orders to compel attendance and disclosure of information or documents obtained during an investigation or inspection.

(b) The NNSA Administrator, pursuant to section 3212 of Public Law 106–65, as amended, has responsibility for environment, safety and health operations within NNSA and is authorized to sign, issue and serve the following actions that direct NNSA contractors:

(1) Subpoenas;

(2) Orders to compel attendance;

(3) Disclosure of information or documents obtained during an investigation or inspection;

(4) Preliminary Notices of Violations; and

(5) Final Notices of Violations.

The NNSA Administrator acts after consideration of the Director's recommendation.

* * * * *

VIII. Enforcement Letter

(a) In cases where DOE has decided not to conduct an investigation or inspection or issue a Preliminary Notice of Violation (PNOV), DOE may send an Enforcement Letter to the contractor, signed by the Director. Enforcement Letters issued to NNSA contractors will be coordinated with the Deputy Administrator of the NNSA with primary responsibility for environment, safety and health matters prior to issuance. The Enforcement Letter is intended to communicate the basis of the decision not to pursue enforcement action for a noncompliance. The Enforcement Letter is intended to inform contractors of the desired level of worker safety and health performance. It may be used when DOE concludes the specific noncompliance at issue is not of the level of significance warranted to conduct an investigation or inspection or for issuance of a PNOV. Even where a noncompliance may be significant, the Enforcement Letter recognizes that the contractor's actions may have attenuated the need for enforcement action. The Enforcement Letter will typically recognize how the contractor handled the circumstances surrounding the noncompliance, address additional areas requiring the contractor's attention, and address DOE's expectations for corrective action.

(b) In general, Enforcement Letters communicate DOE's expectations with respect to any aspect of the requirements of this part, including identification and reporting of issues, corrective actions, and implementation of the contractor's safety and health program. DOE might, for example, wish to recognize some action of the contractor that is of particular benefit to worker safety and health that is a candidate for emulation by other contractors. On the other hand, DOE may wish to bring a program shortcoming to the attention of the contractor that, but for the lack of worker safety and health significance of the immediate issue, might have resulted in the issuance of a PNOV. An Enforcement Letter is not an enforcement action.

(c) With respect to many noncompliances, DOE may decide not to send an Enforcement Letter. When DOE decides that a contractor has appropriately corrected a noncompliance or that the significance of the noncompliance is sufficiently low, it may close out its review simply through an annotation in the DOE Noncompliance Tracking System (NTS). A closeout of a noncompliance with or without an Enforcement Letter may only take place after DOE has confirmed that corrective actions have been completed. Closeout of any NNSA contractor noncompliance will be coordinated with NNSA prior to closeout.

* * * * *

PART 835—OCCUPATIONAL RADIATION PROTECTION

7. The authority citation for part 835 is revised to read as follows:

Authority: 42 U.S.C. 2201; 7191; 50 U.S.C. 2410.

8. Section 835.1 is amended:

a. In the introductory text of paragraph (b), remove the word ''discussed'' and add in its place ''provided''.

b. Paragraph (b)(2) is revised.

c. Paragraph (b)(4) is removed.

d. Paragraph (b)(5) is redesignated as (b)(4) and the word ''or'' at the end of the paragraph is removed.

e. Paragraph (b)(6) is redesignated as (b)(5) and the period at the end of the paragraph is removed and ''; or'' is added in its place.

f. A new paragraph (b)(6) is added.

g. Paragraph (c) is revised.

h. A new paragraph (d) is added.

The revisions and additions specified above read as follows:

§ 835.1 Scope.

* * * * *

(b) * * *

(2) Activities conducted under the authority of the Deputy Administrator for Naval Reactors, as described in Public Law 98–525 and 106–65;

* * * * *

(6) Radioactive material on or within material, equipment and real property which is approved for release when the radiological conditions of the material, equipment and real property have been documented to comply with the criteria for release set forth in a DOE authorized limit which has been approved by a Secretarial Officer in consultation with the Office of the Assistant Secretary for Environment, Safety and Health.

(c) Occupational doses received as a result of excluded activities listed in paragraphs (b)(1) through (b)(4) and (b)(6) of this section, shall be included to the extent practicable when determining compliance with the occupational dose limits at §§ 835.202 and 835.207, and with the limits for the embryo/fetus at § 835.206. Occupational doses resulting from authorized emergency exposures and planned special exposures shall not be considered when determining compliance with the dose limits at §§ 835.202 and 835.207.

(d) The requirements in subparts F and G of this part do not apply to radioactive material transportation, provided the radioactive material is under the continuous observation and control of an individual who is knowledgeable of and implements required exposure control measures.

9. Section 835.2 is revised to read as follows:

§ 835.2 Definitions.

(a) As used in this part:

Accountable sealed radioactive source means a sealed radioactive source having a half-life equal to or greater than 30 days and an isotopic activity equal to or greater than the corresponding value provided in appendix E of this part.

Airborne radioactive material or airborne radioactivity means radioactive material dispersed in the air in the form of dusts, fumes, particulates, mists, vapors, or gases.

Airborne radioactivity area means any area, accessible to individuals, where:

(1) The concentration of airborne radioactivity, above natural background, exceeds or is likely to exceed the derived air concentration (DAC) values listed in appendix A or appendix C of this part; or

(2) An individual present in the area without respiratory protection could receive an intake exceeding 12 DAC-hours in a week.

ALARA means ''As Low As is Reasonably Achievable,'' which is the approach to radiation protection to manage and control exposures (both individual and collective) to the work force and to the general public to as low as is reasonable, taking into account social, technical, economic, practical, and public policy considerations. As used in this part, ALARA is not a dose limit but a process which has the objective of attaining doses as far below the applicable limits of this part as is reasonably achievable.

Annual limit on intake (ALI) means the derived limit for the amount of radioactive material taken into the body of an adult worker by inhalation or ingestion in a year. ALI is the smaller value of intake of a given radionuclide in a year by the reference man (ICRP Publication 23) that would result in a committed effective dose of 5 rems (0.05 sievert) or a committed equivalent dose of 50 rems (0.5 sievert) to any individual organ or tissue. ALI values for intake by ingestion and inhalation of selected radionuclides are based on International Commission on Radiological Protection Publication 68, *Dose Coefficients for Intakes of Radionuclides by Workers*, published July, 1994 (ISBN 0 08 042651 4). This document is available from Elsevier Science Inc., Tarrytown, NY.

Authorized limit means a limit on the concentration of residual radioactive material on the surfaces or within the property that has been derived consistent with DOE directives including the as low as is reasonably achievable (ALARA) process requirements, given the anticipated use of the property and has been authorized by DOE to permit the release of the property from DOE radiological control.

Background means radiation from:

(1) Naturally occurring radioactive materials which have not been technologically enhanced;

(2) Cosmic sources;

(3) Global fallout as it exists in the environment (such as from the testing of nuclear explosive devices);

(4) Radon and its progeny in concentrations or levels existing in buildings or the environment which have not been elevated as a result of current or prior activities; and

(5) Consumer products containing nominal amounts of radioactive material or producing nominal amounts of radiation.

Bioassay means the determination of kinds, quantities, or concentrations, and, in some cases, locations of radioactive material in the human body, whether by direct measurement or by analysis and evaluation of radioactive materials excreted or removed from the human body.

Calibration means to adjust and/or determine either:

(1) The response or reading of an instrument relative to a standard (*e.g.*, primary, secondary, or tertiary) or to a series of conventionally true values; or

(2) The strength of a radiation source relative to a standard (*e.g.*, primary, secondary, or tertiary) or conventionally true value.

Contamination area means any area, accessible to individuals, where removable surface contamination levels exceed or are likely to exceed the removable surface contamination values specified in appendix D of this part, but do not exceed 100 times those values.

Controlled area means any area to which access is managed by or for DOE to protect individuals from exposure to radiation and/or radioactive material.

Declared pregnant worker means a woman who has voluntarily declared to her employer, in writing, her pregnancy

for the purpose of being subject to the occupational dose limits to the embryo/fetus as provided in § 835.206. This declaration may be revoked, in writing, at any time by the declared pregnant worker.

Derived air concentration (DAC) means, for the radionuclides listed in appendix A of this part, the airborne concentration that equals the ALI divided by the volume of air breathed by an average worker for a working year of 2000 hours (assuming a breathing volume of 2400 m^3). For the radionuclides listed in appendix C of this part, the air immersion DACs were calculated for a continuous, non-shielded exposure via immersion in a semi-infinite cloud of radioactive material. The values are based upon International Commission on Radiological Protection Publication 68, *Dose Coefficients for Intakes of Radionuclides by Workers*, published July, 1994 (ISBN 0 08 042651 4). This document is available from Elsevier Science Inc., Tarrytown, NY.

Derived air concentration-hour (DAC-hour) means the product of the concentration of radioactive material in air (expressed as a fraction or multiple of the DAC for each radionuclide) and the time of exposure to that radionuclide, in hours.

DOE activity means an activity taken for or by DOE in a DOE operation or facility that has the potential to result in the occupational exposure of an individual to radiation or radioactive material. The activity may be, but is not limited to, design, construction, operation, or decommissioning. To the extent appropriate, the activity may involve a single DOE facility or operation or a combination of facilities and operations, possibly including an entire site or multiple DOE sites.

Entrance or access point means any location through which an individual could gain access to areas controlled for the purpose of radiation protection. This includes entry or exit portals of sufficient size to permit human entry, irrespective of their intended use.

General employee means an individual who is either a DOE or DOE contractor employee; an employee of a subcontractor to a DOE contractor; or an individual who performs work for or in conjunction with DOE or utilizes DOE facilities.

High contamination area means any area, accessible to individuals, where removable surface contamination levels exceed or are likely to exceed 100 times the removable surface contamination values specified in appendix D of this part.

High radiation area means any area, accessible to individuals, in which radiation levels could result in an individual receiving a deep equivalent dose in excess of 0.1 rem (0.001 sievert) in 1 hour at 30 centimeters from the radiation source or from any surface that the radiation penetrates.

Individual means any human being.

Member of the public means an individual who is not a general employee. An individual is not a ''member of the public'' during any period in which the individual receives an occupational dose.

Minor means an individual less than 18 years of age.

Monitoring means the measurement of radiation levels, airborne radioactivity concentrations, radioactive contamination levels, quantities of radioactive material, or individual doses and the use of the results of these measurements to evaluate radiological hazards or potential and actual doses resulting from exposures to ionizing radiation.

Nonstochastic effects means effects due to radiation exposure for which the severity varies with the dose and for which a threshold normally exists (*e.g.*, radiation-induced opacities within the lens of the eye).

Occupational dose means an individual's ionizing radiation dose (external and internal) as a result of that individual's work assignment. Occupational dose does not include doses received as a medical patient or doses resulting from background radiation or participation as a subject in medical research programs.

Person means any individual, corporation, partnership, firm, association, trust, estate, public or private institution, group, Government agency, any State or political subdivision of, or any political entity within a State, any foreign government or nation or other entity, and any legal successor, representative, agent or agency of the foregoing; provided that person does not include the Department or the United States Nuclear Regulatory Commission.

Radiation means ionizing radiation: alpha particles, beta particles, gamma rays, X-rays, neutrons, high-speed electrons, high-speed protons, and other particles capable of producing ions. Radiation, as used in this part, does not include non-ionizing radiation, such as radio- or micro-waves, or visible, infrared, or ultraviolet light.

Radiation area means any area, accessible to individuals, in which radiation levels could result in an individual receiving a deep equivalent dose in excess of 0.005 rem (0.05 millisievert) in 1 hour at 30 centimeters from the source or from any surface that the radiation penetrates.

Radioactive material area means any area within a controlled area, accessible to individuals, in which items or containers of radioactive material exist and the total activity of radioactive material exceeds the applicable values provided in appendix E of this part.

Radioactive material transportation means the movement of radioactive material by aircraft, rail, vessel, or highway vehicle. Radioactive material transportation does not include preparation of material or packagings for transportation, storage of material awaiting transportation, or application of markings and labels required for transportation.

Radiological area means any area within a controlled area defined in this section as a ''radiation area,'' ''high radiation area,'' ''very high radiation area,'' ''contamination area,'' ''high contamination area,'' or ''airborne radioactivity area.''

Radiological worker means a general employee whose job assignment involves operation of radiation producing devices or working with radioactive materials, or who is likely to be routinely occupationally exposed above 0.1 rem (0.001 sievert) per year total effective dose.

Real property means land and anything permanently affixed to the land such as buildings, fences and those things attached to the buildings, such as light fixtures, plumbing and heating fixtures, or other such items that would be personal property if not attached.

Real-time air monitoring means measurement of the concentrations or quantities of airborne radioactive materials on a continuous basis.

Respiratory protective device means an apparatus, such as a respirator, worn by an individual for the purpose of reducing the individual's intake of airborne radioactive materials.

Sealed radioactive source means a radioactive source manufactured, obtained, or retained for the purpose of utilizing the emitted radiation. The sealed radioactive source consists of a known or estimated quantity of radioactive material contained within a sealed capsule, sealed between layer(s) of non-radioactive material, or firmly fixed to a non-radioactive surface by electroplating or other means intended to prevent leakage or escape of the radioactive material. Sealed radioactive sources do not include reactor fuel elements, nuclear explosive devices, and radioisotope thermoelectric generators.

Source leak test means a test to determine if a sealed radioactive source is leaking radioactive material.

Stochastic effects means malignant and hereditary diseases for which the probability of an effect occurring, rather than its severity, is regarded as a function of dose without a threshold, for radiation protection purposes.

Very high radiation area means any area, accessible to individuals, in which radiation levels could result in an individual receiving an absorbed dose in excess of 500 rads (5 grays) in one hour at 1 meter from a radiation source or from any surface that the radiation penetrates.

Week means a period of seven consecutive days.

Year means the period of time beginning on or near January 1 and ending on or near December 31 of that same year used to determine compliance with the provisions of this part. The starting and ending date of the year used to determine compliance may be changed provided that the change is made at the beginning of the year and that no day is omitted or duplicated in consecutive years.

(b) As used in this part to describe various aspects of radiation dose:

Absorbed dose (D) means the average energy absorbed by matter from ionizing radiation per unit mass of irradiated material. The absorbed dose is expressed in units of rad (or gray) (1 rad = 0.01 gray).

Committed effective dose (E_{50}) means the sum of the committed equivalent doses to various tissues or organs in the body ($H_{T,50}$), each multiplied by the appropriate weighting factor (w_T)—that is, $\sigma_{50} = \Sigma w_T H_{T,50}$. Committed effective dose is expressed in units of rem (or sievert).

Committed equivalent dose ($H_{T,50}$) means the equivalent dose calculated to be received by a tissue or organ over a 50-year period after the intake of a radionuclide into the body. It does not include contributions from radiation sources external to the body. Committed equivalent dose is expressed in units of rem (or sievert) (1 rem = 0.01 sievert).

Cumulative total effective dose means the sum of all total effective dose values recorded for an individual plus, for occupational exposures received before the implementation date of this amendment, the sum of all total effective dose equivalent (as defined in the November 4, 1998 amendment to this rule) values recorded for an individual, where available, for each year occupational dose was received, beginning January 1, 1989.

Deep equivalent dose means the equivalent dose derived from external radiation at a depth of 1 cm in tissue.

Dose is a general term for absorbed dose, equivalent dose, effective dose, committed equivalent dose, committed effective dose, or total effective dose as defined in this part.

Effective dose (E) means the summation of the products of the equivalent dose received by specified tissues or organs of the body (H_T) and the appropriate tissue weighting factor (w_T)—that is, $E = \Sigma w_T H_T$. It includes the dose from radiation sources internal and/or external to the body. For purposes of compliance with this part, deep equivalent dose to the whole body may be used as effective dose for external exposures. The effective dose is expressed in units of rem (or sievert).

Equivalent dose (H_T) means the product of average absorbed dose ($D_{T,R}$) in rad (or gray) in a tissue or organ and a radiation weighting factor (w_R). Equivalent dose is expressed in units of rem (or sievert) (1 rem = 0.01 sievert).

External dose or exposure means that portion of the equivalent dose received from radiation sources outside the body (i.e., ''external sources'').

Extremity means hands and arms below the elbow or feet and legs below the knee.

Internal dose or exposure means that portion of the equivalent dose received from radioactive material taken into the body (i.e., ''internal sources'').

Lens of the eye equivalent dose means the external exposure of the lens of the eye and is taken as the equivalent dose at a tissue depth of 0.3 cm.

Radiation weighting factor (w_R) means the modifying factor used to calculate the equivalent dose from the average tissue or organ absorbed dose; the absorbed dose (expressed in rad or gray) is multiplied by the appropriate radiation weighting factor. The radiation weighting factors to be used for determining equivalent dose in rem are as follows:

RADIATION WEIGHTING FACTORS [1], w_R

Type and energy range	Radiation weighting factor
Photons, electrons and muons, all energies [2]	1
Neutrons, energy < 10 keV [3]	5
Neutrons, energy 10 keV to 100 keV [3]	10
Neutrons, energy > 100 keV to 2 MeV [3]	20
Neutrons, energy > 2 MeV to 20 MeV [3]	10
Neutrons, energy > 20 MeV [3]	5
Protons, other than recoil protons, energy > 2 MeV	5

RADIATION WEIGHTING FACTORS [1], w_R—Continued

Type and energy range	Radiation weighting factor
Alpha particles, fission fragments, heavy nuclei	20

[1] All values relate to the radiation incident on the body or, for internal sources, emitted from the source.

[2] Excluding Auger electrons emitted from nuclei bound to DNA.

[3] When spectral data are insufficient to identify the energy of the neutrons, a radiation weighting factor of 20 shall be used.

Shallow equivalent dose means the equivalent dose deriving from external radiation at a depth of 0.007 cm in tissue.

Tissue weighting factor (w_T) means the fraction of the overall health risk, resulting from uniform, whole body irradiation, attributable to specific tissue (T). The equivalent dose to tissue, (HT), is multiplied by the appropriate tissue weighting factor to obtain the effective dose (E) contribution from that tissue. The tissue weighting factors are as follows:

TISSUE WEIGHTING FACTORS FOR VARIOUS ORGANS AND TISSUES

Organs or tissues, T	Tissue weighting factor, w_T
Gonads	0.20
Red bone marrow	0.12
Colon	0.12
Lungs	0.12
Stomach	0.12
Bladder	0.05
Breast	0.05
Liver	0.05
Esophagus	0.05
Thyroid	0.05
Skin	0.01
Bone surfaces	0.01
Remainder [1]	0.05
Whole body [2]	1.00

[1] ''Remainder'' means the following additional tissues and organs: adrenal glands, brain, extrathoracic airways, upper large intestine, small intestine, kidney, muscle, pancreas, spleen, thymus, and uterus. In those cases in which a single one of the remainder tissues or organs receives an equivalent dose in excess of the highest dose in any of the twelve organs or tissues for which a tissue weighting factor is specified, a tissue weighting factor of 0.025 shall be applied to that tissue or organ and a tissue weighting factor of 0.025 to the average dose in the rest of the remainder.

[2] For the case of uniform external irradiation of the whole body, a tissue weighting factor (w_T) equal to 1 may be used in determination of the effective dose.

Total effective dose (TED) means the sum of the effective dose (for external exposures) and the committed effective dose (for internal exposures).

Whole body means, for the purposes of external exposure, head, trunk (including male gonads), arms above and including the elbow, or legs above and including the knee.

(c) Terms defined in the Atomic Energy Act or in 10 CFR part 820 and not defined in this part are used consistent with the meanings given in the Act or in 10 CFR part 820.

10. Section 835.4 is revised to read as follows:

§ 835.4 Radiological units.

Unless otherwise specified, the quantities used in the records required by this part shall be clearly indicated in special units of curie, rad, roentgen, or rem, including multiples and subdivisions of these units, or other conventional units, such as, dpm, dpm/100 cm^2 or mass units. The SI units, becquerel (Bq), gray (Gy), and sievert (Sv), may be provided parenthetically in this part for reference with scientific standards.

11. Section 835.101 is amended by revising paragraph (f) to read as follows:

§ 835.101 Radiation protection programs.

* * * * *

(f) The RPP shall include plans, schedules, and other measures for achieving compliance with regulations of this part. Unless otherwise specified in this part, compliance with the amendments to this part published on [DATE OF PUBLICATION IN THE FR] shall be achieved no later than [DATE 3 YEARS FOLLOWING THE EFFECTIVE DATE OF THE FINAL RULE].

* * * * *

12. Section 835.202 is amended by revising paragraphs (a)(1) through (a)(4) to read as follows:

§ 835.202 Occupational dose limits for general employees.

(a) * * *

(1) A total effective dose of 5 rems (0.05 sievert);

(2) The sum of the deep equivalent dose for external exposures and the committed equivalent dose to any organ or tissue other than the skin or the lens of the eye of 50 rems (0.5 sievert);

(3) A lens of the eye equivalent dose of 15 rems (0.15 sievert); and

(4) The sum of the shallow equivalent dose for external exposures and the committed equivalent dose to the skin or to any extremity of 50 rems (0.5 sievert).

* * * * *

13. Section 835.203 is revised to read as follows:

§ 835.203 Combining internal and external equivalent doses.

(a) The total effective dose during a year shall be determined by summing the effective dose from external exposures and the committed effective dose from intakes during the year.

(b) Determinations of the effective dose shall be made using the tissue weighting factor values provided in § 835.2.

14. In § 835.205 paragraphs (b)(1), (b)(2), (b)(3) introductory text, and (b)(3)(ii) are revised to read as follows:

§ 835.205 Determination of compliance for non-uniform exposure of the skin.

* * * * *

(b) * * *

(1) *Area of skin irradiated is 100 cm^2 or more.* The non-uniform equivalent dose received during the year shall be averaged over the 100 cm^2 of the skin receiving the maximum dose, added to any uniform equivalent dose also received by the skin, and recorded as the shallow equivalent dose to any extremity or skin for the year.

(2) *Area of skin irradiated is 10 cm^2 or more, but is less than 100 cm^2.* The non-uniform equivalent dose (H) to the irradiated area received during the year shall be added to any uniform equivalent dose also received by the skin and recorded as the shallow equivalent dose to any extremity or skin for the year. H is the equivalent dose averaged over the 1 cm^2 of skin receiving the maximum absorbed dose, D, reduced by the fraction f, which is the irradiated area in cm^2 divided by 100 cm^2 (i.e., H = fD). In no case shall a value of f less than 0.1 be used.

(3) *Area of skin irradiated is less than 10 cm^2.* The non-uniform equivalent dose shall be averaged over the 1 cm^2 of skin receiving the maximum dose. This equivalent dose shall:

* * * * *

(ii) Not be added to any other shallow equivalent dose to any extremity or skin recorded as the equivalent dose for the year.

15. In § 835.206, paragraphs (a) and (c) are revised to read as follows:

§ 835.206 Limits for the embryo/fetus.

(a) The equivalent dose limit for the embryo/fetus from the period of conception to birth, as a result of occupational exposure of a declared pregnant worker, is 0.5 rem (0.005 sievert).

* * * * *

(c) If the equivalent dose to the embryo/fetus is determined to have already exceeded 0.5 rem (0.005 sievert) by the time a worker declares her pregnancy, the declared pregnant worker shall not be assigned to tasks where additional occupational exposure is likely during the remaining gestation period.

16. Section 835.207 is revised to read as follows:

§ 835.207 Occupational dose limits for minors.

The equivalent dose limits for minors occupationally exposed to radiation and/or radioactive materials at a DOE activity are 0.1 rem (0.001 sievert) total effective dose in a year and 10% of the occupational dose limits specified at § 835.202(a)(3) and (a)(4).

17. Section 835.208 is revised to read as follows:

§ 835.208 Limits for members of the public entering a controlled area.

The total effective dose limit for members of the public exposed to radiation and/or radioactive material during access to a controlled area is 0.1 rem (0.001 sievert) in a year.

18. In § 835.401, paragraph (a)(5) is revised to read as follows:

§ 835.401 General requirements.

(a) * * *

(5) Verify the effectiveness of engineering and administrative controls in containing radioactive material and reducing radiation exposure; and

* * * * *

19. Section 835.402 is amended:

a. Paragraphs (a)(1)(i), (ii), and (iii) are revised.

b. Paragraph (a)(2) is revised.

c. Paragraphs (c)(1) and (c)(2) are revised.

The revisions read as follows:

§ 835.402 Individual monitoring.

(a) * * *

(1) * * *

(i) An effective dose of 0.1 rem (0.001 sievert) or more in a year;

(ii) A shallow equivalent dose to the skin or to any extremity of 5 rems (0.05 sievert) or more in a year;

(iii) A lens of the eye equivalent dose of 1.5 rems (0.015 sievert) or more in a year;

(2) Declared pregnant workers who are likely to receive from external sources an equivalent dose to the embryo/fetus in excess of 10 percent of the applicable limit at § 835.206(a);

* * * * *

(c) * * *

(1) Radiological workers who, under typical conditions, are likely to receive a committed effective dose of 0.1 rem (0.001 sievert) or more from all occupational radionuclide intakes in a year;

(2) Declared pregnant workers likely to receive an intake or intakes resulting

in a equivalent dose to the embryo/fetus in excess of 10 percent of the limit stated at § 835.206(a);

* * * * *

§ 835.405 [Amended]

20. Section 835.405 is amended in paragraph (c)(2) by removing ''unless the package contains less than a Type A'' and adding in its place ''if the package contains a Type B''.

§ 835.502 [Amended]

21. Section 835.502 is amended in paragraph (a)(2) and paragraph (b) introductory text by removing the word ''dose'' before ''equivalent'' and adding it after ''equivalent''.

§ 835.602 [Amended]

22. Section 835.602 is amended in paragraph (a) by removing the word ''equivalent''.

§ 835.606 [Amended]

23. Section 835.606 is amended in paragraph (a)(2) by adding ''and less than 0.1 Ci'' after the word ''part'' and before the punctuation.

24. Section 835.702 is amended:

a. Paragraph (a) is revised.

b. Paragraph (b) is revised.

c. Paragraphs (c)(3)(i), (ii), (iii) and (iv) are revised.

d. Paragraphs (c)(4)(i) and (ii) are revised.

e. Paragraph (c)(5)(i), (ii) and (iii) are revised.

f. Paragraph (c)(6) is revised.

The revisions read as follows:

§ 835.702 Individual monitoring records.

(a) Except as authorized by § 835.702(b), records shall be maintained to document doses received by all individuals for whom monitoring was conducted and to document doses received during planned special exposures, unplanned doses exceeding the monitoring thresholds of § 835.402, and authorized emergency exposures.

(b) Recording of the non-uniform shallow equivalent dose to the skin is not required if the dose is less than 2 percent of the limit specified for the skin at § 835.202(a)(4). Any internal dose estimated to be less than 10 millirem committed equivalent dose need not be recorded, if the bioassay and/or air monitoring results used to make the estimate are maintained in accordance with § 835.703(b) and the unrecorded internal dose estimated for any individual in a year does not exceed 50 percent of the applicable monitoring threshold at § 835.402(c).

(c) * * *

(3) * * *

(i) The effective dose from external sources of radiation (deep equivalent dose may be used as effective dose for external exposure);

(ii) The lens of the eye equivalent dose;

(iii) The shallow equivalent dose to the skin; and

(iv) The shallow equivalent dose to the extremities.

(4) * * *

(i) Committed effective dose;

(ii) Committed equivalent dose to any organ or tissue of concern; and

(iii) * * *

(5) * * *

(i) Total effective dose in a year;

(ii) For any organ or tissue assigned an internal dose during the year, the sum of the deep equivalent dose from external exposures and the committed equivalent dose to that organ or tissue; and

(iii) Cumulative total effective dose.

(6) Include the equivalent dose to the embryo/fetus of a declared pregnant worker.

* * * * *

25. Section 835.901 is amended by revising paragraph (b) introductory text:

§ 835.901 Radiation safety training.

* * * * *

(b) Each individual shall demonstrate knowledge of the radiation safety training topics established in § 835.901(c), commensurate with the hazards in the area and required controls, by successful completion of applied training, an examination and performance demonstrations:

* * * * *

§ 835.1001 [Amended]

26. Section 835.1001 is amended:

a. In paragraph (a), first sentence, remove ''physical design features and administrative control'' and add in its place ''engineering and administrative controls.''

b. In paragraph (b), remove ''physical design features is'' and add in its place ''engineering controls are''.

§ 835.1003 [Amended]

27. Section 835.1003 is amended in the introductory text by removing ''physical design features and administrative controls'' and add in its place ''engineering and administrative controls''.

§ 835.1301 [Amended]

28. In § 835.1301, paragraph (d) is amended by removing ''after a dose was received'' and adding in its place ''which have been suspended as a result of a dose''.

29. Appendix A to part 835 is revised to read as follows:

Appendix A to Part 835—Derived Air Concentrations (DAC) for Controlling Radiation Exposure to Workers at DOE Facilities

The data presented in this appendix A are to be used for controlling individual internal doses in accordance with § 835.209, identifying the need for air monitoring in accordance with § 835.403, and identifying and posting airborne radioactivity areas in accordance with § 835.603(d).

The DAC values are given for individual radionuclides. For known mixtures of radionuclides, determine the sum of the ratio of the observed concentration of a particular radionuclide and its corresponding DAC for all radionuclides in the mixture. If this sum exceeds unity (1), then the DAC has been exceeded. For unknown radionuclides, the most restrictive DAC (lowest value) for those isotopes not known to be absent shall be used.

The derived air concentrations (DAC) for limiting radiation exposures through inhalation of radionuclides by workers are listed in this appendix. The values are based on either a stochastic (committed effective dose) dose limit of 5 rems (0.05 Sv) or a nonstochastic (organ) dose limit of 50 rems (0.5 Sv) per year, whichever is more limiting.

Note: the 15 rems (0.15 Sv) dose limit for the lens of the eye does not appear as a critical organ dose limit.

The columns in this appendix contain the following information: (1) Radionuclide; (2) inhaled air DAC for type F (fast), type M (moderate), and type S (slow) materials in units of μCi/ml; (3) inhaled air DAC for type F (fast), type M (moderate), and type S (slow) materials in units of Bq/m^3; (4) an indication of whether or not the DAC for each class is controlled by the stochastic (effective dose) or nonstochastic (tissue) dose. The material types (F, M, and S) have been established to describe the absorption rate of the materials from the respiratory tract into the blood. The range of half-times for the absorption rates correspond to: Type F, 100% at 10 minute; Type M, 10% at 10 minute and 90% at 140 day; and Type S 0.1% at 10 minute and 99.9% at 7000 day. The DACs are listed by radionuclide, in order of increasing atomic mass, and are based on the assumption that the particle size distribution of 5 μm is used. For situations where the particle size distribution is known to differ significantly from 5 μm, appropriate corrections may be made to both the estimated dose to workers and the DACs.

Radionuclide	Material type [3]			Material type [3]			Stochastic or organ [1]
	μCi/ml			Bq/m [3]			
	F	M	S	F	M	S	(F/M/S)
H-3 (Water) [2]	2.E−05	2.E−05	2.E−05	7.E+05	7.E+05	7.E+05	St/St/St
H-3 (Elemental) [2]	2.E−01	2.E−01	2.E−01	9.E+09	9.E+09	9.E+09	St/St/St
Tritiated Particulate Aerosol and Organically Bound H-3 (Insoluble) [4].	1.E−05	6.E−06	2.E−06	3.E+05	2.E+05	8.E+04	St/St/St
Organically Bound H-3 (Soluble)	1.E−05	1.E−05	1.E−05	5.E+05	5.E+05	5.E+05	St/St/St
Be-7	–	1.E−05	1.E−05	–	4.E+05	4.E+05	/St/St
Be-10	–	8.E−08	2.E−08	–	3.E+03	1.E+03	/St/St
C-11 (Vapor) [2]	–	1.E−04	–	–	6.E+06	–	/St/
C-11 (CO) [2]	4.E−04	4.E−04	4.E−04	1.E+07	1.E+07	1.E+07	St/St/St
C-11 (CO_2) [2]	2.E−04	2.E−04	2.E−04	9.E+06	9.E+06	9.E+06	St/St/St
C-14 (Vapor) [2]	–	9.E−07	–	–	3.E+04	–	/St/
C-14 (CO) [2]	7.E−04	7.E−04	7.E−04	2.E+07	2.E+07	2.E+07	St/St/St
C-14 (CO_2) [2]	8.E−05	8.E−05	8.E−05	3.E+06	3.E+06	3.E+06	St/St/St
F-18	4.E−06	3.E−06	3.E−06	1.E+05	1.E+05	1.E+05	ET/ET/ET
Na-22	2.E−07	–	–	1.E+04	–	–	E/ /
Na-24	4.E−07	–	–	1.E+04	–	–	ET/ /
Mg-28	3.E−07	3.E−07	–	1.E+04	1.E+04	–	ET/St/
Al-26	4.E−08	4.E−08	–	1.E+03	1.E+03	–	St/St/
Si-31	9.E−06	5.E−06	5.E−06	3.E+05	1.E+05	1.E+05	ET/St/St
Si-32	1.E−07	5.E−08	1.E−08	5.E+03	2.E+03	3.E+02	St/St/St
P-32	5.E−07	1.E−07	–	1.E+04	7.E+03	–	St/St/
P-33	4.E−06	4.E−07	–	1.E+05	1.E+04	–	St/St/
S-35 (Vapor)	–	4.E−06	–	–	1.E+05	–	/St/
S-35	7.E−06	5.E−07	–	2.E+05	1.E+04	–	St/St/
Cl-36	1.E−06	1.E−07	–	4.E+04	4.E+03	–	St/St/
Cl-38	7.E−06	5.E−06	–	2.E+05	2.E+05	–	ET/ET/
Cl-39	2.E−06	4.E−06	–	1.E+05	1.E+05	–	ET/ET/
K-40	1.E−07	–	–	6.E+03	–	–	St/ /
K-42	2.E−06	–	–	1.E+05	–	–	E/ /
K-43	9.E−07	–	–	3.E+04	–	–	ET/ /
K-44	8.E−06	–	–	2.E+05	–	–	ET/ /
K-45	9.E−06	–	–	3.E+05	–	–	ET/ /
Ca-41	–	2.E−06	–	–	8.E+04	–	/BS/
Ca-45	–	2.E−07	–	–	9.E+03	–	/St/
Ca-47	–	2.E−07	–	–	9.E+03	–	/St/
Sc-43	–	–	2.E−06	–	–	7.E+04	/ /ET
Sc-44m	–	–	2.E−07	–	–	1.E+04	/ /St
Sc-44	–	–	1.E−06	–	–	4.E+04	/ /ET
Sc-46	–	–	1.E−07	–	–	4.E+03	/ /St
Sc-47	–	–	7.E−07	–	–	2.E+04	/ /St
Sc-48	–	–	2.E−07	–	–	1.E+04	/ /ET
Sc-49	–	–	8.E−06	–	–	3.E+05	/ /ET
Ti-44	7.E−09	2.E−08	9.E−09	2.E+02	7.E+02	3.E+02	St/St/St
Ti-45	3.E−06	2.E−06	2.E−06	1.E+05	1.E+05	1.E+05	ET/ET/ET
V-47	8.E−06	6.E−06	–	3.E+05	2.E+05	–	ET/ET/
V-48	2.E−07	2.E−07	–	9.E+03	7.E+03	–	ET/St/
V-49	1.E−05	2.E−05	–	7.E+05	9.E+05	–	BS/St/
Cr-48	2.E−06	2.E−06	2.E−06	8.E+04	8.E+04	8.E+04	ET/ET/ET
Cr-49	7.E−06	5.E−06	5.E−06	2.E+05	2.E+05	2.E+05	ET/ET/ET
Cr-51	1.E−05	1.E−05	1.E−05	6.E+05	6.E+05	5.E+05	St/St/St
Mn-51	7.E−06	5.E−06	–	2.E+05	2.E+05	–	ET/ET/
Mn-52m	7.E−06	5.E−06	–	2.E+05	2.E+05	–	ET/ET/
Mn-52	2.E−07	2.E−07	–	8.E+03	8.E+03	–	ET/ET/
Mn-53	5.E−06	1.E−05	–	2.E+05	5.E+05	–	BS/St/
Mn-54	5.E−07	4.E−07	–	1.E+04	1.E+04	–	St/St/
Mn-56	2.E−06	2.E−06	–	9.E+04	8.E+04	–	ET/ET/
Fe-52	6.E−07	5.E−07	–	2.E+04	2.E+04	–	ET/E/
Fe-55	6.E−07	1.E−06	–	2.E+04	6.E+04	–	St/St/
Fe-59	1.E−07	1.E−07	–	6.E+03	6.E+03	–	St/St/
Fe-60	1.E−09	4.E−09	–	6.E+01	1.E+02	–	St/St/
Co-55	–	5.E−07	5.E−07	–	2.E+04	2.E+04	/ET/ET
Co-56	–	1.E−07	1.E−07	–	5.E+03	4.E+03	/St/St
Co-57	–	1.E−06	9.E−07	–	5.E+04	3.E+04	/St/St
Co-58m	–	3.E−05	3.E−05	–	1.E+06	1.E+06	/St/St
Co-58	–	4.E−07	3.E−07	–	1.E+04	1.E+04	/St/St
Co-60m	–	4.E−04	4.E−04	–	1.E+07	1.E+07	/St/St
Co-60	–	7.E−08	3.E−08	–	2.E+03	1.E+03	/St/St
Co-61	–	6.E−06	6.E−06	–	2.E+05	2.E+05	/ET/ET
Co-62m	–	7.E−06	6.E−06	–	2.E+05	2.E+05	/ET/ET
Ni-56 (Inorg)	4.E−07	4.E−07	–	1.E+04	1.E+04	–	ET/ET/

Radionuclide	Material type [3]			Material type [3]			Stochastic or organ [1]
	μCi/ml			Bq/m [3]			
	F	M	S	F	M	S	(F/M/S)
Ni-56 (Carbonyl)	–	4.E−07	–	–	1.E+04	–	/St/
Ni-57 (Inorg)	5.E−07	5.E−07	–	2.E+04	2.E+04	–	ET/ET/
Ni-57 (Carbonyl)	–	7.E−07	–	–	2.E+04	–	/ET/
Ni-59 (Inorg)	2.E−06	5.E−06	–	9.E+04	2.E+05	–	St/St/
Ni-59 (Carbonyl)	–	6.E−07	–	–	2.E+04	–	/St/
Ni-63 (Inorg)	1.E−06	1.E−06	–	4.E+04	6.E+04	–	St/St/
Ni-63 (Carbonyl)	–	2.E−07	–	–	1.E+04	–	/St/
Ni-65 (Inorg)	5.E−06	4.E−06	–	1.E+05	1.E+05	–	ET/ET/
Ni-65 (Carbonyl)	–	8.E−07	–	–	3.E+04	–	/ET/
Ni-66 (Inorg)	7.E−07	2.E−07	–	2.E+04	1.E+04	–	St/St/
Ni-66 (Carbonyl)	–	2.E−07	–	–	1.E+04	–	/ET/
Cu-60	5.E−06	4.E−06	4.E−06	1.E+05	1.E+05	1.E+05	ET/ET/ET
Cu-61	3.E−06	3.E−06	3.E−06	1.E+05	1.E+05	1.E+05	ET/ET/ET
Cu-64	4.E−06	3.E−06	3.E−06	1.E+05	1.E+05	1.E+05	ET/E/E
Cu-67	2.E−06	1.E−06	9.E−07	8.E+04	3.E+04	3.E+04	ET/St/St
Zn-62	–	–	8.E−07	–	–	3.E+04	/ /St
Zn-63	–	–	5.E−06	–	–	2.E+05	/ /ET
Zn-65	–	–	2.E−07	–	–	7.E+03	/ /St
Zn-69m	–	–	1.E−06	–	–	6.E+04	/ /St
Zn-69	–	–	7.E−06	–	–	2.E+05	/ /ET
Zn-71m	–	–	1.E−06	–	–	5.E+04	/ /ET
Zn-72	–	–	3.E−07	–	–	1.E+04	/ /St
Ga-65	1.E−05	9.E−06	–	4.E+05	3.E+05	–	ET/ET/
Ga-66	8.E−07	7.E−07	–	3.E+04	2.E+04	–	ET/St/
Ga-67	3.E−06	2.E−06	–	1.E+05	7.E+04	–	ET/St/
Ga-68	6.E−06	4.E−06	–	2.E+05	1.E+05	–	ET/ET/
Ga-70	1.E−05	1.E−05	–	6.E+05	4.E+05	–	ET/ET/
Ga-72	5.E−07	5.E−07	–	2.E+04	2.E+04	–	ET/ET/
Ga-73	4.E−06	2.E−06	–	1.E+05	1.E+05	–	ET/St/
Ge-66	2.E−06	2.E−06	–	9.E+04	9.E+04	–	ET/ET/
Ge-67	1.E−05	7.E−06	–	3.E+05	2.E+05	–	ET/ET/
Ge-68	6.E−07	7.E−08	–	2.E+04	2.E+03	–	ET/St/
Ge-69	1.E−06	1.E−06	–	3.E+04	3.E+04	–	ET/ET/
Ge-71	5.E−05	5.E−05	–	2.E+06	1.E+06	–	ET/E/
Ge-75	1.E−05	7.E−06	–	4.E+05	2.E+05	–	ET/ET/
Ge-77	1.E−06	1.E−06	–	4.E+04	4.E+04	–	ET/ET/
Ge-78	3.E−06	3.E−06	–	1.E+05	1.E+05	–	ET/ET/
As-69	–	9.E−06	–	–	3.E+05	–	/ET/
As-70	–	2.E−06	–	–	8.E+04	–	/ET/
As-71	–	1.E−06	–	–	4.E+04	–	/St/
As-72	–	4.E−07	–	–	1.E+04	–	/St/
As-73	–	8.E−07	–	–	3.E+04	–	/St/
As-74	–	3.E−07	–	–	1.E+04	–	/St/
As-76	–	6.E−07	–	–	2.E+04	–	/St/
As-77	–	1.E−06	–	–	4.E+04	–	/St/
As-78	–	3.E−06	–	–	1.E+05	–	/ET/
Se-70	2.E−06	2.E−06	–	1.E+05	9.E+04	–	ET/ET/
Se-73m	1.E−05	1.E−05	–	5.E+05	4.E+05	–	ET/ET/
Se-73	1.E−06	1.E−06	–	6.E+04	5.E+04	–	ET/ET/
Se-75	4.E−07	3.E−07	–	1.E+04	1.E+04	–	St/St/
Se-79	3.E−07	1.E−07	–	1.E+04	6.E+03	–	K/St/
Se-81m	1.E−05	6.E−06	–	3.E+05	2.E+05	–	ET/ET/
Se-81	1.E−05	1.E−05	–	6.E+05	4.E+05	–	ET/ET/
Se-83	6.E−06	5.E−06	–	2.E+05	1.E+05	–	ET/ET/
Br-74m	3.E−06	2.E−06	–	1.E+05	1.E+05	–	ET/ET/
Br-74	4.E−06	4.E−06	–	1.E+05	1.E+05	–	ET/ET/
Br-75	4.E−06	3.E−06	–	1.E+05	1.E+05	–	ET/ET/
Br-76	5.E−07	5.E−07	–	2.E+04	2.E+04	–	ET/ET/
Br-77	2.E−06	2.E−06	–	7.E+04	7.E+04	–	ET/ET/
Br-80m	6.E−06	5.E−06	–	2.E+05	2.E+05	–	ET/St/
Br-80	3.E−05	2.E−05	–	1.E+06	7.E+05	–	ET/ET/
Br-82	3.E−07	3.E−07	–	1.E+04	1.E+04	–	ET/ET/
Br-83	9.E−06	6.E−06	–	3.E+05	2.E+05	–	ET/ET/
Br-84	7.E−06	5.E−06	–	2.E+05	2.E+05	–	ET/ET/
Rb-79	8.E−06	–	–	2.E+05	–	–	ET/ /
Rb-81m	1.E−05	–	–	6.E+05	–	–	ET/ /
Rb-81	2.E−06	–	–	1.E+05	–	–	ET/ /
Rb-82m	8.E−07	–	–	3.E+04	–	–	ET/ /
Rb-83	5.E−07	–	–	2.E+04	–	–	St/ /
Rb-84	3.E−07	–	–	1.E+04	–	–	St/ /

Radionuclide	Material type [3]			Material type [3]			Stochastic or organ [1]
	μCi/ml			Bq/m [3]			
	F	M	S	F	M	S	(F/M/S)
Rb-86	4.E−07	–	–	1.E+04	–	–	St/ /
Rb-87	7.E−07	–	–	2.E+04	–	–	St/ /
Rb-88	1.E−05	–	–	5.E+05	–	–	ET/ /
Rb-89	1.E−05	–	–	3.E+05	–	–	ET/ /
Sr-80	3.E−06	–	2.E−06	1.E+05	–	9.E+04	ET/ /St
Sr-81	7.E−06	–	5.E−06	2.E+05	–	2.E+05	ET/ /ET
Sr-82	1.E−07	–	7.E−08	6.E+03	–	2.E+03	St/ /St
Sr-83	1.E−06	–	9.E−07	3.E+04	–	3.E+04	ET/ /ET
Sr-85m	4.E−05	–	3.E−05	1.E+06	–	1.E+06	ET/ /ET
Sr-85	1.E−06	–	8.E−07	3.E+04	–	3.E+04	St/ /St
Sr-87m	1.E−05	–	9.E−06	4.E+05	–	3.E+05	ET/ /ET
Sr-89	4.E−07	–	1.E−07	1.E+04	–	3.E+03	St/ /St
Sr-90	1.E−08	–	7.E−	4.E+02	–	2.E+02	BS/ /St
Sr-91	1.E−06	–	9.E−07	5.E+04	–	3.E+04	ET/ /St
Sr-92	2.E−06	–	1.E−06	8.E+04	–	6.E+04	ET/ /St
Y-86m	–	7.E−06	6.E−06	–	2.E+05	2.E+05	/ET/ET
Y-86	–	4.E−07	4.E−07	–	1.E+04	1.E+04	/ET/ET
Y-87	–	9.E−07	8.E−07	–	3.E+04	3.E+04	/ET/ET
Y-88	–	1.E−07	1.E−07	–	6.E+03	6.E+03	/St/St
Y-90m	–	4.E−06	4.E−06	–	1.E+05	1.E+05	/St/St
Y-90	–	3.E−07	3.E−07	–	1.E+04	1.E+04	/St/St
Y-91m	–	2.E−05	2.E−05	–	7.E+05	7.E+05	/ET/ET
Y-91	–	1.E−07	9.E−08	–	4.E+03	3.E+03	/St/St
Y-92	–	2.E−06	2.E−06	–	7.E+04	7.E+04	/St/St
Y-93	–	9.E−07	9.E−07	–	3.E+04	3.E+04	/St/St
Y-94	–	8.E−06	8.E−06	–	3.E+05	3.E+05	/ET/ET
Y-95	–	1.E−05	1.E−05	–	4.E+05	4.E+05	/ET/ET
Zr-86	5.E−07	5.E−07	5.E−07	2.E+04	2.E+04	2.E+04	T/ET/ET
Zr-88	1.E−07	3.E−07	3.E−07	5.E+03	1.E+04	1.E+04	St/St/St
Zr-89	6.E−07	6.E−07	6.E−07	2.E+04	2.E+04	2.E+04	ET/ET/ET
Zr-93	3.E−09	1.E−08	1.E−07	1.E+02	6.E+02	5.E+03	BS/BS/BS
Zr-95	9.E−08	1.E−07	1.E−07	3.E+03	5.E+03	4.E+03	BS/St/St
Zr-97	7.E−07	4.E−07	4.E−07	2.E+04	1.E+04	1.E+04	ET/St/St
Nb-88	–	5.E−06	5.E−06	–	1.E+05	1.E+05	/ET/ET
Nb-89 (66 min)	–	3.E−06	3.E−06	–	1.E+05	1.E+05	/ET/ET
Nb-89 (122 min)	–	2.E−06	2.E−06	–	1.E+05	1.E+05	/ET/ET
							min)
Nb-90	–	3.E−07	3.E−07	–	1.E+04	1.E+04	/ET/ET
Nb-93m	–	1.E−06	6.E−07	–	7.E+04	2.E+04	/St/St
Nb-94	–	7.E−08	2.E−08	–	2.E+03	8.E+02	/St/St
Nb-95m	–	7.E−07	6.E−07	–	2.E+04	2.E+04	/St/St
Nb-95	–	4.E−07	4.E−07	–	1.E+04	1.E+04	/St/St
Nb-96	–	4.E−07	4.E−07	–	1.E+04	1.E+04	/ET/ET
Nb-97	–	5.E−06	5.E−06	–	1.E+05	1.E+05	/ET/ET
Nb-98	–	3.E−06	3.E−06	–	1.E+05	.E+05	/ET/ET
Mo-90	8.E−07	–	7.E−07	3.E+04	–	2.E+04	ET/ /ET
Mo-93m	1.E−06	–	1.E−06	3.E+04	–	3.E+04	ET/ /ET
Mo-93	2.E−07	–	4.E−07	7.E+03	–	1.E+04	BS/ /St
Mo-99	1.E−06	–	5.E−07	5.E+04	–	1.E+04	E/ /St
Mo-101	8.E−06	–	6.E−06	3.E+05	–	2.E+05	ET/ /ET
Tc-93m	8.E−06	7.E−06	–	3.E+05	2.E+05	–	ET/ET/
Tc-93	3.E−06	3.E−06	–	1.E+05	1.E+05	–	ET/ET/
Tc-94m	5.E−06	4.E−06	–	1.E+05	1.E+05	–	ET/ET/
Tc-94	1.E−06	1.E−06	–	4.E+04	3.E+04	–	ET/ET/
Tc-95m	8.E−07	6.E−07	–	3.E+04	2.E+04	–	ET/St/
Tc-95	1.E−06	1.E−06	–	5.E+04	5.E+04	–	ET/ET/
Tc-96m	2.E−05	2.E−05	–	1.E+06	1.E+06	–	ET/ET/
Tc-96	3.E−07	3.E−07	–	1.E+04	1.E+04	–	ET/ET/
Tc-97m	1.E−06	2.E−07	–	5.E+04	7.E+03	–	St/St/
Tc-97	4.E−06	3.E−06	–	1.E+05	1.E+05	–	ET/St/
Tc-98	3.E−07	9.E−08	–	1.E+04	3.E+03	–	St/St/
Tc-99m	1.E−05	1.E−05	–	5.E+05	4.E+05	–	ET/ET/
Tc-99	1.E−06	1.E−07	–	5.E+04	6.E+03	–	St/St/
Tc-101	1.E−05	1.E−05	–	6.E+05	4.E+05	–	ET/ET/
Tc-104	9.E−06	7.E−06	–	3.E+05	2.E+05	–	ET/ET/
Ru-94	5.E−06	5.E−06	5.E−06	2.E+05	1.E+05	1.E+05	ET/ET/ET
Ru-97	2.E−06	2.E−06	2.E−06	8.E+04	8.E+04	8.E+04	ET/ET/ET
Ru-103	8.E−07	2.E−07	2.E−07	3.E+04	1.E+04	9.E+03	St/St/St
Ru-105	2.E−06	2.E−06	2.E−06	9.E+04	8.E+04	8.E+04	ET/ET/ET
Ru-106	5.E−08	3.E−08	1.E−08	2.E+03	1.E+03	5.E+02	St/St/St

Radionuclide	Material type [3]			Material type [3]			Stochastic or organ [1]
	μCi/ml			Bq/m [3]			(F/M/S)
	F	M	S	F	M	S	
Rh-99m	3.E−06	3.E−06	3.E−06	1.E+05	1.E+05	1.E+05	ET/ET/ET
Rh-99	8.E−07	6.E−07	6.E−07	3.E+04	2.E+04	2.E+04	ET/St/St
Rh-100	5.E−07	5.E−07	5.E−07	1.E+04	1.E+04	1.E+04	ET/ET/ET
Rh-101m	1.E−06	1.E−06	1.E−06	6.E+04	6.E+04	6.E+04	ET/ET/ET
Rh-101	3.E−07	3.E−07	1.E−07	1.E+04	1.E+04	6.E+03	St/St/St
Rh-102m	2.E−07	2.E−07	1.E−07	1.E+04	7.E+03	4.E+03	St/St/St
Rh-102	6.E−08	1.E−07	6.E−08	2.E+03	4.E+03	2.E+03	St/St/St
Rh-103m	4.E−04	2.E−04	2.E−04	1.E+07	8.E+06	8.E+06	St/St/St
Rh-105	3.E−06	1.E−06	1.E−06	1.E+05	5.E+04	4.E+04	ET/St/St
Rh-106m	1.E−06	1.E−06	1.E−06	6.E+04	5.E+04	5.E+04	ET/ET/ET
Rh-107	1.E−05	9.E−06	9.E−06	5.E+05	3.E+05	3.E+05	ET/ET/ET
Pd-100	5.E−07	5.E−07	5.E−07	2.E+04	2.E+04	2.E+04	ET/ET/ET
Pd-101	3.E−06	3.E−06	3.E−06	1.E+05	1.E+05	1.E+05	ET/ET/ET
Pd-103	4.E−06	1.E−06	1.E−06	1.E+05	6.E+04	7.E+04	E/St/St
Pd-107	1.E−05	1.E−05	1.E−06	5.E+05	4.E+05	7.E+04	K/St/St
Pd-109	2.E−06	1.E−06	1.E−06	9.E+04	4.E+04	4.E+04	St/St/St
Ag-102	9.E−06	7.E−06	7.E−06	3.E+05	2.E+05	2.E+05	ET/ET/ET
Ag-103	8.E−06	7.E−06	7.E−06	3.E+05	2.E+05	2.E+05	ET/ET/ET
Ag-104m	8.E−06	6.E−06	6.E−06	2.E+05	2.E+05	2.E+05	ET/ET/ET
Ag-104	3.E−06	3.E−06	3.E−06	1.E+05	1.E+05	1.E+05	ET/ET/ET
Ag-105	7.E−07	8.E−07	7.E−07	2.E+04	2.E+04	2.E+04	St/St/St
Ag-106m	2.E−07	2.E−07	2.E−07	9.E+03	9.E+03	9.E+03	ET/ET/ET
Ag-106	1.E−05	1.E−05	1.E−05	5.E+05	4.E+05	4.E+05	ET/ET/ET
Ag-108m	7.E−08	1.E−07	2.E−08	2.E+03	4.E+03	1.E+03	St/St/St
Ag-110m	8.E−08	9.E−08	7.E−08	3.E+03	3.E+03	2.E+03	St/St/St
Ag-111	9.E−07	3.E−07	3.E−07	3.E+04	1.E+04	1.E+04	St/St/St
Ag-112	4.E−06	2.E−06	2.E−06	1.E+05	8.E+04	8.E+04	E/St/St
Ag-115	1.E−05	8.E−06	8.E−06	4.E+05	3.E+05	3.E+05	ET/ET/ET
Cd-104	4.E−06	4.E−06	4.E−06	1.E+05	1.E+05	1.E+05	ET/ET/ET
Cd-107	5.E−06	5.E−06	4.E−06	2.E+05	1.E+05	1.E+05	ET/ET/ET
Cd-109	2.E−08	9.E−08	1.E−07	9.E+02	3.E+03	4.E+03	K/K/St
Cd-113m	1.E−09	6.E–09	1.E−08	6.E+01	2.E+02	6.E+02	K/K/K
Cd-113	1.E−09	5.E−09	1.E−08	5.E+01	2.E+02	5.E+02	K/K/K
Cd-115m	3.E−08	1.E−07	1.E−07	1.E+03	3.E+03	3.E+03	K/St/St
Cd-115	9.E−07	4.E−07	4.E−07	3.E+04	1.E+04	1.E+04	K/St/St
Cd-117m	1.E−06	1.E−06	1.E−06	4.E+04	4.E+04	4.E+04	ET/ET/ET
Cd-117	2.E−06	2.E−06	2.E−06	8.E+04	7.E+04	7.E+04	ET/ET/ET
In-109	4.E−06	4.E−06	–	1.E+05	1.E+05	–	ET/ET/
In-110 (69 min)	5.E−06	4.E−06	–	1.E+05	1.E+05	–	ET/ET/
In-110 (5 h)	9.E−07	9.E−07	–	3.E+04	3.E+04	–	ET/ET/
In-111	1.E−06	1.E−06	–	5.E+04	5.E+04	–	ET/ET/
In-112	2.E−05	1.E−05	–	9.E+05	6.E+05	–	ET/ET/
In-113m	1.E−05	1.E−05	–	4.E+05	3.E+05	–	ET/ET/
In-114m	5.E−08	9.E−08	–	1.E+03	3.E+03	–	St/St/
In-115m	6.E−06	5.E−06	–	2.E+05	2.E+05	–	ET/ET/
In-115	1.E−09	5.E−09	–	4.E+01	1.E+02	–	St/St/
In-116m	4.E−06	3.E−06	–	1.E+05	1.E+05	–	ET/ET/
In-117m	5.E−06	4.E−06	–	2.E+05	1.E+05	–	ET/ET/
In-117	7.E−06	5.E−06	–	2.E+05	2.E+05	–	ET/ET/
In-119m	1.E−05	1.E−05	–	6.E+05	4.E+05	–	ET/ET/
Sn-110	1.E−06	1.E−06	–	6.E+04	6.E+04	–	ET/ET/
Sn-111	1.E−05	1.E−05	–	6.E+05	5.E+05	–	ET/ET/
Sn-113	7.E−07	2.E−07	–	2.E+04	1.E+04	–	St/St/
Sn-117m	8.E−07	2.E−07	–	3.E+04	9.E+03	–	BS/St/
Sn-119m	1.E−06	3.E−07	–	5.E+04	1.E+04	–	St/St/
Sn-121m	5.E−07	1.E−07	–	2.E+04	6.E+03	–	St/St/
Sn-121	4.E−06	2.E−06	–	1.E+05	7.E+04	–	ET/St/
Sn-123m	1.E−05	7.E−06	–	4.E+05	2.E+05	–	ET/ET/
Sn-123	3.E−07	1.E−07	–	1.E+04	3.E+03	–	St/St/
Sn-125	4.E−07	2.E−07	–	1.E+04	7.E+03	–	St/St/
Sn-126	4.E−08	3.E−08	–	1.E+03	1.E+03	–	St/St/
Sn-127	2.E−06	2.E−06	–	9.E+04	7.E+04	–	ET/ET/
Sn-128	2.E−06	2.E−06	–	1.E+05	8.E+04	–	ET/ET/
Sb-115	1.E−05	1.E−05	–	5.E+05	4.E+05	–	ET/ET/
Sb-116m	3.E−06	2.E−06	–	1.E+05	1.E+05	–	ET/ET/
Sb-116	1.E−05	1.E−05	–	4.E+05	3.E+05	–	ET/ET/
Sb-117	1.E−05	1.E−05	–	4.E+05	3.E+05	–	ET/ET/
Sb-118m	1.E−06	1.E−06	–	4.E+04	4.E+04	–	ET/ET/
Sb-119	6.E−06	6.E−06	–	2.E+05	2.E+05	–	ET/ET/
Sb-120 (16 min)	2.E−05	2.E−05	–	1.E+06	7.E+05	–	ET/ET/

Radionuclide	Material type [3]			Material type [3]			Stochastic or organ [1]
	μCi/ml			Bq/m [3]			
	F	M	S	F	M	S	(F/M/S)
Sb-120 (6 d)	3.E−07	3.E−07	–	1.E+04	1.E+04	–	ET/ET/
Sb-122	8.E−07	4.E−07	–	3.E+04	1.E+04	–	St/St/
Sb-124m	4.E−05	3.E−05	–	1.E+06	1.E+06	–	ET/ET/
Sb-124	2.E−07	1.E−07	–	1.E+04	4.E+03	–	St/St/
Sb-125	2.E−07	1.E−07	–	7.E+03	6.E+03	–	BS/St/
Sb-126m	1.E−05	7.E−06	–	3.E+05	2.E+05	–	ET/ET/
Sb-126	2.E−07	1.E−07	–	9.E+03	6.E+03	–	ET/St/
Sb-127	7.E−07	3.E−07	–	2.E+04	1.E+04	–	E/St/
Sb-128 (9 h)	5.E−07	5.E−07	–	2.E+04	2.E+04	–	ET/ET/
Sb-128 (10 min)	1.E−05	9.E−06	–	4.E+05	3.E+05	–	ET/ET/
Sb-129	1.E−06	1.E−06	–	6.E+04	5.E+04	–	ET/ET/
Sb-130	3.E−06	2.E−06	–	1.E+05	1.E+05	–	ET/ET/
Sb-131	6.E−06	4.E−06	–	2.E+05	1.E+05	–	ET/ET/
Te-116 (Vapor)	–	6.E−06	–	–	2.E+05	–	/St/
Te-116	2.E−06	2.E−06	–	8.E+04	7.E+04	–	ET/ET/
Te-121m (Vapor)	–	4.E−08	–	–	1.E+03	–	/BS/
Te-121m	1.E−07	1.E−07	–	4.E+03	5.E+03	–	BS/St/
Te-121 (Vapor)	–	1.E−06	–	–	4.E+04	–	/St/
Te-121	1.E−06	1.E−06	–	3.E+04	3.E+04	–	ET/ET/
Te-123m (Vapor)	–	5.E−08	–	–	2.E+03	–	/BS/
Te-123m	1.E−07	1.E−07	–	4.E+03	6.E+03	–	BS/St/
Te-123 (Vapor)	–	1.E−08	–	–	4.E+02	–	/BS/
Te-123	2.E−08	5.E−08	–	1.E+03	1.E+03	–	BS/BS/
Te-125m (Vapor)	–	1.E−07	–	–	3.E+03	–	/BS/
Te-125m	2.E−07	1.E−07	–	9.E+03	7.E+03	–	BS/St/
Te-127m (Vapor)	–	6.E−08	–	–	2.E+03	–	/BS/
Te-127m	1.E−07	9.E−08	–	5.E+03	3.E+03	–	BS/St/
Te-127 (Vapor)	–	7.E−06	–	–	2.E+05	–	/St/
Te-127	5.E−06	3.E−06	–	2.E+05	1.E+05	–	ET/St/
Te-129m (Vapor)	–	1.E−07	–	–	5.E+03	–	/St/
Te-129m	3.E−07	1.E−07	–	1.E+04	3.E+03	–	St/St/
Te-129 (Vapor)	–	1.E−05	–	–	5.E+05	–	/St/
Te-129	1.E−05	7.E−06	–	4.E+05	2.E+05	–	ET/ET/
Te-131m (Vapor)	–	1.E−07	–	–	5.E+03	–	/T/
Te-131m	3.E−07	3.E−07	–	1.E+04	1.E+04	–	T/St/
Te-131 (Vapor)	–	6.E−06	–	–	2.E+05	–	/T/
Te-131	1.E−05	7.E−06	–	4.E+05	2.E+05	–	ET/ET/
Te-132 (Vapor)	–	7.E−08	–	–	2.E+03	–	/T/
Te-132	1.E−07	1.E−07	–	6.E+03	6.E+03	–	T/St/
Te-133m (Vapor)	–	1.E−06	–	–	6.E+04	–	/T/
Te-133m	3.E−06	2.E−06	–	1.E+05	1.E+05	–	T/ET/
Te-133 (Vapor)	–	7.E−06	–	–	2.E+05	–	/T/
Te-133	1.E−05	9.E−06	–	4.E+05	3.E+05	–	ET/ET/
Te-134 (Vapor)	–	6.E−06	–	–	2.E+05	–	/St/
Te-134	3.E−06	2.E−06	–	1.E+05	1.E+05	–	ET/ET/
I-120m (Methyl)	4.E−06	–	–	1.E+05	–	–	T/ /
I-120m (Vapor)	–	3.E−06	–	–	1.E+05	–	/St/
I-120m	2.E−06	–	–	8.E+04	–	–	ET/ /
I-120 (Methyl)	1.E−06	–	–	6.E+04	–	–	T/ /
I-120 (Vapor)	–	1.E−06	–	–	5.E+04	–	/T/
I-120	2.E−06	–	–	1.E+05	–	–	E/ /
I-121 (Methyl)	5.E−06	–	–	2.E+05	–	–	T/ /
I-121 (Vapor)	–	4.E−06	–	–	1.E+05	–	/T/
I-121	8.E−06	–	–	3.E+05	–	–	T/ /
I-123 (Methyl)	1.E−06	–	–	7.E+04	–	–	T/ /
I-123 (Vapor)	–	1.E−06	–	–	5.E+04	–	/T/
I-123	2.E−06	–	–	1.E+05	–	–	T/ /
I-124 (Methyl)	3.E−08	–	–	1.E+03	–	–	T/ /
I-124 (Vapor)	–	2.E−08	–	–	9.E+02	–	/T/
I-124	4.E−08	–	–	1.E+03	–	–	T/ /
I-125 (Methyl)	2.E−08	–	–	9.E+02	–	–	T/ /
I-125 (Vapor)	–	2.E−08	–	–	7.E+02	–	/T/
I-125	3.E−08	–	–	1.E+03	–	–	T/ /
I-126 (Methyl)	1.E−08	–	–	5.E+02	–	–	T/ /
I-126 (Vapor)	–	1.E−08	–	–	4.E+02	–	/T/
I-126	2.E−08	–	–	7.E+02	–	–	T/ /
I-128 (Methyl)	3.E−05	–	–	1.E+06	–	–	T/ /
I-128 (Vapor)	–	8.E−06	–	–	3.E+05	–	/St/
I-128	1.E−05	–	–	6.E+05	–	–	ET/ /
I-129 (Methyl)	3.E−09	–	–	1.E+02	–	–	T/ /

Radionuclide	Material type [3]			Material type [3]			Stochastic or organ [1]
	μCi/ml			Bq/m [3]			
	F	M	S	F	M	S	(F/M/S)
I-129 (Vapor)	–	2.E−09	–	–	1.E+02	–	/T/
I-129	5.E−09	–	–	2.E+02	–	–	T/ /
I-130 (Methyl)	2.E−07	–	–	7.E+03	–	–	T/ /
I-130 (Vapor)	–	1.E−07	–	–	6.E+03	–	/T/
I-130	3.E−07	–	–	1.E+04	–	–	T/ /
I-131 (Methyl)	1.E−08	–	–	6.E+02	–	–	T/ /
I-131 (Vapor)	–	1.E−08	–	–	5.E+02	–	/T/
I-131	2.E−08	–	–	9.E+02	–	–	T/ /
I-132m (Methyl)	1.E−06	–	–	7.E+04	–	–	T/ /
I-132m (Vapor)	–	1.E−06	–	–	6.E+04	–	/T/
I-132m	3.E−06	–	–	1.E+05	–	–	T/ /
I-132 (Methyl)	1.E−06	–	–	6.E+04	–	–	T/ /
I-132 (Vapor)	–	1.E−06	–	–	5.E+04	–	/T/
I-132	2.E−06	–	–	7.E+04	–	–	T/ /
I-133 (Methyl)	9.E−08	–	–	3.E+03	–	–	T/ /
I-133 (Vapor)	–	7.E−08	–	–	2.E+03	–	/T/
I-133	1.E−07	–	–	5.E+03	–	–	T/ /
I-134 (Methyl)	8.E−06	–	–	2.E+05	–	–	T/ /
I-134 (Vapor)	–	3.E−06	–	–	1.E+05	–	/St/
I-134	3.E−06	–	–	1.E+05	–	–	ET/ /
I-135 (Methyl)	4.E−07	–	–	1.E+04	–	–	T/ /
I-135 (Vapor)	–	3.E−07	–	–	1.E+04	–	/T/
I-135	6.E−07	–	–	2.E+04	–	–	T/ /
Cs-125	1.E−05	–	–	4.E+05	–	–	ET/ /
Cs-127	4.E−06	–	–	1.E+05	–	–	ET/ /
Cs-129	2.E−06	–	–	9.E+04	–	–	ET/ /
Cs-130	1.E−05	–	–	6.E+05	–	–	ET/ /
Cs-131	7.E−06	–	–	2.E+05	–	–	ET/ /
Cs-132	9.E−07	–	–	3.E+04	–	–	ET/ /
Cs-134m	8.E−06	–	–	2.E+05	–	–	ET/ /
Cs-134	5.E−08	–	–	2.E+03	–	–	St/ /
Cs-135m	8.E−06	–	–	2.E+05	–	–	ET/ /
Cs-135	5.E−07	–	–	2.E+04	–	–	St/ /
Cs-136	2.E−07	–	–	1.E+04	–	–	E/ /
Cs-137	8.E−08	–	–	3.E+03	–	–	St/ /
Cs-138	5.E−06	–	–	2.E+05	–	–	ET/ /
Ba-126	4.E−06	–	–	1.E+05	–	–	ET/ /
Ba-128	4.E−07	–	–	1.E+04	–	–	St/ /
Ba-131m	4.E−05	–	–	1.E+06	–	–	ET/ /
Ba-131	1.E−06	–	–	4.E+04	–	–	ET/ /
Ba-133m	2.E−06	–	–	7.E+04	–	–	St/ /
Ba-133	3.E−07	–	–	1.E+04	–	–	St/ /
Ba-135m	2.E−06	–	–	9.E+04	–	–	St/ /
Ba-139	1.E−05	–	–	3.E+05	–	–	St/ /
Ba-140	3.E−07	–	–	1.E+04	–	–	St/ /
Ba-141	1.E−05	–	–	4.E+05	–	–	ET/ /
Ba-142	9.E−06	–	–	3.E+05	–	–	ET/ /
La-131	1.E−05	8.E−06	–	4.E+05	3.E+05	–	ET/ET/
La-132	1.E−06	1.E−06	–	5.E+04	5.E+04	–	ET/ET/
La-135	1.E−05	1.E−05	–	4.E+05	4.E+05	–	ET/ET/
La-137	4.E−08	2.E−07	–	1.E+03	8.E+03	–	L/L/
La-138	3.E−09	1.E−08	–	1.E+02	4.E+02	–	St/St/
La-140	4.E−07	3.E−07	–	1.E+04	1.E+04	–	ET/St/
La-141	5.E−06	2.E−06	–	1.E+05	9.E+04	–	St/St/
La-142	2.E−06	2.E−06	–	9.E+04	8.E+04	–	ET/ET/
La-143	1.E−05	1.E−05	–	6.E+05	4.E+05	–	ET/ET/
Ce-134	–	3.E−07	3.E−07	–	1.E+04	1.E+04	/St/St
Ce-135	–	5.E−07	5.E−07	–	2.E+04	2.E+04	/ET/ET
Ce-137m	–	1.E−06	9.E−07	–	3.E+04	3.E+04	/St/St
Ce-137	–	1.E−05	1.E−05	–	7.E+05	7.E+05	/ET/ET
Ce-139	–	4.E−07	4.E−07	–	1.E+04	1.E+04	/St/St
Ce-141	–	2.E−07	1.E−07	–	7.E+03	6.E+03	/St/St
Ce-143	–	5.E−07	5.E−07	–	2.E+04	2.E+04	/St/St
Ce-144	–	2.E−08	1.E−08	–	9.E+02	7.E+02	/St/St
Pr-136	–	1.E−05	1.E−05	–	3.E+05	3.E+05	/ET/ET
Pr-137	–	9.E−06	9.E−06	–	3.E+05	3.E+05	/ET/ET
Pr-138m	–	2.E−06	2.E−06	–	7.E+04	7.E+04	/ET/ET
Pr-139	–	1.E−05	1.E−05	–	5.E+05	5.E+05	/ET/ET
Pr-142m	–	6.E−05	5.E−05	–	2.E+06	2.E+06	/St/St
Pr-142	–	8.E−07	7.E−07	–	2.E+04	2.E+04	/St/St

Radionuclide	Material type [3]			Material type [3]			Stochastic or organ [1]
	μCi/ml			Bq/m [3]			(F/M/S)
	F	M	S	F	M	S	
Pr-143	–	2.E−07	2.E−07	–	1.E+04	9.E+03	/St/St
Pr-144	–	1.E−05	1.E−05	–	4.E+05	4.E+05	/ET/ET
Pr-145	–	2.E−06	2.E−06	–	8.E+04	8.E+04	/St/St
Pr-147	–	9.E−06	9.E−06	–	3.E+05	3.E+05	/ET/ET
Nd-136	–	4.E−06	4.E−06	–	1.E+05	1.E+05	/ET/ET
Nd-138	–	1.E−06	1.E−06	–	5.E+04	5.E+04	/St/St
Nd-139m	–	1.E−06	1.E−06	–	5.E+04	5.E+04	/ET/ET
Nd-139	–	1.E−05	1.E−05	–	6.E+05	6.E+05	/ET/ET
Nd-141	–	3.E−05	3.E−05	–	1.E+06	1.E+06	/ET/ET
Nd-147	–	2.E−07	2.E−07	–	1.E+04	9.E+03	/St/St
Nd-149	–	4.E−06	4.E−06	–	1.E+05	1.E+05	/ET/ET
Nd-151	–	9.E−06	9.E−06	–	3.E+05	3.E+05	/ET/ET
Pm-141	–	1.E−05	1.E−05	–	4.E+05	4.E+05	/ET/ET
Pm-143	–	5.E−07	6.E−07	–	2.E+04	2.E+04	/St/St
Pm-144	–	1.E−07	1.E−07	–	3.E+03	5.E+03	/St/St
Pm-145	–	1.E−07	4.E−07	–	5.E+03	1.E+04	/BS/St
Pm-146	–	4.E−08	6.E−08	–	1.E+03	2.E+03	/St/St
Pm-147	–	1.E−07	1.E−07	–	4.E+03	6.E+03	/BS/St
Pm-148m	–	1.E−07	1.E−07	–	5.E+03	4.E+03	/St/St
Pm-148	–	2.E−07	2.E−07	–	9.E+03	9.E+03	/St/St
Pm-149	–	7.E−07	6.E−07	–	2.E+04	2.E+04	/St/St
Pm-150	–	2.E−06	2.E−06	–	8.E+04	8.E+04	/ET/ET
Pm-151	–	9.E−07	8.E−07	–	3.E+04	3.E+04	/St/St
Sm-141m	–	5.E−06	–	–	2.E+05	–	/ET/
Sm-141	–	1.E−05	–	–	4.E+05	–	/ET/
Sm-142	–	4.E−06	–	–	1.E+05	–	/ET/
Sm-145	–	4.E−07	–	–	1.E+04	–	/BS/
Sm-146	–	2.E−11	–	–	1.E+00	–	/BS/
Sm-147	–	2.E−11	–	–	1.E+00	–	/BS/
Sm-151	–	7.E−08	–	–	2.E+03	–	/BS/
Sm-153	–	8.E−07	–	–	3.E+04	–	St/
Sm-155	–	1.E−05	–	–	3.E+05	–	/ET/
Sm-156	–	2.E−06	–	–	7.E+04	–	/St/
Eu-145	–	5.E−07	–	–	2.E+04	–	/ET/
Eu-146	–	3.E−07	–	–	1.E+04	–	/ET/
Eu-147	–	5.E−07	–	–	2.E+04	–	/St/
Eu-148	–	2.E−07	–	–	9.E+03	–	/St/
Eu-149	–	2.E−06	–	–	9.E+04	–	/St/
Eu-150 (12 h)	–	2.E−06	–	–	7.E+04	–	/St/
Eu-150 (34 yr)	–	1.E−08	–	–	6.E+02	–	/St/
Eu-152m	–	1.E−06	–	–	6.E+04	–	/St/
Eu-152	–	2.E−08	–	–	7.E+02	–	/St/
Eu-154	–	1.E−08	–	–	5.E+02	–	/St/
Eu-155	–	7.E−08	–	–	2.E+03	–	/BS/
Eu-156	–	1.E−07	–	–	6.E+03	–	/St/
Eu-157	–	1.E−06	–	–	4.E+04	–	/St/
Eu-158	–	5.E−06	–	–	1.E+05	–	/ET/
Gd-145	9.E−06	7.E−06	–	3.E+05	2.E+05	–	ET/ET/
Gd-146	1.E−07	1.E−07	–	4.E+03	4.E+03	–	St/St/
Gd-147	7.E−07	6.E−07	–	2.E+04	2.E+04	–	ET/ET/
Gd-148	5.E−12	2.E−11	–	2.E−01	9.E−01	–	BS/BS/
Gd-149	1.E−06	7.E−07	–	4.E+04	2.E+04	–	St/St/
Gd-151	2.E−07	8.E−07	–	9.E+03	3.E+04	–	BS/St/
Gd-152	7.E−12	3.E−11	–	2.E−01	1.E+00	–	BS/BS/
Gd-153	9.E−08	4.E−07	–	3.E+03	1.E+04	–	BS/St/
Gd-159	3.E−06	1.E−06	–	1.E+05	5.E+04	–	St/St/
Tb-147	–	2.E−06	–	–	1.E+05	–	/ET/
Tb-149	–	1.E−07	–	–	6.E+03	–	/St/
Tb-150	–	2.E−06	–	–	8.E+04	–	/ET/
Tb-151	–	1.E−06	–	–	4.E+04	–	/ET/
Tb-153	–	2.E−06	–	–	8.E+04	–	/St/
Tb-154	–	5.E−07	–	–	2.E+04	–	/ET/
Tb-155	–	2.E−06	–	–	8.E+04	–	/St/
Tb-156m (24 h)	–	2.E−06	–	–	9.E+04	–	/St/
Tb-156m (5 h)	–	4.E−06	–	–	1.E+05	–	/St/
Tb-156	–	4.E−07	–	–	1.E+04	–	/E/
Tb-157	–	2.E−07	–	–	8.E+03	–	/BS/
Tb-158	–	1.E−08	–	–	6.E+02	–	/BS/
Tb-160	–	1.E−07	–	–	3.E+03	–	/St/
Tb-161	–	4.E−07	–	–	1.E+04	–	/St/

Radionuclide	Material type [3]			Material type [3]			Stochastic or organ [1]
	μCi/ml			Bq/m [3]			
	F	M	S	F	M	S	(F/M/S)
Dy-155	–	2.E−06	–	–	1.E+05	–	/ET/
Dy-157	–	5.E−06	–	–	1.E+05	–	/ET/
Dy-159	–	2.E−06	–	–	8.E+04	–	/BS/
Dy-165	–	6.E−06	–	–	2.E+05	–	/ET/
Dy-166	–	3.E−07	–	–	1.E+04	–	/St/
Ho-155	–	1.E−05	–	–	4.E+05	–	/ET/
Ho-157	–	2.E−05	–	–	1.E+06	–	/ET/
Ho-159	–	2.E−05	–	–	9.E+05	–	/ET/
Ho-161	–	3.E−05	–	–	1.E+06	–	/ET/
Ho-162m	–	9.E−06	–	–	3.E+05	–	/ET/
Ho-162	–	5.E−05	–	–	2.E+06	–	/ET/
Ho-164m	–	3.E−05	–	–	1.E+06	–	/St/
Ho-164	–	2.E−05	–	–	8.E+05	–	/ET/
Ho-166m	–	7.E−09	–	–	2.E+02	–	/St/
Ho-166	–	6.E−07	–	–	2.E+04	–	/St/
Ho-167	–	4.E−06	–	–	1.E+05	–	/ET/
Er-161	–	3.E−06	–	–	1.E+05	–	/ET/
Er-165	–	2.E−05	–	–	1.E+06	–	/ET/
Er-169	–	6.E−07	–	–	2.E+04	–	/St/
Er-171	–	1.E−06	–	–	6.E+04	–	/St/
Er-172	–	4.E−07	–	–	1.E+04	–	/St/
Tm-162	–	9.E−06	–	–	3E+05	–	/ET/
Tm-166	–	1.E−06	–	–	4.E+04	–	/ET/
Tm-167	–	5.E−07	–	–	2.E+04	–	/St/
Tm-170	–	1.E−07	–	–	4.E+03	–	/St/
Tm-171	–	2.E−07	–	–	9.E+03	–	/BS/
Tm-172	–	4.E−07	–	–	1.E+04	–	/St/
Tm-173	–	2.E−06	–	–	8.E+04	–	/St/
Tm-175	–	8.E−06	–	–	2.E+05	–	/ET/
Yb-162	–	1.E−05	1.E−05	–	5.E+05	5.E+05	/ET/ET
Yb-166	–	6.E−07	5.E−07	–	2.E+04	2.E+04	/St/St
Yb-167	–	3.E−05	3.E−05	–	1.E+06	1.E+06	/ET/ET
Yb-169	–	2.E−07	2.E−07	–	9.E+03	8.E+03	/St/St
Yb-175	–	8.E−07	8.E−07	–	3.E+04	2.E+04	/St/St
Yb-177	–	6.E−06	5.E−06	–	2.E+05	2.E+05	/ET/ET
Yb-178	–	5.E−06	5.E−06	–	1.E+05	1.E+05	/ET/E
Lu-169	–	9.E−07	9.E−07	–	3.E+04	3.E+04	/ET/ET
Lu-170	–	4.E−07	4.E−07	–	1.E+04	1.E+04	/ET/ET
Lu-171	–	6.E−07	6.E−07	–	2.E+04	2.E+04	/St/St
Lu-172	–	3.E−07	3.E−07	–	1.E+04	1.E+04	/St/St
Lu-173	–	2.E−07	4.E−07	–	8.E+03	1.E+04	/BS/St
Lu-174m	–	2.E−07	2.E−07	–	7.E+03	8.E+03	/BS/St
Lu-174	–	9.E−08	2.E−07	–	3.E+03	8.E+03	/BS/St
Lu-176m	–	3.E−06	3.E−06	–	1.E+05	1.E+05	/St/St
Lu-176	–	3.E−09	1.E−08	–	1.E+02	6.E+02	/BS/St
Lu-177m	–	5.E−08	4.E−08	–	2.E+03	1.E+03	/St/St
Lu-177	–	5.E−07	5.E−07	–	2.E+04	1.E+04	/St/St
Lu-178m	–	4.E−06	4.E−06	–	1.E+05	1.E+05	/ET/ET
Lu-178	–	8.E−06	8.E−06	–	3.E+05	3.E+05	/ET/ET
Lu-179	–	3.E−06	3.E−06	–	1.E+05	1.E+05	/St/St
Hf-170	1.E−06	1.E−06	–	4.E+04	4.E+04	–	ET/ET/
Hf-172	6.E−09	3.E−08	–	2.E+02	1.E+03	–	BS/BS/
Hf-173	2.E−06	2.E−06	–	9.E+04	8.E+04	–	ET/ET/
Hf-175	5.E−07	6.E−07	–	2.E+04	2.E+04	–	BS/St/
Hf-177m	2.E−06	1.E−06	–	9.E+04	6.E+04	–	ET/ET/
Hf-178m	8.E−10	4.E−09	–	3.E+01	1.E+02	–	BS/BS/
Hf-179m	2.E−07	1.E−07	–	8.E+03	6.E+03	–	BS/St/
Hf-180m	2.E−06	1.E−06	–	7.E+04	6.E+04	–	ET/ET/
Hf-181	1.E−07	1.E−07	–	4.E+03	5.E+03	–	BS/St/
Hf-182m	5.E−06	4.E−06	–	2.E+05	1.E+05	–	ET/ET/
Hf-182	5.E−10	2.E−09	–	2.E+01	9.E+01	–	BS/BS/
Hf-183	6.E−06	4.E−06	–	2.E+05	1.E+05	–	ET/ET/
Hf-184	1.E−06	1.E−06	–	5.E+04	4.E+04	–	ET/St/
Ta-172	–	5.E−06	5.E−06	–	1.E+05	1.E+05	/ET/ET
Ta-173	–	3.E−06	3.E−06	–	1.E+05	1.E+05	/E/E
Ta-174	–	5.E−06	5.E−06	–	2.E+05	2.E+05	/ET/ET
Ta-175	–	1.E−06	1.E−06	–	6.E+04	6.E+04	/ET/ET
Ta-176	–	1.E−06	1.E−06	–	3.E+04	3.E+04	/ET/ET
Ta-177	–	4.E−06	4.E−06	–	1.E+05	1.E+05	/St/St
Ta-178	–	3.E−06	3.E−06	–	1.E+05	1.E+05	/ET/ET

Radionuclide	Material type [3]			Material type [3]			Stochastic or organ [1]
	μCi/ml			Bq/m [3]			
	F	M	S	F	M	S	(F/M/S)
Ta-179	–	4.E−06	1.E−06	–	1.E+05	7.E+04	/St/St
Ta-180m	–	9.E−06	9.E−06	–	3.E+05	3.E+05	/St/St
Ta-180	–	1.E−07	4.E−08	–	4.E+03	1.E+03	/St/St
Ta-182m	–	6.E−06	6.E−06	–	2.E+05	2.E+05	/ET/ET
Ta-182	–	9.E−08	7.E−08	–	3.E+03	2.E+03	/St/St
Ta-183	–	3.E−07	2.E−07	–	1.E+04	1.E+04	/St/St
Ta-184	–	8.E−07	8.E−07	–	3.E+04	3.E+04	/ET/ET
Ta-185	–	5.E−06	5.E−06	–	2.E+05	1.E+05	/ET/ET
Ta-186	–	7.E−06	7.E−06	–	2.E+05	2.E+05	/ET/ET
W-176	3.E−06	–	–	1.E+05	–	–	ET/ /
W-177	5.E−06	–	–	2.E+05	–	–	ET/ /
W-178	3.E−06	–	–	1.E+05	–	–	ET/ /
W-179	1.E−04	–	–	5.E+06	–	–	ET/ /
W-181	1.E−05	–	–	4.E+05	–	–	ET/ /
W-185	2.E−06	–	–	9.E+04	–	–	St/ /
W-187	1.E−06	–	–	5.E+04	–	–	ET/ /
W-188	6.E−07	–	–	2.E+04	–	–	St/ /
Re-177	1.E−05	1.E−05	–	6.E+05	4.E+05	–	ET/ET/
Re-178	1.E−05	1.E−05	–	5.E+05	3.E+05	–	ET/ET/
Re-181	1.E−06	1.E−06	–	5.E+04	4.E+04	–	;ET/ET/
Re-182 (64 h)	4.E−07	3.E−07	–	1.E+04	1.E+04	–	ET/St/
Re-182 (12 h)	1.E−06	1.E−06	–	4.E+04	4.E+04	–	ET/ET/
Re-184m	6.E−07	1.E−07	–	2.E+04	4.E+03	–	St/St/
Re-184	7.E−07	3.E−07	–	2.E+04	1.E+04	–	ET/St/
Re-186m	4.E−07	7.E−08	–	1.E+04	2.E+03	–	St/St/
Re-186	7.E−07	4.E−07	–	2.E+04	1.E+04	–	St/St/
Re-187	2.E−04	1.E−04	–	8.E+06	4.E+06	–	St/St/
Re-188m	3.E−05	2.E−05	–	1.E+06	1.E+06	–	St/St/
Re-188	8.E−07	7.E−07	–	3.E+04	2.E+04	–	St/St/
Re-189	1.E−06	9.E−07	–	4.E+04	3.E+04	–	St/St/
Os-180	1.E−05	1.E−05	1.E−05	5.E+05	3.E+05	3.E+05	ET/ET/ET
Os-181	3.E−06	3.E−06	3.E−06	1.E+05	1.E+05	1.E+05	ET/ET/ET
Os-182	1.E−06	9.E−07	9.E−07	3.E+04	3.E+04	3.E+04	ET/ET/ET
Os-185	4.E−07	5.E−07	5.E−07	1.E+04	2.E+04	1.E+04	St/St/St
Os-189m	1.E−04	7.E−05	7.E−05	4.E+06	2.E+06	2.E+06	St/St/St
Os-191m	1.E−05	4.E−06	4.E−06	5.E+05	1.E+05	1.E+05	St/St/St
Os-191	1.E−06	4.E−07	3.E−07	5.E+04	1.E+04	1.E+04	St/St/St
Os-193	2.E−06	8.E−07	8.E−07	7.E+04	3.E+04	3.E+04	St/St/St
Os-194	4.E−08	4.E−08	1.E−08	1.E+03	1.E+03	4.E+02	St/St/St
Ir-182	9.E−06	7.E−06	7.E−06	3.E+05	2.E+05	2.E+05	ET/ET/ET
Ir-184	1.E−06	1.E−06	1.E−06	7.E+04	6.E+04	7.E+04	ET/ET/ET
Ir-185	2.E−06	1.E−06	1.E−06	7.E+04	7.E+04	7.E+04	ET/ET/ET
Ir-186 (16 h)	8.E−07	7.E−07	7.E−07	2.E+04	2.E+04	2.E+04	ET/ET/ET
Ir-186 (2 h)	5.E−06	4.E−06	4.E−06	1.E+05	1.E+05	1.E+05	ET/ET/ET
Ir-187	4.E−06	3.E−06	3.E−06	1.E+05	1.E+05	1.E+05	ET/ET/ET
Ir-188	6.E−07	6.E−07	6.E−07	2.E+04	2.E+04	2.E+04	ET/ET/ET
Ir-189	3.E−06	1.E−06	1.E−06	1.E+05	5.E+04	4.E+04	St/St/St
Ir-190m (3 h)	2.E−06	2.E−06	2.E−06	8.E+04	8.E+04	7.E+04	ET/ET/ET
Ir-190m (1 h)	9.E−05	5.E−05	5.E−05	3.E+06	2.E+06	1.E+06	ET/St/St
Ir-190	4.E−07	2.E−07	2.E−07	1.E+04	9.E+03	8.E+03	ET/St/St
Ir-192m	1.E−07	1.E−07	2.E−08	3.E+03	6.E+03	1.E+03	St/St/St
Ir-192	2.E−07	1.E−07	1.E−07	9.E+03	5.E+03	4.E+03	St/St/St
Ir-194m	8.E−08	8.E−08	6.E−08	3.E+03	3.E+03	2.E+03	St/St/St
Ir-194	1.E−06	7.E−07	7.E−07	5.E+04	2.E+04	2.E+04	St/St/St
Ir-195m	2.E−06	2.E−06	2.E−06	9.E+04	7.E+04	7.E+04	ET/ET/ET
Ir-195	7.E−06	5.E−06	4.E−06	2.E+05	1.E+05	1.E+05	ET/ET/ET
Pt-186	3.E−06	–	–	1.E+05	–	–	ET/ /
Pt-188	8.E−07	–	–	3.E+04	–	–	E/ /
Pt-189	3.E−06	–	–	1.E+05	–	–	ET/ /
Pt-191	1.E−06	–	–	7.E+04	–	–	ET/ /
Pt-193m	2.E−06	–	–	8.E+04	–	–	ET/ /
Pt-193	2.E−05	–	–	7.E+05	–	–	ET/ /
Pt-195m	1.E−06	–	–	5.E+04	–	–	ET/ /
Pt-197m	7.E−06	–	–	2.E+05	–	–	ET/ /
Pt-197	3.E−06	–	–	1.E+05	–	–	ET/ /
Pt-199	1.E−05	–	–	4.E+05	–	–	ET/ /
Pt-200	1.E−06	–	–	5.E+04	–	–	St/ /
Au-193	4.E−06	3.E−06	3.E−06	1.E+05	1.E+05	1.E+05	ET/E/St
Au-194	9.E−07	9.E−07	9.E−07	3.E+04	3.E+04	3.E+04	ET/ET/ET
Au-195	3.E−06	7.E−07	4.E−07	1.E+05	2.E+04	1.E+04	ET/St/St

Radionuclide	Material type [3]			Material type [3]			Stochastic or organ [1]
	μCi/ml			Bq/m [3]			
	F	M	S	F	M	S	(F/M/S)
Au-198m	6.E−07	2.E−07	2.E−07	2.E+04	1.E+04	1.E+04	ET/St/St
Au-198	1.E−06	5.E−07	5.E−07	4.E+04	2.E+04	1.E+04	ET/St/St
Au-199	2.E−06	8.E−07	7.E−07	7.E+04	3.E+04	2.E+04	ET/St/St
Au-200m	5.E−07	4.E−07	4.E−07	1.E+04	1.E+04	1.E+04	ET/ET/ET
Au-200	1.E−05	7.E−06	7.E−06	4.E+05	2.E+05	2.E+05	ET/ET/ET
Au-201	1.E−05	1.E−05	9.E−06	5.E+05	3.E+05	3.E+05	ET/ET/ET
Hg-193m (Org)	1.E−06	–	–	4.E+04	–	–	ET/ /
Hg-193m	1.E−06	1.E−06	–	4.E+04	4.E+04	–	ET/ET/
Hg-193m (Vapor)	–	1.E−07	–	–	6.E+03	–	/St/
Hg-193 (Org)	5.E−06	–	–	1.E+05	–	–	ET/ /
Hg-193	5.E−06	4.E−06	–	1.E+05	1.E+05	–	ET/ET/
Hg-193 (Vapor)	–	5.E−07	–	–	1.E+04	–	/St/
Hg-194 (Org)	2.E−08	–	–	1.E+03	–	–	St/ /
Hg-194	3.E−08	1.E−07	–	1.E+03	3.E+03	–	St/St/
Hg-194 (Vapor)	–	1.E−08	–	–	5.E+02	–	/St/
Hg-195m (Org)	1.E−06	–	–	5.E+04	–	–	ET/ /
Hg-195m	1.E−06	8.E−07	–	5.E+04	3.E+04	–	ET/St/
Hg-195m (Vapor)	–	6.E−08	–	–	2.E+03	–	/St/
Hg-195 (Org)	6.E−06	–	–	2.E+05	–	–	ET/ /
Hg-195	6.E−06	6.E−06	–	2.E+05	2.E+05	–	ET/ET/
Hg-195 (Vapor)	–	4.E−07	–	–	1.E+04	–	/St/
Hg-197m (Org)	1.E−06	–	–	5.E+04	–	–	ET/ /
Hg-197m	1.E−06	8.E−07	–	5.E+04	3.E+04	–	ET/St/
Hg-197m (Vapor)	–	9.E−08	–	–	3.E+03	–	/St/
Hg-197 (Org)	4.E−06	–	–	1.E+05	–	–	ET/ /
Hg-197	4.E−06	2.E−06	–	1.E+05	7.E+04	–	ET/St/
Hg-197 (Vapor)	–	1.E−07	–	–	4.E+03	–	/St/
Hg-199m (Org)	8.E−06	–	–	3.E+05	–	–	ET/ /
Hg-199m	8.E−06	5.E−06	–	3.E+05	1.E+05	–	ET/ET/
Hg-199m (Vapor)	–	3.E−06	–	–	1.E+05	–	/St/
Hg-203 (Org)	7.E−07	–	–	2.E+04	–	–	St/ /
Hg-203	9.E−07	2.E−07	–	3.E+04	1.E+04	–	St/St/
Hg-203 (Vapor)	–	8.E−08	–	–	2.E+03	–	/St/
Tl-194m	5.E−06	–	–	2.E+05	–	–	ET/ /
Tl-194	2.E−05	–	–	8.E+05	–	–	ET/ /
Tl-195	6.E−06	–	–	2.E+05	–	–	ET/ /
Tl-197	8.E−06	–	–	2.E+05	–	–	ET/ /
Tl-198m	2.E−06	–	–	9.E+04	–	–	ET/ /
Tl-198	1.E−06	–	–	5.E+04	–	–	ET/ /
Tl-199	5.E−06	–	–	2.E+05	–	–	ET/ /
Tl-200	8.E−07	–	–	3.E+04	–	–	ET/ /
Tl-201	4.E−06	–	–	1.E+05	–	–	ET/ /
Tl-202	1.E−06	–	–	5.E+04	–	–	ET/ /
Tl-204	9.E−07	–	–	3.E+04	–	–	St/ /
Pb-195m	7.E−06	–	–	2.E+05	–	–	ET/ /
Pb-198	2.E−06	–	–	9.E+04	–	–	ET/ /
Pb-199	4.E−06	–	–	1.E+05	–	–	ET/ /
Pb-200	1.E−06	–	–	4.E+04	–	–	ET/ /
Pb-201	2.E−06	–	–	7.E+04	–	–	ET/ /
Pb-202m	1.E−06	–	–	6.E+04	–	–	ET/ /
Pb-202	4.E−08	–	–	1.E+03	–	–	St/ /
Pb-203	2.E−06	–	–	7.E+04	–	–	ET/ /
Pb-205	9.E−07	–	–	3.E+04	–	–	BS/ /
Pb-209	9.E−06	–	–	3.E+05	–	–	ET/ /
Pb-210	1.E−10	–	–	5.E+00	–	–	BS/ /
Pb-211	4.E−08	–	–	1.E+03	–	–	ET/ /
Pb-212	5.E−09	–	–	2.E+02	–	–	ET/ /
Pb-214	4.E−08	–	–	1.E+03	–	–	ET/ /
Bi-200	5.E−06	4.E−06	–	2.E+05	1.E+05	–	ET/ET/
Bi-201	3.E−06	2.E−06	–	1.E+05	1.E+05	–	ET/ET/
Bi-202	2.E−06	2.E−06	–	9.E+04	9.E+04	–	ET/ET/
Bi-203	7.E−07	7.E−07	–	2.E+04	2.E+04	–	ET/ET/
Bi-205	4.E−07	4.E−07	–	1.E+04	1.E+04	–	ET/ET/
Bi-206	2.E−07	2.E−07	–	9.E+03	8.E+03	–	ET/ET/
Bi-207	4.E−07	1.E−07	–	1.E+04	6.E+03	–	ET/St/
Bi-210m	3.E−09	2.E−10	–	1.E+02	9.E+00	–	K/St/
Bi-210	1.E−07	9.E−09	–	6.E+03	3.E+02	–	K/St/
Bi-212	1.E−08	8.E−09	–	4.E+02	3.E+02	–	ET/ET/
Bi-213	1.E−08	7.E−09	–	4.E+02	2.E+02	–	ET/ET/
Bi-214	1.E−08	1.E−08	–	6.E+02	4.E+02	–	ET/ET/

Radionuclide	Material type [3]			Material type [3]			Stochastic or organ [1]
	μCi/ml			Bq/m [3]			
	F	M	S	F	M	S	(F/M/S)
Po-203	5.E−06	4.E−06	–	1.E+05	1.E+05	–	ET/ET/
Po-205	4.E−06	3.E−06	–	1.E+05	1.E+05	–	ET/ET/
Po-207	1.E−06	1.E−06	–	7.E+04	6.E+04	–	ET/ET/
Po-210	7.E−10	2.E−10	–	2.E+01	9.E+00	–	K/St/
At-207	1.E−06	2.E−07	–	4.E+04	1.E+04	–	St/St/
At-211	7.E−09	5.E−09	–	2.E+02	1.E+02	–	ET/St/
Rn-220 [5]	1.E−08	–	–	6.E+02	–	–	–
Rn-222 [5]	8.E−08	–	–	3.E+03	–	–	–
Fr-222	1.E−08	–	–	3.E+02	–	–	ET/ /
Fr-223	4.E−07	–	–	1.E+04	–	–	St/ /
Ra-223	–	9.E−11	–	–	3.E+00	–	/St/
Ra-224	–	2.E−10	–	–	8.E+00	–	/St/
Ra-225	–	1.E−10	–	–	4.E+00	–	/St/
Ra-226	–	2.E−10	–	–	9.E+00	–	/St/
Ra-227	–	8.E−07	–	–	3.E+04	–	/BS/
Ra-228	–	1.E−10	–	–	5.E+00	–	/BS/
Ac-224	1.E−08	6.E−09	5.E−09	6.E+02	2.E+02	2.E+02	BS/St/St
Ac-225	2.E−10	9.E−11	8.E−11	7.E+00	3.E+00	3.E+00	BS/St/St
Ac-226	1.E−09	6.E−10	5.E−10	4.E+01	2.E+01	2.E+01	ET/St/St
Ac-227	2.E−13	1.E−12	1.E−11	1.E−02	5.E−02	4.E−01	BS/BS/St
Ac-228	6.E−09	3.E−08	4.E−08	2.E+02	1.E+03	1.E+03	BS/BS/St
Th-226	–	4.E−09	4.E−09	–	1.E+02	1.E+02	/ET/ET
Th-227	–	9.E−11	7.E−11	–	3.E+00	2.E+00	/St/St
Th-228	–	2.E−11	2.E−11	–	7.E−01	8.E−01	/BS/St
Th-229	–	2.E−12	1.E−11	–	7.E−02	4.E−01	/BS/St
Th-230	–	3.E−12	4.E−11	–	1.E−01	1.E+00	/BS/BS
Th-231	–	1.E−06	1.E−06	–	5.E+04	5.E+04	/St/St
Th-232	–	3.E−12	4.E−11	–	1.E−01	1.E+00	/BS/BS
Th-234	–	1.E−07	9.E−08	–	3.E+03	3.E+03	/St/St
Pa-227	–	4.E−09	4.E−09	–	1.E+02	1.E+02	/ET/ET
Pa-228	–	1.E−08	1.E−08	–	3.E+02	4.E+02	/BS/St
Pa-230	–	1.E−09	9.E−10	–	4.E+01	3.E+01	/St/St
Pa-231	–	1.E−12	1.E−11	–	4.E−02	4.E−01	/BS/BS
Pa-232	–	1.E−08	1.E−07	–	6.E+02	7.E+03	/BS/BS
Pa-233	–	2.E−07	1.E−07	–	7.E+03	6.E+03	/St/St
Pa-234	–	7.E−07	7.E−07	–	2.E+04	2.E+04	/ET/ET
U-230	6.E−10	5.E−11	4.E−11	2.E+01	2.E+00	1.E+00	K/St/St
U-231	2.E−06	1.E−06	1.E−06	8.E+04	4.E+04	4.E+04	ET/St/St
U-232	5.E−11	1.E−10	2.E−11	2.E+00	4.E+00	7.E−01	BS/St/ET
U-233	4.E−10	2.E−10	7.E−11	1.E+01	9.E+00	2.E+00	BS/St/ET
U-234	5.E−10	2.E−10	7.E−11	1.E+01	9.E+00	2.E+00	BS/St/ET
U-235	5.E−10	3.E−10	8.E−11	1.E+01	1.E+01	3.E+00	BS/St/ET
U-236	5.E−10	2.E−10	7.E−11	1.E+01	1.E+01	2.E+00	BS/St/ET
U-237	1.E−06	3.E−07	3.E−07	4.E+04	1.E+04	1.E+04	ET/St/St
U-238	5.E−10	3.E−10	8.E−11	2.E+01	1.E+01	3.E+00	BS/St/ET
U-239	1.E−05	9.E−06	9.E−06	5.E+05	3.E+05	3.E+05	ET/ET/ET
U-240	1.E−06	7.E−07	6.E−07	5.E+04	2.E+04	2.E+04	ET/St/St
Np-232	–	3.E−06	–	–	1.E+05	–	/BS/
Np-233	–	7.E−05	–	–	2.E+06	–	/ET/
Np-234	–	5.E−07	–	–	2.E+04	–	/ET/
Np-235	–	1.E−06	–	–	4.E+04	–	/BS/
Np-236 (1.E+05 yr)	–	4.E−11	–	–	1.E+00	–	/BS/
Np-236 (22 h)	–	5.E−08	–	–	1.E+03	–	/BS/
Np-237	–	8.E−12	–	–	3.E−01	–	/BS/
Np-238	–	1.E−07	–	–	4.E+03	–	/BS/
Np-239	–	5.E−07	–	–	1.E+04	–	/St/
Np-240	–	2.E−06	–	–	8.E+04	–	/ET/
Pu-234	–	3.E−08	3.E−08	–	1.E+03	1.E+03	/St/St
Pu-235	–	9.E−05	8.E−05	–	3.E+06	3.E+06	/ET/ET
Pu-236	–	1.E−11	7.E−11	–	6.E−01	2.E+00	/BS/St
Pu-237	–	1.E−06	1.E−06	–	7.E+04	6.E+04	/St/St
Pu-238	–	6.E−12	5.E−11	–	2.E−01	1.E+00	/BS/St
Pu-239	–	5.E−12	6.E−11	–	2.E−01	2.E+00	/BS/BS
Pu-240	–	5.E−12	6.E−11	–	2.E−01	2.E+00	/BS/BS
Pu-241	–	2.E−10	2.E−09	–	1.E+01	1.E+02	/BS/BS
Pu-242	–	5.E−12	6.E−11	–	2.E−01	2.E+00	/BS/BS
Pu-243	–	5.E−06	5.E−06	–	1.E+05	1.E+05	/E/E
Pu-244	–	5.E−12	6.E−11	–	2.E−01	2.E+00	/BS/BS
Pu-245	–	9.E−07	8.E−07	–	3.E+04	3.E+04	/St/St
Pu-246	–	8.E−08	8.E−08	–	3.E+03	2.E+03	/St/St

Radionuclide	Material type [3]			Material type [3]			Stochastic or organ [1]
	μCi/ml			Bq/m [3]			(F/M/S)
	F	M	S	F	M	S	
Am-237	–	8.E−06	–	–	3.E+05	–	/ET/
Am-238	–	2.E−06	–	–	9.E+04	–	/BS/
Am-239	–	1.E−06	–	–	6.E+04	–	/ET/
Am-240	–	7.E−07	–	–	2.E+04	–	/ET/
Am-241	–	5.E−12	–	–	1.E−01	–	/BS/
Am-242m	–	5.E−12	–	–	1.E−01	–	/BS/
Am-242	–	4.E−08	–	–	1.E+03	–	/St/
Am-243	–	5.E−12	–	–	1.E−01	–	/BS/
Am-244m	–	3.E−06	–	–	1.E+05	–	/BS/
Am-244	–	1.E−07	–	–	5.E+03	–	/BS/
Am-245	–	5.E−06	–	–	2.E+05	–	/ET/
Am-246m	–	6.E−06	–	–	2.E+05	–	/ET/
Am-246	–	2.E−06	–	–	9.E+04	–	/ET/
Cm-238	–	1.E−07	–	–	4.E+03	–	/St/
Cm-240	–	3.E−10	–	–	7.E+01	–	/St/
Cm-241	–	2.E−08	–	–	8.E+02	–	/St/
Cm-242	–	1.E−10	–	–	5.E+00	–	/St/
Cm-243	–	7.E−12	–	–	2.E−01	–	/BS/
Cm-244	–	9.E−12	–	–	3.E−01	–	/BS/
Cm-245	–	5.E−12	–	–	1.E−01	–	/BS/
Cm-246	–	5.E−12	–	–	1.E−01	–	/BS/
Cm-247	–	5.E−12	–	–	2.E−01	–	/BS/
Cm-248	–	1.E−12	–	–	5.E−02	–	/BS/
Cm-249	–	8.E−06	–	–	3.E+05	–	/ET/
Cm-250	–	2.E−13	–	–	8.E−03	–	/BS/
Bk-245	–	3.E−07	–	–	1.E+04	–	/St/
Bk-246	–	8.E−07	–	–	3.E+04	–	/ET/
Bk-247	–	3.E−12	–	–	1.E−01	–	/BS/
Bk-249	–	1.E−09	–	–	5.E+01	–	/BS/
Bk-250	–	2.E−07	–	–	9.E+03	–	/BS/
Cf-244	–	1.E−08	–	–	5.E+02	–	/ET/
Cf-246	–	1.E−09	–	–	5.E+01	–	/St/
Cf-248	–	5.E−11	–	–	2.E+00	–	/BS/
Cf-249	–	3.E−12	–	–	1.E−01	–	/BS/
Cf-250	–	7.E−12	–	–	2.E−01	–	/BS/
Cf-251	–	3.E−12	–	–	1.E−01	–	/BS/
Cf-252	–	1.E−11	–	–	6.E−01	–	/BS/
Cf-253	–	5.E−10	–	–	2.E+01	–	/St/
Cf-254	–	2.E−11	–	–	8.E−01	–	/BS/
Es-250	–	4.E−07	–	–	1.E+04	–	/BS/
Es-251	–	3.E−07	–	–	1.E+04	–	/St/
Es-253	–	2.E−10	–	–	9.E+00	–	/St/
Es-254m	–	1.E−09	–	–	5.E+01	–	/St/
Es-254	–	6.E−11	–	–	2.E+00	–	/BS/
Fm-252	–	2.E−09	–	–	8.E+01	–	/St/
Fm-253	–	1.E−09	–	–	6.E+01	–	/St/
Fm-254	–	6.E−09	–	–	2.E+02	–	/ET/
Fm-255	–	2.E−09	–	–	8.E+01	–	/St/
Fm-257	–	1.E−10	–	–	4.E+00	–	/St/
Md-257	–	2.E−08	–	–	1.E+03	–	/St/
Md-258	–	1.E−10	–	–	4.E+00	–	/St/

For any single radionuclide not listed above with decay mode other than alpha emission or spontaneous fission and with radioactive half-life greater than two hours, the DAC value shall be 4.E−11 μCi/ml (1 Bq/m³).

For any single radionuclide not listed above that decays by alpha emission or spontaneous fission, or any mixture for which the identity or the concentration of any radionuclide in the mixture is not known, the DAC value shall be 2.E−13 μCi/ml (8.E−03 Bq/m³).

Footnotes for Appendix A

[1] A determination of whether the DACs are controlled by stochastic (St) or nonstochastic (organ) dose, or if they both give the same result (E), for each lung retention class, is given in this column. The key to the organ notation for nonstochastic dose is: BS = Bone surface, ET = Extrathoracic, K = Kidney, L = Liver, and T = Thyroid. A blank indicates that no calculations were performed for the material type shown.

[2] The ICRP identifies these materials as soluble or reactive gases and vapors or highly soluble or reactive gases and vapors. For tritiated water, the inhalation DAC values allow for an additional 50% absorption through the skin, as described in ICRP Publication No. 68, Dose Coefficients for Intakes of Radionuclides by Workers. For elemental tritium, the DAC values include a factor that irradiation from gas within the lungs might increase the dose by 20%.

[3] A dash indicates no values given for this data category.

[4] DAC values derived using hafnium tritide particle and are based on observed activity (*i.e,* only radiation emitted from the particle is considered). DAC values derived using methodology found in Radiological Control Programs for Special Tritium Compounds, DOE–HDBK–1184–2004.

[5] These values are appropriate for protection from radon combined with its short-lived daughters and are based on information given in ICRP Publication 65: Protection Against Radon-222 at Home and at Work and in DOE–STD–1121–98: Internal Dosimetry. The values given are for 100% equilibrium concentration conditions of the radon daughters with the parent. To allow for an actual measured equilibrium concentration or a demonstrated equilibrium concentration, the values given in this table should be multiplied by the ratio (100%/actual %) or (100%/demonstrated %), respectively. Alternatively, the DAC values for Rn-220 and Rn-222 may be replaced by 2.5 WL* and 0.83 WL*, respectively, for appropriate limiting of daughter concentrations.

* A ''Working Level'' (WL) is any combination of short-lived radon daughters, in one liter of air without regard to the degree of equilibrium, that will result in the ultimate emission of 1.3 E+05 MeV of alpha energy.

30. Appendix C to part 835 is revised to read as follows:

Appendix C to Part 835—Derived Air Concentration (DAC) for Workers From External Exposure During Immersion in a Cloud of Airborne Radioactive Material

a. The data presented in appendix C are to be used for controlling occupational exposures in accordance with § 835.209, identifying the need for air monitoring in accordance with § 835.403 and identifying the need for posting of airborne radioactivity areas in accordance with § 835.603(d).

b. The air immersion DAC values shown in this appendix are based on a stochastic dose limit of 5 rems (0.05 Sv) per year. Four columns of information are presented: (1) radionuclide; (2) half-life in units of seconds (s), minutes (min), hours (h), days (d), or years (yr); (3) air immersion DAC in units of μCi/ml; and (4) air immersion DAC in units of Bq/m^3. The data are listed by radionuclide in order of increasing atomic mass. The air immersion DACs were calculated for a continuous, nonshielded exposure via immersion in a semi-infinite cloud of airborne radioactive material. The DACs listed in this appendix may be modified to allow for submersion in a cloud of finite dimensions.

c. The DAC values are given for individual radionuclides. For known mixtures of radionuclides, determine the sum of the ratio of the observed concentration of a particular radionuclide and its corresponding DAC for all radionuclides in the mixture. If this sum exceeds unity (1), then the DAC has been exceeded. For unknown radionuclides, the most restrictive DAC (lowest value) for those isotopes not known to be absent shall be used.

Air Immersion DASC			
Radionuclide	Half-Life	(μCi/ml)	(Bq/m^3
Ar-37	35.02 d	1.E+00	4.E+10
Ar-39	269 yr	4.E−04	1.E+07
Ar-41	1.827 h	1.E−06	3.E+04
Kr-74	11.5 min	1.E−06	4.E+04
Kr-76	14.8 h	3.E−06	1.E+05
Kr-77	74.7 h	1.E−06	5.E+04
Kr-79	35.04 h	5.E−06	2.E+05
Kr-81	2.1E+05 yr	2.E−04	9.E+06
Kr-83m	1.83 h	2.E−02	9.E+08
Kr-85	10.72 yr	2.E−04	9.E+06
Kr-85m	4.48 h	9.E−06	3.E+05
Kr-87	76.3 min	1.E−06	5.E+04
Kr-88	2.84 h	6.E−07	2.E+04
Xe-120	40.0 min	3.E−06	1.E+05
Xe-121	40.1 min	7.E−07	2.E+04
Xe-122	20.1 h	2.E−05	1.E+06
Xe-123	2.14 h	2.E−06	8.E+04
Xe-125	16.8 h	5.E−06	2.E+05
Xe-127	36.406 d	5.E−06	2.E+05
Xe-129m	8.89 d	6.E−05	2.E+06
Xe-131m	11.84 d	1.E−04	6.E+06
Xe-133	5.245 d	4.E−05	1.E+06
Xe-133m	2.19 d	4.E−05	1.E+06
Xe-135	9.11 h	5.E−06	2.E+05
Xe-135m	15.36 min	3.E−06	1.E+05
Xe-138	14.13 min	1.E−06	4.E+04

For any single radionuclide not listed above with decay mode other than alpha emission or spontaneous fission and with radioactive half-life less than two hours, the DAC value shall be 6.E−06 μCi/ml (2.E+04 Bq/m^3).

31. Appendix D to part 835 is revised to read as follows:

Appendix D to Part 835—Surface Contamination Values

The data presented in appendix D are to be used in identifying and posting contamination and high contamination areas in accordance with § 835.603(e) and (f) and identifying the need for surface contamination monitoring and control in accordance with § 835.1101 and 1102.

SURFACE CONTAMINATION VALUES[1] IN DPM/100 CM^2

Radionuclide	Removable [2 4]	Total (fixed + removable) [2 3]
U-nat, U–235, U–238, and associated decay products	[7] 1,000	[7] 5,000 products
Transuranics, Ra-226, Ra-228, Th-230, Th-228, Pa-231, Ac-227, I–125, I–129	20	500

SURFACE CONTAMINATION VALUES[1] IN DPM/100 CM^2—Continued

Radionuclide	Removable [2 4]	Total (fixed + removable) [2 3]
Th-nat, Th-232, Sr-90 (including mixed fission products where the Sr-90 fraction is 90 percent or more of the total activity), Ra-223, Ra-224, U–232, I–126, I-131, I–133	200	1,000
Mixed fission products where the Sr-90 fraction is more than 50 percent but less than 90 percent of the total activity	600	3,000
Beta-gamma emitters (nuclides with decay modes other than alpha emission or spontaneous fission) except Sr-90 and others noted above [5]	1,000	5,000
Tritium and tritiated compounds [6]	10,000	N/A

[1] The values in this appendix, with the exception noted in footnote 6 below, apply to radioactive contamination deposited on, but not incorporated into the interior or matrix of, the contaminated item. Where surface contamination by both alpha- and beta-gamma-emitting nuclides exists, the limits established for alpha- and beta-gamma-emitting nuclides apply independently.

[2] As used in this table, dpm (disintegrations per minute) means the rate of emission by radioactive material as determined by correcting the counts per minute observed by an appropriate detector for background, efficiency, and geometric factors associated with the instrumentation.

[3] The levels may be averaged over one square meter provided the maximum surface activity in any area of 100 cm^2 is less than three times the value specified. For purposes of averaging, any square meter of surface shall be considered to be above the surface contamination value if: (1) From measurements of a representative number of sections it is determined that the average contamination level exceeds the applicable value; or (2) it is determined that the sum of the activity of all isolated spots or particles in any 100 cm^2 area exceeds three times the applicable value.

[4] The amount of removable radioactive material per 100 cm^2 of surface area should be determined by swiping the area with dry filter or soft absorbent paper, applying moderate pressure, and then assessing the amount of radioactive material on the swipe with an appropriate instrument of known efficiency. (Note—The use of dry material may not be appropriate for tritium.) When removable contamination on objects of surface area less than 100 cm^2 is determined, the activity per unit area shall be based on the actual area and the entire surface shall be wiped. It is not necessary to use swiping techniques to measure removable contamination levels if direct scan surveys indicate that the total residual surface contamination levels are within the limits for removable contamination.

[5] This category of radionuclides includes mixed fission products where the Sr-90 fraction is 50 percent or less of the total activity.

[6] Tritium contamination may diffuse into the volume or matrix of materials. Evaluation of surface contamination shall consider the extent to which such contamination may migrate to the surface in order to ensure the surface contamination value provided in this appendix is not exceeded. Once this contamination migrates to the surface, it may be removable, not fixed; therefore, a ''Total'' value does not apply.

[7] These limits only apply to the alpha emitters within the respective decay series.

32. Appendix E to part 835 is revised to read as follows:

Appendix E to Part 835—Values for Establishing Sealed Radioactive Source Accountability and Radioactive Material Posting and Labeling Requirements

The data presented in appendix E are to be used for identifying accountable sealed radioactive sources and radioactive material areas as those terms are defined at § 835.2(a), establishing the need for radioactive material area posting in accordance with § 835.603(g), and establishing the need for radioactive material labeling in accordance with § 835.605.

Nuclide	Activity (μCi)
H-3	1.5E+08
Be-7	3.1E+03
Be-10	1.4E+05
C-14	4.6E+06
Na-22	1.9E+01
Al-26	1.5E+01
Si-32	4.9E+04
S-35	2.4E+06
Cl-36	5.2E+05
K-40	2.7E+02
Ca-41	9.3E+06
Ti-44	1.5E+02
Ca-45	1.1E+06
Sc-46	6.2E+01
V-49	1.0E+08
Mn-53	7.5E+07
Mn-54	6.5E+01
Fe-55	2.9E+06
Fe-59	1.9E+02
Fe-60	8.1E+03
Co-56	3.9E+01
Co-57	2.3E+02
Co-58	1.3E+02
Co-60	1.7E+01
Ni-59	3.2E+06
Ni-63	1.3E+06
Zn-65	1.1E+02
Ge-68	5.6E+02
As-73	5.3E+02
Se-75	6.3E+01
Se-79	8.7E+05
Rb-83	9.1E+01
Rb-84	2.0E+02
Sr-85	1.2E+02
Sr-89	4.8E+05
Sr-90	3.5E+04
Y-88	3.3E+01
Y-91	5.0E+04
Zr-88	1.1E+02
Zr-93	9.3E+04
Zr-95	1.9E+02
Nb-91	6.9E+01
Nb-91m	3.6E+02
Nb-92	1.8E+01
Nb-93m	4.4E+02
Nb-94	2.3E+01
Nb-95	3.4E+02
Mo-93	7.7E+01
Tc-95m	1.3E+02
Tc-97	8.1E+01
Tc-97m	3.5E+02
Tc-98	2.5E+01
Tc-99	8.4E+05
Rh-101	8.7E+05
Rh-102	3.0E+05
Rh-102m	6.4E+05
Ru-103	4.4E+02
Ru-106	2.5E+02
Ag-105	3.3E+06
Ag-108m	1.8E+01
Ag-110m	2.2E+01
Pd-107	9.3E+06
Cd-109	1.6E+02
Cd-113m	2.0E+04
Cd-115m	1.0E+04
Sn-113	3.1E+02
Sn-119m	3.3E+02
Sn-121m	8.1E+05
Sn-123	1.3E+04
Sn-126	1.8E+02
In-114m	7.7E+02
Te-121m	1.8E+02
Te-123m	2.8E+02
Te-125m	4.4E+02
Te-127m	8.0E+02
Te-129m	2.3E+03
Sb-124	9.1E+01
Sb-125	6.7E+01
I-125	3.5E+02
I-129	1.8E+02
Ba-133	5.1E+01
Cs-134	2.6E+01
Cs-135	1.3E+06
Cs-137	6.0E+01
La-137	2.7E+05
Ce-139	2.4E+02
Ce-141	2.4E+03
Ce-144	1.4E+03
Pm-143	1.3E+02
Pm-144	2.9E+01
Pm-145	2.6E+02
Pm-146	4.4E+01
Pm-147	7.7E+05
Pm-148m	1.0E+02
Sm-145	2.4E+06
Sm-146	4.0E+02
Sm-151	2.5E+05
Gd-146	5.1E+05

Nuclide	Activity (μCi)
Gd-148	9.0E+01
Gd-151	2.9E+06
Gd-153	2.1E+02
Eu-148	1.1E+06
Eu-149	1.1E+07
Eu-152	3.1E+01
Eu-154	3.1E+01
Eu-155	3.6E+02
Tb-157	2.5E+03
Tb-158	9.0E+04
Tb-160	1.2E+02
Dy-159	1.0E+07
Ho-166m	2.1E+01
Yb-169	5.5E+02
Tm-170	8.4E+03
Tm-171	2.8E+04
Hf-172	7.3E+04
Hf-175	3.0E+06
Hf-178m	8.7E+03
Hf-181	3.4E+02
Hf-182	7.5E+03
Lu-173	1.8E+06
Lu-174	9.3E+05
Lu-174m	1.0E+06
Lu-177m	5.8E+01
Ta-179	9.3E+06
Ta-182	7.3E+01
W-181	1.0E+03
W-185	3.9E+06
W-188	6.3E+04
Re-183	5.3E+02
Re-184	2.6E+02
Re-184m	1.5E+02
Re-186m	3.4E+05
Os-185	1.3E+02
Os-194	6.4E+04
Ir-192	1.3E+02
Ir-192m	1.4E+05
Ir-194m	2.7E+01
Pt-193	8.7E+07
Hg-194	5.2E+04
Hg-203	4.9E+02
Au-195	4.8E+02
Pb-202	1.9E+05

Nuclide	Activity (μCi)
Pb-205	9.0E+01
Pb-210	9.2E+01
Tl-204	2.2E+04
Bi-207	1.7E+01
Bi-208	1.5E+01
Bi-210m	1.2E+03
Po-209	6.3E+03
Po-210	1.2E+03
Ra-226	2.2E+02
Ra-228	1.5E+03
Ac-227	4.2E+00
Th-228	8.4E+01
Th-229	3.1E+01
Th-230	5.4E+00
Th-232	9.3E+01
Pa-231	3.0E+01
U-232	1.0E+02
U-233	3.9E+02
U-234	2.9E+02
U-235	6.7E+01
U-236	3.1E+02
U-238	3.5E+02
Np-235	1.1E+02
Np-236	2.1E+01
Np-237	4.9E+01
Pu-236	2.0E+02
Pu-237	3.3E+02
Pu-238	9.0E+01
Pu-239	8.4E+01
Pu-240	8.4E+01
Pu-241	4.6E+03
Pu-242	8.7E+01
Pu-244	9.0E+01
Am-241	7.2E+01
Am-242m	1.1E+02
Am-243	7.3E+01
Cm-241	1.0E+05
Cm-242	6.2E+02
Cm-243	4.8E+01
Cm-244	1.5E+02
Cm-245	5.0E+01
Cm-246	1.0E+02
Cm-247	8.5E+01
Cm-248	2.8E+01

Nuclide	Activity (μCi)
Cm-250	5.4E+00
Bk-247	6.0E+01
Bk-249	2.7E+04
Cf-248	4.4E+02
Cf-249	5.5E+01
Cf-250	1.2E+02
Cf-251	5.3E+01
Cf-252	5.2E+00
Cf-254	1.2E+02
Es-254	6.3E+01
Es-255	8.8E+03
Fm-257	5.1E+02
Md-258	6.1E+02

Any alpha emitting radionuclide not listed above and mixtures of alpha emitters of unknown composition have a value of 10 μCi.

Except as discussed below, any radionuclide other than alpha emitting radionuclides not listed above and mixtures of beta emitters of unknown composition have a value of 100 μCi.

Any type of tritiated particulate or organically–bound tritiated compound has a value of 10 Ci.

Note: Where there is involved a combination of radionuclides in known amounts, derive the value for the combination as follows: determine, for each radionuclide in the combination, the ratio between the quantity present in the combination and the value otherwise established for the specific radionuclide when not in combination. If the sum of such ratios for all radionuclides in the combination exceeds unity (1), then the accountability criterion has been exceeded.

[FR Doc. 06–6579 Filed 8–9–06; 8:45 am]

BILLING CODE 6450–01–P

Federal Register

Thursday,
August 10, 2006

Part V

Department of Justice

Office of Justice Programs

28 CFR Part 32

Public Safety Officers' Benefits Program; Final Rule

DEPARTMENT OF JUSTICE

Office of Justice Programs

28 CFR Part 32

[Docket No.: OJP (OJP)–1333]

RIN 1121–AA56

Public Safety Officers' Benefits Program

AGENCY: Office of Justice Programs, Justice.

ACTION: Final rule

SUMMARY: The Bureau of Justice Assistance (''BJA''), Office of Justice Programs, Department of Justice, published the proposed rule for the Public Safety Officers Benefits (''PSOB'') Program on July 26, 2005, 70 FR 43,078. During the comment period, BJA received comments on its proposed rule from numerous parties. After further review of the proposed rule and very recent amendments to the underlying statute, and careful consideration and analysis of all comments, BJA made amendments that are incorporated into this final rule.

DATES: Effective September 11, 2006.

FOR FURTHER INFORMATION CONTACT: Hope Janke, Counsel to the Director, Bureau of Justice Assistance, at (202) 514–6278, or toll-free at 1 (888) 744–6513.

SUPPLEMENTARY INFORMATION: BJA published the proposed rule for the PSOB Program on July 26, 2005. During the comment period, BJA received comments on its proposed rule from a number of interested parties: National police and fire associations; municipal police, fire, and rescue departments; PSOB hearing officers; survivors of fallen public safety officers; and individual concerned citizens. Additionally, Members of Congress commented on the proposal. Many of the comments related to the provisions implementing the Hometown Heroes Survivors Benefits Act of 2003 (''Hometown Heroes Act''), Pub. L. 108–182. Many other comments related to various definitions contained in the proposed rule. One commentator expressed approval of the proposed rule for implementing the PSOB Act instead of merely restating or rephrasing the statutory language; BJA has continued this approach in the final rule. After careful consideration and analysis of all comments received, BJA made amendments that are incorporated into this final rule. In addition, the final rule contains some clarifying changes to provisions in the proposed rule where there were some previously unnoticed ambiguities, or where the language was more complex than necessary; also, the final rule in places changes proposed language that was unintentionally more restrictive than the statute (*e.g.*, the definitions of ''parent-child relationship,'' ''adopted child,'' ''intentional misconduct,'' and several education-benefits provisions). A discussion of the comments and changes follows.

The first part of the discussion generally describes the structure and background of the PSOB Program and aspects of the history of its administration by BJA. The second part of the discussion covers the recent changes to the PSOB Act contained in Public Law 109–162 (''DOJ Reauthorization Act''). Two days after the closing of the comment period for the proposed rule, certain amendments to the PSOB Act were passed by the House of Representatives. Because enactment of these amendments into law appeared to be likely before the end of 2005, BJA deemed it prudent to wait before publishing the final rule. In fact, the amendments (with other changes to the PSOB statute), contained in the bill that became the DOJ Reauthorization Act, were passed by the Senate on December 17th and by the House of Representatives on the following day, and were signed into law by the President on January 5, 2006. Accordingly, the final rule contains several clarifying and conforming changes occasioned by these statutory amendments. The third part of the discussion addresses the comments received by BJA that relate to the proposed provisions implementing the Hometown Heroes Act, and explains the changes being made in the final rule in response to those comments. The fourth part is a specific discussion of the terms ''line of duty'' and ''authorized commuting,'' in response to a number of comments requesting clarification on these definitions. The last part of the discussion addresses the remainder of the comments in a section-by-section analysis, indicating where changes to provisions were made, or (as the case may be) where BJA determined no changes to be necessary.

As a preliminary matter, BJA wishes to correct two citations made on the same page, 70 FR at 43,080, of the preamble to the proposed rule: (1) In the discussion of the authority of the publication, *Legal Interpretations of the Public Safety Officers' Benefits Act*, and the reliance of courts thereon, one decision mistakenly was included in the list of citations, which should have read: ''*E.g., Chacon* v. *United States*, 48 F.3d 508 (Fed. Cir. 1995), *aff'g* 32 Fed. Cl. at 687–688; *Durco*, 14 Cl. Ct. at 427; *Tafoya* v. *United States*, 8 Cl. Ct. 256, 262–265 (Cl. Ct. 1985); *North*, 555 F.Supp. at 386; *Morrow*, 647 F.2d at 1101–1102.''; and (2) in the discussion of jurisdictional cases that had nullified the rule of the jurisdictional holding of *Russell*, 637 F.2d at 1256–1260, the list of citations, from which two decisions inadvertently were omitted, should have read: ''*Davis* v. *United States*, 169 F.3d 1196 (9th Cir. 1999); *Wydra* v. *United States*, 722 F.2d 834 (D.C. Cir. 1983); *Tafoya* v. *Dep't of Justice*, 748 F.2d 1389 (10th Cir. 1984); *see also, e.g., Durco* v. *LEAA*, No. 86–3660, order (3d Cir., Dec. 24, 1986); *Russell* v. *Law Enforcement Assistance Administration*, 637 F.2d 354 (5th Cir. Unit A 1981); *Lankford* v. *Law Enforcement Assistance Administration*, 620 F.2d 35 (4th Cir. 1980); *LaBare* v. *United States*, No. C04–4974 MHP, slip op. at 3–5 (N.D. Ca. Mar. 10, 2005); *Ramos-Vélez* v. *United States*, 826 F.Supp. 615 (D. P.R. 1993); *Thomas* v. *United States*, No. 80–6511–Civ–ALH, order (S.D. Fl., Mar. 16, 1981).''

I. General Background

An individual serving a public agency does not have an automatic or freestanding statutory right to a PSOB Act death or disability benefit. In order to qualify for the PSOB Act death or disability benefit, rather, a claimant must demonstrate (and BJA must ''determine[]'') under ''regulations issued pursuant to'' the Act, ''that a public safety officer has died as the direct and proximate result of a personal injury sustained in the line of duty,'' 42 U.S.C. 3796(a), or ''that a public safety officer has become permanently and totally disabled as the direct result of a catastrophic injury sustained in the line of duty,'' *id.* 3796(b). Thus, in death and disability cases, the Act requires BJA to determine two distinct issues: First, the status of the individual—whether he was a public safety officer; and second, the circumstances of his death or disability—whether it was directly and proximately caused by a line of duty injury.

The PSOB Act is an effort to ''balance[] 'compensating for inadequate state and local benefits [with] budgetary considerations and * * * fears that federal assumption of full responsibility for compensating the families of deceased officers would weaken the federal system and allow states and municipalities to evade their responsibility.' '' *Chacon* v. *United States*, 32 Fed. Cl. 684, 687 (1995) (citing *Russell* v. *Law Enforcement Assistance Admin.* 637 F.2d 1255, 1261 (9th Cir. 1980)), *aff'd*, 48 F.3d 508 (Fed.

Cir.); *see Rose* v. *Arkansas State Police*, 479 U.S. 1 (1986) (per curiam); *Holstine* v. *Dep't of Justice*, No. 80–7477, slip op. at 2 (9th Cir., Aug. 4, 1982), 688 F.2d 845, 846 (table). To this end (and sharply unlike the case with PSOB Act education benefits, which the law provides that the Attorney General ''shall provide,'' 42 U.S.C. 3796d–1(a)(1), or ''shall approve,'' *id.* 3796d–2(b)), the Act expressly entrusts vast administrative and interpretive authority to BJA in defining the very right to a death or disability benefit—the benefit shall be paid only when ''the Bureau of Justice Assistance * * * determines, under [its own] regulations that a public safety officer has died as the direct and proximate result of a personal injury sustained in the line of duty,'' *id.* 3796(a), or ''that a public safety officer has become permanently and totally disabled as the direct result of a catastrophic injury sustained in the line of duty,'' *id.* 3796(b). The Act—in at least four places—expressly authorizes BJA to issue regulations, *id.* 3796(a) & (b), 3796c(a), and 3796d–3(a), and goes on to provide that the regulations issued by BJA ''will be determinative of conflict of laws issues arising under'' the Act, and that, although BJA ''may utilize such administrative and investigative assistance as may be available from State and local agencies[, r]esponsibility for making final determinations shall rest with the Bureau.'' *Id.* 3796c(a) & (b). Clearly, the legislative intention is for BJA to exercise its discretion and expertise to administer the Act and to define and ''determine[,]'' consistent with the Act as a whole, the circumstances under which death and disability benefits should be extended. *See, e.g., Porter* v. *United States*, 64 Fed. Cl. 143 (2005), *aff'd*, No. 05–5105, order (Fed. Cir., Apr. 6, 2006).

Carrying out this legislative intention has been challenging; since the PSOB Act's enactment into law, Public Law 94–430, 90 Stat. 1346, 1346–1348 (1976), the Act has been amended no fewer than eighteen times, sometimes creating overlapping statutory structures.[1] These myriad amendments (or, rather, some of them) have allowed some ambiguities and imprecision in the Act that BJA has had to work through in the thousands of individual PSOB Act benefit claims it has processed in the thirty years since the program began. For example:

(1) As originally enacted, the PSOB Act provided only for death benefits to the statutorily-designated survivors (including any ''child'') of a fallen public safety officer. *See* 42 U.S.C. 3796(a). For this reason, it is unremarkable that the Act should define ''child'' to mean ''any natural, illegitimate, adopted, or posthumous child or stepchild of a deceased public safety officer who, at the time of the public safety officer's death, is * * * 18 years of age or under.'' *See id.* 3796b(3)(i). Analytically speaking, this definition was undisturbed when the Act subsequently was amended to provide benefits to disabled public safety officers. *See id.* 3796(b). But when—still later—the Act was further amended to provide education benefits to any ''dependent * * * child'' of a deceased or disabled public safety officer, *see id.* 3796d–1(a)(1), a patent conflict manifested itself: Under the literal terms of the Act, by definition no one could be a ''child'' at all, unless his public safety officer parent were dead, but the Act also clearly commanded that a ''child of any eligible public safety officer''—which includes any living disabled officer—was entitled to the Act's education benefits. Exercising the considerable interpretative authority given to it by statute, BJA has understood the education-benefits provision to be in the nature of a *pro tanto* amendment to the PSOB Act's definition of ''child'' and thus consistently has construed that definition to apply only to the factual situation it obviously contemplates. *See, e.g.*, 70 FR at 43084 (proposed definition of ''Child,'' for codification at 28 CFR 32.3).

(2) The PSOB Act contains several ''disentitling'' provisions, relating to the actions or status of the officer himself, that prevent payment of benefits under various circumstances, such as the suicide, intentional misconduct, voluntary intoxication, or gross negligence of the officer. *See* 42 U.S.C. 3796a(1)—(3). Another ''disentitling'' provision, relating to the actions or status of a potential beneficiary (as opposed to the actions or status of the officer himself), operates, for example, to prevent payment of benefits to an officer's murderer. *See id.* 3796a(4) (2006). Yet another ''disentitling'' provision, added to the Act in 1984, forbade BJA from paying a benefit ''to any individual employed in a capacity other than a civilian capacity.'' *See id.* 3796a(5) as in effect on Jan. 4, 2006. At first glance, this appears to be an unremarkable provision against double-payment of benefits: When military death or disability benefits are payable, civilian benefits are not. The literal text of the provision, however, accomplishes this result only in the case of a disabled officer whose employment was other than in a civilian capacity (*e.g.*, a disabled military police officer); but if the officer is dead, payments, if any, must go ''to'' his statutory survivors—thus putting *their* actions or status (not the officer's) at issue. Following the literal text of the provision, therefore, would have meant that if a police officer were to die in the line of duty survived by a husband who is a Captain on active duty in the Reserves, the husband could not be paid a PSOB Act death benefit. Mindful of the canon that a statute may be construed so as to avoid plainly-absurd results entailed in a literal reading,[2] BJA has understood this provision within the whole context of the Act to prohibit payment only when the public safety officer himself was employed in a capacity other than a civilian capacity. *See, e.g.*, 70 FR at 43087 (for codification at 28 CFR 32.6(a)) (''No payment shall be made with respect to any public safety officer who is an individual employed as described in the Act, at 42 U.S.C. 3796a(5).''). The reasonability of BJA's interpretation was entirely vindicated on January 5, 2006, when the President signed into law the DOJ Reauthorization Act, amending 42 U.S.C. 3796a(5), which (now) forbids BJA from paying a benefit ''with respect to any individual employed in a capacity other than a

[1] *E.g.*, Pub. L. 96–157, sec. 2, 93 Stat. 1167, 1219 (1979); Pub. L. 98–411, sec. 204, 98 Stat. 1545, 1561 (1984); Pub. L. 98–473, secs. 609F, 609Z, 98 Stat. 1837, 2098, 2107 (1984); Pub. L. 99–500, sec. 101(b) (sec. 207), 100 Stat. 1783, 1783–56 (1986); Pub. L. 99–591, sec. 101(b) (sec. 207), 100 Stat. 3341, 3341 56 (1986); Pub. L. 100–690, secs. 6105, 6106, 102 Stat. 4181, 4341 (1988); Pub. L. 101–647, secs. 1301–1303, 104 Stat. 4789, 4834 (1990); Pub. L. 102–520, 106 Stat. 3402 (1992); Pub. L. 103–322, sec. 330001(e), 108 Stat. 1796, 2138 (1994); Pub. L. 104–238, 110 Stat. 3114 (1996); Pub. L. 105–180, 112 Stat. 511 (1998); Pub. L. 105–390, 112 Stat. 3495 (1998); Pub. L. 106–276, 114 Stat. 812 (2000); Pub. L. 106–390, sec. 305, 114 Stat. 1552, 1573 (2000); Pub. L. 107–56, sec. 613, 115 Stat. 272, 369 (2001); Pub. L. 107–196, 116 Stat. 719 (2002); Pub. L. 108–182, 117 Stat. 2649 (2003); Pub. L. 109–162, sec. 1164, 119 Stat. 2960, 3120 (2006); *see also* Pub. L. 107–37, 115 Stat. 219 (2001); Pub. L. 107–56, secs. 611, 612, 115 Stat. at 369.

[2] It is well established that—''[w]here the literal reading of a statutory term would 'compel an odd result,' we must search for other evidence of congressional intent to lend the term its proper scope. * * * [e]ven though, as Judge Learned Hand said, 'the words used, even in their literal sense, are the primary, and ordinarily the most reliable, source of interpreting the meaning of any writing'. * * *'' *Public Citizen* v. *Department of Justice*, 491 U.S. 440, 454 (1989) (Brennan, J.) (quoting first *Green* v. *Bock Laundry Machine*, 490 U.S. 504, 509 (1989) and second *Cabell* v. *Markham*, 148 F.2d 737, 739 (2nd Cir. 1945), *aff'd*, 326 U.S. 404 (1945)); 491 U.S. at 469—474 (Kennedy, J., concurring); *Hawaii* v. *Mankichi*, 190 U.S. 197, 212 (1903); *Church of the Holy Trinity* v. *United States*, 143 U.S. 457, 459 (1892).

civilian capacity.'' Pub. L. 109–162, sec. 1164, 119 Stat. at 3120.

(3) The PSOB Act's definition of ''law enforcement officer'' has occasioned considerable difficulty. Prior to 1984, a ''law enforcement officer'' was defined as ''a person involved in crime and juvenile delinquency control or reduction, or enforcement of the criminal laws. This includes, but is not limited to, police, corrections, probation, parole, and judicial officers.'' That ''control or reduction'' applied to ''crime'' and to ''juvenile delinquency'' was clear enough on the face of the statute, but there was considerable debate in the field as to whether ''enforcement of the criminal laws'' included enforcement of the juvenile delinquency laws, which debate eventually led to an amendment that struck the word ''criminal'' so as to enable the ''enforcement'' unquestionably to apply also to ''juvenile delinquency.'' *See* 42 U.S.C. 3796b(5) as in effect on Jan. 4, 2006 (''an individual involved in crime and juvenile delinquency control or reduction, or enforcement of the laws, including, but not limited to, police, corrections, probation, parole, and judicial officers''). Consistent, however, with the ordinary sense of the term ''law enforcement officer'' [3] and applying the traditional interpretive canon *noscitur a sociis* [4] to the statutory definition of the term, BJA has understood ''law enforcement officer'' not to encompass those who have no criminal law-enforcement authority or enforce only civil laws. *See, e.g.*, 70 FR at 43084 (proposed definition of ''enforcement of the laws,'' to be codified at 28 CFR 32.3 (''Enforcement of the laws means enforcement of the criminal law.''; the proposed definition of ''Criminal law'' clarifying that juvenile delinquency is covered)). Notwithstanding the interpretive authority granted to BJA by the Act, the absence of the word ''criminal'' from the statutory phrase ''enforcement of the laws'' unfortunately provided the predicate for some, including at least two judges, incorrectly to conclude that the PSOB Act death benefit may be paid with respect to individuals who had no criminal law-enforcement authority, but enforced only civil laws. *See Hawkins* v. *United States*, 68 Fed. Cl. 74 (2005), *appeal filed*, No. 06–5013 (Fed. Cir., Oct. 31, 2005); *Cassella* v. *United States*, 68 Fed. Cl. 189 (2005), *appeal filed*, No. 06–5035 (Fed. Cir., Dec. 19, 2005). Confirming the correctness of BJA's understanding of the statute, however (and directly contrary to these erroneous judicial rulings), the January 5, 2006, clarifying amendments to the PSOB Act changed 42 U.S.C. 3796a(5) to define ''law enforcement officer'' as ''an individual involved in crime and juvenile delinquency control or reduction, or enforcement of the criminal laws (including juvenile delinquency), including, but not limited to, police, corrections, probation, parole, and judicial officers.''

(4) More than once, the text of the PSOB Act has generated confusion by elaborating upon a specific term in one provision, only to use a short-hand version of the same term in another. *Compare, e.g.*, 42 U.S.C. 3796(b) (''permanently and totally disabled'') *and id.* 3796d–1(a)(1)(B) (''totally and permanently disabling injury'' (emphasis added)) *with id.* 3796d(2) (referring only to ''total disability''). Prior to January 5, 2006, the Act referred in one place to an ''officially recognized or designated * * * public employee member of a rescue squad or ambulance crew,'' *id.* 3796b(4) (emphasis added), and in another place merely to ''a member of a rescue squad or ambulance crew,'' *id.* 3796b(8)(A).[5] Following the traditional rules that the starting point of statutory interpretation must be the language of the statute itself and that every word of a statute should be given effect, if possible, and none rendered superfluous,[6] in the exercise of the discretion granted to it by the PSOB Act, BJA resolved the ambiguity created by these different textual formulations contained in the Act by interpreting the briefer term as a short-hand expression of the longer one; *i.e.*, by construing the statute to require that ''rescue squad or ambulance crew member[s]'' be ''officially recognized or designated * * * public employee member[s].'' *See, e.g.*, 70 FR 43,086 (proposed definition of ''Rescue squad or ambulance crew member,'' for codification at 28 CFR 32.3). Unfortunately, and despite the considerable interpretive authority granted to BJA by the Act (to say nothing of the deference owed to BJA under the rule in *Chevron U.S.A.* v. *Natural Resources Defense Council*, 467 U.S. 837 (1984)), at least one judge has ignored BJA's longstanding construction and erroneously concluded that the PSOB Act death benefit may be paid with respect to an individual (emergency medical technician trainee) who was neither ''officially recognized or designated'' nor a ''public employee member'' of a rescue squad or ambulance crew. *Hillensbeck* v. *United States*, 68 Fed. Cl. 62 (2005); *Hillensbeck* v. *United States*, 69 Fed. Cl. 369 (2006). Notwithstanding this judicial ruling, the reasonability of BJA's construction of the statute (and the error of the court's conclusion) was strongly underscored by the January 5, 2006, clarifying amendments to the PSOB Act, now codified at 42 U.S.C. 3796a(7), which explicitly endorse BJA's position by adding an express definition of ''member of a rescue squad or ambulance crew'' that requires that they be ''officially recognized or designated public employee member[s].''

Given the foregoing history of careful construction of the statute in the context of repeated statutory amendment and the handling of thousands of claims, it is not surprising that Representative Lamar Smith made the following observation on the floor of the House of Representatives in reference to DOJ Reauthorization Act section 1162 (entitled ''Clarification of Persons Eligible for Benefits under the Public Safety Officers' Death Benefit Programs''), which made these most-recent amendments to the PSOB Act:

[3] In several places, the Act uses key terms in their ordinary sense, with the statutory ''definition'' providing only points of clarification as to detail. *See, e.g.*, 42 U.S.C. 3796b(2) (2006) (''‘chaplain' includes any individual serving as an officially recognized or designated member of a legally organized volunteer fire department . * * *''). To read this ''definition'' literally would be tantamount to a suggestion that the provision makes the fire chief a ''chaplain.'' To avoid this ridiculous and counter-intuitive suggestion, BJA understands that the legislative intention is to apply the ordinary meaning of the word, supplemented by the terms of the statutory ''definition.'' *See, e.g.*, 70 FR at 43084 (proposed definition of ''Chaplain,'' for codification at 28 CFR 32.3) (''Chaplain means a clergyman, or other individual trained in pastoral counseling, who meets the definition provided in the Act, at 42 U.S.C. 3796b(2).'').

[4] *See, e.g., Hibbs* v. *Winn*, 542 U.S. 88 (2004); *Gutierrez* v. *Ada*, 528 U.S. 250, 255 (2000) (''Words and people are known by their companions.'').

[5] For approximately fourteen years the literal text of the statute required that the public safety officer serve a public agency ''as a * * * rescue squad or ambulance crew''; this patent error was remedied in 2000 when the Act was amended to permit an individual member of a squad or crew to be covered. *See supra* footnote 3. It may go without saying that, during those fourteen years, BJA (relying in significant part on its statutory interpretive authority and on the canon against absurd results) did not apply these provisions of the Act literally—as forbidding any but one-man squads or crews to be eligible for PSOB benefits.

[6] *See, e.g., Lewis* v. *United States*, 445 U.S. 55, 60 (1980); *Crandon* v. *United States*, 494 U.S. 152, 171 (1990) (Scalia, J., concurring in the judgment); *see generally Consolidated Rail Corp.* v. *United States,* 896 F.2d 574, 578–79 (D.C. Cir. 1990) (per Ginsburg, J.) (''For we must never forget that it is a statute we are expounding, and it is the intention of the drafters, as expressed in the words they used, that we must heed. * * * '[E]ffect must be given, if possible, to every word, clause and sentence of a statute * * * so that no part will be inoperative or superfluous, void or insignificant.' '' (quoting *National Ass'n of Recycling Indus.* v. *ICC*, 660 F.2d 795, 799 (D.C. Cir. 1981)).

The Bureau of Justice Assistance has acquired considerable expertise in the administration of the Public Safety Officers' Benefits Act since its enactment in 1976, and courts have properly accorded the Bureau's interpretations of the Act great deference.

Among other things, H.R. 3402 clarifies statutory provisions relating to the requirements that ''rescue squad or ambulance crew'' members be public employees, and that ''enforcement of the laws'' refers to the criminal laws, by making the text conform more clearly to the legislative intention, which has been correctly reflected in the Bureau's longstanding interpretation of the Act.

These clarifying changes should not be understood to effect any substantive change in the Act, as interpreted by the Bureau.

163 Cong. Rec. H12,125 (daily ed., Dec. 17, 2005). These remarks—from a member of the House Judiciary Committee (which reported the bill)—bear strong witness to the reasonability and soundness of BJA's construction of the PSOB Act.

II. Recent Amendments to the PSOB Act

As discussed above, the DOJ Reauthorization Act made several clarifying and other changes to the PSOB Act. The term ''member of a rescue squad or ambulance crew'' is now defined as ''an officially recognized or designated public employee member of a rescue squad or ambulance crew.'' 42 U.S.C. 3796b(7). In the definition of ''law enforcement officer,'' the term ''enforcement of the laws'' has been replaced with ''enforcement of the criminal laws (including juvenile delinquency).'' *Id.* 3796b(6). As described above, these two clarifying statutory amendments are consistent with the well-settled understanding of the underlying terms by BJA since their original enactment into law. Because of these statutory changes, the rules enunciated in the holdings of the following cases have been nullified or rendered moot: *Hillensbeck* v. *United States*, 68 Fed. Cl. 62 (2005); *Hawkins* v. *United States*, 68 Fed. Cl. 74 (2005); *Cassella* v. *United States*, 68 Fed. Cl. 189 (2005); and *Hillensbeck* v. *United States*, 69 Fed. Cl. 369 (2006).

Also as a result of these statutory changes, the final rule now contains definitions of several terms (*e.g.*, ''officially recognized or designated public employee member of a squad or crew''), and omits the proposed definition of ''enforcement of the laws,'' as the meaning specified in the proposed rule now is clear on the face of the Act itself. The DOJ Reauthorization Act also amended the PSOB Act to ensure that the pre-existing statutory limitation on payments to non-civilians refers to the individual who was injured or killed, and not to any potential beneficiaries. 42 U.S.C. 3796a(5). For this reason, the final rule omits the language in the proposed rule that was designed to achieve this same result. Finally, the DOJ Reauthorization Act amended certain provisions of the PSOB Act regarding designation of beneficiaries when the officer dies without a spouse or eligible children. *Id.* 3796(a)(4). This amendment removes the need for a one-year waiting period to ensure payment to the beneficiary of the officer's ''most recently executed life insurance policy,'' and accordingly, BJA has amended the definition of this term and added other terms to conform to the statutory amendments.

III. Hometown Heroes Provisions

The implementation of the Hometown Heroes Act presented a difficult task because the statutory presumption created by that Act contains a number of undefined terms. Some commentators approved of the approach in the proposed rule, but others were dissatisfied with the proposed provisions, finding them too restrictive or difficult to apply, and expressing concerns about BJA's implementation of the statutory presumption. After reviewing the comments, BJA is persuaded that the provisions in the proposed rule relating to the Hometown Heroes Act should be amended in order to avoid their being more restrictive than the statute. In making these amendments, BJA has adopted a much more conceptual approach than it did in the proposed rule; specifically, BJA has replaced its prior per-se rule approach involving enumerated risk factors, with a rule tied to the concept of causation. A discussion of amendments of particular note follows.

Competent medical evidence to the contrary. One commentator opined that this term referred to ''medical evidence [that] indicated that there was an intervening, non-duty-related factor or event which would have independently caused'' the public safety officer's heart attack or stroke. BJA essentially agrees with this comment, and had attempted to capture the basic thrust of this same notion in the definition of this term in the proposed rule. Accordingly, in the final rule, BJA adopts a revised definition:

Competent medical evidence to contrary—The presumption raised by the [Hometown Heroes Act provision] is overcome by competent medical evidence to the contrary, when evidence indicates to a degree of medical probability that circumstances other than any engagement or participation described in the [Hometown Heroes Act provision], considered in combination (as one circumstance) or alone, were a substantial factor in bringing the heart attack or stroke about.

Complementing this definition is the term ''circumstances other than engagement or participation,'' which, in turn, is defined and does not include line of duty actions or activity; other definitions have been added to effect this new conceptual approach.

Nonroutine stressful or strenuous physical activity. The term, as written in the Hometown Heroes Act, contains an ambiguity, which BJA resolved in the proposed rule after closely considering the floor statements of the Congressional sponsors of the bill that became the Act. Nonetheless, one commentator criticized BJA's proposed definition of this term (''‘nonroutine stressful physical activity' or 'non-routine strenuous physical activity' ''), opining that the term should be interpreted to mean, instead, ''‘nonroutine stressful activity' or 'strenuous physical activity.' '' The commentator asserted that the legislative history had made it clear that the term should be so read, and quoted selectively from the floor statements of both sponsors of the bill (Rep. James Sensenbrenner and Sen. Patrick Leahy) to that effect. Despite the commentator's assertion, the selections quoted do not actually resolve the ambiguity, and, in any event, the commentator appears to have overlooked the sentences (by the same speakers) immediately preceding the floor statements quoted, which do apparently resolve it, by summarily referring to the term ''nonroutine stressful or strenuous physical activity'' as ''physical activity.'' 149 Cong. Rec. H12,299 (daily ed., Nov. 21, 2003) (describing the concern of some Members of Congress had that the bill as originally drafted would ''cover officers who did not engage in any *physical activity*, but merely happened to suffer a heart attack while at work'' (emphasis added)); id. at S16,053 (Nov. 25, 2003) (same). In their (nearly-identical) floor statements, both Congressional sponsors refer to ''physical activity'' alone—without qualification—as the target concept in the substitute amendment that inserted the term ''nonroutine stressful or strenuous physical activity'' into the bill specifically to allay the concerns of those Members of Congress:

The substitute amendment would create a presumption that an officer who died as a direct and proximate result of a heart attack or stroke died as a direct and proximate result of a personal injury sustained in the line of duty if: (1) That officer participated in a training exercise that involved nonroutine stressful or strenuous physical

activity or responded to a situation and such participation or response involved nonroutine stressful or strenuous physical law enforcement, hazardous material response, emergency medical services, prison security, fire suppression, rescue, disaster relief or other emergency response activity; (2) that officer suffered a heart attack or stroke while engaging or within 24 hours of engaging in *that physical activity*; and (3) such presumption cannot be overcome by competent medical evidence.

149 Cong. Rec. at H12,299 to H12,300 (emphasis added); *id.* at S16,053 (same). Given the foregoing, BJA has made no change to the definition of this term.

Retroactivity. A few commentators opined that the Hometown Heroes Act should apply retroactively. Despite BJA's great sympathy for those who have lost loved ones to duty-related heart attacks or strokes, BJA has no authority to give retroactive effect to that Act by rule or regulation. *See, e.g., Bice* v. *United States*, 61 Fed. Cl. 420 (2004).

Training exercise. One commentator requested that the criteria for ''training exercise'' be amended to clarify that not all training exercises include simulations of actual emergencies or provoke a high level of alarm, fear, or anxiety; the commentator urged BJA to include training exercises that merely ''include physical training and exercise.'' BJA believes that the commentator misunderstood the proposed rule. Under the proposed rule, training exercises that ''[e]ntail an unusually-high level of physical exertion'' (without reference to simulation of actual emergencies or provocation of high levels of alarm, fear, or anxiety) also are covered, if the other criteria in the rule are satisfied. For this reason, BJA has made no change here.

24-hour window. One commentator expressed concern that it will be difficult to pinpoint the time when the 24-hour window for engagement or participation in non-routine stressful or strenuous physical line-of-duty activity begins, and that the time-frame proposed in the rule was too restrictive. BJA agrees that the pinpointing the time well may be difficult in particular cases, but, as this time period is specified in the statute, it cannot be changed by rule.

IV. Line of Duty Activity or Action and Line of Duty Injury

Generally speaking, the first thing that BJA must ''determine[]'' in any PSOB death or disability claim is ''Was the individual on whom the claim is based a public safety officer within the meaning of the PSOB Act and its implementing regulations?'' or, put somewhat differently, ''Did the individual possess the legal authority to act as a public safety officer such as to confer that status upon him?'' Under the Act, 42 U.S.C. 3796(a) & (b), once BJA ''determines'' that the individual did possess that status, the next thing BJA must ''determine[]'' is whether that officer died (or was permanently and totally disabled) in the ''line of duty.'' And just as a claim necessarily must fail if the individual did not possess the legal status of public safety officer, so it must fail if the death or injury did not occur in the ''line of duty.'' Given the signal importance of the ''line of duty'' concept to understanding the PSOB Program, it is unsurprising that the term generated several comments.

One commentator opined that the bifurcated definitions of ''line of duty activity or action'' and ''line of duty injury'' in the proposed rule narrows the meaning of the single term ''line of duty'' in the current rule, and that the proposed rule appeared to fall short of the interpretation of ''line of duty'' given in *Davis* v. *United States*, 50 Fed. Cl. 192 (2001). BJA believes that the commentator has misunderstood the reasoning behind the bifurcation of the concept of ''line of duty'' into the two defined terms. Conceptually, the term ''line of duty'' remains unchanged from the current rule to the final rule.

At present, and under the final rule, the key issue in determining whether an individual (whom BJA has ''determine[d]'' to be ''a public safety officer'') acted in the ''line of duty'' is whether he was performing activities or actions that he was authorized or obligated to perform as a public safety officer. For a public safety officer whose primary function is the relevant area of public safety activities defined by the PSOB Act (*e.g.*, law enforcement, fire protection, emergency medical response), the definitions of ''line of duty action or activity'' and ''line of duty injury'' in the rule do not require that a public safety officer be engaged in any particular line of duty action in order to be considered as acting in the line of duty: What it does require, rather, is that the officer be performing an action or activity that he is ''authorized or obligated to perform by law, rule, regulation or condition of employment'' as a public safety officer at the time of his injury, or that it be shown that his injury resulted from his status as a public safety officer (*e.g.*, where a police officer (on or off-duty) is killed precisely because of his status as a police officer). For such ''primary function'' officers, it is presumed that, while they are ''on the clock,'' all of their authorized activities and actions are done in their capacity as public safety officers, and thus are ''line of duty'' actions or activities. In sharp contrast, for those who are not ''primary function'' officers (*i.e.*, those whose primary functions are not public safety activities and actions covered by the PSOB Act), the rule does require that they actually be performing a public safety action or activity (*e.g.*, law enforcement, fire protection, emergency medical response), at the time of the injury in order for it to be considered in the ''line of duty.''

Logically, it follows that the concept of ''line of duty'' is not limited only to activities and actions the public safety officer performs while ''on the clock.'' When an off-duty public safety officer responds to a situation with an action that he is authorized or obligated to perform as a public safety officer, he effectively goes ''on duty.'' The definitions of ''line of duty action or activity'' and ''line of duty injury'' articulate this well-settled notion of ''line of duty'' and are consistent with the current rule and with the rulings of the courts. This understanding of ''line of duty'' has been consistently applied by BJA throughout the 30-year life of the PSOB program. In any event, in order to make it as clear as possible that line of duty injuries include those that result from the individual's status as a public safety officer, BJA has included specific language to that effect in the definition of ''line of duty injury'' in the final rule.

Authorized commuting. Two commentators questioned whether the new definition of ''authorized commuting'' was unduly narrow. One commentator posited that, although the PSOB Act does not cover all conceivable commuting injuries, neither does it or the term ''line of duty'' exclude all commuting injuries. BJA agrees, and the definition of ''authorized commuting'' in the proposed regulation is consistent with this understanding. The definition is based on the concept of ''line of duty'' under both the current and final rules: When a public safety officer is engaged in activities or actions that he is obligated or authorized to perform as a public safety officer, he is acting in the line of duty, or is, in effect, ''on duty.'' In general, under workers' compensation law, injuries incurred while commuting to and from work are not necessarily regarded as occurring within the scope of employment, except under certain circumstances where it can be shown that there is a '' 'sufficient nexus between the employment and the injury to conclude that it was a circumstance of employment.' '' *Russell*, 637 F.2d at 1265 (quoting *Hicks* v. *General Motors*, 238 N.W.2d 194, 196 (Mich. Ct. App. 1975)). Analogously, in the case of a public safety officer's

commuting to and from work, a ''sufficient nexus'' between the circumstances and his duty as a public safety officer must be shown to establish that he was, in effect, ''on duty,'' and thus engaged in a ''line of duty activity or action.'' The definition of ''authorized commuting'' sets out three particular circumstances that long have been recognized by BJA and the courts, where it can be shown that a ''sufficient nexus'' exists between his employment as a public safety officer and the injury: (1) The officer is responding to a particular fire, police or rescue emergency; (2) the officer is commuting to or from work in an agency vehicle; or (3) the officer is commuting to or from work in a personal vehicle that he is required to use for his work. One commentator questioned why the mode of transportation was the focus of this provision and whether ''authorized commuting'' would cover officers who walked to work or who used public transportation. The mode of transportation articulated in the exceptions is what gives rise to the ''nexus'' between employment (*i.e.*, duty) and the circumstances. Clearly, as discussed in the preceding discussion of the ''line of duty'' definition, whenever a public safety officer responds to an emergency with authorized action, he is ''on duty.'' A public safety officer who is using an agency vehicle (or alternatively, using the vehicle that he is required to use in his work) is presumed rebuttably to be ''on duty'' while using the vehicle. In the case of officers who are commuting to or from work with other modes of transportation, the ordinary line of duty analysis would apply: Where it can be shown that they were injured while engaging in line of duty activities or actions, or that they sustained the injury as a result of their status as public safety officers, they would be considered as acting in the line of duty.

V. Section-by-Section Analysis

Section 32.2 Computation of Time

One commentator expressed concern about the way in which ''filing'' is effected under this provision, and in particular, opined that the term ''actually received'' was somewhat vague and could cause an unfair result for claimants if it were understood to refer strictly to the intended recipient (rather than his office). In response to this observation, BJA has amended this provision by specifying that a filing is deemed filed ''on the day that is actually received at the office'' of the receiving party.

Section 32.3 Definitions

Convincing evidence. One commentator opined that using the same word within a definition was inappropriate. BJA disagrees. The term ''clear and convincing evidence'' is a legal term of art that articulates a specific and well-settled legal standard of proof that is higher than a ''preponderance of the evidence'' standard but lower than a ''beyond a reasonable doubt'' standard. *Black's Law Dictionary* 251 (6th ed. 1990) (''That proof which results in reasonable certainty of the truth of the ultimate fact in controversy.'').

Crime. As two commentators aptly pointed out, although the term ''crime'' implicitly includes juvenile delinquency laws, clarifying language is needed to remove any ambiguity as to the point. BJA agrees. Accordingly, the definition of ''crime'' now includes the phrase ''an act or omission punishable as a criminal misdemeanor or felony.''

Firefighter. A number of firefighter associations questioned whether this definition, read together with the terms ''fire suppression,'' ''rescue squad or ambulance crew member,'' and ''line of duty activity or action,'' would exclude some of the duties and tasks performed by firefighters. In this vein, one commentator proposed use of the term ''fire protection'' in order to ensure inclusion of all such duties and tasks. Similarly, another commentator suggested that BJA consider the definition of ''firefighter'' contained in the Fair Labor Standards Act and reevaluate the definitions of ''firefighter'' and ''rescue squad crew member'' as drafted in the proposed rule. BJA agrees substantially with these helpful comments and has adopted the term ''fire protection,'' defined to include suppression of fire, hazardous-material emergency response, and emergency medical service or rescue activity, and has made conforming changes in defining the terms ''hazardous-material response'' and ''and emergency medical services,'' as well as corresponding changes as necessary in other definitions.

The president of a municipal fire marshals association also commented on this definition and requested that the term ''fire marshal'' be included to ensure coverage, pointing out that many fire marshals perform both law enforcement and firefighting duties, are certified peace officers, and also engage in hazardous materials mitigation. In considering this comment, BJA found that, according to the National Association of State Fire Marshals, fire marshal responsibilities vary considerably among jurisdictions, and range from regulatory responsibilities (some of which involve criminal law enforcement), to actual firefighting and hazardous material emergency response. Some fire marshals have a more regulatory role, for example, issuing rules and conducting inspections; others have the authority to issue criminal citations and enforce fire safety laws and regulations; while still others may not necessarily have the same authority as police officers. In light of this wide variation, BJA determined that the term ''fire marshal'' does not lend itself to a clear definition. BJA also finds that it is unnecessary to define the term specifically in order for fire marshals to be covered under the PSOB Act in appropriate circumstances. A PSOB claim involving a fire marshal will be analyzed as it always has been by the PSOB program: Where it can be shown that a fire marshal had the authority to engage in ''fire protection'' (as defined in the final rule and discussed above) or law enforcement activities, he would be considered a ''public safety officer'' under the Act; where it cannot be shown, he would not be. As with all PSOB claims, once the threshold determination of the individual's status as a public safety officer is made, the second inquiry (relating to line of duty) would follow, as to whether his fire protection or law enforcement duties were primary or secondary duties. In any event, as a result of the foregoing regulatory changes, the rule enunciated in the holding of *Messick ex rel. Kangas* v. *United States*, 70 Fed. Cl. 319 (2006), *appeal filed*, No. 06–5087 (Fed. Cir. May 26, 2006) has been nullified or rendered moot.

Gross negligence. One commentator questioned whether the gross negligence provision would exclude first responders who did not wear protective clothing while participating in the breakdown of clandestine drug labs, because their employers either did not provide the clothing, or did not mandate that it be worn, and as a result, were exposed to chemicals that lead to terminal illness. The analysis of cases under the ''gross negligence'' provision necessarily would entail consideration of many different evidentiary matters, and as such, the question does not lend itself productively to being answered hypothetically. As a general matter, it is important to point out that ''occupational diseases'' have always been excluded as injuries under the PSOB Act. See, *e.g., Smykowski* v. *United States*, 647 F.2d 1103, 1105 & n.6 (Ct. Cl. 1981). This is because the PSOB Act requires that in order to be

eligible, the claimant must show that the public safety officer died or was disabled as ''direct and proximate'' or ''direct'' result of an injury. Evidence of generalized exposure to chemicals, without more, is not sufficient to show direct causation. The PSOB program has paid claims, however, where claimants have shown with preponderant evidence (*i.e.*, evidence showing that it is more likely than not) the required causal connection between the public safety officer's illness or death and the exposure to chemicals while on duty.

Intentional action or activity. One commentator expressed concern that the definitions of ''intention,'' ''intentional action or activity,'' and ''intentional misconduct,'' which implement 42 U.S.C. 3796a, could result in disqualifying a public safety officer whose intentional line of duty acts were a substantial factor in causing his death or catastrophic injury. In response to this concern, BJA has amended the definition of ''intentional action or activity'' specifically to exclude line of duty actions or activities.

Instrumentality. A private corporate provider of fire and rescue services expressed concerns about the requirement in the definition of ''instrumentality'' of a public agency that an entity share sovereign immunity with a public agency, or that the relevant agency have tort liability for the acts and omissions of the entity. In contrast to these concerns, another commentator expressed approval of the thrust of this definition. The PSOB Act dictates that a ''public safety officer'' must be ''an individual serving a public agency in an official capacity,'' which means that the individual must be cloaked with the public agency's authority (*i.e.*, must be authorized, recognized or designated as a functional part of a public agency), and his acts and omissions must be legally recognized as those of the public agency. It follows, then, that in order for an entity to be considered an ''instrumentality'' of a public agency, its acts and omissions must be similarly legally recognized by a public agency by cloaking the entity's acts and omissions with its sovereign immunity or assuming tort liability for them. This is consistent with the Act.

Official capacity. One commentator pointed out that it was somewhat unclear in the definition of ''official capacity'' who was supposed to authorize, recognize, or designate the individual as functionally within or part of an agency. In response, BJA has included language to indicate that these actions are to be taken by the public agency itself. The definition of this term incorporates a concept that has been consistently applied by BJA throughout the 30-year life of the PSOB program, and was expressly upheld by the Federal Circuit in *Chacon* v. *United States*, 48 F.3d 508, 512–513 (Fed. Cir. 1995). The proposed rule was (and the final rule is) expressly intended to codify this holding in *Chacon*. Related to this definition are the definitions of ''department or agency,'' ''employee,'' ''functionally within or part of,'' ''instrumentality,'' and ''official duties,'' which are consonant with the rule enunciated in the holding of *LaBare* v. *United States*, _____ Fed. Cl. _____ (2006), and which, all told (and in combination with other changes made here), nullify or render moot the rule enunciated in the holding of *Groff* v. *United States*, _____ Fed. Cl. _____ (2006).

Parent-child relationship. In reviewing the proposed rule, BJA observed that this term as written was more restrictive than the statute in that it could appear that the relationship could be demonstrated only by the evidence prescribed in the definition. To avoid this result, BJA has greatly simplified the rule by providing only that the relationship be shown through convincing evidence, without specifying the particular evidence required. As a result of this change, BJA will consider any proper evidence, which may consist of such things as a written acknowledgment of parenthood; a judicial decree ordering child support; a public or religious record naming the public safety officer as parent (with the officer's consent); affidavits (from persons without direct or indirect financial interest in a PSOB claim) attesting that the child was accepted by the officer as his child; records of a public agency or a school (with the officer's consent); the claiming of the child as a dependent on the officer's tax return; or other credible evidence indicating acceptance of the individual as a child by the public safety officer. An analogous change was made in the definition of ''child-parent relationship.''

Rescue activity and rescue squad or ambulance crew. In response to the point made by one commentator that the proposed regulation, unlike the current regulation, did not contain a definition of ''rescue,'' BJA has included within the final rule (''rescue activity'') the substance of that definition in the current rule, and made the corresponding changes to the definition of ''rescue squad or ambulance crew.''

Terrorist attack. There were several comments relating to the definition of ''terrorist attack.'' First, the comments expressed concern about the requirement that the BJA Director make a determination that a terrorist attack was one of an ''extraordinary or cataclysmic character so as to make particularized factual finding impossible, impractical, or unduly burdensome,'' and opined that the Director's determination could ''trump'' the determination by the Attorney General that such an event was a terrorist act. Simply put, the comments appear to spring from the mistaken belief that the term ''terrorist attack'' is synonymous with ''terrorist act.'' Additionally, the comments expressed concern about coverage of public safety officers who prevent or investigate aspects of terrorism and suggest that the regulations be expanded to ensure such coverage. There is no applicable statutory definition of the term ''terrorist attack,'' which was enacted into law here as section 611 of the USA PATRIOT Act (not an amendment to the PSOB Act, but codified at 42 U.S.C. 3796c–1). But on its face, the term fairly may be understood to mean an ''act of terrorism'' (which is a term defined in the USA PATRIOT Act) that is in the nature of an ''attack.'' For this reason, the proposed rule is written in terms of an event that is ''extraordinary'' or ''cataclysmic''—in short, an event that approximates those that gave rise to the enactment of section 611. The notion informing the certification process described at section 611 is avoidance of potentially enormous administrative burdens for claimants that could lead to unnecessary delays of benefit payments; the provision, in principle, is not intended to add another dimension of coverage for public safety officers. Nonetheless, BJA agrees with the commentator that determination of what constitutes a ''terrorist attack'' should be left to the Attorney General and those to whom he may delegate his authority. For this reason, BJA has amended the definition of ''terrorist attack,'' omitting the language requiring the BJA Director's determination. With regard to coverage of prevention and investigation of terrorist acts, section 611 itself requires such coverage, and nothing in the proposed rule was intended to prevent it (or lawfully could have done so). Insofar as a public safety officer acts in the line of duty, whether preventing, responding to, or investigating a terrorist attack, he would be covered under section 611. Nonetheless, in order that there be no question on the point, BJA has added clarifying language to this effect in the final rule.

Voluntary intoxication. One commentator questioned whether the

regime set out in the definition of ''voluntary intoxication'' might preclude valid claims involving alcohol consumption. The PSOB Act clearly sets out the legal limits with respect to alcohol and the rule cannot reach beyond what is required by statute. Nonetheless, further to this commentator's question, BJA has made some clarifying changes, relating to intoxication, in the final rule.

Section 32.5 Evidence

One commentator expressed concerns about the evidence provisions. First, the commentator objected to the use of the term ''preponderance of the evidence'' proposed in sec. 32.5(a), arguing that the evidentiary standard of ''preponderance of the evidence'' required for claimants to make successful claims places a greater burden of proof on them than in the current rule. In the commentator's view, BJA is replacing the ''reasonable doubt'' provision in the current regulations with a ''new and higher evidentiary standard.'' The commentator clearly misunderstands this provision in the current rule, as well as the application of the ''preponderance of the evidence'' standard with regard to PSOB claims. First, the current ''reasonable doubt'' provision does not apply to the claimant's burden of proof; *i.e.*, it does not require the claimant to provide evidence rising to the level of ''reasonable doubt.'' The provision in the current rule, rather, is merely an evidentiary mechanism that assists the decision-maker in weighing factual evidence arising from the circumstances of a public safety officer's death or total and permanent disability. Unfortunately, this provision has generated no end of misunderstanding, confusion, and misapplication among claimants, and as well as disagreement in the courts. *See, e.g., Tafoya* v. *United States*, 8 Cl. Ct. 256 (1985); *Demutiis* v. *United States*, 49 Fed. Cl. 81 (2000), *aff'd in part*, 291 F.3d 1373 (Fed. Cir. 2002); *Bice* v. *United States*, 61 Fed. Cl. 420 (2004). For this reason, BJA proposed the removal of this provision and the articulation of the standard of proof as preponderant evidence (also known as ''more likely than not,'' *cf. Black's Law Dictionary* 1182 (6th ed. 1990)). This commonly applied standard is the same standard BJA has used as a default matter in its application of the evidentiary provisions in the current rule. Nonetheless, the commentator's comment has persuaded BJA that the term ''preponderance of the evidence'' may be daunting to some members of the public, so it has rephrased the standard as ''more likely than not'' in the final rule. Second, the commentator objects to the language of § 32.5(e), which provides that certifications under 42 U.S.C. 3796c–1 ''shall constitute *prima facie* evidence * * * of the public agency's acknowledgment that public safety officer, as of the event date was * * * serving the agency in an official capacity,'' alleging that this could exclude public safety officers who heroically respond to events outside of their jurisdiction, or without express authorization of their agency. The proposed rule requires nothing more than what is required by 42 U.S.C. 3796c–1, which dictates what must be certified, and BJA has no authority to change those requirements.

Section 32.7 Fees for Representative Services

One commentator made the excellent suggestion that the rate of payment for representative services in PSOB claims should be linked to the Equal Access to Justice Act (''EAJA''). BJA has consistently used the EAJA as its guide in determining attorneys fees, and agrees that specifying this in the rule itself will better inform claimants and their representatives with regard to these payments.

Section 32.12 Time for Filing a Claim

One commentator asked how the thirty-three (33) day time frame proposed for certain filings (but not for the initial filing of claims themselves) was arrived upon by BJA. BJA started from the premise of a standard thirty-day period and then added three more days (the time period customarily given to parties in civil litigation, under the so-called ''Mailbox Rule.'') *See, e.g.*, Fed. R. Civ. P. 6(e).

Section 32.13 Definitions

Beneficiary of a life insurance policy of a public safety officer. One commentator remarked about the moral difficulty occasioned by cases where it is determined that only one of the officer's parents is the ''the individual designated by such officer as beneficiary under such officer's most recently executed life insurance policy,'' *see* 42 U.S.C. 3796(a)(4), and only that parent receives payment because of that designation. The commentator requested that BJA consider a way to allow each parent to receive 50% of the benefit in these cases. The PSOB Act itself dictates that designated beneficiaries are to receive benefits according to the terms of the designation, and dictates that those beneficiaries are to receive priority over parents; this statutorily compelled result cannot be changed by rule. Additionally, the commentator requested that the one-year waiting period currently required of claimants who are life-insurance beneficiaries be omitted. Prior to the enactment of the DOJ Reauthorization Act, it was not immediately possible to determine the universe of insurance policies in a claim, and, in order to avoid the risk of erroneous and/or double payment, BJA required a one-year period to pass in order to ensure that no other life insurance policy existed that was more ''recently executed.'' The DOJ Reauthorization Act amended 42 U.S.C. 3796(a)(4) to require that the qualifying life insurance policy be ''on file at the time of death with [the officer's] public safety agency,'' thereby obviating the need for a one-year waiting period. Accordingly, BJA has made appropriate conforming changes that are contained in the final rule.

Section 32.15 Prerequisite Certification

One commentator questions the reasoning behind this requirement, as status as a public safety officer and line of duty determinations by the decedent's employing agency are legal determinations. The commentator appears to misunderstand the provision, which is aimed at establishing various things as factual, not legal, matters; *i.e.*, to establish how the employing agency regarded the public safety officer at the time of fatal injury. Certain facts, key to entitlement to benefits under the statute, are particularly within the ken of the employing public agencies, and benefits are not payable under the PSOB Act when the employing public agency itself has refused to pay analogous benefits on the ground that the individual was not a public safety officer, or was not serving the public agency in an official capacity at the time of the fatal injury, or was not injured in the line of duty, as the case may be. For this reason, BJA has not adopted any change here (or in sec. 32.25, an analogous provision) in response to this comment.

Section 32.28 Reconsideration

One commentator opined that the three-year period for the staying of a reconsideration of a disability claim was an insufficient amount of time for the effects of a catastrophic injury to fully develop. The commentator has misunderstood the regulation. The time-frame is actually nine years because, upon conclusion of the stay, the claimant has six additional years to file evidence with the PSOB Office in support of his claimed disability. In the final rule, BJA has amended this provision to clarify this point.

Section 32.33 Definitions

After further review of the definitions proposed in this section, BJA has concluded that several changes are warranted—first, to clarify analytical distinctions that are commonly applied in the program but were not apparent (or not easily apparent) on the face of the proposed rule (*e.g.*, there are two different kinds of education benefit ''claims'': ''threshold claims'' and ''financial claims''; definitions of ''eligible dependent,'' ''grading period''), thus making the final rule easier for claimants to use; and second, to correct proposed language that would or might have had the unintentional effect of making the rule more restrictive or limiting than the statute (*e.g.*, the definitions of ''child of eligible public safety officer,'' ''dependent,'' ''educational expenses,'' ''eligible dependent,'' ''spouse of an eligible public safety officer at the time of death or on the date of a totally and permanently disabling injury,'' ''tax year'').

Section 32.36 Payment and Repayment

Additional internal review of the proposed rule leads BJA to change the proposed provisions relating to financial need so as to clarify their operation in much greater detail and thus to ensure their conformity to the ''sliding scale'' requirements of the statute. Additionally, a provision in this section is being changed to clarify that the circumstances under which repayment to the United States may be warranted are more limited than was apparent on the face of the proposed rule.

Section 32.45 Hearings

In response to one commentator's recommendation that witnesses be sworn and sequestered, BJA has amended the final rule here and in section 32.5(c) to adopt certain provisions of the Federal Rules of Evidence (over and above those already prescribed in the proposed rule) and to include an express provision requiring the hearing officer to exclude witnesses from hearings while others are giving testimony (except for the claimant or any person whose presence is shown by the claimant to be essential to presentation of his claim). Another commentator questioned whether this section permits a record review of a claim (*i.e.*, a review without a hearing). BJA responds that (in the event a claimant does not request a hearing) a record review, supplemented with any evidence the hearing officer may require, is precisely the means by which a hearing officer ordinarily would determine a claim. In furtherance of this point, BJA has made amendments, contained in the final rule, that make express the determining official's authority to require evidence.

II. Regulatory Certifications

Regulatory Flexibility Act

The Office of Justice Programs, in accordance with the Regulatory Flexibility Act (5 U.S.C. 605(b)), has reviewed this regulation and by approving it certifies that this regulation will not have a significant economic impact on a substantial number of small entities for the following reasons: This final rule addresses Federal agency procedures; furthermore, this final rule makes amendments to clarify existing regulations and agency practice concerning death, disability, and education payments and assistance to eligible public safety officers and their survivors and does nothing to increase the financial burden on any small entities.

Executive Order 12866

This final rule has been drafted and reviewed in accordance with Executive Order No. 12866 (Regulatory Planning and Review), sec. 1(b), Principles of Regulation. The costs of implementing this final rule are minimal. Claimants must complete and submit no more than four forms; a ''Claim for Death Benefits,'' OMB Form No. 1121–0024; a ''Report of Public Safety Officers' Death,'' OMB Form No. 1121–0025; a ''Report of Public Safety Officers' Permanent and Total Disability,'' OMB Form No. 1121–0166; an ''Application for Public Safety Officers' Educational Assistance (42 U.S.C. 3796d),'' OMB Form No. 1121–0220; and a ''Consent to Release Information'' pursuant to 5 U.S.C. 552a(b); and supply adequate documentation concerning the public safety officer's injury. The only costs to OJP consist of appropriated funds. The benefits of the final rule far exceed the costs. The amendments clarify the preexisting regulations and provide coverage for chaplains, life insurance and death beneficiaries, and the survivors of certain heart attack and stroke victims.

The Office of Justice Programs has determined that this final rule is a ''significant regulatory action'' under Executive Order No. 12866 (Regulatory Planning and Review), sec. 3(f), and accordingly this final rule has been reviewed by the Office of Management and Budget.

Executive Order 13132

This final rule will not have substantial direct effects on the States, on the relationship between the national government and the States, or on distribution of power and responsibilities among the various levels of government. The PSOB Act provides benefits to individuals and does not impose any special or unique requirements on States or localities. Therefore, in accordance with Executive Order No. 13132, it is determined that this final rule does not have sufficient federalism implications to warrant the preparation of a Federalism Assessment.

Executive Order 12988—Civil Justice Reform

This final rule meets the applicable standards set forth in sections 3(a) & (b)(2) of Executive Order No. 12988.

Unfunded Mandates Reform Act of 1995

This final rule will not result in the expenditure by State, local and tribal governments, in the aggregate, or by the private sector, of $100,000,000 or more in any one year, and it will not significantly or uniquely affect small governments. The PSOB Act is a federal benefits program that provides benefits directly to qualifying individuals. Therefore, no actions were deemed necessary under the provisions of the Unfunded Mandates Reform Act of 1995.

Small Business Regulatory Enforcement Fairness Act of 1996

This final rule is not a major rule as defined by section 804 of the Small Business Regulatory Enforcement Fairness Act of 1996. This final rule will not result in an annual effect on the economy of $100,000,000 or more; a major increase in costs or prices; or significant adverse effects on competition, employment, investment, productivity, innovation, or on the ability of United States-based companies to compete with foreign-based companies in domestic and export markets.

Paperwork Reduction Act

The collection of information requirements contained in this final rule have been submitted to and approved by OMB, in accordance with the Paperwork Reduction Act of 1995 (44 U.S.C. 3501, *et seq.*). Claimants seeking benefits under the PSOB Act variously must complete and return up to three of four OMB-approved forms: a ''Claim for Death Benefits,'' OMB Form No. 1121–0024; a ''Report of Public Safety Officers' Death,'' OMB Form No. 1121–0025; a ''Report of Public Safety

Officers' Permanent and Total Disability,'' OMB Form No. 1121–0166; and an ''Application for Public Safety Officers' Educational Assistance (42 U.S.C. 3796d),'' OMB Form No. 1121–0220.

List of Subjects in 28 CFR Part 32

Administrative practice and procedure, Claims, Disability benefits, Education, Emergency medical services, Firefighters, Law enforcement officers, Reporting and recordkeeping requirements, Rescue squad.

■ Accordingly, for the reasons set forth in the preamble, part 32 of chapter I of Title 28 of the Code of Federal Regulations is revised to read as follows:

PART 32—PUBLIC SAFETY OFFICERS' DEATH, DISABILITY, AND EDUCATIONAL ASSISTANCE BENEFIT CLAIMS

Sec.
32.0 Scope of part.

Subpart A—General Provisions

32.1 Scope of subpart.
32.2 Computation of time; filing.
32.3 Definitions.
32.4 Terms; construction, severability.
32.5 Evidence.
32.6 Payment and repayment.
32.7 Fees for representative services.
32.8 Exhaustion of administrative remedies.

Subpart B—Death Benefit Claims

32.11 Scope of subpart.
32.12 Time for filing claim.
32.13 Definitions.
32.14 PSOB Office determination.
32.15 Prerequisite certification.
32.16 Payment.
32.17 Request for Hearing Officer determination.

Subpart C—Disability Benefit Claims

32.21 Scope of subpart.
32.22 Time for filing claim.
32.23 Definitions.
32.24 PSOB Office determination.
32.25 Prerequisite certification.
32.26 Payment.
32.27 Motion for reconsideration of negative disability finding.
32.28 Reconsideration of negative disability finding.
32.29 Request for Hearing Officer determination.

Subpart D—Educational Assistance Benefit Claims

32.31 Scope of subpart.
32.32 Time for filing claim.
32.33 Definitions.
32.34 PSOB Office determination.
32.35 Disqualification.
32.36 Payment and repayment.
32.37 Request for Hearing Officer determination.

Subpart E—Hearing Officer Determinations

32.41 Scope of subpart.
32.42 Time for filing request for determination.
32.43 Appointment and assignment of Hearing Officers.
32.44 Hearing Officer determination.
32.45 Hearings.
32.46 Director appeal.

Subpart F—Director Appeals & Reviews

32.51 Scope of subpart.
32.52 Time for filing Director appeal.
32.53 Review.
32.54 Director determination.
32.55 Judicial appeal.

Authority: Public Safety Officers' Benefits Act of 1976 (42 U.S.C. ch. 46, subch. 12); Public Law 107–37; USA PATRIOT Act, sec. 611 (42 U.S.C. 3796c–1).

§ 32.0 Scope of part.

This part implements the Act.

Subpart A—General Provisions

§ 32.1 Scope of subpart.

This subpart contains provisions generally applicable to this part.

§ 32.2 Computation of time; filing.

(a) In computing any period of time prescribed or allowed, the day of the act, event, or default from which the designated period of time begins to run shall not be included. The last day of the period so computed shall be included, unless it is a Saturday, a Sunday, or a federal legal holiday, or, when the act to be done is a filing with the PSOB Office, a day on which weather or other conditions have caused that Office to be closed or inaccessible, in which event the period runs until the end of the next day that is not one of the aforedescribed days.

(b) A filing is deemed filed with the PSOB Office, a Hearing Officer, the Director, or any other OJP office, -officer, -employee, or -agent, only on the day that it actually is received at the office of the same. When a filing is prescribed to be filed with more than one of the foregoing, it shall be deemed filed as of the day the last such one so receives it.

(c) Notice is served by the PSOB Office upon an individual on the day that it is—

(1) Mailed, by U.S. mail, addressed to the individual (or to his representative) at his (or his representative's) last address known to such Office;

(2) Delivered to a courier or other delivery service, addressed to the individual (or to his representative) at his (or his representative's) last address known to such Office; or

(3) Sent by electronic means such as telefacsimile or electronic mail, addressed to the individual (or to his representative) at his (or his representative's) last telefacsimile number or electronic-mail address, or other electronic address, known to such Office.

(d) In the event of withdrawal or abandonment of a filing, the time periods prescribed for the filing thereof shall not be tolled, unless, for good cause shown, the Director grants a waiver.

(e) No claim may be filed (or approved) under the Act, at 42 U.S.C. 3796(a) or (b), with respect to an injury, if a claim under the Act, at 42 U.S.C. 3796c–1 or Public Law 107–37, has been approved, with respect to the same injury.

(f) No claim may be filed (or approved) under the Act, at 42 U.S.C. 3796c–1 or Public Law 107–37, with respect to an injury, if a claim under the Act, at 42 U.S.C. 3796(a) or (b), has been approved, with respect to the same injury.

§ 32.3 Definitions.

Act means the Public Safety Officers' Benefits Act of 1976 (generally codified at 42 U.S.C. 3796, *et seq.*; part L of title I of the Omnibus Crime Control and Safe Streets Act of 1968) (including (uncodified) section 5 thereof (rule of construction and severability)), as applicable according to its effective date and those of its various amendments (*e.g.*, Sept. 29, 1976 (deaths of State and local law enforcement officers and firefighters); Jan. 1, 1978 (educational assistance); Oct. 1, 1984 (deaths of federal law enforcement officers and firefighters); Oct. 18, 1986 (deaths of rescue squad and ambulance crew members); Nov. 29, 1990 (disabilities); Oct. 30, 2000 (disaster relief workers); Sept. 11, 2001 (chaplains and insurance beneficiaries); Dec. 15, 2003 (certain heart attacks and strokes); and Apr. 5, 2006 (designated beneficiaries)); and also includes Public Law 107–37 and sections 611 and 612 of the USA PATRIOT Act (all three of which relate to payment of benefits, described under subpart 1 of such part L, in connection with terrorist attacks).

Adopted child—An individual is an adopted child of a public safety officer only if—

(1) The individual is legally adopted by the officer; or

(2) As of the injury date, and not being a stepchild, the individual was—

(i) Known by the officer not to be his biological first-generation offspring; and

(ii) After the officer obtained such knowledge, in a parent-child relationship with him.

Authorized commuting means travel by a public safety officer—

(1) In the course of actually responding to a fire, rescue, or police emergency; or

(2) Between home and work (at a situs authorized or required by the public agency he serves)—

(i) Using a vehicle provided by such agency, pursuant to a requirement or authorization by such agency that he use the same for commuting; or

(ii) Using a vehicle not provided by such agency, pursuant to a requirement by such agency that he use the same for work.

BJA means the Bureau of Justice Assistance, OJP.

Cause—A death, injury, or disability is caused by intentional misconduct if—

(1) The misconduct is a substantial factor in bringing it about; and

(2) It is a reasonably foreseeable result of the misconduct.

Chaplain means a clergyman, or other individual trained in pastoral counseling, who meets the definition provided in the Act, at 42 U.S.C. 3796b(2).

Child of a public safety officer means an individual—

(1) Who—

(i) Meets the definition provided in the Act, at 42 U.S.C. 3796b(3), in any claim—

(A) Arising from the public safety officer's death, in which the death was simultaneous (or practically simultaneous) with the injury; or

(B) Filed after the public safety officer's death, in which the claimant is the officer's—

(*1*) Biological child, born after the injury date;

(*2*) Adopted child, adopted by him after the injury date; or

(*3*) Stepchild, pursuant to a marriage entered into by him after the injury date; or

(ii) In any claim not described in paragraph (1)(i) of this definition—

(A) Meets (as of the injury date) the definition provided in the Act, at 42 U.S.C. 3796b(3), *mutatis mutandis* (*i.e.*, with ''deceased'' and ''death'' being substituted, respectively, by ''deceased or disabled'' and ''injury''); or

(B) Having been born after the injury date, is described in paragraph (1)(i)(B)(*1*), (*2*), or (*3*) of this definition; and

(2) With respect to whom the public safety officer's parental rights have not been terminated, as of the injury date.

Convincing evidence means clear and convincing evidence.

Crime means an act or omission punishable as a criminal misdemeanor or felony.

Criminal laws means that body of law that declares what acts or omissions are crimes and prescribes the punishment that may be imposed for the same.

Department or agency—An entity is a department or agency within the meaning of the Act, at 42 U.S.C. 3796b(8), and this part, only if the entity is—

(1) A court;

(2) An agency described in the Act, at 42 U.S.C. 3796b(9)(B) or (C); or

(3) Otherwise a public entity—

(i) That is legally an express part of the internal organizational structure of the relevant government;

(ii) That has no legal existence independent of such government; and

(iii) Whose obligations, acts, omissions, officers, and employees are legally those of such government.

Determination means the approval or denial of a claim (including an affirmance or reversal pursuant to a motion for reconsideration under § 32.27), or the determination described in the Act, at 42 U.S.C. 3796(c).

Director means the Director of BJA.

Direct and proximate result of an injury—Except as may be provided in the Act, at 42 U.S.C. 3796(k), a death or disability results directly and proximately from an injury if the injury is a substantial factor in bringing it about.

Disaster relief activity means activity or an action encompassed within the duties described in the Act, at 42 U.S.C. 3796b(9)(B) or (C).

Disaster relief worker means any individual who meets the definition provided in the Act, at 42 U.S.C. 3796b(9)(B) or (C).

Disturbance includes any significant and negative alteration, any significant negative deviation from the objectively normal, or any significant deterioration.

Divorce means a legally-valid divorce from the bond of wedlock (*i.e.*, the bond of marriage), except that, notwithstanding any other provision of law, a spouse (or purported spouse) of a living individual shall be considered to be divorced from that individual within the meaning of this definition if, subsequent to his marriage (or purported marriage) to that individual, the spouse (or purported spouse)—

(1) Holds himself out as being divorced from, or not being married to, the individual;

(2) Holds himself out as being married to another individual; or

(3) Was a party to a ceremony purported by the parties thereto to be a marriage between the spouse (or purported spouse) and another individual.

Drugs or other substances means controlled substances within the meaning of the drug control and enforcement laws, at 21 U.S.C. 802(6).

Educational/academic institution means an institution whose primary purpose is educational or academic learning.

Eligible payee means—

(1) A beneficiary described in the Act, at 42 U.S.C. 3796(a), with respect to a claim under subpart B of this part; or

(2) A beneficiary described in the Act, at 42 U.S.C. 3796(b), with respect to a claim under subpart C of this part.

Emergency medical services means—

(1) Provision of first-response emergency medical care (other than in a permanent medical-care facility); or

(2) Transportation of persons in medical distress (or under emergency conditions) to medical-care facilities.

Employed by a public agency—A public safety officer is employed, within the meaning of the Act, at 42 U.S.C. 3796c–1 or Public Law 107–37, by a public agency, when he—

(1) Is employed by the agency in a civilian capacity; and

(2) Is—

(i) Serving the agency in an official capacity (with respect to officers of any kind but disaster relief workers); or

(ii) Performing official duties as described in the Act, at 42 U.S.C. 3796b(9)(B) or (C) (with respect to disaster relief workers).

Employee does not include—

(1) Any independent contractor; or

(2) Any individual who is not eligible to receive death or disability benefits from the purported employer on the same basis as a regular employee of such employer would.

Filing means any claim, request, motion, election, petition, or appeal, and any item or matter (*e.g.*, evidence, certifications, authorizations, waivers, legal arguments, or lists) that is, or may be, filed with the PSOB Office.

Fire protection means—

(1) Suppression of fire;

(2) Hazardous-materials emergency response; or

(3) Emergency medical services or rescue activity of the kind performed by firefighters.

Fire, rescue, or police emergency includes disaster-relief emergency.

Firefighter means an individual who—

(1) Is trained in—

(i) Suppression of fire; or

(ii) Hazardous-materials emergency response; and

(2) Has the legal authority and -responsibility to engage in the suppression of fire, as—

(i) An employee of the public agency he serves, which legally recognizes him to have such (or, at a minimum, does not deny (or has not denied) him to have such); or

(ii) An individual otherwise included within the definition provided in the Act, at 42 U.S.C. 3796b(4).

Functionally within or -part of—No individual shall be understood to be functionally within or -part of a public agency solely by virtue of an independent contractor relationship.

Gross negligence means great, heedless, wanton, indifferent, or reckless departure from ordinary care, prudence, diligence, or safe practice—

(1) In the presence of serious risks that are known or obvious;

(2) Under circumstances where it is highly likely that serious harm will follow; or

(3) In situations where a high degree of danger is apparent.

Hazardous-materials emergency response means emergency response to the threatened or actual release of hazardous materials, where life, property, or the environment is at significant risk.

Heart attack means myocardial infarction or sudden cardiac arrest.

Illegitimate child—An individual is an illegitimate child of a public safety officer only if he is a natural child of the officer, and the officer is not married to the other biological parent at (or at any time after) the time of his conception.

Incapable of self-support because of physical or mental disability—An individual is incapable of self-support because of physical or mental disability if he is under a disability within the meaning of the Social Security Act, at 42 U.S.C. 423(d)(1)(A), applicable *mutatis mutandis.*

Independent contractor includes any volunteer, servant, employee, contractor, or agent, of an independent contractor.

Injury means a traumatic physical wound (or a traumatized physical condition of the body) caused by external force (such as bullets, explosives, sharp instruments, blunt objects, or physical blows), chemicals, electricity, climatic conditions, infectious disease, radiation, virii, or bacteria, but does not include any occupational disease, or any condition of the body caused or occasioned by stress or strain.

Injury date means the time of the line of duty injury that—

(1) Directly and proximately results in the public safety officer's death, with respect to a claim under—

(i) Subpart B of this part; or

(ii) Subpart D of this part, by virtue of his death; or

(2) Directly (or directly and proximately) results in the public safety officer's total and permanent disability, with respect to a claim under—

(i) Subpart C of this part; or

(ii) Subpart D of this part, by virtue of his disability.

Instrumentality means entity, and does not include any individual, except that no entity shall be considered an instrumentality within the meaning of the Act, at 42 U.S.C. 3796b(8), or this part, unless, as of the injury date,

(1) The entity—

(i) Is legally established, -recognized, or -organized, such that it has legal existence; and

(ii) Is so organized and controlled, and its affairs so conducted, that it operates and acts solely and exclusively as a functional part of the relevant government, which legally recognizes it as such (or, at a minimum, does not deny (or has not denied) it to be such); and

(2) The entity's—

(i) Functions and duties are solely and exclusively of a public character;

(ii) Services are provided generally to the public as such government would provide if acting directly through its public employees (*i.e.*, they are provided without regard to any particular relationship (such as a subscription) a member of the public may have with such entity); and

(iii) Acts and omissions are, and are recognized by such government as (or, at a minimum, not denied by such government to be), legally—

(A) Those of such government, for purposes of sovereign immunity; or

(B) The responsibility of such government, for purposes of tort liability.

Intention—A death, injury, or disability is brought about by a public safety officer's intention if—

(1) An intentional action or activity of his is a substantial factor in bringing it about; and

(2) It is a reasonably foreseeable result of the intentional action or activity.

Intentional action or activity means activity or action (other than line of duty activity or action), including behavior, that is—

(1) A result of conscious volition, or otherwise voluntary;

(2) Not a result of legal insanity or of impulse that is legally and objectively uncontrollable; and

(3) Not performed under legal duress or legal coercion of the will.

Intentional misconduct—Except with respect to voluntary intoxication at the time of death or catastrophic injury, a public safety officer's action or activity is intentional misconduct if—

(1) As of the date it is performed,

(i) Such action or activity—

(A) Is in violation of, or otherwise prohibited by, any statute, rule, regulation, condition of employment or service, official mutual-aid agreement, or other law; or

(B) Is contrary to the ordinary, usual, or customary practice of similarly-situated officers within the public agency in which he serves; and

(ii) He knows, or reasonably should know, that it is so in violation, prohibited, or contrary; and

(2) Such action or activity—

(i) Is intentional; and

(ii) Is—

(A) Performed without reasonable excuse; and

(B) Objectively unjustified.

Involvement—An individual is involved in crime and juvenile delinquency control or reduction, or enforcement of the criminal laws (including juvenile delinquency), only if he is an officer of a public agency and, in that capacity, has legal authority and -responsibility to arrest, apprehend, prosecute, adjudicate, correct or detain (in a prison or other detention or confinement facility), or supervise (as a parole or probation officer), persons who are alleged or found to have violated the criminal laws, and is recognized by such agency, or the relevant government (or, at a minimum, not denied by such agency, or the relevant government), to have such authority and responsibility.

Itemized description of representative services provided—A description of representative services provided is itemized only when it includes—

(1) The beginning and end dates of the provision of the services;

(2) An itemization of the services provided and the amount of time spent in providing them; and

(3) An itemization of the expenses incurred in connection with the services provided for which reimbursement is sought.

Kinds of public safety officers—The following are the different kinds of public safety officers:

(1) Law enforcement officers;

(2) Firefighters;

(3) Chaplains;

(4) Members of rescue squads or ambulance crews; and

(5) Disaster relief workers.

Law enforcement means enforcement of the criminal laws, including—

(1) Control or reduction of crime or of juvenile delinquency;

(2) Prosecution or adjudication of individuals who are alleged or found to have violated such laws;

(3) Corrections or detention (in a prison or other detention or confinement facility) of individuals who are alleged or found to have violated such laws; and

(4) Supervision of individuals on parole or probation for having violated such laws.

Line of duty activity or action—Activity or an action is performed in the line of duty, in the case of a public safety officer who is—

(1) A law enforcement officer, a firefighter, or a member of a rescue squad or ambulance crew—

(i) Whose primary function (as applicable) is law enforcement, fire protection, rescue activity, or the provision of emergency medical services, only if, not being described in the Act, at 42 U.S.C. 3796a(1), and not being a frolic or detour, it is activity or an action that he is obligated or authorized by statute, rule, regulation, condition of employment or service, official mutual-aid agreement, or other law, to perform (including any social, ceremonial, or athletic functions (or any training programs) to which he is assigned, or for which he is compensated), under the auspices of the public agency he serves, and such agency (or the relevant government) legally recognizes that activity or action to be so obligated or authorized (or, at a minimum, does not deny (or has not denied) it to be such); or

(ii) Whose primary function is not law enforcement, fire protection, rescue activity, or the provision of emergency medical services, only if, not being described in the Act, at 42 U.S.C. 3796a(1), and not being a frolic or detour—

(A) It is activity or an action that he is obligated or authorized by statute, rule, regulation, condition of employment or service, official mutual-aid agreement, or other law, to perform, under the auspices of the public agency he serves, and such agency (or the relevant government) legally recognizes that activity or action to be so obligated or authorized (or, at a minimum, does not deny (or has not denied) it to be such); and

(B) It is performed (as applicable) in the course of law enforcement, providing fire protection, engaging in rescue activity, providing emergency medical services, or training for one of the foregoing, and such agency (or the relevant government) legally recognizes it as such (or, at a minimum, does not deny (or has not denied) it to be such);

(2) A disaster relief worker, only if, not being described in the Act, at 42 U.S.C. 3796a(1), and not being a frolic or detour, it is disaster relief activity, and the agency he serves (or the relevant government), being described in the Act, at 42 U.S.C. 3796b(9)(B) or (C), legally recognizes it as such (or, at a minimum, does not deny (or has not denied) it to be such); or

(3) A chaplain, only if, not being described in the Act, at 42 U.S.C. 3796a(1), and not being a frolic or detour—

(i) It is activity or an action that he is obligated or authorized by statute, rule, regulation, condition of employment or service, official mutual-aid agreement, or other law, to perform, under the auspices of the public agency he serves, and such agency (or the relevant government) legally recognizes it as such (or, at a minimum, does not deny (or has not denied) it to be such); and

(ii) It is performed in the course of responding to a fire, rescue, or police emergency, and such agency (or the relevant government) legally recognizes it as such (or, at a minimum, does not deny (or has not denied) it to be such).

Line of duty injury—An injury is sustained in the line of duty only if—

(1) It is sustained in the course of—

(i) Performance of line of duty activity or a line of duty action; or

(ii) Authorized commuting; or

(2) Convincing evidence demonstrates that such injury resulted from the injured party's status as a public safety officer.

Mental faculties means brain function.

Natural child—An individual is a natural child of a public safety officer only if he is a biological child of the officer, and the officer is alive at the time of his birth.

Occupational disease means a disease that routinely constitutes a special hazard in, or is commonly regarded as a concomitant of, an individual's occupation.

Official capacity—An individual serves a public agency in an official capacity only if—

(1) He is officially authorized, -recognized, or -designated (by such agency) as functionally within or -part of it; and

(2) His acts and omissions, while so serving, are legally those of such agency, which legally recognizes them as such (or, at a minimum, does not deny (or has not denied) them to be such).

Official duties means duties that are officially authorized, -recognized, or -designated by an employing entity, such that the performance of those duties is legally the action of such entity, which legally recognizes it as such (or, at a minimum, does not deny (or has not denied) it to be such).

Officially recognized or designated member of a department or agency means a member of a department or agency, or of an instrumentality, of a government described in the Act, at 42 U.S.C. 3796b(8), who is officially recognized (or officially designated) as such a member by the same.

Officially recognized or designated public employee of a department or agency means a public employee of a department or agency who is officially recognized (or officially designated) as a public safety officer, by the same.

Officially recognized or designated public employee member of a squad or crew means a public employee member of a squad or crew who is officially recognized (or officially designated) as such a public employee member, by the public agency under whose auspices the squad or crew operates.

OJP means the Office of Justice Programs, U.S. Department of Justice.

Parent means a father or a mother.

Parent-child relationship means a relationship between a public safety officer and another individual, in which the officer has the role of parent (other than biological or legally-adoptive), as shown by convincing evidence.

Performance of duties in a grossly negligent manner at the time of death or catastrophic injury means gross negligence, as of or near the injury date, in the course of authorized commuting or performance of line of duty activity or a line of duty action, where such negligence is a substantial contributing factor in bringing such death or injury about.

Posthumous child—An individual is a posthumous child of a public safety officer only if he is a biological child of the officer, and the officer is—

(1) Alive at the time of his conception; and

(2) Not alive at the time of his birth.

PSOB determining official means, as applicable, any of the following:

(1) The PSOB Office;

(2) The Hearing Officer; or

(3) The Director.

PSOB Office means the unit of BJA that directly administers the Public Safety Officers' Benefits program, except that, with respect to the making of any finding, determination, affirmance, reversal, assignment, authorization, decision, judgment, waiver, or other ruling, it means such unit, acting with the concurrence of OJP's General Counsel.

Public employee means—

(1) An employee of a government described in the Act, at 42 U.S.C. 3796b(8), (or of a department or agency thereof) and whose acts and omissions while so employed are legally those of such government, which legally recognizes them as such (or, at a minimum, does not deny (or has not denied) them to be such); or

(2) An employee of an instrumentality of a government described in the Act, at

42 U.S.C. 3796b(8), who is eligible to receive death or disability benefits from such government on the same basis as an employee of that government (within the meaning of paragraph (1) of this definition) would.

Public employee member of a squad or crew means a member of a squad or crew who is a public employee under the auspices of whose public agency employer the squad or crew operates.

Public employee of a department or agency means a public employee whose public agency employer is the department or agency.

Qualified beneficiary—An individual is a qualified beneficiary under the Act, at 42 U.S.C. 3796c–1 or Public Law 107–37, only if he is an eligible payee—

(1) Who qualifies as a beneficiary pursuant to a determination that—

(i) The requirements of the Act, at 42 U.S.C. 3796(a) or (b) (excluding the limitations relating to appropriations), as applicable, have been met; and

(ii) The provisions of this part, as applicable, relating to payees otherwise have been met; and

(2) Whose actions were not a substantial contributing factor to the death of the public safety officer (with respect to a claim under subpart B of this part).

Representative services include expenses incurred in connection with such services.

Rescue activity means search or rescue assistance in locating or extracting from danger persons lost, missing, or in imminent danger of serious bodily harm.

Rescue squad or ambulance crew means a squad or crew whose members are rescue workers, ambulance drivers, paramedics, health-care responders, emergency medical technicians, or other similar workers, who—

(1) Are trained in rescue activity or the provision of emergency medical services; and

(2) As such members, have the legal authority and -responsibility to—

(i) Engage in rescue activity; or

(ii) Provide emergency medical services.

Spouse means an individual's lawful husband, -wife, -widower, or -widow (*i.e.*, with whom the individual lawfully entered into marriage), and includes a spouse living apart from the individual, other than pursuant to divorce, except that, notwithstanding any other provision of law—

(1) For an individual purporting to be a spouse on the basis of a common-law marriage (or a putative marriage) to be considered a spouse within the meaning of this definition, it is necessary (but not sufficient) for the jurisdiction of domicile of the parties to recognize such individual as the lawful spouse of the other; and

(2) In deciding who may be the spouse of a public safety officer—

(i) The relevant jurisdiction of domicile is the officer's (as of the injury date); and

(ii) With respect to a claim under subpart B of this part, the relevant date is that of the officer's death.

Stepchild—An individual is a stepchild of a public safety officer only if the individual is the legally-adoptive or biological first-generation offspring of a public safety officer's current, deceased, or former spouse, which offspring (not having been legally adopted by the officer)—

(1) Was conceived before the marriage of the officer and the spouse; and

(2) As of the injury date—

(i) Was known by the officer not to be his biological first-generation offspring; and

(ii) After the officer obtained such knowledge—

(A) Received over half of his support from the officer;

(B) Had as his principal place of abode the home of the officer and was a member of the officer's household; or

(C) Was in a parent-child relationship with the officer.

Stress or strain includes physical stress or strain, mental stress or strain, post-traumatic stress disorder, and depression.

Stroke means cerebral vascular accident.

Student means an individual who meets the definition provided in the Act, at 42 U.S.C. 3796b(3)(ii), with respect to an educational/academic institution.

Substantial contributing factor—A factor substantially contributes to a death, injury, or disability, if the factor—

(1) Contributed to the death, injury, or disability to a significant degree; or

(2) Is a substantial factor in bringing the death, injury, or disability about.

Substantial factor—A factor substantially brings about a death, injury, disability, heart attack, or stroke if—

(1) The factor alone was sufficient to have caused the death, injury, disability, heart attack, or stroke; or

(2) No other factor (or combination of factors) contributed to the death, injury, disability, heart attack, or stroke to so great a degree as it did.

Suppression of fire means extinguishment, physical prevention, or containment of fire, including on-site hazard evaluation.

Terrorist attack—An event or act is a terrorist attack within the meaning of the Act, at 42 U.S.C. 3796c–1(a), only if the Attorney General determines that—

(1) There is a reasonable indication that the event or act was (or would be or would have been, with respect to *a priori* prevention or investigation efforts) an act of domestic or international terrorism within the meaning of the criminal terrorism laws, at 18 U.S.C. 2331; and

(2) The event or act (or the circumstances of death or injury) was of such extraordinary or cataclysmic character as to make particularized factual findings impossible, impractical, unnecessary, or unduly burdensome.

Voluntary intoxication at the time of death or catastrophic injury means the following:

(1) With respect to alcohol,

(i) In any claim arising from a public safety officer's death in which the death was simultaneous (or practically simultaneous) with the injury, it means intoxication as defined in the Act, at 42 U.S.C. 3796b(5), unless convincing evidence demonstrates that the officer did not introduce the alcohol into his body intentionally; and

(ii) In any claim not described in paragraph (1)(i) of this definition, unless convincing evidence demonstrates that the officer did not introduce the alcohol into his body intentionally, it means intoxication—

(A) As defined in the Act, at 42 U.S.C. 3796b(5), *mutatis mutandis* (*i.e.*, with ''post-mortem'' (each place it occurs) and ''death'' being substituted, respectively, by ''post-injury'' and ''injury''); and

(B) As of the injury date; and

(2) With respect to drugs or other substances, it means a disturbance of mental or physical faculties resulting from their introduction into the body of a public safety officer, as evidenced by the presence therein, as of the injury date—

(i) Of any controlled substance included on Schedule I of the drug control and enforcement laws (see 21 U.S.C. 812(a)), or any controlled substance included on Schedule II, III, IV, or V of such laws (see 21 U.S.C. 812(a)) and with respect to which there is no therapeutic range or maximum recommended dosage, unless convincing evidence demonstrates that such introduction was not a culpable act of the officer's under the criminal laws; or

(ii) Of any controlled substance included on Schedule II, III, IV, or V of the drug control and enforcement laws (see 21 U.S.C. 812(a)) and with respect to which there is a therapeutic range or maximum recommended dosage—

(A) At levels above or in excess of such range or dosage, unless convincing evidence demonstrates that such introduction was not a culpable act of the officer's under the criminal laws; or

(B) At levels at, below, or within such range or dosage, unless convincing evidence demonstrates that—

(*1*) Such introduction was not a culpable act of the officer's under the criminal laws; or

(*2*) The officer was not acting in an intoxicated manner immediately prior to the injury date.

§ 32.4 Terms; construction, severability.

(a) The first three provisions of 1 U.S.C. 1 (rules of construction) shall apply.

(b) If benefits are denied to any individual pursuant to the Act, at 42 U.S.C. 3796a(4), or otherwise because his actions were a substantial contributing factor to the death of the public safety officer, such individual shall be presumed irrebuttably, for all purposes, not to have survived the officer.

(c) Any provision of this part held to be invalid or unenforceable by its terms, or as applied to any person or circumstance, shall be construed so as to give it the maximum effect permitted by law, unless such holding shall be one of utter invalidity or unenforceability, in which event such provision shall be deemed severable herefrom and shall not affect the remainder hereof or the application of such provision to other persons not similarly situated or to other, dissimilar circumstances.

§ 32.5 Evidence.

(a) Except as otherwise may be expressly provided in the Act or this part, a claimant has the burden of persuasion as to all material issues of fact, and by the standard of proof of ''more likely than not.''

(b) Except as otherwise may be expressly provided in this part, the PSOB determining official may, at his discretion, consider (but shall not be bound by) the factual findings of a public agency.

(c) Rules 401 (relevant evidence), 402 (admissibility), 602 to 604 (witnesses), 701 to 704 (testimony), 901 to 903 (authentication), and 1001 to 1008 (contents of writings, records, and photographs) of the Federal Rules of Evidence shall apply to all filings, hearings, and other proceedings or matters.

(d) In determining a claim, the PSOB determining official may, at his discretion, draw an adverse inference if, without reasonable justification or excuse—

(1) A claimant fails or refuses to file with the PSOB Office—

(i) Such material- or relevant evidence or -information within his possession, control, or ken as may reasonably be requested from time to time by such official; or

(ii) Such authorizations or waivers as may reasonably be requested from time to time by such official to enable him (or to assist in enabling him) to obtain access to material- or relevant evidence or -information of a medical, personnel, financial, or other confidential nature; or

(2) A claimant under subpart C of this part fails or refuses to appear in person—

(i) At his hearing under subpart E of this part (if there be such a hearing); or

(ii) Before such official (or otherwise permit such official personally to observe his condition), at a time and location reasonably convenient to both, as may reasonably be requested by such official.

(e) In determining a claim, the PSOB determining official may, at his discretion, draw an inference of voluntary intoxication at the time of death or catastrophic injury if, without reasonable justification or excuse, appropriate toxicologic analysis (including autopsy, in the event of death) is not performed, and/or the results thereof are not filed with the PSOB Office, where there is credible evidence suggesting that intoxication may have been a factor in the death or injury, or that the public safety officer—

(1) As of or near the injury date, was—

(i) A consumer of alcohol)—

(A) In amounts likely to produce a blood-alcohol level of .10 per centum or greater in individuals similar to the officer in weight and sex; or

(B) In any amount, after ever having been treated at an inpatient facility for alcoholism;

(ii) A consumer of controlled substances included on Schedule I of the drug control and enforcement laws (see 21 U.S.C. 812(a)); or

(iii) An abuser of controlled substances included on Schedule II, III, IV, or V of the drug control and enforcement laws (see 21 U.S.C. 812(a)); or

(2) Immediately prior to the injury date, was under the influence of alcohol or drugs or other substances or otherwise acting in an intoxicated manner.

(f) In determining a claim under the Act, at 42 U.S.C. 3796c–1 or Public Law 107–37, the certification described therein shall constitute *prima facie* evidence—

(1) Of the public agency's acknowledgment that the public safety officer, as of the injury date, was (as applicable)—

(i) A public safety officer of the kind described in the certification;

(ii) Employed by the agency;

(iii) One of the following:

(A) With respect to a law enforcement officer, an officer of the agency;

(B) With respect to a firefighter,

(*1*) An officially recognized or designated member of the agency (if it is a legally organized volunteer fire department); or

(*2*) An employee of the agency;

(C) With respect to a chaplain,

(*1*) An officially recognized or designated member of the agency (if it is a legally organized police or volunteer fire department); or

(*2*) An officially recognized or designated public employee of the agency (if it is a legally organized police or fire department);

(D) With respect to a member of a rescue squad or ambulance crew, an officially recognized or designated public employee member of one of the agency's rescue squads or ambulance crews; or

(E) With respect to a disaster relief worker, an employee of the agency (if it is described in the Act, at 42 U.S.C. 3796b(9)(B) or (C)); and

(iv) Killed (with respect to a claim under subpart B of this part), or totally and permanently disabled (with respect to a claim under subpart C of this part), as a direct and proximate result of a line of duty injury; and

(2) That there are no eligible payees other than those identified in the certification.

§ 32.6 Payment and repayment.

(a) No payment shall be made to (or on behalf of) more than one individual, on the basis of being a particular public safety officer's spouse.

(b) No payment shall be made, save—

(1) To (or on behalf of) a living payee; and

(2) Pursuant to—

(i) A claim filed by (or on behalf of) such payee; and

(ii) Except as provided in the Act, at 42 U.S.C. 3796(c), approval of such claim.

(c) Any amounts that would be paid but for the provisions of paragraph (b) of this section shall be retained by the United States and not paid.

(d) With respect to the amount paid to a payee (or on his behalf) pursuant to a claim, the payee shall repay the following, unless, for good cause shown, the Director grants a full or partial waiver pursuant to the Act, at 42 U.S.C. 3796(m):

(1) The entire amount, if approval of the claim was based, in whole or in material part, on the payee's (or any other person's or entity's) fraud, concealment or withholding of evidence or information, false or inaccurate statements, mistake, wrongdoing, or deception; or

(2) The entire amount subject to divestment, if the payee's entitlement to such payment is divested, in whole or in part, such as by the subsequent discovery of individuals entitled to make equal or superior claims.

(e) At the discretion of the Director, repayment of amounts owing or collectable under the Act or this part may, as applicable, be executed through setoffs against future payments on financial claims under subpart D of this part.

§ 32.7 Fees for representative services.

(a) A person seeking to receive any amount from (or with respect to) a claimant for representative services provided in connection with any claim may petition the PSOB Office for authorization under this section. Such petition shall include—

(1) An itemized description of the services;

(2) The total amount sought to be received, from any source, as consideration for the services;

(3) An itemized description of any representative or other services provided to (or on behalf of) the claimant in connection with other claims or causes of action, unrelated to the Act, before any public agency or non-public entity (including any insurer), arising from the public safety officer's death, disability, or injury;

(4) The total amount requested, charged, received, or sought to be received, from any source, as consideration for the services described in paragraph (a)(3) of this section;

(5) A statement of whether the petitioner has legal training or is licensed to practice law, and a description of any special qualifications possessed by the petitioner (other than legal training or a license to practice law) that increased the value of his services to (or on behalf of) the claimant;

(6) A certification that the claimant was provided, simultaneously with the filing of the petition, with—

(i) A copy of the petition; and

(ii) A letter advising the claimant that he could file his comments on the petition, if any, with the PSOB Office, within thirty-three days of the date of that letter; and

(7) A copy of the letter described in paragraph (a)(6)(ii) of this section.

(b) Unless, for good cause shown, the Director extends the time for filing, no petition under paragraph (a) of this section shall be considered if the petition is filed with the PSOB Office later than one year after the date of the final agency determination of the claim.

(c) Subject to paragraph (d) of this section, an authorization under paragraph (a) of this section shall be based on consideration of the following factors:

(1) The nature of the services provided by the petitioner;

(2) The complexity of the claim;

(3) The level of skill and competence required to provide the petitioner's services;

(4) The amount of time spent on the claim by the petitioner;

(5) The results achieved as a function of the petitioner's services;

(6) The level of administrative or judicial review to which the claim was pursued and the point at which the petitioner entered the proceedings;

(7) The ordinary, usual, or customary fee charged by other persons (and by the petitioner) for services of a similar nature; and

(8) The amount authorized by the PSOB Office in similar cases.

(d) No amount shall be authorized under paragraph (a) of this section for—

(1) Any stipulated-, percentage-, or contingency fee;

(2) Services at a rate in excess of that specified in 5 U.S.C. 504(b)(1)(A)(ii) (Equal Access to Justice Act); or

(3) Services provided in connection with—

(i) Obtaining or providing evidence or information previously obtained by the PSOB determining official;

(ii) Preparing the petition; or

(iii) Explaining or delivering an approved claim to the claimant.

(e) Upon a petitioner's failure (without reasonable justification or excuse) to pursue in timely fashion his filed petition under paragraph (a) of this section, the Director may, at his discretion, deem the same to be abandoned, as though never filed. Not less than thirty-three days prior thereto, the PSOB Office shall serve the petitioner and the claimant with notice of the Director's intention to exercise such discretion.

(f) Upon its authorizing or not authorizing the payment of any amount under paragraph (a) of this section, the PSOB Office shall serve notice of the same upon the claimant and the petitioner. Such notice shall specify the amount, if any, the petitioner is authorized to charge the claimant and the basis of the authorization.

(g) No agreement for representative services in connection with a claim shall be valid if the agreement provides for any consideration other than under this section. A person's receipt of consideration for such services other than under this section may, among other things, be the subject of referral by BJA to appropriate professional, administrative, disciplinary, or other legal authorities.

§ 32.8 Exhaustion of administrative remedies.

No determination or negative disability finding that, at the time made, may be subject to a request for a Hearing Officer determination, a motion for reconsideration, or a Director appeal, shall be considered a final agency determination for purposes of judicial review, unless all administrative remedies have been exhausted.

Subpart B—Death Benefit Claims

§ 32.11 Scope of subpart.

Consistent with § 32.1, this subpart contains provisions applicable to claims made under the Act—

(a) At 42 U.S.C. 3796(a); or

(b) At 42 U.S.C. 3796c–1 or Public Law 107–37, with respect to a public safety officer's death.

§ 32.12 Time for filing claim.

(a) Unless, for good cause shown, the Director extends the time for filing, no claim shall be considered if it is filed with the PSOB Office after the later of—

(1) Three years after the public safety officer's death; or

(2) One year after the receipt or denial of any benefits described in § 32.15(a)(1)(i) (or the receipt of the certification described in § 32.15(a)(1)(ii)).

(b) A claimant may file with his claim such supporting evidence and legal arguments as he may wish to provide.

§ 32.13 Definitions.

Adoptive parent of a public safety officer means any individual who (not being a step-parent), as of the injury date, was the legally-adoptive parent of the public safety officer, or otherwise was in a child-parent relationship with him.

Beneficiary of a life insurance policy of a public safety officer—An individual (living or deceased on the date of death of the public safety officer) is designated as beneficiary of a life insurance policy of such officer as of such date, only if the designation is, as of such date, legal and valid (as a designation of beneficiary of a life insurance policy) and unrevoked (by such officer or by operation of law), except that—

(1) Any designation of an individual (including any designation of the

biological or adoptive offspring of such individual) made in contemplation of such individual's marriage (or purported marriage) to such officer shall be considered to be revoked by such officer as of such date of death if the marriage (or purported marriage)—not having taken place as of such date of death—did not take place when scheduled, unless preponderant evidence demonstrates that—

(i) The alteration in schedule was for reasons other than personal differences between the officer and the individual; or

(ii) No such revocation was intended by the officer; and

(2) Any designation of a spouse (or purported spouse) made in contemplation of or during such spouse's (or purported spouse's) marriage (or purported marriage) to such officer (including any designation of the biological or adoptive offspring of such individual) shall be considered to be revoked by such officer as of such date of death if the spouse (or purported spouse) is divorced from such officer after the date of designation and before such date of death, unless preponderant evidence demonstrates that no such revocation was intended by the officer.

Beneficiary under the Act, at 42 U.S.C. 3796(a)(4)(A)—An individual (living or deceased on the date of death of the public safety officer) is designated, by such officer (and as of such date), as beneficiary under the Act, at 42 U.S.C. 3796(a)(4)(A), only if the designation is, as of such date, legal and valid and unrevoked (by such officer or by operation of law), except that—

(1) Any designation of an individual (including any designation of the biological or adoptive offspring of such individual) made in contemplation of such individual's marriage (or purported marriage) to such officer shall be considered to be revoked by such officer as of such date of death if the marriage (or purported marriage)—not having taken place as of such date of death—did not take place when scheduled, unless preponderant evidence demonstrates that—

(i) The alteration in schedule was for reasons other than personal differences between the officer and the individual; or

(ii) No such revocation was intended by the officer; and

(2) Any designation of a spouse (or purported spouse) made in contemplation of or during such spouse's (or purported spouse's) marriage (or purported marriage) to such officer (including any designation of the biological or adoptive offspring of such spouse (or purported spouse) shall be considered to be revoked by such officer as of such date of death if the spouse (or purported spouse) is divorced from such officer subsequent to the date of designation and before such date of death, unless preponderant evidence demonstrates that no such revocation was intended by the officer.

Cardiovascular disease includes heart attack and stroke.

Child-parent relationship means a relationship between a public safety officer and another individual, in which the individual (other than the officer's biological or legally-adoptive parent) has the role of parent, as shown by convincing evidence.

Circumstances other than engagement or participation means—

(1) An event or events; or

(2) An intentional risky behavior or intentional risky behaviors.

Commonly accepted means generally agreed upon within the medical profession.

Competent medical evidence to the contrary—The presumption raised by the Act, at 42 U.S.C. 3796(k), is overcome by competent medical evidence to the contrary, when evidence indicates to a degree of medical probability that circumstances other than any engagement or participation described in the Act, at 42 U.S.C. 3796(k)(1), considered in combination (as one circumstance) or alone, were a substantial factor in bringing the heart attack or stroke about.

Direct and proximate result of a heart attack or stroke—A death results directly and proximately from a heart attack or stroke if the heart attack or stroke is a substantial factor in bringing it about.

Engagement in a situation—A public safety officer is engaged in a situation only when, within his line of duty—

(1) He is in the course of actually—

(i) Engaging in law enforcement;

(ii) Suppressing fire;

(iii) Responding to a hazardous-materials emergency;

(iv) Performing rescue activity;

(v) Providing emergency medical services; or

(vi) Performing disaster relief activity; or

(vii) Otherwise responding to a fire, rescue, or police emergency; and

(2) The public agency he serves (or the relevant government) legally recognizes him to be in such course (or, at a minimum, does not deny (or has not denied) him so to be).

Event includes occurrence, but does not include any engagement or participation described in the Act, at 42 U.S.C. 3796(k)(1).

Excessive consumption of alcohol—An individual is an excessive consumer of alcohol if he consumes alcohol in amounts commonly accepted to be associated with substantially-increased risk of cardiovascular disease.

Execution of a designation of beneficiary under the Act, at 42 U.S.C. 3796(a)(4)(A) means the legal and valid execution, by the public safety officer, of a writing that, designating a beneficiary, expressly, specifically, or unmistakably refers to—

(1) The Act (or the program it creates); or

(2) All the death benefits with respect to which such officer lawfully could designate a beneficiary (if there be no writing that satisfies paragraph (1) of this definition).

Execution of a life insurance policy means, with respect to a life insurance policy, the legal and valid execution, by the individual whose life is insured thereunder, of—

(1) The approved application for coverage;

(2) A designation of beneficiary; or

(3) A designation of the mode of benefit.

Medical probability—A fact is indicated to a degree of medical probability, when, pursuant to a medical assessment, the fact is indicated by a preponderance of such evidence as may be available.

Most recently executed designation of beneficiary under the Act, at 42 U.S.C. 3796(a)(4)(A) means the most recently executed such designation that, as of the date of death of the public safety officer, designates a beneficiary.

Most recently executed life insurance policy of a public safety officer means the most recently executed policy insuring the life of a public safety officer that, being legal and valid (as a life insurance policy) upon its execution, as of the date of death of such officer—

(1) Designates a beneficiary; and

(2) Remains legally in effect.

Nonroutine strenuous physical activity—Except as excluded by the Act, at 42 U.S.C. 3796(*l*), nonroutine strenuous physical activity means line of duty activity that—

(1) Is not performed as a matter of routine; and

(2) Entails an unusually-high level of physical exertion.

Nonroutine stressful or strenuous physical activity means nonroutine stressful physical activity or nonroutine strenuous physical activity.

Nonroutine stressful physical activity—Except as excluded by the Act, at 42 U.S.C. 3796(*l*), nonroutine stressful physical activity means line of duty activity that—

(1) Is not performed as a matter of routine;

(2) Entails non-negligible physical exertion; and

(3) Occurs—

(i) With respect to a situation in which a public safety officer is engaged, under circumstances that objectively and reasonably—

(A) Pose (or appear to pose) significant dangers, threats, or hazards (or reasonably-foreseeable risks thereof), not faced by similarly-situated members of the public in the ordinary course; and

(B) Provoke, cause, or occasion an unusually-high level of alarm, fear, or anxiety; or

(ii) With respect to a training exercise in which a public safety officer participates, under circumstances that objectively and reasonably—

(A) Simulate in realistic fashion situations that pose significant dangers, threats, or hazards; and

(B) Provoke, cause, or occasion an unusually-high level of alarm, fear, or anxiety.

Parent of a public safety officer means a public safety officer's surviving—

(1) Biological or adoptive parent whose parental rights have not been terminated, as of the injury date; or

(2) Step-parent.

Participation in a training exercise—A public safety officer participates (as a trainer or trainee) in a training exercise only if it is a formal part of an official training program whose purpose is to train public safety officers in, prepare them for, or improve their skills in, particular activity or actions encompassed within their respective lines of duty.

Public safety agency, organization, or unit means a department or agency (or component thereof)—

(1) In which a public safety officer serves in an official capacity, with or without compensation, as such an officer (of any kind but disaster relief worker); or

(2) Of which a public safety officer is an employee, performing official duties as described in the Act, at 42 U.S.C. 3796b(9)(B) or (C), as a disaster relief worker.

Risky behavior means—

(1) Failure (without reasonable justification or excuse) to undertake treatment—

(i) Of any commonly-accepted cardiovascular-disease risk factor associated with clinical values, where such risk factor is—

(A) Known (or should be known) to be present; and

(B) Present to a degree that substantially exceeds the minimum value commonly accepted as indicating high risk;

(ii) Of any disease or condition commonly accepted to be associated with substantially-increased risk of cardiovascular disease, where such associated disease or condition is known (or should be known) to be present; or

(iii) Where a biological parent, -sibling, or -child, is known to have (or have a history of) cardiovascular disease;

(2) Smoking an average of more than one-half of a pack of cigarettes (or its equivalent) per day;

(3) Excessive consumption of alcohol;

(4) Consumption of controlled substances included on Schedule I of the drug control and enforcement laws (see 21 U.S.C. 812(a)), where such consumption is commonly accepted to be associated with increased risk of cardiovascular disease; or

(5) Abuse of controlled substances included on Schedule II, III, IV, or V of the drug control and enforcement laws (see 21 U.S.C. 812(a)), where such abuse is commonly accepted to be associated with increased risk of cardiovascular disease.

Step-parent of a public safety officer means a current or former spouse of the legally-adoptive or biological parent (living or deceased) of a public safety officer conceived (or legally adopted) by that parent before the marriage of the spouse and the parent, which spouse (not being a legally-adoptive parent of the officer), as of the injury date,

(1) Received over half of his support from the officer;

(2) Had as his principal place of abode the home of the officer and was a member of the officer's household; or

(3) Was in a child-parent relationship with the officer.

Undertaking of treatment—An individual undertakes treatment, when he consults with a physician licensed to practice medicine in any jurisdiction described in the Act, at 42 U.S.C. 3796b(8), and complies substantially with his recommendations.

§ 32.14 PSOB Office determination.

(a) Upon its approving or denying a claim, the PSOB Office shall serve notice of the same upon the claimant (and upon any other claimant who may have filed a claim with respect to the same public safety officer). In the event of a denial, such notice shall—

(1) Specify the factual findings and legal conclusions that support it; and

(2) Provide information as to requesting a Hearing Officer determination.

(b) Upon a claimant's failure (without reasonable justification or excuse) to pursue in timely fashion the determination, by the PSOB Office, of his filed claim, the Director may, at his discretion, deem the same to be abandoned. Not less than thirty-three days prior thereto, the PSOB Office shall serve the claimant with notice of the Director's intention to exercise such discretion.

§ 32.15 Prerequisite certification.

(a) Except as provided in the Act, at 42 U.S.C. 3796c–1 or Public Law 107–37, and unless, for good cause shown, the Director grants a waiver, no claim shall be approved unless the following (which shall be necessary, but not sufficient, for such approval) are filed with the PSOB Office:

(1) Subject to paragraph (b) of this section, a certification from the public agency in which the public safety officer served (as of the injury date) that he died as a direct and proximate result of a line of duty injury, and either—

(i) That his survivors (listed by name, address, relationship to him, and amount received) have received (or legally are entitled to receive) the maximum death benefits legally payable by the agency with respect to deaths of public safety officers of his kind, rank, and tenure; or

(ii) Subject to paragraph (c) of this section, that the agency is not legally authorized to pay—

(A) Any benefits described in paragraph (a)(1)(i) of this section, to any person; or

(B) Any benefits described in paragraph (a)(1)(i) of this section, to public safety officers of the kind, rank, and tenure described in such paragraph;

(2) A copy of any rulings made by any public agency that relate to the officer's death; and

(3) A certification from the claimant listing every individual known to him who is or might be the officer's child, spouse, or parent.

(b) The provisions of paragraph (a)(1) of this section shall also apply with respect to every public agency that legally is authorized to pay death benefits with respect to the agency described in that paragraph.

(c) No certification described in paragraph (a)(1)(ii) of this section shall be deemed complete unless it—

(1) Lists every public agency (other than BJA) that legally is authorized to pay death benefits with respect to the certifying agency; or

(2) States that no public agency (other than BJA) legally is authorized to pay death benefits with respect to the certifying agency.

§ 32.16 Payment.

(a) No payment shall be made to (or on behalf of) more than one individual, on the basis of being a public safety

officer's parent as his mother, or on that basis as his father. If more than one parent qualifies as the officer's mother, or as his father, payment shall be made to the one with whom the officer considered himself, as of the injury date, to have the closest relationship, except that any biological or legally-adoptive parent whose parental rights have not been terminated as of the injury date shall be presumed rebuttably to be such one.

(b) Any amount payable with respect to a minor or incompetent shall be paid to his legal guardian, to be expended solely for the benefit of such minor or incompetent.

§ 32.17 Request for Hearing Officer determination.

In order to exhaust his administrative remedies, a claimant seeking relief from the denial of his claim shall request a Hearing Officer determination under subpart E of this part. Consistent with § 32.8, any denial that is not the subject of such a request shall constitute the final agency determination.

Subpart C—Disability Benefit Claims

§ 32.21 Scope of subpart.

Consistent with § 32.1, this subpart contains provisions applicable to claims made under the Act—

(a) At 42 U.S.C. 3796(b); or

(b) At 42 U.S.C. 3796c–1 or Public Law 107–37, with respect to a public safety officer's disability.

§ 32.22 Time for filing claim.

(a) Unless, for good cause shown, the Director extends the time for filing, no claim shall be considered if it is filed with the PSOB Office after the later of—

(1) Three years after the injury date; or

(2) One year after the receipt or denial of any benefits described in § 32.25(a)(1)(i) (or receipt of the certification described in § 32.25(a)(1)(ii)).

(b) A claimant may file with his claim such supporting evidence and legal arguments as he may wish to provide.

§ 32.23 Definitions.

Direct result of an injury—A disability results directly from an injury if the injury is a substantial factor in bringing the disability about.

Gainful work means full-or part-time activity that actually is compensated or commonly is compensated.

Medical certainty—A fact exists to a degree of medical certainty, when, pursuant to a medical assessment, the fact is demonstrated by convincing evidence.

Permanently disabled—An individual is permanently disabled only if there is a degree of medical certainty (given the current state of medicine in the United States) that his disabled condition—

(1) Will progressively deteriorate or remain constant, over his expected lifetime; or

(2) Otherwise has reached maximum medical improvement.

Product of an injury—Permanent and total disability is produced by a catastrophic injury suffered as a direct and proximate result of a personal injury if the disability is a direct result of the personal injury.

Residual functional capacity means that which an individual still is capable of doing, as shown by medical (and, as appropriate, vocational) assessment, despite a disability.

Totally disabled—An individual is totally disabled only if there is a degree of medical certainty (given the current state of medicine in the United States) that his residual functional capacity is such that he cannot perform any gainful work.

§ 32.24 PSOB Office determination.

(a) Upon its approving or denying a claim, the PSOB Office shall serve notice of the same upon the claimant. In the event of a denial, such notice shall—

(1) Specify the factual findings and legal conclusions that support it; and

(2) Provide information as to—

(i) Requesting a Hearing Officer determination; or

(ii) As applicable, moving to reconsider a negative disability finding.

(b) Upon a claimant's failure (without reasonable justification or excuse) to pursue in timely fashion the determination of his filed claim, the Director may, at his discretion, deem the same to be abandoned. Not less than thirty-three days prior thereto, the PSOB Office shall serve the claimant with notice of the Director's intention to exercise such discretion.

§ 32.25 Prerequisite certification.

(a) Except as provided in the Act, at 42 U.S.C. 3796c–1 or Public Law 107–37, and unless, for good cause shown, the Director grants a waiver, no claim shall be approved unless the following (which shall be necessary, but not sufficient, for such approval) are filed with the PSOB Office:

(1) Subject to paragraph (b) of this section, a certification from the public agency in which the public safety officer served (as of the injury date) that he was permanently and totally disabled as a direct result of a line of duty injury, and either—

(i) That he has received (or legally is entitled to receive) the maximum disability benefits (including workers' compensation) legally payable by the agency with respect to disabled public safety officers of his kind, rank, and tenure; or

(ii) Subject to paragraph (c) of this section, that the agency is not legally authorized to pay—

(A) Any benefits described in paragraph (a)(1)(i) of this section, to any person; or

(B) Any benefits described in paragraph (a)(1)(i) of this section, to public safety officers of the kind, rank, and tenure described in such paragraph; and

(2) A copy of—

(i) Each State, local, and federal income tax return filed by or on behalf of the public safety officer from the year before the injury date to the date of determination by the PSOB determining official; and

(ii) Any rulings made by any public agency that relate to the claimed disability.

(b) The provisions of paragraph (a)(1) of this section shall also apply with respect to every public agency that legally is authorized to pay disability benefits with respect to the agency described in that paragraph.

(c) No certification described in paragraph (a)(1)(ii) of this section shall be deemed complete unless it—

(1) Lists every public agency (other than BJA) that legally is authorized to pay disability benefits with respect to the certifying agency; or

(2) States that no public agency (other than BJA) legally is authorized to pay disability benefits with respect to the certifying agency.

§ 32.26 Payment.

The amount payable on a claim shall be the amount payable, as of the injury date, pursuant to the Act, at 42 U.S.C. 3796(b).

§ 32.27 Motion for reconsideration of negative disability finding.

A claimant whose claim is denied in whole or in part on the ground that he has not shown that his claimed disability is total and permanent may move for reconsideration, under § 32.28, of the specific finding as to the total and permanent character of the claimed disability (in lieu of his requesting a Hearing Officer determination with respect to the same).

§ 32.28 Reconsideration of negative disability finding.

(a) Unless, for good cause shown, the Director extends the time for filing, no negative disability finding described in § 32.27 shall be reconsidered if the

motion under that section is filed with the PSOB Office later than thirty-three days after the service of notice of the denial.

(b) Notwithstanding any other provision of this section, no negative disability finding described in § 32.27 shall be reconsidered—

(1) If or after such reconsideration is rendered moot (*e.g.*, by the final denial of the claim on other grounds, without possibility of further administrative or judicial recourse); or

(2) If a request for a Hearing Officer determination has been filed in timely fashion with respect to such finding.

(c) Unless, for good cause shown, the Director grants a waiver, upon the making of a motion under § 32.27, reconsideration of the negative disability finding described in that section shall be stayed for three years. Upon the conclusion of the stay, the claimant shall have not more than six years to file evidence with the PSOB Office in support of his claimed disability.

(d) Upon a claimant's failure (without reasonable justification or excuse) to file in timely fashion evidence pursuant to paragraph (c) of this section, the Director may, at his discretion, deem the motion for reconsideration to be abandoned, as though never filed. Not less than thirty-three days prior thereto, the PSOB Office shall serve the claimant with notice of the Director's intention to exercise such discretion.

(e) No negative disability finding described in § 32.27 shall be reversed unless a copy (which shall be necessary, but not sufficient, for such reversal) of each federal, State, and local income tax return filed by or on behalf of the claimant from the year before the date of the motion for reconsideration under that section to the date of reversal is filed with the PSOB Office.

(f) Upon its affirming or reversing a negative disability finding described in § 32.27, the PSOB Office shall serve notice of the same upon the claimant. In the event of an affirmance, such notice shall—

(1) Specify the factual findings and legal conclusions that support it; and

(2) Provide information as to requesting a Hearing Officer determination of the disability finding.

§ 32.29 Request for Hearing Officer determination.

(a) In order to exhaust his administrative remedies, a claimant seeking relief from the denial of his claim shall request a Hearing Officer determination under subpart E of this part—

(1) Of—

(i) His entire claim, if he has not moved for reconsideration of a negative disability finding under § 32.27; or

(ii) The grounds (if any) of the denial that are not the subject of such motion, if he has moved for reconsideration of a negative disability finding under § 32.27; and

(2) Of a negative disability finding that is affirmed pursuant to his motion for reconsideration under § 32.27.

(b) Consistent with § 32.8, the following shall constitute the final agency determination:

(1) Any denial not described in § 32.27 that is not the subject of a request for a Hearing Officer determination under paragraph (a)(1)(i) of this section;

(2) Any denial described in § 32.27 that is not the subject of a request for a Hearing Officer determination under paragraph (a)(1)(ii) of this section, unless the negative disability finding is the subject of a motion for reconsideration; and

(3) Any affirmance that is not the subject of a request for a Hearing Officer determination under paragraph (a)(2) of this section.

Subpart D—Educational Assistance Benefit Claims

§ 32.31 Scope of subpart.

Consistent with § 32.1, this subpart contains provisions applicable to claims (*i.e.*, threshold claims and financial claims) made under the Act, at 42 U.S.C. 3796d–1.

§ 32.32 Time for filing claim.

(a) Subject to the Act, at 42 U.S.C. 3796d–1(c), and to paragraph (b) of this section, a claim may be filed with the PSOB Office at any time after the injury date.

(b) Unless, for good cause shown, the Director grants a waiver, no financial claim may be filed with the PSOB Office, with respect to a grading period that commences more than six months after the date of filing.

(c) A claimant may file with his claim such supporting evidence and legal arguments as he may wish to provide.

§ 32.33 Definitions.

Application means claim (*i.e.*, a threshold claim or a financial claim).

Assistance means financial assistance.

Child of an eligible public safety officer means the child of a public safety officer, which officer is an eligible public safety officer.

Dependent—An individual is a dependent of an eligible public safety officer, if—

(1) Being a child of the officer, the individual—

(i) Was claimed properly as the officer's dependent (within the meaning of the Internal Revenue Code, at 26 U.S.C. 152) on the officer's federal income-tax return (or could have been claimed if such a return had been required by law)—

(A) For the tax year of (or immediately preceding) either the injury date or the date of the officer's death (with respect to a claim by virtue of such death); or

(B) For the relevant tax year (with respect to a claim by virtue of the officer's disability); or

(ii) Is the officer's posthumous child; or

(2) Being a spouse of the officer at the time of the officer's death or on the date of the officer's totally and permanently disabling injury, the individual received over half of his support from the officer (or had as his principal place of abode the home of the officer and was a member of the officer's household)—

(i) As of either the injury date or the date of the officer's death (with respect to a claim by virtue of such death); or

(ii) In the relevant tax year (with respect to a claim by virtue of the officer's disability).

Educational assistance benefits means benefits specifically to assist in paying educational expenses.

Educational expenses means such of the following as may be in furtherance of the educational, professional, or vocational objective of the program of education that forms the basis of a financial claim:

(1) Tuition and fees, as described in 20 U.S.C. 1087*ll*(1) (higher education assistance);

(2) Reasonable expenses for—

(i) Room and board (if incurred for attendance on at least a half-time basis);

(ii) Books;

(iii) Computer equipment;

(iv) Supplies;

(v) Transportation; and

(3) For attendance on at least a three-quarter-time basis, a standard allowance for miscellaneous personal expenses that is the greater of—

(i) The allowance for such expenses, as established by the eligible educational institution for purposes of financial aid; or

(ii) $200.00 per month.

Eligible dependent means an individual who—

(1) Is a dependent of an eligible public safety officer;

(2) Attends a program of education, as described in the Act, at 42 U.S.C. 3796d–1(a)(1); and

(3) Is otherwise eligible to receive financial assistance pursuant to the Act or this subpart.

Eligible educational expenses means a claimant's educational expenses,

reduced by the amount of educational assistance benefits from non-governmental organizations that the claimant has received or will receive.

Eligible public safety officer means a public safety officer—

(1) With respect to whose death, benefits under subpart B of this part properly have been paid; or

(2) With respect to whose disability, benefits under subpart C of this part properly—

(i) Have been paid; or

(ii) Would have been paid, but for the operation of paragraph (b)(1) of § 32.6.

Financial assistance means financial assistance, as described in the Act, at 42 U.S.C. 3796d–1.

Financial claim means a request for financial assistance, with respect to attendance at a program of education, for a particular grading period.

Financial need—An individual is in financial need for a particular grading period to the extent that the amount of his eligible educational expenses for that period exceed the sum of—

(1) The amount of his educational assistance benefits as described in the Act, at 42 U.S.C. 3796d–1(a)(3)(A); and

(2) His expected family contribution calculated pursuant to 20 U.S.C. 1087nn (higher education assistance).

Funds means financial assistance.

Grading period means the period of attendance (*e.g.*, a semester, a trimester, a quarter) in a program of education, after (or with respect to) which period grades are assigned, units of credit are awarded, or courses are considered completed, as determined by the eligible educational institution.

Prospective financial claim means a financial claim with respect to a grading period that ends after the claim is filed.

Public safety agency means a public agency—

(1) In which a public safety officer serves in an official capacity, with or without compensation, as such an officer (of any kind but disaster relief worker); or

(2) Of which a public safety officer is an employee, performing official duties as described in the Act, at 42 U.S.C. 3796b(9)(B) or (C), as a disaster relief worker.

Retroactive financial claim means a financial claim with respect to a grading period that ends before the claim is filed.

Spouse of an eligible public safety officer at the time of the officer's death or on the date of a totally and permanently disabling injury means the spouse of a public safety officer (which officer is an eligible public safety officer) as of—

(1) The date of the officer's death (with respect to a claim by virtue of such death); or

(2) The injury date (with respect to a claim by virtue of the officer's disability).

Tax Year—With respect to a claim by virtue of an eligible public safety officer's disability, the relevant tax year is—

(1) The tax year of (or immediately preceding) the injury date;

(2) Any tax year during which the program of education that forms the basis of the claim is attended or is pursued;

(3) The tax year immediately preceding the date on which the program of education that forms the basis of the claim commenced (or is to commence); or

(4) The tax year of (or immediately preceding) the officer's death, where the program of education that forms the basis of the claim commenced (or is to commence) after the date of such death.

Threshold claim means a request for determination of general eligibility to receive financial assistance.

§ 32.34 PSOB Office determination.

(a) In the event of the PSOB Office's denying a claim, the notice it serves upon the claimant shall—

(1) Specify the factual findings and legal conclusions that support the denial; and

(2) Provide information as to requesting a Hearing Officer determination.

(b) No financial claim shall be approved, unless the claimant's threshold claim has been approved.

(c) Upon a claimant's failure (without reasonable justification or excuse) to pursue in timely fashion the determination of his filed claim, the Director may, at his discretion, deem the same to be abandoned. Not less than thirty-three days prior thereto, the PSOB Office shall serve the claimant with notice of the Director's intention to exercise such discretion.

§ 32.35 Disqualification.

No claim shall be approved if the claimant is—

(a) In default on any student loan obtained under 20 U.S.C. 1091 (higher education assistance), unless, for good cause shown, the Director grants a waiver; or

(b) Subject to a denial of federal benefits under 21 U.S.C. 862 (drug traffickers and possessors).

§ 32.36 Payment and repayment.

(a) The computation described in the Act, at 42 U.S.C. 3796d–1(a)(2), shall be based on a certification from the eligible educational institution as to the claimant's full-, three-quarter-, half-, or less-than-half-time student status, according to such institution's own academic standards and practices.

(b) No payment shall be made with respect to any grading period that ended before the injury date.

(c) With respect to any financial claim, no amount shall be payable that exceeds the amount of the eligible educational expenses that form the basis of the claim.

(d) In the event that appropriations for a fiscal year are insufficient for full payment of all approved or anticipated financial claims, the following payments shall be made—

(1) The amounts payable on approved prospective financial claims from claimants in financial need, to the extent of such need (if sufficient funds be available therefor), in the order the claims are approved;

(2) All other amounts payable on approved prospective financial claims (in the order the claims are approved), if sufficient funds be available therefor—

(i) After payment of all amounts payable pursuant to paragraph (d)(1) of this section; and

(ii) After making allowance for anticipated amounts payable in the fiscal year pursuant to paragraph (d)(1) of this section; and

(3) The amounts payable on approved retroactive financial claims (in the order the claims are approved), if sufficient funds be available therefor—

(i) After payment of all amounts payable pursuant to paragraphs (d)(1) and (2) of this section; and

(ii) After making allowance for anticipated amounts payable in the fiscal year, pursuant to paragraphs (d)(1) and (2) of this section.

(e) In the event that, at the conclusion of a fiscal year, any amounts remain payable on an approved financial claim, such amounts shall remain payable thereafter until paid (when appropriations be sufficient therefor).

(f) In the event that any amounts remain payable on an approved prospective financial claim after the end of the grading period that forms its basis, such claim shall be deemed an approved retroactive financial claim for purposes of paragraph (d) of this section.

(g) No payment shall be made to (or on behalf of) any individual, on the basis of being a particular living public safety officer's spouse, unless the individual is the officer's spouse on the date of payment.

(h) Unless, for good cause shown, the Director grants a full or partial waiver, a payee shall repay the amount paid to him (or on his behalf) pursuant to a prospective financial claim if, during the grading period that forms its basis—

(1) He fails to maintain satisfactory progress under 20 U.S.C. 1091(c) (higher education assistance);

(2) He fails to maintain the enrollment status described in his claim; or

(3) By his acts or omissions, he is or becomes ineligible for financial assistance.

§ 32.37 Request for Hearing Officer determination.

In order to exhaust his administrative remedies, a claimant seeking relief from the denial of his claim shall request a Hearing Officer determination under subpart E of this part. Consistent with § 32.8, any denial that is not the subject of such a request shall constitute the final agency determination.

Subpart E—Hearing Officer Determinations

§ 32.41 Scope of subpart.

Consistent with § 32.1, this subpart contains provisions applicable to requests for Hearing Officer determination of claims denied under subpart B, C (including affirmances of negative disability findings described in § 32.27), or D of this part.

§ 32.42 Time for filing request for determination.

(a) Unless, for good cause shown, the Director extends the time for filing, no claim shall be determined if the request therefor is filed with the PSOB Office later than thirty-three days after the service of notice of—

(1) The denial (under subpart B, C (except as may be provided in paragraph (a)(2) of this section), or D of this part) of a claim; or

(2) The affirmance (under subpart C of this part) of a negative disability finding described in § 32.27.

(b) A claimant may file with his request for a Hearing Officer determination such supporting evidence and legal arguments as he may wish to provide.

§ 32.43 Appointment and assignment of Hearing Officers.

(a) Pursuant to 42 U.S.C. 3787 (employment and authority of hearing officers), Hearing Officers may be appointed from time to time by the Director, to remain on the roster of such Officers at his pleasure.

(b) Upon the filing of a request for a Hearing Officer determination, the PSOB Office shall assign the claim to a Hearing Officer on the roster; the PSOB Office may assign a particular claim to a specific Hearing Officer if it judges, in its discretion, that his experience or expertise suit him especially for it.

(c) Upon its making the assignment described in paragraph (b) of this section, the PSOB Office shall serve notice of the same upon claimant, with an indication that any evidence or legal argument he wishes to provide is to be filed simultaneously with the PSOB Office and the Hearing Officer.

(d) With respect to an assignment described in paragraph (b) of this section, the Hearing Officer's consideration shall be—

(1) *De novo*, rather than in review of the findings, determinations, affirmances, reversals, assignments, authorizations, decisions, judgments, rulings, or other actions of the PSOB Office; and

(2) Consistent with subpart B, C, or D of this part, as applicable.

(e) OJP's General Counsel shall provide advice to the Hearing Officer as to all questions of law relating to a claim assigned pursuant to paragraph (b) of this section.

§ 32.44 Hearing Officer determination.

(a) Upon his determining a claim, the Hearing Officer shall file notice of the same simultaneously with the Director (for his review under subpart F of this part (in the event of approval)), the PSOB Office, and OJP's General Counsel, which notice shall specify the factual findings and legal conclusions that support it.

(b) Upon a Hearing Officer's denying a claim, the PSOB Office shall serve notice of the same upon the claimant (and upon any other claimant who may have filed a claim with respect to the same public safety officer), which notice shall—

(1) Specify the Hearing Officer's factual findings and legal conclusions that support it; and

(2) Provide information as to Director appeals.

(c) Upon a claimant's failure (without reasonable justification or excuse) to pursue in timely fashion the determination of his claim pursuant to his filed request therefor, the Director may, at his discretion, deem the request to be abandoned, as though never filed. Not less than thirty-three days prior thereto, the PSOB Office shall serve the claimant with notice of the Director's intention to exercise such discretion.

§ 32.45 Hearings.

(a) At the election of a claimant under subpart B or C of this part, the Hearing Officer shall hold a hearing, at a location agreeable to the claimant and the Officer, for the sole purposes of obtaining, consistent with § 32.5(c),

(1) Evidence from the claimant and his fact or expert witnesses; and

(2) Such other evidence as the Hearing Officer, at his discretion, may rule to be necessary or useful.

(b) Unless, for good cause shown, the Director extends the time for filing, no election under paragraph (a) of this section shall be honored if it is filed with the PSOB Office later than ninety days after service of the notice described in § 32.43(c).

(c) Not less than seven days prior to any hearing, the claimant shall file simultaneously with the PSOB Office and the Hearing Officer a list of all expected fact or expert witnesses and a brief summary of the evidence each witness is expected to provide.

(d) At any hearing, the Hearing Officer—

(1) May exclude any evidence whose probative value is substantially outweighed by considerations of undue delay, waste of time, or needless presentation of cumulative evidence; and

(2) Shall exclude witnesses (other than the claimant, or any person whose presence is shown by the claimant to be essential to the presentation of his claim), so that they cannot hear the testimony of other witnesses.

(e) Each hearing shall be recorded, and the original of the complete record or transcript thereof shall be made a part of the claim file.

(f) Unless, for good cause shown, the Director grants a waiver, a claimant's failure to appear at a hearing (in person or through a representative) shall constitute a withdrawal of his election under paragraph (a) of this section.

(g) Upon a claimant's failure to pursue in timely fashion his filed election under paragraph (a) of this section, the Director may, at his discretion, deem the same to be abandoned. Not less than thirty-three days prior thereto, the PSOB Office shall serve the claimant with notice of the Director's intention to exercise such discretion.

§ 32.46 Director appeal.

(a) In order to exhaust his administrative remedies, a claimant seeking relief from the denial of his claim shall appeal to the Director under subpart F of this part.

(b) Consistent with § 32.8, any claim denial that is not appealed to the Director under paragraph (a) of this section shall constitute the final agency determination, unless the denial is reviewed otherwise under subpart F of this part.

Subpart F—Director Appeals and Reviews

§ 32.51 Scope of subpart.

Consistent with § 32.1, this subpart contains provisions applicable to Director appeals and reviews of claim approvals and denials made under subpart E of this part, and reviews of claim approvals under the Act, at 42 U.S.C. 3796c–1 or Public Law 107–37.

§ 32.52 Time for filing Director appeal.

(a) Unless, for good cause shown, the Director extends the time for filing, no Director appeal shall be considered if it is filed with the PSOB Office later than thirty-three days after the service of notice of the denial (under subpart E of this part) of a claim.

(b) A claimant may file with his Director appeal such supporting evidence and legal arguments as he may wish to provide.

§ 32.53 Review.

(a) Upon the filing of the approval (under subpart E of this part) of a claim, the Director shall review the same.

(b) The Director may review—

(1) Any claim denial made under subpart E of this part; and

(2) Any claim approval made under the Act, at 42 U.S.C. 3796c–1 or Public Law 107–37.

(c) Unless the Director judges that it would be unnecessary, the PSOB Office shall serve notice upon the claimant (and upon any other claimant who may have filed a claim with respect to the same public safety officer) of the initiation of a review under paragraph (a) or (b) of this section. Unless the Director judges that it would be unnecessary, such notice shall—

(1) Indicate the principal factual findings or legal conclusions at issue; and

(2) Offer a reasonable opportunity for filing of evidence or legal arguments.

§ 32.54 Director determination.

(a) Upon the Director's approving or denying a claim, the PSOB Office shall serve notice of the same simultaneously upon the claimant (and upon any other claimant who may have filed a claim with respect to the same public safety officer), and upon any Hearing Officer who made a determination with respect to the claim. In the event of a denial, such notice shall—

(1) Specify the factual findings and legal conclusions that support it; and

(2) Provide information as to judicial appeals (for the claimant or claimants).

(b) Upon a claimant's failure (without reasonable justification or excuse) to pursue in timely fashion the determination of his claim pursuant to his filed Director appeal, the Director may, at his discretion, deem the same to be abandoned, as though never filed. Not less than thirty-three days prior thereto, the PSOB Office shall serve the claimant with notice of the Director's intention to exercise such discretion.

§ 32.55 Judicial appeal.

(a) A claimant seeking relief from the denial of his claim may appeal judicially under 28 U.S.C. 1491(a) (claims against the United States).

(b) Consistent with § 32.8, any approval or denial described in § 32.54(a) shall constitute the final agency determination.

Regina B. Schofield,

Assistant Attorney General.

[FR Doc. 06–6783 Filed 8–9–06; 8:45 am]

BILLING CODE 4410–18–P

Federal Register

Thursday,
August 10, 2006

Part VI

Department of Defense

Department of the Army

32 CFR Part 505
The Army Privacy Program; Final Rule

DEPARTMENT OF DEFENSE

Department of the Army

32 CFR Part 505

RIN 0702–AA53

[Docket No. USA–2006–0011]

The Army Privacy Program

AGENCY: Department of the Army, DoD.

ACTION: Final rule.

SUMMARY: The Department of the Army is updating policies and responsibilities for the Army Privacy Program, which implements the Privacy Act of 1974, by showing organizational realignments and by revising referenced statutory and regulatory authority, such as the Health Insurance Portability and Accountability Act and E-Government Act of 2002. This rule finalizes the proposed rule that was published in the **Federal Register** on April 25, 2006.

DATES: *Effective Date:* September 11, 2006.

ADDRESSES: U.S. Army Records Management and Declassification Agency, Freedom of Information and Privacy Office, 7701 Telegraph Road, Casey Bldg., Suite 144, Alexandria, VA 22315–3905.

FOR FURTHER INFORMATION CONTACT: Ms. Janice Thornton at (703) 428–6503.

SUPPLEMENTARY INFORMATION:

A. Background

In the April 25, 2006, issue of the **Federal Register** (71 FR 24494), the Department of the Army issued a proposed rule to revise 32 CFR part 505. It incorporates Privacy Act policy objectives to include (1) restricting disclosure of personally identifiable records maintained; (2) to grant individuals rights of access to agency records maintained on themselves; (3) to grant individuals the right to seek amendment of agency records maintained on themselves upon a showing that the records are not accurate, relevant, timely, or complete; and (4) to establish practices ensuring the Army is complying with statutory norms for collection, maintenance, and dissemination of records. The Department of the Army received two comments from one commenter. No substantive changes were requested or made; however, the proposed changes were accepted and made to the final rule. The commenter expressed concern on § 505–2(e) titled ''Nomination of individuals when personal information * * *'' It was changed to read ''Notification of individuals when personal information * * *'' The other concern was in § 505.2(a)(2), suggestion was made to clarify the section by incorporating the DoD 6025.18–R, Privacy of Individually Identifiable Health Information in DoD Health Care Programs, language. The proposed § 505.2 (a)(3) through § 505.2(a)(13) was redesignated as § 505.2(a) (4) through § 505.2(a)(14) and a new § 505.2(a)(3) was added.

B. Executive Order 12866 (Regulatory Planning and Review)

It has been determined that Privacy Act rules for the Department of Defense are not significant rules. The rules do not (1) have an annual effect on the economy of $100 million or more or adversely affect in a material way the economy; a sector of the economy; productivity; competition; jobs; the environment; public health or safety; or State, local, or tribal governments or communities; (2) create a serious inconsistency or otherwise interfere with an action taken or planned by another Agency; (3) materially alter the budgetary impact of entitlements, grants, user fees, or loan programs, or the rights and obligations of recipients thereof; or (4) raise novel legal or policy issues arising out of legal mandates, the President's priorities, or the principles set forth in this Executive order.

C. Regulatory Flexibility

It has been certified that Privacy Act rules for the Department of Defense do not have significant economic impact on a substantial number of small entities because they are concerned only with the administration of Privacy Act systems of records within the Department of Defense.

D. Paperwork Reduction Act

It has been certified that Privacy Act rules for the Department of Defense impose no information requirements beyond the Department of Defense and that the information collected within the Department of Defense is necessary and consistent with 5 U.S.C. 552a, known as the Privacy Act of 1974.

E. Unfunded Mandates Reform Act

It has been certified that the Privacy Act rulemaking for the Department of Defense does not involve a Federal mandate that may result in the expenditure by State, local and tribal governments, in the aggregate, or by the private sector, of $100 million or more and that such rulemaking will not significantly or uniquely affect small governments.

F. Executive Order 13132 (Federalism)

It has been certified that the Privacy Act rules for the Department of Defense do not have federalism implications. The rules do not have substantial direct effects on the States, on the relationship between the National Government and the States, or on the distribution of power and responsibilities among the various levels of government.

Robert Dickerson,

Chief, U.S. Army Freedom of Information Act and Privacy Office.

List of Subjects in 32 CFR Part 505

Privacy.

■ For reasons stated in the preamble the Department of the Army revises 32 CFR part 505 to read as follows:

PART 505—ARMY PRIVACY ACT PROGRAM

Sec.

505.1 General information.
505.2 General provisions.
505.3 Privacy Act systems of records.
505.4 Collecting personal information.
505.5 Individual access to personal information.
505.6 Amendment of records.
505.7 Disclosure of personal information to other agencies and third parties.
505.8 Training requirements.
505.9 Reporting requirements.
505.10 Use and establishment of exemptions.
505.11 **Federal Register** publishing requirements.
505.12 Privacy Act enforcement actions.
505.13 Computer Matching Agreement Program.
505.14 Recordkeeping requirements under the Privacy Act.
Appendix A to Part 505—References
Appendix B to Part 505—Denial Authorities for Records Under Their Authority (Formerly Access and Amendment Refusal Authorities)
Appendix C to Part 505—Privacy Act Statement Format
Appendix D to Part 505—Exemptions; Exceptions; and DoD Blanket Routine Uses
Appendix E to Part 505—Litigation Status Sheet
Appendix F to Part 505—Example of a System of Records Notice
Appendix G to Part 505—Management Control Evaluation Checklist
Appendix H to Part 505—Definitions

Authority: Pub. L. 93–579, 88 Stat. 1896 (5 U.S.C. 552a).

§ 505.1 General information.

(a) *Purpose.* This part sets forth policies and procedures that govern personal information maintained by the Department of the Army (DA) in Privacy Act systems of records. This part also provides guidance on collecting and disseminating personal information in

general. The purpose of the Army Privacy Act Program is to balance the government's need to maintain information about individuals with the right of individuals to be protected against unwarranted invasions of their privacy stemming from Federal agencies' collection, maintenance, use and disclosure of personal information about them. Additionally, this part promotes uniformity within the Army's Privacy Act Program.

(b) *References:* (1) Referenced publications are listed in Appendix A of this part.

(2) DOD Computer Matching Program and other Defense Privacy Guidelines may be accessed at the Defense Privacy Office Web site *http://www.defenselink.mil/privacy.*

(c) Definitions are provided at Appendix H of this part.

(d) *Responsibilities.* (1) The Office of the Administrative Assistant to the Secretary of the Army will—

(i) Act as the senior Army Privacy Official with overall responsibility for the execution of the Department of the Army Privacy Act Program;

(ii) Develop and issue policy guidance for the program in consultation with the Army General Counsel; and

(iii) Ensure the DA Privacy Act Program complies with Federal statutes, Executive Orders, Office of Management and Budget guidelines, and 32 CFR part 310.

(2) The Chief Attorney, Office of the Administrative Assistant to the Secretary of the Army (OAASA) will—

(i) Provide advice and assistance on legal matters arising out of, or incident to, the administration of the DA Privacy Act Program;

(ii) Serve as the legal advisor to the DA Privacy Act Review Board. This duty may be fulfilled by a designee in the Chief Attorney and Legal Services Directorate, OAASA;

(iii) Provide legal advice relating to interpretation and application of the Privacy Act of 1974; and

(iv) Serve as a member on the Defense Privacy Board Legal Committee. This duty may be fulfilled by a designee in the Chief Attorney and Legal Services Directorate, OAASA.

(3) The Judge Advocate General will serve as the Denial Authority on requests made pursuant to the Privacy Act of 1974 for access to or amendment of Army records, regardless of functional category, concerning actual or potential litigation in which the United States has an interest.

(4) The Chief, DA Freedom of Information Act and Privacy Office (FOIA/P), U.S. Army Records Management and Declassification Agency will—

(i) Develop and recommend policy;

(ii) Execute duties as the Army's Privacy Act Officer;

(iii) Promote Privacy Act awareness throughout the DA;

(iv) Serve as a voting member on the Defense Data Integrity Board and the Defense Privacy Board;

(v) Represent the Department of the Army in DOD policy meetings; and

(vi) Appoint a Privacy Act Manager who will—

(A) Administer procedures outlined in this part;

(B) Review and approve proposed new, altered, or amended Privacy Act systems of records notices and subsequently submit them to the Defense Privacy Office for coordination;

(C) Review Department of the Army Forms for compliance with the Privacy Act and this part;

(D) Ensure that reports required by the Privacy Act are provided upon request from the Defense Privacy Office;

(E) Review Computer Matching Agreements and recommend approval or denial to the Chief, DA FOIA/P Office;

(F) Provide Privacy Act training;

(G) Provide privacy guidance and assistance to DA activities and combatant commands where the Army is the Executive Agent;

(H) Ensure information collections are developed in compliance with the Privacy Act provisions;

(I) Ensure Office of Management and Budget reporting requirements, guidance, and policy are accomplished; and

(J) Immediately review privacy violations of personnel to locate the problem and develop a means to prevent recurrence of the problem.

(5) Heads of Department of the Army activities, field-operating agencies, direct reporting units, Major Army commands, subordinate commands down to the battalion level, and installations will—

(i) Supervise and execute the privacy program in functional areas and activities under their responsibility; and

(ii) Appoint a Privacy Act Official who will—

(A) Serve as the staff advisor on privacy matters;

(B) Ensure that Privacy Act records collected and maintained within the Command or agency are properly described in a Privacy Act system of records notice published in the **Federal Register**;

(C) Ensure no undeclared systems of records are being maintained;

(D) Ensure Privacy Act requests are processed promptly and responsively;

(E) Ensure a Privacy Act Statement is provided to individuals when information is collected that will be maintained in a Privacy Act system of records, regardless of the medium used to collect the personal information (i.e., forms, personal interviews, stylized formats, telephonic interviews, or other methods);

(F) Review, biennially, recordkeeping practices to ensure compliance with the Act, paying particular attention to the maintenance of automated records. In addition, ensure cooperation with records management officials on such matters as maintenance and disposal procedures, statutory requirements, forms, and reports; and

(G) Review, biennially Privacy Act training practices. This is to ensure all personnel are familiar with the requirements of the Act.

(6) DA Privacy Act System Managers and Developers will—

(i) Ensure that appropriate procedures and safeguards are developed, implemented, and maintained to protect an individual's personal information;

(ii) Ensure that all personnel are aware of their responsibilities for protecting personal information being collected and maintained under the Privacy Act Program;

(iii) Ensure official filing systems that retrieve records by name or other personal identifier and are maintained in a Privacy Act system of records have been published in the **Federal Register** as a Privacy Act system of records notice. Any official who willfully maintains a system of records without meeting the publication requirements, as prescribed by 5 U.S.C. 552a, as amended, OMB Circular A–130, 32 CFR part 310 and this part, will be subject to possible criminal penalties and/or administrative sanctions;

(iv) Prepare new, amended, or altered Privacy Act system of records notices and submit them to the DA Freedom of Information and Privacy Office for review. After appropriate coordination, the system of records notices will be submitted to the Defense Privacy Office for their review and coordination;

(v) Review, biennially, each Privacy Act system of records notice under their purview to ensure that it accurately describes the system of records;

(vi) Review, every four years, the routine use disclosures associated with each Privacy Act system of records notice in order to determine if such routine use continues to be compatible with the purpose for which the activity collected the information;

(vii) Review, every four years, each Privacy Act system of records notice for which the Secretary of the Army has

promulgated exemption rules pursuant to Sections (j) or (k) of the Act. This is to ensure such exemptions are still appropriate;

(viii) Review, every year, contracts that provide for the maintenance of a Privacy Act system of records to accomplish an activity's mission. This requirement is to ensure each contract contains provisions that bind the contractor, and its employees, to the requirements of 5 U.S.C. 552a(m)(1); and

(ix) Review, if applicable, ongoing Computer Matching Agreements. The Defense Data Integrity Board approves Computer Matching Agreements for 18 months, with an option to renew for an additional year. This additional review will ensure that the requirements of the Privacy Act, Office of Management and Budget guidance, local regulations, and the requirements contained in the Matching Agreements themselves have been met.

(7) All DA personnel will—

(i) Take appropriate actions to ensure personal information contained in a Privacy Act system of records is protected so that the security and confidentiality of the information is preserved;

(ii) Not disclose any personal information contained in a Privacy Act system of records except as authorized by 5 U.S.C. 552a, DOD 5400.11–R, or other applicable laws. Personnel willfully making a prohibited disclosure are subject to possible criminal penalties and/or administrative sanctions; and

(iii) Report any unauthorized disclosures or unauthorized maintenance of new Privacy Act systems of records to the applicable activity's Privacy Act Official.

(8) Heads of Joint Service agencies or commands for which the Army is the Executive Agent or the Army otherwise provides fiscal, logistical, or administrative support, will adhere to the policies and procedures in this part.

(9) Commander, Army and Air Force Exchange Service, will supervise and execute the Privacy Program within that command pursuant to this part.

(10) Overall Government-wide responsibility for implementation of the Privacy Act is the Office of Management and Budget. The Department of Defense is responsible for implementation of the Act within the armed services. The Privacy Act also assigns specific Government-wide responsibilities to the Office of Personnel Management and the General Services Administration.

(11) Government-wide Privacy Act systems of records notices are available at *http://www.defenselink.mil/privacy.*

(e) *Legal Authority.* (1) Title 5, United States Code, Section 552a, as amended, The Privacy Act of 1974.

(2) Title 5, United States Code, Section 552, The Freedom of Information Act (FOIA).

(3) Office of Personnel Management, Federal Personnel Manual (5 CFR parts 293, 294, 297, and 7351).

(4) OMB Circular No. A–130, Management of Federal Information Resources, Revised, August 2003.

(5) DOD Directive 5400.11, Department of Defense Privacy Program, November 16, 2004.

(6) DOD Regulation 5400.11–R, Department of Defense Privacy Program, August 1983.

(7) Title 10, United States Code, Section 3013, Secretary of the Army.

(8) Executive Order No. 9397, Numbering System for Federal Accounts Relating to Individual Persons, November 30, 1943.

(9) Public Law 100–503, the Computer Matching and Privacy Act of 1974.

(10) Public Law 107–347, Section 208, Electronic Government (E-Gov) Act of 2002.

(11) DOD Regulation 6025.18–R, DOD Health Information Privacy Regulation, January 24, 2003.

§ 505.2 General provisions.

(a) *Individual privacy rights policy.* Army policy concerning the privacy rights of individuals and the Army's responsibilities for compliance with the Privacy Act are as follows—

(1) Protect the privacy of United States living citizens and aliens lawfully admitted for permanent residence from unwarranted intrusion.

(2) Deceased individuals do not have Privacy Act rights, nor do executors or next-of-kin in general. However, immediate family members may have limited privacy rights in the manner of death details and funeral arrangements of the deceased individual. Family members often use the deceased individual's Social Security Number (SSN) for federal entitlements; appropriate safeguards must be implemented to protect the deceased individual's SSN from release. Also, the Health Insurance Portability and Accountability Act extends protection to certain medical information contained in a deceased individual's medical records.

(3) Personally identifiable health information of individuals, both living and deceased, shall not be used or disclosed except for specifically permitted purposes.

(4) Maintain only such information about an individual that is necessary to accomplish the Army's mission.

(5) Maintain only personal information that is timely, accurate, complete, and relevant to the collection purpose.

(6) Safeguard personal information to prevent unauthorized use, access, disclosure, alteration, or destruction.

(7) Maintain records for the minimum time required in accordance with an approved National Archives and Records Administration record disposition.

(8) Let individuals know what Privacy Act records the Army maintains by publishing Privacy Act system of records notices in the **Federal Register**. This will enable individuals to review and make copies of these records, subject to the exemptions authorized by law and approved by the Secretary of the Army. Department of the Army Privacy Act systems of records notices are available at *http://www.defenselink.mil/privacy.*

(9) Permit individuals to correct and amend records about themselves which they can prove are factually in error, not timely, not complete, not accurate, or not relevant.

(10) Allow individuals to request an administrative review of decisions that deny them access to or the right to amend their records.

(11) Act on all requests promptly, accurately, and fairly.

(12) Keep paper and electronic records that are retrieved by name or personal identifier only in approved Privacy Act systems of records.

(13) Maintain no records describing how an individual exercises his or her rights guaranteed by the First Amendment (freedom of religion, freedom of political beliefs, freedom of speech and press, freedom of peaceful assemblage, and petition) unless expressly authorized by statute, pertinent to and within the scope of an authorized law enforcement activity, or otherwise authorized by law or regulation.

(14) Maintain appropriate administrative technical and physical safeguards to ensure records are protected from unauthorized alteration or disclosure.

(b) *Safeguard personal information.* (1) Privacy Act data will be afforded reasonable safeguards to prevent inadvertent or unauthorized disclosure of records during processing, storage, transmission, and disposal.

(2) Personal information should never be placed on shared drives that are accessed by groups of individuals unless each person has an ''official need to know'' the information in the performance of official duties.

(3) Safeguarding methods must strike a balance between the sensitivity of the data, need for accuracy and reliability for operations, general security of the area, and cost of the safeguards. In some situations, a password may be enough protection for an automated system with a log-on protocol. For additional guidance on safeguarding personal information in automated records see AR 380–67, The Department of the Army Personnel Security Program.

(c) *Conveying privacy protected data electronically via e-mail and the World Wide Web.* (1) Unencrypted electronic transmission of privacy protected data makes the Army vulnerable to information interception which can cause serious harm to the individual and the accomplishment of the Army's mission.

(2) The Privacy Act requires that appropriate technical safeguards be established, based on the media (*e.g.*, paper, electronic) involved, to ensure the security of the records and to prevent compromise or misuse during transfer.

(3) Privacy Web sites and hosted systems with privacy-protected data will employ secure sockets layers (SSL) and Public Key Infrastructure (PKI) encryption certificates or other DoD-approved commercially available certificates for server authentication and client/server authentication. Individuals who transmit data containing personally identifiable information over e-mail will employ PKI or other DoD-approved certificates.

(4) When sending Privacy Act protected information within the Army using encrypted or dedicated lines, ensure that—

(i) There is an ''official need to know'' for each addressee (including ''cc'' addressees); and

(ii) The Privacy Act protected information is marked For Official Use Only (FOUO) to inform the recipient of limitations on further dissemination. For example, add FOUO to the beginning of an e-mail message, along with the following language: ''This contains FOR OFFICIAL USE ONLY (FOUO) information which is protected under the Privacy Act of 1974 and AR 340–21, The Army Privacy Program. Do not further disseminate this information without the permission of the sender.''

(iii) Do not indiscriminately apply this statement. Use it only in situations when actually transmitting protected Privacy Act information.

(iv) For additional information about marking documents ''FOUO'' review AR 25–55, Chapter IV.

(5) Add appropriate ''Privacy and Security Notices'' at major Web site entry points. Refer to AR 25–1, para 6–4n for requirements for posting ''Privacy and Security Notices'' on public Web sites. Procedures related to the establishing, operating, and maintaining of unclassified DA Web sites can be accessed at *http://www.defenselink.mil/webmasters/policy/DOD_web_policy.*

(6) Ensure public Web sites comply with policies regarding restrictions on persistent and third party cookies. The Army prohibits both persistent and third part cookies. (see AR 25–1, para 6–4n)

(7) A Privacy Advisory is required on Web sites which host information systems soliciting personally identifying information, even when not maintained in a Privacy Act system of records. The Privacy Advisory informs the individual why the information is solicited and how it will be used. Post the Privacy Advisory to the Web site page where the information is being solicited, or to a well marked hyperlink stating ''Privacy Advisory—Please refer to the Privacy and Security Notice that describes why this information is collected and how it will be used.''

(d) *Protecting records containing personal identifiers such as names and Social Security Numbers.* (1) Only those records covered by a Privacy Act system of records notice may be arranged to permit retrieval by a personal identifier (e.g., an individual's name or Social Security Number). AR 25–400–2, paragraph 6–2 requires all records covered by a Privacy Act system of records notice to include the system of record identification number on the record label to serve as a reminder that the information contained within must be safeguarded.

(2) Use a coversheet or DA Label 87 (For Official Use Only) for individual records not contained in properly labeled file folders or cabinets.

(3) When developing a coversheet, the following is an example of a statement that you may use: ''The information contained within is FOR OFFICIAL USE ONLY (FOUO) and protected by the Privacy Act of 1974.''

(e) *Notification of Individuals when personal information is lost, stolen, or compromised.* (1) Whenever an Army organization becomes aware the protected personal information pertaining to a Service member, civilian employee (appropriated or non-appropriated fund), military retiree, family member, or another individual affiliated with Army organization (e.g., volunteer) has been lost, stolen, or compromised, the organization shall inform the affected individuals as soon as possible, but not later than ten days after the loss or compromise of protected personal information is discovered.

(2) At a minimum, the organization shall advise individuals of what specific data was involved; the circumstances surrounding the loss, theft, or compromise; and what protective actions the individual can take.

(3) If Army organizations are unable to comply with policy, they will immediately notify their superiors, who will submit a memorandum through the chain of command to the Administrative Assistant of the Secretary of the Army to explain why the affected individuals or population's personal information has been lost, stolen, or compromised.

(4) This policy is also applicable to Army contractors who collect, maintain, use, or disseminate protected personal information on behalf of the organization.

(f) *Federal government contractors' compliance.* (1) When a DA activity contracts for the design, development, or operation of a Privacy Act system of records in order to accomplish a DA mission, the agency must apply the requirements of the Privacy Act to the contractor and its employees working on the contract (See 48 CFR part 24 and other applicable supplements to the FAR; 32 CFR part 310).

(2) System Managers will review annually, contracts contained within the system(s) of records under their responsibility, to determine which ones contain provisions relating to the design, development, or operation of a Privacy Act system of records.

(3) Contractors are considered employees of the Army for the purpose of the sanction provisions of the Privacy Act during the performance of the contract requirements.

(4) Disclosing records to a contractor for use in performing the requirements of an authorized DA contract is considered a disclosure within the agency under exception (b)(1), ''Official Need to Know'', of the Act.

§ 505.3 Privacy Act systems of records.

(a) *Systems of records.* (1) A system of records is a group of records under the control of a DA activity that are retrieved by an individual's name or by some identifying number, symbol, or other identifying particular assigned to an individual.

(2) Privacy Act systems of records must be—

(i) Authorized by Federal statute or an Executive Order;

(ii) Needed to carry out DA's mission; and

(iii) Published in the **Federal Register** in a system of records notice, which will provide the public an opportunity to

comment before DA implements or changes the system.

(3) The mere fact that records are retrievable by a name or personal identifier is not enough. Records must actually be retrieved by a name or personal identifier. Records in a group of records that may be retrieved by a name or personal identifier but are not normally retrieved by this method are not covered by this part. However, they are covered by AR 25–55, the Department of the Army Freedom of Information Act Program.

(4) The existence of a statute or Executive Order mandating the maintenance of a system of records to perform an authorized activity does not abolish the responsibility to ensure the information in the system of records is relevant and necessary to perform the authorized activity.

(b) *Privacy Act system of records notices.* (1) DA must publish notices in the **Federal Register** on new, amended, altered, or deleted systems of records to inform the public of the Privacy Act systems of records that it maintains. The Privacy Act requires submission of new or significantly changed systems of records to OMB and both houses of Congress before publication in the **Federal Register** (See Appendix E of this part).

(2) Systems managers must send a proposed notice at least 120 days before implementing a new, amended or altered system to the DA Freedom of Information and Privacy Office. The proposed or altered notice must include a narrative statement and supporting documentation. A narrative statement must contain the following items:

(i) System identifier and name;

(ii) Responsible Official, title, and phone number;

(iii) If a new system, the purpose of establishing the system or if an altered system, nature of changes proposed;

(iv) Authority for maintenance of the system;

(v) Probable or potential effects of the system on the privacy of individuals;

(vi) Whether the system is being maintained, in whole or in part, by a contractor;

(vii) Steps taken to minimize risk of unauthorized access;

(viii) Routine use compatibility;

(ix) Office of Management and Budget information collection requirements; and

(x) Supporting documentation as an attachment. Also as an attachment should be the proposed new or altered system notice for publication in the **Federal Register**.

(3) An amended or altered system of records is one that has one or more of the following:

(i) A significant increase in the number, type, or category of individuals about whom records are maintained;

(ii) A change that expands the types of categories of information maintained;

(iii) A change that alters the purpose for which the information is used;

(iv) A change to equipment configuration (either hardware or software) that creates substantially greater access to the records in the system of records;

(v) An addition of an exemption pursuant to Section (j) or (k) of the Act; or

(vi) An addition of a routine use pursuant to 5 U.S.C. 552a(b)(3).

(4) For additional guidance contact the DA FOIA/P Office.

(5) On behalf of DA, the Defense Privacy Office maintains a list of DOD Components' Privacy Act system of records notices at the Defense Privacy Office's Web site *http://www.defenselink.mil/privacy.*

(6) DA PAM 25–51 sets forth procedures pertaining to Privacy Act system of records notices.

(7) For new systems, system managers must establish appropriate administrative, technical, and physical safeguards to ensure the security and confidentiality of records. This applies to all new systems of records whether maintained manually or automated.

(i) One safeguard plan is the development and use of a Privacy Impact Assessment (PIA) mandated by the E-Gov Act of 2002, Section 208. The Office of Management and Budget specifically directs that a PIA be conducted, reviewed, and published for all new or significantly altered information in identifiable form collected from or about the members of the public. The PIA describes the appropriate administrative, technical, and physical safeguards for new automated systems. This will assist in the protection against any anticipated threats or hazards to the security or integrity of data, which could result in substantial harm, embarrassment, inconvenience, or unfairness to any individual on whom information is maintained. Contact your local Information Officer for guidance on conducting a PIA.

(ii) The development of appropriate safeguards must be tailored to the requirements of the system as well as other factors, such as the system environment, location, and accessibility.

§ 505.4 Collecting personal information.

(a) *General provisions.* (1) Employees will collect personal information to the greatest extent practicable directly from the subject of the record. This is especially critical, if the information may result in adverse determinations about an individual's rights, benefits, and privileges under federal programs (*See* 5 U.S.C. 552a(e)(2)).

(2) It is unlawful for any Federal, State, or local government agency to deny anyone a legal right, benefit, or privilege provided by law for refusing to give their SSN unless the law requires disclosure, or a law or regulation adopted before January 1, 1975, required the SSN or if DA uses the SSN to verify a person's identity in a system of records established and in use before that date. Executive Order 9397 (issued prior to January 1, 1975) authorizes the Army to solicit and use the SSN as a numerical identifier for individuals in most federal records systems. However, the SSN should only be collected as needed to perform official duties. Executive Order 9397 does not mandate the solicitation of SSNs from Army personnel as a means of identification.

(3) Upon entrance into military service or civilian employment with DA, individuals are asked to provide their SSN. The SSN becomes the service or employment number for the individual and is used to establish personnel, financial, medical, and other official records. After an individual has provided his or her SSN for the purpose of establishing a record, the Privacy Act Statement is not required if the individual is only requested to furnish or verify the SSN for identification purposes in connection with the normal use of his or her records. If the SSN is to be used for a purpose other than identification, the individual must be informed whether disclosure of the SSN is mandatory or voluntary; by what statutory authority the SSN is solicited; and what uses will be made of the SSN. This notification is required even if the SSN is not to be maintained in a Privacy Act system of records.

(4) When asking an individual for his or her SSN or other personal information that will be maintained in a system of records, the individual must be provided with a Privacy Act Statement.

(b) *Privacy Act Statement (PAS).* (1) A Privacy Act Statement is required whenever personal information is requested from an individual and will become part of a Privacy Act system of records. The information will be retrieved by the individual's name or other personal identifier (*See* 5 U.S.C. 552a(e)(3)).

(2) The PAS will ensure that individuals know why the information is being collected so they can make an

informed decision as to providing the personal information.

(3) In addition, the PAS will include language that is explicit, easily understood, and not so lengthy as to deter an individual from reading it.

(4) A sign can be displayed in areas where people routinely furnish this kind of information, and a copy of the PAS will be made available upon request by the individual.

(5) Do not ask the person to sign the PAS.

(6) A Privacy Act Statement must include the following four items—

(i) *Authority:* Cite the specific statute or Executive Order, including a brief title or subject that authorizes the DA to collect the personal information requested.

(ii) *Principal Purpose (s):* Cite the principal purposes for which the information will be used.

(iii) *Routine Uses:* A list of where and why the information will be disclosed OUTSIDE of DOD. Applicable routine uses are published in the applicable Privacy Act system of records notice(s). If none, the language to be used is: ''Routine Use(s): None. However the 'Blanket Routine Uses' set forth at the beginning of the Army's compilation of systems of records notices apply.''

(iv) *Disclosure:* Voluntary or Mandatory. Include in the Privacy Act Statement specifically whether furnishing the requested personal data is mandatory or voluntary. A requirement to furnish personal data is mandatory ONLY when a federal statute, Executive Order, regulation, or other law specifically imposes a duty on the individual to provide the information sought, and when the individual is subject to a penalty if he or she fails to provide the requested information. If providing the information is only a condition of or prerequisite to granting a benefit or privilege and the individual has the option of receiving the benefit or privilege, providing the information is always voluntary. However, the loss or denial of the privilege, benefit, or entitlement sought must be listed as a consequence of not furnishing the requested information.

(7) Some acceptable means of administering the PAS are as follows, in the order of preference—

(i) Below the title of the media used to collect the personal information. The PAS should be positioned so that the individual will be advised of the PAS before he or she provides the requested information;

(ii) Within the body with a notation of its location below the title;

(iii) On the reverse side with a notation of its location below the title;

(iv) Attached as a tear-off sheet; or

(v) Issued as a separate supplement.

(8) An example of a PAS is at appendix B of this part.

(9) Include a PAS on a Web site page if it collects information directly from an individual and is retrieved by his or her name or personal identifier (See Office of Management and Budget Privacy Act Guidelines, 40 FR 28949, 28961 (July 9, 1975)).

(10) Army policy prohibits the collection of personally identifying information on public Web sites without the express permission of the user. Requests for exceptions must be forwarded to the Army CIO/G–6. (See AR 25–1, para 6–4n.)

(c) *Collecting personal information from third parties.* (1) It may not be practical to collect personal information directly from the individual in all cases. Some examples of when collection from third parties may be necessary are when—

(i) Verifying information;

(ii) Opinions or evaluations are needed;

(iii) The subject cannot be contacted; or

(iv) At the request of the subject individual.

(2) When asking third parties to provide information about other individuals, they will be advised of—

(i) The purpose of the request; and

(ii) Their rights to confidentiality as defined by the Privacy Act of 1974 (Consult with your servicing Staff Judge Advocate for potential limitations to the confidentiality that may be offered pursuant to the Privacy Act).

(d) *Confidentiality promises.* Promises of confidentiality must be prominently annotated in the record to protect from disclosure any information provided in confidence pursuant to 5 U.S.C. 552a(k)(2), (k)(5), or (k)(7).

§ 505.5 Individual access to personal information.

(a) *Individual access.* (1) The access provisions of this part are intended for use by individuals whose records are maintained in a Privacy Act system of records. If a representative acts on their behalf, a written authorization must be provided, with the exception of members of Congress acting on behalf of a constituent.

(2) A Department of the Army ''Blanket Routine Use'' allows the release of Privacy Act protected information to members of Congress when they are acting on behalf of the constituent and the information is filed and retrieved by the constituent's name or personal identifier. The said ''Blanket Routine Use'' is listed below.

''Congressional Inquiries Disclosure Routine Use: Disclosure from a system of records maintained by a DOD Component may be made to a congressional office from the record of an individual in response to an inquiry from the congressional office made at the request of that individual.''

(3) Upon a written request, an individual will be granted access to information pertaining to him or her that is maintained in a Privacy Act system of records, unless—

(i) The information is subject to an exemption, the system manager has invoked the exemption, and the exemption is published in the **Federal Register**; or

(ii) The information was compiled in reasonable anticipation of a civil action or proceeding.

(4) Legal guardians or parents acting on behalf of a minor child have the minor child's rights of access under this part, unless the records were created or maintained pursuant to circumstances where the interests of the minor child were adverse to the interests of the legal guardian or parent.

(5) These provisions should allow for the maximum release of information consistent with Army and DOD's statutory responsibilities.

(b) *Individual requests for access.* (1) Individuals will address requests for access to records in a Privacy Act system of records to the system manager or the custodian of the record designated in DA systems of records notices (See DA PAM 25–51 or the Defense Privacy Office's Web site *http://www.defenselink.mil/privacy*).

(2) Individuals do not have to state a reason or justify the need to gain access to records under the Act.

(3) Release of personal information to individuals under this section is not considered a ''public release'' of information.

(c) *Verification of identity for first party requesters.* (1) Before granting access to personal data, an individual will provide reasonable verification of identity.

(2) When requesting records in writing, the preferred method of verifying identity is the submission of a notarized signature. An alternative method of verifying identity for individuals who do not have access to notary services is the submission of an un-sworn declaration in accordance with 28 U.S.C. 1746 in the following format:

(i) If executed within the United States, its territories, possessions, or commonwealths: ''I declare (or certify,

verify, or state) under penalty of perjury that the foregoing is true and correct. Executed on (date). (Signature)''.

(ii) If executed outside of the United States: ''I declare under perjury or penalty under the laws of the United States of America that the foregoing is true and correct. Executed on (date). (Signature).''

(3) When an individual seeks access in person, identification can be verified by documents normally carried by the individual (such as identification card, driver's license, or other license, permit or pass normally used for identification purposes). However, level of proof of identity is commensurate with the sensitivity of the records sought. For example, more proof is required to access medical records than is required to access parking records.

(4) Telephonic requests will not be honored.

(5) An individual cannot be denied access solely for refusal to provide his or her Social Security Number (SSN) unless the SSN was required for access by statute or regulation adopted prior to January 1, 1975.

(6) If an individual wishes to have his or her records released directly to a third party or to be accompanied by a third party when seeking access to his or her records, reasonable proof of authorization must be obtained. The individual may be required to furnish a signed access authorization with a notarized signature or other proof of authenticity (*i.e.* telephonic confirmation) before granting the third party access.

(d) *Individual access to medical records.* (1) An individual must be given access to his or her medical and psychological records unless a judgment is made that access to such records could have an adverse effect on the mental or physical health of the individual. This determination normally should be made in consultation with a medical doctor. Additional guidance is provided in DOD 5400.11–R, Department of Defense Privacy Program. In this instance, the individual will be asked to provide the name of a personal health care provider, and the records will be provided to that health care provider, along with an explanation of why access without medical supervision could be harmful to the individual.

(2) Information that may be harmful to the record subject should not be released to a designated individual unless the designee is qualified to make psychiatric or medical determinations.

(3) DA activities may offer the services of a military physician, other than the one who provided the treatment.

(4) Do not require the named health care provider to request the records for the individual.

(5) The agency's decision to furnish the records to a medical designee and not directly to the individual is not considered a denial for reporting purposes under the Act and cannot be appealed.

(6) However, no matter what the special procedures are, DA has a statutory obligation to ensure that access is provided the individual.

(7) Regardless of age, all DA military personnel and all married persons are considered adults. The parents of these individuals do not have access to their medical records without written consent of the individual.

(8) DOD 6025.18–R, DOD Health Information Privacy Regulation, issued pursuant to the Health Insurance Portability and Accountability Act (HIPAA) of 1996, has placed additional procedural requirements on the uses and disclosure of individually identifiable health information beyond those found in the Privacy Act of 1974 and this part. In order to be in compliance with HIPAA, the additional guidelines and procedures will be reviewed before release of an individual's identifiable health information.

(e) *Personal notes.* (1) The Privacy Act does not apply to personal notes of individuals used as memory aids. These documents are not Privacy Act records and are not subject to this part.

(2) The five conditions for documents to be considered personal notes are as follows—

(i) Maintained and discarded solely at the discretion of the author;

(ii) Created only for the author's personal convenience and the notes are restricted to that of memory aids;

(iii) Not the result of official direction or encouragement, whether oral or written;

(iv) Not shown to others for any reason; and

(v) Not filed in agency files.

(3) Any disclosure from personal notes, either intentional or through carelessness, removes the information from the category of memory aids and the personal notes then become subject to provisions of the Act.

(f) *Denial or limitation of individual's right to access.* (1) Even if the information is filed and retrieved by an individual's name or personal identifier, his or her right to access may be denied if—

(i) The records were compiled in reasonable anticipation of a civil action or proceeding including any action where DA expects judicial or administrative adjudicatory proceedings. The term ''civil action or proceeding'' includes quasi-judicial, pre-trial judicial, and administrative proceedings, as well as formal litigation;

(ii) The information is about a third party and does not pertain to the requester. A third party's SSN and home address will be withheld. However, information about the relationship between the individual and the third party would normally be disclosed as it pertains to the individual;

(iii) The records are in a system of records that has been properly exempted by the Secretary of the Army from the access provisions of this part and the information is exempt from release under a provision of the Freedom of Information Act (See appendix C of this part for a list of applicable Privacy Act exemptions, exceptions, and ''Blanket'' routine uses);

(iv) The records contain properly classified information that has been exempted from the access provision of this part;

(v) The records are not described well enough to enable them to be located with a reasonable amount of effort on the part of an employee familiar with the file. Requesters should reasonably describe the records they are requesting. They do not have to designate a Privacy Act system of records notice identification number, but they should at least identify a type of record or functional area. For requests that ask for ''all records about me,'' DA personnel should ask the requester for more information to narrow the scope of his or her request; and

(vi) Access is sought by an individual who fails or refuses to comply with Privacy Act established procedural requirements, included refusing to pay fees.

(2) Requesters will not use government equipment, supplies, stationery, postage, telephones, or official mail channels for making Privacy Act requests. System managers will process such requests but inform requesters that using government resources to make Privacy Act requests is not authorized.

(3) When a request for information contained in a Privacy Act system of records is denied in whole or in part, the Denial Authority or designee shall inform the requester in writing and explain why the request for access has been refused.

(4) A request for access, notification, or amendment of a record shall be acknowledged in writing within 10 working days of receipt by the proper system manager or record custodian.

(g) *Relationship between the Privacy Act and the Freedom of Information Act.* (1) Not all requesters are knowledgeable of the appropriate statutory authority to cite when requesting information. In some instances, they may cite neither the PA nor the Freedom of Information Act in their request. In some instances they may cite one Act but not the other. The Freedom of Information Act and the PA works together to ensure that requesters receive the greatest amount of information possible.

(2) Do not deny the individual access to his or her records simply because he or she failed to cite the appropriate statute or regulation.

(3) If the records are required to be released under the Freedom of Information Act, the PA will never block disclosure to requester. If the PA allows the DA activity to deny access to an individual, the Freedom of Information Act must still be applied, and the information released if required by the Freedom of Information Act.

(4) Unlike the Freedom of Information Act, the Privacy Act applies only to U.S. citizens and aliens lawfully admitted for permanent residence.

(5) Requesters who seek records about themselves contained in a Privacy Act system of records (1st party requesters) and who cite or imply only the Privacy Act, will have their request processed under the provisions of both the PA and the Freedom of Information Act. If the information requested is not contained in a Privacy Act system of records or is not about the requester, the individual's request will be processed under the provisions of the Freedom of Information Act only, and the Freedom of Information Act processing requirements/time lines will apply.

(6) *Third party information.* (i) Third party information contained in a Privacy Act system of records that does not pertain to the requester, such as SSN, home addresses, and other purely personal information that is not about the requester, will be processed under the provisions of Freedom of Information Act only. Third party information that is not about the requester is not subject to the Privacy Act's first party access provision.

(ii) Information about the relationship between the first party requester and a third party is normally disclosed as pertaining to the first party requester. Consult your servicing Staff Judge Advocate if there is a question about the release of third party information to a first party requester.

(7) If an individual requests information about them contained in a Privacy Act system of records, the individual may be denied the information only if the information is exempt under both the PA and the Freedom of Information Act. Both PA and Freedom of Information Act exemptions will be cited in the denial letter and appeals will be processed in accordance with both Acts.

(8) Each time a first party requester cites or implies the PA, perform this analysis:

(i) Is the request from a United States living citizen or an alien lawfully admitted for permanent residence?

(ii) Is the individual requesting an agency record?

(iii) Are the records within a PA system of records that are filed and retrieved by an individual's name or other personal identifier? (If the answer is ''yes'' to all of these questions, then the records should be processed under the ''Privacy Act'') and

(iv) Does the information requested pertain exclusively to the requester?

(A) If yes, no further consideration of Freedom of Information Act exemptions required. Release all information unless a PA exemption authorizes withholding.

(B) If no, process the information that is not about the requester under the Freedom of Information Act and withhold only if a proper Freedom of Information Act exemption applies.

(h) *Functional requests.* If an individual asks for his or her records and does not cite or reasonably imply either the Privacy Act or the Freedom of Information Act, and another prescribing directive or regulation authorizes the release, the records should be released under that other directive or regulation and not the PA or the FOIA. Examples of functional requests are military members asking to see their Official Military Personnel Records or civilian employees asking to see their Official Personnel Folder.

(i) *Procedures for denying or limiting an individual's right to access or amendment and the role of the Denial Authority.* (1) The only officials authorized to deny a request for records or a request to amend records in a PA system of records pertaining to the requesting individual, are the appropriate Denial Authorities, their designees, or the Secretary of the Army who will be acting through the General Counsel.

(2) Denial Authorities are authorized to deny requests, either in whole or in part, for notification, access and amendment of Privacy Act records contained in their respective areas of responsibility.

(i) The Denial Authority may delegate all or part of their authority to a division chief under his supervision within the Agency in the grade of 0–5/GS–14 or higher. All delegations must be in writing.

(ii) The Denial Authority will send the names, office names, and telephones numbers of their delegates to the DA Freedom of Information and Privacy Office.

(iii) If a Denial Authority delegate denies access or amendment, the delegate must clearly state that he or she is acting on behalf of the Denial Authority, who must be identified by name and position in the written response to the requester. Denial Authority designation will not delay processing privacy requests/actions.

(iv) The official Denial Authorities are for records under their authority (See appendix B of this part). The individuals designated as Denial Authorities under this part are the same individuals designated as Initial Denial Authorities under AR 25–55, the Department of the Army Freedom of Information Act Program. However, delegation of Denial Authority pursuant to this part does not automatically encompass delegation of Initial Denial Authority under AR 25–55. Initial Denial Authority must be expressly delegated pursuant to AR 25–55 for an individual to take action on behalf of an Initial Denial Authority under AR 25–55.

(3) The custodian of the record will acknowledge requests for access made under the provisions of the Privacy Act within 10 working days of receipt.

(4) Requests for information recommended for denial will be forwarded to the appropriate Denial Authority, along with a copy of the records and justification for withholding the record. At the same time, notify the requester of the referral to the Denial Authority for action. All documents or portions thereof determined to be releasable to the requester will be released to the requester before forwarding the case to the Denial Authority.

(5) Within 30 working days, the Denial Authority will provide the following notification to the requester in writing if the decision is to deny the requester access to the information.

(6) Included in the notification will be:

(i) Denying Official's name, position title, and business address;

(ii) Date of the denial;

(iii) The specific reason for the denial, citing the appropriate subsections of the Privacy Act, the Freedom of Information Act, AR 25–55, The Department of the Army Freedom of Information Act Program and this part; and

(iv) The individual's right to administratively appeal the denial within 60 calendar days of the mailing date of the notice, through the Denial Authority, to the Office of the General Counsel, Secretary of the Army, 104 Army Pentagon, Washington, DC 20310–0104.

(7) The appeal must be in writing and the requester should provide a copy of the denial letter and a statement of their reasons for seeking review.

(8) For denials made by the DA when the record is maintained in a Government-wide system of records, an individual's request for further review must be addressed to each of the appropriate government Privacy Act offices listed in the Privacy Act system of records notices. For a current listing of Government-wide Privacy Act system of records notices see the Defense Privacy Office's Web site *http://www.defenselink.mil/privacy* or DA PAM 25–51.

(j) *No records determinations.* (1) Since a no record response may be considered an ''adverse'' determination, the Denial Authority must make the final determination that no records exist. The originating agency shall notify the requester that an initial determination has been made that there are no responsive records, however the final determination will be made by the Denial Authority. A no records certificate must accompany a no records determination that is forwarded to the Denial Authority.

(2) The Denial Authority must provide the requester with appeal rights.

(k) *Referral of requests.* (1) A request received by a DA activity having no records responsive to a request shall be referred to another DOD Component or DA activity, if the other Component or activity confirms that they have the requested records, or verifies that they are the proper custodian for that type of record. The requester will be notified of the referral. In cases where the DA activity receiving the request has reason to believe that the existence or nonexistence of the record may in itself be classified, that activity will consult the Component or activity having cognizance over the records in question before referring the request. If the Component or activity that is consulted determines that the existence or nonexistence of the records is in itself classified, the requester shall be so notified by the DA activity originally receiving the request that it can neither confirm nor deny the existence of the record, and no referral shall take place.

(2) A DA activity shall refer a Privacy Act request for a classified record that it holds to another DOD Component, DA activity, or agency outside the Department of Defense, if the record originated in the other DOD Component, DA activity, or outside agency, or if the classification is derivative. The referring DA activity will provide the records and a release recommendation with the referral action.

(3) Any DA activity receiving a request that has been misaddressed will refer the request to the proper address and advise the requester.

(4) Within DA, referrals will be made directly to offices having custody of the requested records (unless the Denial Authority is the custodian of the requested records). If the office receiving the Privacy Act request does not know where the requested records are located, the office will contact the DA FOIA/P Office, to determine the appropriate office for referral.

(5) The requester will be informed of the referral whenever records or a portion of records are, after prior consultation, referred to another activity for a release determination and direct response. Additionally, the DA activity referral letter will accomplish the following—

(i) Fully describe the Privacy Act system of records from which the document was retrieved; and

(ii) Indicate whether the referring activity claims any exemptions in the Privacy Act system of records notice.

(6) Within the DA, an activity will refer a Privacy Act request for records that it holds but was originated by another activity, to the originating activity for direct response. An activity will not, in any case, release or deny such records without prior consultation with the originating activity. The requester will be notified of such referral.

(7) A DA activity may refer a Privacy Act request for records that originated in an agency outside of DOD, or that is based on information obtained from an agency outside the DOD, to that agency for direct response to the requester, only if that agency is subject to the Privacy Act. Otherwise, the DA activity must respond to the request.

(8) DA activities will not honor any Privacy Act requests for investigative, intelligence, or any other type of records that are on loan to the Department of Defense for a specific purpose, if the records are restricted from further release in writing. Such requests will be referred to the agency that provided the records.

(9) A DA activity will notify requesters seeking National Security Council (NSC) or White House documents that they should write directly to the NSC or White House for such documents. DA documents in which the NSC or White House have a concurrent reviewing interest will be forwarded to the Department of Defense, Office of Freedom of Information and Security Review, which will coordinate with the NSC or White House, and return the documents to the originating DA activity after NSC or White House review. NSC or White House documents discovered in DA activity files which are responsive to a Privacy Act request will be forwarded to DOD for coordination and return with a release determination.

(10) To the extent referrals are consistent with the policies expressed above; referrals between offices of the same DA activity are authorized.

(l) *Reproduction fees.* (1) Use fees only to recoup direct reproduction costs associated with granting access.

(2) DA activities may use discretion in their decision to charge for the first copy of records provided to an individual to whom the records pertain. Thereafter, fees will be computed pursuant to the fee schedule set forth in AR 25–55, including the fee waiver provisions.

(3) Checks or money orders for fees should be made payable to the Treasurer of the United States and will be deposited in the miscellaneous receipts of the treasury account maintained at the activity's finance office.

(4) Reproduction costs shall only include the direct costs of reproduction and shall not include costs of—

(i) Time or effort devoted to searching for or reviewing the records by personnel;

(ii) Fees not associated with the actual cost of reproduction;

(iii) Producing a copy when it must be provided to the individual without cost under another regulation, directive, or law;

(iv) Normal postage;

(v) Transportation of records or personnel; or

(vi) Producing a copy when the individual has requested only to review the records and has not requested a copy, and the only means of allowing review is to make a copy (e.g., the records are stored in a computer and a copy must be printed to provide individual access, or the activity does not wish to surrender temporarily the original records for the individual to review).

(m) *Privacy Act case files.* (1) Whenever an individual submits a Privacy Act request, a case file will be established. This Privacy Act case file is a specific type of file that is governed by a specific Privacy Act system of records notice. In no instance will the individual's Privacy Act request and

corresponding Army actions be included in the individual's military personnel file or other military filing systems, such as adverse action files or general legal files, and in no instance will the Privacy Act case file be used to make an adverse determination about the individual.

(2) The case file will be comprised of the request for access/amendment, grants, refusals, coordination action(s), and all related papers.

§ 505.6 Amendment of records.

(a) *Amended records.* (1) Individuals are encouraged to periodically review the information maintained about them in Privacy Act systems of records and to familiarize themselves with the amendment procedures established by this part.

(2) An individual may request to amend records that are retrieved by his or her name or personal identifier from a system of records unless the system has been exempted from the amendment provisions of the Act. The standard for amendment is that the records are inaccurate as a matter of fact rather than judgment, irrelevant, untimely, or incomplete. The burden of proof is on the requester.

(3) The system manager or custodian must review Privacy Act records for accuracy, relevance, timeliness, and completeness.

(4) Amendment procedures are not intended to permit individuals to challenge events in records that have actually occurred. Amendment procedures only allow individuals to amend those items that are factually inaccurate and not matters of official judgment (*e.g.*, performance ratings, promotion potential, and job performance appraisals). In addition, an individual is not permitted to amend records for events that have been the subject of judicial or quasi-judicial actions/proceedings.

(b) *Proper amendment requests.* (1) Amendment requests, except for routine administrative changes, will be in writing.

(2) When acting on behalf of a first party requester, an individual must provide written documentation of the first party requester's consent to allow the individual to view his or her records.

(3) Amendment is appropriate if it can be shown that—

(i) Circumstances leading up to the recorded event were found to be inaccurately reflected in the document;

(ii) The record is not identical to the individual's copy; or

(iii) The document was not constructed in accordance with the applicable recordkeeping requirements prescribed in AR 25–400–2, The Army Records Information Management System (ARIMS).

(4) Under the amendment provisions, an individual may not challenge the merits of an adverse determination.

(5) U.S. Army Criminal Investigation Command (USACIDC) reports of investigations (PA system of records notice A0195–2a USACIDC, Source Register; A0195–2b USACIDC, Criminal Investigation and Crime Laboratory Files) have been exempted from the amendment provisions of the Privacy Act. Requests to amend these reports will be considered under AR 195–2. Actions taken by the Commander of U.S. Army Criminal Investigation Command will constitute final action on behalf of the Secretary of the Army under that regulation.

(6) Records placed in the National Archives are exempt from the Privacy Act provision allowing individuals to request amendment of records. Most provisions of the Privacy Act apply only to those systems of records that are under the legal control of the originating agency; for example, an agency's current operating files or records stored at a Federal Records Center.

(7) Inspector General investigative files and action request/complaint files (records in system notice A0021–1 SAIG, Inspector General Records) have been exempted from the amendment provisions of the Privacy Act. Requests to amend these reports will be considered under AR 20–1 by the Inspector General. Action by the Inspector General will constitute final action on behalf of the Secretary of the Army under that regulation.

(8) Other records that are exempt from the amendment provisions of the Privacy Act are listed in the applicable PA system of records notices.

(c) *Amendment procedures.* (1) Requests to amend records should be addressed to the custodian or system manager of the records. The request must reasonably describe the records to be amended and the changes sought (e.g., deletion, addition, or amendment). The burden of proof is on the requester. The system manager or records custodian will provide the individual with a written acknowledgment of the request within 10 working days and will make a final response within 30 working days of the date the request was received. The acknowledgment must clearly identify the request and inform the individual that final action will be forthcoming within 30 working days.

(2) Records for which amendment is sought must be reviewed by the proper system manager or custodian for accuracy, relevance, timeliness, and completeness.

(3) If the amendment is appropriate, the system manager or custodian will physically amend the records accordingly. The requester will be notified of such action.

(4) If the amendment is not warranted, the request and all relevant documents, including reasons for not amending, will be forwarded to the proper Denial Authority within 10 working days to ensure that the 30 day time limit for the final response is met. In addition, the requester will be notified of the referral.

(5) Based on the documentation provided, the Denial Authority will either amend the records and notify the requester and the custodian of the records of all actions taken, or deny the request. If the records are amended, those who have received the records in the past will receive notice of the amendment.

(6) If the Denial Authority determines that the amendment is not warranted, he or she will provide the requester and the custodian of the records reason(s) for not amending. In addition, the Denial Authority will send the requester an explanation regarding his or her right to seek further review by the DA Privacy Act Review Board, through the Denial Authority, and the right to file a concise ''Statement of Disagreement'' to append to the individual's records.

(i) On receipt of a request for further review by the Privacy Act Review Board, the Denial Authority will append any additional records or background information that substantiates the refusal or renders the case complete;

(ii) Within 5 working days of receipt, forward the appeal to the DA Privacy Act Review Board; and

(iii) Append the servicing Judge Advocate's legal review, including a determination that the Privacy Act Review Board packet is complete.

(d) *DA Privacy Act Review Board.* (1) The DA Privacy Act Review Board acts on behalf of the Secretary of the Army in deciding appeals of the appropriate Denial Authority's refusal to amend records.

(2) The Board will process an appeal within 30 working days of its receipt. The General Counsel may authorize an additional 30 days when unusual circumstances and good cause so warrant.

(3) The Board membership consists of the following principal members, comprised of three voting and two non-voting members, or their delegates.

(4) Three voting members include—

(i) Administrative Assistant to the Secretary of the Army (AASA) who acts as the Chairman of the Board;

(ii) The Judge Advocate General; and

(iii) The Chief, DA Freedom of Information and Privacy Division, U.S. Army Records Management and Declassification Agency.

(5) In addition, two non-voting members include—

(i) The Chief Attorney, OAASA (or designee) who serves as the legal advisor and will be present at all Board sessions to provide legal advice as required; and

(ii) Recording Secretary provided by the Office of the Administrative Assistant to the Secretary of the Army.

(e) *DA Privacy Act Review Board meetings.* (1) The meeting of the Board requires the presence of all five members or their designated representatives. Other non-voting members with subject matter expertise may participate in a meeting of the Board, at the discretion of the Chairman.

(2) Majority vote of the voting members is required to make a final determination on a request before the Board.

(3) Board members, who have denial authority, may not vote on a matter upon which they took Denial Authority action. However, an individual who took Denial Authority action, or his or her representative, may serve as a non-voting member when the Board considers matters in the Denial Authority's area of functional specialization.

(4) The Board may seek additional information, including the requester's official personnel file, if relevant and necessary to decide the appeal.

(5) If the Board determines that an amendment is warranted (the record is inaccurate as a matter of fact rather than judgment, irrelevant, untimely, or incomplete) it will amend the record and notify the requester, the Denial Authority, the custodian of the record, and any prior recipients of the record, of the amendment.

(6) If the Board determines that amendment is unwarranted, they will—

(i) Obtain the General Counsel's concurrence in writing;

(ii) Respond to the requester with the reasons for denial; and

(iii) Inform the requester of the right to file a ''Statement of Disagreement'' with the Board's action and to seek judicial review of the Army's refusal to amend. A ''Statement of Disagreement'' must be received by the system manager within 120 days and it will be made an integral part of the pertinent record. Anyone who may have access to, use of, or need to disclose information from the record will be aware that the record was disputed. The disclosing authority may include a brief summary of the Board's reasons for not amending the disputed record.

(7) It is inappropriate for the Privacy Act Review Board to consider any record which is exempt from the amendment provision of the Privacy Act.

§ 505.7 Disclosure of personal information to other agencies and third parties.

(a) *Disclosing records to third parties.* (1) DA is prohibited from disclosing a record from a Privacy Act system of records to any person or agency without the prior written consent of the subject of the record, except when—

(i) Pursuant to the twelve Privacy Act exceptions. The twelve exceptions to the ''no disclosure without consent'' rule are those exceptions which permit the release of personal information without the individual's/subject's consent (See appendix C of this part).

(ii) The FOIA requires the release of the record. One of the twelve exceptions to Privacy Act is the FOIA Exception. If the FOIA requires the release of information, the information must be released. The Privacy Act can not prevent release to a third party if the FOIA requires release. However, information must not be discretionarily released under the FOIA if the information is subject to the Privacy Act's ''no disclosure without consent'' rule.

(iii) A routine use applies. Another major exception to the ''no disclosure without consent'' rule is the routine use exception. The Privacy Act allows federal agencies to publish routine use exceptions to the Privacy Act. Some routine uses are Army specific, DOD specific, and Governmentwide. Routine uses exceptions are listed in the Privacy Act system of records notice(s) applicable to the Privacy Act records in question. The Army and other agencies' system of records notices may be accessed at the Defense Privacy Office's Web site *http://www.defenselink.mil/privacy.*

(2) The approved twelve exceptions to the Privacy Act ''no disclosure without consent'' rule are listed at appendix C of this part.

(b) *Disclosing records to other DOD components and to federal agencies outside the DOD.* (1) The twelve Privacy Act exceptions referred to in appendix C of this part are available to other DOD components and to federal agencies outside the DOD as exceptions to the Privacy Act's ''no disclosure without consent'' rule, with the exception of the FOIA exception. The FOIA is not an appropriate mechanism for providing information to other DOD components and to federal agencies outside the DOD.

(2) A widely used exception to requests for information from local and state government agencies and federal agencies not within the DOD is the routine use exception to the Privacy Act.

(3) The most widely used exception to requests for information from other DOD components is the ''intra-agency need to know'' exception to the Privacy Act. Officers and employees of the DOD who have an official need for the records in the performance of their official duties are entitled to Privacy Act protected information. Rank, position, or title alone does not authorize access to personal information about others. An official need for the information must exist before disclosure.

(4) For the purposes of disclosure and disclosure accounting, the Department of Defense (DOD) is considered a single agency.

(c) *Disclosures under AR 25–55, the Freedom of Information Act (FOIA) Program.* (1) Despite Privacy Act protections, all records must be disclosed if the Freedom of Information Act (FOIA) requires their release. The FOIA requires release unless the information is exempted by one or more of the nine FOIA exemptions.

(2) Required release under the FOIA. The following are examples of personal information that is generally not exempt from the FOIA; therefore, it must be released to the public, unless covered by paragraphs (d)(2) and (d)(3) of this section. The following list is not all inclusive:

(i) Military Personnel—

(A) Rank, date of rank, active duty entry date, basic pay entry date, and gross pay (including base pay, special pay, and all allowances except Basic Allowance for Housing);

(B) Present and past duty assignments, future stateside assignments;

(C) Office/unit name, duties address and telephone number (DOD policy may require withholding of this information in certain circumstances);

(D) Source of commission, promotion sequence number, military awards and decorations, and professional military education;

(E) Duty status, at any given time;

(F) Separation or retirement dates;

(G) Military occupational specialty (MOS);

(H) Active duty official attendance at technical, scientific or professional meetings; and

(I) Biographies and photos of key personnel (DOD policy may require withholding of this information in certain circumstances).

(ii) Federal civilian employees—

(A) Present and past position titles, occupational series, and grade;

(B) Present and past annual salary rates (including performance awards or bonuses, incentive awards, merit pay amount, Meritorious or Distinguished Executive Ranks, and allowances and differentials);

(C) Present and past duty stations;

(D) Office or duty telephone number (DOD policy may require withholding of this information in certain circumstances); and

(E) Position descriptions, identification of job elements, and performance standards (but not actual performance appraisals), the release of which would not interfere with law enforcement programs or severely inhibit agency effectiveness. Performance elements and standards (or work expectations) may also be withheld when they are so intertwined with performance appraisals, the disclosure would reveal an individual's performance appraisal.

(d) *Personal information that requires protection.* (1) The following are examples of information that is generally NOT releasable without the written consent of the subject. This list is not all inclusive—

(i) Marital status;

(ii) Dependents' names, sex and SSN numbers;

(iii) Civilian educational degrees and major areas of study (unless the request for the information relates to the professional qualifications for Federal employment);

(iv) School and year of graduation;

(v) Home of record;

(vi) Home address and phone;

(vii) Age and date of birth;

(viii) Overseas assignments (present or future);

(ix) Overseas office or unit mailing address and duty phone of routinely deployable or sensitive units;

(x) Race/ethnic origin;

(xi) Educational level (unless the request for the information relates to professional qualifications for federal employment);

(xii) Social Security Number (SSN); and

(xiii) The information that would otherwise be protected from mandatory disclosure under a FOIA exemption.

(2) The Office of the Secretary of Defense issued a policy memorandum in 2001 that provided greater protection of DOD personnel in the aftermath of 9/11 by requiring information that personally identifies DOD personnel be more carefully scrutinized and limited. In general, the Department of Defense has specifically advised that DOD components are not to release lists of names, duty addresses, present or past position titles, grades, salaries, and performance standards of DOD military members and civilian employees. At the office director level or above, the release of information will be limited to the name, official title, organization, and telephone number, provided a determination is made that disclosure does not raise security or privacy concerns. No other information, including room numbers, will normally be released about these officials. Consistent with current policy, information on officials below the office director level may continue to be released if their positions or duties require frequent interaction with the public.

(3) Disclosure of records pertaining to personnel of overseas, sensitive, or routinely deployed units shall be prohibited to the extent authorized by 10 U.S.C. 130b.

(e) *Release of home addresses and home telephone numbers.* (1) The release of home addresses and home telephone numbers normally is prohibited. This release is normally considered a clearly ''unwarranted invasion'' of personal privacy and is exempt from mandatory release under the FOIA. However, home addresses and home telephone numbers may still be released if—

(i) The individual has indicated previously in writing that he or she has no objection to the release;

(ii) The source of the information to be released is a public document such as commercial telephone directory or other public listing;

(iii) The release is required by Federal statute (for example, pursuant to federally funded state programs to locate parents who have defaulted on child support payments) (See 42 U.S.C. 653); or

(iv) The releasing of information is pursuant to the routine use exception or the ''intra-agency need to know'' exception to the Privacy Act.

(2) A request for a home address or telephone number may be referred to the last known address of the individual for a direct reply by the individual to the requester. In such cases, the requester shall be notified of the referral.

(3) Do not sell or rent lists of individual names and addresses unless such action is specifically authorized by the appropriate authority.

(f) *Emergency Recall Rosters.* (1) The release of emergency recall rosters normally is prohibited. Their release is normally considered a clearly ''unwarranted invasion'' of personal privacy and is exempt from mandatory release under the FOIA. Emergency recall rosters should only be shared with those who have an ''official need to know'' the information, and they should be marked ''For Official Use Only'' (See AR 25–55).

(2) Do not include a person's SSN on an emergency recall roster or their spouse's name.

(3) Commanders and supervisors should give consideration to those individuals with unlisted phone numbers. Commanders and supervisors should consider limiting access to an unlisted number within the unit.

(g) *Social Rosters.* (1) Before including personal information such as a spouse's name, home addresses, home phone numbers, and similar information on social rosters or social directories, which will be shared with individuals, always ask for the individual's written consent. Without their written consent, do not include this information.

(2) Collection of this information will require a Privacy Act Statement which clearly tells the individual what information is being solicited, the purpose, to whom the disclosure of the information is made, and whether collection of the information is voluntary or mandatory.

(h) *Disclosure of personal information on group orders.* (1) Personal information will not be posted on group orders so that everyone on the orders can view it. Such a disclosure of personal information violates the Privacy Act and this part.

(2) The following are some examples of personal information that should not be contained in group orders. The following list is not all-inclusive—

(i) Complete SSN;

(ii) Home addresses and phone numbers; or

(iii) Date of birth.

(i) *Disclosures for established routine uses.* (1) Records may be disclosed outside the DOD without the consent of the individual to whom they pertain for an established routine use.

(2) A routine use shall—

(i) Be compatible with and related to the purpose for which the record was compiled;

(ii) Identify the persons or organizations to which the records may be released; and

(iii) Have been published previously in the **Federal Register**.

(3) Establish a routine use for each user of the information outside the Department of Defense who needs official access to the records.

(4) Routine uses may be established, discontinued, or amended without the consent of the individuals involved. However, new or changed routine uses

must be published in the **Federal Register** at least 30 days before actually disclosing any records.

(5) In addition to the routine uses listed in the applicable systems of records notices, ''Blanket Routine Uses'' for all DOD maintained systems of records have been established. These ''Blanket Routine Uses'' are applicable to every record system maintained within the DOD unless specifically stated otherwise within a particular record system. The ''Blanket Routine Uses'' are listed at appendix C of this part.

(j) *Disclosure accounting.* (1) System managers must keep an accurate record of all disclosures made from DA Privacy Act system of records, including those made with the consent of the individual, except when records are—

(i) Disclosed to DOD officials who have a ''need to know'' the information to perform official government duties; or

(ii) Required to be disclosed under the Freedom of Information Act.

(2) The purpose for the accounting of disclosure is to—

(i) Enable an individual to ascertain those persons or agencies that have received information about them;

(ii) Enable the DA to notify past recipients of subsequent amendments or ''Statements of Dispute'' concerning the record; and

(iii) Provide a record of DA compliance with the Privacy Act of 1974, if necessary.

(3) Since the characteristics of records maintained within DA vary widely, no uniform method for keeping the disclosure accounting is prescribed.

(4) Essential elements to include in each disclosure accounting report are—

(i) The name, position title, and address of the person making the disclosure;

(ii) Description of the record disclosed;

(iii) The date, method, and purpose of the disclosure; and

(iv) The name, position title, and address of the person or agency to which the disclosure was made.

(5) The record subject has the right of access to the disclosure accounting except when—

(i) The disclosure was made for law enforcement purposes under 5 U.S.C. 552a(b)(7); or

(ii) The disclosure was made from a system of records for which an exemption from 5 U.S.C. 552a(c)(3) has been claimed.

(6) There are no approved filing procedures for the disclosure of accounting records; however, system managers must be able to retrieve upon request. With this said, keep disclosure accountings for 5 years after the disclosure, or for the life of the record, whichever is longer.

(7) When an individual requests such an accounting, the system manager or designee will respond within 20 working days.

§ 505.8 Training requirements.

(a) *Training.* (1) The Privacy Act requires all heads of Army Staff agencies, field operating agencies, direct reporting units, Major Commands, subordinate commands, and installations to establish rules of conduct for all personnel involved in the design, development, operation, and maintenance of any Privacy Act system of records and to train the appropriate personnel with respect to the privacy rules including the penalties for non-compliance (See 5 U.S.C. 552a(e)(9)).

(2) To meet the training requirements, three general levels of training must be established. They are—

(i) *Orientation.* Training that provides basic understanding of this part as it applies to the individual's job performance. This training will be provided to personnel, as appropriate, and should be a prerequisite to all other levels of training;

(ii) *Specialized training.* Training that provides information as to the application of specific provisions of this part to specialized areas of job performance. Personnel of particular concern include, but are not limited to, personnel specialists, finance officers, DOD personnel who may be expected to deal with the news media or the public, special investigators, paperwork managers, individuals working with medical and security records, records managers, computer systems development personnel, computer systems operations personnel, statisticians dealing with personal data and program evaluations, contractors and anyone responsible for implementing or carrying out functions under this part. Specialized training should be provided on a periodic basis; and

(iii) *Managerial training.* Training designed to identify for responsible managers (such as senior system managers, Denial Authorities, and functional managers described in this section) issues that they should consider when making management decisions affected by the Privacy Act Program.

(b) *Training tools.* Helpful resources include—

(1) Privacy Act training slides for Major Commands and Privacy Act Officers: Contact the DA FOIA/P Office, or slides can be accessed at the Web site *https://www.rmda.belvoir.army.mil/rmdaxml/rmda/FPHomePage.asp.*

(2) The ''DOJ Freedom of Information Act Guide and Privacy Act Overview'': The U.S. Department of Justice, Executive Office for United States Attorneys, Office of Legal Education, 600 E. Street, NW., Room 7600, Washington, DC 20530, or training programs can be accessed at the Web site *www.usdoj.gov/usao/eousa/ole.html.*

§ 505.9 Reporting requirements.

The Department of the Army will submit reports, consistent with the requirements of DOD 5400.11–R, OMB Circular A–130, and as otherwise directed by the Defense Privacy Office. Contact the DA FOIA/P Office for further guidance regarding reporting requirements.

§ 505.10 Use and establishment of exemptions.

(a) *Three types of exemptions.* (1) There are three types of exemptions applicable to an individual's right to access permitted by the Privacy Act. They are the Special, General, and Specific exemptions.

(2) Special exemption (d)(5)—Relieves systems of records from the access provision of the Privacy Act only. This exemption applies to information compiled in reasonable anticipation of a civil action or proceeding.

(3) General exemption (j)(2)—Relieves systems of records from most requirements of the Act. Only Army activities actually engaged in the enforcement of criminal laws as their primary function may claim this exemption.

(4) Specific exemptions (k)(1)–(k)(7)–Relieves systems of records from only a few provisions of the Act.

(5) To find out if an exemption is available for a particular record, refer to the applicable system of records notices. System of records notices will state which exemptions apply to a particular type of record. System of records notices that are applicable to the Army are contained in DA Pam 25–51 (available at the Army Publishing Directorate Web site *http://www.usapa.army.mil/*), the Defense Privacy Office's Web site *http://www.defenselink.mil/privacy/*), or in this section). Some of the system of records notices apply only to the Army and the DOD and some notices are applicable government-wide.

(6) Descriptions of current exemptions are listed in detail at appendix C of this part.

(b) *Exemption procedures.* (1) For the General and Specific exemptions to be applicable to the Army, the Secretary of

the Army must promulgate exemption rules to implement them. This requirement is not applicable to the one Special exemption which is self-executing. Once an exemption is made applicable to the Army through the exemption rules, it will be listed in the applicable system of records notices to give notice of which specific types of records the exemption applies to. When a system manager seeks to have an exemption applied to a certain Privacy Act system of records that is not currently provided for by an existing system of records notice, the following information will be furnished to the DA FOIA/P Office—

(i) Applicable system of records notice;

(ii) Exemption sought; and

(iii) Justification.

(2) After appropriate staffing and approval by the Secretary of the Army and the Defense Privacy Office, it will be published in the **Federal Register** as a proposed rule, followed by a final rule 60 days later. No exemption may be invoked until these steps have been completed.

§ 505.11 Federal Register publishing requirements.

(a) *The Federal Register*. There are three types of documents relating to the Privacy Act Program that must be published in the **Federal Register**. They are the DA Privacy Program policy and procedures (AR 340–21), the DA exemption rules, and Privacy Act system of records notices.

(b) *Rulemaking procedures.* (1) DA Privacy Program procedures and exemption rules are subject to the formal rulemaking process.

(2) Privacy Act system of records notices are not subject to formal rulemaking and are published in the **Federal Register** as Notices, not Rules.

(3) The Privacy Program procedures and exemption rules are incorporated into the Code of Federal Regulations (CFR). Privacy Act system of records notices are not published in the CFR.

§ 505.12 Privacy Act enforcement actions.

(a) *Judicial Sanctions.* The Act has both civil remedies and criminal penalties for violations of its provisions.

(1) *Civil remedies.* The DA is subject to civil remedies for violations of the Privacy Act. In addition to specific remedial actions, 5 U.S.C. 552a(g) may provide for the payment of damages, court costs, and attorney's fees.

(2) *Criminal penalties.* A DA official or employee may be found guilty of a misdemeanor and fined not more than $5,000 for willfully—

(i) Disclosing individually identifiable personal information to one not entitled to the information;

(ii) Requesting or obtaining information from another's record under false pretenses; or

(iii) Maintaining a system of records without first meeting the public notice requirements of the Act.

(b) *Litigation Status Sheet.* (1) When a complaint citing the Privacy Act is filed in a U.S. District Court against the Department of the Army, an Army Component, a DA Official, or any Army employee, the responsible system manager will promptly notify the Army Litigation Division, 901 North Stuart Street, Arlington, VA 22203–1837.

(2) The Litigation Status Sheet at appendix E of this part provides a standard format for this notification. At a minimum, the initial notification will have items (a) through (f) provided.

(3) A revised Litigation Status Sheet must be provided at each stage of the litigation.

(4) When a court renders a formal opinion or judgment, copies must be provided to the Defense Privacy Office by the Army Litigation Division.

(c) *Administrative Remedies—Privacy Act complaints.* (1) The installation level Privacy Act Officer is responsible for processing Privacy Act complaints or allegations of Privacy Act violations. Guidance should be sought from the local Staff Judge Advocate and coordination made with the system manager to assist in the resolution of Privacy Act complaints. The local Privacy Act officer is responsible for—

(i) Reviewing allegations of Privacy Act violations and the evidence provided by the complainants;

(ii) Making an initial assessment as to the validity of the complaint, and taking appropriate corrective action;

(iii) Coordinating with the local Staff Judge Advocate to determine whether a more formal investigation such as a commander's inquiry or an AR 15–6 investigation is appropriate; and

(iv) Ensuring the decision at the local level from either the Privacy Act Officer or other individual who directed a more formal investigation is provided to the complainant in writing.

(2) The decision at the local level may be appealed to the next higher command level Privacy Act Officer.

(3) A legal review from the next higher command level Privacy Act Officer's servicing Staff Judge Advocate is required prior to action on the appeal.

§ 505.13 Computer Matching Agreement Program.

(a) *General provisions.* (1) Pursuant to the Privacy Act and this part, DA records may be subject to computer matching, *i.e.*, the computer comparison of automated systems of records.

(2) There are two specific kinds of Matching Programs covered by the Privacy Act—

(i) Matches using records from Federal personnel or payroll systems of records; and

(ii) Matches involving Federal benefit programs to accomplish one or more of the following purposes—

(A) To determine eligibility for a Federal benefit;

(B) To comply with benefit program requirements; and

(C) To effect recovery of improper payments or delinquent debts from current or former beneficiaries.

(3) The comparison of records must be computerized. Manual comparisons are not covered.

(4) Any activity that expects to participate in a Computer Matching Program must contact the DA FOIA/P Office immediately.

(5) In all cases, Computer Matching Agreements are processed by the Defense Privacy Office and approved by the Defense Data Integrity Board. Agreements will be conducted in accordance with the requirements of 5 U.S.C. 552a, and OMB Circular A–130.

(b) *Other matching.* Several types of computer matching are exempt from the restrictions of the Act such as matches used for statistics, pilot programs, law enforcement, tax administration, routine administration, background checks, and foreign counterintelligence. The DA FOIA/P Office should be consulted if there is a question as to whether the Act governs a specific type of computer matching.

§ 505.14 Recordkeeping requirements under the Privacy Act.

(a) *AR 25–400–2, The Army Records Information Management System (ARIMS).* To maintain privacy records are required by the Army Records Information Management System (ARIMS) to provide adequate and proper documentation of the conduct of Army business so that the rights and interests of individuals and the Federal Government are protected.

(b) A full description of the records prescribed by this part and their disposition/retention requirements are found on the ARIMS Web site at *https://www.arims.army.mil.*

Appendix A to Part 505—References

(a) The Privacy Act of 1974 (5 U.S.C. 552a, as amended).

(b) OMB Circular No. A–130, Management of Federal Information Resources.

(c) AR 25–55, The Department of the Army Freedom of Information Program.

(d) DA PAM 25–51, The Army Privacy Program—System of Records Notices and Exemption Rules.

(e) DOD Directive 5400.11, Department of Defense Privacy Program.

(f) DOD 5400.11–R, Department of Defense Privacy Program.

(g) AR 25–2, Information Assurance

(h) AR 25–400–2, The Army Records Information Management System (ARIMS).

(i) AR 27–10, Military Justice.

(j) AR 40–66, Medical Record Administration and Health Care Documentation.

(k) AR 60–20 and AFR 147–14, Army and Air Force Exchange Service Operating Policies.

(l) AR 190–45, Law Enforcement Reporting.

(m) AR 195–2, Criminal Investigation Activities.

(n) AR 380–5, Department of Army Information Security Program.

(o) DOD Directive 5400–7, DOD Freedom of Information Act (FOIA) Program.

(q) DOD 5400.7–R, DOD Freedom of Information Program.

(r) DOD 6025.18–R, DOD Health Information Privacy Regulation (HIPAA).

(s) U.S. Department of Justice, Freedom of Information Act Guide and Privacy Act Overview.

(t) Office of Secretary of Defense memorandum, dated July 15, 2005, subject: Notifying Individuals when Personal Information is Lost, Stolen, or Compromised located at *http://www.army.mil/ciog6/referencs/policy/dos/OSDprivateinfo.pdf.*

Appendix B to Part 505—Denial Authorities for Records Under Their Authority (Formerly Access and Amendment Refusal Authorities)

(a) The Administrative Assistant to the Secretary of the Army is authorized to act for the Secretary of the Army on requests for all records maintained by the Office of the Secretary of the Army and its serviced activities, as well as requests requiring the personal attention of the Secretary of the Army. This also includes civilian Equal Employment Opportunity (EEO) actions. (*See* DCS, G–1 for Military Equal Opportunity (EO) actions.) The Administrative Assistant to the Secretary of the Army has delegated this authority to the Chief Attorney, OAASA (See DCS, G1 for Military Equal Opportunity (EO) actions).

(b) The Assistant Secretary of the Army (Financial Management and Comptroller) is authorized to act on requests for finance and accounting records. Requests for CONUS finance and accounting records should be referred to the Defense Finance and Accounting Service (DFAS). The Chief Attorney, OAASA, acts on requests for non-finance and accounting records of the Assistant Secretary of the Army (Financial Management and Comptroller).

(c) The Assistant Secretary of the Army (Acquisition, Logistics, & Technology) is authorized to act on requests for procurement records other than those under the purview of the Chief of Engineers and the Commander, U.S. Army Materiel Command. The Chief Attorney, OAASA, acts on requests for non-procurement records of the Assistant Secretary of the Army (Acquisition, Logistics and Technology).

(d) The Deputy Assistant Secretary of the Army (Civilian Personnel Policy)/Director of Civilian Personnel, Office of the Assistant Secretary of the Army (Manpower and Reserve Affairs) is authorized to act on requests for civilian personnel records, personnel administration and other civilian personnel matters, except for EEO (civilian) matters which will be acted on by the Administrative Assistant to the Secretary of the Army. The Deputy Assistant Secretary of the Army (Civilian Personnel Policy)/Director of Civilian Personnel has delegated this authority to the Chief, Policy and Program Development Division (**Note:** Requests from former civilian employees to amend a record in an Office of Personnel Management system of records, such as the Official Personnel Folder, should be sent to the Office of Personnel Management, Assistant Director for Workforce Information, Compliance, and Investigations Group: 1900 E. Street, NW., Washington, DC 20415–0001).

(e) The Chief Information Officer G–6 is authorized to act on requests for records pertaining to Army Information Technology, command, control communications and computer systems and the Information Resources Management Program (automation, telecommunications, visual information, records management, publications and printing).

(f) The Inspector General is authorized to act on requests for all Inspector General Records.

(g) The Auditor General is authorized to act on requests for records relating to audits done by the U.S. Army Audit Agency under AR 10–2. This includes requests for related records developed by the Audit Agency.

(h) The Director of the Army Staff is authorized to act on requests for all records of the Chief of Staff and its Field Operating Agencies. The Director of the Army Staff has delegated this authority to the Chief Attorney and Legal Services Directorate, U.S. Army Resources & Programs Agency (See The Judge Advocate General for the General Officer Management Office actions). The Chief Attorney and Legal Services Director, U.S. Army Resources & Programs Agency acts on requests for records of the Chief of Staff and its Field Operating Agencies (See The Judge Advocate General for the General Officer Management Office actions).

(i) The Deputy Chief of Staff, G–3/5/7 is authorized to act on requests for records relating to International Affairs policy, planning, integration and assessments, strategy formulation, force development, individual and unit training policy, strategic and tactical command and control systems, nuclear and chemical matters, use of DA forces.

(j) The Deputy Chief of Staff, G–8 is authorized to act on requests for records relating to programming, material integration and externally directed reviews.

(k) The Deputy Chief of Staff, G–1 is authorized to act on the following records: Personnel board records, Equal Opportunity (military) and sexual harassment, health promotions, physical fitness and well-being, command and leadership policy records, HIV and suicide policy, substance abuse programs except for individual treatment records which are the responsibility of the Surgeon General, retiree benefits, services, and programs (excluding individual personnel records of retired military personnel, which are the responsibility of the U.S. Army Human Resources Command-St. Louis), DA dealings with Veterans Affairs, U.S. Soldier's and Airmen's Home; all retention, promotion, and separation records; all military education records including records related to the removal or suspension from a military school or class; Junior Reserve Officer Training Corps (JROTC) and Senior Reserve Officer Training Corps (SROTC) records; SROTC instructor records; U.S. Military Academy Cadet Records; recruiting and MOS policy issues, personnel travel and transportation entitlements, military strength and statistics, The Army Librarian, demographics, and Manprint.

(l) The Deputy Chief of Staff, G–4 is authorized to act on requests for records relating to DA logistical requirements and determinations, policy concerning materiel maintenance and use, equipment standards, and logistical readiness.

(m) The Chief of Engineers is authorized to act on requests for records involving civil works, military construction, engineer procurement, and ecology; and the records of the U.S. Army Engineer divisions, districts, laboratories, and field operating agencies.

(n) The Surgeon General/Commander, U.S. Army Medical Command, is authorized to act on requests for medical research and development records, and the medical records of active duty military personnel, dependents, and persons given physical examination or treatment at DA medical facilities, to include alcohol and drug treatment/test records.

(o) The Chief of Chaplains is authorized to act on requests for records involving ecclesiastical relationships, rites performed by DA chaplains, and nonprivileged communications relating to clergy and active duty chaplains' military personnel files.

(p) The Judge Advocate General is authorized to act on requests for records relating to claims, courts-martial, legal services, administrative

(q) The Chief, National Guard Bureau, is authorized to act on requests for all personnel and medical records of retired, separated, discharged, deceased, and active Army National Guard military personnel, including technician personnel, unless such records clearly fall within another Denial Authority's responsibility. This authority includes, but is not limited to, National Guard organization and training files; plans, operations, and readiness files, policy files, historical files, files relating to National Guard military support, drug interdiction, and civil disturbances; construction, civil works, and ecology records dealing with armories, facilities within the States, ranges, etc.; Equal Opportunity investigative records; aviation program records and financial records dealing with personnel, operation and maintenance, and equipment budgets.

(r) The Chief, Army Reserve and Commander, U.S. Army Reserve Command are authorized to act on requests for all

personnel and medical records of retired, separated, discharged, deceased, and reserve component military personnel, and all U.S. Army Reserve (USAR) records, unless such records clearly fall within another Denial Authority's responsibility. Records under the responsibility of the Chief, Army Reserve and the Commander, U.S. Army Reserve Command include records relating to USAR plans, policies, and operations; changes in the organizational status of USAR units; mobilization and demobilization policies, active duty tours, and the Individual Mobilization Augmentation program; and all other Office of the Chief, Army Reserve (OCAR) records and Headquarters, U.S. Army Reserve Command records.

(s) The Commander, United States Army Materiel Command (AMC) is authorized to act on requests for the records of AMC headquarters and to subordinate commands, units, and activities that relate to procurement, logistics, research and development, and supply and maintenance operations.

(t) The Provost Marshal General is authorized to act on all requests for provost marshal activities and law enforcement functions for the Army, all matters relating to police intelligence, physical security, criminal investigations, corrections and internment (to include confinement and correctional programs for U.S. prisoners, criminal investigations, provost marshal activities, and military police support. The Provost Marshal General is responsible for the Office of Security, Force Protection, and Law Enforcement Division and is the functional proponent for AR 190-series (Military Police) and 195-series (Criminal Investigation), AR 630–10 Absent Without Leave, Desertion, and Administration of Personnel Involved in Civilian Court Proceedings, and AR 633–30, Military Sentences to Confinement.

(u) The Commander, U.S. Army Criminal Investigation Command, is authorized to act on requests for criminal investigative records of USACIDC headquarters, and its subordinate activities, and military police reports. This includes criminal investigation records, investigation-in-progress records, and all military police records and reports that result in criminal investigation reports. This authority has been delegated to the Director, U.S. Army Crime Records Center.

(v) The Commander, U.S. Army Human Resources Command, is authorized to act on requests for military personnel files relating to active duty personnel including, but not limited to military personnel matters, military education records including records related to the removal or suspension from a military school or class; personnel locator, physical disability determinations, and other military personnel administration records; records relating to military casualty and memorialization activities; heraldic activities, voting, records relating to identification cards, naturalization and citizenship, commercial solicitation, Military Postal Service Agency and Army postal and unofficial mail service. The Commander, U.S. Army Human Resources Command, is also authorized to act on requests concerning all personnel and medical records of retired, separated, discharged, deceased, and reserve component military personnel, unless such records clearly fall within another Denial Authority's authority.

(w) The Commander, U.S. Army Resources Command-St. Louis has been delegated authority to act on behalf of the U.S. Army Human Resources Commander for requests concerning all personnel and medical records of retired, separated, discharged, deceased, and reserve component military personnel, unless such records clearly fall within another Denial Authority's authority. The authority does not include records relating to USAR plans, policies, and operations; changes in the organizational status of USAR units, mobilization and demobilization policies; active duty tours, and the individual mobilization augmentation program.

(x) The Assistant Chief of Staff for Installation Management is authorized to act on requests for records relating to planning, programming, execution and operation of Army installations. This includes base realignment and closure activities, environmental activities other than litigation, facilities and housing activities, and installation management support activities.

(y) The Commander, U.S. Army Intelligence and Security Command, is authorized to act on requests for intelligence and security records, foreign scientific and technological records, intelligence training, intelligence threat assessments, and foreign liaison information, mapping and geodesy information, ground surveillance records, intelligence threat assessment, and missile intelligence data relating to tactical land warfare systems.

(z) The Commander, U.S. Army Combat Readiness Center (formerly U.S. Army Safety Center), is authorized to act on requests for Army safety records.

(aa) The Commander, U.S. Army Test and Evaluation Command (ATEC), is authorized to act on requests for the records of ATEC headquarters, its subordinate commands, units, and activities that relate to test and evaluation operations.

(bb) The General Counsel, Army and Air Force Exchange Service, is authorized to act on requests for Army and Air Force Exchange Service records, under AR 60–20/AFR 147–14.

(cc) The Commandant, United States Disciplinary Barracks (USDB) is authorized to act on records pertaining to USDB functional area responsibilities relating to the administration and confinement of individual military prisoners at the USDB. This includes, but is not limited to, all records pertaining to the treatment of military prisoners; investigation of prisoner misconduct; management, operation, and administration of the USDB confinement facility; and related programs which fall directly within the scope of the Commandant's functional area of command and control.

(dd) The Commander, U.S. Army Community and Family Support Center (USACFSC) is authorized to act on requests for records pertaining to morale, welfare, recreation, and entertainment programs; community and family action programs; child development centers; non-appropriated funds issues, and private organizations on Army installations.

(ee) The Commander, Military Surface Deployment and Distribution Command (formerly Military Traffic Management Command) is authorized to act on requests for records pertaining to military and commercial transportation and traffic management records.

(ff) The Director, Installation Management Agency (IMA) is authorized to act on requests for all IMA records.

(gg) Special Denial Authority's authority for time-event related records may be designated on a case-by-case basis. These will be published in the **Federal Register**. You may contact the Department of the Army, Freedom of Information and Privacy Office to obtain current information on special delegations.

Appendix C to Part 505—Privacy Act Statement Format

(a) *Authority:* The specific federal statute or Executive Order that authorizes collection of the requested information.

(b) *Principal Purpose(s):* The principal purpose or purposes for which the information is to be used.

(c) *Routine Uses(s):* Disclosure of the information outside DOD.

(d) *Disclosure:* Whether providing the information is voluntary or mandatory and the effects on the individual if he or she chooses not to provide the requested information.

(1) Example of a Privacy Act Statement

(i) *Authority:* Emergency Supplement Act of 2000; Public Law 106–246; 5 U.S.C. 3013, Secretary of the Army; 10 U.S.C. 5013, Secretary of the Navy; 10 U.S.C. 8013, Secretary of the Air Force; Department of Defense Directive 8500.aa, Information Assurance (IA); and E.O. 9397 (SSN).

(ii) *Principal Purpose(s):* To control access to DOD information, information based systems and facilities by authenticating the identity of a person using a measurable physical characteristic(s). This computer system uses software programs to create biometrics templates and summary statistics, which are used for purposes such as assessing system performance or identifying problem areas.

(iii) *Routine Use(s):* None. The DoD ''Blanket Routine Uses'' set forth at the beginning of the Army's Compilations of System of Records Notices applies to this system.

(iv) *Disclosure:* Voluntary; however, failure to provide the requested information may result in denial of access to DOD information based systems and/or DOD facilities.

(2) [Reserved].

Appendix D to Part 505—Exemptions; Exceptions; and DoD Blanket Routine Uses

(a) *Special Exemption.* 5 U.S.C. 552a(d)(5)—Denies individual access to any information compiled in reasonable anticipation of civil action or proceeding.

(b) *General and Specific Exemptions.* The Secretary of the Army may exempt Army systems of records from certain requirements

of the Privacy Act. The two kinds of exemptions that require Secretary of the Army enactment are General and Specific exemptions. The Army system of records notices for a particular type of record will state whether the Secretary of the Army has authorized a particular General and Specific exemption to a certain type of record. The Army system of records notices are published in DA Pam 25–51 and on the Defense Privacy Office's Web site *http://www.defenselink.mil/privacy/*.

(c) *Twelve Exceptions to the ''No Disclosure without Consent'' rule of the Privacy Act.*

(1) 5 U.S.C. 552a(b)(1)—To DOD officers and employees who have a need for the record in the performance of their official duties. This is the ''official need to know concept.

(2) 5 U.S.C. 552a(b)(2)—FOIA requires release of the information.

(3) 5 U.S.C. 552a(b)(3)—The Routine Use Exception. The Routine Use must be published in the **Federal Register** and the purpose of the disclosure must be compatible with the purpose for the published Routine Use. The applicable Routine Uses for a particular record will be listed in the applicable Army Systems Notice.

(4) 5 U.S.C. 552a(b)(4)—To the Bureau of the Census to plan or carry out a census or survey, or related activity pursuant to Title 13 of the U.S. Code.

(5) 5 U.S.C. 552a(b)(5)—To a recipient who has provided DA or DOD with advance adequate written assurance that the record will be used solely as a statistical research or reporting record, and the record is to be transferred in a form that is not individually identifiable.

(6) 5 U.S.C. 552a(b)(6)—To the National Archives and Records Administration as a record that has sufficient historical or other value to warrant its continued preservation by the U.S. Government, or for evaluation by the Archivist of the United States or the designee of the Archivist to determine whether the record has such value.

Note: Records transferred to the Federal Records Centers for storage remain under the control of the DA and no accounting for disclosure is required under the Privacy Act.

(7) 5 U.S.C. 552a(b)(7)—To another agency or instrumentality of any governmental jurisdiction within or under the control of the United States for a civil or criminal law enforcement activity, if the activity is authorized by law, and if the head of the agency or instrumentality has made a written request to the Army or the DOD specifying the particular portion desired and the law enforcement activity for which the record is sought.

(8) 5 U.S.C. 552a(b)(8)—To a person pursuant to a showing of compelling circumstances affecting the health or safety of an individual if upon such disclosure, notification is transmitted to the last known address of such individual.

(9) 5 U.S.C. 552a(b)(9)—To either House of Congress, or, to the extent the matter is within its jurisdiction, any committee or subcommittee thereof, or any joint committee of Congress or subcommittee of any such joint committee. Requests from a Congressional member acting on behalf of a constituent are not included in this exception, but may be covered by a routine use exception to the Privacy Act (See applicable Army system of records notice).

(10) 5 U.S.C. 552a(b)(10)—To the Comptroller General or authorized representatives, in the course of the performance of the duties of the Government Accountability Office.

(11) 5 U.S.C. 552a(b)(11)—Pursuant to the order of a court of competent jurisdiction. The order must be signed by a judge.

(12) 5 U.S.C. 552a(b)(12)—To a consumer reporting agency in accordance with section 3711(e) of Title 31 of the U.S. Code. The name, address, SSN, and other information identifying the individual; amount, status, and history of the claim; and the agency or program under which the case arose may be disclosed. However, before doing so, agencies must complete a series of steps designed to validate the debt and to offer the individual an opportunity to repay it.

(d) *DOD Blanket Routine Uses.* In addition to specific routine uses which are listed in the applicable Army system of record notices, certain ''Blanket Routine Uses'' apply to all DOD maintained systems of records. These are listed on the Defense Privacy Office's Web site *http://www.defenselink.mil/privacy/*. These ''Blanket Routine Uses'' are not specifically listed in each system of records notice as the specific routine uses are. The current DOD ''Blanket Routine Uses'' are as follows—

(1) *Law Enforcement Routine Use.* If a system of records maintained by a DOD component to carry out its functions indicates a violation or potential violation of law, whether civil, criminal or regulatory in nature, and whether arising by general statute or by regulation, rule, or order issued pursuant thereto, the relevant records in the system of records may be referred, as a routine use, to the agency concerned, whether federal, state, local, or foreign, charged with the responsibility of investigating or prosecuting such violation or charged with enforcing or implementing the statute, rule, regulation or order issued pursuant thereto.

(2) *Disclosure When Requesting Information Routine Use.* A record from a system of records maintained by a DOD component may be disclosed as a routine use to a Federal, State, or local agency maintaining civil, criminal, or other relevant enforcement information or other pertinent information, such as current licenses, if necessary to obtain information relevant to a DOD Component decision concerning the hiring or retention of an employee, the issuance of a security clearance, the letting of a contract, or the issuance of a license, grant or other benefit.

(3) *Disclosure of Requested Information Routine Use.* A record from a system of records maintained by a DOD component may be disclosed to a Federal agency, in response to its request, in connection with the hiring or retention of an employee, the issuance of a security clearance, the reporting of an investigation of an employee, the letting of a contract, or the issuance of a license, grant, or other benefit by the requesting agency, to the extent that the information is relevant and necessary to the requesting agency's decision on the matter.

(4) *Congressional Inquiries Disclosure Routine Use.* Disclosure from a system of records maintained by a DOD component may be made to a congressional office from the record of an individual in response to an inquiry from the congressional office made at the request of that individual.

(5) *Private Relief Legislation Routine Use.* Relevant information contained in all systems of records of DOD published on or before August 22, 1975, may be disclosed to Office of Management and Budget in connection with the review of private relief legislation, as set forth in OMB Circular A–19, at any stage of the legislative coordination and clearance process as set forth in that Circular.

(6) *Disclosures Required by International Agreements Routine Use.* A record from a system of records maintained by a DOD Component may be disclosed to foreign law enforcement, security, investigatory, or administrative authorities in order to comply with requirements imposed by, or to claim rights conferred in, international agreements and arrangements including those regulating the stationing and status in foreign countries of DOD military and civilian personnel.

(7) *Disclosure to State and Local Taxing Authorities Routine Use.* Any information normally contained in Internal Revenue Service Form W–2, which is maintained in a record from a system of records maintained by a DOD component, may be disclosed to state and local taxing authorities with which the Secretary of the Treasury has entered into agreements pursuant to 5 U.S.C. sections 5516, 5517, and 5520 and only to those state and local taxing authorities for which an employee or military member is or was subject to tax regardless of whether tax is or was withheld. This routine use is in accordance with Treasury Fiscal Requirements Manual Bulletin 76–07.

(8) *Disclosure to the Office of Personnel Management Routine Use.* A record from a system of records subject to the Privacy Act and maintained by a DA activity may be disclosed to the Office of Personnel Management concerning information on pay and leave, benefits, retirement deductions, and any other information necessary for Office of Personnel Management to carry out its legally authorized Government-wide personnel management functions and studies.

(9) *Disclosure to the Department of Justice for Litigation Routine Use.* A record from a system of records maintained by a DOD component may be disclosed as a routine use to any component of the Department of Justice for the purpose of representing the Department of Defense, or any officer, employee, or member of the Department in pending or potential litigation to which the record is pertinent.

(10) *Disclosure to Military Banking Facilities Overseas Routine Use.* Information as to current military addresses and assignments may be provided to military banking facilities who provide banking services overseas and who are reimbursed by the Government for certain checking and

loan losses. For personnel separated, discharged, or retired from the Armed forces, information as to last known residential or home of record address may be provided to the military banking facility upon certification by a banking facility officer that the facility has a returned or dishonored check negotiated by the individual or the individual has defaulted on a loan and that if restitution is not made by the individual, the U.S. Government will be liable for the losses the facility may incur.

(11) *Disclosure of Information to the General Services Administration Routine Use.* A record from a system of records maintained by a DOD component may be disclosed as a routine use to the General Services Administration for the purpose of records management inspections conducted under authority of 44 U.S.C. Sections 2904 and 2906.

(12) *Disclosure of Information to National Archives and Records Administration Routine Use.* A record from a system of records maintained by a DOD component may be disclosed as a routine use to NATIONAL ARCHIVES AND RECORDS ADMINISTRATION for the purpose of records management inspections conducted under authority of 44 U.S.C. sections 2904 and 2906.

(13) *Disclosure to the Merit Systems Protection Board Routine Use.* A record from a system of records maintained by a DOD component may be disclosed as a routine use to the Merit Systems Protection Board, including the Office of the Special Counsel for the purpose of litigation, including administrative procedures, appeals, special studies of the civil service and other merit systems, review of Office of Personnel Management or component rules and regulations, investigation of alleged or possible prohibited personnel practices, including administrative proceedings involving any individual subject of a DOD investigation, and such other functions, promulgated in 5 U.S.C. sections 1205 and 1206, or as may be authorized by law.

(14) *Counterintelligence Purposes Routine Use.* A record from a system of records maintained by a DOD component may be disclosed as a routine use outside the DOD or the U.S. Government for the purpose of counterintelligence activities authorized by U.S. Law or Executive Order or for the purpose of enforcing laws, which protect the national security of the United States.

Appendix E to Part 505—Litigation Status Sheet

(a) Case Number: The number used by a DA activity for reference purposes; Requester;

(b) Document Title or Description: Indicates the nature of the case, such as ''Denial of access'', ''Refusal to amend,'' ''Incorrect records'', or other violations of the Act (specify);

(c) Litigation: Date complaint filed, Court, and Case File Number;

(d) Defendants: DOD component and individual;

(e) Remarks: Brief explanation of what the case is about;

(f) Court action: Court's finding and disciplinary action (if applicable); and

(g) Appeal (If applicable): Date complaint filed, court, case File Number, court's finding, disciplinary action (if applicable).

Appendix F to Part 505—Example of a System of Records Notice

(a) Additional information and guidance on Privacy Act system of records notices are found in DA PAM 25–51. The following elements comprise a Privacy Act system of records notice for publication in the **Federal Register:**

(b) *System Identifier:* A0025–55 AHRC—DA FOIA/P Office assigns the notice number, for example, A0025–55, where ''A'' indicates ''Army,'' the next number represents the publication series number related to the subject matter, and the final letter group shows the system manager's command. In this case, it would be U.S. Army Human Resources Command.

(c) *System Name:* Use a short, specific, plain language title that identifies the system's general purpose (limited to 55 characters).

(d) *System Location:* Specify the address of the primary system and any decentralized elements, including automated data systems with a central computer facility and input or output terminals at separate locations. Use street address, 2-letter state abbreviations and 9-digit ZIP Codes. Spell out office names. Do not use office symbols.

(e) *Categories of Individuals:* Describe the individuals covered by the system. Use non-technical, specific categories of individuals about whom the Department of Army keeps records. Do not use categories like ''all Army personnel'' unless that is truly accurate.

(f) *Categories of Records in the System:* Describe in clear, plain language, all categories of records in the system. List only documents actually kept in the system. Do not identify source documents that are used to collect data and then destroyed. Do not list form numbers.

(g) *Authority for Maintenance of the System:* Cite the specific law or Executive Order that authorizes the maintenance of the system. Cite the DOD directive/instruction or Department of the Army Regulation(s) that authorizes the Privacy Act system of records. Always include titles with the citations. Note: Executive Order 9397 authorizes using the SSN as a personal identifier. Include this authority whenever the SSN is used to retrieve records.

(h) *Purpose(s):* List the specific purposes for maintaining the system of records by the activity.

(i) *Routine Use(s):* The blanket routine uses that appear at the beginning of each Component compilation apply to all systems notice unless the individual system notice specifically states that one or more of them do not apply to the system. Blanket Routine Uses are located at the beginning of the Component listing of systems notices and are not contained in individual system of records notices. However, specific routine uses are listed in each applicable system of records notice. List the specific activity to which the record may be released, for example ''To the Veterans Administration'' or ''To state and local health agencies''. For each routine user identified, include a statement as to the purpose or purposes for which the record is to release to that activity. Do not use general statements, such as ''To other federal agencies as required'' or ''To any other appropriate federal agency''.

(j) *Polices and Practices for Storing, Retrieving, Accessing, Retaining, and Disposing of Records in the System:*

(k) *Storage:* State the medium in which DA maintains the records; for example, in file folders, card files, microfiche, computer, or a combination of those methods. Storage does not refer to the storage container.

(l) *Retrievability:* State how the Army retrieves the records; for example, by name, fingerprints or voiceprints.

(m) *Safeguards:* Identify the system safeguards; for example, storage in safes, vaults, locked cabinets or rooms, use of guards, visitor controls, personnel screening, computer systems software, and so on. Describe safeguards fully without compromising system security.

(n) *Retention and Disposal.* State how long AR 25–400–2 requires the activity to maintain the records. Indicate when or if the records may be transferred to a Federal Records Center and how long the record stays there. Specify when the Records Center sends the record to the National Archives or destroys it. Indicate how the records may be destroyed.

(o) *System Manager(s) and Address:* List the position title and duty address of the system manager. For decentralized systems, show the locations, the position, or duty title of each category of officials responsible for any segment of the system.

(p) *Notification Procedures:* List the title and duty address of the official authorized to tell requesters if their records are in the system. Specify the information a requester must submit; for example, full name, military status, SSN, date of birth, or proof of identity, and so on.

(q) *Record Access Procedures:* Explain how individuals may arrange to access their records. Include the titles or categories of officials who may assist; for example, the system manager.

(r) *Contesting Records Procedures:* The standard language to use is ''The Army's rules for accessing records, and for contesting contents and appealing initial agency determinations are contained in Army Regulation 25–71; 32 CFR part 505; or may be obtained from the system manager.''

(s) *Record Source Categories:* Show categories of individuals or other information sources for the system. Do not list confidential sources protected by 5 U.S.C. 552a(k)(2), (k)(5), or (k)(7).

(t) *Exemptions Claimed for the System:* Specifically list any approved exemption including the subsection in the Act. When a system has no approved exemption, write ''none'' under this heading.

Appendix G to Part 505—Management Control Evaluation Checklist

(a) *Function.* The function covered by this checklist is DA Privacy Act Program.

(b) *Purpose.* The purpose of this checklist is to assist Denial Authorities and Activity Program Coordinators in evaluating the key management controls listed below. This checklist is not intended to cover all controls.

(c) *Instructions.* Answer should be based on the actual testing of key management controls (e.g., document analysis, direct observation, sampling, simulation, other). Answers that indicate deficiencies should be explained and corrective action indicated in supporting documentation. These management controls must be evaluated at least once every five years. Certificate of this evaluation has been conducted and should be accomplished on DA Form 11–2–R (Management Control Evaluation Certification Statement).

Test Questions

a. Is a Privacy Act Program established and implemented in your organization?

b. Is an individual appointed to implement the Privacy Act requirements?

c. Are provisions of AR 25–71 concerning protection of OPSEC sensitive information regularly brought to the attention of managers responsible for responding to Privacy Act requests and those responsible for control of the Army's records?

d. When more than twenty working days are required to respond, is the Privacy Act requester informed, explaining the circumstance requiring the delay and provided an appropriate date for completion.

e. Are Accounting Disclosures Logs being maintained?

Comments: Assist in making this a better tool for evaluating management controls. Submit comments to the Department of Army, Freedom of Information and Privacy Division.

Appendix H to Part 505—Definitions

Function

(a) *Access.* Review or copying a record or parts thereof contained in a Privacy Act system of records by an individual.

(b) *Agency.* For the purposes of disclosing records subject to the Privacy Act, Components of the Department of Defense are considered a single agency. For other purposes including access, amendment, appeals from denials of access or amendment, exempting systems of records, and recordkeeping for release to non-DOD agencies, the Department of the Army is considered its own agency.

(c) *Amendment.* The process of adding, deleting, or changing information in a system of records to make the data accurate, relevant, timely, or complete.

(d) *Computer Matching Agreement.* An agreement to conduct a computerized comparison of two or more automated systems of records to verify eligibility for payments under Federal benefit programs or to recover delinquent debts for these programs.

(e) *Confidential Source.* A person or organization who has furnished information to the Federal Government under an express promise that the person's or the organization's identity would be held in confidence or under an implied promise of such confidentiality if this implied promise was made before September 27, 1975.

(f) *Cookie.* A mechanism that allows the server to store its own information about a user on the user's own computer. Cookies are embedded in the HTML information flowing back and forth between the user's computer and the servers. They allow user-side customization of Web information. Normally, cookies will expire after a single session.

(g) *Defense Data Integrity Board.* The Board oversees and coordinates all computer matching programs involving personal records contained in systems of records maintained by the DOD Component; reviews and approves all computer matching agreements between the Department of Defense (DOD) and other Federal, State, and local governmental agencies, as well as memoranda of understanding when the match is internal to the DOD.

(h) *Disclosure.* The transfer of any personal information from a Privacy Act system of records by any means of communication (such as oral, written, electronic mechanical, or actual review) to any persons, private entity, or government agency, other than the subject of the record, the subject's designated agent or the subject's legal guardian. Within the context of the Privacy Act and this part, this term applies only to personal information that is a part of a Privacy Act system of records.

(i) *Deceased Individuals.* The Privacy Act confers no rights on deceased persons, nor may their next-of-kin exercise any rights for them. However, family members of deceased individuals have their own privacy right in particularly sensitive, graphic, personal details about the circumstances surrounding an individual's death. This information may be withheld when necessary to protect the privacy interests of surviving family members. Even information that is not particularly sensitive in and of itself may be withheld to protect the privacy interests of surviving family members if disclosure would rekindle grief, anguish, pain, embarrassment, or cause a disruption of their peace minds. Because surviving family members use the deceased's Social Security Number to obtain benefits, DA personnel should continue to protect the SSN of deceased individuals.

(j) *Individual.* A living person who is a citizen of the United States or an alien lawfully admitted for permanent residence. The parent or legal guardian of a minor also may act on behalf of an individual. Members of the United States Armed Forces are individuals. Corporations, partnerships, sole proprietorships, professional groups, businesses, whether incorporated or unincorporated, and other commercial entities are not individuals.

(k) *Individual Access.* The subject of a Privacy Act file or his or her designated agent or legal guardian has access to information about them contained in the Privacy Act file. The term individual generally does not embrace a person acting on behalf of a commercial entity (for example, sole proprietorship or partnership).

(l) *Denial Authority (formerly Access and Amendment Refusal Authority).* The Army Staff agency head or major Army commander designated authority by this part to deny access to, or refuse amendment of, records in his or her assigned area or functional specialization.

(m) *Maintain.* Includes keep, collect, use or disseminate.

(n) *Members of the Public.* Individuals or parties acting in a private capacity.

(o) *Minor.* An individual under 18 years of age, who is not married and who is not a member of the Department of the Army.

(p) *Official Use.* Within the context of this part, this term is used when Department of the Army officials and employees have demonstrated a need for the use of any record or the information contained therein in the performance of their official duties.

(q) *Personal Information.* Information about an individual that identifies, relates, or is unique to, or describes him or her, e.g., a social security number, age, military rank, civilian grade, marital status, race, salary, home/office phone numbers, etc.

(r) *Persistent cookies.* Cookies that can be used to track users over time and across different Web sites to collect personal information.

(s) *Personal Identifier.* A name, number, or symbol that is unique to an individual, usually the person's name or SSN.

(t) *System of Records.* A group of records under the control of the DA from which information is filed and retrieved by individuals' names or other personal identifiers assigned to the individuals. System notices for all systems of records must be published in the **Federal Register**. A grouping of records arranged chronologically or subjectively that are not retrieved by individuals' names or identifiers is not a Privacy Act system of records, even though individual information could be retrieved by individuals' names or personal identifiers, such as through a paper-by-paper search.

(u) *Privacy Advisory.* A statement required when soliciting personally identifying information by a Department of the Army Web site and the information is not maintained in a system of records. The Privacy Advisory informs the individual why the information is being solicited and how it will be used.

(v) *Privacy Impact Assessment (PIA).* An analysis, which considers information sensitivity, vulnerability, and cost to a computer facility or word processing center in safeguarding personal information processed or stored in the facility.

(w) *Privacy Act (PA) Request.* A request from an individual for information about the existence of, access to, or amendment of records pertaining to that individual located in a Privacy Act system of records. The request must cite or implicitly refer to the Privacy Act of 1974.

(x) *Protected Personal Information.* Information about an individual that identifies, relates to, is unique to, or describes him or her (e.g., home address, date of birth, social security number, credit card, or charge card account, etc.).

(y) *Records.* Any item, collection, or grouping of information, whatever the storage media (e.g., paper, electronic, etc), about an individual that is maintained by a DOD Component, including but not limited to, his or her education, financial transactions, medical history, criminal or employment history and that contains his or her name, or the identifying number, symbol, or other identifying particular assigned to the individual, such as a finger or voice print or a photograph.

(z) *Records Maintenance and Use.* Any action involving the storage, retrieval, and handling of records kept in offices by or for the agency.

(aa) *Review Authority.* An official charged with the responsibility to rule on administrative appeals of initial denials of requests for notification, access, or amendment of records. Additionally, the Office of Personnel Management is the review authority for civilian official personnel folders or records contained in any other OMP record.

(bb) *Routine Use.* Disclosure of a record outside DOD without the consent of the subject individual for a use that is compatible with the purpose for which the information was collected and maintained by DA. A routine use must be included in the notice for the Privacy Act system of records published in the **Federal Register**.

(cc) *Statistical record.* A record in a system of records maintained for statistical research or reporting purposes and not used in whole or in part in making determinations about specific individuals.

(dd) *System Manager.* An official who has overall responsibility for policies and procedures for operating and safeguarding a Privacy Act system of records.

(ee) *Third-party cookies.* Cookies placed on a user's hard drive by Internet advertising networks. The most common third-party cookies are placed by the various companies that serve the banner ads that appear across many Web sites.

(ff) *Working Days.* Days excluding Saturday, Sunday, and legal holidays.

[FR Doc. 06–6799 Filed 8–9–06; 8:45 am]

BILLING CODE 3710–08–P

Reader Aids

Federal Register

Vol. 71, No. 154

Thursday, August 10, 2006

CUSTOMER SERVICE AND INFORMATION

Federal Register/Code of Federal Regulations	
General Information, indexes and other finding aids	**202–741–6000**
Laws	**741–6000**
Presidential Documents	
Executive orders and proclamations	**741–6000**
The United States Government Manual	**741–6000**
Other Services	
Electronic and on-line services (voice)	**741–6020**
Privacy Act Compilation	**741–6064**
Public Laws Update Service (numbers, dates, etc.)	**741–6043**
TTY for the deaf-and-hard-of-hearing	**741–6086**

ELECTRONIC RESEARCH

World Wide Web

Full text of the daily Federal Register, CFR and other publications is located at: **http://www.gpoaccess.gov/nara/index.html**

Federal Register information and research tools, including Public Inspection List, indexes, and links to GPO Access are located at: **http://www.archives. gov/federal__register/**

E-mail

FEDREGTOC-L (Federal Register Table of Contents LISTSERV) is an open e-mail service that provides subscribers with a digital form of the Federal Register Table of Contents. The digital form of the Federal Register Table of Contents includes HTML and PDF links to the full text of each document.

To join or leave, go to **http://listserv.access.gpo.gov** and select *Online mailing list archives, FEDREGTOC-L, Join or leave the list (or change settings);* then follow the instructions.

PENS (Public Law Electronic Notification Service) is an e-mail service that notifies subscribers of recently enacted laws.

To subscribe, go to **http://listserv.gsa.gov/archives/publaws-l.html** and select *Join or leave the list (or change settings);* then follow the instructions.

FEDREGTOC-L and **PENS** are mailing lists only. We cannot respond to specific inquiries.

Reference questions. Send questions and comments about the Federal Register system to: **fedreg.info@nara.gov**

The Federal Register staff cannot interpret specific documentsor regulations.

FEDERAL REGISTER PAGES AND DATE, AUGUST

43343–43640 1
43641–43954 2
43955–44180 3
44181–44550 4
44551–44882 7
44883–45360 8
45361–45734 9
45735–46072 10

CFR PARTS AFFECTED DURING AUGUST

At the end of each month, the Office of the Federal Register publishes separately a List of CFR Sections Affected (LSA), which lists parts and sections affected by documents published since the revision date of each title.

3 CFR

Proclamations:
7747 (See Proclamation 8039) 43635
8038 43343
8039 43635

Executive Orders:
11651 (See Proclamation 8039) 43635
13222 (See Notice of August 3, 2006) 44551

Administrative Orders:
Notices:
Notice of August 3, 2006 44551
Presidential Determinations:
No. 2006-18 of August 2, 2006 45361

5 CFR

591 43897
1001 43345
2635 45735

Proposed Rules:
890 44592
1653 45437

7 CFR

301 43345
762 43955
922 43641
1218 44553

Proposed Rules:
246 ..... 43371, 44784
250 43992
305 43385
319 43385
352 43385
1421 45744
1483 43992

9 CFR

327 43958
381 43958

Proposed Rules:
3 45438
93 45439
94 45439
95 ..... 44234, 45439
98 45444

10 CFR

Proposed Rules:
20 43996
30 43996
31 43996
32 43996
33 43996
35 43996
50 ..... 43996, 44593
61 43996
62 43996
72 43996
110 43996
150 43996
170 43996
171 43996
431 44356
820 45996
835 45996

12 CFR

268 44555
611 44410

14 CFR

23 ..... 44181, 44182
39 ..... 43352, 43961, 43962, 43964, 44185, 44883, 45363, 45364, 45367, 45368, 45370
43 44187
71 ..... 43354, 43355, 43356, 43357, 44188, 44885
97 ..... 44560, 44562

Proposed Rules:
35 43674
39 ..... 43386, 43390, 43676, 43997, 44933, 44935, 44937, 45447, 45449, 45451, 45454, 45457, 45467, 45471, 45744
71 ..... 43678, 43679, 43680

15 CFR

764 44189

Proposed Rules:
740 44943
742 44943
744 44943
748 44943

16 CFR

305 45371

Proposed Rules:
1307 45904
1410 45904
1500 45904
1515 45904

17 CFR

Proposed Rules:
38 43681

18 CFR

33 45736
42 43564

19 CFR

10 44564
163 44564
178 44564

Proposed Rules:
4 43681

122 43681

20 CFR

416 45375
Proposed Rules:
404 44432

21 CFR

341 43358
510 43967
520 43967
529 43967
558 44886
Proposed Rules:
106 43392
107 43392

24 CFR

Proposed Rules:
91 44860
570 44860

25 CFR

Proposed Rules:
15 45174
18 45174
150 45174
152 45174
179 45174
502 44239
546 44239

26 CFR

1 ....43363, 43968, 44466, 44887, 45379
31 44466
Proposed Rules:
1 ....43398, 43998, 44240, 44247, 44600, 45474
31 44247
602 45474

28 CFR

32 46028

29 CFR

1614 43643
2700 44190
2704 44190
2705 44190

31 CFR

208 44584

32 CFR

362 43652
505 46052
Proposed Rules:
312 44602
318 44603
537 45475

33 CFR

100 ....43366, 44210, 44213
117 ....43367, 43653, 44586, 44914, 45386, 45387
125 44915
165 ....43655, 43973, 43975, 44215, 44217, 45387, 45389, 45391, 45393, 45736
Proposed Rules:
100 43400
110 45746
165 ....43402, 44250

34 CFR

600 45666
668 45666
673 45666
674 45666
675 45666
676 45666
682 45666
685 45666

36 CFR

242 43368

37 CFR

1 44219
201 45739
Proposed Rules:
201 45749

38 CFR

3 44915

40 CFR

9 45720
52 ....43978, 43979, 44587
81 44920
155 45720
180 ....43658, 43660, 43664, 43906, 45395, 45400, 45403, 45408, 45411, 45415
300 43984
Proposed Rules:
52 ....45482, 45485
59 44522
60 45487
61 45487
63 45487
81 ....44944, 45492
122 44252
412 44252

41 CFR

Proposed Rules:
61-300 44945

42 CFR

411 45140
1001 45110
Proposed Rules:
414 44082
484 44082

43 CFR

Proposed Rules:
4 45174
30 45174

44 CFR

64 45424
Proposed Rules:
67 ....45497, 45498

47 CFR

1 43842
54 43667
64 43667
73 ....45425, 45426
Proposed Rules:
Ch. I 45510
1 43406
2 ....43406, 43682, 43687
4 43406
6 43406
7 43406
9 43406
11 43406
13 43406
15 43406
17 43406
18 43406
20 43406
22 43406
24 43406
25 ....43406, 43687
27 43406
52 43406
53 43406
54 43406
63 43406
64 43406
68 43406
73 ....43406, 43703, 45511
74 43406
76 43406
78 43406
79 43406
90 43406
95 ....43406, 43682
97 43406
101 43406

48 CFR

Ch. 1 ....44546, 44549
6 44546
12 44546
26 44546
52 44546
204 44926
219 44926
242 44928
253 44926
Proposed Rules:
1804 43408
1852 43408

49 CFR

171 44929
369 45740
572 45427
594 43985
1420 45740
1507 44223
1572 44874
Proposed Rules:
110 44955
178 44955
601 44957
1111 43703
1114 43703
1115 43703
1244 43703

50 CFR

18 43926
20 45964
21 45964
100 43368
622 45428
635 45428
648 44229
660 44590
679 ....43990, 44229, 44230, 44231, 44591, 44931
680 44231
Proposed Rules:
17 ....43410, 44960, 44966, 44976, 44980, 44988
216 44001
300 45752
622 43706
648 43707

REMINDERS

The items in this list were editorially compiled as an aid to Federal Register users. Inclusion or exclusion from this list has no legal significance.

RULES GOING INTO EFFECT AUGUST 8, 2006

AGRICULTURE DEPARTMENT

Food and Nutrition Service

Food Stamp Program:

Farm Security and Rural Investment Act of 2002; implementation—

Employment and Training Program; published 6-9-06

DEFENSE DEPARTMENT

Defense Acquisition Regulations System

Acquisition regulations:

Contract administration functions; published 8-8-06

Contract reporting; published 8-8-06

Small business specialist review threshold; published 8-8-06

HEALTH AND HUMAN SERVICES DEPARTMENT

Food and Drug Administration

Animal drugs, feeds, and related products:

Oxytetracycline; published 8-8-06

HOMELAND SECURITY DEPARTMENT

Coast Guard

Waterfront facilities and port and harbor areas; maritime identification credentials; clarification

Correction; published 8-8-06

TRANSPORTATION DEPARTMENT

Federal Aviation Administration

Class E airspace; published 6-19-06

TRANSPORTATION DEPARTMENT

Pipeline and Hazardous Materials Safety Administration

Hazardous materials:

Hazardous materials safety and security regulations; terminology definitions, and requirements; statutorily mandated revisions; correction; published 8-8-06

TREASURY DEPARTMENT

Income taxes:

Stock transfer rules; carryover of tax attributes; published 8-8-06

VETERANS AFFAIRS DEPARTMENT

Adjudication: pensions, compensation, dependency, etc.:

Veterans Benefits Act of 2003 and the Veterans Benefits Improvement Act of 2004; implementation; published 8-8-06

COMMENTS DUE NEXT WEEK

AGRICULTURE DEPARTMENT

Agricultural Marketing Service

Avocados grown in South Florida; comments due by 8-16-06; published 7-24-06 [FR E6-11739]

Cherries (sweet) grown in Washington; comments due by 8-18-06; published 6-19-06 [FR E6-09598]

Onions (Vidalia) grown in Georgia; comments due by 8-14-06; published 6-15-06 [FR E6-09235]

AGRICULTURE DEPARTMENT

Animal and Plant Health Inspection Service

Exportation and importation of animals and animal products:

Foot-and-mouth disease and rinderpest; disease status change—

Namibia; comments due by 8-14-06; published 6-15-06 [FR 06-05440]

Poultry improvement:

National Poultry Improvement Plan and auxiliary provisions; amendments; comments due by 8-18-06; published 6-19-06 [FR 06-05468]

AGRICULTURE DEPARTMENT

Forest Service

National Forest System timber; sale and disposal:

Contract modifications in extraordinary conditions; noncompetitive sale; comments due by 8-15-06; published 6-16-06 [FR E6-09424]

AGRICULTURE DEPARTMENT

Natural Resources Conservation Service

Healthy Forests Reserve Program; implementation; comments due by 8-15-06; published 5-17-06 [FR 06-04587]

COMMERCE DEPARTMENT

Foreign-Trade Zones Board

Applications, hearings, determinations, etc.:

Georgia

Eastman Kodak Co.; x-ray film, color paper, digital media, inkjet paper, entertainment imaging, and health imaging; Open for comments until further notice; published 7-25-06 [FR E6-11873]

COMMERCE DEPARTMENT

National Oceanic and Atmospheric Administration

Endangered and threatened species:

Critical habitat designations—

Southern Resident killer whale; comments due by 8-14-06; published 6-15-06 [FR 06-05439]

Fishery and conservation management::

Northeastern United States fisheries—

Atlantic mackerel, squid, and butterfish; comments due by 8-17-06; published 8-2-06 [FR E6-12482]

International fisheries regulations:

Antarctic marine living resources; centralized vessel monitoring system; fresh toothfish imports; comments due by 8-14-06; published 7-13-06 [FR 06-06166]

DEFENSE DEPARTMENT

Defense Acquisition Regulations System

Acquisition regulations:

Aviation into-plane reimbursement card; comments due by 8-15-06; published 6-16-06 [FR E6-09488]

Free trade agreements—

El Salvador, Honduras, and Nicaragua; comments due by 8-15-06; published 6-16-06 [FR E6-09500]

Perishable food, and fish, shellfish, or seafood; Berry Amendment exceptions; comments due by 8-15-06; published 6-16-06 [FR E6-09485]

Protests, disputes, and appeals; comments due by 8-15-06; published 6-16-06 [FR E6-09491]

Security-guard services contracts; comments due by 8-15-06; published 6-16-06 [FR E6-09486]

DEFENSE DEPARTMENT

Acquisition regulations:

Contractor personnel authorized to accompany U.S. Armed Forces; comments due by 8-15-06; published 6-16-06 [FR E6-09499]

EDUCATION DEPARTMENT

Postsecondary education:

Academic Competitiveness Grant and National Science and Mathematics Access to Retain Talent Grant Programs; grant and loan programs amendments; comments due by 8-17-06; published 7-3-06 [FR 06-05937]

ENVIRONMENTAL PROTECTION AGENCY

Air pollutants, hazardous; national emission standards:

Synthetic organic chemical manufacturing industry; comments due by 8-14-06; published 6-14-06 [FR 06-05219]

Air pollution; standards of performance for new stationary sources:

Solid waste incineration units; comments due by 8-14-06; published 6-28-06 [FR E6-10095]

Air quality implementation plans; approval and promulgation; various States; air quality planning purposes; designation of areas:

West Virginia; comments due by 8-14-06; published 7-13-06 [FR E6-11042]

Air quality implementation plans; approval and promulgation; various States; air quality planning purposes; designation of areas:

California; comments due by 8-18-06; published 7-19-06 [FR E6-11450]

Air quality implementation plans; approval and promulgation; various States:

Montana; comments due by 8-18-06; published 7-19-06 [FR E6-11344]

Pennsylvania; Philadelphia-Trenton-Wilmington nonattainment area; comments due by 8-14-06; published 7-14-06 [FR E6-11109]

Pesticides; tolerances in food, animal feeds, and raw agricultural commodities:

Bacillus mycoides isolate J; comments due by 8-14-06; published 6-14-06 [FR E6-09282]
Potassium silicate; comments due by 8-14-06; published 6-14-06 [FR E6-08939]

FEDERAL DEPOSIT INSURANCE CORPORATION
Assessments:
Dividend requirements; implementation; comments due by 8-16-06; published 5-18-06 [FR E6-07585]
One-time assessment credit; implementation; comments due by 8-16-06; published 5-18-06 [FR E6-07583]
Quarterly assessment collection and three-year retention period; comments due by 8-16-06; published 5-18-06 [FR 06-04657]

FEDERAL RETIREMENT THRIFT INVESTMENT BOARD
Thrift Savings Plan:
Service Office and ThriftLine contact information; update; comments due by 8-14-06; published 7-14-06 [FR E6-11064]

FEDERAL TRADE COMMISSION
Industry guides:
Nursery industry guides; comments due by 8-14-06; published 6-13-06 [FR E6-09185]

HOMELAND SECURITY DEPARTMENT
Coast Guard
Drawbridge operations:
Delaware; comments due by 8-14-06; published 6-29-06 [FR E6-10247]
New Jersey; comments due by 8-14-06; published 6-29-06 [FR E6-10249]
Great Lakes pilotage regulations:
Rate adjustments; comments due by 8-14-06; published 7-13-06 [FR E6-11062]
Regattas and marine parades:
Cambridge Offshore Challenge, Choptank River, Cambridge, MD; comments due by 8-14-06; published 7-13-06 [FR E6-10982]
Chesapeakeman Ultra Triathlon, Choptank River, Cambridge, MD; comments due by 8-14-06; published 7-13-06 [FR E6-10976]
Sunset Lake Hydrofest, Wildwood Crest, NJ; comments due by 8-14-06; published 7-13-06 [FR E6-10975]

HOMELAND SECURITY DEPARTMENT
Immigration:
Aliens—
Unauthorized and unlawful hiring or continued employment; safe-harbor procedures for employees who receive a no-match letter; comments due by 8-14-06; published 6-14-06 [FR E6-09303]

HOMELAND SECURITY DEPARTMENT
Immigration and Customs Enforcement Bureau
Immigration regulations:
Employment Eligibility Verification (Form I-9); electronic signature and storage; comments due by 8-14-06; published 6-15-06 [FR E6-09283]

HOUSING AND URBAN DEVELOPMENT DEPARTMENT
Manufactured home installation program; establishment; comments due by 8-14-06; published 6-14-06 [FR 06-05389]
Mortgage and loan insurance programs:
Single family mortgage insurance—
Adjustable rate mortgage; comments due by 8-18-06; published 6-19-06 [FR 06-05494]

INTERIOR DEPARTMENT
Fish and Wildlife Service
Endangered and threatened species:
Appalachian monkeyface mussel et al.; comments due by 8-14-06; published 6-13-06 [FR 06-05233]
Hunting and fishing:
Refuge-specific regulations; comments due by 8-16-06; published 7-24-06 [FR 06-06318]

INTERIOR DEPARTMENT
Surface Mining Reclamation and Enforcement Office
Permanent program and abandoned mine land reclamation plan submissions:
Wyoming; comments due by 8-15-06; published 7-31-06 [FR E6-12188]

MINE SAFETY AND HEALTH FEDERAL REVIEW COMMISSION
Federal Mine Safety and Health Review Commission
Procedural rules, etc.:
Mine Improvement and New Emergency Response Act of 2006; implementation; comments due by 8-17-06; published 7-18-06 [FR E6-11300]

PERSONNEL MANAGEMENT OFFICE
Combined Federal Campaign; eligibility requirements and public accountability standards; comments due by 8-14-06; published 6-29-06 [FR 06-05795]
Health benefits, Federal employees:
Payment of premiums for periods of leave without pay or insufficient pay; comments due by 8-15-06; published 6-16-06 [FR E6-09418]

STATE DEPARTMENT
Legal and related services:
Intercountry adoption; Hague Convention certificates and declarations issuance in Convention adoption cases; comments due by 8-15-06; published 6-16-06 [FR E6-09507]

TRANSPORTATION DEPARTMENT
Federal Aviation Administration
Air carrier certification and operations:
Child restraint systems; additional types that may be furnished and used on aircraft; comments due by 8-14-06; published 7-14-06 [FR E6-11112]
Airworthiness directives:
Air Tractor, Inc.; comments due by 8-18-06; published 6-20-06 [FR E6-09639]
Airbus; comments due by 8-15-06; published 6-16-06 [FR 06-05425]
BAE Systems (Operations) Ltd.; comments due by 8-14-06; published 7-13-06 [FR E6-11022]
Boeing; comments due by 8-14-06; published 6-30-06 [FR 06-05874]
CFM International; comments due by 8-15-06; published 6-16-06 [FR E6-09446]
Fokker; comments due by 8-18-06; published 7-19-06 [FR E6-11416]
Raytheon; comments due by 8-15-06; published 6-16-06 [FR 06-05327]
Class D airspace; comments due by 8-17-06; published 7-18-06 [FR 06-06282]
Class D and Class E airspace; correction; comments due by 8-16-06; published 7-17-06 [FR E6-11168]
Class E airspace; comments due by 8-17-06; published 7-18-06 [FR 06-06281]

TREASURY DEPARTMENT
Internal Revenue Service
Income taxes:
Repeal of tax interest on nonresident alien individuals and foreign corporations received from certain portfolio debt investments; public hearing; comments due by 8-14-06; published 6-13-06 [FR E6-09151]

LIST OF PUBLIC LAWS

This is a continuing list of public bills from the current session of Congress which have become Federal laws. It may be used in conjunction with "P L U S" (Public Laws Update Service) on 202–741–6043. This list is also available online at *http://www.archives.gov/federal-register/laws.html*.

The text of laws is not published in the **Federal Register** but may be ordered in "slip law" (individual pamphlet) form from the Superintendent of Documents, U.S. Government Printing Office, Washington, DC 20402 (phone, 202–512–1808). The text will also be made available on the Internet from GPO Access at *http://www.gpoaccess.gov/plaws/index.html*. Some laws may not yet be available.

H.R. 5877/P.L. 109–267
To amend the Iran and Libya Sanctions Act of 1996 to extend the authorities provided in such Act until September 29, 2006. (Aug. 4, 2006; 120 Stat. 680)

S. 3741/P.L. 109–268
To provide funding authority to facilitate the evacuation of persons from Lebanon, and for other purposes. (Aug. 4, 2006; 120 Stat. 681)

Last List August 4, 2006

Public Laws Electronic Notification Service (PENS)

PENS is a free electronic mail notification service of newly enacted public laws. To

subscribe, go to *http://listserv.gsa.gov/archives/publaws-l.html*

Note: This service is strictly for E-mail notification of new laws. The text of laws is not available through this service. **PENS** cannot respond to specific inquiries sent to this address.