AUTHENTICATED U.S. GOVERNMENT INFORMATION GPO

Federal Register

11–2–06 Thursday
Vol. 71 No. 212 Nov. 2, 2006

Pages 64439–64630

The **FEDERAL REGISTER** (ISSN 0097–6326) is published daily, Monday through Friday, except official holidays, by the Office of the Federal Register, National Archives and Records Administration, Washington, DC 20408, under the Federal Register Act (44 U.S.C. Ch. 15) and the regulations of the Administrative Committee of the Federal Register (1 CFR Ch. I). The Superintendent of Documents, U.S. Government Printing Office, Washington, DC 20402 is the exclusive distributor of the official edition. Periodicals postage is paid at Washington, DC.

The **FEDERAL REGISTER** provides a uniform system for making available to the public regulations and legal notices issued by Federal agencies. These include Presidential proclamations and Executive Orders, Federal agency documents having general applicability and legal effect, documents required to be published by act of Congress, and other Federal agency documents of public interest.

Documents are on file for public inspection in the Office of the Federal Register the day before they are published, unless the issuing agency requests earlier filing. For a list of documents currently on file for public inspection, see *www.archives.gov.*

The seal of the National Archives and Records Administration authenticates the Federal Register as the official serial publication established under the Federal Register Act. Under 44 U.S.C. 1507, the contents of the **Federal Register** shall be judicially noticed.

The **Federal Register** is published in paper and on 24x microfiche. It is also available online at no charge as one of the databases on GPO Access, a service of the U.S. Government Printing Office.

The online edition of the **Federal Register** *www.gpoaccess.gov/nara,* available through GPO Access, is issued under the authority of the Administrative Committee of the Federal Register as the official legal equivalent of the paper and microfiche editions (44 U.S.C. 4101 and 1 CFR 5.10). It is updated by 6 a.m. each day the **Federal Register** is published and includes both text and graphics from Volume 59, Number 1 (January 2, 1994) forward.

For more information about GPO Access, contact the GPO Access User Support Team, call toll free 1-888-293-6498; DC area 202-512-1530; fax at 202-512-1262; or via e-mail at *gpoaccess@gpo.gov.* The Support Team is available between 7:00 a.m. and 9:00 p.m. Eastern Time, Monday–Friday, except official holidays.

The annual subscription price for the **Federal Register** paper edition is $749 plus postage, or $808, plus postage, for a combined **Federal Register, Federal Register** Index and List of CFR Sections Affected (LSA) subscription; the microfiche edition of the **Federal Register** including the **Federal Register** Index and LSA is $165, plus postage. Six month subscriptions are available for one-half the annual rate. The prevailing postal rates will be applied to orders according to the delivery method requested. The price of a single copy of the daily **Federal Register,** including postage, is based on the number of pages: $11 for an issue containing less than 200 pages; $22 for an issue containing 200 to 400 pages; and $33 for an issue containing more than 400 pages. Single issues of the microfiche edition may be purchased for $3 per copy, including postage. Remit check or money order, made payable to the Superintendent of Documents, or charge to your GPO Deposit Account, VISA, MasterCard, American Express, or Discover. Mail to: New Orders, Superintendent of Documents, P.O. Box 371954, Pittsburgh, PA 15250-7954; or call toll free 1-866-512-1800, DC area 202-512-1800; or go to the U.S. Government Online Bookstore site, see *bookstore.gpo.gov.*

There are no restrictions on the republication of material appearing in the **Federal Register.**

How To Cite This Publication: Use the volume number and the page number. Example: 71 FR 12345.

Postmaster: Send address changes to the Superintendent of Documents, Federal Register, U.S. Government Printing Office, Washington DC 20402, along with the entire mailing label from the last issue received.

SUBSCRIPTIONS AND COPIES

PUBLIC

Subscriptions:

Paper or fiche	**202–512–1800**
Assistance with public subscriptions	**202–512–1806**

General online information **202–512–1530; 1–888–293–6498**

Single copies/back copies:

Paper or fiche	**202–512–1800**
Assistance with public single copies	**1–866–512–1800 (Toll-Free)**

FEDERAL AGENCIES

Subscriptions:

Paper or fiche	**202–741–6005**
Assistance with Federal agency subscriptions	**202–741–6005**

FEDERAL REGISTER WORKSHOP

THE FEDERAL REGISTER: WHAT IT IS AND HOW TO USE IT

FOR: Any person who uses the Federal Register and Code of Federal Regulations.

WHO: Sponsored by the Office of the Federal Register.

WHAT: Free public briefings (approximately 3 hours) to present:

1. The regulatory process, with a focus on the Federal Register system and the public's role in the development of regulations.

2. The relationship between the Federal Register and Code of Federal Regulations.

3. The important elements of typical Federal Register documents.

4. An introduction to the finding aids of the FR/CFR system.

WHY: To provide the public with access to information necessary to research Federal agency regulations which directly affect them. There will be no discussion of specific agency regulations.

WHEN: Tuesday, November 14, 2006
9:00 a.m.–Noon

WHERE: Office of the Federal Register
Conference Room, Suite 700
800 North Capitol Street, NW.
Washington, DC 20002

RESERVATIONS: (202) 741–6008

Printed on recycled paper.

Contents

Federal Register

Vol. 71, No. 212

Thursday, November 2, 2006

Agency for Healthcare Research and Quality
NOTICES
Meetings:
Healthcare Research and Quality National Advisory Council, 64526–64527

Agricultural Marketing Service
RULES
Watermelon research and promotion plan; redistricting, 64439–64441
PROPOSED RULES
Grade standards:
Winter pears, 64478
NOTICES
Grade standards:
Mixed commodities, 64509

Agriculture Department
See Agricultural Marketing Service
See Forest Service
See Natural Resources Conservation Service

Centers for Medicare & Medicaid Services
NOTICES
Privacy Act; systems of records, 64527–64535

Coast Guard
NOTICES
Passenger vessels:
Domestic vessel passenger weight; voluntary interim measures, 64546–64547

Commerce Department
See National Oceanic and Atmospheric Administration

Commodity Futures Trading Commission
RULES
Foreign futures and options transactions:
Foreign boards of trade located outside U.S.; requirement to become designated contract market or derivatives transaction execution facility, 64443–64451

Defense Department
See Navy Department
NOTICES
Base closures and reaignments; list; correction, 64513

Employee Benefits Security Administration
NOTICES
Agency information collection activities; proposals, submissions, and approvals, 64564

Energy Department
See Energy Efficiency and Renewable Energy Office

Energy Efficiency and Renewable Energy Office
NOTICES
Meetings:
Hydrogen and Fuel Cell Technical Advisory Committee, 64513–64514

Environmental Protection Agency
RULES
Air quality implementation plans; approval and promulgation; various States:
Colorado, 64465–64468
West Virginia, 64468–64473
Wyoming, 64460–64465
NOTICES
Agency information collection activities; proposals, submissions, and approvals, 64514–64523
Confidential business information and data transfer, 64523–64524
Water supply:
Sole source aquifer designations—
Northern Tug Hill Glacial Aquifer, Various counties, NY, 64524–64525

Executive Office of the President
See Presidential Documents

Federal Aviation Administration
RULES
Airworthiness directives:
Pratt & Whitney, 64441–64443
PROPOSED RULES
Airworthiness directives:
Bell Helicopter Textron, 64484–64488
Bombardier, 64482–64484
Airworthiness standards:
Special conditions—
Boeing Model 777 series airplane, 64478–64482
NOTICES
Agency information collection activities; proposals, submissions, and approvals, 64606

Federal Maritime Commission
NOTICES
Complaints filed:
Transport Express, Inc., et al., 64525–64526

Fish and Wildlife Service
NOTICES
Comprehensive conservation plans; availability, etc.:
San Diego Bay National Wildlife Refuge, CA, 64552–64553
Environmental statements; availability, etc.:
Upper Mississippi River National Wildlife and Fish Refuge, Various states; comprehensive conservation plan, 64553–64555
Environmental statements; notice of intent:
Lincoln County, NV; Coyote Springs Investments Multiple Species Habitat Conservation Plan; public scoping meetings, 64555–64556

Food and Drug Administration
RULES
Animal drugs, feeds, and related products:
Glycopyrrolate, 64451
NOTICES
Agency information collection activities; proposals, submissions, and approvals, 64535–64541

Meetings:
Cellular, Tissue and Gene Therapies Advisory Committee, 64541
Oncologic Drugs Advisory Committee, 64541–64542
Reports and guidance documents; availability, etc.:
Food Allergen Labeling and Consumer Protection Act of 2004; questions and answers regarding food allergens (Edition 4), 64542–64543

Forest Service
NOTICES
Environmental statements; notice of intent:
Clearwater National Forest, ID, 64509–64511

Health and Human Services Department
See Agency for Healthcare Research and Quality
See Centers for Medicare & Medicaid Services
See Food and Drug Administration
NOTICES
Meetings:
Vital and Health Statistics National Committee, 64526

Homeland Security Department
See Coast Guard
See Transportation Security Administration
NOTICES
Privacy Act; systems of records, 64543–64546

Housing and Urban Development Department
NOTICES
Agency information collection activities; proposals, submissions, and approvals, 64548–64552

Interior Department
See Fish and Wildlife Service
See Land Management Bureau
See National Park Service
NOTICES
Meeting:
Delaware and Lehigh National Heritage Corridor Commission, 64552

Internal Revenue Service
RULES
Income taxes:
Confidential transactions, 64458–64460
PROPOSED RULES
Income taxes:
Reportable transactions disclosure requirements; American Jobs Creation Act modifications; cross-reference, 64488–64496
Procedure and administration:
Reportable transactions; disclosure by material advisors; American Jobs Creation Act modifications, 64496–64500
Reportable transactions; material advisors obligation to prepare and maintain lists, 64501–64504

Justice Department
See Prisons Bureau
NOTICES
Reports and guidance documents; availability, etc.:
Federal antidiscrimination, whistleblower protection, and retaliation laws; No FEAR Act notice, 64562–64563

Labor Department
See Employee Benefits Security Administration

Land Management Bureau
NOTICES
Closure of public lands:
Nevada, 64556–64557
Oregon, 64557
Survey plat filings:
Wisconsin, 64557

Maritime Administration
NOTICES
Environmental statements; availability, etc.:
Neptune LNG L.L.C., Liquefied Natural Gas Deepwater Port, MA; license application and public hearings, 64606–64608

National Archives and Records Administration
NOTICES
Meetings:
Electronic Records Archives Advisory Committee, 64565

National Highway Traffic Safety Administration
RULES
Motor vehicle safety standards:
Glazing materials—
Low-speed vehicles, etc.; correction, 64473–64474

National Oceanic and Atmospheric Administration
RULES
Fishery conservation and management:
Western Pacific fisheries—
Bottomfish and seamount groundfish, 64474–64477
NOTICES
Committees; establishment, renewal, termination, etc.:
Climate Change Science Program Product Development Committee for Synthesis and Assessment Product 1.3, 64511–64512
Endangered and threatened species:
Recovery plans—
White abalone, 64512
Marine mammal permit applications, determinations, etc., 64512–64513

National Park Service
NOTICES
Native American human remains, funerary objects; inventory, repatriation, etc.:
Southwest Museum of the American Indian, Autry National Center, Los Angeles, CA, 64558–64561
Thomas Burke Memorial Washington State Museum, University of Washington, Seattle, WA, 64561–64562

National Science Foundation
NOTICES
Antarctic Conservation Act of 1978; permit applications, etc., 64565–64566

Natural Resources Conservation Service
NOTICES
Meetings:
Agricultural Air Quality Task Force, 64511

Navy Department
NOTICES
Privacy Act; systems of records, 64513

Nuclear Regulatory Commission
NOTICES
Environmental statements; notice of intent:
PPL Susquehanna LLC, 64566–64568

Meetings:
Nuclear Waste Advisory Committee, 64568–64570
Reactor Safeguards Advisory Committee, 64570

Presidential Documents
PROCLAMATIONS
Special observances:
National Adoption Month (Proc. 8074), 64611–64614
National Alzheimer's Disease Awareness Month (Proc. 8075), 64615–64616
National American Indian Heritage Month (Proc. 8076), 64617–64618
National Diabetes Month (Proc. 8077), 64619–64620
National Family Caregivers Month (Proc. 8078), 64621–64622
National Hospice Month (Proc. 8079), 64623–64628
Veterans Day (Proc. 8080), 64625–64628
ADMINISTRATIVE ORDERS
Sudan; continuation of national emergency (Notice of November 1, 2006), 64629

Prisons Bureau
PROPOSED RULES
Inmate control, custody, care, etc.:
Drug Abuse Treatment Program; D.C. Code offenders; early release eligibility, 64507–64508
Inmate Work and Performance Pay Program; drug- and alcohol-related disciplinary offenses; pay reduction, 64505–64507
Intensive Confinement Center Program; elimination, 64504–64505
NOTICES
Inmate control, custody, care, etc.:
Incarceration, Federal inmates; average cost annual determination, 64563–64564

Railroad Retirement Board
NOTICES
Agency information collection activities; proposals, submissions, and approvals, 64570–64571

Securities and Exchange Commission
NOTICES
Investment Company Act of 1940:
Pebblebrook Fund, Inc., et al., 64571–64573
Self-regulatory organizations; proposed rule changes:
American Stock Exchange LLC, 64573–64590
Chicago Stock Exchange, Inc., 64590–64594
New York Stock Exchange LLC, 64594–64596
NYSE Arca, Inc., 64596
Philadelphia Stock Exchange, Inc., 64597–64604

State Department
RULES
Legal and related services:
Intercountry adoption; Hague Convention certificates and declarations issuance in Convention adoption cases, 64451–64458

Surface Transportation Board
NOTICES
Railroad services abandonment:
Timber Rock Railroad, Inc., 64608–64609

Tennessee Valley Authority
NOTICES
Reports and guidance documents; availability, etc.:
Federal antidiscrimination, whistleblower protection, and retaliation laws; No FEAR Act notice, 64604–64605

Transportation Department
See Federal Aviation Administration
See Maritime Administration
See National Highway Traffic Safety Administration
See Surface Transportation Board
NOTICES
Agency information collection activities; proposals, submissions, and approvals, 64605–64606

Transportation Security Administration
NOTICES
Agency information collection activities; proposals, submissions, and approvals, 64547–64548

Treasury Department
See Internal Revenue Service

Veterans Affairs Department
NOTICES
Senior Executive Service Performance Review Board; membership, 64609

Separate Parts In This Issue

Part II
Executive Office of the President, Presidential Documents, 64611–64624

Part III
Executive Office of the President, Presidential Documents, 64625–64629

Reader Aids
Consult the Reader Aids section at the end of this issue for phone numbers, online resources, finding aids, reminders, and notice of recently enacted public laws.

To subscribe to the Federal Register Table of Contents LISTSERV electronic mailing list, go to http://listserv.access.gpo.gov and select Online mailing list archives, FEDREGTOC-L, Join or leave the list (or change settings); then follow the instructions.

CFR PARTS AFFECTED IN THIS ISSUE

A cumulative list of the parts affected this month can be found in the Reader Aids section at the end of this issue.

3 CFR

Proclamations:

8074 64613
8075 64615
8076 64617
8077 64619
8078 64621
8079 64623
8080 64627

Executive Orders:

13067 (See Notice of November 1, 2006) 64629
13400 (See Notice of November 1, 2006) 64629
13412 (See Notice of November 1, 2006) 64629

Administrative Orders:

Notices:
Notice of November 1, 2006 64629

7 CFR

1210 64439

Proposed Rules:

51 64478

14 CFR

39 64441

Proposed Rules:

25 64478
39 (2 documents) 64482, 64484

17 CFR

140 64443

21 CFR

522 64451

22 CFR

97 64451

26 CFR

1 64458
301 64458

Proposed Rules:

1 64488
20 64488
25 64488
31 64488
53 64488
54 64488
56 ..... 64496, 64501
301 (2 documents) 64504, 64501

28 CFR

Proposed Rules:

524 64504
545 64505
550 64507

40 CFR

52 (4 documents) 64460, 64465, 64468, 64470

49 CFR

571 64473

50 CFR

665 64474

Rules and Regulations

Federal Register

Vol. 71, No. 212

Thursday, November 2, 2006

This section of the FEDERAL REGISTER contains regulatory documents having general applicability and legal effect, most of which are keyed to and codified in the Code of Federal Regulations, which is published under 50 titles pursuant to 44 U.S.C. 1510.

The Code of Federal Regulations is sold by the Superintendent of Documents. Prices of new books are listed in the first FEDERAL REGISTER issue of each week.

DEPARTMENT OF AGRICULTURE

Agricultural Marketing Service

7 CFR Part 1210

[FV–05–704–FR]

Watermelon Research and Promotion Plan; Redistricting

AGENCY: Agricultural Marketing Service, USDA.

ACTION: Final rule.

SUMMARY: The Department of Agriculture (USDA) is adopting as a final rule, without change, an interim final rule that reapportioned the producer and handler membership on the National Watermelon Promotion Board (Board). The final rule continues in effect the realignment of all seven districts under the Watermelon Research and Promotion Plan (Plan) based on three-year United States production records for watermelons and the assessments paid in each district. The change was proposed by the Board, which administers the nationally coordinated program, in accordance to the provisions of the Plan which require a review of the districts' alignment at least every five years.

DATES: Effective December 4, 2006.

FOR FURTHER INFORMATION CONTACT: Jeanette Palmer, Marketing Specialist, Research and Promotion Branch, FVP, AMS, USDA, Room 0635–S, Stop 0244, 1400 Independence Avenue, SW., Washington, DC 20250–0244; telephone (202) 720–9915 or (888) 720–9917 (toll free); fax: (202) 205–2800; or e-mail *jeanette.palmer@usda.gov.*

SUPPLEMENTARY INFORMATION: This rule is issued under the Watermelon Research and Promotion Plan [7 CFR part 1210]. The Plan is authorized under the Watermelon Research and Promotion Act (Act) 7 U.S.C. 4901–4916].

Executive Orders 12886

The Office of Management and Budget has waived the review process required by Executive Order 12866 for this action.

Executive Order 12988

In addition, this rule has been reviewed under Executive Order 12988, Civil Justice Reform. The rule is not intended to have retroactive effect and will not affect or preempt any other State or Federal law authorizing promotion or research relating to an agricultural commodity.

The Act allows producers, handlers, and importers to file a written petition with the Department of Agriculture (Department) if they believe that the Plan, any provision of the Plan, or any obligation imposed in connection with the Plan, is not established in accordance with the law. The Act provides that the district court of the United States in any district in which the handler is an inhabitant, or has his or her principal place of business, has jurisdiction to review USDA's ruling on the petition, provided an action is filed not later than 20 days after the date of the entry of the ruling.

Regulatory Flexibility Act and Paperwork Reduction Act

In accordance with the Regulatory Flexibility Act (RFA) [5 U.S.C. 601 *et seq.*], the Agricultural Marketing Service has considered the economic impact of this action on the small businesses and has certified that this rule will not have a significant economic impact on a substantial number of small entities. The purpose of the RFA is to fit regulatory action to scale on businesses subject to such action so that small businesses will not be disproportionately burdened.

The Small Business Administration defines, in 13 CFR part 121, small agricultural producers as those having annual receipts of no more than $750,000 and small agricultural service firms (handlers and importers) as those having annual receipts of no more than $6.5 million. Under these definitions, the majority of the producers, handlers, and importers that would be affected by this rule would be considered small entities. Producers of less than 10 acres of watermelons are exempt from this program. Importers of less than 150,000 pounds of watermelons per year are also exempt.

According to the Board, there are approximately 1,301 producers, 442 handlers, and 346 importers who are eligible to serve on the Board.

The Plan requires producers to be nominated by producers, handlers to be nominated by handlers, and importers to be nominated by importers. This will not change. Because some current members are in states or counties which will be moved to other districts under this rule, one handler vacancy in the new District 4, one producer member vacancy in the new District 5, and one handler member vacancy in the new District 2 is created with this rule change. Nomination meetings will be held in the new districts to fill these vacancies.

The overall impact is favorable because the new district boundaries provide more equitable representation for the producers and handlers who pay assessments in the various districts. The current importer membership will not change.

The Board considered several alignments of the districts in an effort to provide balanced representation for each district. The Board selected the alignment described in this rule as it provides proportional representation on the Board of producers, handlers, and importers.

This rule does not impose additional recordkeeping requirements on first handlers, producers, or importers of watermelons because the number of nominees would remain unchanged.

There are no Federal rules that duplicate, overlap, or conflict with this rule.

In accordance with the Office of Management and Budget (OMB) regulation [5 CFR part 1320] which implements the Paperwork Reduction Act of 1995 [44 U.S.C. Chapter 35], the information collection and recordkeeping requirements that are imposed by the Plan have been approved previously under OMB control number 0581–0093. This rule does not result in a change to the information collection and recordkeeping requirements previously approved.

Background

Under the Plan, the Board administers a nationally coordinated program of research, development, advertising, and

promotion designed to strengthen the position of watermelons in the market place and to establish, maintain, and expand markets for watermelons. This program is financed by assessments on producers growing 10 acres or more of watermelons, handlers of watermelons, and importers of 150,000 pounds of watermelons or more per year. The Plan specifies that handlers are responsible for collecting and submitting both the producer and handler assessments to the Board, reporting their handling of watermelons, and maintaining records necessary to verify their reporting(s). Importers are responsible for payment of assessments to the Board on watermelons imported into the United States through the U.S. Customs Service and Border Protection. This action will not have any impact on the assessment rates paid by producers, handlers, and importers.

Membership on the Board consists of two producers and two handlers for each of the seven districts established by the Plan, at least one importer, and one public member. The Board currently has 35 members: 14 producers, 14 handlers, 6 importers, and 1 public member.

The seven current districts were established in 2001. They are:

District 1—The Florida counties of Brevard, Broward, Collier, Dade, Glades, Hardee, Hendry, Highlands, Indian River, Lee, Martin, Monroe, Okeechobee, Osceola, Palm Beach, Polk, and St. Lucie.

District 2—The Florida counties of Alachula, Baker, Bay, Bradford, Calhoun, Charlotte, Citrus, Clay, Columbia, Desoto, Dixie, Duval, Escambia, Flagler, Franklin, Gadsden, Gilchrist, Gulf, Hamilton, Hernando, Hillsborough, Holmes, Jackson, Jefferson, Lafayette, Lake, Leon, Levy, Liberty, Madison, Manatee, Marion, Nassau, Okaloosa, Orange, Pasco, Pinnellas, Putnam, Santa Rosa, Sarasota, Seminole, St. Johns, Sumter, Suwannee, Taylor, Union, Volusia, Wakulla, Walton, and Washington.

District 3—Alabama, Arkansas, Georgia, Louisiana, Mississippi, South Carolina, and Tennessee.

District 4—Connecticut, Delaware, Illinois, Indiana, Iowa, Kansas, Kentucky, Massachusetts, Maryland, Maine, Michigan, Minnesota, Missouri, Nebraska, New Hampshire, New Jersey, New York, North Carolina, North Dakota, Ohio, Oklahoma, Pennsylvania, Rhode Island, South Dakota, Vermont, Virginia, Washington, D.C., West Virginia, and Wisconsin.

District 5—Alaska, Colorado, Hawaii, Idaho, Montana, Nevada, Oregon, Utah, Washington, Wyoming and the California counties of Alameda, Alpine, Amador, Butte, Calaveras, Colusa, Contra Costa, Del Norte, El Dorado, Fresno, Glenn, Humboldt, Inyo, Kern, Kings, Lake, Lassen, Madera, Marin, Mariposa, Mendocino, Merced, Modoc, Mono, Monterey, Napa, Nevada, Placer, Plumas, Sacramento, San Benito, San Francisco, San Joaquin, San Luis Obispo, San Mateo, Santa Barbara, Santa Clara, Santa Cruz, Shasta, Sierra, Siskiyou, Solano, Sonoma, Stanislaus, Sutter, Tehama, Trinity, Tulare, Toulumne, Venture, Yolo, and Yuba.

District 6—Texas.

District 7—Arizona, New Mexico, and the California counties of Imperial, Los Angeles, Orange, Riverside, San Bernardino, and San Diego.

The six importer membership positions on the Board are proportionate to the percentage of assessments paid by the importers. Pursuant to section 1210.320(c) of the Plan, the Board shall review the seven districts to determine whether realignment of the districts is necessary, every five years. When making a review, the Plan specifies that the Board should consider factors such as the most recent three years of USDA production reports or Board assessment reports if USDA production reports are unavailable, shifts and trends in quantities of watermelons produced, and any other relevant factors. Any realignment should be recommended by the Board at least six months prior to the date of the call for nominations and should become effective at least 30 days prior to this date.

Pursuant to section 1210.320 (e), the Secretary shall review importer representation every five years. According to the Plan, the Secretary shall review a three-year average of watermelon import assessments and adjust, to the extent practicable, the number of importers on the Board.

The Board appointed a subcommittee to begin reviewing the U.S. districts and to determine whether realignment was necessary based on production and assessment collections in the current districts. During the review, as prescribed by the Plan, the subcommittee reviewed USDA's Annual Crop Summary reports for 2002 through 2004, which provide figures for the top 17 watermelon producing states, and the Board's assessment collection records for 2002 through 2004. Both sets of data showed similar trends in production among the various states. However, the Board used the assessment reports because USDA's Annual Crop Summary reports were available for only 17 of the 34 states in which watermelons are produced.

The subcommittee recommended to the Board that the boundaries of all seven districts be changed in order for there to be an equal amount of assessments paid by producers and handlers in the districts.

The subcommittee also provided information that the average annual percentage of assessments paid by importers continued to represent 20 percent of the Board's assessment income during 2002 through 2004. Because there was no change in the assessments on imports, it is not necessary to change the number of importer representatives on the Board. Therefore, the number of importer Board members remains at six.

Subsequently, the realignment was approved by the Board at its February 22, 2005, meeting. Under the realignment, each district will represent, on average, 14 percent of total U.S. production. The composition of the Board will remain at a total of 35 members: 14 producers, 14 handlers, 6 importers, and 1 public member.

Therefore, this rule realigns the districts as follows:

District 1—The Florida counties of Brevard, Broward, Charlotte, Citrus, Collier, Dade, DeSoto, Flagler, Glades, Hardee, Hendry, Hernando, Highlands, Hillsborough, Indian River, Lake, Lee, Manatee, Martin, Marion, Monroe, Okeechobee, Orange, Osceola, Palm Beach, Pasco, Pinellas, Polk, Putnam, Sarasota, Seminole, St. Johns, St. Lucie, Sumter, and Volusia.

District 2—The Florida counties of Alachua, Baker, Bay, Bradford, Calhoun, Clay, Columbia, Dixie, Duval, Escambia, Franklin, Gadsden, Gilchrist, Gulf, Hamilton, Holmes, Jackson, Jefferson, Lafayette, Leon, Levy, Liberty, Madison, Nassau, Okaloosa, Santa Rosa, Suwannee, Taylor, Union, Wakulla, Walton, Washington, and the Georgia counties Early, Baker, Miller, Mitchell, Colquitt, Thomas, Grady, Decatur, Seminole, and the states of Alabama, Arkansas, Louisiana, Mississippi, North Carolina, Oklahoma, Tennessee, and Virginia.

District 3—The Georgia counties not included in District two and the state of South Carolina.

District 4—The States of North Dakota, South Dakota, Nebraska, Kansas, Minnesota, Iowa, Illinois, Missouri, Michigan, Indiana, Ohio, Kentucky, West Virginia, Maryland, New Hampshire, Maine, New Jersey, New York, Pennsylvania, Massachusetts, Rhode Island, Delaware, Vermont, Wisconsin, Connecticut, and Washington, DC.

District 5—The States of Alaska, Hawaii, Nevada, Oregon, and

Washington and all of the counties in the state of California except for those California counties included in District Seven.

District 6—The counties in the state of Texas, except for those counties in Texas included in District Seven.

District 7—The counties in the state of Texas; Dallam, Sherman, Hanaford, Ochiltree, Lipscomb, Hartely, Moore, Hutchinson, Roberts, Hemphill, Oldham, Potter, Carson, Gray, Wheeler, Deaf Smith, Randall, Armstrong, Donley, Collingsworth, Parmer, Castro, Swisher, Briscoe, Hall, Childness, Bailey, Lamb, Hale, Floyd, Motley, Cottle, Cochran, Hockely, Lubbock, Crosby, Dickens, King, Yoakum, Terry, Lynn, Garza, Kent, Stonewall, the states of New Mexico, Arizona, Utah, Colorado, Idaho, Montana, and Wyoming, and the following counties in California; San Bernardino, Riverside, San Diego, and Imperial.

Under this realignment: (1) Eighteen Florida counties are moved from District 2 to District 1; (2) Alabama, Arkansas, Louisiana, Mississippi, and Tennessee are moved from District 3 to District 2; (3) North Carolina, Virginia and Oklahoma are moved from District 4 to District 2; (4) Georgia counties Early, Baker, Miller, Colquitt, Thomas, Grady, Decatur, and Seminole are moved from District 3 to District 2; (5) Montana, Idaho, Wyoming, Utah and Colorado are moved from District 5 to District 7; (6) Texas counties Dallam, Sherman, Hanaford, Ochiltree, Lipscomb, Hartely, Moore, Hutchinson, Roberts, Hemphill, Oldham, Potter, Carlson, Gray, Wheeler, Deaf Smith, Randall, Armstrong, Donley, Collingsworth, Parmer, Castro, Swisher, Briscoe, Hall, Childness, Bailey, Lamb, Hale, Floyd, Motley, Cottle, Cochran, Hockely, Lubbock, Crosby, Dickens, King, Yoakum, Terry, Lynn, Garza, Kent, and Stonewall, are moved from District 6 to District 7; and (7) California counties Los Angeles and Orange are moved from District 7 to District 5.

Due to the re-alignment of the districts the following vacancies are created: one handler vacancy in District 4, one handler vacancy in District 2, and one producer vacancy in District 5. Current Board members would be affected because their states or counties would be moved to other districts. Nomination meetings will be held as soon as possible in the new districts to fill the vacancies.

An interim final rule that re-aligned the districts under the Plan was published in the **Federal Register** on June 14, 2006. Copies of the rule were made available through the Internet by USDA and the Office of the Federal Register. That rule provided a 30-day comment period which ended July 15, 2006. Two comments were received by the deadline.

Two unfavorable comments were received. The commenters' state that USDA should not be marketing the agribusiness products at the expense of the taxpayers; however, the Board is industry-funded and, as such, taxpayers' dollars are not expended on this program.

After consideration of all relevant material presented including comments, the Board's recommendation, and other information, it is found that finalizing the interim final rule, without change, as published in the **Federal Register** (71 FR 34232) on June 14, 2006, will tend to effectuate the declared policy of the Act.

List of Subjects in 7 CFR Part 1210

Administrative practice and procedure, Advertising, Consumer information, Marketing agreements, Reporting and recordkeeping requirements, Watermelon promotion.

■ 1. The authority citation for 7 CFR part 1210 continues to read as follows:

Authority: 7 U.S.C. 4901–4916.

PART 1210—WATERMELON RESEARCH AND PROMOTION PLAN

■ The interim final rule amending of 7 CFR part 1210, which was published in the June 14, 2006, **Federal Register** at 71 FR 34232 is adopted without change.

Dated: October 27, 2006.

Lloyd C. Day,

Administrator, Agricultural Marketing Service.

[FR Doc. E6–18517 Filed 11–1–06; 8:45 am]

BILLING CODE 3410–02–P

DEPARTMENT OF TRANSPORTATION

Federal Aviation Administration

14 CFR Part 39

[Docket No. FAA–2006–24487; Directorate Identifier 2006–NE–13–AD; Amendment 39–14810; AD 2006–22–13]

RIN 2120–AA64

Airworthiness Directives; Pratt & Whitney PW4074, PW4074D, PW4077, PW4077D, PW4084D, PW4090, PW4090–3, and PW4098 Turbofan Engines

AGENCY: Federal Aviation Administration (FAA), Department of Transportation (DOT).

ACTION: Final rule.

SUMMARY: The FAA is adopting a new airworthiness directive (AD) for Pratt & Whitney PW4074, PW4074D, PW4077, PW4077D, PW4084D, PW4090, PW4090–3, and PW4098 turbofan engines, with certain front turbine hub part numbers installed. This AD requires a onetime visual inspection of the anti-rotation slots in the front turbine hub, for a machining nonconformance, and its replacement if the inspection failed. This AD results from a report of a crack found in an anti-rotation slot of a front turbine hub, during overhaul shop inspection. The anti-rotation slot geometry was not machined in conformance with the design drawing during manufacture. We are issuing this AD to prevent uncontained engine failure, damage to the airplane, and injury to passengers.

DATES: This AD becomes effective December 7, 2006. The Director of the Federal Register approved the incorporation by reference of certain publications listed in the regulations as of December 7, 2006.

ADDRESSES: You can get the service information identified in this AD from Pratt & Whitney, 400 Main St., East Hartford, CT 06108; telephone (860) 565–8770; fax (860) 565–4503.

You may examine the AD docket on the Internet at *http://dms.dot.gov* or in Room PL–401 on the plaza level of the Nassif Building, 400 Seventh Street, SW., Washington, DC.

FOR FURTHER INFORMATION CONTACT: Antonio Cancelliere, Aerospace Engineer, Engine Certification Office, FAA, Engine and Propeller Directorate, 12 New England Executive Park, Burlington, MA 01803; telephone (781) 238–7751; fax (781) 238–7199.

SUPPLEMENTARY INFORMATION: The FAA proposed to amend 14 CFR part 39 with a proposed AD. The proposed AD applies to Pratt & Whitney PW4074, PW4074D, PW4077, PW4077D, PW4084D, PW4090, PW4090–3, and PW4098 turbofan engines, with certain front turbine hub part numbers installed. We published the proposed AD in the **Federal Register** on June 9, 2006 (71 FR 33412). That action proposed to require a onetime visual inspection of the anti-rotation slots in the front turbine hub, for a machining nonconformance, and its replacement if the inspection failed.

Examining the AD Docket

You may examine the docket that contains the AD, any comments received, and any final disposition in person at the Docket Management Facility Docket Office between 9 a.m. and 5 p.m., Monday through Friday,

except Federal holidays. The Docket Office (telephone (800) 647–5227) is located on the plaza level of the Department of Transportation Nassif Building at the street address stated in **ADDRESSES**. Comments will be available in the AD docket shortly after the DMS receives them.

Comments

We provided the public the opportunity to participate in the development of this AD. We have considered the comments received.

Request To Allow Use of Electro-Chemical Etch

United Airlines requests that we allow using the electro-chemical etch method for marking parts in this AD, as an alternate marking method. The commenter states that the electro-chemical etch method is better because it leaves no raised metal to wear on other mating parts. We agree, provided that the electro-chemical etch instructions from Pratt & Whitney are followed. Those instructions can be found in Pratt & Whitney's Cleaning, Inspection, and Repair Manual, part number 51A750, and in their Standard Practices Manual, part number 585005. Because the marking instructions are part of the service bulletin paragraphs that we incorporated by reference, we did not change the AD.

Request To Eliminate Reporting Requirement

United Airlines requests that we eliminate the reporting requirement of inspection findings, from the AD. The commenter states that the reporting will not enhance airworthiness. We agree. However, our proposed AD incorporates by reference paragraphs 1.A. through 1.C.(2) of the Accomplishment Instructions of Pratt & Whitney Service Bulletin No. PW4G–112–72–282, Revision 1, dated March 3, 2006, which do not require reporting. We did not change the AD.

Request To Change Compliance Paragraph (e)

Pratt & Whitney requests that we change compliance paragraph (e), which states that you are responsible for having the actions required by this AD performed at the next exposure of the rear side of the front turbine hub after the effective date of this AD, unless the actions have already been done. They state that this could be interpreted to mean that the engine must be disassembled and inspected because the front turbine hub is not at piece-part level.

We agree. We changed paragraph (e) in the AD to read ''you are responsible for having the actions required by this AD performed at the next disassembly at piece-part level of the front turbine hub after the effective date of this AD, unless the actions have already been done.''

Conclusion

We carefully reviewed the available data, including the comments received, and determined that air safety and the public interest require adopting the AD with the changes described. We determined that these changes will neither increase the economic burden on any operator nor increase the scope of the AD.

Costs of Compliance

We estimate that this AD will affect 117 Pratt & Whitney PW4074, PW4074D, PW4077, PW4077D, PW4084D, PW4090, PW4090–3, and PW4098 turbofan engines installed on airplanes of U.S. registry. We also estimate that it will take one work-hour per engine to perform the actions, and that the average labor rate is $80 per work-hour. A replacement front turbine hub will cost about $253,000 for a PW4074, PW4074D, PW4077, PW4077D, or PW4084D engine, and about $283,000 for a PW4090, PW4090–3, or PW4098 engine. To date, the failure rate of inspected front turbine hubs is ten per cent. Therefore, we expect the cost of the AD to U.S. operators to be $3,144,960.

Authority for This Rulemaking

Title 49 of the United States Code specifies the FAA's authority to issue rules on aviation safety. Subtitle I, section 106, describes the authority of the FAA Administrator. Subtitle VII, Aviation Programs, describes in more detail the scope of the Agency's authority.

We are issuing this rulemaking under the authority described in subtitle VII, part A, subpart III, section 44701, ''General requirements.'' Under that section, Congress charges the FAA with promoting safe flight of civil aircraft in air commerce by prescribing regulations for practices, methods, and procedures the Administrator finds necessary for safety in air commerce. This regulation is within the scope of that authority because it addresses an unsafe condition that is likely to exist or develop on products identified in this rulemaking action.

Regulatory Findings

We have determined that this AD will not have federalism implications under Executive Order 13132. This AD will not have a substantial direct effect on the States, on the relationship between the national government and the States, or on the distribution of power and responsibilities among the various levels of government.

For the reasons discussed above, I certify that this AD:

(1) Is not a ''significant regulatory action'' under Executive Order 12866;

(2) Is not a ''significant rule'' under DOT Regulatory Policies and Procedures (44 FR 11034, February 26, 1979); and

(3) Will not have a significant economic impact, positive or negative, on a substantial number of small entities under the criteria of the Regulatory Flexibility Act.

We prepared a summary of the costs to comply with this AD and placed it in the AD Docket. You may get a copy of this summary at the address listed under **ADDRESSES**.

List of Subjects in 14 CFR Part 39

Air transportation, Aircraft, Aviation safety, Incorporation by reference, Safety.

Adoption of the Amendment

■ Accordingly, under the authority delegated to me by the Administrator, the Federal Aviation Administration amends 14 CFR part 39 as follows:

PART 39—AIRWORTHINESS DIRECTIVES

■ 1. The authority citation for part 39 continues to read as follows:

Authority: 49 U.S.C. 106(g), 40113, 44701.

§ 39.13 [Amended]

■ 2. The FAA amends § 39.13 by adding the following new airworthiness directive:

2006–22–13 Pratt & Whitney: Amendment 39–14810. Docket No. FAA–2006–24487; Directorate Identifier 2006–NE–13–AD.

Effective Date

(a) This airworthiness directive (AD) becomes effective December 7, 2006.

Affected ADs

(b) None.

Applicability

(c) This AD applies to Pratt & Whitney PW4074, PW4074D, PW4077, PW4077D, PW4084D, PW4090, PW4090–3, and PW4098 turbofan engines, with front turbine hub part numbers 50L761, 52L701, 55L221, 52L901, 53L121, 55L521, and 53L021, installed. These engines are installed on, but not limited to, Boeing 777 airplanes.

Unsafe Condition

(d) This AD results from a report of a crack found in an anti-rotation slot of a front turbine hub, during overhaul shop

inspection. The anti-rotation slot geometry was not machined in conformance with the design drawing during manufacture. We are issuing this AD to prevent uncontained engine failure, damage to the airplane, and injury to passengers.

Compliance

(e) You are responsible for having the actions required by this AD performed at the next disassembly at piece-part level of the front turbine hub after the effective date of this AD, unless the actions have already been done.

Onetime Visual Inspection

(f) For front turbine hubs listed by part number and serial number in Table 1, Table 2, and Table 3 of Pratt & Whitney Service Bulletin (SB) No. PW4G–112–72–282, Revision 1, dated March 3, 2006, do the following:

(1) Perform a onetime visual inspection for extra fillet radii in the anti-rotation slots.

(2) Use paragraphs 1.A. through 1.C.(2) of the Accomplishment Instructions of Pratt & Whitney SB No. PW4G–112–72–282, Revision 1, dated March 3, 2006, to do the inspection.

(3) Remove from service any front turbine hub that has extra fillet radii in the anti-rotation slots and install a serviceable front turbine hub.

Prohibition of Front Turbine Hubs That Have Extra Fillet Radii in the Anti-Rotation Slots

(g) After the effective date of this AD, do not install any front turbine hub that has extra fillet radii in the anti-rotation slots, onto any engine.

Previous Credit

(h) Previous credit is allowed for front turbine hubs inspected using Pratt & Whitney SB No. PW4G–112–72–282, dated February 27, 2006, or Revision 1, dated March 3, 2006, before the effective date of this AD.

Alternative Methods of Compliance

(i) The Manager, Engine Certification Office, has the authority to approve alternative methods of compliance for this AD if requested using the procedures found in 14 CFR 39.19.

Material Incorporated by Reference

(j) You must use Pratt & Whitney Service Bulletin No. PW4G–112–72–282, Revision 1, dated March 3, 2006, to perform the actions required by this AD. The Director of the Federal Register approved the incorporation by reference of this service bulletin in accordance with 5 U.S.C. 552(a) and 1 CFR part 51. Contact Pratt & Whitney, 400 Main St., East Hartford, CT 06108; telephone (860) 565–8770; fax (860) 565–4503, for a copy of this service information. You may review copies at the FAA, New England Region, Office of the Regional Counsel, 12 New England Executive Park, Burlington, MA; or at the National Archives and Records Administration (NARA). For information on the availability of this material at NARA, call 202–741–6030, or go to: *http://www.archives.gov/federal-register/cfr/ibr-locations.html.*

Issued in Burlington, Massachusetts, on October 24, 2006.

Peter A. White,

Acting Manager, Engine and Propeller Directorate, Aircraft Certification Service.

[FR Doc. E6–18368 Filed 11–1–06; 8:45 am]

BILLING CODE 4910–13–P

COMMODITY FUTURES TRADING COMMISSION

17 CFR Part 140

Boards of Trade Located Outside of the United States and No-Action Relief From the Requirement To Become a Designated Contract Market or Derivatives Transaction Execution Facility

AGENCY: Commodity Futures Trading Commission.

ACTION: Policy statement.

SUMMARY: The Commodity Futures Trading Commission is issuing a Statement of Policy that affirms the use of the no-action process to permit foreign boards of trade to provide direct access to their electronic trading systems to U.S. members or authorized participants, and provides additional guidance and procedural enhancements.[1]

DATES: *Effective Date:* November 2, 2006.

FOR FURTHER INFORMATION CONTACT: Robert Rosenfeld, Deputy Director, Office of International Affairs, 202–418–5423, *rrosenfeld@cftc.gov*; Julian Hammar, Counsel, Office of the General Counsel, 202–418–5118, *jhammar@cftc.gov*; or Duane Andresen, Special Counsel, Division of Market Oversight, 202–418–5492, *dandresen@cftc.gov*, Commodity Futures Trading Commission, Three Lafayette Centre, 1155 21st Street, NW., Washington, DC 20581.

SUPPLEMENTARY INFORMATION:

Background

Since 1996, staff of the Commodity Futures Trading Commission (CFTC or Commission) has issued no-action letters[2] to foreign boards of trade stating, subject to compliance with certain conditions, that it will not recommend that the Commission take enforcement action if the foreign board of trade provides its members or participants in the United States access to its electronic trading system without seeking designation under the Commodity Exchange Act (CEA or Act) as a contract market (DCM) or registration as a derivatives transaction execution facility (DTEF).[3] In 1998 the Commission imposed a moratorium on the issuance of such no-action letters pending the development of rules governing access to automated foreign boards of trade.[4] During this period, the Commission received extensive comment on the proposed rulemaking, as well as advice from the Commission's Global Markets Advisory Committee and a Public Round Table. Because of the general lack of consensus on many of the fundamental issues surrounding access to foreign boards of trade, the Commission withdrew the proposed rules in an order that also directed the staff:

> To begin immediately processing no-action requests from foreign boards of trade seeking to place trading terminals in the United States, and to issue responses where appropriate, pursuant to the general guidelines included in the Eurex (DTB) no-action process, or other guidelines established by the Commission, to be reviewed and applied as appropriate on a case-by-case basis.[5]

[1] Commission Rule 140.12, 17 CFR § 140.12 Disposition of business by seriatim Commission consideration.

[2] *See* Commission Rule 140.99, 17 CFR 140.99 (2006), which defines the term ''no-action letter'' as a written statement issued by the staff of a Division of the Commission or of the Office of the General Counsel that it will not recommend enforcement action to the Commission for failure to comply with a specific provision of the Act or of a Commission rule, regulation or order if a proposed transaction is completed or a proposed activity is conducted by the beneficiary.

[3] These letters, hereinafter referred to generally as ''no-action letters'' are published on the Commission's Web site at: *http://www.cftc.gov/dea/deaforeignterminaltable.htm*. Reference to DTEFs in the no-action letters was added following the establishment of that category by the Commodity Futures Modernization Act of 2000.

Although the letters refer to the placement of ''terminals,'' the continued use of that term does not accurately reflect advances in technology, such as open network systems accessible through the Internet.

[4] 63 FR 39779 (July 24, 1998) (Concept Release); 64 FR 14159 (March 24, 1999) (Proposed Rules). Under the terms of a letter dated June 3, 1998 to Eurex Deutschland, the Division of Trading and Markets modified the terms of the original 1996 no-action letter to the effect that Eurex members who were not already operating U.S.-based Eurex Terminals generally were prevented from placing Eurex terminals in the U.S. absent written authorization from the Division, pending adoption of Commission rules regarding electronic access to foreign exchanges.

[5] Commission Order dated June 2, 1999, 64 FR 32829, 32830 (June 18, 1999). The Eurex-DTB no-action process referred to by the Commission in its 1999 Order lifting the moratorium was set forth in a letter dated February 29, 1996 from Andrea Corcoran, Director, Division of Trading and Markets to Lawrence Hunt, Jr., pp. 12–13 (the DTB no-action letter). CFTC Letter 96–28, indexed at *http://www.cftc.gov/opa/summaries/opanal96.htm*; [1994–1995 Transfer Binder] Comm. Fut. L. Rep. (CCH) ¶ 26,669 at 43,795–43,802 (February 29, 1996). On June 18, 1998, the DTB changed its name

Continued

Following the lifting of the moratorium in 1999, the relevant Commission operating division has issued seventeen additional no-action letters.[6] The Commission generally has not observed regulatory problems or financial harm to participants who are accessing the foreign boards of trade pursuant to the staff no-action relief letters. Moreover, the no-action process has been resilient throughout a period of increasing global competition, technological advances, changing ownership structures and evolving business models.

In 2006, ICE Futures, a U.K. registered investment exchange that provides direct access to its U.S. members pursuant to a CFTC staff foreign terminal no-action letter, notified the Commission that it would list a contract on West Texas Intermediate light sweet crude oil whose settlement price would be linked to contracts traded on the New York Mercantile Exchange (NYMEX). ICE's notification prompted the Commission's Division of Market Oversight (DMO) to advise ICE Futures that the ''Commission will be evaluating the use of the no-action process in light of significant issues raised by the factual circumstances underlying the subject notice.'' [7] Among other things, the trading of such contracts made ripe the re-examination of certain dormant issues respecting the Commission's statutory obligations to maintain the integrity of U.S. markets and to protect U.S. customers, particularly the Commission's market surveillance obligations. Accordingly, on May 3, 2006, the Commission directed its staff to initiate a formal process to define what constitutes a ''board of trade, exchange, or market located outside the United States, its territories or possessions'' as that phrase is used in section 4(a) of the CEA and in furtherance of that process scheduled a public hearing.[8] The Commission also issued a related Request for Public Comment.[9]

Hearing and Request for Comment

Participants at the Commission's Hearing and comments submitted in response to the Request for Comment (all collectively the ''commenters''),[10] were generally supportive of the no-action process, praising the process in general for its flexibility.[11] Many commenters suggested that the Commission should retain in large measure the essential contours of the no-action process.[12]

Commenters warned against any mechanistic approaches to determining whether an otherwise foreign organized exchange that permits direct electronic access by its U.S. members or participants is not located ''outside'' the United States for purposes of section 4(a) of the CEA, particularly questioned the use of volume as a proxy for U.S. presence (noting that its fluctuations could result in regulatory uncertainty), and stressed the need to avoid rigid or ''bright line'' tests.[13] Some commenters favored a totality of circumstances approach to location,[14] while others urged the Commission to look to indicators of physical location, such as the main location of an exchange's infrastructure, its employees and headquarters.[15]

Market users stressed the need to maintain high levels of customer and market protections, particularly where a product might impact pricing in U.S. markets.[16] Many U.S. exchanges requested that the Commission give greater attention to competitive issues, particularly when there is direct competition between a U.S. exchange and a foreign exchange's products. U.S. exchanges in particular stressed the need for ''regulatory parity.'' [17] Some commenters warned against taking actions that inadvertently could result in policies that may inhibit the ability of U.S. exchanges and firms to operate globally.[18] Others stressed the need to provide regulatory certainty generally with respect to the applicability of the no-action process and to clarify the treatment of intermediated electronic access.[19]

Need for the Policy Statement

As made clear at the Hearing and by the written comments, the intensity of concerns with respect to the no-action process has been exacerbated by the global competitive environment. In particular, these concerns have called into question: (1) The Commission's authority for the no-action process in light of Section 4(a)'s exclusion from the contract market designation requirement for foreign boards of trade, (2) the continued appropriateness of the no-action process generally, (3) whether objective threshold standards should be developed that would indicate that a board of trade is no longer located outside the United States for purposes of section 4(a) of the CEA, (4) whether enhancements to the no-action process may be necessary, particularly where trading may implicate domestic futures and cash markets, and (5) how the no-action process relates to perceived competitive issues.

---

to Eurex Deutschland, a step toward a planned merger with the Swiss Options and Financial Futures Exchange. *See* 63 FR 39779, 39781 (July 24, 1998) at fn. 12.

[6] The Commission's Division of Market Oversight (successor to the market supervisory responsibilities previously performed by the Division of Trading and Markets) is responsible for issuance of the direct access no-action letters.

[7] *See* letter dated January 31, 2006 from Richard A. Shilts, Director, Division of Market Oversight to Mark Woodward, Regulation and Compliance Policy Manager, ICE Futures. *http://www.cftc.gov/files/dea/cftclettertoicefutures.pdf.*

[8] *See* Sunshine Act Meeting Notice, 71 FR 30665 (May 30, 2006); corrected at 71 FR 32059 (June 2, 2006). The hearing was conducted on June 27, 2006, at the Commission's headquarters in Washington, DC.

[9] *See* 71 FR 34070 (June 13, 2006). The Commission requested comment on the issues related to developing an objective standard establishing a threshold that, if crossed by a foreign board of trade that permits direct access, would indicate that the board of trade is no longer outside the United States and, accordingly, may be required to become registered under the CEA.

[10] A transcript of the Commission's *Hearing on what constitutes a board of trade located outside the United States under the Commodity Exchange Act section 4(a) (June 27, 2006)*, (''Hearing Tr.'') as well as all comment letters (''CL''), are located in comment file 06–002 to 17 FR 34070 (June 13, 2006). *http://www.cftc.gov/foia/comment06/foi06-002_1.htm.*

[11] For comments supporting the no-action letter process generally, *see, e.g.*, Comments of Nicholas Weinreb, Euronext, Hearing Tr. at 45 (''The no-action letter regime has been an extraordinarily successful one.''); comments of Benn Steil, Director of International Economics, Council of Foreign Relations, in his personal capacity, Hearing Tr. at 49 (''I think it is exceptionally important to acknowledge just how successful the Commission's no-action regime has been * * *''); For favorable hearing participant comments on the flexibility of the no-action letter process, *see, e.g.*, Comments of John Foyle, Euronext Liffe, Hearing Tr. at 46; Comments of Richard Berliand, JP Morgan Securities, Hearing Tr. at 61; Comments of Nicholas Weinreb, Euronext, Hearing Tr. at 174.

[12] *See, e.g.*, CL 2 (New York Board of Trade) at 3; CL 3 (Council of Foreign Relations) at 2; CL 6 (ICE Futures Exchange) at 9–10; CL 7 (Minneapolis Grain Exchange) at 2; CL 8 (Bundesanstalt für Finanzdienstleitungsaufsicht) at 3; CL 16 (World Federation of Exchanges) at 1; CL 19 (Tokyo Stock Exchange) at 2; CL 22 (Federation of European Securities Exchanges) at 4; CL 23 (Eurex Deutschland) at 11; CL 24 (Euronext Liffe) at 5; CL 25 (Chicago Board of Trade) at 1; CL 28 (Futures Industry Association) at 9; and CL 45 (Committee of European Securities Regulators) at 1.

[13] *See, e.g.*, CL 2 (New York Board of Trade) at 2–3; CL 6 (ICE Futures Exchange) at 6–7; CL 9 (Chicago Mercantile Exchange) at 6; CL 23 (Eurex Deutschland) at 7; CL 25 (Chicago Board of Trade) at 9–10.

[14] *See, e.g.*, CL 22 (Federation of European Securities Exchanges) at 3.

[15] *See, e.g.*, CL 6 (ICE Futures) at 2; CL 9 (Chicago Mercantile Exchange) at 6.

[16] *See, e.g.*, CL 5 (New England Fuel Institute) at 2; CL 27 (Industrial Energy Consumers of America) at 1.

[17] *See, e.g.*, CL 7 (Minneapolis Grain Exchange) at 1; CL 25 (Chicago Board of Trade) at 5–6; and CL 43 (New York Mercantile Exchange) at 10.

[18] *See, e.g.*, CL 2 (New York Board of Trade) at 3.

[19] *See, e.g.*, CL 28 (Futures Industry Association) at 8.

Continued ambiguity with respect to these fundamental issues could result in an unacceptable degree of uncertainty that may hinder access by U.S. users to global products and markets, inhibit continued innovation in technology and products, and undermine the ability of U.S. markets and intermediaries to structure their business to compete globally. Accordingly, the Commission is issuing this Statement of Policy in order to provide greater regulatory certainty and transparency to issues surrounding access to foreign boards of trade.

Statement of Policy Regarding the Processing of No-Action Requests by Foreign Boards of Trade to Provide Direct Electronic Access to Their U.S. Members or Authorized Participants

Since 1996, foreign boards of trade planning to permit members or other participants located in the United States to enter trades directly into that foreign board of trade's trade matching system (''direct access'')[20] have sought staff no-action letters.

This Statement of Policy provides guidance for processing requests for no-action relief. The Commission intends that this Statement of Policy will ensure the consistent treatment of requests and the application of an appropriate degree of review, while maintaining the ability to respond to the individual factual circumstances raised by particular requests.

The Commission's Statement of Policy takes into account the Commission's desire to facilitate access to markets and products, foster innovation and competition and eliminate unnecessary regulatory burdens, while maintaining customer and market protections mandated by the CEA. The adoption by the Commission of such a flexible and adaptable policy is consistent with Congressional findings that accompanied the enactment of the Commodity Futures Modernization Act of 2000 (CFMA).[21]

I. The Commission's Authority for the No-Action Process

A. Relevant Statutory Considerations: The Commodity Exchange Act Circumscribes the Commission's Authority Over Foreign Boards of Trade

Section 4(a) of the CEA provides that a futures contract may be traded lawfully in the U.S. only if, among other things, it is traded on or subject to the rules of a board of trade that has been designated as a contract market or registered as a DTEF.[22] Section 4(a) excludes from the designation requirement contracts made on or subject to the rules of a board of trade, exchange, or market located outside the United States, its territories or possessions.''[23]

Section 4(b) of the CEA, which authorizes the Commission to adopt rules governing the offer and sale of foreign futures and options contracts, explicitly prohibits the Commission from adopting rules pursuant to that section that: (1) Require Commission approval of any contract, rule, regulation, or action of any foreign board of trade, exchange, or market, or clearinghouse for such board of trade, exchange, or market, or (2) govern in any way any rule or contract term or action of any foreign board of trade, exchange, or market, or clearinghouse for such board of trade, exchange, or market.[24]

[20] For purposes of this Statement of Policy, the term ''direct access'' refers to the explicit grant of authority by a foreign board of trade to an identified member or other participant of that board of trade to enter trades directly into the board of trade's trade matching system.

In contrast, the staff no-action letters generally have defined the term ''automated order routing systems'' (AORS) as meaning any system of computers, software or other devices that allows entry of orders through another party (an intermediary) who has been granted direct access for transmission to the trading system where, without substantial human intervention, trade matching or execution takes place.

The Commission does not view the transmission of intermediated orders via AORSs for execution on a foreign board of trade to be ''direct access'' to that board of trade for purposes of the no-action process.

In this regard, the Commission endorses the view that mere intermediated electronic access by AORS does not create a presence in the U.S., such that a firm exempted from registration as a futures commission merchant (FCM) pursuant to Commission Regulation 30.10, which is prohibited from establishing a U.S. presence, would be required to register as an FCM. *See, e.g.*, CFTC Staff Letter No. 05–16 [Current Transfer Binder] Comm. Fut. L. Rep. (CCH) ¶ 30,127 (Aug. 26, 2005) (''For example, Rule 30.10 Firms continue to be prohibited from maintaining a presence in the United States. Thus, Rule 30.10 Firms cannot provide direct access to LIFFE CONNECT® in the United States (although they would be permitted to accept orders overseas from customers located in the United States that submit such orders by telephone or *through an AORS* located in the United States'').) (*Emphasis added.*)

This position is consistent with the Commission's historical policy of addressing customer protection concerns with regard to the offer or sale of foreign futures to U.S. customers primarily through regulation of the intermediary. In this regard, nothing in the Statement of Policy is intended to alter current Commission rules that require that any person engaging in the offer or sale of a foreign futures contract or foreign futures option transaction for or on behalf of a U.S. customer must be a registered futures commission merchant or operating pursuant to a Rule 30.10 Order.

[21] Section 126(a) of the CFMA, Appendix E of Pub. L. No. 106–554, 114 Stat. 2763 (2000), provides:

''SEC. 126. INTERNATIONAL ACTIVITIES OF THE COMMODITY FUTURES TRADING COMMISSION.

(a) FINDINGS.—The Congress finds that—

(1) derivatives markets serving United States industry are increasingly global in scope;

(2) developments in data processing and communications technologies enable users of risk management services to analyze and compare those services on a worldwide basis;

(3) financial services regulatory policy must be flexible to account for rapidly changing derivatives industry business practices;

(4) regulatory impediments to the operation of global business interests can compromise the competitiveness of United States businesses;

(5) events that disrupt financial markets and economies are often global in scope, require rapid regulatory response, and coordinated regulatory effort across international jurisdictions;

(6) through its membership in the International Organization of Securities Commissions, the Commodity Futures Trading Commission has promoted beneficial communication among market regulators and international regulatory cooperation; and

(7) the Commodity Futures Trading Commission and other United States financial regulators and self-regulatory organizations should continue to foster productive and cooperative working relationships with their counterparts in foreign jurisdictions.''

[22] Section 4(a) of the CEA provides in part:

''Unless exempted by the Commission pursuant to subsection (c) of this section, it shall be unlawful for any person to offer to enter into, to enter into, to execute, to confirm the execution of, or to conduct any office or business anywhere in the United States, its territories or possessions, for the purpose of soliciting or accepting any order for, or otherwise dealing in, any transaction in, or in connection with, a contract for the purchase or sale of a commodity for future delivery *(other than a contract which is made on or subject to the rules of a board of trade, exchange, or market located outside the United States, its territories or possessions) (emphasis added)*''

unless—

''(1) such transaction is conducted on or subject to the rules of a board of trade which has been designated or registered by the Commission as a contract market or derivatives transaction execution facility * * *.''

7 U.S.C. 6(b) (2000).

[23] In the absence of no-action relief, a board of trade, exchange or market that permits direct access by U.S. persons might be subject to Commission action for violation of, among other provisions, section 4(a) of the CEA, if it were not found to qualify for the exclusion from the DCM designation or DTEF registration requirement.

[24] Section 4(b) of the CEA provides:

''The Commission may adopt rules and regulations proscribing fraud and requiring minimum financial standards, the disclosure of risk, the filing of reports, the keeping of books and records, the safeguarding of customers' funds, and registration with the Commission by any person located in the United States, its territories or possessions, who engages in the offer or sale of any contract of sale of a commodity for future delivery that is made or to be made on or subject to the rules of a board of trade, exchange, or market located outside the United States, its territories or possessions. Such rules and regulations may impose different requirements for such persons depending upon the particular foreign board of trade, exchange, or market involved. No rule or regulation may be adopted by the Commission under this subsection that (1) requires Commission approval of any contract, rule, regulation, or action of any foreign board of trade, exchange, or market, or clearinghouse for such board of trade, exchange, or market, or (2) governs in any way any rule or contract term or action of any foreign board of trade, exchange, or market, or clearinghouse for such board of trade, exchange, or market.''

Continued

B. Section 4(a)'s Exclusion From Contract Market Designation Applies Only With Respect to ''Bona Fide'' Boards of Trade

The Commission interprets the section 4(a) parenthetical exclusion from contract market designation for foreign boards of trade to apply only with respect to ''bona fide'' boards of trade. The term ''bona fide'' in this context refers to boards of trade that, among other things, possess the attributes of established, organized exchanges, adhere to appropriate rules prohibiting abusive trading practices, have been authorized by a regulatory process that examines customer and market protections and are subject to continued oversight by a regulator that has power to intervene in the market and share information with the Commission. In reaching this conclusion, the Commission relies on legislative history found in the *Report of the Senate Committee on Agriculture, Nutrition, and Forestry,*[25] which discusses the addition of section 4(b) to the CEA. Specifically, the Report notes that:

> In addition, the rules and regulations developed under this provision [section 4(b)] are not intended to place the solicitation or acceptance of orders in the United States for bona fide foreign futures contracts at a comparative disadvantage with similar solicitation or acceptance of orders for domestic futures contracts. For example, rules which require the segregation of all or part of customers' funds in the United States would not be consistent with the intent of this provision when there is adequate evidence that such funds have been transferred to a *bona fide market, clearinghouse, or market principal* and are adequately safeguarded for the protection of U.S. residents. [*emphasis* added]

The Commission's conclusion in this regard is harmonious with previous Commission interpretations of ''bona fide'' exchange.[26]

A commenter had questioned the appropriateness of applying a ''bona fide'' limitation on the application of section 4(a).[27] However, in light of the legislative history quoted above, which the Commission previously has interpreted as limiting the exclusion from Section 4(a) to *bona fide* foreign boards of trade, we believe that the interpretation we adopt today is an appropriate and reasonable exercise of the Commission's powers to interpret and apply its governing statute, particularly when it implicates domestic conduct and possible effects on domestic persons and markets that the Commission is charged with protecting.

II. The Appropriateness of the No-Action Process

A. The Commission Endorses the No-Action Process

The Commission endorses the continued use of the no-action process as an appropriate and flexible mechanism that should be used prospectively to facilitate direct access to the electronic trading system of a foreign board of trade by its U.S. members or authorized participants.[28]

The no-action process is appropriate because it gives staff the flexibility to address the factual circumstances presented in the future, and to apply a consistent approach to reviewing applications for no-action relief in light of innovations in electronic trading and technology, evolving regulatory standards, and specific customer protection and market integrity concerns. This approach is consistent with the CFMA's goal of adopting a flexible regulatory policy that can account for rapidly changing derivatives industry business practices, a theme that also was voiced at the Commission's hearing and in the written comments. Among other things, Congress found in the CFMA that ''financial services regulatory policy must be flexible to account for rapidly changing derivatives industry business practices.'' CFMA Section 126(a)(3). Moreover, Section 126(b) of the CFMA expresses the sense of Congress that the Commission coordinate with foreign regulatory authorities to encourage ''the facilitation of cross-border transactions through the removal or lessening of any unnecessary legal or practical obstacles.''

B. The Commission Endorses the Scope of Review of the No-Action Process

The scope of review that was established by Commission staff in the DTB no-action letter and refined in subsequent no-action letters[29] focuses on establishing the ''bona fide'' status of the foreign board of trade and finding that no public interest would be adversely affected by persons in the U.S. directly accessing the foreign board of trade.[30]

In general, staff reviews information and representations provided by the applicant that relate to, among other things, the rules and structure of the applicant exchange (with an emphasis on the exchange's financial integrity, market surveillance, trade practice and rule enforcement regime), various system integrity protections that govern the foreign board of trade's electronic trading system (using as a template the *1990 Principles for the Oversight of Screen-Based Trading Systems*),[31] the system's related clearing and customer default protections, and information concerning the regulatory structure in the applicant's jurisdiction, with a specific emphasis on market regulation.[32] The staff also reviews the

7 U.S.C. 6(b) (2000).

[25] S. Rep. 97–384, 97th Cong. 2d Sess. 46 (1982).

[26] *See* 63 FR 39779, 39788 (July 24, 1998). *See also* Compl. Count I, *CFTC* v. *Topworth Int'l, Ltd.*, (No. 94–1256) (C.D. Cal.) (Feb. 2, 1994).

[27] CL 9 (Chicago Mercantile Exchange) at 5.

[28] We believe the no-action process to be an appropriate exercise of discretion committed to Commission staff, subject to appropriate Commission oversight. *See Board of Trade of the City of Chicago* v. *SEC*, 883 F.2d 525, 530 (7th Cir. 1989); 17 CFR 140.99. In this connection, the Commission is directing staff to continue to circulate through the Secretariat for the Commission's review on an ''absent objection'' basis, prior to issuance, all staff foreign board of trade no-action letters.

[29] Letter dated February 29, 1996 from Andrea Corcoran, Director, Division of Trading and Markets, to Lawrence Hunt, Jr., pp. 12–13 (the DTB no-action letter). CFTC Letter 96–28, indexed at *http://www.cftc.gov/opa/summaries/opanal96.htm*; [1994–1995 Transfer Binder] Comm. Fut. L. Rep. (CCH) ¶ 26,669 at 43,795–43,802 (February 29, 1996).

[30] In the 1996 DTB no-action letter staff concluded that the ''*the mere presence of terminals in the United States would not cause the Commission to deem any bona fide foreign exchange for which products are listed through that system to be a domestic exchange, that is, a board of trade designated as a contract market by the Commission pursuant to section 5 of the Act.*'' (*emphasis added*)

In order to conclude that the DTB was a ''bona fide'' foreign board of trade, and therefore appropriately subject to the parenthetical exclusion for foreign boards of trade in section 4(a) of the CEA, staff generally examined the DTB's rules and the overall regulatory environment. The text of the DTB letter makes clear that staff recognized the prohibitions set out in section 4(b) of the CEA, but noted that ''the relationship or interface between DTB's computer terminals and persons located in the United States may raise regulatory concerns that are unrelated to the internal operations of the DTB or its computer terminals in the United States.'' Accordingly, the review set forth in the DTB letter also focused narrowly on the domestic implications for U.S. persons using the DTB direct access terminals (*i.e.*, the system integrity and clearing review).

[31] *The 1990 IOSCO Principles for the Oversight of Screen-Based Trading Systems* (*Screen-Based Principles*) were developed by IOSCO Working Party 7 on futures, which was chaired by the CFTC. The IOSCO Screen-Based Principles set out in broad terms the international consensus as to the regulatory considerations to be addressed in reviewing mechanisms for screen-based trading. The Commission adopted the *IOSCO Screen-Based Principles* as a statement of Commission policy. *See* 55 FR 48670 (November 21, 1990). In adopting the *IOSCO Screen-Based Principles*, the Commission made clear that they establish general policy goals that will guide the Commission in resolving issues arising from screen-based trading systems, but would not mandate a particular substantive response.

[32] The Commission previously summarized the scope of the staff's foreign board of trade (FBOT) inquiry as follows:

''Currently, Commission staff generally examines the following when reviewing an FBOT's request

adequacy of information sharing with the Commission by the market and its regulator. Based upon its review of the documents and representations submitted by the applicant, and subject to compliance with various conditions (*e.g.*, representations governing access to books and records and the appointment of a U.S. agent for service of process), staff might conclude that granting no-action relief would not be contrary to the public interest.

Essentially, as it has evolved, the staff review seeks to determine that the applicant foreign board of trade is subject to governmental authorization, appropriate rules prohibiting abusive trading practices, and continuing oversight by a regulator that has powers to intervene in the market and share information with the Commission. This review generally reflects the internationally accepted approaches used by many developed market jurisdictions to govern access to foreign electronic exchanges. These approaches generally are based upon a review of, and ongoing reliance upon, the foreign market's ''home'' regulatory regime, and are designed to maintain regulatory protections while avoiding the imposition of duplicative regulation.[33]

The Commission finds that the staff review appropriately addresses the Commission's concern that relief will only be granted with respect to *bona fide* foreign boards of trade.[34] The Commission also finds that the staff's review of foreign board of trade representations and the related information submitted with respect to system integrity, clearing procedures and default protections is appropriately focused and respects the prohibitions of section 4(b). Finally, the various terms and conditions that have been imposed in the no-action letters have been reasonably and appropriately tailored to the factual circumstances raised by the applications for no-action relief.

Accordingly, the Commission endorses the general scope of review that was established in the DTB no-action letter, and as it has evolved in subsequent staff letters. The Commission also reconfirms its prior endorsement of the use of the *IOSCO Screen-Based Trading Principles* as a general template to guide its inquiry into the foreign board of trade's electronic trading system. The Commission notes that in 2000 IOSCO reaffirmed the continuing appropriateness of the *Screen-Based Trading Principles*, concluding that they retained their relevancy despite the evolution and increasing sophistication of electronic systems ten years after their adoption, and that they constitute an internationally accepted framework for the oversight of screen-based derivatives trading systems.[35]

In this connection, staff's discretionary, selective reference to broad regulatory objectives, such as those contained in the CEA's *Core Principles* and in internationally-accepted standards,[36] deemed by staff in its discretion to be reflective of a *bona fide* regulatory regime,[37] is an appropriate, non-prescriptive means to structure its review for the purposes of determining the *bona fide* status of a foreign board of trade. This observation is not intended to suggest that the review should require substituted compliance with CEA market designation or registration requirements, apply any prescriptive approach,[38] or otherwise be expanded into a quasi-designation process.[39]

C. The Commission Intends To Preserve the Flexibility and Adaptability of the No-Action Process

The Commission's endorsement of the no-action process's overall approach and scope of review is not intended to limit the staff's ability to adapt or modify its review as it deems necessary to determine the *bona fide* status of a foreign board of trade, or to address any particular U.S. customer protection or market integrity concerns, as identified in Section 3(b) of the CEA, that might be raised by a request for no-action relief. The Commission understands that staff potentially may need to adapt its analysis, as well as the scope and depth of its inquiry, to address changing factual circumstances and any specific regulatory concerns.[40]

---

for terminal placement no-action relief: General information about the FBOT, as well as detailed information about: (i) membership criteria (including financial requirements); (ii) various aspects of the automated trading system (including the order-matching system, the audit trail, response time, reliability, security, and, of particular importance, adherence to the IOSCO principles for screen-based trading); (iii) settlement and clearing (including financial requirements and default procedures); (iv) the regulatory regime governing the FBOT in its home jurisdiction; (v) the FBOT's status in its home jurisdiction and its rules and enforcement thereof (including market surveillance and trade practice surveillance); and (vi) extant information-sharing agreements among the Commission, the FBOT, and the FBOT's regulatory authority. When issued, the terminal placement no-action letters conclude with a standard set of terms and conditions for the granting of the relief which include, among other things, a quarterly volume reporting requirement.''

See 71 FR 34070, 34071 (June 13, 2006).

[33] *See, e.g.*, United Kingdom Financial Services Authority, Financial Services Handbook, Recognised Overseas Investment Exchanges (ROIE) and Recognised Overseas Clearing Houses (ROCH), Section 6. (In comparison with full authorisation as a domestic exchange, ROIE status ''reduces the involvement which UK authorities need to have in the day-to-day affairs of an overseas recognised body because they are able to rely substantially on the supervisory and regulatory arrangements in the country where the applicant's head office is situated.'' *See* FSA Handbook, REC 6.1.2 *http://fsahandbook.info/FSA/html/handbook/REC/6/1.*); Australian Securities and Investments Commission (ASIC) Policy Statement 177.8 describing alternative licensing for overseas markets (''the alternative licensing route in s795B(2) for overseas markets is intended to facilitate competition and avoid regulatory duplication while maintaining investor protection and market integrity.''); Ontario Securities Commission Staff Notice 21–702: Regulatory Approach for Foreign-Based Stock Exchanges (exemption from recognition under section 147 of the Securities Act (Ontario); Autorite des marches financiers (Quebec): Policy Statement Respecting the Authorization of Foreign-Based Exchanges; the German Bundesanstalt für Finanzdienstleistungsaufsicht (BAFIN) authorizes the placement of terminals in Germany under Sections 37i et seq. of the German Securities Trading Act.

[34] *See* Section I *supra*.

[35] *Principles for the Oversight of Screen-Based Trading Systems for Derivative Products—Review and Addition*, IOSCO Technical Committee (2000) at p. 5, section III, Part 1. *http://www.iosco.org/library/index.cfm?section=pubdocs&year=2000*. In this ''Review and Addition,'' IOSCO adopted four additional principles that encouraged regulatory authorities to develop cooperative arrangements to address risks that arise from cross-border derivatives markets, to share relevant information in an efficient and timely manner, to maintain a transparent framework for regulatory cooperation, and to take into account a jurisdiction's application of the *IOSCO Objectives and Principles of Securities Regulation*.

[36] *See, e.g., Objectives and Principles of Securities Regulation, International Organization of Securities Commissions (IOSCO);* and the *Tokyo Communiqué on Supervision of Commodity Futures Markets* (1997), *Annex B: Guidance on Components of Market Surveillance and Information Sharing.* Annex B of the *Tokyo Communiqué* establishes a non-prescriptive framework for undertaking market surveillance, the types of information to which market authorities should have access and collect, the appropriate analysis of information, the type of powers and capacity to investigate market abuse, the appropriate powers to intervene in the market to address abusive practices or disorderly conditions, the need for powers to impose disciplinary sanctions against members of the market as well as non-members, and the components of effective information sharing.

[37] *See, e.g.*, CEA Core Principle 4, section 5(b) of the CEA, for designated contract markets, which requires the monitoring of trading to prevent manipulation, price distortion, and disruption of the delivery or cash settlement process. Principle 28 of the *IOSCO Objectives and Principles of Securities Regulation* states that ''regulation should be designed to detect and deter manipulation and other unfair trading practices.''

[38] In adopting the *1990 IOSCO Screen-Based Principles*, the Commission made clear that ''they establish general policy goals that will guide the Commission in resolving issues arising from screen-based trading systems, but do not mandate a particular substantive response.'' 55 FR 48671, 48672 (November 21, 1990).

[39] *See generally*, footnote 30.

[40] *See, e.g.*, CL 25 (Chicago Board of Trade) at 1: ''We do believe that the analysis preceding the issuance of no-action letters must constantly be re-evaluated and updated to reflect changes and developments in today's dynamic marketplace.''

Similarly, there should be broad discretion under the no-action process to determine, based on the totality of factors, that the foreign exchange and the applicable regulatory regime meet relevant regulatory objectives, notwithstanding that a particular aspect of the foreign jurisdiction's approach is not identical to that of the Commission's regulatory program.[41] In this regard, the Commission recognizes that in an international context, common regulatory objectives can be attained through different regulatory means.[42] The mere fact that a foreign jurisdiction has determined to achieve a regulatory objective in a manner that is different than the Commission's approach often is the result of varied business histories, experiences and legislative choices. The determinative factor in the review should be an affirmative conclusion that the regulatory structure in question addresses the particular regulatory objective deemed to be most relevant.[43]

III. Whether Objective Threshold Standards Should Be Developed That Would Indicate That a Board of Trade Is No Longer Located Outside the United States for Purposes of Section 4(A) of the CEA Such That the Commission Should Require DCM Designation or DTEF Registration

In its release issued in advance of the June 2006 public hearing, the Commission requested comment on, among other things, what level of presence by a foreign board of trade would be a reasonable threshold for determining whether to require DCM/DTEF registration and in particular whether volume should be a determinative factor.[44] The Commission also requested comment on whether it would be appropriate for the Commission to exercise jurisdiction over foreign boards of trade that permit direct access when they list contracts with underlying products that are integral to the U.S. economy.[45]

A. The Commission Is Not Developing Objective Standards Establishing a Threshold Test of U.S. Location

As noted above in the summary of comments and hearing discussions, most commenters rejected any wholesale, mechanistic adoption of threshold indicators of U.S. location. A theme voiced by many commenters was that the Commission should not attempt to formalize any objective ''bright line'' test of U.S. location, particularly during a period of rapid changes in the technology of direct access and market communication, as well as in global business structures and relationships.[46] Among the reasons noted by U.S. industry commenters in particular for not adopting objective standards establishing a threshold test of U.S. location at this time were: the difficulty of developing threshold criteria that would not be viewed as arbitrary,[47] the difficulty of determining primary location in a period of rapid structural change in the futures industry,[48] the possible inhibition of structural and technological innovation,[49] and the danger that an overly-inclusive criterion could result in duplicative regulation[50] as well as a protectionist response in other jurisdictions that might inhibit the ability of the U.S. futures industry to compete effectively on a global basis.[51]

For the reasons noted above, the Commission has decided not to adopt any objective standards establishing a threshold test of U.S. location. Commission staff will continue to assess the legitimacy of any particular applicant to seek relief as a ''foreign'' board of trade by considering the totality of factors presented by an applicant. This flexible, case-by-case approach will permit staff, during a period of evolving market structure, to consider the unique combination of factual indicators of U.S. presence that may be presented by an applicant for relief.[52]

B. Volume Is Not a Determinative Indicator of U.S. Location

The relevancy of U.S-originating volume as a means to determine whether a foreign-organized electronic exchange is ''located'' in the United States for purposes of CEA section 4(a) has been a long-standing, unresolved issue since the issuance of the DTB no-action letter.[53]

Notwithstanding the intuitive appeal of using volume as a proxy for U.S. presence, neither the Commission nor the futures industry in its extended consideration of this issue during the Commission's 1998–1999 rulemaking on access to automated boards of trade could reach consensus on the specific manner in which volume could be usefully applied to determine when a foreign board of trade's U.S. presence required contract market designation.[54]

Comments submitted in response to the Commission's recent Request for Comment, as well as statements made at the related public hearing, reiterated the

[41] *Compare* Appendix A, Part 30 Interpretative Statement with Respect to the Commission's Exemptive Authority under § 30.10 of Its Rules, 17 CFR Part 30, Appendix A: ''In this connection, the Commission would have broad discretion to determine that the policies of any program element generally are met, notwithstanding the fact that the offshore program does not contain an element identical to that of the Commission's regulatory program and conversely may assess how particular elements are in fact applied by offshore authorities.''

[42] *See IOSCO Principles and Objectives of Securities Regulation* at 3: ''There is often no single correct approach to a regulatory issue. Legislation and regulatory structures vary between jurisdictions and reflect local market conditions and historical development.''

[43] This can be confirmed through the applicant's submission of representations and relevant statutes, rules and statements of policy, regulatory and self-regulatory oversight reports, confirmations of good standing by the oversight regulator, and informal staff discussions with relevant officials of the exchange and its oversight regulator. The Commission understands the term ''regulatory structure'' broadly to include the regulations and policies of the exchange, its regulator or another self-regulatory organization, as well as relevant laws and regulations.

[44] 71 FR 34073 (June 13, 2006).

[45] *Id.*

[46] *See, e.g.*, CL 3 (comments of Ben Steil, Director of International Economics, Council on Foreign Relations) at 2.

[47] *See* CL 2 (New York Board of Trade) at 2; and CL 28 (Futures Industry Association) at 11.

[48] *See* CL 25 (Chicago Board of Trade) at 9: ''* * * with cross-border joint ventures and mergers between boards of trade both existing and proposed, it is likely to become more and more difficult to determine the primary location of an exchange.''

[49] *See* CL 2 (New York Board of Trade) at 2: ''Similarly, we do not believe that defining ''location'' on the basis of management, ownership arrangements or the location of offices and technology of an exchange is instructive, as they are likely to change over time and certain functions, such as clearing and technology services, lend themselves to outsourcing.'' *See also* CL 9 (Chicago Mercantile Exchange) at 7: ''For example, a U.S. exchange serving EU customers is likely to maintain an EU sales office and sales representatives, an EU technical office or outsourced technical services to install and service networks, routers and terminals, banking connections, delivery facilities and data centers and/or communication hubs. In the near future, if distributed computing makes trade matching more effective, some part of the matching operations may occur in the EU. It is not difficult to imagine the adverse consequences if each of the jurisdictions in which these operations take place were to assert its right to regulate.''

[50] *See* CL 9 (Chicago Mercantile Exchange, Inc.) at 7.

[51] *See* CL 2 (New York Board of Trade) at 2: ''such an approach runs the risk of creating barriers to U.S. exchanges as they attempt to expand business abroad;'' CL 7 (Minneapolis Grain Exchange) at 2; CL 25 (Chicago Board of Trade) at 7; CL 9 (Chicago Mercantile Exchange, Inc.) at 6; CL 28 (Futures Industry Association) at 11; CL 43 (New York Mercantile Exchange) at 8; and NC 4 (Chicago Mercantile Exchange Holdings Inc) at 2.

[52] *See* CL 43 (New York Mercantile Exchange) at 6. ''Accordingly, while the Commission may want to reserve for the future the possibility to revisit this area, we believe by far the best approach at this point in time would be to provide guidance to Commission staff in the continuation of the ongoing staff no-action letter process.''

[53] The Commission had noted in its 1998 Concept Release that '' by conditioning its letter on the DTB providing the Division [staff] with quarterly updates of DTB's U.S.-originating trading volume, the Division intended to leave open the possibility that at some point DTB's activities in the U.S. might rise to a level that would necessitate greater Commission regulation.'' *See* 63 FR 39779, 39781 (July 24, 1998).

[54] *See* 64 FR at 14170.

various problems associated with the use of volume, such as the regulatory uncertainty that would result from using a constantly fluctuating variable such as volume, the arbitrary nature of any fixed percentage, the difficulties in accurately measuring U.S.-based volume, and the possible inhibiting effect on exchanges' global activities.[55] Significantly, all of the U.S. futures exchanges agreed, as did foreign exchanges, that volume was not a stable indicator of U.S. presence for the purpose of requiring DCM designation or DTEF registration.[56]

Accordingly, the Commission agrees that volume is not determinative of U.S. location. This conclusion does not mean, however, that volume statistics should no longer be required from boards of trade operating under a staff no-action letter, as the submission of volume data may serve other regulatory interests. The Commission expects that any data collection requirement would be tailored carefully to provide meaningful information.

C. Nature of the Underlying Contract Is Not Determinative of Designation

Some commenters have suggested that the Commission should require foreign boards of trade that list contracts based on a U.S.-produced or economically important commodity to obtain contract market designation rather than be permitted to operate under a staff no-action letter.[57] In effect, such proposals would make the application of the parenthetical exclusion from designation in CEA section 4(a) for boards of trade located outside the U.S. dependent upon the nature of the commodity underlying a particular futures contract.

However, the nature of the underlying commodity is not probative of the ''location'' of a board of trade for purposes of CEA section 4(a). Such an approach would lead to the anomalous result of a board of trade being characterized as ''foreign'' for some contracts, but considered a ''U.S.-based'' exchange for a single contract and therefore required to seek contract market designation. In addition, several U.S. contract markets list futures contracts on commodities that are produced or delivered in foreign jurisdictions. Were the Commission to endorse using such criteria to require designation, such a policy could be cited by foreign jurisdictions as a rationale to subject U.S. markets to regulation.[58]

IV. Enhancements to the No-Action Process

Notwithstanding its endorsement of the no-action process, the Commission has identified additional enhancements that are intended to ensure the availability of necessary information, and to ensure that staff will carefully consider proposals for trading contracts that potentially could have an adverse effect on the ability of the Commission to carry out its regulatory responsibilities.

A. The Trading of Contracts That May Adversely Affect the Commission's Regulatory Responsibilities Should Be Addressed

Should staff become aware that the trading of products listed on a foreign board of trade that has been granted no-action relief:

- Affects adversely the pricing of contracts traded on any registered entity as defined in Section 1a(29) of the CEA, or of contracts traded on any cash market for commodities subject to the CEA;
- Creates unacceptable systemic risks or disruptions in those markets or the U.S. financial system, including capital markets; or
- Facilitates abusive trading practices on U.S. markets or otherwise interferes with the ability of the Commission to carry out its regulatory responsibilities, in particular market surveillance,

staff may exercise its discretion and consider a full range of responses, such as imposing conditions and requiring enhanced information sharing arrangements and surveillance procedures (see below), or other appropriate action. In this regard, the Commission retains plenary authority to address manipulative or abusive trading practices that affect U.S. futures and cash markets and market users,[59] and will use that authority when necessary and appropriate.

B. Enhanced Information Sharing Procedures Should Be Adopted

In a global market environment, where conduct that takes place on markets located outside the United States may have an impact on U.S. futures and cash markets, as well as the members and users of those markets, the Commission needs to cooperate closely with foreign market authorities in order to ensure that the Commission can carry out its regulatory responsibilities. The Commission therefore endorses the existing practice of requiring information sharing assurances as a condition to issuance of a no-action letter and continued activities pursuant to the granted relief. However, in light of the Commission's experiences in this area, as well as the development of internationally accepted information sharing arrangements and standards, the following enhancements are appropriate.

1. Exchange and Its Regulator Should Have Power, Authority and Willingness To Share Needed Information

In negotiating information sharing arrangements, staff should confirm that the market and its regulator have the power to obtain the specific types of information that may be needed by the Commission, as well as the authority to share that information with the Commission on an ''as needed'' basis. Moreover, staff should obtain evidence of the market's and regulator's willingness to share information (*e.g.*, through explicit undertakings). In this regard, staff should note whether the applicant's regulator has signed the IOSCO Multilateral Memorandum of Understanding (MMOU), which requires as a condition to executing the MMOU a demonstration of power, authority and willingness to share information. If the applicant's regulator is not a signatory of the IOSCO MMOU, staff should ascertain whether any prohibitions to information sharing exist.

2. Applicants for No-Action Relief Should Sign the Exchange International MOU

When exchange member firms and market participants trade on multiple global exchanges, no one regulator or market authority will have all of the information necessary to evaluate the risks to its markets. The Exchange

[55] As noted at the Commission's Hearing, it is inevitable that as exchanges consolidate, they will list contracts that are of great economic interest in other jurisdictions and attract enormous participation from other jurisdictions. *See* Hearing Tr. at 100 (Ben Steil). If significant volume denoted grounds for exchange licensing, then such an exchange potentially would be subject to duplicative and burdensome regulation.

[56] *See* CL 2 (New York Board of Trade) at 2; CL 7 (Minneapolis Grain Exchange) at 1; CL 9 (Chicago Mercantile Exchange) at 6; CL 25 (Chicago Board of Trade) at 9–10; CL 43 (New York Mercantile Exchange) at 7. *See also* CL 21 (Tokyo Financial exchange) at 1; CL 22 (Federation of European Securities Exchanges) at 3; and CL 23 (Eurex Deutschland) at 7–8 for representative foreign exchange comment. Letter available at: *http://www.cftc.gov/dea/deaforeignterminaltable.htm*.

[57] *See* CL 25 (Chicago Board of Trade) at 10–11: The statement of Policy should exclude U.S. Government Securities. *See also* letter dated January 27, 2006 from the NYMEX to Reuben Jeffery III: ''The core regulatory policy question is, of course, whether the WTI crude oil futures contract is a foreign contract or whether it is a U.S. futures contract requiring ICE Futures to become a U.S. designated contract market. * * * NYMEX believes that the new WTI futures contract is a U.S. product * * * drilled and produced in the US.''

[58] *See generally* CL 2 (New York Board of Trade).

[59] *See, e.g.*, CEA Section 9(a)(2), 7 U.S.C. 13(a)(2) and CEA section 8a(5), 7 U.S.C. 12a(5).

International Information Sharing Memorandum of Understanding and Agreement (Exchange International MOU)[60] and the *Declaration on Cooperation and Supervision of International Futures Exchanges and Clearing Organizations (Declaration)*,[61] a companion arrangement for regulators, were developed in 1996 as an international response to address such gaps in information. These arrangements facilitate the identification of large exposures by firms that could have a potentially adverse effect on multiple markets.

Applicants for staff no-action relief should execute, or commit to execute, the *Exchange International MOU* because it demonstrates a commitment to share information between exchanges that is needed to ensure the integrity of markets and to address systemic risks. In circumstances where a foreign board of trade is unable to share information directly with another exchange, its regulator should sign the *Declaration* (or commit to share such information pursuant to an existing MOU or other arrangement with the Commission).

3. Arrangements To Obtain and Share Information Required To Carry Out the Commission's Domestic Market Surveillance Responsibilities Should Be a Condition to No-Action Relief

When an applicant for, or recipient of, no-action relief trades or will trade contracts that staff in its discretion determines may affect the Commission's ability to carry out its surveillance responsibilities (*e.g.*, an economically linked contract), the foreign board of trade should be required to provide directly to the Commission and in a timely manner, appropriate trade and position data as deemed necessary by Commission staff. Alternative arrangements may be acceptable where local law or regulatory policies require the interposition of the market regulator, provided that such arrangements supply the Commission on a timely basis with the market information that the Commission's staff determines is necessary to carry out the Commission's market surveillance responsibilities.

C. The Continuing Good Standing of the Foreign Board of Trade Should Be Verified

Although the no-action letters require that the foreign board of trade submit to staff and keep updated on a quarterly basis certain material information, staff should develop a non-burdensome and efficient means to confirm the board of trade's continued ''good standing'' in its authorizing jurisdiction. This could take the form of an annual or biannual confirmation by the relevant oversight regulator of the foreign board of trade's authorized status and the continuing validity of any relevant representations that had been made by the foreign board of trade in its initial application.

V. The No-Action Process Is Not the Appropriate Means To Address Competitive Issues

In their comments, U.S. futures exchanges essentially encouraged the Commission to review its regulations to consider the competitive impact of differences between its regulations and those of other jurisdictions.[62] Some exchanges suggested that the Commission should address perceived regulatory disparities in connection with the no-action process,[63] particularly where the exchanges trade similar products.[64]

The Commission does not believe that it should address competitive concerns within the context of any individual request for a staff no-action letter. Claims of competitive advantage or disadvantage are exceedingly difficult to prove. An exchange's competitive status reflects an array of contributing factors, such as its overall rule structure, its governance and business policy determinations, its fee structure, type of contracts offered, the method of trading, the efficiency of its technology and clearing systems, as well as external factors such as statutory restrictions, tax structure and the overall legal system.[65] Rather, the appropriate focus of the no-action review should be on addressing the *bona fide* status of, and domestic regulatory concerns raised by, an applicant for a no-action letter.

The CFMA has materially improved the competitive status of the U.S. futures industry.[66] Nonetheless, the Commission takes seriously the CFMA findings, among others, that ''financial services regulatory policy must be flexible to account for rapidly changing derivatives industry business practices,'' and ''regulatory impediments to the operation of global business interests can compromise the competitiveness of United States businesses.''[67] The Commission will continue to address these policy goals through ongoing review of its regulatory program.

Conclusion

The U.S. futures industry is undergoing a period of dynamic change, marked by technological innovation, consolidation, evolving business relationships, and increasing global competition. The Commission does not presume to be able to predict the course of ongoing industry evolution in these areas.

The Commission's appropriate role during such a period of rapid change is to construct policies that will foster achievement of the Act's section 3 objectives of ensuring market and financial integrity, addressing systemic risks, and protecting market participants, but to do so in a flexible manner that avoids inadvertently inhibiting technological innovation or the ability of the U.S. futures industry

[60] The development of the *Exchange International MOU* was one of the achievements that resulted from the FIA sponsored Global Task Force on Financial Integrity, which was convened to address the cross-border issues that were identified in connection with the failure of Barings Plc. To date, fifty-six global derivatives exchanges have signed the MOU.

[61] The *Declaration* was developed through discussions at the CFTC's international regulators conference, and was motivated by work recommendations issued from the Windsor Conference and Tokyo Conference, which were convened by the CFTC, the U.K. FSA and Japanese regulators (Ministry of International Trade and Industry (MITI) and the Ministry of Agriculture, Forestry and Fisheries (MAFF)) to respond to the cross-border issues raised by the failure of Barings Plc. The *Declaration* was developed to address instances in which an exchange would not be able to share information directly with another exchange under the *Exchange International MOU*. Twenty-eight regulators have signed the *Declaration*. Copy available at: *http://www.cftc.gov/oia/oiabocadec0398.htm*.

[62] *See, e.g.*, (Chicago Mercantile Holdings, Inc.) Request to Appear at the Public Hearing at 2; CL 7 (Minneapolis Grain Exchange) at 1; CL 43 (New York Mercantile Exchange) at 2, 10–12.

[63] *See* CL 25 (Chicago Board of Trade) at 1.

[64] *See* Hearing Tr. (NYMEX Chairman James Newsome) at 72, 82.

[65] In a 1999 report, the Commission's Division of Economic Analysis attributed changes in market activity since the 1980s to the continued market maturation process, nonregulatory cost considerations and technological change rather than international regulatory differences.

''In sum, neither trends in the locus of trading activity nor regulatory developments over the last five years suggest an erosion of U.S. futures markets' global competitive position. However, to the extent that the movements toward electronic trading systems and exchange consolidation that were observed over the period of this study continue into the future, the competitive structure of global futures markets is likely to change significantly. The Commission is committed to continued regulatory flexibility in the face of these trends. However, it is likely that the potential cost savings generated by these trends, and not the nature of the differences among the regulatory systems of various nations, will be most important in shaping the composition and trading interest of the global futures industry in the twenty first century.''

The Global Competitiveness of U.S. Futures Markets Revisited, the Commission's Division of Economic Analysis (November 1999), *http://www.cftc.gov/dea/compete/deaglobal_competitiveness.htm.*

[66] *See, e.g.* CL 9 (Chicago Mercantile Exchange): ''CFMA greatly improved the competitive environment in the U.S. and eliminated many of the legitimate concerns of U.S. based futures exchanges.''

[67] CFMA Sections 126(a)(3), 126(a)(4).

to compete effectively in a global environment.

This Statement of Policy has been developed as a means for the Commission to respond flexibly to the challenges posed by the ongoing evolution in electronic access to global markets. The Commission will continue to monitor carefully, and review the Policy Statement as necessary in light of, the ongoing evolution of cross-border electronic direct access and intermediation in order to ensure that it does not adversely affect U.S. cash and futures markets, market participants and customers, as well as the consumers affected by those foreign market transactions.

Issued in Washington, DC, on October 27, 2006 by the Commission.

Eileen A. Donovan,

Acting Secretary of the Commission.

[FR Doc. E6–18513 Filed 11–1–06; 8:45 am]

BILLING CODE 6351–01–P

DEPARTMENT OF HEALTH AND HUMAN SERVICES

Food and Drug Administration

21 CFR Part 522

Implantation or Injectable Dosage Form New Animal Drugs; Glycopyrrolate

AGENCY: Food and Drug Administration, HHS.

ACTION: Final rule.

SUMMARY: The Food and Drug Administration (FDA) is amending the animal drug regulations to reflect approval of an abbreviated new animal drug application (ANADA) filed by IVX Animal Health, Inc. The ANADA provides for veterinary prescription use of glycopyrrolate solution as an injectable preanesthetic agent in dogs and cats.

DATES: This rule is effective November 2, 2006.

FOR FURTHER INFORMATION CONTACT: John K. Harshman, Center for Veterinary Medicine (HFV 104), Food and Drug Administration, 7500 Standish Pl., Rockville, MD 20855, 301–827–0169, e-mail: *john.harshman@fda.hhs.gov*.

SUPPLEMENTARY INFORMATION: IVX Animal Health, Inc., 3915 South 48th Street Ter., St. Joseph, MO 64503, filed ANADA 200–365 that provides for veterinary prescription use of Glycopyrrolate Injectable as a preanesthetic agent in dogs and cats. IVX Animal Health, Inc.'s Glycopyrrolate Injectable is approved as a generic copy of Fort Dodge Animal Health's, Division of Wyeth's ROBINUL-V (glycopyrrolate), approved under NADA 101–777. The ANADA is approved as of October 2, 2006, and the regulations are amended in 21 CFR 522.1066 to reflect the approval and a current format. The basis of approval is discussed in the freedom of information summary.

In accordance with the freedom of information provisions of 21 CFR part 20 and 21 CFR 514.11(e)(2)(ii), a summary of safety and effectiveness data and information submitted to support approval of this application may be seen in the Division of Dockets Management (HFA–305), Food and Drug Administration, 5630 Fishers Lane, rm. 1061, Rockville, MD 20852, between 9 a.m. and 4 p.m., Monday through Friday.

FDA has determined under 21 CFR 25.33(a)(1) that this action is of a type that does not individually or cumulatively have a significant effect on the human environment. Therefore, neither an environmental assessment nor an environmental impact statement is required.

This rule does not meet the definition of ''rule'' in 5 U.S.C. 804(3)(A) because it is a rule of ''particular applicability.'' Therefore, it is not subject to the congressional review requirements in 5 U.S.C. 801–808.

List of Subjects in 21 CFR Part 522

Animal drugs.

■ Therefore, under the Federal Food, Drug, and Cosmetic Act and under authority delegated to the Commissioner of Food and Drugs and redelegated to the Center for Veterinary Medicine, 21 CFR part 522 is amended as follows:

PART 522—IMPLANTATION OR INJECTABLE DOSAGE FORM NEW ANIMAL DRUGS

■ 1. The authority citation for 21 CFR part 522 continues to read as follows:

Authority: 21 U.S.C. 360b.

■ 2. Revise § 522.1066 to read as follows:

§ 522.1066 Glycopyrrolate.

(a) *Specifications*. Each milliliter of solution contains 0.2 milligram glycopyrrolate.

(b) *Sponsors*. See Nos. 000856 and 059130 in § 510.600(c) of this chapter.

(c) *Conditions of use in dogs and cats*—(1) *Amount*. 5 micrograms per pound of body weight (0.25 milliliter per 10 pounds of body weight) by intravenous, intramuscular, or subcutaneous injection in dogs or by intramuscular injection in cats.

(2) *Indications for use*. As a preanesthetic agent.

(3) *Limitations*. Federal law restricts this drug to use by or on the order of a licensed veterinarian.

Dated: October 23, 2006.

Stephen F. Sundlof,

Director, Center for Veterinary Medicine.

[FR Doc. E6–18444 Filed 11–1–06; 8:45 am]

BILLING CODE 4160–01–S

DEPARTMENT OF STATE

22 CFR Part 97

[Public Notice 5602]

RIN 1400–AC19

Intercountry Adoption—Department Issuance of Certifications in Hague Convention Adoption Cases

AGENCY: Department of State.

ACTION: Final rule.

SUMMARY: The Department of State (the Department) is issuing a final rule to implement the certification and declaration provisions of the 1993 Hague Convention on Protection of Children and Co-operation in Respect of Intercountry Adoption (the Convention) and the Intercountry Adoption Act of 2000 (the IAA) with respect to adoption and custody proceedings taking place in the United States, after review of public comments received in response to the Department's June 16, 2006 issuance of a proposed rule. This final rule governs the application process for Hague Adoption Certificates and Hague Custody Declarations in cases involving emigration of a child from the United States. It also establishes a process for seeking certification, for purposes of Article 23 of the Convention, that an adoption done in the United States following a grant of custody in a Convention country of origin was done in accordance with the Convention.

DATES: This rule is effective December 4, 2006. Information about the date the Convention will enter into force is provided in 22 CFR 96.17.

FOR FURTHER INFORMATION CONTACT: For further information, contact Anna Mary Coburn at 202–736–9081. Hearing- or speech-impaired persons may use the Telecommunications Devices for the Deaf (TDD) by contacting the Federal Information Relay Service at 1–800–877–8339.

SUPPLEMENTARY INFORMATION:

I. Background

The Convention is a multilateral treaty that provides a framework for the

adoption of children habitually resident in one country party to the Convention by persons habitually resident in another country party to the Convention. It was developed under the auspices of the intergovernmental organization known as the Hague Conference on Private International Law (the Hague Conference).

The United States signed the Convention on March 31, 1994, and the President subsequently transmitted the Convention to the Senate for its advice and consent. On September 20, 2000, the Senate gave its advice and consent to the ratification of the Convention and, at about the same time, Congress enacted the implementing legislation for the Convention—the Intercountry Adoption Act (the IAA), Public Law 106–279, 42 U.S.C. 14901–14952. Consistent with U.S policy on ratification of treaties and the Senate's advice and consent to ratification, the United States will not ratify the Convention until the United States is able to carry out its obligations under the Convention. (See Senate Declaration for Convention Article 22(2) (146 Cong. Rec. S8866 (daily ed. Sept. 20, 2000). Although this final rule is effective in 30 days, parties are not required to comply with the provisions of 22 CFR part 97 until the Convention enters into force for the United States (three months after the United States ratifies it).

This final rule establishes procedures for issuing certifications in Convention adoptions involving the emigration of a child from the United States (outgoing cases) and for seeking certifications regarding adoptions in incoming cases. In response to its issuance of the proposed rule, the Department received insightful public comments that are posted on the Department's Web site at *http://www.travel.state.gov.* The Department is issuing the rule as final with minor changes, taking into account the comments received.

Section 303(c) of the IAA gives the Department responsibility for issuing an official certification that a child resident in the United States has been adopted, or a declaration that custody for the purpose of adoption has been granted, in accordance with the Convention and the IAA. The IAA assigns to State courts with jurisdiction over matters of adoption, or custody for purposes of adoption, the responsibility for receiving and verifying documents required under the Convention, making certain determinations required of the country of origin by the Convention, and determining that the placement is in the best interests of the child. With certain limited exceptions, the Convention requires all Convention parties to recognize adoptions, if the adoption is certified by the country of adoption as having been made in accordance with the Convention. This final rule also establishes a separate, discretionary, procedure pursuant to which the Department may certify that an incoming case finalized in the United States (*i.e.*, a case in which custody was granted abroad but the adoption was done by a U.S. court) was done in accordance with the Convention. The Department may issue this certification if an issue arises concerning recognition of the adoption pursuant to Article 23 of the Convention.

Further background on the Convention and the IAA is provided in the Preamble to the Proposed Rule on Issuance of Hague Convention Certificates and Declarations in Convention Adoption Cases, Section I, 71 FR 34857–34858 (June 16, 2006); the Preamble to the Final Rule on the Accreditation and Approval of Agencies and Persons under the IAA, Section I and II, 71 FR 8064–8066 (February 15, 2006); and the Preamble to the Proposed Rule on the Accreditation of Agencies and Approval of Persons under the Intercountry Adoption Act of 2000, Sections III and IV, 68 FR 54065–54073 (September 15, 2003).

II. Section-by-Section Discussion of Comments

This section provides a detailed discussion of comments received on the proposed rule and describes changes made to the proposed rule. Three general points should be kept in mind in reading this discussion. First, we refer generally to actions of the ''Department'' pursuant to the rule. The rule itself refers to actions of the ''Secretary,'' as the official named in the IAA, but the day-to-day exercise of the Secretary's functions has been delegated (Delegation of Authority 261, 68 FR 56372, September 30, 2003) to the Assistant Secretary for Consular Affairs. Second, this rule directly imposes Federal requirements on State courts to the extent consistent with the IAA. Specifically, the IAA assigns to State courts with jurisdiction over matters of adoption, or custody for purpose of adoption, the responsibility for receiving and verifying documents required under the Convention, making certain determinations required of the country of origin by the Convention, and determining that the placement is in the best interests of the child. In keeping with current U. S. domestic law and philosophy of treaty application in the context of a federalist system, we have imposed the Convention requirements on outgoing cases, which are governed mainly by State law, when the IAA has expressly imposed such Convention requirements. Finally, the Department has changed the title of the proposed rule to clarify that the rule covers both incoming and outgoing case certifications. The title change is not indicative of any substantive changes to the final rule.

Section 97.1 Definitions

No comments on the definitions were received, and no changes to 97.1 have been made. One commenter did recommend that throughout the rule the term ''adoptable'' child be removed because, according to the commenter, the term has historically implied that children are a marketable commodity. Although the Convention itself uses the term ''adoptable'' despite similar objections at the time of drafting, we have changed the word ''adoptable'' to ''eligible for adoption'' whenever possible.

Section 97.2 Application for a Hague Adoption Certificate (HAC) or a Hague Custody Declaration (HCD) (Outgoing Case)

1. *Comment:* Some commenters are concerned about how long the process to obtain a HAC or a HCD will take and that any delays could negatively affect a child waiting for an adoptive placement. One commenter recommends that specific timeframes be added to the rule, such as requiring the Department to issue a HAC or HCD in three business days, to ensure that families who had traveled to adopt a child living the United States did not have to wait too long for a HAC or HCD once the relevant State court issued the final adoption decree or custody decree.

Response: We agree that the HAC or HCD should be swiftly issued. The Department, however, is not including a specific timeframe in the rule. Our goal nonetheless is to issue a HAC or HCD as soon as possible, provided the supporting documentation required under § 96.3 has been submitted.

2. *Comment:* One commenter urges the Department to accept all materials, including applications and supporting documents by fax or e-mail, and to encourage other Central Authorities (CAs) to do the same. The commenter also asks that the Department encourage the CAs of receiving countries to provide any necessary approvals within 24 hours of request, noting that the Netherlands issues approvals within 24 hours.

Response: The Department intends to accept applications and supporting materials via fax and e-mail to the extent practicable. We will encourage

other CAs to accept communications by fax and e-mail as well. We also plan to urge other CAs to act expeditiously to send any necessary approvals to relevant State courts for a Hague outgoing case.

3. *Comment:* One commenter requests that fee payments be permitted by credit card submission via Internet, phone, or fax.

Response: If a fee is charged for issuance of a HAC or HCD, we will make the methods of payment easy and consistent with other federal agency requirements covering payment of fees.

4. *Comment:* One commenter asks which part of the Department will be responsible for issuing HACs and HCDs and where its office will be located.

Response: The Office of Children's Issues in the Bureau of Consular Affairs will issue HACs and HCDs out of its central office in Washington, DC.

5. *Comment:* One commenter asks what type of training will be provided to the staff responsible for adjudicating applications for HACs or HCDs and requests information on how this function will be staffed.

Response: The Department plans to train the Office of Children's Issues case officers thoroughly by using Foreign Affairs Manual (FAM) materials and formal classroom training. With respect to staffing, we do not yet know the number of outgoing cases and thus cannot determine how many officers will be assigned this critical CA function.

6. *Comment:* One commenter requests clarification of the parties that may apply for a HAC or HCD and asks specifically whether birthparent(s) may apply for a HAC or HCD. The commenter also asks whether the citizenship of the adoptive parent(s) or prospective adoptive parent(s) will affect their ability to obtain a HAC or a HCD.

Response: The adoptive parent(s) or prospective adoptive parent(s), who will be habitual residents of the receiving country and typically will not be U.S. citizens, will most likely be the parties to apply for a HAC or a HCD. Despite being non-U.S. citizen adoptive parent(s) or prospective adoptive parent(s), they will be able to apply for and obtain a HAC or HCD. The rule states that ''any party'' to an adoption or custody proceeding may apply for a HAC or HCD; thus, if a birthparent was a party to the adoption or custody proceeding, he or she may apply for a HAC or HCD. Likewise, the adopted child may apply for a HAC or HCD. If various parties to the adoption or custody proceeding apply for HACs or HCDs, more than one copy of the HAC or HCD may be issued. The Department's goal is to provide a HAC or HCD to any party to the adoption or custody proceeding who may need it to obtain recognition and acceptance of the adoption decree or custody for purpose of adoption decree from other Convention countries or from U.S. authorities.

7. *Comment:* Some commenters request clarification of the application process for HACs and HCDs. In particular, commenters want to know if a HAC or HCD is automatically issued even if no party applies. Similarly, other commenters believe that the Department should always issue a HAC or HCD after a State court grants an adoption or custody for purpose of adoption decree. Others are concerned that many parties will be unaware that for outgoing cases involving Convention adoptions, the receiving country is obligated not to permit the child's entry unless the Department (as CA of the country of origin) has issued a HAC or HCD for the child.

Response: Unless there is an application from a party or other interested person, in accordance with § 97.2(a), the Department will not *sua sponte* issue a HAC or HCD. The Department must be notified, via the application process, for the HAC or HCD to be issued. We expect that the adoption service provider working with the family would inform the prospective adoptive parent(s) of any necessary requirements, including the need for a HAC or HCD. In any case, a party or interested person may apply for a HAC or HCD at any time.

Once a party applies for a HAC or HCD, the Department, in its role as CA, must adjudicate the request to determine if the child has been adopted or custody of the child for purposes of adoption has been granted in accordance with the Convention and (except as provided in § 97.4(b)) the IAA. Specifically, section 303(c) of the IAA provides that the Department shall issue a HAC or HCD *on receipt and verification* of the required material and information. The Department may thus not issue a HAC or HCD for all cases.

The rule mirrors the IAA statutory requirements and is not changed in response to the comment. The parties must first apply to a State court to make the needed findings, all derived from the Convention or the IAA, so that the proceeding is Hague-compliant. The Department then reviews the State court findings to adjudicate the application before issuing a HAC or HCD. The Department may not assume that every adoption or custody for purpose of adoption case will automatically conform with the Convention and the IAA, as implemented through § 97.3, and issue a HAC or HCD without adjudicating the application.

We understand that some parties to intercountry adoptions may be unaware of the Convention and the IAA and consequently may not submit to the State court the information the court needs to make the findings required under § 97.3. The Department plans to continue its extensive outreach efforts to inform interested persons about the Convention, the IAA, and the applicable regulations. To date, we have conducted numerous outreach events with State court judges, public domestic authorities, and adoption service providers.

8. *Comment:* One commenter suggests that the Department is withholding recognition of the State court adoption or custody decree if it declines to issue the HAC or HCD.

Response. By verifying compliance with § 97.3 before issuing a HAC or HCD, the Department is acting in accordance with Article 23 of the Convention. The Department's verification that all steps in the adoption and/or custody process complied with the Convention, the IAA, and the regulations implementing the IAA ensures that U.S. children leaving the United States are protected in accordance with the Convention.

9. *Comment:* One commenter requests that the rule include language on the legal effect of a HAC or HCD similar to the language in Section 302(b) of the IAA with respect to incoming cases (*i.e.*, cases in which a child is immigrating to the United States).

Response: Article 23 of the Convention requires other Convention countries to recognize an adoption that has been certified by the competent authority of the State of the adoption. Therefore, Convention countries must recognize any adoption for which the Department has issued a HAC. Including a requirement in U.S. regulations is therefore unnecessary. In addition, the United States has no authority to regulate the receiving countries.

As for the HCD, Article 19 of the Convention provides that the transfer of the child to the receiving country may be carried out only if the requirements of Article 17 have been satisfied. The HCD demonstrates to the receiving country that the United States, as the country of origin, has agreed that the child may be entrusted to the prospective adoptive parent(s) and that the adoption may proceed in the receiving country. The Department expects that the receiving countries will

recognize the HCD as evidence that the Article 17 requirements have been met. In any event, as noted, the United States may not regulate another Convention country.

Section 97.3 Requirements Subject to Verification in an Outgoing Convention Case

1. *Comment:* Several commenters request that the reasonable efforts requirement to locate a placement for the child in the United States in § 97.3(c) not apply when birthparent(s) directly identify prospective parent(s) outside the United States. One commenter suggests that such contacts be permitted as long as an accredited, temporarily accredited, or approved adoption service provider is involved in the case.

Response: This provision cross-references 22 CFR 96.54(a), which specifically excludes from the reasonable efforts requirement cases in which the birthparent(s) have identified specific prospective adoptive parent(s) or in other special circumstances accepted by the State court.

2. *Comment:* One commenter recommends that the rule specify more clearly the steps that must be completed for a reasonable efforts finding to be made by the State court.

Response: As noted above, this provision cross-references 22 CFR 96.54(a), which sets forth the placement standards in outgoing cases, including the reasonable efforts requirement. Specifically, reasonable efforts to find a timely placement for the child in the United States include: (1) Disseminating information on the child and his or her availability for adoption through print, media, and internet resources designed to communicate with potential prospective adoptive parent(s) in the United States; (2) Listing information about the child on a national or State adoption exchange or registry for at least sixty calendar days after the birth of the child; (3) Responding to inquiries about adoption of the child; and (4) Providing a copy of the child background study to potential U.S. prospective adoptive parent(s).

3. *Comment:* One commenter objects to the sixty-day period for listing information about the child on a national or State adoption exchange or registry because research shows that delays in placement negatively impact a child's emotional well-being.

Response: This comment goes to 22 CFR part 96 and was addressed in the context of that rule. Part 96 is now a final rule and no longer open for comment.

4. *Comment:* One commenter asks if the provision in 97.3(f), which limits contacts between the prospective adoptive parent(s) and the child's birthparent(s) or any other person who has care of the child before the adoption, prevents birthparent(s) from identifying prospective adoptive parent(s) via such methods as reviewing parent profiles provided by an attorney for the prospective adoptive parent(s), or provided by an attorney for the birthparent(s), or provided by an agency, or made available online. The commenter also asks if birthparent(s) may identify prospective adoptive parent(s) via referrals from non-relatives or by responding to advertisements placed in newspapers.

Response: Section 97.3(j) implements the requirements in Article 29 of the Convention. Article 29's prohibition on prior contact applies unless the adoption takes place within a family or *the contact is in compliance with the conditions established in the country of origin*, in this case the United States. For this reason, § 97.3(j) permits contacts when a ''relevant State or public domestic authority has established conditions under which such contact may occur and any such contact occurred in accordance with such conditions.'' The answers to the commenter's questions thus depend on local law and regulations.

A State or a public domestic authority may establish conditions on direct contacts between birthparent(s) and prospective adoptive parent(s). If such conditions are set, then contacts that comply with those conditions may occur. If a State has no laws or conditions on direct contacts, then such contacts may not occur because the Convention intends that such contacts be either barred or subject to regulation.

If these principles are applied to the commenter's questions, then the answer to what direct contacts are permitted will necessarily depend on the State where the birthparent(s) are residing. If the State where the birthparent(s) reside permits them to review prospective adoptive parent(s) profiles before the referral or adoption or consider non-relative referrals, then the practice is not *per se* prohibited, but must comply with any specific State requirements, such as those on who may present the information (attorney for prospective adoptive parent(s) or birthparent(s) or adoption service provider). If State requirements are completely silent, then direct contact practices are not allowed. Likewise, if the State permits birthparent(s) to locate prospective adoptive parent(s) through media such as newspapers or Web sites, then such contacts may occur in States which expressly permit such contacts and prescribe the conditions under which such contacts may occur.

5. *Comment:* Another commenter asks if States that allow ''open adoptions'' in which the birthparent(s) and prospective adoptive parents(s) meet and establish a trusting relationship before the adoption must change their laws. The commenter notes that oftentimes the open contacts continue throughout the child's life and that current psychological research supports the conclusion that such bonds are beneficial to the adoptee in the long-run.

Response: These regulations do not require States to change their laws with respect to contacts. As discussed above, pre-birth contacts are permitted in Convention cases if they are allowed by the relevant State law or public domestic authority and the contacts occurred in accordance with required conditions.

6. *Comment:* One commenter asks if the no direct contacts provision of the rule applied to the U.S. government-sponsored *http://www.AdoptUSKids.org* photo listing service. The commenter explains that public domestic authorities put a photo and information about a child eligible for adoption (usually a child or sibling group that has been waiting a long time for a permanent family placement) on the web-based service and families from all over the world may express an interest in the child to the public domestic authority, submit a home study, and then social workers for the public domestic authority determine if a referral and subsequent match are in the best interests of the child. If so, then the public domestic authority undertakes the subsequent steps to complete an adoption, including in some cases, supervising meetings with the birthparent(s), the child, and the prospective adoptive parent(s).

Response: Public domestic authorities must comply with 22 CFR part 97. As discussed above, contacts are generally prohibited, unless the relevant State or public domestic authority has established conditions under which such contact may occur and any such contact occurred in accordance with such conditions. Presumably, because the public domestic authority is coordinating the adoption, it has established procedures on the contacts. If the conditions for the contacts have been enumerated, then the contacts may continue even for Hague cases as long as the contacts comply with the procedures that the public domestic authority established. Thus, if a State or

its public domestic authorities permit birthparent(s) and the child to meet with the prospective adoptive parent(s) then this contact would be permitted. As for the question about the photo-listing service, unless State law prohibits photo-listings of children eligible for adoption, States may continue to post information about such children on the federally-funded national Web site.

Section 97.5 Certification of Hague Convention Compliance in an Incoming Convention Case Where Adoption Occurs in the United States

1. *Comment:* Two commenters are concerned that the certification procedure in § 97.5 means that adoptions of children immigrating to the United States (incoming cases) that are completed in the United States (as receiving country) after the country of origin granted custody for purposes of adoption are not entitled to recognition under Convention Article 23.

Response: Article 23 of the Convention requires other Convention countries to recognize an adoption that has been certified as having been made in accordance with the Convention by the competent authority of the State of the adoption. If custody for purpose of adoption is granted in a Convention country of origin and the prospective adoptive parent(s) subsequently obtain a final adoption decree in a State court, the adoption is entitled to recognition under the Convention, provided that the State court decree is based on a certificate issued by a consular officer pursuant to 22 CFR 42.24(j) certifying that the grant of custody of the child occurred in compliance with the Convention or on the court's determination that the requirements of Article 17 of the Convention have been met. This is true regardless of whether the parent(s) or child apply for the additional certification under § 97.5 because, as pointed out by the commenters, the recognition of the adoption takes place by operation of law with or without subsequent certification by the Department. The U.S. adoption would necessarily be recognized in all U.S. territory, but if the parent(s) or other persons need documentation to show that the Convention adoption finalized in the United States was done in accordance with the Convention, they may seek the certification as outlined in § 97.5. In addition, they may rely on the State court adoption order. We have added a paragraph to § 97.5 to make clear that the final State court order shall constitute the certification under Article 23 of the Convention.

2. *Comment:* One commenter requests that the rule be changed to require prospective adoptive parent(s) who have been granted custody for purpose of adoption by the country of origin (in incoming cases) to complete adoptions in the United States.

Response: The Department is not modifying the rule as requested. Although the prospective adoptive parent(s) failure to finalize the adoption is problematic, the IAA does not require prospective adoptive parent(s) to obtain a final adoption decree in a U.S. State court when only custody for purpose of adoption was granted in the country of origin. Moreover, this rule relates to certifications of adoptions pursuant to the Convention.

We nevertheless share the commenter's concern about adoptions that are not finalized. The Department currently has experience with a few such cases in which the prospective adoptive parent(s) are granted custody for purpose of adoption in the country of origin, bring the child to the United States, and never finalize the adoption. The family is typically intact and the child is benefiting from an ongoing permanent placement so there is no basis for the State to remove the child. Yet, there is no final adoption, the child does not acquire U.S. citizenship under The Child Citizenship Act, and remains a legal permanent resident, subject to deportation under certain limited circumstances. Similarly, the child does not have all the additional benefits of a full legal parent-child relationship. Despite these issues, there is no current authority or new authority in the IAA granting the Department or the Department of Homeland Security (DHS) the authority to compel finalization of the adoption. We plan to continue our outreach and communication efforts to stress to families and adoption service provider(s) the critical importance of finalizing the adoption in both Convention and non-Convention cases.

3. *Comment:* Some commenters request that the rule be changed to mandate that the Department always issue a certification under § 97.5 after the parent(s) complete the final adoption in the United States. One commenter was concerned that a person requesting the certification must show a need for it, including a showing that the child would be traveling overseas.

Response. The Department is not modifying the rule in response to this request. The Department cannot issue a certification under 97.5 absent a request because it has no means to know when a State court issues an adoption decree. However, the intent of § 97.5 was not to limit the issuance of these certifications solely to instances where there is a showing of exceptional need or if the child would be traveling. We have deleted § 97.5(3) that required parties to submit a signed statement explaining the need for such a certification.

4. *Comment:* One commenter is concerned that countries of origin expect copies of the Article 23 certification to be sent in every case where the adoption is completed by a final adoption order in the United States and cite Articles 7, 20, and 23, and of the Convention for support.

Response: The Department believes that its rule on Convention Article 23 certifications is consistent with the Convention provisions cited and implements the Convention. Specifically, as noted above, the IAA does not require that families finalize the adoptions or notify the Department when the adoptions are final. We will use all other available means to obtain information on the final adoption of the child for the child's country of origin, including relying on 22 CFR 96.50(h)(2), which requires accredited agencies, temporarily accredited agencies, and approved persons, to notify the Department of the finalization of the adoption within thirty days of the entry of the final adoption order. We believe that through 22 CFR 96.50(h)(2) combined with the final rule in § 97.5(e), making clear that the State court final adoption decree may serve as the Convention Article 23 certification, the United States will fulfill its Convention obligations.

Regulatory Review

A. Administrative Procedures Act

This rule, through which the Department provides for implementation of the Convention, which focuses on issuance of documents to facilitate cross-border recognition of adoptions done under the Convention, involves a foreign affairs function of the United States and therefore pursuant to 5 U.S.C. 553(a)(1) is not subject to the procedures required by 5 U.S.C. 553 and 554. Nonetheless, the Department published the proposed rule and received public comment on it.

B. Regulatory Flexibility Act/Executive Order 13272: Small Business

In accordance with the Regulatory Flexibility Act, 5 U.S.C. 601–612, and Executive Order 13272, Section 3(b), the Department of State has evaluated the effects of this rule on small entities and has determined and hereby certifies that this rule would not have a significant

economic impact on a substantial number of small entities.

C. Small Business Regulatory Enforcement Fairness Act of 1996

This rule is not a major rule as defined by 5 U.S.C. 804 for purposes of congressional review of agency rulemaking under the Small Business Regulatory Enforcement Fairness Act of 1996, Pub. L. 104–121. The rule would not result in an annual effect on the economy of $100 million or more, a major increase in costs or prices, or significant adverse effects on competition, employment, investment, productivity, or innovation, or on the ability of United States-based companies to compete with foreign-based companies in domestic and export markets.

D. The Unfunded Mandates Reform Act of 1995

Section 202 of the Unfunded Mandates Reform Act of 1995 (UFMA), Pub. L. 104–4; 109 Stat. 48; 2 U.S.C. 1532, generally requires agencies to prepare a statement, including cost-benefit and other analyses, before proposing any rule that may result in an annual expenditure of $100 million or more by State, local, or tribal governments, or by the private sector. Section 4 of UFMA, 2 U.S.C. 1503, excludes regulations necessary for implementation of treaty obligations. This rule falls within this exclusion because it would implement the Convention. In any event, this rule would not result in the expenditure by State, local, or tribal governments, in the aggregate, or by the private sector, of $100 million or more in any year. Moreover, because this rule would not significantly or uniquely affect small governments, section 203 of the UFMA, 2 U.S.C. 1533, does not require preparation of a small government agency plan in connection with it.

E. Executive Order 13132: Federalism

A rule has federalism implications under Executive Order 13132 if it has substantial direct effects on the States, on the relationship between the national government and the States, or on the distribution of power and responsibilities among the various levels of government. This rule will not have such effects, and therefore does not have sufficient federalism implications to require consultations or to warrant the preparation of a federalism summary impact statement under section 6 of Executive Order 13132.

The Convention and the IAA do, however, address issues that previously had been regulated primarily at the State level, as discussed in the preamble to the proposed rule on accreditation and approval of agencies and persons, appearing at 68 FR 54064, 54069–54070. In recognition of this fact, section 503(a) of the IAA contains a specific provision limiting preemption of State law to those State law provisions inconsistent with the Convention or the IAA, and only to the extent of the inconsistency. This rule does not create new federalism implications beyond those created by the IAA and the Convention, and the Department has been careful in this rule to defer to State authorities whenever possible consistent with Convention and IAA mandates. We also envision significant outreach and consultation with appropriate State authorities in the implementation of any regulation on this topic.

F. Executive Order 12866: Regulatory Review

This rule, through which the Department provides for implementation of the Convention, which focuses on issuance of documents to facilitate cross-border recognition of adoptions done under the Convention, pertains to a foreign affairs function of the United States; therefore, pursuant to section 3(d)(2) of the Executive Order 12866, this rule is not subject to the review procedures set forth in Executive Order 12866. In addition, the Department is exempt from Executive Order 12866 except to the extent it is promulgating regulations in conjunction with a domestic agency that are significant regulatory actions. The Department of State, however, provided the proposed rule to OMB for comment and incorporated its comments. The Department is not submitting the final rule to OMB, but has reviewed it to ensure consistency with the regulatory philosophy and principles set forth in Executive Order 12866.

G. Executive Order 12988: Civil Justice Reform

The Department has reviewed this rule in light of sections 3(a) and 3(b)(2) of Executive Order 12988 to eliminate ambiguity, minimize litigation, establish clear legal standards, and reduce burden. The Department has made every reasonable effort to ensure compliance with the requirements in Executive Order 12988.

H. The Paperwork Reduction Act (PRA) of 1995

Under the Paperwork Reduction Act (PRA), 42 U.S.C. 3501 *et seq.*, agencies are generally required to submit to OMB for review and approval information collection requirements imposed on ''persons'' as defined in the PRA. Section 503(c) of the IAA, however, exempts from the PRA any information collection ''for purposes of sections 104, 202(b)(4), and 303(d)'' of the IAA ''or for use as a Convention record as defined'' in the IAA. Convention record is defined in section 3(11) of the IAA to mean ''any item, collection, or grouping of information contained in an electronic or physical document, an electronic collection of data, a photograph, an audio or video tape, or any other information storage medium of any type whatever that contains information about a specific past, current, or prospective Convention adoption (regardless of whether the adoption was made final) that has been preserved in accordance with section 401(a) by the Secretary of State or the Attorney General.'' Information collections imposed on persons pursuant to this rule would relate directly to specific Convention adoptions (whether final or not), insofar as collections would be used by the Department in its determination of whether a Convention adoption, or a grant of custody for purposes of a Convention adoption, has been conducted in accordance with the Convention and the IAA. Upon receipt, these information collections would be subject to the preservation requirements set forth in 22 CFR part 98 to implement section 401(a) of the IAA. Accordingly, the Department has concluded that the PRA would not apply to information collected from the public under this rule, for the purpose of determining entitlement to a Hague Adoption Certificate or Hague Custody Declaration, or a certification of Convention compliance pursuant to § 97.5, because such documents would be collected for use as Convention records.

The Department intends, nonetheless, to consider carefully how to minimize the burden on the public of information collections contained in this rule as such collections, in particular the required application form, continue to be developed.

List of Subjects in 22 CFR Part 97

Adoption and foster care; International agreements; Reporting and recordkeeping requirements.

■ Accordingly, the Department adds new part 97 to title 22 of the CFR, chapter I, subchapter J, to read as follows:

PART 97—ISSUANCE OF ADOPTION CERTIFICATES AND CUSTODY DECLARATIONS IN HAGUE CONVENTION ADOPTION CASES

Sec.
97.1 Definitions.
97.2 Application for a Hague Adoption Certificate or a Hague Custody Declaration (Outgoing Convention Case).
97.3 Requirements Subject to Verification in an Outgoing Convention Case.
97.4 Issuance of a Hague Adoption Certificate or a Hague Custody Declaration (Outgoing Convention Case).
97.5 Certification of Hague Convention Compliance in an Incoming Convention Case Where Final Adoption Occurs in the United States.
97.6–97.7 [Reserved].

Authority: Convention on Protection of Children and Co-operation in Respect of Intercountry Adoption (done at The Hague, May 29, 1993), S. Treaty Doc. 105–51 (1998); 1870 U.N.T.S. 167 (Reg. No. 31922 (1993)); Intercountry Adoption Act of 2000, 42 U.S.C. 14901–14954.

§ 97.1 Definitions.

As used in this part:

(a) *Adoption Court* means the State court with jurisdiction over the adoption or the grant of custody for purpose of adoption.

(b) *U.S. Authorized Entity* means a public domestic authority or an agency or person that is accredited or temporarily accredited or approved by an accrediting entity pursuant to 22 CFR part 96, or a supervised provider acting under the supervision and responsibility of an accredited agency or temporarily accredited agency or approved person.

(c) *Foreign Authorized Entity* means a foreign Central Authority or an accredited body or entity other than the Central Authority authorized by the relevant foreign country to perform Central Authority functions in a Convention adoption case.

(d) *Hague Adoption Certificate* means a certificate issued by the Secretary in an outgoing case (where the child is emigrating from the United States to another Convention country) certifying that a child has been adopted in the United States in accordance with the Convention and, except as provided in § 97.4(b), the IAA.

(e) *Hague Custody Declaration* means a declaration issued by the Secretary in an outgoing case (where the child is emigrating from the United States to another Convention country) declaring that custody of a child for purposes of adoption has been granted in the United States in accordance with the Convention and, except as provided in § 97.4(b), the IAA.

(f) Terms defined in 22 CFR 96.2 have the meaning given to them therein.

§ 97.2 Application for a Hague Adoption Certificate or a Hague Custody Declaration (Outgoing Convention Case).

(a) Once the Convention has entered into force for the United States, any party to an outgoing Convention adoption or custody proceeding may apply to the Secretary for a Hague Adoption Certificate or a Hague Custody Declaration. Any other interested person may also make such application, but such application will not be processed unless such applicant demonstrates that a Hague Adoption Certificate or Hague Custody Declaration is needed to obtain a legal benefit or for purposes of a legal proceeding, as determined by the Secretary in the Secretary's discretion.

(b) Applicants for a Hague Adoption Certificate or Hague Custody Declaration shall submit to the Secretary:

(1) A completed application form in such form as the Secretary may prescribe, with any required fee;

(2) An official copy of the order of the adoption court finding that the child is eligible for adoption and that the adoption or proposed adoption is in the child's best interests and granting the adoption or custody for purposes of adoption;

(3) An official copy of the adoption court's findings (either in the order granting the adoption or custody for purposes of adoption or separately) verifying, in substance, that each of the requirements of § 97.3 has been complied with or, if the adoption court has not verified compliance with a particular requirement in § 97.3, authenticated documentation showing that such requirement nevertheless has been met and a written explanation of why the adoption court's verification of compliance with the requirement cannot be submitted; and

(4) Such additional documentation and information as the Secretary may request at the Secretary's discretion.

(c) If the applicant fails to submit all of the documentation and information required pursuant to paragraph (b)(4) of this section within 120 days of the Secretary's request, the Secretary may consider the application abandoned.

§ 97.3 Requirements Subject to Verification in an Outgoing Convention Case.

(a) *Preparation of Child Background Study.* An accredited agency, temporarily accredited agency, or public domestic authority must complete or approve a child background study that includes information about the child's identity, adoptability, background, social environment, family history, medical history (including that of the child's family), and any special needs of the child.

(b) *Transmission of Child Data.* A U.S. authorized entity must conclude that the child is eligible for adoption and, without revealing the identity of the birth mother or the birth father if these identities may not be disclosed under applicable State law, transmit to a foreign authorized entity the background study, proof that the necessary consents have been obtained, and the reason for its determination that the proposed placement is in the child's best interests, based on the home study and child background study and giving due consideration to the child's upbringing and his or her ethnic, religious, and cultural background.

(c) *Reasonable Efforts to find Domestic Placement.* Reasonable efforts pursuant to 22 CFR 96.54 must be made to actively recruit and make a diligent search for prospective adoptive parent(s) to adopt the child in the United States and a timely adoptive placement in the United States not found.

(d) *Preparation and Transmission of Home Study.* A U.S. authorized entity must receive from a foreign authorized entity a home study on the prospective adoptive parent(s) prepared in accordance with the laws of the receiving country, under the responsibility of a foreign Central Authority, foreign accredited body, or public foreign authority, that includes:

(1) Information on the prospective adoptive parent(s)' identity, eligibility, and suitability to adopt, background, family and medical history, social environment, reasons for adoption, ability to undertake an intercountry adoption, and the characteristics of the children for whom they would be qualified to care;

(2) Confirmation that a competent authority has determined that the prospective adoptive parent(s) are eligible and suited to adopt and has ensured that the prospective adoptive parent(s) have been counseled as necessary; and

(3) The results of a criminal background check.

(e) *Authorization to Enter.* The Central Authority or other competent authority of the receiving country must declare that the child will be authorized to enter and reside in the receiving country permanently or on the same basis as the adopting parent(s).

(f) *Consent by Foreign Authorized Entity.* A foreign authorized entity or competent authority must declare that it

consents to the adoption, if its consent is necessary under the law of the relevant foreign country for the adoption to become final.

(g) *Guardian Counseling and Consent.* Each person, institution, and authority (other than the child) whose consent is necessary for the adoption must be counseled as necessary and duly informed of the effects of the consent (including whether or not an adoption will terminate the legal relationship between the child and his or her family of origin); must freely give consent expressed or evidenced in writing in the required legal form without any inducement by compensation of any kind; and consent must not have been subsequently withdrawn. If the consent of the mother is required, it may be given only after the birth of the child.

(h) *Child Counseling and Consent.* As appropriate in light of the child's age and maturity, the child must be counseled and informed of the effects of the adoption and the child's views must be considered. If the child's consent is required, the child must also be counseled and informed of the effects of granting consent, and must freely give consent expressed or evidenced in writing in the required legal form without any inducement by compensation of any kind.

(i) *Authorized Entity Duties.* A U.S. authorized entity must:

(1) Ensure that the prospective adoptive parent(s) agree to the adoption;

(2) Agree, together with a foreign authorized entity, that the adoption may proceed;

(3) Take all appropriate measures to ensure that the transfer of the child takes place in secure and appropriate circumstances and, if possible, in the company of the adoptive parent(s) or the prospective adoptive parent(s), and arrange to obtain permission for the child to leave the United States; and

(4) Arrange to keep a foreign authorized entity informed about the adoption process and the measures taken to complete it, as well as about the progress of the placement if a probationary period is required; to return the home study and the child background study to the authorities that forwarded them if the transfer of the child does not take place; and to be consulted in the event a new placement or alternative long-term care for the child is required.

(j) *Contacts.* Unless the child is being adopted by a relative, there may be no contact between the prospective adoptive parent(s) and the child's birthparent(s) or any other person who has care of the child prior to the competent authority's determination that the prospective adoptive parent(s) are eligible and suited to adopt and the adoption court's determinations that the child is eligible for adoption, that the requirements in paragraphs (c) and (g) of this section have been met, and that an intercountry adoption is in the child's best interests, *provided that* this prohibition on contacts shall not apply if the relevant State or public domestic authority has established conditions under which such contact may occur and any such contact occurred in accordance with such conditions.

(k) *Improper financial gain.* No one may derive improper financial or other gain from an activity related to the adoption, and only costs and expenses (including reasonable professional fees of persons involved in the adoption) may be charged or paid.

§ 97.4 Issuance of a Hague Adoption Certificate or a Hague Custody Declaration (Outgoing Convention Case).

(a) Once the Convention has entered into force for the United States, the Secretary shall issue a Hague Adoption Certificate or a Hague Custody Declaration if the Secretary, in the Secretary's discretion, is satisfied that the adoption or grant of custody was made in compliance with the Convention and the IAA.

(b) If compliance with the Convention can be certified but it is not possible to certify compliance with the IAA, the Secretary personally may authorize issuance of an appropriately modified Hague Adoption Certificate or Hague Custody Declaration, in the interests of justice or to prevent grave physical harm to the child.

§ 97.5 Certification of Hague Convention Compliance in an Incoming Convention Case Where Final Adoption Occurs in the United States.

(a) Once the Convention has entered into force for the United States, any person may request the Secretary to certify that a Convention adoption in an incoming case finalized in the United States was done in accordance with the Convention.

(b) Persons seeking such a certification must submit the following documentation:

(1) A copy of the certificate issued by a consular officer pursuant to 22 CFR 42.24(j) certifying that the granting of custody of the child has occurred in compliance with the Convention;

(2) An official copy of the adoption court's order granting the final adoption; and

(3) Such additional documentation and information as the Secretary may request at the Secretary's discretion.

(c) If a person seeking the certification described in paragraph (a) of this section fails to submit all the documentation and information required pursuant to paragraph (b) of this section within 120 days of the Secretary's request, the Department may consider the request abandoned.

(d) The Secretary may issue the certification if the Secretary, in the Secretary's discretion, is satisfied that the adoption was made in compliance with the Convention. The Secretary may decline to issue a certification, including to a party to the adoption, in the Secretary's discretion. A certification will not be issued to a non-party requestor unless the requestor demonstrates that the certification is needed to obtain a legal benefit or for purposes of a legal proceeding, as determined by the Secretary in the Secretary's discretion.

(e) A State court's final adoption decree, when based upon the certificate issued by a consular officer pursuant to 22 CFR 42.24(j), certifying that the grant of custody of the child has occurred in compliance with the Convention, or upon its determination that the requirements of Article 17 of the Convention have been met constitutes the certification of the adoption under Article 23 of the Convention.

§ 97.6–97.7 [Reserved]

Dated: October 12, 2006.

Maura Harty,

Assistant Secretary, Bureau of Consular Affairs, Department of State.

[FR Doc. E6–18507 Filed 11–1–06; 8:45 am]

BILLING CODE 4710–06–P

DEPARTMENT OF THE TREASURY

Internal Revenue Service

26 CFR Parts 1 and 301

[TD 9295]

RIN 1545–BF98

AJCA Modifications to the Section 6011, 6111, and 6112 Regulations

AGENCY: Internal Revenue Service (IRS), Treasury.

ACTION: Final and temporary regulations.

SUMMARY: This document contains temporary and final regulations under sections 6011, 6111, and 6112 of the Internal Revenue Code that modify the rules relating to the disclosure of reportable transactions and the list maintenance requirements. These regulations affect taxpayers

participating in reportable transactions under section 6011, material advisors responsible for disclosing reportable transactions under section 6111, and material advisors responsible for keeping lists under section 6112. These temporary and final regulations are being issued concurrently with proposed regulations under sections 6011, 6111, and 6112 published elsewhere in the **Federal Register**.

DATES: *Effective Date:* These regulations are effective November 1, 2006.

FOR FURTHER INFORMATION CONTACT: Tara P. Volungis or Charles Wien, 202–622–3070 (not a toll-free number).

SUPPLEMENTARY INFORMATION:

Background

This document amends 26 CFR parts 1 and 301 by modifying the rules relating to the disclosure of reportable transactions under sections 6011 and 6111 and the list maintenance rules under section 6112. On February 28, 2003, the IRS issued final regulations under sections 6011, 6111, and 6112 (TD 9046) (the February 2003 regulations). The February 2003 regulations were published in the **Federal Register** (68 FR 10161) on March 4, 2003. On December 29, 2003, the IRS issued final regulations under section 6011 and 6112 (TD 9108) (the December 2003 regulations). The December 2003 regulations were published in the **Federal Register** (68 FR 75128) on December 30, 2003.

Explanation of Provisions

These regulations relate to the provisions for obtaining a private letter ruling and the tolling of the time for providing disclosure under § 1.6011–4 and section 6111 and for maintaining a list under section 6112 during the time the request for a ruling is pending. Because the IRS and Treasury Department believe that the removal of the tolling provision will promote effective tax administration, these regulations eliminate the tolling of the time for providing disclosure and for maintaining the list when a taxpayer or a potential material advisor requests a private letter ruling. Proposed regulations removing the tolling provision are being issued concurrently with these temporary regulations. Taxpayers and potential material advisors may still request a ruling on a transaction under the regular procedures for requesting a ruling, provided the ruling request is not factual or hypothetical, but the time for providing disclosure or for maintaining a list will not be tolled. The removal of the tolling provision is effective for all ruling requests received on or after November 1, 2006.

Special Analyses

It has been determined that these regulations are not a significant regulatory action as defined in Executive Order 12866. Therefore, a regulatory assessment is not required. It also has been determined that section 553(b) of the Administrative Procedure Act (5 U.S.C. chapter 5) does not apply to these regulations. For applicability of the Regulatory Flexibility Act, please refer to the cross-reference notice of proposed rulemaking published elsewhere in this issue of the **Federal Register**. Pursuant to section 7805(f) of the Internal Revenue Code, this regulation will be submitted to the Chief Counsel for Advocacy of the Small Business Administration for comment on its impact on small business.

Drafting Information

The principal authors of these regulations are Tara P. Volungis and Charles Wien, Office of the Associate Chief Counsel (Passthroughs and Special Industries). However, other personnel from the IRS and Treasury Department participated in their development.

List of Subjects

26 CFR Part 1

Income taxes, Reporting and recordkeeping requirements.

26 CFR Part 301

Employment taxes, Estate taxes, Excise taxes, Gift taxes, Income taxes, Penalties, Reporting and recordkeeping requirements.

Amendments to the Regulations

■ Accordingly, 26 CFR parts 1 and 301 are amended as follows:

PART 1—INCOME TAXES

■ **Paragraph 1.** The authority citation for part 1 is amended by adding an entry in numerical order to read, in part, as follows:

Authority: 26 U.S.C. 7805 * * *
Section 1.6011–4T also issued under 26 U.S.C. 6011 * * *

■ **Par. 2.** Section 1.6011–4 is amended by:

■ 1. Revising paragraphs (f)(1) and (f)(3).

■ 2. Redesignating the text of paragraph (h) as (h)(1) and adding a heading.

■ 3. Adding paragraph (h)(2).

The revisions and additions read as follows:

§ 1.6011–4 Requirement of statement disclosing participation in certain transactions by taxpayers.

* * * * *

(f) * * * (1) [Reserved]. For further guidance, see § 1.6011–4T(f)(1).

(2) * * *

(3) [Reserved]. For further guidance, see § 1.6011–4T(f)(1).

* * * * *

(h) *Effective date*—(1) *In general.* * * *

(2) [Reserved]. For further guidance, see § 1.6011–4T(h)(2).

■ **Par. 3.** Section 1.6011–4T is added to read as follows:

§ 1.6011–4T Requirement of statement disclosing participation in certain transactions by taxpayers (temporary).

(a) through (e) [Reserved]. For further guidance, see § 1.6011–4(a) through (e).

(f) *Rulings and protective disclosures*—(1) *Rulings.* If a taxpayer requests a ruling on the merits of a specific transaction on or before the date that disclosure would otherwise be required under this section, and receives a favorable ruling as to the transaction, the disclosure rules under this section will be deemed to have been satisfied by that taxpayer with regard to that transaction, so long as the request fully discloses all relevant facts relating to the transaction which would otherwise be required to be disclosed under this section. If a taxpayer requests a ruling as to whether a specific transaction is a reportable transaction on or before the date that disclosure would otherwise be required under this section, the Commissioner in his discretion may determine that the submission satisfies the disclosure rules under this section for the taxpayer requesting the ruling for that transaction if the request fully discloses all relevant facts relating to the transaction which would otherwise be required to be disclosed under this section. The potential obligation of the taxpayer to disclose the transaction under this section will not be suspended during the period that the ruling request is pending.

(f)(2) through (g) [Reserved]. For further guidance, see § 1.6011–4(f)(2) through (g).

(h) *Effective date*—(1) [Reserved]. For further guidance, see § 1.6011–4(h)(1).

(2) *Tolling provision.* Paragraph (f)(1) of this section applies to ruling requests received on or after November 1, 2006. The applicability of this section expires on or before November 2, 2009.

PART 301—PROCEDURE AND ADMINISTRATION

■ **Par. 4.** The authority citation for part 301 is amended by adding an entry in numerical order to read, in part, as follows:

Authority: 26 U.S.C. 7805 * * *
Section 301.6111–3T also issued under 26 U.S.C. 6111 * * *

■ **Par. 5.** Section 301.6111–3T is added to read as follows:

§ 301.6111–3T Disclosure of reportable transactions (temporary).

(a) through (g) [Reserved].

(h) *Rulings.* If a potential material advisor requests a ruling as to whether a specific transaction is a reportable transaction on or before the date that disclosure would otherwise be required under this section, the Commissioner in his discretion may determine that the submission satisfies the disclosure rules under this section for that transaction if the request fully discloses all relevant facts relating to the transaction which would otherwise be required to be disclosed under this section. The potential obligation of the person to disclose the transaction under this section (or to maintain or furnish the list under § 301.6112–1) will not be suspended during the period that the ruling request is pending.

(i) *Effective date*—(1) [Reserved].

(2) *Tolling provision.* Paragraph (h) of this section applies to ruling requests received on or after November 1, 2006. The applicability of this section expires on or before November 2, 2009.

■ **Par. 6.** Section 301.6112–1 is amended by revising paragraph (i) to read as follows:

§ 301.6112–1 Requirement to prepare, maintain, and furnish lists with respect to potentially abusive tax shelters.

* * * * *

(i) [Reserved]. For further guidance, see § 301.6111–3T(h).

* * * * *

Mark E. Matthews,

Deputy Commissioner for Services and Enforcement.

Approved: October 25, 2006.

Eric Solomon,

Acting Deputy Assistant Secretary of the Treasury (Tax Policy).

[FR Doc. E6–18317 Filed 11–1–06; 8:45 am]

BILLING CODE 4830–01–P

ENVIRONMENTAL PROTECTION AGENCY

40 CFR Part 52

[R08–WY–2006–0001; FRL–8236–2]

Approval and Promulgation of Air Quality Implementation Plans; Revised Format for Materials Being Incorporated by Reference for Wyoming

AGENCY: Environmental Protection Agency (EPA).

ACTION: Final rule; notice of administrative change.

SUMMARY: EPA is revising the format of 40 CFR part 52 for materials submitted by the State of Wyoming that are incorporated by reference (IBR) into its State Implementation Plan (SIP). The regulations affected by this format change have all been previously submitted by Wyoming and approved by EPA.

DATES: *Effective Date:* This action is effective November 2, 2006.

ADDRESSES: SIP materials which are incorporated by reference into 40 CFR part 52 are available for inspection at the following locations: Air and Radiation Program, Environmental Protection Agency (EPA), Region 8, 999 18th Street, Suite 300, Denver, Colorado 80202–2466; the Air and Radiation Docket and Information Center, EPA Headquarters Library, Infoterra Room (Room Number 3334), EPA West Building, 1301 Constitution Ave., NW., Washington, DC 20460, and the National Archives and Records Administration. If you wish to view Wyoming's SIP material being incorporated by reference in: (1) The EPA Region 8 Office, please contact the individual listed in the **FOR FURTHER INFORMATION CONTACT** section; or (2) in the EPA Headquarters Library, please call the Office of Air and Radiation (OAR) Docket/Telephone number, (202) 566–1742. For information on the availability of this material at NARA, call 202–741–6030, or go to: *http://www.archives.gov/federal-register/cfr/ibr-locations.html.*

FOR FURTHER INFORMATION CONTACT: Laurie Ostrand, EPA, Region 8, (303) 312–6437, *ostrand.laurie@epa.gov.*

SUPPLEMENTARY INFORMATION: Throughout this document, wherever ''we'' or ''our'' is used it means the EPA.

Table of Contents

I. Change of IBR Format
A. Description of a SIP
B. How EPA Enforces the SIP
C. How the State and EPA Update the SIP
D. How EPA Compiles the SIP
E. How EPA Organizes the SIP Compilation
F. Where You Can Find a Copy of the SIP Compilation
G. The Format of the New Identification of Plan Section
H. When a SIP Revision Becomes Federally Enforceable
I. The Historical Record of SIP Revision Approvals
II. What EPA Is Doing in This Action
III. Good Cause Exemption
IV. Statutory and Executive Order Review

I. Change of IBR Format

This format revision will affect the ''Identification of plan'' section of 40 CFR part 52, as well as the format of the SIP materials that will be available for public inspection at the National Archives and Records Administration (NARA); the Air and Radiation Docket and Information Center located at EPA Headquarters in Washington, DC; and the EPA Region 8 Office.

A. Description of a SIP

Each state has a SIP containing the control measures and strategies used to attain and maintain the national ambient air quality standards (NAAQS) and achieve certain other Clean Air Act (Act) requirements (e.g., visibility requirements, prevention of significant deterioration). The SIP is extensive, containing such elements as air pollution control regulations, emission inventories, monitoring network descriptions, attainment demonstrations, and enforcement mechanisms.

B. How EPA Enforces the SIP

Each SIP revision submitted by Wyoming must be adopted at the state level after undergoing reasonable notice and public hearing. SIPs submitted to EPA to attain or maintain the NAAQS must include enforceable emission limitations and other control measures, schedules and timetables for compliance.

EPA evaluates submitted SIPs to determine if they meet the Act's requirements. If a SIP meets the Act's requirements, EPA will approve the SIP. EPA's notice of approval is published in the **Federal Register** and the approval is then codified in the Code of Federal Regulations (CFR) at 40 CFR part 52. Once EPA approves a SIP, it is enforceable by EPA and citizens in Federal district court.

EPA does not reproduce in 40 CFR part 52 the full text of the Wyoming regulations that we have approved; instead, we incorporate them by reference (''IBR''). EPA approves a given state regulation with a specific effective date and then refer the public to the location(s) of the full text version of the

state regulation(s) should they want to know which measures are contained in a given SIP (see ''I.F. Where You Can Find a Copy of the SIP Compilation'').

C. How the State and EPA Update the SIP

The SIP is a living document which the state can revise as necessary to address the unique air pollution problems in the state. Therefore, EPA from time to time must take action on SIP revisions containing new and/or revised regulations.

On May 22, 1997 (62 FR 27968), we announced revised procedures for incorporating by reference Federally approved SIPs. The procedures announced included: (1) A new process for incorporating by reference material submitted by states into compilations and a process for updating those compilations on roughly an annual basis; (2) a revised mechanism for announcing EPA approval of revisions to an applicable SIP and updating both the compilations and the CFR; and (3) a revised format for the ''Identification of plan'' sections for each applicable subpart to reflect these revised IBR procedures.

D. How EPA Compiles the SIP

EPA organized into a compilation the federally-approved regulations, source-specific requirements and nonregulatory provisions we have approved into the SIP. We maintain hard copies of the compilation in binders and we primarily update these binders on an annual basis.

E. How EPA Organizes the SIP Compilation

Each compilation contains three parts. Part one contains the state regulations, part two contains the source-specific requirements that have been approved as part of the SIP (if any), and part three contains nonregulatory provisions that we have approved. Each compilation contains a table of identifying information for each regulation, each source-specific requirement, and each nonregulatory provision. The state effective dates in the tables indicate the date of the most recent revision to a particular regulation. The table of identifying information in the compilation corresponds to the table of contents published in 40 CFR part 52 for the state. The EPA Regional Offices have the primary responsibility for ensuring accuracy and updating the compilations.

F. Where You Can Find a Copy of the SIP Compilation

EPA Region 8 developed and will maintain the compilation for Wyoming. A hard copy of the regulatory and source-specific portions of the compilation will also be maintained at the Air and Radiation Docket and Information Center, EPA Headquarters Library, Infoterra Room (Room Number 3334), EPA West Building, 1301 Constitution Ave., NW., Washington, DC 20460, and the National Archives and Records Administration. If you wish to view the SIP compilation in the EPA Region 8 Offices, please contact the individual listed in the **FOR FURTHER INFORMATION CONTACT** section. If you wish to view the regulatory and source specific portions of the SIP compilation in the EPA Headquarters Library, please call the Office of Air and Radiation (OAR) Docket/Telephone number: (202) 566–1742. For information on the availability of this material at NARA, call 202–741–6030, or go to: *http://www.archives.gov/federal-register/cfr/ibr-locations.html.* Copies of the Wyoming regulations we have approved are also available on the following Web page: *http://www.epa.gov/region8/air/sip.html.*

G. The Format of the New Identification of Plan Section

In order to better serve the public, EPA has revised the organization of the ''Identification of plan'' section in 40 CFR part 52 and included additional information to clarify the elements of the SIP.

The revised Identification of plan section for Wyoming contains five subsections:

1. Purpose and scope (see 40 CFR 52.2620(a));
2. Incorporation by reference (see 40 CFR 52.2620(b));
3. EPA-approved regulations (see 40 CFR 52.2620(c));
4. EPA-approved source-specific requirements (see 40 CFR 52.2620(d)); and
5. EPA-approved nonregulatory provisions such as transportation control measures, statutory provisions, control strategies, monitoring networks, etc. (see 40 CFR 52.2620(e)).

H. When a SIP Revision Becomes Federally Enforceable

All revisions to the applicable SIP are Federally enforceable as of the effective date of EPA's approval of the respective revisions. In general, SIP revisions become effective 30 to 60 days after publication of EPA's SIP approval action in the **Federal Register**. In specific cases, a SIP revision action may become effective less than 30 days or greater than 60 days after the **Federal Register** publication date. In order to determine the effective date of EPA's approval for a specific Wyoming SIP provision that is listed in paragraph 40 CFR 52.2620 (c), (d), or (e), consult the volume and page of the **Federal Register** cited in the ''EPA approval date'' column of 40 CFR 52.2620 for that particular provision.

I. The Historical Record of SIP Revision Approvals

To facilitate enforcement of previously approved SIP provisions and to provide a smooth transition to the new SIP processing system, we are retaining the original Identification of plan section (see 40 CFR 52.2635). This section previously appeared at 40 CFR 52.2620. After an initial two-year period, EPA will review our experience with the new table format and will decide whether or not to retain the original Identification of plan section (40 CFR 52.2635) for some further period.

II. What EPA Is Doing in This Action

Today's action constitutes a ''housekeeping'' exercise to reformat the codification of the EPA-approved Wyoming SIP.

III. Good Cause Exemption

EPA has determined that today's action falls under the ''good cause'' exemption in section 553(b)(3)(B) of the Administrative Procedure Act (APA) which, upon a finding of ''good cause,'' authorizes agencies to dispense with public participation, and section 553(d)(3), which allows an agency to make a rule effective immediately (thereby avoiding the 30-day delayed effective date otherwise provided for in the APA). Today's action simply reformats the codification of provisions which are already in effect as a matter of law.

Under section 553 of the APA, an agency may find good cause where procedures are ''impractical, unnecessary, or contrary to the public interest.'' Public comment is ''unnecessary'' and ''contrary to the public interest'' since the codification only reflects existing law. Likewise, there is no purpose served by delaying the effective date of this action.

IV. Statutory and Executive Order Review

A. General Requirements

Under Executive Order 12866 (58 FR 51735, October 4, 1993), this action is not a ''significant regulatory action'' and

is therefore not subject to review by the Office of Management and Budget. This rule is not subject to Executive Order 13211, ''Actions Concerning Regulations That Significantly Affect Energy Supply, Distribution, or Use'' (66 FR 28355, May 22, 2001) because it is not a significant regulatory action under Executive Order 12866. Because the agency has made a ''good cause'' finding that this action is not subject to notice-and-comment requirements under the Administrative Procedure Act or any other statute as indicated in the Supplementary Information section above, it is not subject to the regulatory flexibility provisions of the Regulatory Flexibility Act (5 U.S.C 601 *et seq.*), or to sections 202 and 205 of the Unfunded Mandates Reform Act of 1995 (UMRA) (Pub. L. 104–4). In addition, this action does not significantly or uniquely affect small governments or impose a significant intergovernmental mandate, as described in sections 203 and 204 of UMRA. This rule also does not have a substantial direct effect on one or more Indian tribes, on the relationship between the Federal government and Indian tribes, or on the distribution of power and responsibilities between the Federal government and Indian tribes, as specified by Executive Order 13175 (65 FR 67249, November 9, 2000), nor will it have substantial direct effects on the States, on the relationship between the national government and the States, or on the distribution of power and responsibilities among the various levels of government, as specified in Executive Order 13132 (64 FR 43255, August 10, 1999). This rule also is not subject to Executive Order 13045 (62 FR 19885, April 23, 1997), because it is not economically significant. This rule does not involve technical standards; thus the requirements of section 12(d) of the National Technology Transfer and Advancement Act of 1995 (15 U.S.C. 272 note) do not apply. The rule also does not involve special consideration of environmental justice related issues as required by Executive Order 12898 (59 FR 7629, February 16, 1994). In issuing this rule, EPA has taken the necessary steps to eliminate drafting errors and ambiguity, minimize potential litigation, and provide a clear legal standard for affected conduct, as required by section 3 of Executive Order 12988 (61 FR 4729, February 7, 1996). EPA has complied with Executive Order 12630 (53 FR 8859, March 15, 1998) by examining the takings implications of the rule in accordance with the ''Attorney General's Supplemental Guidelines for the Evaluation of Risk and Avoidance of Unanticipated Takings'' issued under the executive order. This rule does not impose an information collection burden under the Paperwork Reduction Act of 1995 (44 U.S.C. 3501 *et seq.*). EPA's compliance with these statutes and Executive Orders for the underlying rules are discussed in previous actions taken on the State's rules.

B. Submission to Congress and the Comptroller General

The Congressional Review Act (5 U.S.C. 801 *et seq.*), as added by the Small Business Regulatory Enforcement Fairness Act of 1996, generally provides that before a rule may take effect, the agency promulgating the rule must submit a rule report, which includes a copy of the rule, to each House of the Congress and to the Comptroller General of the United States. Section 808 allows the issuing agency to make a rule effective sooner than otherwise provided by the CRA if the agency makes a good cause finding that notice and public procedure is impracticable, unnecessary or contrary to the public interest. Today's action simply reformats the codification of provisions which are already in effect as a matter of law. 5 U.S.C. 808(2). As stated previously, EPA has made such a good cause finding, including the reasons therefore, and established an effective date of November 2, 2006. EPA will submit a report containing this rule and other required information to the U.S. Senate, the U.S. House of Representatives, and the Comptroller General of the United States prior to publication of the rule in the **Federal Register**. These corrections to the Identification of plan for Wyoming are not a ''major rule'' as defined by 5 U.S.C. 804(2).

C. Petitions for Judicial Review

EPA has also determined that the provisions of section 307(b)(1) of the Clean Air Act pertaining to petitions for judicial review are not applicable to this action. Prior EPA rulemaking actions for each individual component of the Wyoming SIP compilation had previously afforded interested parties the opportunity to file a petition for judicial review in the United States Court of Appeals for the appropriate circuit within 60 days of such rulemaking action. Thus, EPA sees no need to reopen the 60-day period for filing such petitions for judicial review for this reorganization of the Wyoming ''Identification of plan'' section of 40 CFR 52.2620.

List of Subjects in 40 CFR Part 52

Environmental protection, Air pollution control, Carbon monoxide, Incorporation by reference, Intergovernmental relations, Lead, Nitrogen dioxide, Ozone, Particulate matter, Reporting and recordkeeping requirements, Sulfur oxides, Volatile organic compounds.

Dated: October 20, 2006.

Kerrigan G. Clough,

Acting Regional Administrator, Region 8.

■ Part 52 of chapter I, title 40, Code of Federal Regulations, is amended as follows:

PART 52—[AMENDED]

■ 1. The authority for citation for part 52 continues to read as follows:

Authority: 42 U.S.C. 7401 *et seq.*

Subpart ZZ—Wyoming

■ 2. Section 52.2620 is redesignated as § 52.2635. The section heading and paragraph (a) are revised to read as follows:

§ 52.2635 Original identification of plan section.

(a) This section identifies the original ''Air Implementation Plan for the State of Wyoming'' and all revisions submitted by Wyoming that were federally approved prior to August 31, 2006.

* * * * *

■ 3. A new § 52.2620 is added to read as follows:

§ 52.2620 Identification of plan.

(a) *Purpose and scope.* This section sets forth the applicable State Implementation Plan for Wyoming under section 110 of the Clean Air Act, 42 U.S.C. 7410 and 40 CFR part 51 to meet national ambient air quality standards or other requirements under the Clean Air Act.

(b) *Incorporation by reference.* (1) Material listed in paragraphs (c) and (d) of this section with an EPA approval date prior to August 31, 2006 was approved for incorporation by reference by the Director of the Federal Register in accordance with 5 U.S.C. 552(a) and 1 CFR part 51. Material is incorporated as submitted by the state to EPA, and notice of any change in the material will be published in the **Federal Register**. Entries for paragraphs (c) and (d) of this section with EPA approval dates after August 31, 2006, will be incorporated by reference in the next update to the SIP compilation.

(2) EPA Region 8 certifies that the rules/regulations provided by EPA in

the SIP compilation at the addresses in paragraph (b)(3) of this section are an exact duplicate of the officially promulgated state rules/regulations which have been approved as part of the State Implementation Plan as of August 31, 2006.

(3) Copies of the materials incorporated by reference may be inspected at the Environmental Protection Agency, Region 8, 999 18th Street, Suite 300, Denver, Colorado, 80202–2466; the Air and Radiation Docket and Information Center, EPA West Building, 1301 Constitution Ave., NW., Washington, DC 20460, and the National Archives and Records Administration. For information on the availability of this material at NARA, call 202–741–6030, or go to: *http://www.archives.gov/federal-register/cfr/ibr-locations.html.*

(c) *EPA approved regulations.*

(1) State of Wyoming Regulations

State citation	Title/subject	State adopted and effective date	EPA approval date and citation [1]	Explanations
Chapter 1				
Section 2	Authority	9/13/99, 10/29/99	7/28/04, 69 FR 44965.	
Section 3	Definitions	9/13/99, 10/29/99	7/28/04, 69 FR 44965.	
Section 4	Diluting and concealing emissions	9/13/99, 10/29/99	7/28/04, 69 FR 44965.	
Section 5	Abnormal conditions and equipment	9/13/99, 10/29/99	7/28/04, 69 FR 44965.	
Chapter 2				
Section 2	Ambient standards for particulate matter	9/13/99, 10/29/99	7/28/04, 69 FR 44965.	
Section 3	Ambient standards for nitrogen oxides	9/13/99, 10/29/99	7/28/04, 69 FR 44965.	
Section 4	Ambient standards for sulfur oxides	9/13/99, 10/29/99	7/28/04, 69 FR 44965.	
Section 5	Ambient standards for carbon monoxide	9/13/99, 10/29/00	7/28/04, 69 FR 44965.	
Section 6	Ambient standards for ozone	9/13/99, 10/29/99	7/28/04, 69 FR 44965.	
Section 8	Ambient standards for suspended sulfates	9/13/99, 10/29/99	7/28/04, 69 FR 44965.	
Section 10	Ambient standards for lead	9/13/99, 10/29/99	7/28/04, 69 FR 44965.	
Chapter 3				
Section 2	Emission standards for particulate matter	9/13/99, 10/29/99	7/28/04, 69 FR 44965.	
Section 3	Emission standards for nitrogen oxides	9/13/99, 10/29/99	7/28/04, 69 FR 44965.	
Section 4	Emission standards for sulfur oxides	9/13/99, 10/29/99	7/28/04, 69 FR 44965.	
Section 5	Emission standards for carbon monoxide	9/13/99, 10/29/99	7/28/04, 69 FR 44965.	
Section 6	Emission standards for volatile organic compounds.	9/13/99, 10/29/99	7/28/04, 69 FR 44965.	
Chapter 4				
Section 2	Existing sulfuric acid production units	9/13/99, 10/29/99	7/28/04, 69 FR 44965.	
Section 3	Existing nitric acid manufacturing plants	9/13/99, 10/29/99	7/28/04, 69 FR 44965.	
Chapter 6				
Section 2	Permit requirements for construction, modification, and operation.	9/13/99, 10/29/99	7/28/04, 69 FR 44965.	
Section 4	Prevention of significant deterioration	9/13/99, 10/29/99	7/28/04, 69 FR 44965.	
Chapter 7				
Section 2	Continuous monitoring requirements for existing sources.	9/13/99, 10/29/99	7/28/04, 69 FR 44965.	
Chapter 8				
Section 2	Sweetwater County particulate matter regulations.	9/13/99, 10/29/99	7/28/04, 69 FR 44965.	
Section 3	Conformity of general federal actions to state implementation plans.	9/13/99, 10/29/99	7/28/04, 69 FR 44965.	
Chapter 9				
Section 2	Visibility	9/13/99, 10/29/99	7/28/04, 69 FR 44965.	
Chapter 10				
Section 2	Open burning restrictions	9/13/99, 10/29/99	7/28/04, 69 FR 44965.	
Section 3	Wood waste burners	9/13/99, 10/29/99	7/28/04, 69 FR 44965.	
Chapter 12				
Section 2	Air pollution emergency episodes	9/13/99, 10/29/99	7/28/04, 69 FR 44965.	

State citation	Title/subject	State adopted and effective date	EPA approval date and citation [1]	Explanations
Chapter 13				
Section 2	Motor vehicle pollution control	9/13/99, 10/29/99	7/28/04, 69 FR 44965.	

[1] In order to determine the EPA effective date for a specific provision that is listed in this table, consult the FEDERAL REGISTER cited in this column for that particular provision.

(d) EPA-approved source-specific requirements.

Name of source	Nature of requirement	State submittal and effective date	EPA approval date and citation [2]	Explanations
FMC Corporation	Order containing schedule for compliance, interim requirements, and monitoring and reporting requirements.	1/25/79, 4/25/79	7/2/79, 44 FR 38473.	
Black Hills Power and Light.	Order containing schedule for compliance, interim requirements, and monitoring and reporting requirements.	1/25/79, 4/25/79	7/2/79, 44 FR 38473.	

[2] In order to determine the EPA effective date for a specific provision that is listed in this table, consult the **Federal Register** cited in this column for that particular provision.

(e) EPA-approved nonregulatory provisions.

Name of nonregulatory SIP provision	Applicable geographic or non-attainment area	State submittal date/ adopted date	EPA approval date and citation [3]	Explanations
I. Implementation Plan for the State of Wyoming I. Introduction II. Legal Authority III. Control Strategy IV. Compliance Schedule V. Emergency Plan VI. Air Quality Surveillance VII. Review of New Sources and Modifications VIII. Source Surveillance IX. Resources X. Intergovernmental Cooperation IX. Reports and Revisions Appendices	Statewide	Submitted: 1/28/72, Adopted: 1/22/72, Additional letters submitted on 3/28/72 and 5/3/72.	5/31/72, 37 FR 10842	Excluding: (1) the Wyoming Air Quality Act of 1967 and Wyoming Air Quality Standards and Regulations contained in Appendix E (more recent versions of these documents have been approved in the SIP); (2) Section III, paragraph following table I and Section IV, paragraph G (revisions to these paragraphs have subsequently been approved). (See II below.)
II. Revisions to Sections III (paragraph following Table I and IV (paragraph G) of the SIP	Statewide	Submitted: 5/29/73	7/3/74, 39 FR 24504.	
III. Inclusion of the Wyoming Environmental Quality Act, 1973, with amendments incorporated by the 1975 Wyoming State Legislature	Statewide	Submitted: 2/19/76	8/31/76, 41 FR 36652.	
IV. Revisions to Implementation Plan for Air Quality Control Plan State of Wyoming: addition of sections for Implementation Plan Reviews: Added to Air Quality Surveillance Chapter—Public Notification of Air Quality; and added to Intergovernmental Cooperation Chapter—Consultation	Statewide	Submitted: 1/25/79	7/2/79, 44 FR 38473.	
V. SIP for Total Suspended Particulate (TSP) Trona Area of Sweetwater County nonattainment area	Trona area of Sweetwater County.	Submitted: 1/25/79	7/2/79, 44 FR 38473	SIP also contained source specific regulations that are now in Chapter 8, Section 2.

Name of nonregulatory SIP provision	Applicable geographic or non-attainment area	State submittal date/ adopted date	EPA approval date and citation [3]	Explanations
VI. Revision to Implementation Plan for Air Quality Control Plan State of Wyoming: Addition of section to Control Strategy Chapter for Implementation Plan Reviews	Statewide	4/30/91	4/19/83, 48 FR 16682.	
VII. SIP to meet Air Quality Monitoring 40 CFR part 58	Statewide	Submitted: 8/26/81	2/9/82, 47 FR 5892.	
VIII. Emergency Episode Contingency Plan	Statewide	Submitted: 8/26/81	2/9/82, 47 FR 5892.	
IX. Implementation Plan for Lead	Statewide	Submitted: 8/30/84	10/11/84, 49 FR 39843.	
X. Implementation Plan for Class I Visibility Protection	Statewide	Submitted: 9/6/88	2/15/89, 54 FR 6912.	
XI. Commitment to conduct stack height evaluations in accordance with the "Guideline for Determination of Good Engineering Practice Stack Height (Technical Support Document for the Stack Height Regulations)," EPA 450/4–80–023R, June, 1985.	Statewide	Submitted: 12/9/88	3/17/89, 54 FR 11186.	
XII. Stack Height Demonstration Analyses	Statewide	Submitted: 8/5/86	6/7/89, 54 FR 24334.	
XIII. Implementation Plan on Air Quality Surveillance for Inhalable Particulate Matter (PM10)	Statewide	Submitted: 3/14/89, Adopted: 12/13/88.	7/10/89 55 FR 28197.	
XIV. NO_X Increment Implementation	Statewide	Submitted: 11/20/90	5/24/91, 56 FR 23811.	
XV. Small Business Program	Statewide	Submitted: 11/1/93	6/20/94, 59 FR 31548.	
XVI. Implementation Plan for PM–10 Control Strategies Sheridan, Wyoming (includes City of Sheridan—Air Quality Maintenance Plan)	Sheridan	Submitted: 8/28/89, Adopted: 7/17/89.	6/23/94, 59 FR 32360	Approval does not include sections 2 and 3, Voluntary Curtailment of Solid Fuel Combustion and Industrial Sources.
XVII. Memorandum of Agreement on Procedures for Protecting PM10 NAAQS in the Powder River Basin	Powder River Basin	Signed: 12/22/93	9/12/95, 60 FR 47290.	

[3] In order to determine the EPA effective date for a specific provision that is listed in this table, consult the **Federal Register** cited in this column for that particular provision.

[FR Doc. E6–18423 Filed 11–1–06, 8:45 am]
BILLING CODE 6560–50–P

ENVIRONMENTAL PROTECTION AGENCY

40 CFR Part 52

[EPA–R08–OAR–2005–CO–0002; FRL–8232–2]

Clean Air Act Approval and Promulgation of Air Quality Implementation Plan Revision for Colorado; Long-Term Strategy of State Implementation Plan for Class I Visibility Protection

AGENCY: Environmental Protection Agency (EPA).

ACTION: Final rule.

SUMMARY: On January 24, 2006, EPA published a proposed approval of a revision updating the Long-Term Strategy of the State Implementation Plan (SIP) for Class I Visibility Protection, which was submitted by the Governor of Colorado with a letter dated March 24, 2005. In a February 13, 2006, letter EPA received adverse comments on our proposed approval from Rocky Mountain Clean Air Action. In this final rulemaking, we address the adverse comments received and finalize our approval.

DATES: *Effective Date:* This rule is effective on December 4, 2006.

ADDRESSES: EPA has established a docket for this action under Docket ID No. R08–OAR–2005–CO–0002. All documents in the docket are listed on the *www.regulations.gov* Web site. Publicly available docket materials are available either electronically through *www.regulations.gov* or in hard copy at the Air and Radiation Program, Environmental Protection Agency (EPA), Region 8, 999 18th Street, Suite 200, Denver, Colorado 80202–2466. EPA requests that if at all possible, you contact the individual listed in the **FOR FURTHER INFORMATION CONTACT** section to view the hard copy of the docket. You may view the hard copy of the docket Monday through Friday, 8 a.m. to 4 p.m., excluding Federal holidays.

FOR FURTHER INFORMATION CONTACT: Amy Platt, Environmental Protection Agency, Region 8, (303) 312–6449, *platt.amy@epa.gov.*

SUPPLEMENTARY INFORMATION:

Table of Contents

I. Background
II. March 24, 2005 Submittal
III. Response to Comments
IV. Section 110(l)
V. Final Action
VI. Statutory and Executive Order Reviews

Definitions

For the purpose of this document, we are giving meaning to certain words or initials as follows:

(i) The word *Act* or initials *CAA* mean the Clean Air Act, unless the context indicates otherwise.

(ii) The word *we* or initials *EPA* mean the United States Environmental Protection Agency.

(iii) The initials *SIP* mean State Implementation Plan.

(iv) The word *State* or initials *CO* mean the State of Colorado, unless the context indicates otherwise.

(v) The initials *FLM* mean Federal Land Manager.

I. Background

Section 169A of the Clean Air Act (CAA),[1] 42 U.S.C. 7491, establishes as a National goal the prevention of any future, and the remedying of any existing, anthropogenic visibility impairment in mandatory Class I Federal areas[2] (referred to herein as the ''National goal'' or ''National visibility goal''). Section 169A called for EPA to, among other things, issue regulations to assure reasonable progress toward meeting the National visibility goal, including requiring each State with a mandatory Class I Federal area to revise its SIP to contain such emission limits, schedules of compliance and other measures as may be necessary to make reasonable progress toward meeting the National goal (*see* CAA section 169A(b)(2)). Section 110(a)(2)(J) of the CAA, 42 U.S.C. 7410(a)(2)(J), similarly requires SIPs to meet the visibility protection requirements of the CAA.

We promulgated regulations that required affected States to, among other things, (1) coordinate development of SIPs with appropriate FLMs; (2) develop a program to assess and remedy visibility impairment from new and existing sources; and (3) develop a long-term (10–15 years) strategy to assure reasonable progress toward the National visibility goal. See 45 FR 80084, December 2, 1980 (codified at 40 CFR 51.300–51.307). The regulations provide for the remedying of visibility impairment that is reasonably attributable to a single existing stationary facility or small group of existing stationary facilities. These regulations require that the SIPs provide for periodic review, and revision as appropriate, of the Long-Term Strategy not less frequently than every three years, that the review process include consultation with the appropriate FLMs, and that the State provide a report to the public and EPA that includes an assessment of the State's progress toward the National visibility goal. See 40 CFR 51.306(c).

On July 12, 1985 (50 FR 28544) and November 24, 1987 (52 FR 45132), we disapproved the SIPs of states, including Colorado, that failed to comply with the requirements of the provisions of 40 CFR 51.302 (visibility general plan requirements), 51.305 (visibility monitoring), and 51.306 (visibility long-term strategy). We also incorporated corresponding Federal plans and regulations into the SIPs of these states pursuant to section 110(c)(1) of the CAA, 42 U.S.C. 7410(c)(1).

The Governor of Colorado submitted a SIP revision for visibility protection on December 21, 1987, which met the criteria of 40 CFR 51.302, 51.305, and 51.306 for general plan requirements, monitoring strategy, and long-term strategies. We approved this SIP revision in the August 12, 1988 **Federal Register** (53 FR 30428), and this revision replaced the Federal plans and regulations in the Colorado Visibility SIP. The Governor of Colorado submitted a subsequent SIP revision for visibility protection with a letter dated November 18, 1992, which we approved on October 11, 1994 (59 FR 51376).

After Colorado's 1992 Long-Term Strategy review, the U.S. Forest Service (USFS) certified visibility impairment at Mt. Zirkel Wilderness Area (MZWA) and named the Hayden and Craig generating stations in the Yampa Valley of Northwest Colorado as suspected sources. The USFS is the FLM for MZWA. This certification was issued on July 14, 1993. Emissions from the Hayden Station were addressed in the State's August 23, 1996 Long-Term Strategy review and revision (*see* 62 FR 2305, January 16, 1997). Emissions from the Craig Generating Station were addressed in the State's April 19, 2001 Long-Term Strategy review and revision (*see* 66 FR 35374, July 5, 2001).

The State conducted its next complete periodic review and revision of the long-term strategy in 2002. With an April 12, 2004, letter, the Governor of Colorado submitted that revision to the Long-Term Strategy of Colorado's SIP for Class I Visibility Protection, which we approved on August 1, 2005 (70 FR 44052).

II. March 24, 2005 Submittal

With a March 24, 2005 letter, the Governor of Colorado submitted a revision to the Long-Term Strategy of Colorado's SIP for Class I Visibility Protection, contained in Part II of the November 18, 2004 document entitled ''Long-Term Strategy Review and Revision of Colorado's State Implementation Plan for Class I Visibility Protection.'' This revision was made to fulfill the requirements to periodically review and, as appropriate, revise the Long-Term Strategy.

The SIP revision is contained in Part II of the November 18, 2004 document entitled ''Long-Term Strategy Review and Revision of Colorado's State Implementation Plan for Class I Visibility Protection.'' Part II, ''Revision of the Long-Term Strategy,'' incorporates by reference requirements for the Hayden and Craig Generating Stations, including emissions limits and schedules of compliance, as previously approved by EPA on January 16, 1997 (*see* 62 FR 2305) and July 5, 2001 (*see* 66 FR 35374). Part II also contains explanatory provisions and analyses that are required by section 169A of the CAA, Federal visibility regulations (40 CFR 51.300 to 51.307), and/or the Colorado Visibility SIP. These requirements address existing impairment, ongoing air pollution programs, smoke management practices, prevention of future impairment, and FLM consultation and communication.

We reviewed the SIP revision and determined it adequately demonstrates that the State is making reasonable progress toward the National visibility goal as required by 40 CFR 51.306. Therefore, on January 24, 2006 (71 FR 3796), EPA proposed approval of this SIP revision.

In addition, Appendix B of Part II of the November 18, 2004 document entitled ''Long-Term Strategy Review and Revision of Colorado's State Implementation Plan for Class I Visibility Protection,'' contains an update of Section XIV, Visibility, of Part D of the Colorado Air Quality Control Commission Regulation No. 3 (Stationary Source Permitting and Air Pollutant Emission Notice Requirements). Although this section has not changed substantively since it was last incorporated into the Visibility SIP (*see* 53 FR 30431, August 12, 1988, and 59 FR 51379, October 11, 1994), it has been recodified. Therefore, on January 24, 2006 (71 FR 3796) for clarification purposes, we also proposed approval of this recodified version of the State's visibility regulations in order to update the version incorporated into the Visibility SIP.

III. Response to Comments

Comment: In a letter dated February 13, 2006, Rocky Mountain Clean Air Action (RMCAA) submitted adverse comments on our proposed approval. Specifically, RMCAA commented that the SIP revision cannot be approved because of an existing provision in the Colorado SIP related to upsets at stationary sources. In RMCAA's view, the ''broad exception to air quality standards and limitations'' contained in Colorado's upset provision interferes with applicable requirements concerning attainment and reasonable further progress towards attainment of

[1] The Clean Air Act is codified, as amended, in the U.S. Code at 42 U.S.C. 7401, *et seq.*

[2] Mandatory class I Federal areas include international parks, national wilderness areas, and national memorial parks greater than five thousand acres in size, and national parks greater than six thousand acres in size, as described in section 162(a) of the Act (42 U.S.C. 7472(a)). Each mandatory Class I Federal area is the responsibility of a ''Federal land manager'' (FLM), the Secretary of the department with authority over such lands. See section 302(i) of the Act, 42 U.S.C. 7602(i).

the National Ambient Air Quality Standards (NAAQS) and other applicable requirements of the Act, including the visibility goals under Section 169A. Although the comments address an existing SIP provision that the State did not submit as part of its Visibility SIP revision, the commenter does not believe that EPA can approve the State's Visibility SIP revision until the existing provision is eliminated or revised.

EPA's Response: Colorado's upset rule is located in the Colorado Common Provisions Regulation, Section II.E., Upset Conditions and Breakdowns. EPA approved the upset rule on May 31, 1972 (*see* 37 FR 10842). As noted above, the State did not submit any revisions to its upset rule with the Visibility SIP revision we are approving today. Therefore, we are not acting on the upset rule in this action, and our approval of the Visibility SIP revision will not change Colorado's upset rule or its effect on the implementation and enforcement of the Colorado SIP. Also, our approval of the Visibility SIP revision will not interfere with attainment, reasonable further progress, or any other requirement of the Clean Air Act. Colorado's Visibility SIP revision meets the requirements of our visibility regulations. Thus, our approval is appropriate.

IV. Section 110(l)

Section 110(l) of the Clean Air Act states that a SIP revision cannot be approved if the revision would interfere with any applicable requirement concerning attainment and reasonable further progress towards attainment of the National Ambient Air Quality Standards (NAAQS) or any other applicable requirements of the Act. The Colorado SIP revisions that are the subject of this document are consistent with Federal requirements and rules. These revisions were made to demonstrate reasonable further progress toward the National visibility goal, as required by the Act. They do not interfere with the attainment or maintenance of the NAAQS or other applicable requirements of the Act

V. Final Action

We have reviewed the adequacy of the State's revision to the Long-Term Strategy of Colorado's SIP for Class I Visibility Protection, contained in Part II of the November 18, 2004 document entitled ''Long-Term Strategy Review and Revision of Colorado's State Implementation Plan for Class I Visibility Protection,'' as submitted by the Governor with a letter dated March 24, 2005. We are approving the revision as demonstrating reasonable further progress toward the National visibility goal as required by 40 CFR 51.306.

This rule will be effective December 4, 2006 without further notice.

VI. Statutory and Executive Order Reviews

Under Executive Order 12866 (58 FR 51735, October 4, 1993), this action is not a ''significant regulatory action'' and therefore is not subject to review by the Office of Management and Budget. For this reason, this action is also not subject to Executive Order 13211, ''Actions Concerning Regulations That Significantly Affect Energy Supply, Distribution, or Use'' (66 FR 28355, May 22, 2001). This action merely approves state law as meeting Federal requirements and imposes no additional requirements beyond those imposed by state law. Accordingly, the Administrator certifies that this rule will not have a significant economic impact on a substantial number of small entities under the Regulatory Flexibility Act (5 U.S.C. 601 *et seq.*). Because this rule approves pre-existing requirements under state law and does not impose any additional enforceable duty beyond that required by state law, it does not contain any unfunded mandate or significantly or uniquely affect small governments, as described in the Unfunded Mandates Reform Act of 1995 (Pub. L. 104–4).

This rule also does not have tribal implications because it will not have a substantial direct effect on one or more Indian tribes, on the relationship between the Federal Government and Indian tribes, or on the distribution of power and responsibilities between the Federal Government and Indian tribes, as specified by Executive Order 13175 (65 FR 67249, November 9, 2000). This action also does not have federalism implications because it does not have substantial direct effects on the States, on the relationship between the national government and the States, or on the distribution of power and responsibilities among the various levels of government, as specified in Executive Order 13132 (64 FR 43255, August 10, 1999). This action merely approves a state rule implementing a Federal standard, and does not alter the relationship or the distribution of power and responsibilities established in the Clean Air Act. This rule also is not subject to Executive Order 13045 ''Protection of Children from Environmental Health Risks and Safety Risks'' (62 FR 19885, April 23, 1997), because it is not economically significant.

In reviewing SIP submissions, EPA's role is to approve state choices, provided that they meet the criteria of the Clean Air Act. In this context, in the absence of a prior existing requirement for the State to use voluntary consensus standards (VCS), EPA has no authority to disapprove a SIP submission for failure to use VCS. It would thus be inconsistent with applicable law for EPA, when it reviews a SIP submission, to use VCS in place of a SIP submission that otherwise satisfies the provisions of the Clean Air Act. Thus, the requirements of section 12(d) of the National Technology Transfer and Advancement Act of 1995 (15 U.S.C. 272 note) do not apply. This rule does not impose an information collection burden under the provisions of the Paperwork Reduction Act of 1995 (44 U.S.C. 3501 *et seq.*).

The Congressional Review Act, 5 U.S.C. 801 *et seq.*, as added by the Small Business Regulatory Enforcement Fairness Act of 1996, generally provides that before a rule may take effect, the agency promulgating the rule must submit a rule report, which includes a copy of the rule, to each House of the Congress and to the Comptroller General of the United States. EPA will submit a report containing this rule and other required information to the U.S. Senate, the U.S. House of Representatives, and the Comptroller General of the United States prior to publication of the rule in the **Federal Register**. A major rule cannot take effect until 60 days after it is published in the **Federal Register**. This action is not a ''major rule'' as defined by 5 U.S.C. 804(2).

Under section 307(b)(1) of the Clean Air Act, petitions for judicial review of this action must be filed in the United States Court of Appeals for the appropriate circuit by December 4, 2006. Filing a petition for reconsideration by the Administrator of this final rule does not affect the finality of this rule for the purposes of judicial review nor does it extend the time within which a petition for judicial review may be filed, and shall not postpone the effectiveness of such rule or action. This action may not be challenged later in proceedings to enforce its requirements. See section 307(b)(2).

List of Subjects in 40 CFR Part 52

Environmental protection, Air pollution control, Carbon monoxide, Incorporation by reference, Intergovernmental relations, Nitrogen dioxide, Ozone, Particulate matter, Reporting and recordkeeping requirements, Sulfur oxides.

Dated: October 3, 2006.

Kerrigan G. Clough,

Acting Regional Administrator, Region 8.

■ 40 CFR part 52 is amended to read as follows:

PART 52—[AMENDED]

■ 1. The authority citation for part 52 continues to read as follows:

Authority: 42 U.S.C. 7401 *et seq.*

Subpart G—Colorado

■ 2. Section 52.320 is amended by adding paragraph (c)(108) to read as follows:

§ 52.320 Identification of plan.

* * * * *

(c) * * *

(108) Revisions to the Long-Term Strategy of Colorado's State Implementation Plan for Class I Visibility Protection (Visibility SIP), as submitted by the Governor on March 24, 2005. The revisions update strategies, activities, and monitoring plans that constitute reasonable progress toward the National visibility goal.

(i) *Incorporation by reference.* (A) ''Revision of the Long-Term Strategy,'' Part II of the November 18, 2004 document entitled ''Long-Term Strategy Review and Revision of Colorado's State Implementation Plan for Class I Visibility Protection,'' effective November 18, 2004.

(B) Colorado Air Quality Control Commission Regulation No. 3, ''Stationary Source Permitting and Air Pollutant Emission Notice Requirements,'' 5 CCR 1001–5, Part D, Section XIV, Visibility, Subsections A through F, effective April 16, 2004.

* * * * *

[FR Doc. E6–18416 Filed 11–1–06; 8:45 am]

BILLING CODE 6560–50–P

ENVIRONMENTAL PROTECTION AGENCY

40 CFR Part 52

[EPA–R03–OAR–2006–0528; FRL–8236–6]

Approval and Promulgation of Air Quality Implementation Plans; West Virginia; Amendments to Nonattainment New Source Review (NSR) Air Quality Permit Program

AGENCY: Environmental Protection Agency (EPA).

ACTION: Final rule.

SUMMARY: EPA is approving a State Implementation Plan (SIP) revision submitted by the State of West Virginia. This revision consists of amendments to West Virginia's existing Nonattainment New Source Review (NSR) preconstruction air quality permit program regulation. The intended effect of this action is to approve a State Implementation Plan (SIP) revision submitted by West Virginia Department of Environmental Quality.

DATES: *Effective Date:* This final rule is effective on December 4, 2006.

ADDRESSES: EPA has established a docket for this action under Docket ID Number EPA–R03–OAR–2006–0528. All documents in the docket are listed in the *www.regulations.gov* Web site. Although listed in the electronic docket, some information is not publicly available, i.e., confidential business information (CBI) or other information whose disclosure is restricted by statute. Certain other material, such as copyrighted material, is not placed on the Internet and will be publicly available only in hard copy form. Publicly available docket materials are available either electronically through *www.regulations.gov* or in hard copy for public inspection during normal business hours at the Air Protection Division, U.S. Environmental Protection Agency, Region III, 1650 Arch Street, Philadelphia, Pennsylvania 19103. Copies of the State submittal are available at the West Virginia Department of Environmental Protection, Division of Air Quality, 601 57th Street, SE., Charleston, WV 25304.

FOR FURTHER INFORMATION CONTACT: Rosemarie Nino, (215) 814–3377, or by e-mail at *nino.rose@epa.gov.*

SUPPLEMENTARY INFORMATION:

I. Background

On August 9, 2006 (71 FR 45482), EPA published a notice of proposed rulemaking (NPR) for the State of West Virginia. The NPR proposed approval of amendments to West Virginia's nonattainment new source review (NSR) air quality permit program. The formal SIP revision was submitted by West Virginia Department of Environmental Protection (WVDEP) on December 1, 2005. On December 22, 2005, WVDEP provided supplemental materials consisting of a letter and an attached one page table requesting that EPA exclude from its December 1, 2005 request for SIP approval the provisions of 45 CSR 19, as set forth in the attached table, that pertain to ''Clean Unit'' and ''Pollution Control Project'' in order to ensure that their federally-approved regulations are consistent with the United States Court of Appeals for the District of Columbia Circuit's June 24, 2005 ruling in *New York* v. *EPA*, 413 F.3d 3 (D.C. Cir . 2005). In a separate action, EPA will act on changes made by West Virginia to its prevention of significant deterioration (PSD) construction permit program, also submitted on December 1, 2005.

The Clean Air Act requires that all states including the District of Columbia to submit revisions to their State Implementation Plans that requires State and local permitting agencies to adopt and submit revisions to their part 51 permitting programs, implementing the minimum program elements of the December 31, 2002 ''NSR Reform'' rulemaking no later than January 2, 2006 (67 FR 80240). West Virginia amended its regulation to satisfy this requirement.

II. Summary of SIP Revision

West Virginia amended its regulation (45 CSR 19) to meet the minimum requirements of 40 CFR 51.165 and the Clean Air Act. This approval action will effectively replace the previously approved version of 45 CSR 19 as approved in WV SIP on July 2, 1985 (50 FR 27247).

Other specific requirements of West Virginia's existing Nonattainment New Source Review (NSR) preconstruction air quality permit program as 45 CSR 19 and the rationale for EPA's proposed action are explained in the NPR and will not be restated here. No public comments were received on the NPR.

III. Final Action

EPA is approving West Virginia's Nonattainment New Source Review (NSR) preconstruction air quality permit program regulation (45 CSR 19) as a revision to the West Virginia SIP.

IV. Statutory and Executive Order Reviews

A. General Requirements

Under Executive Order 12866 (58 FR 51735, October 4, 1993), this action is not a ''significant regulatory action'' and therefore is not subject to review by the Office of Management and Budget. For this reason, this action is also not subject to Executive Order 13211, ''Actions Concerning Regulations That Significantly Affect Energy Supply, Distribution, or Use'' (66 FR 28355, May 22, 2001). This action merely approves state law as meeting Federal requirements and imposes no additional requirements beyond those imposed by state law. Accordingly, the Administrator certifies that this rule will not have a significant economic impact on a substantial number of small entities under the Regulatory Flexibility Act (5 U.S.C. 601 *et seq.*). Because this

rule approves pre-existing requirements under state law and does not impose any additional enforceable duty beyond that required by state law, it does not contain any unfunded mandate or significantly or uniquely affect small governments, as described in the Unfunded Mandates Reform Act of 1995 (Pub. L. 104–4). This rule also does not have tribal implications because it will not have a substantial direct effect on one or more Indian tribes, on the relationship between the Federal Government and Indian tribes, or on the distribution of power and responsibilities between the Federal Government and Indian tribes, as specified by Executive Order 13175 (65 FR 67249, November 9, 2000). This action also does not have Federalism implications because it does not have substantial direct effects on the States, on the relationship between the national government and the States, or on the distribution of power and responsibilities among the various levels of government, as specified in Executive Order 13132 (64 FR 43255, August 10, 1999). This action merely approves a state rule implementing a Federal requirement, and does not alter the relationship or the distribution of power and responsibilities established in the Clean Air Act.

This rule also is not subject to Executive Order 13045 ''Protection of Children from Environmental Health Risks and Safety Risks'' (62 FR 19885, April 23, 1997), because it is not economically significant.

In reviewing SIP submissions, EPA's role is to approve state choices, provided that they meet the criteria of the Clean Air Act. In this context, in the absence of a prior existing requirement for the State to use voluntary consensus standards (VCS), EPA has no authority to disapprove a SIP submission for failure to use VCS. It would thus be inconsistent with applicable law for EPA, when it reviews a SIP submission, to use VCS in place of a SIP submission that otherwise satisfies the provisions of the Clean Air Act. Thus, the requirements of section 12(d) of the National Technology Transfer and Advancement Act of 1995 (15 U.S.C. 272 note) do not apply. This rule does not impose an information collection burden under the provisions of the Paperwork Reduction Act of 1995 (44 U.S.C. 3501 *et seq.*).

B. Submission to Congress and the Comptroller General

The Congressional Review Act, 5 U.S.C. 801 *et seq.*, as added by the Small Business Regulatory Enforcement Fairness Act of 1996, generally provides that before a rule may take effect, the agency promulgating the rule must submit a rule report, which includes a copy of the rule, to each House of the Congress and to the Comptroller General of the United States. EPA will submit a report containing this rule and other required information to the U.S. Senate, the U.S. House of Representatives, and the Comptroller General of the United States prior to publication of the rule in the **Federal Register**. This rule is not a ''major rule'' as defined by 5 U.S.C. 804(2).

C. Petitions for Judicial Review

Under section 307(b)(1) of the Clean Air Act, petitions for judicial review of this action must be filed in the United States Court of Appeals for the appropriate circuit by January 2, 2007. Filing a petition for reconsideration by the Administrator of this final rule does not affect the finality of this rule for the purposes of judicial review nor does it extend the time within which a petition for judicial review may be filed, and shall not postpone the effectiveness of such rule or action. This action may not be challenged later in proceedings to enforce its requirements. (See section 307(b)(2).) This final rule approves West Virginia's Nonattainment New Source Review (NSR) Permit Program.

List of Subjects in 40 CFR Part 52

Environmental protection, Air pollution control, Carbon monoxide, Intergovernmental relations, Nitrogen dioxide, Ozone, Particulate matter, Reporting and recordkeeping requirements, Sulfur oxides, Volatile organic compounds.

Dated: October 16, 2006.

William T. Wisniewski,

Acting Regional Administrator, Region III.

■ 40 CFR part 52 is amended as follows:

PART 52—[AMENDED]

■ 1. The authority citation for 40 CFR part 52 continues to read as follows:

Authority: 42 U.S.C. 7401 *et seq.*

Subpart XX—West Virginia

■ 2. In § 52.2520, the table in paragraph (c) is amended by removing the entry for (Ch. 16–20) Series XIX and replacing it with an entry for 45 CSR 19 to read as follows:

§ 52.2520 Identification of plan.

* * * * *

(c) * * *

EPA-APPROVED REGULATIONS IN THE WEST VIRGINIA SIP

State citation [Chapter 16–20 or 45 CSR]	Title/subject	State effective date	EPA approval date	Additional explanation/citation at 40 CFR 52.2565
*	*	*	*	*
45 CSR 19	Permits for Construction and Major Modification of Major Stationary Sources of Air Pollution Which Cause or Contribute to Nonattainment			
Section 45–19–1	General	6/2/05	11/2/06 [*Insert page number where the document begins*].	
Section 45–19–2	Definitions	6/2/05	11/2/06 [*Insert page number where the document begins*].	
Section 45–19–3	Applicability	6/2/05	11/2/06 [*Insert page number where the document begins*].	
Section 45–19–4	Conditions for a Permit Approval for Proposed Major Sources that Would Contribute to a Violation of NAAQS.	6/2/05	11/2/06 [*Insert page number where the document begins*].	

EPA-APPROVED REGULATIONS IN THE WEST VIRGINIA SIP—Continued

State citation [Chapter 16–20 or 45 CSR]	Title/subject	State effective date	EPA approval date	Additional explanation/citation at 40 CFR 52.2565
Section 45–19–5	Conditions for Permit Approval for Sources Locating In Attainment or Unclassifiable Areas that Would Cause a New Violation of a NAAQS.	6/2/05	11/2/06 [*Insert page number where the document begins*].	
Section 45–19–7	Baseline for Determining Credit for Emission Offsets.	6/2/05	11/2/06 [*Insert page number where the document begins*].	
Section 45–19–8	Location of Emissions Offsets	6/2/05	11/2/06 [*Insert page number where the document begins*].	
Section 45–19–9	Administrative Procedures for Emission Offset Proposals.	6/2/05	11/2/06 [*Insert page number where the document begins*].	
Section 45–19–12	Reasonable Further Progress	6/2/05	11/2/06 [*Insert page number where the document begins*].	
Section 45–19–13	Source Impact Analysis	6/2/05	11/2/06 [*Insert page number where the document begins*].	
Section 45–19–14	Permit Requirements for Major Stationary Sources and Major Modifications.	6/2/05	11/2/06 [*Insert page number where the document begins*].	
Section 45–19–15	Public Review Procedures	6/2/05	11/2/06 [*Insert page number where the document begins*].	
Section 45–19–16	Public Meetings	6/2/05	11/2/06 [*Insert page number where the document begins*].	
Section 45–19–17	Permit Transfer, Cancellation and Responsibility	6/2/05	11/2/06 [*Insert page number where the document begins*].	
Section 45–19–18	Disposition of Permits	6/2/05	11/2/06 [*Insert page number where the document begins*].	
Section 45–19–19	Requirements for Air Quality Models	6/2/05	11/2/06 [*Insert page number where the document begins*].	
Section 45–19–23	Actual PAL	6/2/05	11/2/06 [*Insert page number where the document begins*].	
Section 45–19–24	Conflict with Other Permitting Rules	6/2/05	11/2/06 [*Insert page number where the document begins*].	
Section 45–19–25	Inconsistency Between Rules	6/2/05	11/2/06 [*Insert page number where the document begins*].	
*	*	*	*	*

* * * * *

[FR Doc. E6–18277 Filed 11–1–06; 8:45 am]

BILLING CODE 6560–50–P

ENVIRONMENTAL PROTECTION AGENCY

40 CFR Part 52

[EPA–R03–OAR–2006–0527; FRL–8236–5]

Approval and Promulgation of Air Quality Implementation Plans; West Virginia; Amendments to Prevention of Significant Deterioration (PSD) Air Quality Permit Program

AGENCY: Environmental Protection Agency (EPA).

ACTION: Final rule.

SUMMARY: EPA is approving a State Implementation Plan (SIP) revision submitted by the State of West Virginia. This revision establishes amendments to the State's prevention of significant deterioration (PSD) preconstruction air quality permit program regulation. The intended effect of this action is the approval of a State Implementation Plan (SIP) revisions submitted by West Virginia Department of Environmental Protection.

DATES: *Effective Date:* This final rule is effective on December 4, 2006.

ADDRESSES: EPA has established a docket for this action under Docket ID

Number EPA–R03–OAR–2006–0527. All documents in the docket are listed in the *www.regulations.gov* Web site. Although listed in the electronic docket, some information is not publicly available, *i.e.*, confidential business information (CBI) or other information whose disclosure is restricted by statute. Certain other material, such as copyrighted material, is not placed on the Internet and will be publicly available only in hard copy form. Publicly available docket materials are available either electronically through *www.regulations.gov* or in hard copy for public inspection during normal business hours at the Air Protection Division, U.S. Environmental Protection Agency, Region III, and 1650 Arch Street, Philadelphia, Pennsylvania 19103. Copies of the State submittal is available at the West Virginia Department of Environmental Protection, Division of Air Quality, 601 57th Street SE., Charleston, WV 25304.

FOR FURTHER INFORMATION CONTACT: Rosemarie Nino, (215) 814–3377, or by e-mail at *nino.rose@epa.gov.*

SUPPLEMENTARY INFORMATION:

I. Background

On August 9, 2006 (71 FR 45485), EPA published a notice of proposed rulemaking (NPR) for the State of West Virginia. The NPR proposed approval of amendments to West Virginia's prevention of significant deterioration (PSD) preconstruction air quality permit program. The formal SIP revision was submitted by West Virginia on December 1, 2005. On December 22, 2005, WVDEP provided supplemental materials consisting of a letter and an attached one page table requesting that EPA exclude from its December 1, 2005 request for SIP approval the provisions of 45 CSR 14, as set forth in the attached table, that pertain to ''Clean Unit'' and ''Pollution Control Project'' in order to ensure that their federally-approved regulations are consistent with the United States Court of Appeals for the District of Columbia Circuit's June 24, 2005 ruling in New York v. EPA, 413 F.3d 3 (D.C. Cir 2005). In a separate action, EPA will act on changes made by West Virginia to its nonattainment new source review (NSR) permit program, also submitted on December 1, 2005.

The Clean Air Act requires that all states including the District of Columbia to submit revisions to their State Implementation Plans that requires State and local permitting agencies to adopt and submit revision to their part 51 permitting programs, implementing the minimum program elements of the December 31, 2002 ''NSR Reform'' rulemaking no later then January 2, 2006 (67 FR 80240). West Virginia amended its regulation to satisfy this requirement.

II. Summary of SIP Revision

West Virginia amended its regulation (45 CSR 14) to meet the minimum requirements of 40 CFR 51.166 and the Clean Air Act. This approval action will effectively replace the previous-approved version of 45 CSR 14 as approved in the West Virginia SIP on October 22, 1996 (61 FR 54735).

Other specific requirements of West Virginia's existing prevention of significant deterioration (PSD) construction permit program as 45 CSR 14 and the rationale for EPA's proposed action are explained in the NPR and will not be restated here. No public comments were received on the NPR.

III. Final Action

EPA is approving amendments to the State's prevention of significant deterioration (PSD) preconstruction air quality permit program regulations as a revision to the West Virginia SIP.

IV. Statutory and Executive Order Reviews

A. General Requirements

Under Executive Order 12866 (58 FR 51735, October 4, 1993), this action is not a ''significant regulatory action'' and therefore is not subject to review by the Office of Management and Budget. For this reason, this action is also not subject to Executive Order 13211, ''Actions Concerning Regulations That Significantly Affect Energy Supply, Distribution, or Use'' (66 FR 28355, May 22, 2001). This action merely approves state law as meeting Federal requirements and imposes no additional requirements beyond those imposed by state law. Accordingly, the Administrator certifies that this rule will not have a significant economic impact on a substantial number of small entities under the Regulatory Flexibility Act (5 U.S.C. 601 *et seq.*). Because this rule approves pre-existing requirements under state law and does not impose any additional enforceable duty beyond that required by state law, it does not contain any unfunded mandate or significantly or uniquely affect small governments, as described in the Unfunded Mandates Reform Act of 1995 (Pub. L. 104–4). This rule also does not have tribal implications because it will not have a substantial direct effect on one or more Indian tribes, on the relationship between the Federal Government and Indian tribes, or on the distribution of power and responsibilities between the Federal Government and Indian tribes, as specified by Executive Order 13175 (65 FR 67249, November 9, 2000). This action also does not have Federalism implications because it does not have substantial direct effects on the States, on the relationship between the national government and the States, or on the distribution of power and responsibilities among the various levels of government, as specified in Executive Order 13132 (64 FR 43255, August 10, 1999). This action merely approves a state rule implementing a Federal requirement, and does not alter the relationship or the distribution of power and responsibilities established in the Clean Air Act. This rule also is not subject to Executive Order 13045 ''Protection of Children from Environmental Health Risks and Safety Risks'' (62 FR 19885, April 23, 1997), because it is not economically significant.

In reviewing SIP submissions, EPA's role is to approve state choices, provided that they meet the criteria of the Clean Air Act. In this context, in the absence of a prior existing requirement for the State to use voluntary consensus standards (VCS), EPA has no authority to disapprove a SIP submission for failure to use VCS. It would thus be inconsistent with applicable law for EPA, when it reviews a SIP submission, to use VCS in place of a SIP submission that otherwise satisfies the provisions of the Clean Air Act. Thus, the requirements of section 12(d) of the National Technology Transfer and Advancement Act of 1995 (15 U.S.C. 272 note) do not apply. This rule does not impose an information collection burden under the provisions of the Paperwork Reduction Act of 1995 (44 U.S.C. 3501 *et seq.*).

B. Submission to Congress and the Comptroller General

The Congressional Review Act, 5 U.S.C. 801 *et seq.*, as added by the Small Business Regulatory Enforcement Fairness Act of 1996, generally provides that before a rule may take effect, the agency promulgating the rule must submit a rule report, which includes a copy of the rule, to each House of the Congress and to the Comptroller General of the United States. EPA will submit a report containing this rule and other required information to the U.S. Senate, the U.S. House of Representatives, and the Comptroller General of the United States prior to publication of the rule in the **Federal Register**. This rule is not a ''major rule'' as defined by 5 U.S.C. 804(2).

C. Petitions for Judicial Review

Under section 307(b)(1) of the Clean Air Act, petitions for judicial review of this action must be filed in the United States Court of Appeals for the appropriate circuit by January 2, 2007. Filing a petition for reconsideration by the Administrator of this final rule does not affect the finality of this rule for the purposes of judicial review nor does it extend the time within which a petition for judicial review may be filed, and shall not postpone the effectiveness of such rule or action. This action may not be challenged later in proceedings to enforce its requirements. (See section 307(b)(2).) This final rule approves West Virginia's prevention of significant deterioration (PSD) preconstruction air quality permit program.

List of Subjects in 40 CFR Part 52

Environmental protection, Air pollution control, Carbon monoxide, Intergovernmental relations, Nitrogen dioxide, Ozone, Particulate matter, Reporting and recordkeeping requirements, Sulfur oxides, Volatile organic compounds.

Dated: October 16, 2006.

William T. Wisniewski,

Acting Regional Administrator, Region III.

■ 40 CFR Part 52 is amended as follows:

PART 52—[AMENDED]

■ 1. The authority citation for 40 CFR part 52 continues to read as follows:

Authority: 42 U.S.C. 7401 *et seq.*

Subpart XX—West Virginia

■ 2. In § 52.2520, the table in paragraph (c) is amended by revising the entries for 45 CSR 14 to read as follows:

§ 52.2520 Identification of plan.

* * * * *

(c) * * *

EPA-APPROVED REGULATIONS IN THE WEST VIRGINIA SIP

State citation [Chapter 16–20 or 45 CSR]	Title/subject	State effective date	EPA approval date	Additional explanation/ citation at 40 CFR 52.2565
*	*	*	*	*
45 CSR 14	Permits for Construction and Major Modification of Major Stationary Sources of Air Pollution for the Prevention of Significant Deterioration			
Section 45–14–1	General	6/2/05	11/2/06 [*Insert page number where the document begins*].	
Section 45–14–2	Definitions	6/2/05	11/2/06 [*Insert page number where the document begins*].	
Section 45–14–3	Applicability	6/2/05	11/2/06 [*Insert page number where the document begins*].	New Section.
Section 45–14–4	Ambient Air Quality Increments and Ceilings	6/2/05	11/2/06 [*Insert page number where the document begins*].	Formerly Section 45–14–3.
Section 45–14–5	Area Classification	6/2/05	11/2/06 [*Insert page number where the document begins*].	Formerly Section 45–14–4.
Section 45–14–6	Prohibition of Dispersion Enhancement Techniques.	6/2/05	11/2/06 [*Insert page number where the document begins].*	Formerly Section 45–14–5.
Section 45–14–7	Registration, Report and Permit Requirements for Major Stationary Sources and Major Modification.	6/2/05	11/2/06 [*Insert page number where the document begins*].	Formerly Section 45–14–6.
Section 45–14–8	Control Technology Requirements	6/2/05	11/2/06 [*Insert page number where the document begins*].	Formerly Section 45–14–7.
Section 45–14–9	Requirements Relating to the Source's Impact on Air Quality.	6/2/05	11/2/06 [*Insert page number where the document begins*].	Formerly Section 45–14–8.
Section 45–14–10	Modeling Requirements	6/2/05	11/2/06 [*Insert page number where the document begins*].	Formerly Section 45–14–9.
Section 45–14–11	Air Quality Monitoring Requirements	6/2/05	11/2/06 [*Insert page number where the document begins*].	Formerly Section 45–14–10.
Section 45–14–12	Additional Impacts Analysis Requirements	6/2/05	11/2/06 [*Insert page number where the document begins*].	Formerly Section 45–14–11.
Section 45–14–13	Additional Requirements and Variances for Sources Impacting Federal Class I Areas.	6/2/05	11/2/06 [*Insert page number where the document begins*].	Formerly Section 45–14–12.
Section 45–14–14	Procedures for Sources Employing Innovative Control Technology.	6/2/05	11/2/06 [*Insert page number where the document begins*].	Formerly Section 45–14–13.
Section 45–14–15	Exclusions From Increment Consumption	6/2/05	11/2/06 [*Insert page number where the document begins*].	Formerly Section 45–14–14.

EPA-APPROVED REGULATIONS IN THE WEST VIRGINIA SIP—Continued

State citation [Chapter 16–20 or 45 CSR]	Title/subject	State effective date	EPA approval date	Additional explanation/ citation at 40 CFR 52.2565
Section 45–14–16	Specific Exemptions	6/2/05	11/2/06 [*Insert page number where the document begins*].	Formerly Section 45–14–15.
Section 45–14–17	Public Review Procedures	6/2/05	11/2/06 [*Insert page number where the document begins*].	Formerly Section 45–14–16.
Section 45–14–18	Public Meetings	6/2/05	11/2/06 [*Insert page number where the document begins*].	Formerly Section 45–14–17.
Section 45–14–19	Permit Transfer, Cancellation, and Responsibility.	6/2/05	11/2/06 [*Insert page number where the document begins*].	Formerly Section 45–14–18.
Section 45–14–20	Disposition of Permits	6/2/05	11/2/06 [*Insert page number where the document begins*].	Formerly Section 45–14–19.
Section 45–14–21	Conflict with Other Permitting Rules	6/2/05	11/2/06 [*Insert page number where the document begins*].	Formerly Section 45–14–20.
Section 45–14–25	Actual PALs	6/2/05	11/2/06 [*Insert page number where the document begins*].	New Section.
Section 45–14–26	Inconsistency Between Rules	6/2/05	11/2/06 [*Insert page number where the document begins*].	New Section.
*	*	*	*	*	*	*

* * * * *

[FR Doc. E6–18276 Filed 11–1–06; 8:45 am]

BILLING CODE 6560–50–P

DEPARTMENT OF TRANSPORTATION

National Highway Traffic Safety Administration

49 CFR Part 571

[Docket No. NHTSA–2006–15712]

Federal Motor Vehicle Safety Standards; Glazing Materials; Correction

AGENCY: National Highway Traffic Safety Administration (NHTSA), Department of Transportation (DOT).

ACTION: Correcting amendment.

SUMMARY: In July 2003, the agency published a final rule updating our Federal motor vehicle safety standard on glazing materials. As part of that rulemaking, boundaries were established for shade bands on vehicle windshields in order to limit their potential encroachment on the driver's field of view. As part of the new shade band requirements, the Society of Automotive Engineers (SAE) Recommended Practice J100 (rev. June 1995), ''Class 'A' Vehicle Glazing Shade Bands,'' was incorporated by reference into the standard. However, in a July 2005 final rule responding to petitions for reconsideration of that earlier rulemaking, the standard's provisions related to shade bands requirements were amended, and as a result, a later but substantively identical version of SAE J100 (*i.e.*, the November 1999 revision) was inadvertently included in the standard. The July 2005 final rule should have referenced SAE J100 (rev. June 1995), the document properly incorporated by reference into the safety standard. This document corrects this inconsistency resulting from administrative error.

DATES: *Effective date:* This correcting amendment is effective December 4, 2006.

FOR FURTHER INFORMATION CONTACT: Mr. Eric Stas, Attorney-Advisor, Office of the Chief Counsel, NCC–112, 400 Seventh Street, SW., Washington, DC 20590. Telephone: (202) 366–2992. Fax: (202) 366–3820.

SUPPLEMENTARY INFORMATION: On July 25, 2003, the agency published a final rule updating Federal Motor Vehicle Safety Standard (FMVSS) No. 205, *Glazing Materials* (68 FR 43964). As part of that rulemaking, boundaries were established for shade bands on vehicle windshields in order to limit their potential encroachment on the driver's field of view. Prior to that rulemaking, the size of the shade band was not explicitly defined under the standard. As part of the new shade band requirements (*see* S3.2(c)), the final rule incorporated by reference SAE Recommended Practice J100 (rev. June 1995), ''Class 'A' Vehicle Glazing Shade Bands'' into the standard (*see* 68 FR 43964, 43972 (July 25, 2003)).

However, in a July 12, 2005 final rule responding to petitions for reconsideration of that earlier rulemaking, the standard's provisions related to shade bands requirements were amended, and as a result, a later version of SAE J100 (*i.e.*, the November 1999 revision) was inadvertently included in the standard under paragraph S5.3.1 (*see* 70 FR 39959, 39965). The latest version of SAE J100 (the November 1999 revision) is not substantively different from the prior June 1995 version of that standard; it merely reaffirmed that Recommended Practice as part of SAE's cyclical review process. Furthermore, the final rule responding to petitions for reconsideration does not reflect any affirmative intention on the part of the agency to adopt the later version of SAE J100. Thus, the July 2005 final rule's amendments to Standard No. 205 should have referenced SAE J100 (rev. June 1995), the document properly incorporated by reference into the safety standard. This document corrects this inconsistency resulting from administrative error.

This correction will not impose or relax any substantive requirements or burdens on manufacturers. Therefore, NHTSA finds for good cause that any notice and opportunity for comment on these correcting amendments are not necessary.

List of Subjects in 49 CFR Part 571

Imports, Incorporation by reference, Motor vehicle safety; Reporting and recordkeeping requirements, Tires.

■ Accordingly, 49 CFR part 571 is corrected by making the following correcting amendment:

PART 571—FEDERAL MOTOR VEHICLE SAFETY STANDARDS

■ 1. The authority citation for part 571 continues to read as follows:

Authority: 49 U.S.C. 322, 30111, 30115, 30117, and 30166; delegation of authority at 49 CFR 1.50.

■ 2. Paragraph S5.3.1 of 571.205 is revised to read as follows:

§ 571.205 Glazing materials.

* * * * *

S5.3 *Shade Bands.* * * *

S5.3.1 Shade bands for windshields shall comply with SAE J100 JUNE 1995.

* * * * *

Issued: October 26, 2006.

Stephen R. Kratzke,

Associate Administrator for Rulemaking.

[FR Doc. E6–18390 Filed 11–1–06; 8:45 am]

BILLING CODE 4910–59–P

DEPARTMENT OF COMMERCE

National Oceanic and Atmospheric Administration

50 CFR Part 665

[Docket No. 060724200–6275–02; I.D. 071106G]

RIN 0648–AT94

Fisheries in the Western Pacific; Western Pacific Bottomfish and Seamount Groundfish Fisheries; Guam Bottomfish Management Measures

AGENCY: National Marine Fisheries Service (NMFS), National Oceanic and Atmospheric Administration (NOAA), Commerce.

ACTION: Final rule.

SUMMARY: NMFS issues this final rule to implement Amendment 9 to the Fishery Management Plan for Bottomfish and Seamount Groundfish Fisheries of the Western Pacific Region (FMP) that prohibits large vessels, i.e., those 50 ft (15.2 m) or longer, from fishing for bottomfish in Federal waters within 50 nm (92.6 km) around Guam, and establishes Federal permitting and reporting requirements for these large bottomfish fishing vessels. This final rule is intended to maintain viable participation and bottomfish catch rates by small vessels in the fishery, to maintain traditional patterns of the bottomfish supply to local Guam markets, to provide for the collection of adequate fishery information for effective management, and to reduce the risk of local depletion of deepwater bottomfish stocks near Guam.

DATES: This final rule is effective December 4, 2006, except for the revisions to § 665.14 and § 665.61, which require approval by the Office of Management and Budget (OMB) under the Paperwork Reduction Act (PRA). When OMB approval is received, the effective date will be announced in the **Federal Register**.

ADDRESSES: Copies of the FMP amendment, including an Environmental Assessment (EA), regulatory impact review (RIR) and final regulatory flexibility analysis (FRFA) may be obtained from William L. Robinson, Administrator, NMFS Pacific Islands Region (PIR), 1601 Kapiolani Boulevard, Suite 1110, Honolulu, HI 96814–4700. Written comments regarding the burden-hour estimates or other aspects of the collection-of-information requirements contained in this final rule may be submitted to William L. Robinson (see **ADDRESSES**), or to David Rostker, OMB, by e-mail to *David_Rostker@omb.eop.gov*, or by fax to 202–395–7285.

FOR FURTHER INFORMATION CONTACT: Robert Harman, NMFS PIR, 808–944–2271.

SUPPLEMENTARY INFORMATION:

Electronic Access

This **Federal Register** document is also accessible via the Internet at the web site of the Office of the Federal Register: *www.gpoaccess.gov/fr/index.html*.

Background

The bottomfish fishery that operates in Federal waters around Guam is managed under the Fishery Management Plan for the Bottomfish and Seamount Groundfish Fisheries of the Western Pacific Region (FMP). Aside from restrictions on the use of certain destructive fishing methods, such as bottom trawling, bottom set nets, poisons, and explosives, that apply to the bottomfish fisheries throughout the western Pacific, the fishery is mostly unregulated at this time. Potential developments in the fishery, however, led the Western Pacific Fishery Management Council to recommend the management measures in this final rule.

The Guam-based bottomfish fishery is a mix of subsistence, recreational, and limited commercial fishing from primarily small boats on nearshore slopes. There is a potential component of the fishery, however, in which fishermen in relatively large vessels (i.e., greater than 50 ft or 15.2 m in length) target deep-slope fish species, particularly onaga (longtail red snapper, or flame snapper, *Etelis coruscans*). This fishery is currently inactive, but several vessels have operated in the past. The fish were caught on offshore banks in Federal waters, landed at Guam's commercial port and, rather than entering the local market, were exported by air to foreign markets. The activity occurred on some or all of Guam's southern banks, including Galvez, 11–Mile, Santa Rosa, White Tuna, and Baby Banks. Most of the vessels fishing on these southern banks targeted the shallow-water bottomfish complex, but some targeted the deep-water complex. The banks to the north of Guam, including Rota Bank, and far to the west of Guam, including Bank A, appear not to have been fished.

The potential for renewed large-vessel bottomfish fishing activity prompted concerns about fishery information being inadequate for effective management, about the potential for small-vessel catch rates declining to non-viable levels, about threats to sustained participation by smaller vessels in the fishery, about disruptions to traditional patterns of supply of bottomfish products to the local market, and about localized depletion of bottomfish stocks.

Based on the current FMP reporting and management requirements, existing data collection programs can provide adequate information about Guam's inshore bottomfish fisheries that are conducted by smaller vessels. Thus, this final rule does not establish additional data collection requirements on smaller vessels.

There is no evidence, to date, that the bottomfish stocks around Guam are currently subject to overfishing or are being overfished. Deepwater bottomfish species, however, have life history characteristics (slow growth, relatively low productivity and limited migration ranges) that make local fish stocks sensitive to fishing pressure, and severe local depletion can result in reduced productivity of the stock as a whole.

Closing areas to potential large vessel bottomfish fishing reduces the risk of

local depletion of deepwater bottomfish stocks in those areas. This final rule redirects possible large-vessel bottomfish fishing to areas greater than 50 nm (92.6 km) from Guam, displacing some potential fishing pressure on the nearshore slope and banks to areas that have higher bottomfish abundance and experience lower fishing pressure from smaller boats.

This final rule intends to ensure that adequate information is routinely collected from the large-vessel, export-oriented bottomfish fishery that might take place in Federal waters around Guam, to maintain adequate opportunities for small-scale commercial, recreational, and subsistence bottomfish fishermen in Federal waters around Guam, to provide for sustained community participation by smaller vessels in the Guam bottomfish fishery, to encourage consistent availability of fresh, locally-caught deepwater bottomfish products to Guam consumers, and to reduce the potential risk of local depletion of deepwater bottomfish stocks near Guam.

Additional background information on this final rule may be found in the preamble to the proposed rule published on August 14, 2006 (71 FR 46441), and is not repeated here.

Comments and Responses

On July 24, 2006, NMFS published in the **Federal Register** an announcement on the availability of the subject FMP amendment (71 FR 41770), and on August 14, 2006, NMFS published a notice of the proposed rule (71 FR 46441). The public comment period for both notices ended on September 22, 2006. NMFS received one comment from the public, and responds to this comment, as follows:

Comment 1: The commentor expressed support for the proposed rule out of a concern for the impact of large vessels fishing in the area, and for marine resources.

Response. Comment noted; NMFS is also concerned about the potential for large bottomfish vessels to locally deplete bottomfish stocks. The final rule establishes an area closed to large bottomfish vessels. This measure is intended to prevent overfishing of bottomfish around Guam.

Changes to the Proposed Rule

In this final rule, several minor editorial changes were made to the proposed rule. In the time since the proposed rule for this action was published on August 14, 2006, another final rule, referred to as the ''omnibus'' rule, was published. The omnibus rule, published on September 12, 2006 (71 FR 53605), made changes under three western Pacific FMPs to the regulatory text in several sections of 50 CFR Part 665. Those changes necessitated minor adjustments in the regulatory text contained in this final rule. Specifically, the instructions for § 665.14(a) were modified in this final rule to include omnibus rule requirements for fishing record forms for the Pacific Remote Island Areas (PRIA). The instructions for § 665.61(a)(1) were modified in this final rule to include omnibus rule requirements for PRIA permits. Finally, the instructions for § 665.62 were modified in this final rule to renumber the new paragraphs to account for omnibus rule prohibitions.

In the proposed rule, the coordinates for the closed area boundary contained several errors. Proposed Point GU–1–A (14°23′43″ N., 144°27′36′ E.) was incorrectly positioned within EEZ waters around the CNMI, and was moved to coincide with the boundary separating the EEZ waters around Guam from those waters around the CNMI. The new point GU–1–A is located at 14°16′ N., 144°17′ E. Moving point GU–1–A to coincide with the boundary put it very close to proposed point GU–1–B (14°10′ N., 144°11′ E.), removing the need for point GU–1–B in defining the closed area. Thus, point GU–1–B was eliminated. Proposed point H (12° 35′ N., 144°15′ E.) introduced an unintended and unnecessary jog in the boundary, and was removed to straighten the boundary. The final coordinates were renumbered, and they accurately define the area that is approximately 50 nm from Guam's shoreline, and take into account the boundary between Guam and the CNMI.

Other instructions are unchanged from the proposed rule.

Classification

The NOAA Assistant Administrator for Fisheries (AA) determined that this FMP amendment is necessary for the conservation and management of the affected fisheries, and that the amendment is consistent with the Magnuson-Stevens Fishery Conservation and Management Act (Magnuson-Stevens Act) and other applicable laws.

NMFS prepared an EA for this FMP amendment, and the AA concluded that there will be no significant impact on the human environment as a result of this rule. NMFS determined that the preferred management alternative has the greatest likelihood of achieving the purpose and need for this Federal action. In addition, all beneficial and adverse impacts of the proposed action have been addressed to reach the conclusion of no significant impacts. A copy of the EA is available from William L. Robinson (see **ADDRESSES**).

This final rule has been determined to be not significant for purposes of Executive Order 12866.

Consistent with section 604 of the Regulatory Flexibility Act, NMFS prepared a FRFA for Amendment 9, as described below. This FRFA incorporates the initial regulatory flexibility analysis (IRFA) prepared for Amendment 9. The preamble to the proposed rule included a detailed summary of the analyses contained in the IRFA, and that discussion is not repeated in its entirety here.

A statement of the need for, and objectives of, the rule is provided in the preambles to the proposed rule and to this final rule, and is not repeated here. There were no comments received on the IRFA.

The Small Business Administration defines a commercial fishing business as a small entity if annual gross receipts are less than $4.0 million. All bottomfish vessels impacted by this rulemaking are considered to be small entities under this definition. Therefore, there are no economic impacts resulting from disproportionality between large and small vessels.

Number of Affected Small Entities

This final rule is expected to adversely impact as many as 1 3 bottomfish vessels of length greater than 50 ft (15.2 m) (large vessels) that have previously operated, but are not currently operating, in Federal waters within 50 nm (92.6 km) of Guam. Alternative 3, which would implement a trip limit on onaga, and alternative 4, which would implement limited access, would impact 100 300 bottom fish vessels operating in Federal waters around Guam, regardless of their size.

Recordkeeping and Reporting Requirements

This final rule would implement permitting, recordkeeping, and reporting requirements for large vessels engaged in the fishery. The costs associated with obtaining permits and keeping and reporting information in logbooks would be minimal. The annual personnel cost for potential respondents is estimated at $62 per year. This was derived by multiplying the number of hours of burden per year (2.5 hr) times an hourly cost rate of $25, the estimated range of hourly wage rates for fishermen harvesting bottomfish in the western Pacific. There is no ''start up'' capital cost for complying with the reporting requirement. The estimated cost to potential respondents, other than

personnel cost, is about $20 per respondent per year. This cost includes telephone charges and other incidental costs associated with sending the logbook forms to NMFS after each trip.

Minimizing Economic Impacts on Small Entities

NMFS rejected alternatives imposing trip limits for onaga or a limited access system, in addition to the permitting, recordkeeping and reporting requirements for large vessels, because these alternatives would have had economic impacts on all participants in the fishery and were not necessary to meet the objectives of FMP Amendment 9. NMFS instead chose the alternative that would best achieve the objectives of FMP Amendment 9, including the continued economic viability of the small boat fishery, an alternative which focused on large vessel participants. Because data on costs and revenues for large vessels are not available, the economic impacts to the profitability of the 1 3 vessels that could potentially be impacted by this rulemaking cannot be directly estimated. Implementation of the rule would require the affected vessels to search elsewhere for new bottomfish grounds, or to change gear and enter another fishery. Regardless of their choice, it is likely that these vessels would experience adverse economic impacts in the form of reductions in potential profitability under this final rule. The extent of the impacts would depend on the opportunity costs of each individual vessel relative to the profits previously earned in the bottomfish fishery off of Guam.

Small Entity Compliance Guide

Section 212 of the Small Business Regulatory Enforcement Fairness Act of 1996 states that, for each rule or group of related rules for which an agency is required to prepare a FRFA, the agency shall publish one or more guides to assist small entities in complying with the rule, and shall designate such publications as ''small entity compliance guides.'' The agency shall explain the actions a small entity is required to take to comply with a rule or group of rules. As part of this rulemaking process, a small entity compliance guide was prepared. The guide will be sent to all large vessels that have historic landings in this fishery. In addition, copies of this final rule and guide will be made available by William L. Robinson (see **ADDRESSES**), and at the following web site: *http://swr.nmfs.noaa.gov/pir/index.htm*.

This final rule contains revisions to collection-of- information requirements subject to the PRA under OMB control numbers 0648–0214 and 0648–0490. The revisions to these collection-of-information requirements have not yet been approved, but OMB approval is expected in the near future. NMFS will publish a notice when these requirements are cleared by OMB and are, therefore, effective (see **DATES**). The public reporting burden for these requirements is estimated to be 30 min for a new permit application, and 5 min for completing a fishing logbook each day. It is estimated that up to three vessels may be subject to the reporting requirement at any given time, and that each vessel will fish, on average, no more than 50 days/yr, resulting in a total paperwork burden of approximately 14 hr/yr. These estimates include time for reviewing instructions, searching existing data sources, gathering and maintaining the data needed, and completing and reviewing the collection of information.

Send comments regarding these burden estimates or any other aspect of this data collection, including suggestions for reducing the burden, to William L. Robinson, NMFS PIR (see *ADDRESSES*), or by e-mail to *David_Rostker@omb.eop.gov*, or fax to 202–395–7285.

Notwithstanding any other provision of the law, no person is required to respond to, and no person shall be subject to penalty for failure to comply with, a collection of information subject to the requirements of the PRA, unless that collection of information displays a currently valid OMB control number.

List of Subjects in 50 CFR Part 665

Administrative practice and procedure, American Samoa, Fisheries, Fishing, Guam, Hawaii, Hawaiian natives, Northern Mariana Islands, Pacific Remote Island Areas, Reporting and recordkeeping requirements.

Dated: October 27, 2006.

Samuel D. Rauch III,

Deputy Assistant Administrator for Regulatory Programs, National Marine Fisheries Service.

■ For the reasons set out in the preamble, 50 CFR part 665 is amended as follows:

PART 665—FISHERIES IN THE WESTERN PACIFIC

■ 1. The authority citation for part 665 continues to read as follows:

Authority: 16 U.S.C. 1801 *et seq.*

■ 2. In § 665.12, add the definition of ''Guam bottomfish permit'' and revise the definition of ''Large vessel'' as follows:

§ 665.12 Definitions.

* * * * *

Guam bottomfish permit means the permit required by § 665.61(a)(4) to use a large vessel to fish for, land, or transship bottomfish management unit species shoreward of the outer boundary of the Guam subarea of the bottomfish fishery management area.

* * * * *

Large vessel means, as used in §§ 665.22, 665.37, 665.38, 665.61, 665.62, and 665.70, any vessel equal to or greater than 50 ft (15.2 m) in length overall.

* * * * *

■ 3. In § 665.13, revise paragraph (f)(1) to read as follows:

§ 665.13 Permits and fees.

* * * * *

(f) *Fees.* (1) PIRO will not charge a fee for a permit issued under subpart D or F of this part, for a Ho'omalu Zone limited access permit, or for a Guam bottomfish permit issued under § 665.61.

* * * * *

■ 4. In § 665.14, revise paragraph (a) to read as follows:

§ 665.14 Reporting and recordkeeping.

(a) *Fishing record forms.* The operator of any fishing vessel subject to the requirements of §§ 665.21, 665.41, 665.61(a)(4), 665.81, or 665.602 must maintain on board the vessel an accurate and complete record of catch, effort, and other data on report forms provided by the Regional Administrator. All information specified on the forms must be recorded on the forms within 24 hr after the completion of each fishing day. Each form must be signed and dated by the fishing vessel operator. For the fisheries managed under § § 665.21, 665.41, 665.61(a)(4), and 665.81, the original logbook form for each day of the fishing trip must be submitted to the Regional Administrator within 72 hr of each landing of MUS, unless the fishing was authorized under a PRIA troll and handline permit, a PRIA crustaceans fishing permit, or a PRIA precious corals fishing permit, in which case the original logbook form for each day of fishing within the PRIA EEZ waters must be submitted to the Regional Administrator within 30 days of each landing of MUS. For fisheries managed under § 665.602, the original logbook form for each day of the fishing trip must be submitted to the Regional Administrator within 30 days of each landing of MUS.

* * * * *

■ 5. In § 665.61, revise paragraph (a)(1) and add paragraph (a)(4) to read as follows:

§ 665.61 Permits.

(a) *Applicability.* (1) The owner of any vessel used to fish for bottomfish management unit species in the Northwestern Hawaiian Islands Subarea, Pacific Remote Island Areas Subarea, or Guam Subarea must have a permit issued under this section and the permit must be registered for use with that vessel.

* * * * *

(4) A fishing vessel of the United States must be registered for use under a Guam bottomfish permit if that vessel is a large vessel and is used to fish for, land, or transship bottomfish management unit species shoreward of the outer boundary of the Guam subarea of the bottomfish fishery management area.

* * * * *

■ 6. In § 665.62, add paragraphs (g), (h), and (i) to read as follows:

§ 665.62 Prohibitions.

* * * * *

(g) Use a large vessel that does not have a valid Guam bottomfish permit registered for use with that vessel to fish for, land, or transship bottomfish management unit species shoreward of the outer boundary of the Guam subarea of the bottomfish fishery management area in violation of § 665.61(a).

(h) Use a large vessel to fish for bottomfish management unit species within the Guam large vessel bottomfish prohibited area, as defined in § 665.70(b).

(i) Land or transship, shoreward of the outer boundary of the Guam subarea of the bottomfish fishery management area, bottomfish management unit species that were harvested in violation of § 665.62(h).

■ 7. Under subpart E, add a new § 665.70 to read as follows:

§ 665.70 Bottomfish fishery area management.

(a) *Large vessel bottomfish prohibited area.* A large vessel of the United States may not be used to fish for bottomfish management unit species in any large vessel bottomfish prohibited area as defined in paragraph (b) of this section.

(b) *Guam large vessel bottomfish prohibited area (Area GU–1).* The large vessel bottomfish prohibited area around Guam means the waters of the US EEZ surrounding Guam that are enclosed by straight lines connecting the following coordinates in the order listed:

Point	N. lat.	E. long.
GU–1–A	14°16′	144°17′
GU–1–B	13° 50′	143° 52′
GU–1–C	13° 17′	143° 46′
GU–1–D	12° 50′	143° 54′
GU–1–E	12° 30′	144° 14′
GU–1–F	12° 25′	144° 51′
GU–1–G	12° 57′	145° 33′
GU–1–H	13° 12′	145° 43′
GU–1–I	13° 29′ 44″	145° 48′ 27″
GU–1–A	14° 16′	144° 17′

[FR Doc. E6–18506 Filed 11–1–06; 8:45 am]

BILLING CODE 3510–22–S

Proposed Rules

Federal Register
Vol. 71, No. 212
Thursday, November 2, 2006

This section of the FEDERAL REGISTER contains notices to the public of the proposed issuance of rules and regulations. The purpose of these notices is to give interested persons an opportunity to participate in the rule making prior to the adoption of the final rules.

DEPARTMENT OF AGRICULTURE

Agricultural Marketing Service

7 CFR Part 51

[Docket Number FV–06–313]

United States Standards for Grades of Winter Pears

AGENCY: Agricultural Marketing Service, USDA.

ACTION: Advance notice of proposed rulemaking.

SUMMARY: The Agricultural Marketing Service (AMS) prior to undertaking research and other work associated with revising official grade standards, is soliciting comments on the possible revisions of the United States Standards for Grades of Winter Pears. AMS has been reviewing the Fresh Fruit and Vegetable grade standards for usefulness in serving the industry. As a result AMS is considering revisions to the winter pear standard to include removing the section 51.1309, Condition after storage or transit. This section has caused confusion within the industry in the past due to different procedures incurred when reporting inspection findings in comparison to other grade standards. Additionally, AMS is seeking comments regarding any other revisions to the standards that may be necessary to better serve the industry.

DATES: Comments must be received by January 2, 2007.

ADDRESSES: Interested persons are invited to submit written comments to the Standardization Section, Fresh Products Branch, Fruit and Vegetable Programs, Agricultural Marketing Service, U.S. Department of Agriculture, 1400 Independence Ave., SW., Room 1661 South Building, Stop 0240, Washington, DC 20250–0240; Fax (202) 720–8871, E-mail *FPB.DocketClerk@usda.gov.* Comments should make reference to the dates and page number of this issue of the **Federal Register** and will be made available for public inspection in the above office during regular business hours. The United States Standards for Grades of Winter Pears are available either at the above address or by accessing the AMS, Fresh Products Branch Web site at: *http://www.ams.usda.gov/standards/stanfrfv.htm.*

FOR FURTHER INFORMATION CONTACT: Cheri L. Emery, at the above address or call (202) 720–2185; E-mail *Cheri.Emery@usda.gov.*

SUPPLEMENTARY INFORMATION: Section 203(c) of the Agricultural Marketing Act of 1946 (7 U.S.C. 1621–1627), as amended, directs and authorizes the Secretary of Agriculture ''To develop and improve standards of quality, condition, quantity, grade and packaging and recommend and demonstrate such standards in order to encourage uniformity and consistency in commercial practices.'' AMS is committed to carrying out this authority in a manner that facilitates the marketing of agricultural commodities. AMS makes copies of official standards available upon request.

AMS is considering revisions to the United States Standards for Grades of Winter Pears. These standards were last published on September 10, 1955.

Executive Order 12866

The Office of Management and Budget has waived the review process required by Executive Order 12866 for this action.

Background

AMS has been reviewing the Fresh Fruit and Vegetable grade standards for usefulness in serving the industry. AMS is considering a revision to the United States Standards for Grades of Winter Pears. The revision would eliminate the section 51.1309, Condition after storage or transit, which states that ''decay, scald or other deterioration which may have developed on pears after they have been in storage or transit shall be considered as affecting condition and not the grade.'' Due to this requirement, pears may fail to meet the requirements of the grade the pears would be reported as ''meets grade.'' For example: a lot of pears that fail to meet the requirements of the U.S. No. 1 grade due to exceeding the decay tolerance would be reported as ''U.S. No. 1 with decay being a factor of condition.'' This has caused confusion within the industry as generally when a product exceeds a tolerance for grade it is reported as ''fails to grade.'' Removing this section will eliminate any confusion in the future and bring the winter pear standard in line with other standards. However, prior to undertaking detailed work to develop the proposed revision to the standards, AMS is soliciting comments on these changes as well as any other revisions to the United States Standards for Grades of Winter Pears to better serve the industry.

This notice provides for a 60-day comment period for interested parties to comment on whether any changes are necessary to the standards. Should AMS conclude that there is a need for any revisions of the standards, the proposed revisions will be published in the **Federal Register** with a request for comments.

Authority: 7 U.S.C. 1621–1627.

Dated: October 27, 2006.

Lloyd C. Day,

Administrator, Agricultural Marketing Service.

[FR Doc. E6–18504 Filed 11–1–06; 8:45 am]

BILLING CODE 3410–02–P

DEPARTMENT OF TRANSPORTATION

Federal Aviation Administration

14 CFR Part 25

[Docket No. NM354; Notice No. 25–06–09A–SC]

Special Conditions: Boeing Commercial Airplane Group, Boeing Model 777 Series Airplane; Overhead Cross Aisle Stowage Compartments

AGENCY: Federal Aviation Administration (FAA), DOT.

ACTION: Notice of proposed special conditions (amended).

SUMMARY: The FAA amends and supersedes proposed special conditions for the Boeing Model 777 series airplanes. The previous notice (Notice No. 25–06–09–SC) published on October 18, 2006 (71 FR 61432), did not reflect the final FAA position on the novel design feature, and was thus in error. This airplane, modified by Boeing Commercial Airplane Group, will have novel or unusual design features associated with overhead cross aisle stowage compartments. The applicable airworthiness regulations do not contain

adequate or appropriate safety standards for these design features. These amended proposed special conditions contain the additional safety standards the Administrator considers necessary to establish a level of safety equivalent to that established by the existing airworthiness standards.

DATES: We must receive your comments on or before November 13, 2006.

ADDRESSES: You may mail or deliver comments on these amended proposed special conditions in duplicate to: Federal Aviation Administration, Transport Airplane Directorate, Attn: Rules Docket (ANM–113), Docket No. NM354, 1601 Lind Avenue, SW., Renton, Washington 98057–3356. You must mark your comments: Docket No. NM354.

FOR FURTHER INFORMATION CONTACT: Jayson Claar, FAA, Airframe/Cabin Branch, ANM–115, Transport Airplane Directorate, Aircraft Certification Service, 1601 Lind Avenue, SW., Renton, Washington 98057–3356; telephone (425) 227–2194; facsimile (425) 227–1232.

SUPPLEMENTARY INFORMATION:

Comments Invited

We invite interested people to take part in this rulemaking by sending written comments, data, or views. The most helpful comments reference a specific portion of the amended proposed special conditions, explain the reason for any recommended change, and include supporting data. We ask that you send us two copies of written comments.

We will file in the docket all comments we receive, as well as a report summarizing each substantive public contact with FAA personnel concerning these amended proposed special conditions. You may inspect the docket before and after the comment closing date. If you wish to review the docket in person, go to the address in the **ADDRESSES** section of this preamble between 7:30 a.m. and 4 p.m., Monday through Friday, except Federal holidays.

We will consider all comments we receive on or before the closing date for comments. We will consider comments filed late if it is possible to do so without incurring expense or delay. We may change these amended proposed special conditions based on the comments we receive.

If you want the FAA to acknowledge receipt of your comments on these amended proposed special conditions, include with your comments a pre-addressed, stamped postcard on which the docket number appears. We will stamp the date on the postcard and mail it back to you.

Background

On April 20, 2005, Boeing Commercial Airplane Group, Seattle, Washington, applied for a supplemental type certificate to permit installation of overhead cross aisle stowage compartments in Boeing 777 series airplanes. The Boeing Model 777 series airplanes are large twin engine airplanes with four or five pairs of Type A exits. The Boeing 777 airplanes can be configured with various passenger capacities and range.

The regulations do not address the novel and unusual design features associated with the installation of overhead cross aisle stowage compartments installed on the Boeing Model 777, making these amended proposed special conditions necessary. Generally, the requirements for overhead stowage compartments are similar to stowage compartments in remote crew rest compartments (i.e., located on lower lobe, main deck or overhead) already in use on Boeing Model 777 and 747 series airplanes. Remote crew rest compartments have been previously installed and certified in the main passenger cabin area, above the main passenger area, and below the passenger cabin area adjacent to the cargo compartment of the Boeing Model 777–200, and –300 series airplanes. On October 18, 2006, a Notice of Proposed Special Conditions was published to address the novel design feature. However, the notice inadvertently did not reflect the FAA's final position on the proposed requirements. This amended notice corrects that error.

Type Certification Basis

Under the provisions of § 21.101, Boeing Commercial Airplane Group must show that the Boeing Model 777, as changed, continues to meet the applicable provisions of the regulations incorporated by reference in Type Certificate No. T00001SE or the applicable regulations in effect on the date of application for the change. The regulations incorporated by reference in the type certificate are commonly referred to as the ''original type certification basis.'' The regulations incorporated by reference in Type Certificate No. T00001SE for the Boeing Model 777 series airplanes include Title 14 Code of Federal Regulations (CFR), part 25, as amended by Amendments 25–1 through 25–100, with exceptions, for various models. Refer to Type Certificate No. T00001SE, as applicable, for a complete description of the certification basis for this model, including certain special conditions that are not relevant to these amended proposed special conditions.

If the Administrator finds the applicable airworthiness regulations (part 25 as amended) do not contain adequate or appropriate safety standards for the Boeing Model 777 because of a novel or unusual design feature, special conditions are prescribed under the provisions of § 21.16.

In addition to the applicable airworthiness regulations and special conditions, the Boeing Model 777 must comply with the fuel vent and exhaust emission requirements of 14 CFR part 34 and the noise certification requirements of 14 CFR part 36.

The FAA issues special conditions, as defined in § 11.19, under § 11.38 and they become part of the type certification basis under § 21.101.

Special conditions are initially applicable to the model for which they are issued. Should the applicant apply for a change to modify any other model included on the same type certificate to incorporate the same or similar novel or unusual design feature, the special conditions would also apply to the other model under § 21.101.

Novel or Unusual Design Features

The Boeing Model 777 will incorporate the following novel or unusual design features: The installation of powered lift-enabled stowage compartments that rise into the overhead area and lower into the cabin.

The overhead cross aisle stowage compartments are configured to allow stowage of galley type standard containers as well as coats, bags, and other items typically stowed in closets or bins. These stowage compartments will be located above the emergency exit cross aisles of Boeing Model 777 series airplanes. Because the compartment is lowered into the main cabin, it could affect egress if it cannot be raised again. The overhead compartment may lower into a cross aisle as defined in § 25.813, but it may also lower into other potential egress paths. For the purposes of these amended proposed special conditions, the same criteria apply, whether or not the egress path is required by § 25.813. Therefore, as used in these amended proposed special conditions, the term ''overhead cross aisle stowage compartment'' addresses all such compartments.

Each stowage compartment is accessed from the main deck by a powered lift that lowers and raises the stowage compartment between the overhead and the main deck. In addition, the lift can be hand cranked up and down in the event of a power or

lift motor failure. A smoke detection system will be provided in the overhead cross aisle stowage compartments.

Discussion of the Amended Proposed Special Conditions

In general, the requirements listed in these amended proposed special conditions for overhead cross aisle stowage compartments are similar to those previously approved for overhead crew rest compartments in earlier certification programs, such as for the Boeing Model 777 and Model 747 series airplanes. These amended proposed special conditions establish compartment access, power lift, electrical power, smoke/fire detection, fire extinguisher, fire containment, smoke penetration, and compartment design criteria for the overhead cross aisle stowage compartments. The overhead stowage compartments are not a direct analogy to stowage compartments in remote crew rest compartments installed and certified for Boeing Model 777 series airplanes, but the safety issues raised are similar. Features similar to those considered in the development of previous special conditions for fire protection will be included here also. The proposed requirements would provide an equivalent level of safety to that provided by other Boeing Model 777 series airplanes with similar overhead compartments.

Operational Evaluations and Approval

The FAA's Aircraft Certification Service will administer these amended proposed special conditions, which specify requirements for design approvals (that is, type design changes and supplemental type certificates) of overhead cross aisle stowage compartments.

The Aircraft Evaluation Group of the FAA's Flight Standards Service must evaluate and approve the operational use of overhead cross aisle stowage compartments prior to use. The Aircraft Evaluation Group must receive all instructions for continued airworthiness, including service bulletins, prior to the FAA accepting and issuing approval of the modification.

Proposed Special Condition No. 1, Compartment Access and Placards

Appropriate placards, or other means, are required to address door access and locking to prohibit or prevent passenger access and operation of the overhead storage compartment. There must also be a means to preclude anyone from being trapped inside the stowage compartment, if it is large enough for a person to enter. If there is more than one door providing access, each door must be equipped with these means.

Proposed Special Condition No. 2, Power Lift

The power lift must be designed so the overhead stowage compartment will not jam in the down position, even if lowered on top of a hard structure. The lift must operate at a speed that allows anyone underneath the compartment to move clear without injury. The lift controls must be placed clear of the compartment door and must be pressed continuously for lift operation. Training on operation procedures must be added to appropriate manuals.

Proposed Special Condition No. 3, Manual Operation

There must be a means to manually operate the lift that is independent of the electrical drive system. The lift must be operable by a range of occupants, including a fifth percentile female. The manual means must be capable of lowering the overhead stowage compartment quickly to the main deck to fight a fire. The manual system must be capable of raising the compartment quickly so the cross aisle or other egress path (if applicable) is not blocked in an emergency. If electrical or manual power is removed, there must be a means, such as a brake, to prevent the compartment from unrestricted movement, i.e., falling. Training on manual operation must be added to appropriate manuals.

Proposed Special Condition No. 4, Handheld Fire Extinguisher

For compartments larger than 25 cubic feet, a handheld fire extinguisher appropriate to fight the kinds of fire likely to occur in the overhead stowage compartment must be provided. This handheld fire extinguisher must be adjacent to the overhead compartment. This extinguisher must be in addition to those required for the passenger cabin.

Proposed Special Condition No. 5, Fire Containment

This special condition requires either the installation of a manually activated fire extinguishing system that is accessible from outside the overhead stowage compartment, or a demonstration that the crew could satisfactorily perform the function of extinguishing a fire under the prescribed conditions. A manually activated built-in fire extinguishing system would be required only if a crewmember could not successfully locate and get access to the fire during a demonstration where the crewmember is responding to the alarm. For the duration of the flight, the system must have adequate capacity to suppress any fire occurring in the stowage compartment considering the fire threat, volume of the compartment and the ventilation rate.

Proposed Special Condition No. 6, Smoke Penetration

The design of the compartment must provide means to exclude hazardous quantities of smoke or extinguishing agent originating in the compartment from entering other occupied areas. The means must take into account the time period during which the compartment may be accessed to manually fight a fire, if applicable.

During the one-minute smoke detection time (see Special Condition No. 7), penetration of a small quantity of smoke (one that would dissipate within 3 minutes under normal ventilation conditions) from this overhead stowage compartment design into an occupied area on this airplane configuration would be acceptable based on the limitations placed in this and other associated special conditions. These special conditions place sufficient restrictions in the quantity and type of material allowed in the overhead stowage compartment that threat from a fire in this remote area would be equivalent to that experienced on the main cabin.

If a built-in fire extinguishing system is used in lieu of manual fire fighting, then the fire extinguishing system must be designed so that no hazardous quantities of extinguishing agent will enter other compartments occupied by passengers or crew.

Proposed Special Condition No. 7, Compartment Design Criteria

The material used to construct the overhead stowage compartment must meet the flammability requirements for compartment interiors in § 25.853 and be fire resistant. Depending on the size of the compartment, certain fire protection features of Class B cargo compartments are also required. Enclosed stowage compartments equal to or exceeding 25 ft^3 in interior volume must be provided with a smoke or fire detection system to ensure that a fire can be detected within a one-minute detection time. This is the same requirement as has been applied to remote crew rest compartments.

Enclosed stowage compartments equal to or greater than 57 ft^3 in interior volume but less than or equal to 200 ft^3, must have a liner that meets the requirements of § 25.855 for a Class B cargo compartment. The overhead

stowage compartment may not be greater than 200 ft^3 in interior volume. The in-flight accessibility of very large enclosed stowage compartments and the subsequent impact on the crewmember's ability to effectively reach any part of the compartment with the contents of a handheld fire extinguisher would require additional fire protection considerations similar to those required for inaccessible compartments such as Class C cargo compartments.

The overhead stowage compartment smoke or fire detection and fire suppression systems (including airflow management features which prevent hazardous quantities of smoke or fire extinguishing agent from entering any other compartment occupied by crewmembers or passengers) is considered complex in terms of paragraph 6d of Advisory Circular (AC) 25.1309–1A, ''System Design and Analysis.'' The FAA considers failure of the overhead stowage compartment fire protection system (that is, smoke or fire detection and fire suppression systems) in conjunction with an overhead stowage fire to be a catastrophic event. Based on the ''Depth of Analysis Flowchart'' shown in Figure 2 of AC 25.1309–1A, the depth of analysis should include both qualitative and quantitative assessments (reference paragraphs 8d, 9, and 10 of AC 25.1309–1A).

The requirements to enable crewmember(s) quick access to the overhead stowage compartment and to locate a fire source inherently places limits on the amount of baggage stowed and the size of the overhead stowage compartment. The overhead stowage compartment is limited to stowage of galley type standard containers as well as coats, bags, and other items typically stowed in closets or bins. It is not intended to be used for the stowage of other items. The design of such a system to include other items may require additional special conditions to ensure safe operation.

Applicability

These amended proposed special conditions are applicable to the Boeing Model 777 series airplanes with overhead cross aisle stowage compartments. Should Boeing Commercial Airplane Group apply later for a change to the type certificate to include another model included on Type Certificate No. T00001SE, incorporating the same novel or unusual design feature, the special conditions would apply to that model as well under the provisions of § 21.101.

The Boeing Model 777 series airplane is scheduled for imminent delivery. Special conditions for other types of stowage compartments in remote areas of airplanes have been subject to the notice and public comment procedure in several prior instances. Therefore, because a delay would significantly affect the applicant's installation of the overhead cross aisle stowage compartment and certification of the airplane, we are shortening the public comment period to 10 days.

Conclusion

This action affects only certain novel or unusual design features on the Boeing Model 777 series airplanes. It is not a rule of general applicability and affects only the applicant who applied to the FAA for approval of these features on the airplane.

List of Subjects in 14 CFR Part 25

Aircraft, Aviation safety, Reporting and recordkeeping requirements.

The authority citation for these special conditions is as follows:

Authority: 49 U.S.C. 106(g), 40113, 44701, 44702, 44704.

The Amended Proposed Special Conditions

Accordingly, the Federal Aviation Administration (FAA) proposes the following special conditions as part of the type certification basis for Boeing Model 777 series airplanes. Each overhead cross aisle stowage compartment and the adjacent area, including the structural frame, mechanical system and drive motor, must meet the following requirements:

1. *Compartment Access and Placards.* There must be a means to prohibit or prevent passengers from entering or operating the overhead cross aisle stowage compartment. Placards prohibiting access are acceptable. If a compartment is large enough for a person to enter, there must be a means to preclude anyone from being trapped inside the stowage compartment. If a latching/locking mechanism is installed, the door must be capable of being opened from the outside without the aid of special tools. The mechanism must not prevent opening from the inside of the stowage at any time.

2. *Power Lift.* There must be a means such as a load or force limiter to protect the overhead cross aisle stowage compartment electrical lift drive system from failure or jamming in the down position in the event it is lowered on top of hard structure such as a galley cart.

(a) The electrical lift controls must be placed so the operator is clear of the lift and designed such that the controls must be pressed continuously for lift operation.

(b) The electrical lift must raise and lower the stowage compartment at a slow enough rate, and stop above the floor at such a height, that anyone underneath can easily move clear without injury.

(c) Stowage compartment operation training procedures must be added to the appropriate flight attendant manuals.

3. *Manual Lift.* There must be a means in the event of failure of the aircraft's main power system, or of the electrically powered overhead cross aisle stowage compartment lift system, for manually activating the lift system.

(a) This manual means must be independent of the electrical drive system.

(b) The manual means must be accessible and operable by a range of occupants, including a fifth percentile female.

(c) The manual means must be capable of lowering the stowage compartment to the main deck quickly enough to fight a fire in the stowage compartment before overhead cross aisle stowage compartment fire containment is compromised.

(d) The manual means must be capable of quickly raising the stowage compartment such that the cross aisle, or other egress path is not blocked in the event of an emergency.

(e) Stowage compartment firefighting training procedures must be added to the appropriate flight attendant manuals.

(f) The lift system must include a means, such as a brake, to retain the overhead cross aisle stowage compartment in any position of travel when the manual or electric drive force is removed.

4. *Fire Extinguisher.* The means to manually fight a fire in the overhead cross aisle stowage compartment must consider the additional stowage volume and time required to manually lower the compartment after indication. For compartments larger than 25 ft^3 the following equipment must be provided directly adjacent to each overhead cross aisle stowage compartment: at least one approved handheld fire extinguisher, in addition to the fire extinguisher requirements of § 25.851 and § 121.309, appropriate for the kinds of fires likely to occur within the overhead stowage compartment.

5. *Fire Containment.* Fires originating within the overhead cross aisle stowage compartment must be controlled for the duration of the flight without a crewmember having to access the

compartment. Alternatively, the design of the access provisions must allow crewmembers equipped for firefighting to have unrestricted access to the compartment. If the latter approach is elected it must be demonstrated that a crewmember has sufficient access to enable them to extinguish a fire. The time for a crewmember on the main deck to react to the fire alarm, (and, if applicable, to don the firefighting equipment and to open the compartment) must not exceed the flammability and fire containment capabilities of the stowage compartment.

6. *Smoke Penetration.* There must be a means provided to exclude hazardous quantities of smoke or extinguishing agent originating in the overhead cross aisle stowage compartment from entering any other compartment occupied by crewmembers or passengers. If access is required to comply with Special Condition 5, this means must include the time period when accessing the stowage compartment to manually fight a fire. Smoke entering any other compartment occupied by crewmembers or passengers, when access to the stowage compartment is opened to manually fight a fire, must dissipate within five minutes after the access to the stowage compartment is closed. Prior to the one minute smoke detection time (reference note 2 in paragraph (7)) penetration of a small quantity of smoke from the stowage compartment into an occupied area is acceptable. Flight tests must be conducted to show compliance with this requirement.

7. *Compartment Design Criteria.* The overhead cross aisle stowage compartment must be designed to minimize the hazards to the airplane in the event of a fire originating in the stowage compartment.

(a) *Fire Extinguishing System.* If a built-in fire extinguishing system is used in lieu of manual firefighting, then the fire extinguishing system must be designed so no hazardous quantities of extinguishing agent will enter other compartments occupied by passengers or crew. The system must have adequate capacity to suppress any fire occurring in the stowage compartment, considering the fire threat, volume of the compartment, and the ventilation rate.

(b) *Compartment Size.* All overhead cross aisle stowage compartments must meet the design criteria given in the table below. As indicated by the table below, enclosed stowage compartments greater than 200 ft^3 in interior volume are not addressed by this special condition.

Stowage compartment interior volumes	Fire protection features		
	Less than 25 ft^3	25 ft^3 to 57 ft^3	57 ft^3 to 200 ft^3
Materials of Construction [1]	Yes	Yes	Yes.
Detectors [2]	No	Yes	Yes.
Liner [3]	No	Yes	Yes.

[1] *Material:* The material used to construct each enclosed stowage compartment must be at least fire resistant and must meet the flammability standards established for interior components (that is, 14 CFR Part 25 Appendix F, Parts I, IV, and V) per the requirements of § 25.853. For compartments less than 25 ft^3 in total interior volume, the design must ensure the ability to contain a fire likely to occur within the compartment under normal use.

[2] *Detectors:* Enclosed stowage compartments equal to or exceeding 25 ft^3 in total interior volume must be provided with a smoke or fire detection system to ensure that a fire can be detected within one minute. Flight tests must be conducted to show compliance with this requirement. Each system (or systems) must provide:

(a) A visual indication in the flight deck within one minute after the start of a fire;

(b) A warning in the main passenger cabin. This warning must be readily detectable by a flight attendant, taking into consideration the positioning of flight attendants throughout the main passenger compartment during various phases of flight.

[3] *Liner:* If it can be shown the material used to construct the stowage compartment meets the flammability requirements of a liner for a Class B cargo compartment (that is, § 25.855 at Amendment 25–93 and Appendix F, part I, paragraph (a)(2)(ii)), in addition to the above [1] *Material requirement*, then no liner would be required for enclosed stowage compartments equal to or greater than 25 ft^3 in total interior volume but less than 57 ft^3 in total interior volume. For all enclosed stowage compartments equal to or greater than 57 ft^3 in total interior volume but less than or equal to 200 ft^3, a liner must be provided that meets the requirements of § 25.855 for a Class B cargo compartment.

Issued in Renton, Washington, on October 26, 2006.

Kalene C. Yanamura,

Acting Manager, Transport Airplane Directorate, Aircraft Certification Service.

[FR Doc. 06–9025 Filed 10–30–06; 1:07 pm]

BILLING CODE 4910–13–P

DEPARTMENT OF TRANSPORTATION

Federal Aviation Administration

14 CFR Part 39

[Docket No. FAA–2006–26217; Directorate Identifier 2006–NM–209–AD]

RIN 2120–AA64

Airworthiness Directives; Bombardier Model DHC–8–400 Series Airplanes

AGENCY: Federal Aviation Administration (FAA), Department of Transportation (DOT).

ACTION: Notice of proposed rulemaking (NPRM).

SUMMARY: The FAA proposes to adopt a new airworthiness directive (AD) for certain Bombardier Model DHC–8–400 series airplanes. This proposed AD would require revising the Airworthiness Limitations Items (ALI) of the maintenance requirements manual to require additional inspection requirements of the maintenance requirements manual for certain principal structural elements (PSEs) related to fuselage cutouts and to reduce an inspection threshold for an existing ALI task on the aft entry door. This proposed AD results from data obtained from the manufacturer's fatigue testing. We are proposing this AD to detect and correct fatigue cracking of certain PSEs, which could result in reduced structural integrity of the airplane.

DATES: We must receive comments on this proposed AD by December 4, 2006.

ADDRESSES: Use one of the following addresses to submit comments on this proposed AD.

- *DOT Docket Web site:* Go to *http://dms.dot.gov* and follow the instructions for sending your comments electronically.
- *Government-wide rulemaking Web site:* Go to *http://www.regulations.gov* and follow the instructions for sending your comments electronically.
- *Mail:* Docket Management Facility, U.S. Department of Transportation, 400 Seventh Street, SW., Nassif Building, room PL–401, Washington, DC 20590.
- *Fax:* (202) 493–2251.
- *Hand Delivery:* Room PL–401 on the plaza level of the Nassif Building, 400 Seventh Street, SW., Washington, DC, between 9 a.m. and 5 p.m., Monday through Friday, except Federal holidays.

Contact Bombardier, Inc., Bombardier Regional Aircraft Division, 123 Garratt Boulevard, Downsview, Ontario M3K 1Y5, Canada, for the service information identified in this proposed AD.

FOR FURTHER INFORMATION CONTACT: George Duckett, Aerospace Engineer, Airframe and Propulsion Branch, ANE–171, FAA, New York Aircraft Certification Office, 1600 Stewart Avenue, suite 410, Westbury, New York 11590; telephone (516) 228–7325; fax (516) 794–5531.

SUPPLEMENTARY INFORMATION:

Comments Invited

We invite you to submit any relevant written data, views, or arguments regarding this proposed AD. Send your comments to an address listed in the **ADDRESSES** section. Include the docket number ''FAA–2006–26217; Directorate Identifier 2006–NM–209–AD'' at the beginning of your comments. We specifically invite comments on the overall regulatory, economic, environmental, and energy aspects of the proposed AD. We will consider all comments received by the closing date and may amend the proposed AD in light of those comments.

We will post all comments we receive, without change, to *http://dms.dot.gov*, including any personal information you provide. We will also post a report summarizing each substantive verbal contact with FAA personnel concerning this proposed AD. Using the search function of that Web site, anyone can find and read the comments in any of our dockets, including the name of the individual who sent the comment (or signed the comment on behalf of an association, business, labor union, etc.). You may review the DOT's complete Privacy Act Statement in the **Federal Register** published on April 11, 2000 (65 FR 19477–78), or you may visit *http://dms.dot.gov.*

Examining the Docket

You may examine the AD docket on the Internet at *http://dms.dot.gov*, or in person at the Docket Management Facility office between 9 a.m. and 5 p.m., Monday through Friday, except Federal holidays. The Docket Management Facility office (telephone (800) 647–5227) is located on the plaza level of the Nassif Building at the DOT street address stated in the **ADDRESSES** section. Comments will be available in the AD docket shortly after the Docket Management System receives them.

Discussion

Transport Canada Civil Aviation (TCCA), which is the airworthiness authority for Canada, notified us that an unsafe condition may exist on certain Bombardier Model DHC–8–400 series airplanes. TCCA advises that results from data obtained from the manufacturer's fatigue testing for cracking require new additional inspection requirements for certain principal structural elements (PSEs) related to fuselage cutouts, and a reduced inspection threshold for an existing ALI task on the aft entry door. Fatigue cracking of certain PSEs, if not corrected, could result in reduced structural integrity of the airplane.

Relevant Service Information

Bombardier has issued Temporary Revisions ALI–53, dated February 16, 2006, and ALI–54, dated March 27, 2006, to the Airworthiness Limitations Items (ALI), Part 2, Section 2, of the Bombardier Q400 Dash 8 Maintenance Requirements Manual, PSM 1–84–7. The TRs describe additional inspection requirements for principal structural elements (PSEs) related to fuselage cutouts and revise an existing ALI task on the aft entry door with a reduced threshold inspection. Accomplishing the actions specified in the service information is intended to adequately address the unsafe condition. TCCA mandated the service information and issued Canadian airworthiness directive CF–2006–10, dated May 12, 2006, to ensure the continued airworthiness of these airplanes in Canada.

FAA's Determination and Requirements of the Proposed AD

This airplane model is manufactured in Canada and is type certificated for operation in the United States under the provisions of section 21.29 of the Federal Aviation Regulations (14 CFR 21.29) and the applicable bilateral airworthiness agreement. Pursuant to this bilateral airworthiness agreement, the TCCA has kept the FAA informed of the situation described above. We have examined the TCCA's findings, evaluated all pertinent information, and determined that we need to issue an AD for certain Bombardier Model DHC–8–400 series airplanes of this type design that are certificated for operation in the United States.

Therefore, we are proposing this AD, which would require accomplishing the actions specified in the Temporary Revisions described previously.

Costs of Compliance

This proposed AD would affect about 21 airplanes of U.S. registry. The proposed actions would take about 1 work hour per airplane, at an average labor rate of $80 per work hour. Based on these figures, the estimated cost of the proposed AD for U.S. operators is $1,680, or $80 per airplane.

Authority for This Rulemaking

Title 49 of the United States Code specifies the FAA's authority to issue rules on aviation safety. Subtitle I, section 106, describes the authority of the FAA Administrator. Subtitle VII, Aviation Programs, describes in more detail the scope of the Agency's authority.

We are issuing this rulemaking under the authority described in subtitle VII, part A, subpart III, section 44701, ''General requirements.'' Under that section, Congress charges the FAA with promoting safe flight of civil aircraft in air commerce by prescribing regulations for practices, methods, and procedures the Administrator finds necessary for safety in air commerce. This regulation is within the scope of that authority because it addresses an unsafe condition that is likely to exist or develop on products identified in this rulemaking action.

Regulatory Findings

We have determined that this proposed AD would not have federalism implications under Executive Order 13132. This proposed AD would not have a substantial direct effect on the States, on the relationship between the national Government and the States, or on the distribution of power and responsibilities among the various levels of government.

For the reasons discussed above, I certify that the proposed regulation:

1. Is not a ''significant regulatory action'' under Executive Order 12866;

2. Is not a ''significant rule'' under the DOT Regulatory Policies and Procedures (44 FR 11034, February 26, 1979); and

3. Will not have a significant economic impact, positive or negative, on a substantial number of small entities under the criteria of the Regulatory Flexibility Act.

We prepared a regulatory evaluation of the estimated costs to comply with this proposed AD and placed it in the AD docket. See the **ADDRESSES** section for a location to examine the regulatory evaluation.

List of Subjects in 14 CFR Part 39

Air transportation, Aircraft, Aviation safety, Safety.

The Proposed Amendment

Accordingly, under the authority delegated to me by the Administrator, the FAA proposes to amend 14 CFR part 39 as follows:

PART 39—AIRWORTHINESS DIRECTIVES

1. The authority citation for part 39 continues to read as follows:

Authority: 49 U.S.C. 106(g), 40113, 44701.

§ 39.13 [Amended]

2. The Federal Aviation Administration (FAA) amends § 39.13 by adding the following new airworthiness directive (AD):

Bombardier, Inc. (Formerly de Havilland, Inc.): Docket No. FAA–2006–26217; Directorate Identifier 2006–NM–209–AD.

Comments Due Date

(a) The FAA must receive comments on this AD action by December 4, 2006.

Affected ADs

(b) None.

Applicability

(c) This AD applies to certain Bombardier Model DHC–8–400 series airplanes, serial numbers 4001, 4003, 4004, 4006, and 4008 through 4126 inclusive, certificated in any category.

Unsafe Condition

(d) This AD results from data obtained from the manufacturer's fatigue testing. We are issuing this AD to detect and correct fatigue cracking of certain principal structural elements (PSEs), which could result in reduced structural integrity of the airplane.

Compliance

(e) You are responsible for having the actions required by this AD performed within the compliance times specified, unless the actions have already been done.

Note 1: This AD requires revisions to certain operator maintenance documents to include new inspections. Compliance with these inspections is required by 14 CFR 91.403(c). For airplanes that have been previously modified, altered, or repaired in the areas addressed by these inspections, the operator may not be able to accomplish the inspections described in the revisions. In this situation, to comply with 14 CFR 91.403(c), the operator must request approval for an alternative method of compliance according to paragraph (g) of this AD. The request should include a description of changes to the required inspections that will ensure the continued damage tolerance of the affected structure. The FAA has provided guidance for this determination in Advisory Circular (AC) 25–1529–1.

Maintenance Requirements Manual Revision

(f) Within 60 days after the effective date of this AD, revise the Airworthiness Limitations Items (ALI), Part 2, Section 2, of the Bombardier Q400 Dash 8 Maintenance Requirements Manual, PSM 1–84–7, by incorporating the information in Bombardier Temporary Revisions (TR) ALI–53, dated February 16, 2006, and ALI–54, dated March 27, 2006. Thereafter, except as provided in paragraph (g) of this AD, no alternative structural inspection intervals may be approved for the fuselage and doors as specified in the TRs.

Note 2: The actions required by paragraph (f) of this AD may be done by inserting copies of TR ALI–53, dated February 16, 2006, and TR ALI–54, dated March 27, 2006; into the ALI, Part 2, Section 2, of the Bombardier Q400 Dash 8 Maintenance Requirements Manual, PSM 1–84–7. When TRs ALI–53 and ALI–54 have been included in the general revisions of the maintenance requirements manual, the general revisions may be inserted into the maintenance requirements manual, provided the relevant information in the general revision is identical to that in TRs ALI–53 and ALI–54.

Alternative Methods of Compliance (AMOCs)

(g)(1) The Manager, New York Aircraft Certification Office (ACO), FAA, has the authority to approve AMOCs for this AD, if requested in accordance with the procedures found in 14 CFR 39.19.

(2) Before using any AMOC approved in accordance with § 39.19 on any airplane to which the AMOC applies, notify the appropriate principal inspector in the FAA Flight Standards Certificate Holding District Office.

Related Information

(h) Canadian airworthiness directive CF–2006–10, dated May 12, 2006, also addresses the subject of this AD.

Issued in Renton, Washington, on October 25, 2006.

Kalene C. Yanamura,

Acting Manager, Transport Airplane Directorate, Aircraft Certification Service.

[FR Doc. E6–18461 Filed 11–1–06; 8:45 am]

BILLING CODE 4910–13–P

DEPARTMENT OF TRANSPORTATION

Federal Aviation Administration

14 CFR Part 39

[Docket No. FAA–2006–26219; Directorate Identifier 2004–SW–49–AD]

RIN 2120–AA64

Airworthiness Directives; Bell Helicopter Textron Model 204B, 205A, 205A–1, 205B, 210, 212, 412, 412CF, and 412EP Helicopters

AGENCY: Federal Aviation Administration, DOT.

ACTION: Notice of proposed rulemaking (NPRM).

SUMMARY: This document proposes adopting a new airworthiness directive (AD) for Bell Helicopter Textron (Bell) Model 204B, 205A, 205A–1, 205B, 210, 212, 412, 412CF, and 412EP helicopters. The AD would require certain checks and inspections of each tail rotor blade assembly (T/R blade) at specified intervals and repairing or replacing, as applicable, any unairworthy T/R blade. This proposal is prompted by eight reports of T/R blade failures. The actions specified by the proposed AD are intended to prevent failure of a T/R blade and subsequent loss of control of the helicopter.

DATES: Comments must be received on or before January 2, 2007.

ADDRESSES: Use one of the following addresses to submit comments on this proposed AD:

- *DOT Docket Web site:* Go to *http://dms.dot.gov* and follow the instructions for sending your comments electronically;
- *Government-wide rulemaking Web site:* Go to *http://www.regulations.gov* and follow the instructions for sending your comments electronically;
- *Mail:* Docket Management Facility; U.S. Department of Transportation, 400 Seventh Street, SW., Nassif Building, Room PL–401, Washington, DC 20590;
- *Fax:* 202–493–2251; or
- *Hand Delivery:* Room PL–401 on the plaza level of the Nassif Building, 400 Seventh Street, SW., Washington, DC, between 9 a.m. and 5 p.m., Monday through Friday, except Federal holidays.

You may get the service information identified in this proposed AD from Bell Helicopter Textron, Inc., P.O. Box 482, Fort Worth, Texas 76101, telephone (817) 280–3391, fax (817) 280–6466.

You may examine the comments to this proposed AD in the AD docket on the Internet at *http://dms.dot.gov.*

FOR FURTHER INFORMATION CONTACT: Michael Kohner, Aviation Safety Engineer, FAA, Rotorcraft Directorate, Rotorcraft Certification Office, Fort Worth, Texas 76193–0170, telephone (817) 222–5447, fax (817) 222–5783.

SUPPLEMENTARY INFORMATION:

Comments Invited

We invite you to submit any written data, views, or arguments regarding this proposed AD. Send your comments to the address listed under the caption **ADDRESSES**. Include the docket number ''FAA–2006–26219, Directorate Identifier 2004–SW–49–AD'' at the beginning of your comments. We specifically invite comments on the overall regulatory, economic, environmental, and energy aspects of the proposed AD. We will consider all comments received by the closing date and may amend the proposed AD in light of those comments.

We will post all comments we receive, without change, to *http://dms.dot.gov*, including any personal information you provide. We will also

post a report summarizing each substantive verbal contact with FAA personnel concerning this proposed rulemaking. Using the search function of our docket Web site, you can find and read the comments to any of our dockets, including the name of the individual who sent or signed the comment. You may review the DOT's complete Privacy Act Statement in the **Federal Register** published on April 11, 2000 (65 FR 19477–78) or you may visit *http://dms.dot.gov.*

Examining the Docket

You may examine the docket that contains the proposed AD, any comments, and other information in person at the Docket Management System (DMS) Docket Office between 9 a.m. and 5 p.m., Monday through Friday, except Federal holidays. The Docket Office (telephone 1–800–647–5227) is located at the plaza level of the Department of Transportation NASSIF Building in Room PL–401 at 400 Seventh Street, SW., Washington, DC. Comments will be available in the AD docket shortly after the DMS receives them.

Discussion

There have been eight reported failures due to fatigue cracking of T/R blades installed on Bell Model 212 and 412 helicopters (three failures on the Bell Model 212 and five failures on the Bell Model 412) with a blade assembly part number (P/N) 212–010–750–009, –105, and –107. Six of the cracks initiated between blade stations 30 to 33.5; one crack initiated at blade station 21.9; and one crack initiated at blade station 27.6. Three of the failures were in-flight and the T/R blades were installed on Bell Model 412 series helicopters. In one of the in-flight failures, the T/R blade failed due to a fatigue crack that initiated in the blade skin from a nick .060 inches long by .008 inches deep. The initial damage was above the maximum allowable damage limit for the blade skin provided in the maintenance manual. That failed blade had accumulated 1,478 hours time-in-service (TIS). In another in-flight failure, a section of the T/R blade separated from the helicopter during cruise flight at 5,500 feet. The helicopter was reported to have violently turned down and to the left. The helicopter ''leveled out'' at approximately 1,000 feet before setting down in the water. The blade failed due to a cracked stainless steel leading edge spar that originated from a corrosion pit .001 inches deep. The corrosion area extended .003 inches along the surface of the origin location.

That blade had accumulated 4,643 hours TIS. In the third in-flight failure, sanding on the spar and chem-milling was found during a post-accident investigation. The crack had initiated at blade station 21.9 and the blade had accumulated 1,232 hours TIS. Also, the following blades were found cracked during an inspection:

Model	Year	P/N 212–010–750–	Hours TIS	Blade station (in.)	Crack length (in)	Initial damage part and type	Initial damage size
212	1973	–009	3,224	32.2	6.5	Skin—Corrosion	.030 in. wide.
212	1985	–009	279	31.5	13.0	Spar—Manufacturing Notch.	.090 in. wide.
212	1991	–105	423	30.8	8.0	Skin—Non Sharp Dent	.75 in. long.
412	1990	–009	3,876	27.6	8.0	Skin—Corrosion	Unknown.
412	1996	–105	1,235	30.0	8.3	Skin—Scratch	.45 in. long by .005 in. deep.

A preliminary investigation after one of the in-flight blade failures indicated that the operator (Canadian Department of Defense) was not using any specific inspection methods to detect small-scale damage on the T/R blades as required by the maintenance manual. A daily inspection was being conducted from the ground with the tail rotor mounted over 10 feet off of the ground. Inquiries to other Model 212 and 412 helicopter operators indicate that some of them are not accomplishing adequate inspections either. The accident investigation team concluded that without a detailed visual inspection, the probability of detection is extremely low for the kind of damage and fatigue crack that results from the tail rotor design and usage.

The Canadian Department of Defense now uses a 12.5-hour inspection interval for the detailed visual inspection using a 2-power magnifying glass for the T/R blades on their Model 412CF helicopters. This interval was implemented as a result of a risk assessment performed for the T/R blade failure. If damage is suspected, this is followed by a 10-power magnifying glass and appropriate measuring tools (i.e. optical micrometer). The striation count for the failed blade indicates a crack propagation rate of approximately 77 hours TIS from damage initiation to blade failure.

We have determined that:

- The T/R blades are susceptible to impact damage from outside sources (gravel, stone, hail, etc.). The impact damage is the originating point for initiating fatigue cracks with subsequent growth until the blade fails from overload on the remaining intact structure;
- Fatigue cracks have also initiated from corrosion and corrosion pits;
- Model 205A, 205A–1, and certain 204B helicopters with the same part-numbered T/R blades as those installed on Model 212 and 412 helicopters should be included in this proposed AD; and
- Model 205B and 210 helicopters with the same type-designed T/R blades as those installed on Model 212 and 412 helicopters should also be included in this proposed AD.

We have reviewed the following Bell documents:

- Operations Safety Notice OSN 205–02–37, OSN 205B–02–10, OSN 212–02–39, OSN 412–02–25, OSN 412CF–02–05, and OSN UH–1H–II–02–3, dated August 27, 2002. That Operations Safety Notice applies to all owners and operators of Bell 205, 205B, 212, 412, 412CF, and UH–1H–II helicopters and was written to remind operators of the following:
- The importance of accomplishing a complete inspection of the T/R blades at specified inspection intervals;
- That the blades must be cleaned in order to perform an adequate visual inspection to determine their condition; and
- That maintenance manuals and component repair and overhaul manuals are to be consulted for damage limits and repair criteria as required.
- Alert Service Bulletin No. 412CF–03–20, dated February 6, 2003, which applies to Model 412CF helicopters and provides instructions for doing a visual inspection of certain T/R blades immediately and every 25 hours TIS in accordance with Model 412CF maintenance manual and instructions for sending the affected tail rotor blade

to DND ''Calgary Supply Center'' for refinishing and reidentification.

• Bell Maintenance Document C–12–146–000/MF–001, Mod 4, dated February 12, 2004, which applies to Model 412CF helicopters and specifies a tail rotor blade damage records check and a visual inspection for dents, nicks, cracks, paint chips, or blisters using a 2-power magnifying glass and a good source of light in specified areas of the tail rotor blades (reference 64–00–00, section 64–38, page 42).

This unsafe condition is likely to exist or develop on other helicopters of the same type designs. Therefore, the proposed AD would require the following actions:

• Before each start of the engines, visually checking each T/R blade for a crack;

• Within 25 hours TIS or 15 days, whichever occurs first, and thereafter at intervals not to exceed 25 hours TIS or 15 days, whichever occurs first, cleaning and visually inspecting each T/R blade for a crack, corrosion, nick, scratch, or dent using a 3-power or higher magnifying glass and a bright light;

• If certain damage is found, inspecting for a crack or corrosion using a 10-power or higher magnifying glass and measuring the depth of any damage; and

• Before further flight, replacing any cracked T/R blade and repairing or replacing any otherwise unairworthy T/R blade.

The requirements of the proposed AD would be interim actions until either a more rigorous inspection is developed or a new blade that is more damage tolerant is designed. The manufacturer is currently considering a redesign of these T/R blades.

We estimate that this proposed AD would affect 388 helicopters of U.S. registry. There are approximately 184 Model 205A and 205A–1 helicopters, 8 Model 205B helicopters, 101 Model 212 helicopters, 80 Model 412, 412CF, and 412EP helicopters, and 15 modified Model 204B helicopters. Each visual check would take .125 hours, each visual inspection would take .5 hours, and 6 hours to remove and replace each T/R blade assembly, if necessary. The average labor rate is $80. Replacement parts would cost $11,243 for each T/R blade assembly. Based on these figures, the estimated cost impact of the proposed AD for all of the affected models would be $1,847,295 assuming an average of 600 hours TIS per year for each helicopter resulting in 365 visual checks, 24 inspections, and 5 T/R blade assembly replacements for the total fleet.

Regulatory Findings

We have determined that this proposed AD would not have federalism implications under Executive Order 13132. Additionally, this proposed AD would not have a substantial direct effect on the States, on the relationship between the national Government and the States, or on the distribution of power and responsibilities among the various levels of government.

For the reasons discussed above, I certify that the proposed regulation:

1. Is not a ''significant regulatory action'' under Executive Order 12866;

2. Is not a ''significant rule'' under the DOT Regulatory Policies and Procedures (44 FR 11034, February 26, 1979); and

3. Will not have a significant economic impact, positive or negative, on a substantial number of small entities under the criteria of the Regulatory Flexibility Act.

We prepared a draft economic evaluation of the estimated costs to comply with this proposed AD. See the DMS to examine the draft economic evaluation.

Authority for This Rulemaking

Title 49 of the United States Code specifies the FAA's authority to issue rules on aviation safety. Subtitle I, section 106, describes the authority of the FAA Administrator. Subtitle VII, Aviation Programs, describes in more detail the scope of the Agency's authority.

We are issuing this rulemaking under the authority described in subtitle VII, part A, subpart III, section 44701, ''General requirements.'' Under that section, Congress charges the FAA with promoting safe flight of civil aircraft in air commerce by prescribing regulations for practices, methods, and procedures the Administrator finds necessary for safety in air commerce. This regulation is within the scope of that authority because it addresses an unsafe condition that is likely to exist or develop on products identified in this rulemaking action.

List of Subjects in 14 CFR Part 39

Air transportation, Aircraft, Aviation safety, Safety.

The Proposed Amendment

Accordingly, pursuant to the authority delegated to me by the Administrator, the Federal Aviation Administration proposes to amend part 39 of the Federal Aviation Regulations (14 CFR part 39) as follows:

PART 39—AIRWORTHINESS DIRECTIVES

1. The authority citation for part 39 continues to read as follows:

Authority: 49 U.S.C. 106(g), 40113, 44701.

§ 39.13 [Amended]

2. Section 39.13 is amended by adding a new airworthiness directive to read as follows:

Bell Helicopter Textron: Docket No. FAA–2006–26219; Directorate Identifier 2004–SW–49–AD.

Applicability

The following model helicopters, with the specified tail rotor blade assembly (T/R blade) installed, certificated in any category:

Helicopter model	With T/R blade assembly, part number (P/N)
204B	212–010–750–009, –105, or –113.
205A and 205A–1.	212–010–750–009, –105, or –113.
205B	212–010–750–109, –111, –117, –125, or –135 212–015–501–115 or –121.
210	212–010–001–101.
212	212–010–750–009, –105, or –113.
412	212–010–750–009, –011, –105, –107, –113, or –115.
412CF	212–010–750–009, –011, –105, –107, –113, or –115.
412EP	212–010–750–009, –011, –105, –107, –113, or –115.

Compliance

Required as indicated.

To prevent failure of a T/R blade and subsequent loss of control of the helicopter, accomplish the following:

(a) Before each start of the engines, visually check both sides of each T/R blade for a crack. An owner/operator (pilot) holding at least a private pilot certificate may perform this visual check and must enter compliance with this paragraph into the aircraft maintenance records in accordance with 14 CFR 43.11 and 91.417(a)(2)(v).

(b) Within 25 hours time-in-service (TIS) or 15 days, whichever occurs first, unless accomplished previously, and thereafter at intervals not to exceed 25 hours TIS or 15 days, whichever occurs first:

(1) Clean each T/R blade by hand using a mild degreaser and water to remove soot and grime on both sides of the blade using a coarse, loosely woven cotton cloth in a spanwise direction. Use a cloth with a color that contrasts with the color of the T/R blade so that a snag will be visible.

(2) Using a 3-power or higher magnifying glass and a bright light, visually inspect the T/R blade skins, leading edge spar, doublers, grip plates, and trailing edge for a crack, corrosion (may be indicated by blistering, peeling, flaking, bubbling, or cracked paint) and any other damage (including a nick, scratch, or dent). See Figure 1 of this AD. Pay particular attention to both sides of the T/R

blade in the area located 10 to 25 inches from the T/R blade tip (blade station 26 to 41—the T/R blade tip is located at blade station 51). Also pay particular attention to any blade surface that was snagged by the cloth, as that may be an indication of a crack or paint chip that could lead to corrosion.

1. Pitch Horn Blade Bolts.
2. Blade Grip Bolt Holes.
3. External Balance Weights.
4. Doubler.
5. Trailing Edge.
6. Skin.
7. Honeycomb Core.
8. Tip Block.
9. Balance Screws.
10. Spar.
11. Grip Plate.
12. Drain Hole Doubler.
13. Butt Block.
14. Inner Grip Plate.
15. Tip Closure.

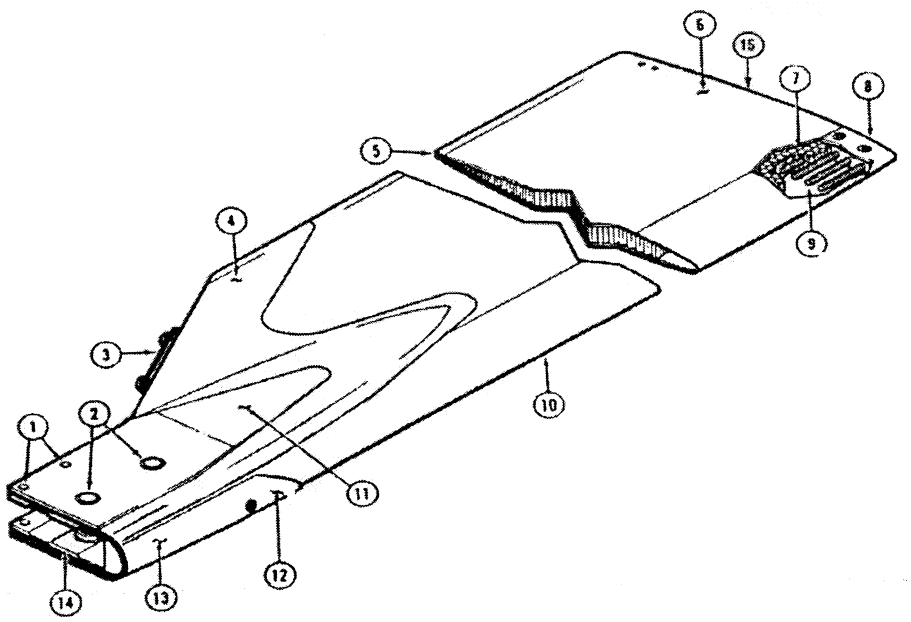

T/R Blade Assembly
Figure 1

(3) If any blistering, peeling, flaking, bubbling, or cracked paint is detected, remove the paint from the affected area and visually inspect the affected area for corrosion or a crack using a 10-power or higher magnifying glass. If any corrosion is found, measure the depth of the corrosion (a digital optical micrometer is one tool that can be used for this measurement).

(4) If a nick, scratch, or dent is found, visually inspect for a crack using 10-power or higher magnifying glass and measure the depth of the damage (a digital optical micrometer is one tool that can be used for this measurement).

(c) Before further flight:

(1) Replace any T/R blade that has a crack with an airworthy blade.

(2) Replace any T/R blade that has any corrosion, nick, scratch, dent, or other damage that exceeds any maximum repair limit with an airworthy blade.

Note 1: The maximum repair limits are specified in the applicable maintenance manual.

(3) Repair or replace with an airworthy blade any T/R blade that has any corrosion, nick, scratch, dent or other damage that is within the maximum repair limits.

Note 2: The repair procedures are specified in the applicable maintenance manual and component repair and overhaul manuals.

(d) To request a different method of compliance or a different compliance time for this AD, follow the procedures in 14 CFR 39.19. Contact the Manager, Rotorcraft Certification Office, Rotorcraft Directorate, FAA, *Attn:* Michael Kohner, Aviation Safety Engineer, Fort Worth, Texas 76193–0170, telephone (817) 222–5447, fax (817) 222–5783, for information about previously approved alternative methods of compliance.

Issued in Fort Worth, Texas, on October 26, 2006.

Mark R. Schilling,

Acting Manager, Rotorcraft Directorate, Aircraft Certification Service.

[FR Doc. E6–18462 Filed 11–1–06; 8:45 am]

BILLING CODE 4910–13–P

DEPARTMENT OF THE TREASURY

Internal Revenue Service

26 CFR Parts 1, 20, 25, 31, 53, 54, and 56

[REG–103038–05]

RIN 1545–BE24

AJCA Modifications to the Section 6011 Regulations

AGENCY: Internal Revenue Service (IRS), Treasury.

ACTION: Notice of proposed rulemaking by cross-reference to temporary regulations.

SUMMARY: This document contains proposed regulations under section 6011 of the Internal Revenue Code that modify the rules relating to the disclosure of reportable transactions under section 6011. These regulations affect taxpayers participating in reportable transactions under section 6011, material advisors responsible for disclosing reportable transactions under section 6111, and material advisors responsible for keeping lists under section 6112.

DATES: Written or electronic comments and requests for a public hearing must be received by January 31, 2007.

ADDRESSES: Send submissions to: CC:PA:LPD:PR (REG–103038–05), room 5203, Internal Revenue Service, PO Box 7604, Ben Franklin Station, Washington, DC 20044. Submissions may be hand delivered Monday through Friday between the hours of 8 a.m. and 4 p.m. to CC:PA:LPD:PR (REG–103038–05), Courier's Desk, Internal Revenue Service, Crystal Mall 4 Building, 1901 S. Bell St., Arlington, VA, or sent electronically, via the IRS Internet site at *http://www.irs.gov/regs* or via the Federal eRulemaking Portal at *www.regulations.gov* (indicate IRS and REG–103038–05).

FOR FURTHER INFORMATION CONTACT: Concerning the proposed regulations, Tara P. Volungis or Charles Wien, 202–622–3070; concerning the submissions of comments and requests for hearing, Kelly Banks, 202–622–0392 (not toll-free numbers).

SUPPLEMENTARY INFORMATION:

Background

This document proposes to amend 26 CFR part 1 by modifying and clarifying the rules relating to the disclosure of reportable transactions under section 6011. This document also proposes to amend 26 CFR parts 20, 25, 31, 53, 54, and 56 by modifying the rules for purposes of estate, gift, employment, and pension and exempt organizations excise taxes that require the disclosure of listed transactions by certain taxpayers on their Federal tax returns under section 6011.

On February 28, 2003, the IRS issued final regulations under sections 6011, 6111, and 6112 (TD 9046) (the February 2003 regulations). The February 2003 regulations were published in the **Federal Register** (68 FR 10161) on March 4, 2003. On December 29, 2003, the IRS issued final regulations under section 6011 and 6112 (TD 9108) (the December 2003 regulations). The December 2003 regulations were published in the **Federal Register** (68 FR 75128) on December 30, 2003.

Since the publication of the February 2003 regulations and the December 2003 regulations, the American Jobs Creation Act of 2004, Public Law 108–357, 118 Stat. 1418, (AJCA) was enacted on October 22, 2004. The AJCA revised sections 6111 and 6112, thereby necessitating changes to the rules under section 6011. The IRS and Treasury Department also have received various comments and questions regarding the rules under § 1.6011–4. Consequently, the IRS and Treasury Department are proposing modifications to the rules regarding the disclosure of reportable transactions under § 1.6011–4.

It should be noted that section 516 of the Tax Increase Prevention and Reconciliation Act of 2005, Public Law 109–222, 120 Stat. 345, (TIPRA), enacted on May 17, 2006, includes new excise taxes that target prohibited tax shelter transactions to which a tax-exempt entity is a party. Prohibited tax shelter transactions consist of listed transactions, confidential transactions, and transactions with contractual protection under section 6011. TIPRA also contains new disclosure requirements, which apply not only to tax-exempt entities but also to taxable entities that are parties to prohibited tax shelter transactions involving tax-exempt entities, and makes penalties applicable for failure to comply with each new disclosure requirement. The IRS and Treasury Department will issue separate guidance regarding the disclosure provision in TIPRA.

Explanation of Provisions

A. Removal of Transactions With a Significant Book-Tax Difference

Under the current regulations in § 1.6011–4, there are six categories of reportable transactions. In accordance with the interim guidance provided in Notice 2006–6, 2006–5 I.R.B. 385, these proposed regulations eliminate the *transactions with a significant book-tax difference* category of reportable transaction that is in § 1.6011–4(b)(6). The IRS and Treasury Department have determined that this category of reportable transaction is no longer necessary due to the issuance of the Schedule M–3, ''Net Income (Loss) Reconciliation for Corporations With Total Assets of $10 Million or More'', which now provides the IRS a more complete disclosure of book-tax differences for corporations. The Schedule M–3 reporting requirements will be extended to partnerships and S corporations. The removal of the book-tax difference category applies to transactions that otherwise would have to have been disclosed on or after January 6, 2006 (regardless of when the transaction was entered into).

B. Transactions of Interest

The IRS and Treasury Department are proposing as a new category of reportable transaction the *transactions of interest* reportable transaction. A transaction of interest is a transaction that the IRS and Treasury Department believe has a potential for tax avoidance or evasion, but for which the IRS and Treasury Department lack enough information to determine whether the transaction should be identified specifically as a tax avoidance transaction. Transactions of interest will be identified in published guidance. When the IRS and Treasury Department have gathered enough information to make an informed decision as to whether the transaction of interest is a tax avoidance type of transaction, the IRS and Treasury Department may take one or more actions, including removing the transaction from the transactions of interest category in published guidance, designating the transaction as a listed transaction, or providing a new category of reportable transaction. Listed transactions do not have to be identified as transactions of interest before the transactions are identified as listed transactions. It is anticipated that, upon finalization of these proposed regulations, the transactions of interest category of reportable transaction will apply to transactions entered into on or after November 2, 2006.

C. Lease Transactions

These proposed regulations also eliminate the special rule for lease transactions. Under the current regulations this special rule provides that certain customary commercial leases of tangible personal property described in Notice 2001–18, 2001–1 C.B. 731, are excluded from all of the reportable transaction categories except listed transactions. Notice 2001–18 originally was published prior to the AJCA to provide exceptions from the confidential corporate tax shelter registration requirements under section 6111(d) and the list maintenance requirements under section 6112. The special rule for lease transactions that cross-references Notice 2001–18 was added to § 1.6011–4 in TD 9046 in February 2003. At that time, the IRS and Treasury Department were concerned that customary commercial lease transactions routinely would fall under the significant book-tax difference category of reportable transaction. The public also expressed concern that many customary leasing transactions would trigger the confidential transaction category of reportable transaction that was published in the temporary regulations under § 1.6011–4T in TD 9017 in October 2002 (and in the February 2003 regulations). Since the publication of the February 2003 regulations, the IRS and Treasury Department amended the confidential transaction category of reportable transaction in the December 2003 regulations, the AJCA removed the confidential corporate tax shelter provision in section 6111(d) in October 2004, and Notice 2006–6 signaled the removal of the significant book-tax difference transaction category of reportable transaction.

Because the confidential transaction category has been narrowed and the significant book-tax difference transaction category is being removed, the IRS and Treasury Department believe that leasing transactions should be subject to the same disclosure rules as other transactions. While the IRS and Treasury Department do believe the disclosure rules should apply to all leasing transactions, the IRS and Treasury Department also believe that most customary commercial leasing transactions will not meet the reportable transaction requirements and will not be subject to disclosure. The IRS and Treasury Department intend to obsolete Notice 2001–18 when these proposed regulations are finalized. Comments regarding the removal of this exception, the transactions that will have to be disclosed as a consequence, if any, and the possibility of exceptions for specific types of leasing transactions as to each category of reportable transaction are requested.

D. Transactions Involving a Brief Asset Holding Period

These proposed regulations also modify the transactions involving a brief asset holding period category of reportable transaction in § 1.6011–4(b)(7). Section 901(l), added to the Code by the AJCA, and section 901(k) operate to disallow foreign tax credits for withholding and certain other foreign taxes imposed on dividends or other income or gain with respect to property if the taxpayer does not meet a minimum holding period. In light of the enactment of section 901(l), the proposed regulations amend the brief asset holding period category to exclude transactions resulting in a claimed foreign tax credit.

E. Protective Disclosures

The IRS receives disclosures that taxpayers file on a protective basis, claiming that the transactions are not subject to disclosure under section 6011. Some of those taxpayers fail to provide the IRS with the information requested under section 6011 and the regulations thereunder that would enable the IRS to make a determination as to whether the transaction is subject to disclosure. Consequently, the IRS and Treasury Department have added clarifying language in the proposed regulations that allows protective disclosures to be filed in situations where a taxpayer is unsure of whether the transaction should be disclosed under section 6011 if the taxpayer complies with the rules of § 1.6011–4 as if the transaction is subject to disclosure and the person furnishes the IRS the information requested under these regulations.

F. Partners, Shareholders, and Beneficiaries

The IRS and Treasury Department are aware of situations in which partners, shareholders, and beneficiaries have filed their Federal tax returns before receiving Schedule K–1s from the partnership, S corporation or trust that participated in a reportable transaction. The proposed regulations address this problem by providing that if a taxpayer in a partnership, S corporation, or trust receives a timely Schedule K–1 less than 10 calendar days before the due date of the taxpayer's return (including extensions) and, based on receipt of the timely Schedule K–1, the taxpayer determines that the taxpayer participated in a reportable transaction, the disclosure statement will not be considered late if the taxpayer discloses the reportable transaction by filing a disclosure statement with OTSA within 45 calendar days after the due date of the taxpayer's return (including extensions). A taxpayer filing a disclosure statement in accordance with this provision need only file the statement with OTSA and need not file an amended return to make the disclosure. This provision is proposed to be applicable for transactions entered into on or after the date these regulations are published as final regulations in the **Federal Register**. However, taxpayers currently may rely on this provision in the proposed regulations, and taxpayers who have filed a disclosure statement with OTSA within 45 calendar days after the due date of the taxpayer's return (including extensions) as provided in this provision have satisfied the disclosure requirements under § 1.6011–4. The IRS and Treasury Department solicit comments on whether there may be other situations in which a taxpayer may not know or have reason to know of its participation in a reportable transaction at the time the return is filed and ways in which the disclosure rules could address these situations.

G. Tolling Provision

Other proposed changes relate to the provisions for obtaining a private letter ruling and the tolling of the time for providing disclosure during the time the request for a ruling is pending. Because the IRS and Treasury Department believe that the removal of the tolling provision will promote effective tax administration, these proposed regulations eliminate the tolling of the time for providing disclosure when a taxpayer requests a private letter ruling. Temporary regulations removing the tolling provision are being issued concurrently with these proposed regulations. Taxpayers may still request a ruling on a transaction under the regular procedures for requesting a ruling, provided the ruling request is not factual or hypothetical, but the time for providing disclosure will not be tolled. The removal of the tolling provision is effective for all ruling requests received on or after November 1, 2006.

H. Other Clarifications and Modifications

These proposed regulations also clarify and/or modify other provisions under § 1.6011–4. The regulations for estate, gift, employment, and pension and exempt organizations excise taxes are proposed to be modified by making

them applicable to transactions of interest.

I. Comments

The IRS and Treasury Department are aware of concerns expressed by commentators regarding the patenting of tax advice or tax strategies. The IRS and Treasury Department share these concerns and are exploring ways in which they could be addressed, including through the creation of a new category of reportable transaction. Comments are requested regarding the creation of such a category of reportable transaction. Comments also are requested on all proposed changes to the regulations.

J. Effective Date

Generally, when these proposed regulations become final, they will apply to transactions entered into on or after the date these regulations are published as final regulations in the **Federal Register**. However, upon publication the final regulations will apply to transactions of interest entered into on or after November 2, 2006.

Special Analyses

It has been determined that this notice of proposed rulemaking is not a significant regulatory action as defined in Executive Order 12866. Therefore, a regulatory assessment is not required. It also has been determined that section 553(b) of the Administrative Procedure Act (5 U.S.C. chapter 5) does not apply to these regulations, and because these regulations do not impose a collection of information on small entities, the provisions of the Regulatory Flexibility Act (5 U.S.C. chapter 6) do not apply. The disclosure statement referenced in these regulations will be made available for public comment in accordance with the Paperwork Reduction Act of 1995 (44 U.S.C. chapter 35). Pursuant to section 7805(f) of the Internal Revenue Code, this notice of proposed rulemaking will be submitted to the Chief Counsel for Advocacy of the Small Business Administration for comment on its impact on small business.

Comments and Requests for a Public Hearing

Before these proposed regulations are adopted as final regulations, consideration will be given to any written comments (a signed original and eight (8) copies) or electronic comments that are submitted timely to the IRS. The IRS and Treasury Department request comments on the clarity of the proposed rules, how they can be made easier to understand, and the administrability of the rules in the proposed regulations. All comments will be available for public inspection and copying. A public hearing will be scheduled if requested in writing by any person that submits timely written or electronic comments. If a public hearing is scheduled, notice of the date, time, and place for the public hearing will be published in the **Federal Register**.

Drafting Information

The principal authors of these regulations are Tara P. Volungis and Charles Wien, Office of the Associate Chief Counsel (Passthroughs and Special Industries). However, other personnel from the IRS and Treasury Department participated in their development.

List of Subjects

26 CFR Part 1

Income taxes, Reporting and recordkeeping requirements.

26 CFR Part 20

Estate taxes, Reporting and recordkeeping requirements.

26 CFR Part 25

Gift taxes, Reporting and recordkeeping requirements.

26 CFR Part 31

Employment taxes, Income taxes, Penalties, Pensions, Railroad retirement, Reporting and recordkeeping requirements, Social security, Unemployment compensation.

26 CFR Part 53

Excise taxes, Foundations, Investments, Lobbying, Reporting and recordkeeping requirements.

26 CFR Part 54

Excise taxes, Pensions, Reporting and recordkeeping requirements.

26 CFR Part 56

Excise taxes, Lobbying, Nonprofit organizations, Reporting and recordkeeping requirements.

Proposed Amendments to the Regulations

Accordingly, 26 CFR parts 1, 20, 25, 31, 53, 54, and 56 are proposed to be amended as follows:

PART 1—INCOME TAXES

Paragraph 1. The authority citation for part 1 continues to read, in part, as follows:

Authority: 26 U.S.C. 7805 * * *

Par. 2. Section 1.6011–4 is revised to read as follows:

§ 1.6011–4 Requirement of statement disclosing participation in certain transactions by taxpayers.

(a) *In general.* Every taxpayer that has participated, as described in paragraph (c)(3) of this section, in a reportable transaction within the meaning of paragraph (b) of this section and who is required to file a tax return must attach to its return for the taxable year described in paragraph (e) of this section a disclosure statement in the form prescribed by paragraph (d) of this section. The fact that a transaction is a reportable transaction shall not affect the legal determination of whether the taxpayer's treatment of the transaction is proper.

(b) *Reportable transactions*—(1) *In general.* A reportable transaction is a transaction described in any of the paragraphs (b)(2) through (7) of this section. The term transaction includes all of the factual elements relevant to the expected tax treatment of any investment, entity, plan, or arrangement, and includes any series of steps carried out as part of a plan. There are six categories of reportable transactions: listed transactions, confidential transactions, transactions with contractual protection, loss transactions, transactions of interest, and transactions involving a brief asset holding period.

(2) *Listed transactions.* A listed transaction is a transaction that is the same as or substantially similar to one of the types of transactions that the Internal Revenue Service (IRS) has determined to be a tax avoidance transaction and identified by notice, regulation, or other form of published guidance as a listed transaction.

(3) *Confidential transactions*—(i) *In general.* A confidential transaction is a transaction that is offered to a taxpayer under conditions of confidentiality and for which the taxpayer has paid an advisor a minimum fee.

(ii) *Conditions of confidentiality.* A transaction is considered to be offered to a taxpayer under conditions of confidentiality if the advisor who is paid the minimum fee places a limitation on disclosure by the taxpayer of the tax treatment or tax structure of the transaction and the limitation on disclosure protects the confidentiality of that advisor's tax strategies. A transaction is treated as confidential even if the conditions of confidentiality are not legally binding on the taxpayer. A claim that a transaction is proprietary or exclusive is not treated as a limitation on disclosure if the advisor confirms to the taxpayer that there is no limitation on disclosure of the tax treatment or tax structure of the transaction.

(iii) *Minimum fee.* For purposes of this paragraph (b)(3), the minimum fee is:

(A) $250,000 for a transaction if the taxpayer is a corporation.

(B) $50,000 for all other transactions unless the taxpayer is a partnership or trust, all of the owners or beneficiaries of which are corporations (looking through any partners or beneficiaries that are themselves partnerships or trusts), in which case the minimum fee is $250,000.

(iv) *Determination of minimum fee.* For purposes of this paragraph (b)(3), in determining the minimum fee, all fees for a tax strategy or for services for advice (whether or not tax advice) or for the implementation of a transaction are taken into account. Fees include consideration in whatever form paid, whether in cash or in kind, for services to analyze the transaction (whether or not related to the tax consequences of the transaction), for services to implement the transaction, for services to document the transaction, and for services to prepare tax returns to the extent return preparation fees are unreasonable in light of the facts and circumstances. For purposes of this paragraph (b)(3), a taxpayer also is treated as paying fees to an advisor if the taxpayer knows or should know that the amount it pays will be paid indirectly to the advisor, such as through a referral fee or fee-sharing arrangement. A fee does not include amounts paid to a person, including an advisor, in that person's capacity as a party to the transaction. For example, a fee does not include reasonable charges for the use of capital or the sale or use of property. The IRS will scrutinize carefully all of the facts and circumstances in determining whether consideration received in connection with a confidential transaction constitutes fees.

(v) *Related parties.* For purposes of this paragraph (b)(3), persons who bear a relationship to each other as described in section 267(b) or 707(b) will be treated as the same person.

(4) *Transactions with contractual protection*—(i) *In general.* A transaction with contractual protection is a transaction for which the taxpayer or a related party (as described in section 267(b) or 707(b)) has the right to a full or partial refund of fees (as described in paragraph (b)(4)(ii) of this section) if all or part of the intended tax consequences from the transaction are not sustained. A transaction with contractual protection also is a transaction for which fees (as described in paragraph (b)(4)(ii) of this section) are contingent on the taxpayer's realization of tax benefits from the transaction. All the facts and circumstances relating to the transaction will be considered when determining whether a fee is refundable or contingent, including the right to reimbursements of amounts that the parties to the transaction have not designated as fees or any agreement to provide services without reasonable compensation.

(ii) *Fees.* Paragraph (b)(4)(i) of this section only applies with respect to fees paid by or on behalf of the taxpayer or a related party to any person who makes or provides a statement, oral or written, to the taxpayer or related party (or for whose benefit a statement is made or provided to the taxpayer or related party) as to the potential tax consequences that may result from the transaction.

(iii) *Exceptions*—(A) *Termination of transaction.* A transaction is not considered to have contractual protection solely because a party to the transaction has the right to terminate the transaction upon the happening of an event affecting the taxation of one or more parties to the transaction.

(B) *Previously reported transaction.* If a person makes or provides a statement to a taxpayer as to the potential tax consequences that may result from a transaction only after the taxpayer has entered into the transaction and reported the consequences of the transaction on a filed tax return, and the person has not previously received fees from the taxpayer relating to the transaction, then any refundable or contingent fees are not taken into account in determining whether the transaction has contractual protection. This paragraph (b)(4) does not provide any substantive rules regarding when a person may charge refundable or contingent fees with respect to a transaction. See Circular 230, 31 CFR part 10, for the regulations governing practice before the IRS.

(5) *Loss transactions*—(i) *In general.* A loss transaction is any transaction resulting in the taxpayer claiming a loss under section 165 of at least—

(A) $10 million in any single taxable year or $20 million in any combination of taxable years for corporations;

(B) $10 million in any single taxable year or $20 million in any combination of taxable years for partnerships that have only corporations as partners (looking through any partners that are themselves partnerships), whether or not any losses flow through to one or more partners; or $2 million in any single taxable year or $4 million in any combination of taxable years for all other partnerships, whether or not any losses flow through to one or more partners;

(C) $2 million in any single taxable year or $4 million in any combination of taxable years for individuals, S corporations, or trusts, whether or not any losses flow through to one or more shareholders or beneficiaries; or

(D) $50,000 in any single taxable year for individuals or trusts, whether or not the loss flows through from an S corporation or partnership, if the loss arises with respect to a section 988 transaction (as defined in section 988(c)(1) relating to foreign currency transactions).

(ii) *Cumulative losses.* In determining whether a transaction results in a taxpayer claiming a loss that meets the threshold amounts over a combination of taxable years as described in paragraph (b)(5)(i) of this section, only losses claimed in the taxable year that the transaction is entered into and the five succeeding taxable years are combined.

(iii) *Section 165 loss.* (A) For purposes of this section, in determining the thresholds in paragraph (b)(5)(i) of this section, the amount of a section 165 loss is adjusted for any salvage value and for any insurance or other compensation received. See § 1.165–1(c)(4). However, a section 165 loss does not take into account offsetting gains, or other income or limitations. For example, a section 165 loss does not take into account the limitation in section 165(d) (relating to wagering losses) or the limitations in sections 165(f), 1211, and 1212 (relating to capital losses). The full amount of a section 165 loss is taken into account for the year in which the loss is sustained, regardless of whether all or part of the loss enters into the computation of a net operating loss under section 172 or a net capital loss under section 1212 that is a carryback or carryover to another year. A section 165 loss does not include any portion of a loss, attributable to a capital loss carryback or carryover from another year, that is treated as a deemed capital loss under section 1212.

(B) For purposes of this section, a section 165 loss includes an amount deductible pursuant to a provision that treats a transaction as a sale or other disposition, or otherwise results in a deduction under section 165. A section 165 loss includes, for example, a loss resulting from a sale or exchange of a partnership interest under section 741 and a loss resulting from a section 988 transaction.

(6) *Transactions of interest.* A transaction of interest is a transaction that is the same as or substantially similar to one of the types of transactions that the IRS has identified

by notice, regulation, or other form of published guidance as a transaction of interest.

(7) *Transactions involving a brief asset holding period.* A transaction involving a brief asset holding period is any transaction resulting in the taxpayer claiming a tax credit (other than a foreign tax credit) exceeding $250,000 if the underlying asset giving rise to the credit is held by the taxpayer for 45 days or less. For purposes of determining the holding period, the principles of section 246(c)(3) and (c)(4) apply.

(8) *Exceptions*—(i) *In general.* A transaction will not be considered a reportable transaction, or will be excluded from any individual category of reportable transaction under paragraphs (b)(3) through (7) of this section, if the Commissioner makes a determination by published guidance that the transaction is not subject to the reporting requirements of this section. The Commissioner may make a determination by individual letter ruling under paragraph (f) of this section that an individual letter ruling request on a specific transaction satisfies the reporting requirements of this section with regard to that transaction for the taxpayer who requests the individual letter ruling.

(ii) *Special rule for RICs.* For purposes of this section, a regulated investment company (RIC) as defined in section 851 or an investment vehicle that is owned 95 percent or more by one or more RICs at all times during the course of the transaction are not required to disclose a transaction that is described in any of paragraphs (b)(3) through (5) and (b)(7) of this section unless the transaction is also a listed transaction or a transaction of interest.

(c) *Definitions.* For purposes of this section, the following definitions apply:

(1) *Taxpayer.* The term *taxpayer* means any person described in section 7701(a)(1), including S corporations. Except as otherwise specifically provided in this section, the term *taxpayer* also includes an affiliated group of corporations that joins in the filing of a consolidated return under section 1501.

(2) *Corporation.* When used specifically in this section, the term *corporation* means an entity that is required to file a return for a taxable year on any 1120 series form, or successor form, excluding S corporations.

(3) *Participation*—(i) *In general*—(A) *Listed transactions.* A taxpayer has participated in a listed transaction if the taxpayer's tax return reflects tax consequences or a tax strategy described in the published guidance that lists the transaction under paragraph (b)(2) of this section. A taxpayer also has participated in a listed transaction if the taxpayer knows or has reason to know that the taxpayer's tax benefits are derived directly or indirectly from tax consequences or a tax strategy described in published guidance that lists a transaction under paragraph (b)(2) of this section. Published guidance may identify other types or classes of persons that will be treated as participants in a listed transaction. Published guidance also may identify types or classes of persons that will not be treated as participants in a listed transaction.

(B) *Confidential transactions.* A taxpayer has participated in a confidential transaction if the taxpayer's tax return reflects a tax benefit from the transaction and the taxpayer's disclosure of the tax treatment or tax structure of the transaction is limited in the manner described in paragraph (b)(3) of this section. If a partnership's, S corporation's or trust's disclosure is limited, and the partner's, shareholder's, or beneficiary's disclosure is not limited, then the partnership, S corporation, or trust, and not the partner, shareholder, or beneficiary, has participated in the confidential transaction.

(C) *Transactions with contractual protection.* A taxpayer has participated in a transaction with contractual protection if the taxpayer's tax return reflects a tax benefit from the transaction and, as described in paragraph (b)(4) of this section, the taxpayer has the right to the full or partial refund of fees or the fees are contingent. If a partnership, S corporation, or trust has the right to a full or partial refund of fees or has a contingent fee arrangement, and the partner, shareholder, or beneficiary does not individually have the right to the refund of fees or a contingent fee arrangement, then the partnership, S corporation, or trust, and not the partner, shareholder, or beneficiary, has participated in the transaction with contractual protection.

(D) *Loss transactions.* A taxpayer has participated in a loss transaction if the taxpayer's tax return reflects a section 165 loss and the amount of the section 165 loss equals or exceeds the threshold amount applicable to the taxpayer as described in paragraph (b)(5)(i) of this section. If a taxpayer is a partner in a partnership, shareholder in an S corporation, or beneficiary of a trust and a section 165 loss as described in paragraph (b)(5) of this section flows through the entity to the taxpayer (disregarding netting at the entity level), the taxpayer has participated in a loss transaction if the taxpayer's tax return reflects a section 165 loss and the amount of the section 165 loss that flows through to the taxpayer equals or exceeds the threshold amounts applicable to the taxpayer as described in paragraph (b)(5)(i) of this section. For this purpose, a tax return is deemed to reflect the full amount of a section 165 loss described in paragraph (b)(5) of this section allocable to the taxpayer under this paragraph (c)(3)(i)(D), regardless of whether all or part of the loss enters into the computation of a net operating loss under section 172 or net capital loss under section 1212 that the taxpayer may carry back or carry over to another year.

(E) *Transactions of interest.* A taxpayer has participated in a transaction of interest if the taxpayer is one of the types or classes of persons identified as participants in the transaction in the published guidance describing the transaction of interest.

(F) *Transactions involving a brief asset holding period.* A taxpayer has participated in a transaction involving a brief asset holding period if the taxpayer's tax return reflects items giving rise to a tax credit described in paragraph (b)(7) of this section. If a taxpayer is a partner in a partnership, shareholder in an S corporation, or beneficiary of a trust and the items giving rise to a tax credit described in paragraph (b)(7) of this section flow through the entity to the taxpayer (disregarding netting at the entity level), the taxpayer has participated in a transaction involving a brief asset holding period if the taxpayer's tax return reflects the tax credit and the amount of the tax credit claimed by the taxpayer exceeds $250,000.

(G) *Shareholders of foreign corporations*—(1) *In general.* A reporting shareholder of a foreign corporation participates in a transaction described in paragraphs (b)(2) through (5) and (b)(7) of this section if the foreign corporation would be considered to participate in the transaction under the rules of this paragraph (c)(3) if it were a domestic corporation filing a tax return that reflects the items from the transaction. A reporting shareholder of a foreign corporation participates in a transaction described in paragraph (b)(6) of this section only if the published guidance identifying the transaction includes the reporting shareholder among the types or classes of persons identified as participants. A reporting shareholder (and any successor in interest) is considered to participate in a transaction under this paragraph

(c)(3)(i)(G) only for its first taxable year with or within which ends the first taxable year of the foreign corporation in which the foreign corporation participates in the transaction, and for the reporting shareholder's five succeeding taxable years.

(2) *Reporting shareholder.* The term *reporting shareholder* means a United States shareholder (as defined in section 951(b)) in a controlled foreign corporation (as defined in section 957) or a 10 percent shareholder (by vote or value) of a qualified electing fund (as defined in section 1295).

(ii) *Examples.* The following examples illustrate the provisions of paragraph (c)(3)(i) of this section:

Example 1. Notice 2003–55 (2003–2 C.B. 395), which modified and superseded Notice 95–53 (1995–2 C.B. 334) (see § 601.601(d)(2) of this chapter), describes a lease stripping transaction in which one party (the transferor) assigns the right to receive future payments under a lease of tangible property and treats the amount realized from the assignment as its current income. The transferor later transfers the property subject to the lease in a transaction intended to qualify as a transferred basis transaction, for example, a transaction described in section 351. The transferee corporation claims the deductions associated with the high basis property subject to the lease. The transferor's and transferee corporation's tax returns reflect tax positions described in Notice 2003–55. Therefore, the transferor and transferee corporation have participated in the listed transaction. In the section 351 transaction, the transferor will have received stock with low value and high basis from the transferee corporation. If the transferor subsequently transfers the high basis/low value stock to a taxpayer in another transaction intended to qualify as a transferred basis transaction and the taxpayer uses the stock to generate a loss, and if the taxpayer knows or has reason to know that the tax loss claimed was derived indirectly from the lease stripping transaction, then the taxpayer has participated in the listed transaction. Accordingly, the taxpayer must disclose the transaction and the manner of the taxpayer's participation in the transaction under the rules of this section. For purposes of this example, if a bank lends money to the transferor, transferee corporation, or taxpayer for use in their transactions, the bank has not participated in the listed transaction because the bank's tax return does not reflect tax consequences or a tax strategy described in the listing notice (nor does the bank's tax return reflect a tax benefit derived from tax consequences or a tax strategy described in the listing notice) nor is the bank described as a participant in the listing notice.

Example 2. XYZ is a limited liability company treated as a partnership for tax purposes. X, Y, and Z are members of XYZ. X is an individual, Y is an S corporation, and Z is a partnership. XYZ enters into a confidential transaction under paragraph (b)(3) of this section. XYZ and X are bound by the confidentiality agreement, but Y and Z are not bound by the agreement. As a result of the transaction, XYZ, X, Y, and Z all reflect a tax benefit on their tax returns. Because XYZ's and X's disclosure of the tax treatment and tax structure are limited in the manner described in paragraph (b)(3) of this section and their tax returns reflect a tax benefit from the transaction, both XYZ and X have participated in the confidential transaction. Neither Y nor Z has participated in the confidential transaction because they are not subject to the confidentiality agreement.

Example 3. P, a corporation, has an 80% partnership interest in PS, and S, an individual, has a 20% partnership interest in PS. P, S, and PS are calendar year taxpayers. In 2006, PS enters into a transaction and incurs a section 165 loss (that does not meet any of the exceptions to a section 165 loss identified in published guidance) of $12 million and offsetting gain of $3 million. On PS' 2006 tax return, PS includes the section 165 loss and the corresponding gain. PS must disclose the transaction under this section because PS' section 165 loss of $12 million is equal to or greater than $2 million. P is allocated $9.6 million of the section 165 loss and $2.4 million of the offsetting gain. P does not have to disclose the transaction under this section because P's section 165 loss of $9.6 million is not equal to or greater than $10 million. S is allocated $2.4 million of the section 165 loss and $600,000 of the offsetting gain. S must disclose the transaction under this section because S's section 165 loss of $2.4 million is equal to or greater than $2 million.

(4) *Substantially similar.* The term *substantially similar* includes any transaction that is expected to obtain the same or similar types of tax consequences and that is either factually similar or based on the same or similar tax strategy. Receipt of an opinion regarding the tax consequences of the transaction is not relevant to the determination of whether the transaction is the same as or substantially similar to another transaction. Further, the term *substantially similar* must be broadly construed in favor of disclosure. For example, a transaction may be substantially similar to a listed transaction even though it involves different entities or uses different Code provisions. (See *e.g.*, Notice 2003–54, 2003–2 C.B. 363, describing a transaction substantially similar to the transactions in Notice 2002–50, 2002–2 C.B. 98, and Notice 2002–65, 2002–2 C.B. 690.) The following examples illustrate situations where a transaction is the same as or substantially similar to a listed transaction under paragraph (b)(2) of this section. (Such transactions may also be reportable transactions under paragraphs (b)(3) through (7) of this section.) The following examples illustrate the provisions of this paragraph (c)(4):

Example 1. Notice 2000–44 (2000–2 C.B. 255) (see § 601.601(d)(2) of this chapter), sets forth a listed transaction involving offsetting options transferred to a partnership where the taxpayer claims basis in the partnership for the cost of the purchased options but does not adjust basis under section 752 as a result of the partnership's assumption of the taxpayer's obligation with respect to the options. Transactions using short sales, futures, derivatives or any other type of offsetting obligations to inflate basis in a partnership interest would be the same as or substantially similar to the transaction described in Notice 2000–44. Moreover, use of the inflated basis in the partnership interest to diminish gain that would otherwise be recognized on the transfer of a partnership asset would also be the same as or substantially similar to the transaction described in Notice 2000–44.

Example 2. Notice 2001–16 (2001–1 C.B. 730) (see § 601.601(d)(2) of this chapter), sets forth a listed transaction involving a seller (X) who desires to sell stock of a corporation (T), an intermediary corporation (M), and a buyer (Y) who desires to purchase the assets (and not the stock) of T. M agrees to facilitate the sale to prevent the recognition of the gain that T would otherwise report. Notice 2001–16 describes M as a member of a consolidated group that has a loss within the group or as a party not subject to tax. Transactions utilizing different intermediaries to prevent the recognition of gain would be the same as or substantially similar to the transaction described in Notice 2001–16. An example is a transaction in which M is a corporation that does not file a consolidated return but which buys T stock, liquidates T, sells assets of T to Y, and offsets the gain recognized on the sale of those assets with currently generated losses.

(5) *Tax.* For purposes of this section, the term *tax* means Federal income tax.

(6) *Tax benefit.* A tax benefit includes deductions, exclusions from gross income, nonrecognition of gain, tax credits, adjustments (or the absence of adjustments) to the basis of property, status as an entity exempt from Federal income taxation, and any other tax consequences that may reduce a taxpayer's Federal income tax liability by affecting the amount, timing, character, or source of any item of income, gain, expense, loss, or credit.

(7) *Tax return.* For purposes of this section, the term *tax return* means a Federal income tax return and a Federal information return.

(8) *Tax treatment.* The tax treatment of a transaction is the purported or claimed Federal income tax treatment of the transaction.

(9) *Tax structure.* The tax structure of a transaction is any fact that may be relevant to understanding the purported or claimed Federal income tax treatment of the transaction.

(d) *Form and content of disclosure statement.* A taxpayer required to file a disclosure statement under this section

must file a completed Form 8886, ''Reportable Transaction Disclosure Statement'' (or a successor form), in accordance with this paragraph (d) and the instructions to the form. The Form 8886 (or a successor form) is the disclosure statement required under this section. The form must be attached to the appropriate tax return(s) as provided in paragraph (e) of this section. If a copy of a disclosure statement is required to be sent to the Office of Tax Shelter Analysis (OTSA) under paragraph (e) of this section, it must be sent in accordance with the instructions to the form. To be considered complete, the information provided on the form must describe the expected tax treatment and all potential tax benefits expected to result from the transaction, describe any tax result protection (as defined in § 301.6111–3(c)(12) of this chapter) with respect to the transaction, and identify and describe the transaction in sufficient detail for the IRS to be able to understand the tax structure of the reportable transaction and the identity of all parties involved in the transaction. An incomplete Form 8886 (or a successor form) containing a statement that information will be provided upon request is not considered a complete disclosure statement. If the form is not completed in accordance with the provisions in this paragraph (d) and the instructions to the form, the taxpayer will not be considered to have complied with the disclosure requirements of this section. If a taxpayer receives one or more reportable transaction numbers for a reportable transaction, the taxpayer must include the reportable transaction number(s) on the Form 8886 (or a successor form). See § 301.6111–3(d)(2) of this chapter.

(e) *Time of providing disclosure*—(1) *In general.* The disclosure statement for a reportable transaction must be attached to the taxpayer's tax return for each taxable year for which a taxpayer participates in a reportable transaction. In addition, a disclosure statement for a reportable transaction must be attached to each amended return that reflects a taxpayer's participation in a reportable transaction. A copy of the disclosure statement must be sent to OTSA at the same time that any disclosure statement is first filed by the taxpayer pertaining to a particular reportable transaction. If a reportable transaction results in a loss which is carried back to a prior year, the disclosure statement for the reportable transaction must be attached to the taxpayer's application for tentative refund or amended tax return for that prior year. In the case of a taxpayer that is a partnership, S corporation, or trust, the disclosure statement for a reportable transaction must be attached to the partnership, S corporation, or trust's tax return for each taxable year in which the partnership, S corporation, or trust participates in the transaction under the rules of paragraph (c)(3)(i) of this section. If a taxpayer in a partnership, S corporation, or trust receives a timely Schedule K–1 less than 10 calendar days before the due date of the taxpayer's return (including extensions) and, based on receipt of the timely Schedule K–1, the taxpayer determines that the taxpayer participated in a reportable transaction within the meaning of paragraph (c)(3) of this section, the disclosure statement will not be considered late if the taxpayer discloses the reportable transaction by filing a disclosure statement with OTSA within 45 calendar days after the due date of the taxpayer's return (including extensions).

(2) *Special rules*—(i) *Listed transactions and transactions of interest.* In general, if a transaction becomes a listed transaction or a transaction of interest after the filing of a taxpayer's tax return (including an amended return) reflecting the taxpayer's participation in the listed transaction or transaction of interest and before the end of the period of limitations for assessment of tax for any taxable year in which the taxpayer participated in the listed transaction or transaction of interest, then a disclosure statement must be filed, regardless of whether the taxpayer participated in the transaction in the year the transaction became a listed transaction or a transaction of interest, with OTSA within 60 calendar days after the date on which the transaction became a listed transaction or a transaction of interest. The Commissioner also may determine the time for disclosure of listed transactions and transactions of interest in the published guidance identifying the transaction.

(ii) *Loss transactions.* If a transaction becomes a loss transaction because the losses equal or exceed the threshold amounts as described in paragraph (b)(5)(i) of this section, a disclosure statement must be filed as an attachment to the taxpayer's tax return for the first taxable year in which the threshold amount is reached and to any subsequent tax return that reflects any amount of section 165 loss from the transaction.

(3) *Multiple disclosures.* The taxpayer must disclose the transaction in the time and manner provided for under the provisions of this section regardless of whether the taxpayer also plans to disclose the transaction under other published guidance, for example, § 1.6662–3(c)(2).

(4) *Example.* The following example illustrates the application of this paragraph (e):

Example. In January of 2006, F, a calendar year taxpayer, enters into a transaction that at the time is not a listed transaction and is not a transaction described in any of the paragraphs (b)(3) through (7) of this section. All the tax benefits from the transaction are reported on F's 2006 tax return filed timely in April 2007. On May 1, 2009, the IRS publishes a notice identifying the transaction as a listed transaction described in paragraph (b)(2) of this section. Upon issuance of the May 1, 2009 notice, the transaction becomes a reportable transaction described in paragraph (b) of this section. The period of limitations on assessment for F's 2006 taxable year is still open. F is required to file Form 8886 for the transaction with OTSA within 60 calendar days after May 1, 2009.

(f) [The text of the proposed amendment to § 1.6011–4(f)(1) is the same as the text for § 1.6011–4T(f)(1) published elsewhere in this issue of the **Federal Register**].

(2) *Protective disclosures.* If a taxpayer is uncertain whether a transaction must be disclosed under this section, the taxpayer may disclose the transaction in accordance with the requirements of this section and comply with all the provisions of this section, and indicate on the disclosure statement that the disclosure statement is being filed on a protective basis. The IRS will not treat disclosure statements filed on a protective basis any differently than other disclosure statements filed under this section. For a protective disclosure to be effective, the taxpayer must comply with these disclosure regulations by providing to the IRS all information requested by the IRS under this section.

(g) *Retention of documents.* In accordance with the instructions to Form 8886 (or a successor form), the taxpayer must retain a copy of all documents and other records related to a transaction subject to disclosure under this section that are material to an understanding of the tax treatment or tax structure of the transaction. The documents must be retained until the expiration of the statute of limitations applicable to the final taxable year for which disclosure of the transaction was required under this section. (This document retention requirement is in addition to any document retention requirements that section 6001 generally imposes on the taxpayer.) The documents may include the following: marketing materials related to the transaction; written analyses used in decision-making related to the transaction; correspondence and

agreements between the taxpayer and any advisor, lender, or other party to the reportable transaction that relate to the transaction; documents discussing, referring to, or demonstrating the purported or claimed tax benefits arising from the reportable transaction; and documents, if any, referring to the business purposes for the reportable transaction. A taxpayer is not required to retain earlier drafts of a document if the taxpayer retains a copy of the final document (or, if there is no final document, the most recent draft of the document) and the final document (or most recent draft) contains all the information in the earlier drafts of the document that is material to an understanding of the purported tax treatment or tax structure of the transaction.

(h) *Effective date*—(1) *In general.* In general, this section applies to transactions entered into on or after the date these regulations are published as final regulations in the **Federal Register**. However, upon the publication of final regulations, this section will apply to transactions of interest entered into on or after November 2, 2006.

(2) [The text of the proposed amendment to § 1.6011–4(h)(2) is the same as the text for § 1.6011–4T(h)(2) published elsewhere in this issue of the **Federal Register**].

PART 20—ESTATE TAX; ESTATES OF DECEDENTS DYING AFTER AUGUST 16, 1954

Par. 3. The authority citation for part 20 continues to read, in part, as follows:

Authority: 26 U.S.C. 7805 * * *

Par. 4. Section 20.6011–4 is amended as follows:

1. Paragraph (a) is amended by adding the language ''or a *transaction of interest*'' after the first occurrence of ''listed transaction'' and by adding the language ''or transaction of interest'' after the second occurrence of ''listed transaction''.

2. Paragraph (b) is revised.

The revision reads as follows:

§ 20.6011–4 Requirement of statement disclosing participation in certain transactions by taxpayers.

* * * * *

(b) *Effective date.* This section applies to listed transactions entered into on or after January 1, 2003. Upon the publication of final regulations, this section will apply to transactions of interest entered into on or after November 2, 2006.

PART 25—GIFT TAX; GIFTS MADE AFTER DECEMBER 31, 1954

Par. 5. The authority citation for part 25 continues to read, in part, as follows:

Authority: 26 U.S.C. 7805 * * *

Par. 6. Section 25.6011–4 is amended as follows:

1. Paragraph (a) is amended by adding the language ''or a *transaction of interest*'' after the first occurrence of ''listed transaction'' and by adding the language ''or transaction of interest'' after the second occurrence of ''listed transaction''.

2. Paragraph (b) is revised.

The revision reads as follows:

§ 25.6011–4 Requirement of statement disclosing participation in certain transactions by taxpayers.

* * * * *

(b) *Effective date.* This section applies to listed transactions entered into on or after January 1, 2003. Upon the publication of final regulations, this section will apply to transactions of interest entered into on or after November 2, 2006.

PART 31—EMPLOYMENT TAXES AND COLLECTION OF INCOME TAX AT SOURCE

Par. 7. The authority citation for part 31 continues to read, in part, as follows:

Authority: 26 U.S.C. 7805 * * *

Par. 8. Section 31.6011–4 is amended as follows:

1. Paragraph (a) is amended by adding the language ''or a *transaction of interest*'' after the first occurrence of ''listed transaction'' and by adding the language ''or transaction of interest'' after the second occurrence of ''listed transaction''.

2. Paragraph (b) is revised.

The revision reads as follows:

§ 31.6011–4 Requirement of statement disclosing participation in certain transactions by taxpayers.

* * * * *

(b) *Effective date.* This section applies to listed transactions entered into on or after January 1, 2003. Upon the publication of final regulations, this section will apply to transactions of interest entered into on or after November 2, 2006.

PART 53—FOUNDATION AND SIMILAR EXCISE TAXES

Par. 9. The authority citation for part 53 continues to read, in part, as follows:

Authority: 26 U.S.C. 7805 * * *

Par. 10. Section 53.6011–4 is amended as follows:

1. Paragraph (a) is amended by adding the language ''or a *transaction of interest*'' after the first occurrence of ''listed transaction'' and by adding the language ''or transaction of interest'' after the second occurrence of ''listed transaction''.

2. Paragraph (b) is revised.

The revision reads as follows:

§ 53.6011–4 Requirement of statement disclosing participation in certain transactions by taxpayers.

* * * * *

(b) *Effective date.* This section applies to listed transactions entered into on or after January 1, 2003. Upon the publication of final regulations, this section will apply to transactions of interest entered into on or after November 2, 2006.

PART 54—PENSION EXCISE TAXES

Par. 11. The authority citation for part 54 continues to read, in part, as follows:

Authority: 26 U.S.C. 7805 * * *

Par. 12. Section 54.6011–4 is amended as follows:

1. Paragraph (a) is amended by adding the language ''or a *transaction of interest*'' after the first occurrence of ''listed transaction'' and by adding the language ''or transaction of interest'' after the second occurrence of ''listed transaction''.

2. Paragraph (b) is revised.

The revision reads as follows:

§ 54.6011–4 Requirement of statement disclosing participation in certain transactions by taxpayers.

* * * * *

(b) *Effective date.* This section applies to listed transactions entered into on or after January 1, 2003. Upon the publication of final regulations, this section will apply to transactions of interest entered into on or after November 2, 2006.

PART 56—PUBLIC CHARITY EXCISE TAXES

Par. 13. The authority citation for part 56 continues to read, in part, as follows:

Authority: 26 U.S.C. 7805 * * *

Par. 14. Section 56.6011–4 is amended as follows:

1. Paragraph (a) is amended by adding the language ''or a *transaction of interest*'' after the first occurrence of ''listed transaction'' and by adding the language ''or transaction of interest'' after the second occurrence of ''listed transaction''.

2. Paragraph (b) is revised.

The revision reads as follows:

§ 56.6011–4 Requirement of statement disclosing participation in certain transactions by taxpayers.

* * * * *

(b) *Effective date.* This section applies to listed transactions entered into on or after January 1, 2003. Upon the publication of final regulations, this section will apply to transactions of interest entered into on or after November 2, 2006.

Mark E. Matthews,

Deputy Commissioner for Services and Enforcement.

[FR Doc. E6–18319 Filed 11–1–06; 8:45 am]

BILLING CODE 4830–01–P

DEPARTMENT OF THE TREASURY

Internal Revenue Service

26 CFR Part 301

[REG–103039–05]

RIN 1545–BE26

AJCA Modifications to the Section 6111 Regulations

AGENCY: Internal Revenue Service (IRS), Treasury.

ACTION: Notice of proposed rulemaking by cross-reference to temporary regulations.

SUMMARY: This document contains proposed regulations under section 6111 of the Internal Revenue Code which provide the rules relating to the disclosure of reportable transactions by material advisors. These regulations affect material advisors responsible for disclosing reportable transactions under section 6111 and material advisors responsible for keeping lists under section 6112.

DATES: Written or electronic comments and requests for a public hearing must be received by January 31, 2007.

ADDRESSES: Send submissions to: CC:PA:LPD:PR (REG–103039–05), room 5203, Internal Revenue Service, PO Box 7604, Ben Franklin Station, Washington, DC 20044. Submissions may be hand delivered Monday through Friday between the hours of 8 a.m. and 4 p.m. to CC:PA:LPD:PR (REG–103039–05), Courier's Desk, Internal Revenue Service, Crystal Mall 4 Building, 1901 S. Bell St., Arlington, VA, or sent electronically, via the IRS Internet site at *http://www.irs.gov/regs* or via the Federal eRulemaking Portal at *http://www.regulations.gov* (indicate IRS and REG–103039–05).

FOR FURTHER INFORMATION CONTACT: Concerning the proposed regulations, Tara P. Volungis or Charles Wien, 202–622–3070; concerning the submissions of comments and requests for hearing, Kelly Banks, 202–622–0392 (not toll-free numbers).

SUPPLEMENTARY INFORMATION:

Background

This document proposes to amend 26 CFR part 301 by providing rules relating to the disclosure of reportable transactions by material advisors under section 6111.

The American Jobs Creation Act of 2004, Public Law 108–357, 118 Stat. 1418, (AJCA) was enacted on October 22, 2004. Section 815 of the AJCA amended section 6111 to require each material advisor with respect to any reportable transaction to make a return (in such form as the Secretary may prescribe) setting forth: (1) Information identifying and describing the transaction; (2) information describing any potential tax benefits expected to result from the transaction; and (3) such other information as the Secretary may prescribe. Section 6111(a), as amended, also provides that the return must be filed not later than the date specified by the Secretary. Section 6111(b)(1), as amended, provides a definition for the term material advisor and includes as part of that definition a requirement that the material advisor derive certain threshold amounts of gross income that the Secretary may prescribe. The AJCA amendments to section 6111 also authorize the Secretary to prescribe regulations that provide: (1) That only one person shall be required to meet the requirements of section 6111(a) in cases in which two or more persons would otherwise be required to meet such requirements; (2) exemptions from the requirements of section 6111; and (3) rules as may be necessary or appropriate to carry out the purposes of section 6111. Section 815 of the AJCA is effective for transactions with respect to which material aid, assistance, or advice is provided after October 22, 2004.

Prior to these amendments, section 6111(a) required an organizer of a tax shelter to register the tax shelter with the Secretary not later than the day on which interests in the tax shelter were first offered for sale. Under former section 6111(c), the term tax shelter was defined as any investment with respect to which any person could reasonably infer from the representations made or to be made, in connection with the offering for sale of interests in the investments that the tax shelter ratio for any investor as of the close of any of the first five years ending after the date on which the investment was offered for sale may have been greater than two to one and which was: (1) Required to be registered under a Federal or State law regulating securities; (2) sold pursuant to an exemption from registration requiring the filing of a notice with a Federal or State agency regulating the offering or sale of securities; or (3) a substantial investment (the aggregate amount which may have been offered for sale exceeded $250,000 and the expected involvement of five or more investors). Under former section 6111(d), for purposes of section 6111(a), the term tax shelter included any entity, plan, arrangement or transaction; (1) A significant purpose of the structure of which is the avoidance or evasion of Federal income tax for a direct or indirect participant which is a corporation; (2) which is offered to any potential participant under conditions of confidentiality; and (3) for which the tax shelter promoters may receive fees in excess of $100,000 in the aggregate.

In response to the AJCA, the IRS and Treasury Department issued interim guidance on section 6111 in Notice 2004–80, 2004–2 C.B. 963; Notice 2005–17, 2005–1 C.B. 606; Notice 2005–22, 2005–1 C.B. 756; and Notice 2006–6, 2006–5 I.R.B. 385 (*see* § 601.601(d)(2)). The IRS and Treasury Department have received various comments and questions regarding the application of section 6111. Consequently, the IRS and Treasury Department propose new rules relating to the disclosure of reportable transactions by material advisors under section 6111.

Explanation of Provisions

A. In General

These proposed regulations are being issued concurrently with proposed regulations under § 301.6112–1 and § 1.6011–4 published elsewhere in the **Federal Register**. Under these proposed regulations, each material advisor with respect to any reportable transaction (as defined in § 1.6011–4(b)(1)) must file a return by the date prescribed in the regulations. For this purpose, a person is a material advisor with respect to a transaction if the person provides any material aid, assistance, or advice with respect to organizing, managing, promoting, selling, implementing, insuring, or carrying out any reportable transaction, and directly or indirectly derives gross income in excess of the threshold amount for the material aid, assistance, or advice. A person provides material aid, assistance, or advice with respect to organizing, managing, promoting, selling, implementing, insuring, or carrying out any transaction if the person makes or provides a tax statement to or for the benefit of certain

persons. The IRS and Treasury Department also may identify other types or classes of persons as material advisors in published guidance.

Further, these proposed regulations provide that the threshold amount of gross income that a person may derive, directly or indirectly, for providing any material aid, assistance or advice is $50,000 in the case of a reportable transaction, substantially all of the tax benefits from which are provided to natural persons ($10,000 in the case of a listed transaction). This threshold amount of gross income is increased to $250,000 in any other case ($25,000 in the case of a listed transaction). For transactions of interest, the IRS and Treasury Department also may identify reduced threshold amounts in published guidance. A person will be treated as becoming a material advisor when all of the following events have occurred (in no particular order): (A) The person provides material aid, assistance or advice; (B) the person directly or indirectly derives gross income in excess of the threshold amount; and (C) the transaction is entered into by the taxpayer.

The disclosure statement for a reportable transaction must be filed by the last day of the month that follows the end of the calendar quarter in which the advisor became a material advisor with respect to the reportable transaction. Form 8918, ''Material Advisor Disclosure Statement,'' will be published for use by material advisors to disclose reportable transactions and will supersede the Form 8264 which is currently being used for material advisor disclosures. The IRS will issue a reportable transaction number to material advisors who file the Form 8918. Material advisors must provide the reportable transaction number issued by the IRS to persons to whom the material advisor makes or provides tax statements with respect to the transaction. Public comment on the Form 8918 will be solicited in accordance with the Paperwork Reduction Act of 1995 (44 U.S.C. 3507(d)).

B. Incomplete Disclosure Statements

Persons who file incomplete disclosures under section 6111 are subject to penalties under section 6707. The proposed regulations include clarifying language to the regulation reminding taxpayers that for a disclosure to be considered complete, the information provided on Form 8918 must describe the expected tax treatment and all potential tax benefits expected to result from the transaction, describe any tax result protection with respect to the transaction, and identify and describe the transaction in sufficient detail for the IRS to be able to understand the tax structure of the reportable transaction and the identity of the material advisor(s). An incomplete form containing a statement that information will be provided upon request is not considered a complete disclosure statement.

C. Tax Result Protection

Previous comments to the regulations under § 1.6011–4 stated that it is inappropriate to require reporting of transactions under the contractual protection filter of § 1.6011–4(b)(4) for which the taxpayer obtains tax result protection (sometimes referred to as ''tax result insurance'') because numerous legitimate business transactions with tax indemnities would be subject to reporting. The IRS and Treasury Department removed tax result protection from that category of reportable transaction but cautioned that if the IRS and Treasury Department became aware of abusive transactions utilizing tax result protection, the issue would be reconsidered.

The IRS and Treasury Department have since become aware of taxpayers who have obtained tax result protection for the tax benefits of a listed transaction from a third party provider. In the AJCA, Congress expressed concern about tax result protection for reportable transactions and included insuring in the list of activities added to the statutory language under section 6111. The IRS, Treasury Department, and Congress have an interest in learning more about the insuring of reportable transactions. Accordingly, while a transaction will not be a reportable transaction simply because there is tax result protection for the transaction, tax result protection provided for a reportable transaction may subject a person to the material advisor disclosure rules under section 6111 because a tax statement includes third party tax result protection that insures the tax benefits of a reportable transaction.

D. Designation Agreements

The proposed regulations include a provision allowing designation agreements for disclosure of reportable transactions similar to the provision in the current regulations under § 301.6112–1 that allows material advisors to have a designation agreement authorizing one material advisor to maintain a list of investors in the transaction. However, parties to the designation agreement may still be liable for the penalty under section 6707 if the designated material advisor fails to disclose the reportable transaction under section 6111.

E. Post-Filing Advice

The current regulations under § 301.6112–1 provide that a person will not be considered to be a material advisor with respect to a transaction if that person does not make or provide a tax statement regarding the transaction until after the first tax return reflecting tax benefit(s) of the transaction is filed with the IRS. The IRS and Treasury Department, however, believe that a person should be considered a material advisor for certain post-filing advice. Consequently, the proposed rule provides that the exception will not apply to a person who makes a tax statement with respect to the transaction if it is expected that the taxpayer will file a supplemental or amended return reflecting additional tax benefits from the transaction.

F. Protective Disclosures

The IRS receives disclosures filed on a protective basis from persons claiming that the transactions are not subject to disclosure under section 6111. Some of those disclosures fail to provide the IRS with the information requested under sections 6111 and 6112 and the regulations thereunder that would enable the IRS to make a determination as to whether the transaction is subject to disclosure. Consequently, the IRS and Treasury Department have added clarifying language in the proposed regulation that allows protective disclosures to be filed in situations where a person is unsure of whether the transaction should be disclosed under section 6111. However, the disclosure is effective only if the rules of § 301.6111–3 and § 301.6112–1 are followed.

G. Tolling Provision

In response to comments that asked whether the tolling provisions of § 1.6011–4(f) would apply to requests from a potential material advisor for a letter ruling under section 6111, Notice 2005–22 provided that, until further guidance is issued, if an advisor submits a request for a letter ruling on or before the date the return under section 6111 is due and fully discloses all relevant facts relating to the transaction, the obligation of the potential material advisor to disclose the transaction will be suspended as provided in § 1.6011–4(f). The IRS and Treasury Department believe that removing the tolling provision will promote effective tax administration. Consequently, these proposed regulations do not include a provision to toll the time for providing

disclosure when a potential material advisor requests a ruling on a transaction. Potential material advisors may request a ruling under section 6111 on a transaction under the regular procedures for requesting a ruling, provided the ruling request is not factual or hypothetical, but the time for providing disclosure under section 6111 will not be tolled. The temporary regulations issued concurrently with these proposed regulations supersede the tolling provision in Notice 2005–22, effective for all ruling requests received on or after November 1, 2006.

H. Effective Date

Generally, when these proposed regulations become final, they will apply to transactions with respect to which a material advisor makes a tax statement on or after the date the regulations are published as final regulations in the **Federal Register**. However, upon publication the final regulations will apply to transactions of interest entered into on or after November 2, 2006 with respect to which a material advisor makes a tax statement under § 301.6111–3 on or after November 2, 2006.

Special Analyses

It has been determined that this notice of proposed rulemaking is not a significant regulatory action as defined in Executive Order 12866. Therefore, a regulatory assessment is not required. It also has been determined that section 553(b) of the Administrative Procedure Act (5 U.S.C. chapter 5) does not apply to these regulations, and because these regulations do not impose a collection of information on small entities, the provisions of the Regulatory Flexibility Act (5 U.S.C. chapter 6) do not apply. The return referenced in these regulations will be made available for public comment in accordance with the Paperwork Reduction Act of 1995 (44 U.S.C. chapter 35). Pursuant to section 7805(f) of the Internal Revenue Code, this notice of proposed rulemaking will be submitted to the Chief Counsel for Advocacy of the Small Business Administration for comment on its impact on small business.

Comments and Requests for a Public Hearing

Before these proposed regulations are adopted as final regulations, consideration will be given to any written comments (a signed original and eight (8) copies) or electronic comments that are submitted timely to the IRS. The IRS and Treasury Department request comments on the clarity of the proposed rules, how they can be made easier to understand, and the administrability of the rules in the proposed regulations. All comments will be available for public inspection and copying. A public hearing will be scheduled if requested in writing by any person that submits timely written or electronic comments. If a public hearing is scheduled, notice of the date, time, and place for the public hearing will be published in the **Federal Register**.

Drafting Information

The principal authors of these regulations are Tara P. Volungis and Charles Wien, Office of the Associate Chief Counsel (Passthroughs and Special Industries). However, other personnel from the IRS and Treasury Department participated in their development.

List of Subjects in 26 CFR Part 301

Employment taxes, Estate taxes, Excise taxes, Gift taxes, Income taxes, Penalties, Reporting and recordkeeping requirements.

Proposed Amendments to the Regulations

Accordingly, 26 CFR part 301 is proposed to be amended as follows:

PART 301—PROCEDURE AND ADMINISTRATION

Paragraph 1. The authority citation for part 301 continues to read, in part, as follows:

Authority: 26 U.S.C. 7805 * * *

Par. 2. Section 301.6111–3 is added to read as follows:

§ 301.6111–3 Disclosure of reportable transactions.

(a) *In general.* Each material advisor, as defined in paragraph (b) of this section, with respect to any reportable transaction, as defined in § 1.6011–4(b) of this chapter, must file a return as described in paragraph (d) of this section by the date described in paragraph (e) of this section.

(b) *Material advisor*—(1) *In general.* A person is a material advisor with respect to a transaction if the person provides any material aid, assistance, or advice with respect to organizing, managing, promoting, selling, implementing, insuring, or carrying out any reportable transaction, and directly or indirectly derives gross income in excess of the threshold amount as defined in paragraph (b)(3) of this section for the material aid, assistance, or advice. The term transaction includes all of the factual elements relevant to the expected tax treatment of any investment, entity, plan or arrangement, and includes any series of steps carried out as part of a plan.

(2) *Material aid, assistance, or advice*—(i) *In general.* Except as provided in paragraph (b)(5) of this section, a person provides material aid, assistance, or advice with respect to organizing, managing, promoting, selling, implementing, insuring, or carrying out any transaction if the person makes or provides a tax statement to or for the benefit of—

(A) A taxpayer who either is required to disclose the transaction under §§ 1.6011–4, 20.6011–4, 25.6011–4, 31.6011–4, 53.6011–4, 54.6011–4, or 56.6011–4 of this chapter because the transaction is a listed transaction or a transaction of interest, or would have been required to disclose the transaction under §§ 1.6011–4, 20.6011–4, 25.6011–4, 31.6011–4, 53.6011–4, 54.6011–4, or 56.6011–4 of this chapter if the transaction had become a listed transaction or a transaction of interest within the period of limitations in § 1.6011–4(e) of this chapter;

(B) A taxpayer who the potential material advisor knows is or reasonably expects to be required to disclose the transaction under § 1.6011–4 of this chapter because the transaction is or is reasonably expected to become a transaction described in § 1.6011–4(b)(3) through (5) or (7) of this chapter;

(C) A material advisor who is required to disclose the transaction under this section because it is a listed transaction or a transaction of interest; or

(D) A material advisor who the potential material advisor knows is or reasonably expects to be required to disclose the transaction under this section because the transaction is or is reasonably expected to become a transaction described in § 1.6011–4(b)(3) through (5) or (7) of this chapter.

(ii) *Tax statement*—(A) *In general.* A tax statement is any statement (including another person's statement), oral or written, that relates to a tax aspect of a transaction that causes the transaction to be a reportable transaction as defined in § 1.6011–4(b)(2) through (7) of this chapter. A tax statement under this section includes tax result protection that insures some or all of the tax benefits of a reportable transaction.

(B) *Confidential transactions.* A statement relates to a tax aspect of a transaction that causes it to be a confidential transaction if the statement concerns a tax benefit related to the transaction and either the taxpayer's disclosure of the tax treatment or tax structure of the transaction is limited in the manner described in § 1.6011–4(b)(3) of this chapter by or for the

benefit of the person making the statement, or the person making the statement knows the taxpayer's disclosure of the tax structure or tax aspects of the transaction is limited in the manner described in § 1.6011–4(b)(3) of this chapter.

(C) *Transactions with contractual protection.* A statement relates to a tax aspect of a transaction that causes it to be a transaction with contractual protection if the statement concerns a tax benefit related to the transaction and either—

(*1*) The taxpayer has the right to a full or partial refund of fees paid to the person making the statement or the fees are contingent in the manner described in § 1.6011–4(b)(4) of this chapter; or

(*2*) The person making the statement knows or has reason to know that the taxpayer has the right to a full or partial refund of fees (described in § 1.6011–4(b)(4)(ii) of this chapter) paid to another if all or part of the intended tax consequences from the transaction are not sustained or that fees (as described in § 1.6011–4(b)(4)(ii) of this chapter) paid by the taxpayer to another are contingent on the taxpayer's realization of tax benefits from the transaction in the manner described in § 1.6011–4(b)(4) of this chapter.

(D) *Loss transactions.* A statement relates to a tax aspect of a transaction that causes it to be a loss transaction if the statement concerns an item that gives rise to a loss described in § 1.6011–4(b)(5) of this chapter.

(E) *Transactions involving a brief asset holding period.* A statement relates to a tax aspect of a transaction involving a brief asset holding period if the statement concerns an item that gives rise to a tax credit described in § 1.6011–4(b)(7) of this chapter.

(iii) *Special rules*—(A) *Capacity as an employee.* A material advisor generally does not include a person who makes a tax statement solely in the person's capacity as an employee, shareholder, partner or agent of another person. Any tax statement made by that person will be attributed to that person's employer, corporation, partnership or principal. However, a person shall be treated as a material advisor if that person forms or avails of an entity with the purpose of avoiding the rules of section 6111 or 6112 or the penalties under section 6707 or 6708.

(B) *Post-filing advice.* A person will not be considered to be a material advisor with respect to a transaction if that person does not make or provide a tax statement regarding the transaction until after the first tax return reflecting tax benefit(s) of the transaction is filed with the IRS. However, this exception does not apply to a person who makes a tax statement with respect to the transaction if it is expected that the taxpayer will file a supplemental or amended return reflecting additional tax benefits from the transaction.

(C) *Publicly filed statements.* A tax statement with respect to a transaction that includes only information about the transaction contained in publicly available documents filed with the Securities and Exchange Commission no later than the close of the transaction will not be considered a tax statement to or for the benefit of a person described in paragraph (b)(2) of this section.

(3) *Gross income derived for material aid, assistance, or advice*—(i) *Threshold amount*—(A) *In general.* The threshold amount of gross income is $50,000 in the case of a reportable transaction substantially all of the tax benefits from which are provided to natural persons (looking through any partnerships, S corporations, or trusts). For all other transactions, the threshold amount is $250,000.

(B) *Listed transactions and transactions of interest.* For listed transactions described in §§ 1.6011–4, 20.6011–4, 25.6011–4, 31.6011–4, 53.6011–4, 54.6011–4, or 56.6011–4 of this chapter, the threshold amounts in paragraph (b)(3)(i)(A) of this section are reduced from $50,000 to $10,000 and from $250,000 to $25,000. For transactions of interest described in §§ 1.6011–4, 20.6011–4, 25.6011–4, 31.6011–4, 53.6011–4, 54.6011–4, or 56.6011–4 of this chapter, the threshold amounts in paragraph (b)(3)(i)(A) of this section may be reduced as identified in the published guidance describing the transaction.

(ii) *Gross income derived directly or indirectly for the material aid, assistance, or advice.* In determining the amount of gross income a person derives directly or indirectly for material aid, assistance, or advice, all fees for a tax strategy or for services for advice (whether or not tax advice) or for the implementation of a reportable transaction are taken into account. Fees include consideration in whatever form paid, whether in cash or in kind, for services to analyze the transaction (whether or not related to the tax consequences of the transaction), for services to implement the transaction, for services to document the transaction, and for services to prepare tax returns to the extent return preparation fees are unreasonable in light of all of the facts and circumstances. A fee does not include amounts paid to a person, including an advisor, in that person's capacity as a party to the transaction. For example, a fee does not include reasonable charges for the use of capital or the sale or use of property. The IRS will scrutinize carefully all of the facts and circumstances in determining whether consideration received in connection with a reportable transaction constitutes gross income derived directly or indirectly for aid, assistance, or advice. For purposes of this section, the threshold amount must be met independently for each transaction that is a reportable transaction and aggregation of fees among transactions is not required.

(4) *Date a person becomes a material advisor*—(i) *In general.* A person will be treated as becoming a material advisor when all of the following events have occurred (in no particular order)—

(A) The person provides material aid, assistance or advice as described in paragraph (b)(2) of this section;

(B) The person directly or indirectly derives gross income in excess of the threshold amount as described in paragraph (b)(3) of this section; and

(C) The transaction is entered into by the taxpayer to whom or for whose benefit the person provided the tax statement, or in the case of a tax statement provided to another material advisor, when the transaction is entered into by a taxpayer to whom or for whose benefit that material advisor provided a tax statement.

(ii) *Determining if the taxpayer entered into the transaction.* Material advisors, including those who cease providing services before the time the transaction is entered into, must make reasonable and good faith efforts to determine whether the event described in paragraph (b)(4)(i)(C) of this section has occurred.

(iii) *Listed transactions and transactions of interest.* If a transaction that was not a reportable transaction is identified as a listed transaction or a transaction of interest in published guidance after the occurrence of the events described in paragraph (b)(4)(i) of this section, the person will be treated as becoming a material advisor on the date the transaction is identified as a listed transaction or a transaction of interest.

(5) *Other persons designated as material advisors.* Published guidance may identify other types or classes of persons as material advisors.

(c) *Definitions.* For purposes of this section, the following definitions apply:

(1) *Reportable transaction.* The term *reportable transaction* is defined in § 1.6011–4(b)(1) of this chapter.

(2) *Listed transaction.* The term *listed transaction* is defined in § 1.6011–4(b)(2) of this chapter. *See also*

§§ 20.6011–4(a), 25.6011–4(a), 31.6011–4(a), 53.6011–4(a), 54.6011–4(a), or 56.6011–4(a) of this chapter.

(3) *Derive.* The term *derive* means receive or expect to receive.

(4) *Person.* The term *person* means any person described in section 7701(a)(1), including an affiliated group of corporations that join in the filing of a consolidated return under section 1501.

(5) *Substantially similar.* The term *substantially similar* is defined in § 1.6011–4(c)(4) of this chapter.

(6) *Tax.* The term *tax* means Federal tax.

(7) *Tax benefit.* A tax benefit includes deductions, exclusions from gross income, nonrecognition of gain, tax credits, adjustments (or the absence of adjustments) to the basis of property, status as an entity exempt from Federal income taxation, and any other tax consequences that may reduce a taxpayer's Federal tax liability by affecting the amount, timing, character, or source of any item of income, gain, expense, loss, or credit.

(8) *Tax return.* The term *tax return* means a Federal tax return and a Federal information return.

(9) *Tax structure.* The tax structure of a transaction is any fact that may be relevant to understanding the purported or claimed Federal tax treatment of the transaction.

(10) *Tax treatment.* The tax treatment of a transaction is the purported or claimed Federal tax treatment of the transaction.

(11) *Taxpayer.* The term *taxpayer* is defined in § 1.6011–4(c)(1) of this chapter.

(12) *Tax result protection.* The term *tax result protection* includes insurance company and other third party products commonly described as tax result insurance.

(13) *Transaction of interest.* The term *transaction of interest* is defined in § 1.6011–4(b)(6) of this chapter. *See also* §§ 20.6011–4(a), 25.6011–4(a), 31.6011–4(a), 53.6011–4(a), 54.6011–4(a), or 56.6011–4(a) of this chapter.

(d) *Form and content of material advisor's disclosure statement*—(1) *In general.* A material advisor required to file a disclosure statement under this section must file a completed Form 8918, ''Material Advisor Disclosure Statement'' (or successor form) in accordance with this paragraph (d) and the instructions to the form. To be considered complete, the information provided on the form must describe the expected tax treatment and all potential tax benefits expected to result from the transaction, describe any tax result protection with respect to the transaction, and identify and describe the transaction in sufficient detail for the IRS to be able to understand the tax structure of the reportable transaction and the identity of the material advisor(s). An incomplete form containing a statement that information will be provided upon request is not considered a complete disclosure statement. A material advisor may file a single form for substantially similar transactions. An amended form must be filed if information previously provided is no longer accurate, if additional information that was not disclosed becomes available, or if there are material changes to the transaction. A material advisor is not required to file an additional form for each additional taxpayer that enters into the same or substantially similar transaction. If the form is not completed in accordance with the provisions in this paragraph (d) and the instructions to the form, the material advisor will not be considered to have complied with the disclosure requirements of this section.

(2) *Reportable transaction number.* The IRS will issue to a material advisor a reportable transaction number with respect to the disclosed reportable transaction. Receipt of a reportable transaction number does not indicate that the disclosure statement is complete, nor does it indicate that the transaction has been reviewed, examined, or approved by the IRS. Material advisors must provide the reportable transaction number to all taxpayers and material advisors to whom the material advisor makes or provides tax statements. The reportable transaction number must be provided at the time the transaction is entered into, or, if the transaction is entered into prior to the material advisor receiving the reportable transaction number, within 60 calendar days from the date the reportable transaction number is mailed to the material advisor.

(e) *Time of providing disclosure.* The material advisor's disclosure statement for a reportable transaction must be filed with the Office of Tax Shelter Analysis (OTSA) by the last day of the month that follows the end of the calendar quarter in which the advisor became a material advisor with respect to the reportable transaction or in which the circumstances necessitating an amended disclosure statement occur. The disclosure statement must be sent to OTSA at the address provided in the instructions for Form 8918 (or a successor form).

(f) *Designation agreements.* If more than one material advisor is required to disclose a reportable transaction under this section, the material advisors may designate by written agreement a single material advisor to disclose the transaction. The transaction must be disclosed by the last day of the month following the end of the calendar quarter that includes the earliest date on which a material advisor who is a party to the agreement became a material advisor with respect to the transaction as described in paragraph (b)(4) of this section. The designation of one material advisor to disclose the transaction does not relieve the other material advisors of their obligation to disclose the transaction to the IRS in accordance with this section, if the designated material advisor fails to disclose the transaction to the IRS in a timely manner.

(g) *Protective disclosures.* If a potential material advisor is uncertain whether a transaction must be disclosed under this section, the advisor may disclose the transaction in accordance with the requirements of this section and comply with all the provisions of this section, and indicate on the disclosure statement that the disclosure statement is being filed on a protective basis. The IRS will not treat disclosure statements filed on a protective basis any differently than other disclosure statements filed under this section. For a protective disclosure to be effective, the advisor must comply with the regulations under this section and § 301.6112–1 by providing to the IRS all information requested by the IRS under these sections.

(h) [The text of the proposed § 301.6111–3(h) is the same as the text for § 301.6111–3T(h) published elsewhere in this issue of the **Federal Register**].

(i) Effective date—(1) *In general.* In general, this section applies to transactions with respect to which a material advisor makes a tax statement on or after the date these regulations are published as final regulations in the **Federal Register**. However, upon the publication of final regulations, this section will apply to transactions of interest entered into on or after November 2, 2006 with respect to which a material advisor makes a tax statement under § 301.6111–3 on or after November 2, 2006.

(2) [The text of the proposed § 301.6111–3(i)(2) is the same as the text for § 301.6111–3T(i)(2) published elsewhere in this issue of the **Federal Register**].

Mark E. Matthews,

Deputy Commissioner for Services and Enforcement.

[FR Doc. E6–18321 Filed 11–1–06; 8:45 am]

BILLING CODE 4830–01–P

DEPARTMENT OF THE TREASURY

Internal Revenue Service

26 CFR Part 301

[REG–103043–05]

RIN 1545–BE28

AJCA Modifications to the Section 6112 Regulations

AGENCY: Internal Revenue Service (IRS), Treasury.

ACTION: Notice of proposed rulemaking.

SUMMARY: This document contains proposed regulations under section 6112 of the Internal Revenue Code which provide the rules relating to the obligation of material advisors to prepare and maintain lists with respect to reportable transactions. These regulations affect material advisors responsible for keeping lists under section 6112.

DATES: Written or electronic comments and requests for a public hearing must be received by January 31, 2007.

ADDRESSES: Send submissions to: CC:PA:LPD:PR (REG–103043–05), room 5203, Internal Revenue Service, PO Box 7604, Ben Franklin Station, Washington, DC 20044. Submissions may be hand delivered Monday through Friday between the hours of 8 a.m. and 4 p.m. to CC:PA:LPD:PR (REG–103043–05), Courier's Desk, Internal Revenue Service, Crystal Mall 4 Building, 1901 S. Bell St., Arlington, VA, or sent electronically, via the IRS Internet site at *http://www.irs.gov/regs* or via the Federal eRulemaking Portal at *http://www.regulations.gov* (indicate IRS and REG–103043–05).

FOR FURTHER INFORMATION CONTACT: Concerning the proposed regulations, Tara P. Volungis or Charles Wien, 202–622–3070; concerning the submissions of comments and requests for hearing, Kelly Banks, 202–622–0392 (not toll-free numbers).

SUPPLEMENTARY INFORMATION:

Paperwork Reduction Act

The collection of information contained in this notice of proposed rulemaking has been submitted to the Office of Management and Budget for review in accordance with the Paperwork Reduction Act of 1995 (44 U.S.C. 3507(d)). Comments on the collection of information should be sent to the Office of Management and Budget, Attn: Desk Officer for the Department of the Treasury, Office of Information and Regulatory Affairs, Washington, DC 20503, with copies to the Internal Revenue Service, Attn: IRS Reports Clearance Officer, SE:W:CAR:MP:T:T:SP, Washington, DC 20224. Comments on the collection of information should be received by January 2, 2007.

Comments are specifically requested concerning:

Whether the proposed collection of information is necessary for the proper performance of the functions of the Internal Revenue Service, including whether the information will have practical utility;

The accuracy of the estimated burden associated with the proposed collection of information (see below);

How the quality, utility, and clarity of the information to be collected may be enhanced;

How the burden of complying with the proposed collections of information may be minimized, including through the application of automated collection techniques or other forms of information technology; and

Estimates of capital or start-up costs and costs of operation, maintenance, and purchase of service to provide information.

The collection of information in this proposed regulation is in § 301.6112–1(b) and (d). This information is required in order for a material advisor to comply with the list maintenance rules under section 6112. This information will be used to improve compliance with the tax laws by giving the IRS earlier notification of transactions that may not comport with the tax laws. The collection of information is mandatory. The likely respondents are business or other for-profit institutions or individuals.

Estimated total annual reporting burden: 50,000 hours.

Estimated average annual burden hours per respondent: 100 hours.

Estimated number of respondents: 500.

Estimated annual frequency of responses: On occasion.

An agency may not conduct or sponsor, and a person is not required to respond to, a collection of information unless it displays a valid control number assigned by the Office of Management and Budget.

Books or records relating to a collection of information must be retained as long as their contents may become material in the administration of any internal revenue law. Generally, tax returns and tax return information are confidential, as required by 26 U.S.C. 6103.

Background

This document proposes to amend 26 CFR part 301 by amending the rules relating to the list maintenance requirements of material advisors with respect to reportable transactions under section 6112.

The American Jobs Creation Act of 2004, Public Law 108–357, 118 Stat. 1418, (AJCA) was enacted on October 22, 2004. Section 815 of the AJCA amended section 6112 to provide that each material advisor (as defined in section 6111, as amended by the AJCA) with respect to any reportable transaction is required to maintain a list (in such manner as the Secretary may by regulations prescribe) identifying each person with respect to whom the advisor acted as a material advisor with respect to the transaction, and containing other information as the Secretary may by regulations require. Section 815 of the AJCA is effective for transactions with respect to which material aid, assistance, or advice is provided after October 22, 2004. Prior to the amendments to section 6111 made by the AJCA, the definition of material advisor was in § 301.6112–1 of the Procedure and Administration Regulations.

In response to the AJCA, the IRS and Treasury Department issued interim guidance affecting section 6112 in Notice 2004–80, 2004–2 C.B. 963; Notice 2005–17, 2005–1 C.B. 606; Notice 2005–22, 2005–1 C.B. 756; and Notice 2006–6, 2006–5 I.R.B. 385 (*see* § 601.601(d)(2)). The IRS and Treasury Department have received various comments and questions regarding the application of section 6112 under the AJCA. Consequently, the IRS and Treasury Department propose amendments to the rules relating to the list maintenance obligation of material advisors under section 6112.

Explanation of Provisions

A. In General

These proposed regulations are being issued concurrently with proposed regulations under § 1.6011–4 and § 301.6111–3 published elsewhere in the **Federal Register**. The definition of material advisor is provided in the proposed regulations under § 301.6111–3(b). The definition of reportable transaction is provided in the proposed regulations under § 1.6011–4(b)(1). Under these proposed regulations, each material advisor for any reportable transaction must maintain a list identifying each person with respect to whom the advisor acted as a material advisor and containing other information described in the regulations.

B. The List

The information that must be contained in the list under these proposed regulations is similar to the information required to be included on the list under the current § 301.6112–1 regulations, with some additions or clarifications, such as, the name of each other material advisor to the transaction, if known by the material advisor, and any designation agreement to which the material advisor is a party. The IRS and Treasury Department believe that this information is required to be provided under the current regulations. However, due to questions raised by material advisors under the current regulations, these proposed amendments clarify that the name of other material advisors and designation agreements are required to be maintained.

To date, the IRS has received lists under the current regulations that are not in a form that enables the IRS to determine without undue delay or difficulty the information required under the regulation. Some material advisors have merely produced boxes of documents rather than a list as required under § 301.6112–1. Under section 6708 as amended by the AJCA, any person who is required to maintain a list under section 6112(a) who fails to make the list available to the Secretary upon written request within 20 business days after the date of the request, must pay a penalty of $10,000 for each day of such failure. Failure to maintain the list in accordance with these regulations also subjects a person to the penalty under section 6708. The proposed regulations specifically clarify that the list to be maintained by the material advisor and furnished to the IRS upon request consists of three separate components: (1) An itemized statement of information, (2) a detailed description of the transaction, and (3) copies of documents relating to the transaction. The itemized statement of information must contain all of the requested information in a form that is easy to understand (for example, in a format such as a list, spreadsheet, or table). In order for the material advisor to be in compliance with its obligations under section 6112, the material advisor must maintain and furnish in the time prescribed the itemized statement of information, the description of the transaction, and the copies of documents. Under the proposed regulations, the Secretary, in published guidance, may provide a form or method for maintaining and/or furnishing a list.

C. Other Clarifications and Modifications

The proposed regulations remove the provision detailing how a privilege is claimed with regard to certain information on the list. The regulations continue to require that if a claim of privilege is made, the material advisor must continue to maintain the list in accordance with these regulations.

Similar to provisions in the current § 301.6112–1 regulations, material advisors under the proposed regulations may have a designation agreement authorizing one material advisor to maintain and furnish the list. However, the designation agreement does not relieve the other material advisors of their obligation to furnish the list if the designated material advisor fails to furnish the list in a timely manner. Thus, parties to a designation agreement may still be liable for the penalty under section 6708.

Contrary to the provisions in the current regulations under § 301.6112–1, these proposed regulations contain no provision to toll the requirement for maintaining the list when a potential material advisor requests a private letter ruling on a specific transaction. The IRS and Treasury Department believe that removing the tolling provision will promote effective tax administration. Consequently, potential material advisors may request a ruling on a transaction, as provided in the temporary regulations under § 301.6111–3T(h), under the regular procedures for requesting a ruling, provided the ruling request is not factual or hypothetical, but the requirement for disclosing the transaction under section 6111 and maintaining the list under section 6112 will not be tolled. Final regulations removing the tolling provision are being issued concurrently with these proposed regulations. The removal of the tolling provision is effective for all ruling requests received on or after November 1, 2006.

D. Effective Date

Generally, when these proposed regulations become final, they will apply to transactions with respect to which a material advisor makes a tax statement on or after the date the regulations are published as final regulations in the **Federal Register**. However, upon publication the final regulations will apply to transactions of interest entered into on or after November 2, 2006 with respect to which a material advisor makes a tax statement under § 301.6111–3 on or after November 2, 2006.

Special Analyses

It has been determined that this notice of proposed rulemaking is not a significant regulatory action as defined in Executive Order 12866. Therefore, a regulatory assessment is not required. It also has been determined that section 553(b) of the Administrative Procedure Act (5 U.S.C. chapter 5) does not apply to these regulations. It is hereby certified that the collection of information in these regulations will not have a significant economic impact on a substantial number of small entities. This certification is based upon the fact that most of the information is already required to be reported under the current regulations; the clarifications and new information required by the proposed regulations add little or no new burden to the existing requirements. Therefore, a Regulatory Flexibility Analysis under the Regulatory Flexibility Act (5 U.S.C. chapter 6) is not required. Pursuant to section 7805(f) of the Internal Revenue Code, this notice of proposed rulemaking will be submitted to the Chief Counsel for Advocacy of the Small Business Administration for comment on its impact on small business.

Comments and Requests for a Public Hearing

Before these proposed regulations are adopted as final regulations, consideration will be given to any written comments (a signed original and eight (8) copies) or electronic comments that are submitted timely to the IRS. The IRS and Treasury Department request comments on the clarity of the proposed rules, how they can be made easier to understand, and the administrability of the rules in the proposed regulations. All comments will be available for public inspection and copying. A public hearing will be scheduled if requested in writing by any person that submits timely written or electronic comments. If a public hearing is scheduled, notice of the date, time, and place for the public hearing will be published in the **Federal Register**.

Drafting Information

The principal authors of these regulations are Tara P. Volungis and Charles Wien, Office of the Associate Chief Counsel (Passthroughs and Special Industries). However, other personnel from the IRS and Treasury Department participated in their development.

List of Subjects in 26 CFR Part 301

Employment taxes, Estate taxes, Excise taxes, Gift taxes, Income taxes,

Penalties, Reporting and recordkeeping requirements.

Proposed Amendments to the Regulations

Accordingly, 26 CFR part 301 is proposed to be amended as follows:

PART 301—PROCEDURE AND ADMINISTRATION

Paragraph 1. The authority citation for part 301 continues to read, in part, as follows:

Authority: 26 U.S.C. 7805 * * *

Par. 2. Section 301.6112–1 is revised to read as follows:

§ 301.6112–1 Material advisors of reportable transactions must keep lists of advisees, etc.

(a) *In general.* Each material advisor, as defined in § 301.6111–3(b), with respect to any reportable transaction, as defined in § 1.6011–4(b) of this chapter, shall prepare and maintain a list in accordance with paragraph (b) of this section and shall furnish such list to the Internal Revenue Service (IRS) in accordance with paragraph (e) of this section.

(b) *Preparation and maintenance of lists*—(1) *In general.* A separate list must be prepared and maintained for each reportable transaction. However, one list must be maintained for substantially similar transactions. A list must be maintained in a form that enables the IRS to determine without undue delay or difficulty the information required in paragraph (b)(3) of this section. The Secretary may, by publication in the Internal Revenue Bulletin (*see* § 601.601(d)(2)(ii)(b) of this chapter), provide a form or method for maintaining and/or furnishing a list.

(2) *Persons required to be included on lists.* A material advisor is required to maintain a list identifying each person with respect to whom the advisor acted as a material advisor with respect to the reportable transaction. However, a material advisor is not required to identify a person on the list if the person entered into a listed transaction or a transaction of interest more than 6 years before the transaction was identified in published guidance as a listed transaction or a transaction of interest.

(3) *Contents.* Each list must include the three components described in paragraph (b)(3)(i), (ii), and (iii) of this section.

(i) *Statement.* An itemized statement containing the following information—

(A) The name of each reportable transaction, the citation to the published guidance number identifying the transaction if the transaction is a listed transaction or a transaction of interest, and the reportable transaction number obtained under section 6111;

(B) The name, address, and TIN of each person required to be included on the list;

(C) The date on which each person required to be included on the list entered into each reportable transaction, if known by the material advisor;

(D) The amount invested in each reportable transaction by each person required to be included on the list, if known by the material advisor;

(E) A summary or schedule of the tax treatment that each person is intended or expected to derive from participation in each reportable transaction; and

(F) The name of each other material advisor to the transaction, if known by the material advisor.

(ii) *Description of the transaction.* A detailed description of each reportable transaction that describes both the tax structure of the transaction and the purported tax treatment of the transaction.

(iii) *Documents.* The following documents—

(A) A copy of any designation agreement (as described in paragraph (f) of this section) to which the material advisor is a party; and

(B) Copies of any additional written materials, including tax analyses or opinions, relating to each reportable transaction that are material to an understanding of the purported tax treatment or tax structure of the transaction that have been shown or provided to any person who acquired or may acquire an interest in the transactions, or to their representatives, tax advisors, or agents, by the material advisor or any related party or agent of the material advisor. However, a material advisor is not required to retain earlier drafts of a document provided the material advisor retains a copy of the final document (or, if there is no final document, the most recent draft of the document) and the final document (or most recent draft) contains all the information in the earlier drafts of such document that is material to an understanding of the purported tax treatment or the tax structure of the transaction.

(c) *Definitions.* For purposes of this section, the following terms are defined as:

(1) *Material advisor.* The term *material advisor* is defined in § 301.6111–3(b).

(2) *Reportable transaction.* The term *reportable transaction* is defined in § 1.6011–4(b)(1) of this chapter.

(3) *Listed transaction.* The term *listed transaction* is defined in § 1.6011–4(b)(2) of this chapter. *See also* §§ 20.6011–4(a), 25.6011–4(a), 31.6011–4(a), 53.6011–4(a), 54.6011–4(a), or 56.6011–4(a) of this chapter.

(4) *Substantially similar.* The term *substantially similar* is defined in § 1.6011–4(c)(4) of this chapter.

(5) *Person.* The term *person* is defined in § 301.6111–3(c)(4).

(6) *Related party.* A person is a *related party* with respect to another person if such person bears a relationship to such other person described in section 267(b) or 707(b).

(7) *Tax.* The term *tax* is defined in § 301.6111–3(c)(6).

(8) *Tax benefit.* The term *tax benefit* is defined in § 301.6111–3(c)(7).

(9) *Tax return.* The term *tax return* is defined in § 301.6111–3(c)(8).

(10) *Tax structure.* The term *tax structure* is defined in § 301.6111–3(c)(9).

(11) *Tax treatment.* The term *tax treatment* is defined in § 301.6111–3(c)(10).

(12) *Transaction of interest.* The term *transaction of interest* is defined in § 1.6011–4(b)(6) of this chapter. *See also* §§ 20.6011–4(a), 25.6011–4(a), 31.6011–4(a), 53.6011–4(a), 54.6011–4(a), or 56.6011–4(a) of this chapter.

(d) *Retention of lists.* Each material advisor must maintain each component of the list described in paragraph (b)(3) of this section in a readily accessible form for seven years following the earlier of the date on which the material advisor last made a tax statement relating to the transaction, or the date the transaction was last entered into, if known. If the material advisor required to prepare, maintain, and furnish the list is a corporation, partnership, or other entity (entity) that has dissolved or liquidated before completion of the seven-year period, the person responsible under State law for winding up the affairs of the entity must prepare, maintain and furnish each component of the list on behalf of the entity, unless the entity submits the list to the Office of Tax Shelter Analysis (OTSA) within 60 days after the dissolution or liquidation. If State law does not specify any person as responsible for winding up the affairs, then each of the directors of the corporation, the general partners of the partnership, or the trustees, owners, or members of the entity are responsible for preparing, maintaining and furnishing each component of the list on behalf of the entity, unless the entity submits the list to the OTSA within 60 days after the dissolution or liquidation. The responsible person must also provide notice to OTSA of

such dissolution or liquidation within 60 days after the dissolution or liquidation. The list and the notice provided to OTSA must be sent to: Internal Revenue Service, OTSA Mail Stop 4915, 1973 North Rulon White Blvd., Ogden, Utah 84404, or to such other address as provided by the Commissioner.

(e) *Furnishing of lists*—(1) *In general.* Each material advisor responsible for maintaining a list must, upon written request by the IRS, make each component of the list described in paragraph (b)(3) of this section available to the IRS by furnishing each component of the list to the IRS within 20 business days from the day on which the request is provided. The 20 business-day period shall begin on the first business day following the earlier of the date that the IRS mails a request for the list by certified or registered mail to the last known address of the material advisor required to maintain the list, or hand-delivers the written request in person. Business days include every calendar day other than Saturdays, Sundays, or legal holidays. For purposes of this paragraph (e), *legal holiday* shall have the same meaning provided in section 7503. The request is not required to be in the form of an administrative summons. Each component of the list must be furnished to the IRS in a form that enables the IRS to determine without undue delay or difficulty the information required in paragraph (b)(3) of this section. If any component of the list is not in a form that enables the IRS to determine without undue delay or difficulty the information required in paragraph (b)(3) of this section, the material advisor will not be considered to have complied with the list maintenance provisions in section 6112 and this section.

(2) *Claims of privilege.* Each material advisor who is required to maintain a list with respect to a reportable transaction, must still maintain the list pursuant to the requirements of this section even if a person asserts a claim of privilege with respect to the information specified in paragraph (b)(3)(iii)(B) of this section.

(f) *Designation agreements.* If more than one material advisor is required to maintain a list of persons for a reportable transaction, in accordance with paragraph (b) of this section, the material advisors may designate by written agreement a single material advisor to maintain the list or a portion of the list. The designation of one material advisor to maintain the list does not relieve the other material advisors from their obligation to furnish the list to the IRS in accordance with paragraph (e)(1) of this section, if the designated material advisor fails to furnish the list to the IRS in a timely manner. A material advisor is not relieved from the requirement of this section because a material advisor is unable to obtain the list from any designated material advisor, any designated material advisor did not maintain a list, or the list maintained by any designated material advisor is not complete.

(g) *Effective date.* In general, this section applies to transactions with respect to which a material advisor makes a tax statement under § 301.6111–3 on or after the date these regulations are published as final regulations in the **Federal Register**. However, upon the publication of final regulations, this section will apply to transactions of interest entered into on or after November 2, 2006 with respect to which a material advisor makes a tax statement under § 301.6111–3 on or after November 2, 2006.

Mark E. Matthews,

Deputy Commissioner for Services and Enforcement.

[FR Doc. E6–18323 Filed 11–1–06; 8:45 am]

BILLING CODE 4830–01–P

DEPARTMENT OF JUSTICE

Bureau of Prisons

28 CFR Part 524

[BOP–1141–P]

RIN 1120–AB39

Intensive Confinement Center Program

AGENCY: Federal Bureau of Prisons, Justice.

ACTION: Proposed rule.

SUMMARY: The Bureau of Prisons (Bureau) proposes to remove current rules on the intensive confinement center program (ICC). The ICC is a specialized program for non-violent offenders combining features of a military boot camp with traditional Bureau correctional values. The Bureau will no longer be offering the ICC program (also known as Shock Incarceration or Boot Camp) to inmates as a program option. This decision was made as part of an overall strategy to eliminate programs that do not reduce recidivism.

DATES: Comments due by January 2, 2007.

ADDRESSES: Our e-mail address is *BOPRULES@BOP.GOV.* Comments should be submitted to the Rules Unit, Office of General Counsel, Bureau of Prisons, 320 First Street, NW., Washington, DC 20534. You may view an electronic version of this rule at *http://www.regulations.gov.* You may also comment via the Internet to BOP at *BOPRULES@BOP.GOV* or by using the *www.regulations.gov* comment form for this regulation. When submitting comments electronically you must include the BOP Docket No. in the subject box.

FOR FURTHER INFORMATION CONTACT: Sarah Qureshi, Office of General Counsel, Bureau of Prisons, phone (202) 307–2105.

SUPPLEMENTARY INFORMATION: We initially published these regulations describing ICC eligibility requirements and successful program completion requirements as an interim rule in the **Federal Register** on April 26, 1996 (61 FR 18658). We received no comments on the interim rule. We later amended these regulations through another interim rule on October 15, 1997 (62 FR 53691). Again, we received no comments on that interim rule. Through this rulemaking, the Bureau seeks to be clear to inmates and the public regarding the termination of the ICC program.

The current ICC regulations state that ''[p]lacement in the intensive confinement center program is to be made by Bureau staff in accordance with sound correctional judgment and the availability of Bureau resources.'' 28 CFR 524.32(b). The Bureau could, without rulemaking, discontinue the ICC program because it is no longer supported by ''sound correctional judgment,'' and/or because it diverts Bureau resources from more successful programs.

Also, 18 U.S.C. 4046 does not *require* the establishment of a ''shock incarceration'' program. Rather, it authorizes the Bureau to grant sentence reductions to those inmates who successfully complete such a program, *i.e.* ''The Bureau of Prisons *may* place in a shock incarceration program * * *'' (emphasis added).

However, because the Bureau seeks to minimize public confusion and accurately reflect its practice by eliminating unnecessary regulations, the Bureau now formally proposes the removal of the ICC regulations.

The ICC program operated at Bureau institutions located in Bryan, Texas; Lewisburg, Pennsylvania; and Lompoc, California. Under this rule, no new ICC classes or associated extended community confinement and early release benefits will be offered. However, other pre-release

programming opportunities will continue to exist.

Despite anecdotal successes, research has found no significant difference in recidivism rates between inmates who complete boot camp programs and similar offenders who serve their sentences in traditional institutions. There is a national trend among correctional agencies to phase out boot camp programs, as a result of many years of experience. (*See* National Institute of Justice Research for Practice Report, ''Correctional Boot Camps: Lessons From a Decade of Research,'' June 2003).

The Bureau has determined that completion of boot camp programs does not tend to result in lower rates of recidivism as compared to offenders with similar background characteristics who did not participate in the program. (*See* National Institute of Justice Report, ''Multisite Evaluation of Shock Incarceration,'' September 1994).

Moreover, the costs associated with maintaining the federal boot camp programs exceed the costs of operating ordinary minimum security camps, as a result of (1) the staff resources necessary to maintain the intensive core programming that make up the ''shock incarceration'' or ''intensive confinement'' experience, and (2) the high costs of housing offenders for extended periods of time in Community Corrections Centers, where the per capita costs are higher than those of housing offenders in minimum security camps.

While there are some cost savings due to the early release of offenders who successfully complete the program, these savings are minimal compared to the additional costs of operating the program, which create a net increased cost to the agency of more than $1 million per year.

The lack of significant beneficial results has led the Bureau to the conclusion that it can no longer justify the expenditure of public funds to operate the ICC program.

It is important to note that the phase out of the ICC does not represent a change in the Bureau's mission; the Bureau remains fully committed to operating safe and secure institutions and to providing opportunities for inmates to gain the skills and the training necessary for a successful, crime-free, return to the community.

The Bureau has renewed its emphasis on allocating its resources to support programs that are proven effective. The ICC program has some attractive features, but it does not reduce recidivism. The Bureau operates several programs that are proven to significantly reduce recidivism. Research conducted over the past 20 years has demonstrated convincingly that inmates who participate in the Bureau's major inmate programs are substantially less likely to recidivate as compared to similar inmates who do not participate. These programs include Residential Substance Abuse Treatment, Vocational Training and Apprenticeship, Education and Federal Prison Industries (operated without appropriated funds). There are also other inmate programs, such as skills building and values development, that have been found, preliminarily, to affect inmate misconduct which is a valid predictor of recidivism. These programs are being carefully reviewed to determine their impact on recidivism.

Therefore, for the aforementioned reasons, we propose to remove our rules in Subpart D of 28 CFR part 524.

Executive Order 12866

This regulation has been drafted and reviewed in accordance with Executive Order 12866, ''Regulatory Planning and Review'', section 1(b), Principles of Regulation. The Director, Bureau of Prisons has determined that this rule is a ''significant regulatory action'' under Executive Order 12866, section 3(f), and accordingly this rule has been reviewed by the Office of Management and Budget.

Executive Order 13132

This regulation will not have substantial direct effects on the States, on the relationship between the national government and the States, or on distribution of power and responsibilities among the various levels of government. Under Executive Order 13132, this rule does not have sufficient federalism implications for which we would prepare a Federalism Assessment.

Regulatory Flexibility Act

The Director of the Bureau of Prisons, under the Regulatory Flexibility Act (5 U.S.C. 605(b)), reviewed this regulation. By approving it, the Director certifies that it will not have a significant economic impact upon a substantial number of small entities because: This rule is about the correctional management of offenders committed to the custody of the Attorney General or the Director of the Bureau of Prisons, and its economic impact is limited to the Bureau's appropriated funds.

Unfunded Mandates Reform Act of 1995

This rule will not cause State, local and tribal governments, or the private sector, to spend $100,000,000 or more in any one year, and it will not significantly or uniquely affect small governments. We do not need to take action under the Unfunded Mandates Reform Act of 1995.

Small Business Regulatory Enforcement Fairness Act of 1996

This rule is not a major rule as defined by § 804 of the Small Business Regulatory Enforcement Fairness Act of 1996. This rule will not result in an annual effect on the economy of $100,000,000 or more; a major increase in costs or prices; or significant adverse effects on competition, employment, investment, productivity, innovation, or on the ability of United States-based companies to compete with foreign-based companies in domestic and export markets.

List of Subjects in 28 CFR Part 524

Prisoners.

Harley G. Lappin,

Director, Bureau of Prisons.

Under rulemaking authority vested in the Attorney General in 5 U.S.C. 552(a) and delegated to the Director, Bureau of Prisons, we propose to amend 28 CFR part 524 as set forth below.

SUBCHAPTER B—INMATE ADMISSION, CLASSIFICATION, AND TRANSFER

PART 524—CLASSIFICATION OF INMATES

1. The authority for part 524 continues to read as follows:

Authority: 5 U.S.C. 301; 18 U.S.C. 3521–3528, 3621, 3622, 3624, 4001, 4042, 4046, 4081, 4082 (Repealed in part as to offenses committed on or after November 1, 1987), 5006–5024 (Repealed October 12, 1984 as to offenses committed after that date), 5039; 21 U.S.C. 848; 28 U.S.C. 509, 510.

2. Subpart D—Intensive Confinement Center Program is removed and reserved.

[FR Doc. E6–18437 Filed 11–1–06; 8:45 am]

BILLING CODE 4410–05–P

DEPARTMENT OF JUSTICE

Bureau of Prisons

28 CFR Part 545

[BOP Docket No. BOP 1132–P]

RIN 1120–AB33

Inmate Work and Performance Pay Program: Reduction in Pay for Drug- and Alcohol-Related Disciplinary Offenses

AGENCY: Bureau of Prisons, Justice.

ACTION: Proposed rule.

SUMMARY: In this document, the Bureau of Prisons (Bureau) proposes to amend regulations on inmate work and performance pay to require that inmates receiving performance pay who are found through the disciplinary process (found in 28 CFR part 541) to have committed a level 100 or 200 series drug-or alcohol-related prohibited act will automatically have their performance pay reduced to maintenance pay level and will be removed from any assigned work detail outside the secure perimeter of the institution.

DATES: Comments are due by January 2, 2007.

ADDRESSES: Our e-mail address is *BOPRULES@BOP.GOV.* Comments should be submitted to the Rules Unit, Office of General Counsel, Bureau of Prisons, 320 First Street, NW., Washington, DC 20534. You may view an electronic version of this rule at *www.regulations.gov.* You may also comment on this regulation via the Internet at *BOPRULES@BOP.GOV* or by using the *www.regulations.gov* comment form for this regulation. When submitting comments electronically you must include the BOP Docket No. in the subject box.

FOR FURTHER INFORMATION CONTACT: Sarah Qureshi, Office of General Counsel, Bureau of Prisons, phone (202) 307–2105.

SUPPLEMENTARY INFORMATION: In this document, the Bureau amends regulations on inmate work and performance pay to require that inmates receiving performance pay who are found through the disciplinary process (found in 28 CFR part 541) to have committed a level 100 or 200 series drug-or alcohol-related prohibited act will automatically have their performance pay reduced to maintenance pay level and will be removed from any assigned work detail outside the secure perimeter of the institution.

The presence of even minute quantities of drug or alcohol contraband poses serious problems to the security, discipline, and good order of a correctional institution. By requiring a reduction in performance pay as a result of a level 100 or 200 series drug-or alcohol-related prohibited act, this rule provides a disincentive that is commensurate with the seriousness of those types of prohibited acts.

We currently have similar rules removing inmates from certain programs as a collateral consequence of disciplinary action. For instance, 28 CFR 345.52(g), pertaining to inmates earning Federal Prison Industries premium pay, provides for *automatic* removal from premium pay status if an inmate is found by a DHO to have committed any level 100 or 200 series offense. Likewise, with regard to the Bureau's drug abuse treatment program, 28 CFR 550.56(d) states that the drug abuse treatment coordinator may remove from the program an inmate found to have committed any level 100 or 200 offense.

Also, under 28 CFR 544.73 (b)(1)(ii), if an inmate commits a prohibited act during enrollment in the Bureau's Literacy Program, that inmate is considered not to be making ''satisfactory progress'' towards obtaining a General Educational Development (GED) credential, which could result in loss of good conduct time credit under 28 CFR 523.20.

Like the aforementioned rules, this rule provides an additional disincentive for inmates in an effort to target and eliminate the use and/or introduction of drugs or alcohol into Bureau institutions.

Executive Order 12866

This rule falls within a category of actions that the Office of Management and Budget (OMB) has determined to constitute ''significant regulatory actions'' under section 3(f) of Executive Order 12866 and, accordingly, it was reviewed by OMB.

The Bureau has assessed the costs and benefits of this rule as required by Executive Order 12866 Section 1(b)(6) and has made a reasoned determination that the benefits of this rule justify its costs. This rule will have the benefit of strengthening ongoing efforts to target and eliminate the use and/or introduction of drugs or alcohol into Bureau institutions. There will be no new costs associated with this rulemaking.

Executive Order 13132

This regulation will not have substantial direct effects on the States, on the relationship between the national government and the States, or on distribution of power and responsibilities among the various levels of government. Therefore, under Executive Order 13132, we determine that this rule does not have sufficient Federalism implications to warrant the preparation of a Federalism Assessment.

Regulatory Flexibility Act

The Director of the Bureau of Prisons, under the Regulatory Flexibility Act (5 U.S.C. 605(b)), reviewed this regulation and by approving it certifies that it will not have a significant economic impact upon a substantial number of small entities for the following reasons: This rule pertains to the correctional management of offenders committed to the custody of the Attorney General or the Director of the Bureau of Prisons, and its economic impact is limited to the Bureau's appropriated funds.

Unfunded Mandates Reform Act of 1995

This rule will not result in the expenditure by State, local and tribal governments, in the aggregate, or by the private sector, of $100,000,000 or more in any one year, and it will not significantly or uniquely affect small governments. Therefore, no actions were deemed necessary under the provisions of the Unfunded Mandates Reform Act of 1995.

Small Business Regulatory Enforcement Fairness Act of 1996

This rule is not a major rule as defined by § 804 of the Small Business Regulatory Enforcement Fairness Act of 1996. This rule will not result in an annual effect on the economy of $100,000,000 or more; a major increase in costs or prices; or significant adverse effects on competition, employment, investment, productivity, innovation, or on the ability of United States-based companies to compete with foreign-based companies in domestic and export markets.

List of Subjects in 28 CFR Part 545

Prisoners.

Harley G. Lappin,

Director, Bureau of Prisons.

Under rulemaking authority vested in the Attorney General in 5 U.S.C. 301; 28 U.S.C. 509, 510 and delegated to the Director, Bureau of Prisons in 28 CFR 0.96, we propose to amend 28 CFR part 545 as set forth below.

Subchapter C—Institutional Management

PART 545—WORK AND COMPENSATION

1. Revise the authority citation for 28 CFR part 545 to read as follows:

Authority: 5 U.S.C. 301; 18 U.S.C. 3013, 3571, 3572, 3621, 3622, 3624, 3663, 4001, 4042, 4081, 4082 (Repealed in part as to offenses committed on or after November 1, 1987), 4126, 5006–5024 (Repealed October 12, 1984 as to offenses committed after that date), 5039; 28 U.S.C. 509, 510.

2. In § 545.25, add paragraph (e) to read as follows:

§ 545.25 Eligibility for performance pay.

* * * * *

(e) Inmates receiving performance pay who are found through the disciplinary

process (part 541 of this subchapter) to have committed a level 100 or 200 series drug-or alcohol-related prohibited act will automatically have their performance pay reduced to maintenance pay level and will be removed from any assigned work detail outside the secure perimeter of the institution.

[FR Doc. E6–18447 Filed 11–1–06; 8:45 am]

BILLING CODE 4410–05–P

DEPARTMENT OF JUSTICE

Bureau of Prisons

28 CFR Part 550

[Docket No. BOP–1139–P]

RIN 1120–AB41

Drug Abuse Treatment Program: Eligibility of D.C. Code Offenders for Early Release Consideration

AGENCY: Bureau of Prisons, Justice.

ACTION: Proposed rule.

SUMMARY: In this document, the Bureau of Prisons (Bureau) proposes to extend early release consideration to D.C. Code offenders pursuant to D.C. Code § 24–403.01.

DATES: Comments due by January 2, 2007.

FOR FURTHER INFORMATION CONTACT: Sarah Qureshi, Office of General Counsel, Bureau of Prisons, phone (202) 307–2105, e-mail *BOPRULES@BOP.GOV*.

SUPPLEMENTARY INFORMATION: On July 1, 2004 (69 FR 39887), we published a proposed rule revising all the regulations on the Drug Abuse Treatment Program in 28 CFR part 550, subpart F (2004 proposed rule). We now propose to revise 28 CFR 550.55(a) of the 2004 proposed rule to extend early release consideration to D.C. Code offenders pursuant to D.C. Code § 24–403.01.

The 2004 proposed rule, § 550.55(a), stated that inmates may be eligible for early release by a period not to exceed 12 months if they were sentenced to a term of imprisonment under 18 U.S.C. Chapter 227, Subchapter D for a nonviolent offense and successfully complete a residential drug abuse treatment program, as described in § 550.53, during their current commitment.

We now propose to modify § 550.55(a) from the 2004 proposed rule to state that inmates may be eligible for early release by a period not to exceed 12 months if they were sentenced to a term of imprisonment under *either* 18 U.S.C. Chapter 227, Subchapter D for a nonviolent offense; or D.C. Code § 24–403.01 for a nonviolent offense, meaning an offense other than those in D.C. Code § 23–1331(4). There has been no change to the provision in the 2004 rule stating that in addition to the above criteria, inmates must successfully complete a residential drug abuse treatment program, as described in § 550.53, during their current commitment.

Statutory Authority

The Residential Drug Abuse Program (RDAP) is available to all eligible inmates pursuant to Title 18 U.S.C. 3621(b) and (e). Section 3621(b) generally obligates the Bureau to provide ''substance abuse treatment for each prisoner the Bureau determines has a treatable condition of addiction or abuse.'' Section 3621(e)(1) states that the Bureau ''shall, subject to the availability of appropriations, provide residential substance abuse treatment * * * for all eligible prisoners.''

Further, under § 3621(e)(2)(B), the period a prisoner convicted of a nonviolent offense remains in custody after successfully completing a treatment program may be reduced by the Bureau of Prisons, but such reduction may not be more than one year from the term the prisoner must otherwise serve.

Early Release Regulation

In 1995, the Bureau published a regulation to implement the early release incentive which defined the term ''crime of violence'' and provided a framework for Bureau employees to make early release determinations. *See* 60 FR 27692 (May 25, 1995) (previously codified at 28 CFR 550.58). Instructive policy was issued in Program Statement 5162.02, Definition of Term, ''Crimes of Violence.'' In the regulation and policy, the Bureau defined the term ''crime of violence'' pursuant to 18 U.S.C. 924(c)(3). Subsequently, there was a split among Circuit Courts regarding the validity of this approach. The split prompted the Bureau to revise the regulation in 1997 to explicitly rely upon the discretion allotted to the Director of the Bureau to grant a sentence reduction. *See* 62 FR 53690 (Oct. 15, 1997) (codified at 28 CFR 550.58(a), currently in 550.55). The revised regulation was designed to achieve consistent administration of the early release incentive and to clearly demonstrate that the Bureau now relied upon the discretion of the Director to determine eligibility for certain program benefits.

The revised regulation and policy resulted in another split among the Circuit Courts which was resolved by the Supreme Court's decision in *Lopez* v. *Davis*, 531 U.S. 230 (2001). In *Lopez,* the Supreme Court held that the revised regulation found at 28 CFR 550.58 (currently in § 550.55) is a permissible exercise of the Bureau's discretion under § 3621(e)(2)(B) for assessing program benefit eligibility.

D.C. Code Offenders—Eligibility for Early Release

The Bureau initially codified its rules regarding its Drug Abuse Treatment Programs on January 7, 1994. Subsequently, on May 25, 1995, the Bureau amended its rules on Drug Abuse Treatment Programs to allow for the consideration of early release of eligible inmates who successfully completed the RDAP. Excluded from this category of eligible inmates were inmates in Bureau custody not serving a sentence for a federal offense (e.g., D.C. Code offenders, contractual borders, INS detainees, and pretrial inmates).

However, D.C. Code § 24–403.01(d–1), amended on May 24, 2005, states that D.C. Code offenders sentenced under D.C. Code § 24–403.01 for a nonviolent offense are eligible for early release consideration in accordance with 18 U.S.C. 3621(e)(2). Accordingly, the Director now extends early release eligibility pursuant to 18 U.S.C. 3621(e)(2) to D.C. Code offenders for successful completion of the RDAP.

Eligibility for early release for D.C. Code offenders participating in the Residential Drug Abuse Program (RDAP) requires a determination that the inmate has not committed a crime of violence as defined by D.C. Code § 23–1331(4).

The National Capital Revitalization and Self-Government Improvement Act of 1997, approved August 5, 1997, (Pub. L. 105–33; 111 Stat. 740) (''Revitalization Act'') dictates that D.C. Code felony offenders ''shall be subject to any law or regulation applicable to persons committed for violations of laws of the United States consistent with the sentence imposed, and the Bureau of Prisons shall be responsible for the custody, care, subsistence, education, treatment and training of such persons.'' D.C. Code § 24–101(b). Therefore, as with federal offenders, it is also within the Director's discretion, as provided by 18 U.S.C. 3621(e), to determine D.C. Code offenders' eligibility for early release according to the same criteria used for federal offenders. This criteria, which appears in current § 550.58, gives the following

list of inmates not eligible for early release:

(1) Immigration and Customs Enforcement detainees;

(2) Pretrial inmates;

(3) Contractual boarders (for example, State, or military inmates);

(4) Inmates who have a prior felony or misdemeanor conviction for:

(i) homicide (including deaths caused by recklessness, but not including deaths caused by negligence or justifiable homicide),

(ii) forcible rape,

(iii) robbery,

(iv) aggravated assault,

(v) arson,

(vi) kidnaping; or

(vii) an offense that by its nature or conduct involves sexual abuse offenses committed upon minors;

(5) Inmates who have a current felony conviction for:

(i) an offense that has as an element, the actual, attempted, or threatened use of physical force against the person or property of another,

(ii) an offense that involved the carrying, possession, or use of a firearm or other dangerous weapon or explosives (including any explosive material or explosive device),

(iii) an offense that by its nature or conduct, presents a serious potential risk of physical force against the person or property of another; or

(iv) an offense that by its nature or conduct involves sexual abuse offenses committed upon minors;

(6) Inmates who have been convicted of an attempt, conspiracy, or other offense which involved an underlying offense to commit any offense listed in paragraph (4) and/or (5); or

(7) Inmates who previously received an early release under 18 U.S.C. 3621(e).

Title 18 U.S.C. 3621(e)(2)(B) establishes two prerequisites for early release consideration:

(1) Conviction of a nonviolent offense and

(2) successful completion of drug treatment. If those prerequisites are met, the Bureau may grant early release.

Thus, because of the Revitalization Act, the explicit intention of the D.C. Government stated in D.C. Code § 24–403.01, the statutory language of § 3621, the Bureau's regulations, and the Bureau's clearly established use of discretion as held in *Lopez*, the Bureau can consider D.C. Code offenders for RDAP early release as it does for Federal offenders.

Executive Order 12866

This regulation has been drafted and reviewed in accordance with Executive Order 12866, ''Regulatory Planning and Review'', section 1(b), Principles of Regulation. The Director, Bureau of Prisons has determined that this rule is not a ''significant regulatory action'' under Executive Order 12866, section 3(f), and accordingly this rule has not been reviewed by the Office of Management and Budget.

In particular, the Bureau has assessed the costs and benefits of this rule as required by Executive Order 12866 Section 1(b)(6) and has made a reasoned determination that the benefits of this rule justify its costs. Clarifying and streamlining this rule and eliminating unnecessary text and obsolete language will have the benefit of easier readability and improved understanding of our drug treatment programs. We strengthen the program by calculated revisions designed to allow inmates to succeed in drug treatment while avoiding expending resources unnecessarily.

Executive Order 13132

This regulation will not have substantial direct effects on the States, on the relationship between the national government and the States, or on distribution of power and responsibilities among the various levels of government. Under Executive Order 13132, this rule does not have sufficient federalism implications for which we would prepare a Federalism Assessment.

Regulatory Flexibility Act

The Director of the Bureau of Prisons, under the Regulatory Flexibility Act (5 U.S.C. 605(b)), reviewed this regulation. By approving it, the Director certifies that it will not have a significant economic impact upon a substantial number of small entities because: This rule is about the correctional management of offenders committed to the custody of the Attorney General or the Director of the Bureau of Prisons, and its economic impact is limited to the Bureau's appropriated funds.

Unfunded Mandates Reform Act of 1995

This rule will not cause State, local and tribal governments, or the private sector, to spend $100,000,000 or more in any one year, and it will not significantly or uniquely affect small governments. We do not need to take action under the Unfunded Mandates Reform Act of 1995.

Small Business Regulatory Enforcement Fairness Act of 1996

This rule is not a major rule as defined by § 804 of the Small Business Regulatory Enforcement Fairness Act of 1996. This rule will not result in an annual effect on the economy of $100,000,000 or more; a major increase in costs or prices; or significant adverse effects on competition, employment, investment, productivity, innovation, or on the ability of United States-based companies to compete with foreign-based companies in domestic and export markets.

List of Subjects in 28 CFR Part 550

Prisoners.

Harley G. Lappin,

Director, Bureau of Prisons.

Under the rulemaking authority vested in the Attorney General in 5 U.S.C 301; 28 U.S.C. 509, 510 and delegated to the Director, Bureau of Prisons in 28 CFR 0.96, we propose to amend 28 CFR part 550 as follows.

SUBCHAPTER C—INSTITUTIONAL MANAGEMENT

PART 550—DRUG PROGRAMS

1. The authority citation for part 550 continues to read as follows:

Authority: 5 U.S.C. 301; 18 U.S.C. 3521–3528, 3621, 3622, 3624, 4001, 4042, 4046, 4081, 4082 (Repealed in part as to offenses committed on or after November 1, 1987), 5006–5024 (Repealed October 12, 1984 as to offenses committed after that date), 5039; 21 U.S.C. 848; 28 U.S.C. 509, 510; Title V, Pub. L. 91–452, 84 Stat. 933 (18 U.S.C. Chapter 223).

Subpart F—Drug Abuse Treatment Program

2. Revise § 550.55 (a)(1) as follows:

§ 550.55 Eligibility for early release.

(a) *Eligibility.* Inmates may be eligible for early release by a period not to exceed 12 months if they:

(1) were sentenced to a term of imprisonment under either:

(i) 18 U.S.C. Chapter 227, Subchapter D for a nonviolent offense; or

(ii) D.C. Code § 24–403.01 for a nonviolent offense, meaning an offense other than those in D.C. Code § 23–1331(4); and

* * * * *

[FR Doc. E6–18439 Filed 11–1–06; 8:45 am]

BILLING CODE 4410–05–P

Notices

Federal Register
Vol. 71, No. 212
Thursday, November 2, 2006

This section of the FEDERAL REGISTER contains documents other than rules or proposed rules that are applicable to the public. Notices of hearings and investigations, committee meetings, agency decisions and rulings, delegations of authority, filing of petitions and applications and agency statements of organization and functions are examples of documents appearing in this section.

DEPARTMENT OF AGRICULTURE

Agricultural Marketing Service

[Docket Number FV–06–301]

United States Standards for Grades of Mixed Commodities

AGENCY: Agricultural Marketing Service, USDA.

ACTION: Notice.

SUMMARY: The Agricultural Marketing Service (AMS) of the Department of Agriculture (USDA) is establishing voluntary United States Standards for Grades of Mixed Commodities. The standards will provide industry with a common language and uniform basis for trading, thus promoting the orderly and efficient marketing for fresh fruits and vegetables that are mixed in a package.

DATES: *Effective Date:* December 4, 2006.

FOR FURTHER INFORMATION CONTACT: Cheri L. Emery, Standardization Section, Fresh Products Branch, Fruit and Vegetable Programs, Agricultural Marketing Service, U.S. Department of Agriculture, 1400 Independence Ave., SW., Room 1661, South Building, Stop 0240, Washington, DC 20250–0240, (202) 720–2185, fax (202) 720–8871, or e-mail *Cheri.Emery@usda.gov.*

The United States Standards for Grades of Mixed Commodities is available either from the above address or by accessing the AMS, Fresh Products Branch Web site at: *http://www.ams.usda.gov/standards/stanfrfv.htm.*

SUPPLEMENTARY INFORMATION: Section 203(c) of the Agricultural Marketing Act of 1946 (7 U.S.C. 1621–1627), as amended, directs and authorizes the Secretary of Agriculture ''To develop and improve standards of quality, condition, quantity, grade and packaging and recommend and demonstrate such standards in order to encourage uniformity and consistency in commercial practices.'' AMS is committed to carrying out this authority in a manner that facilitates the marketing of agricultural commodities and makes copies of official standards available upon request. The United States Standards for Grades of Fruits and Vegetables not connected with Federal Marketing Orders or U.S. Import Requirements, no longer appear in the Code of Federal Regulations, but are maintained by USDA, AMS, Fruit and Vegetable Programs.

AMS is establishing voluntary United States Standards for Grades of Mixed Commodities using the procedures that appear in Part 36, Title 7 of the Code of Federal Regulations (7 CFR part 36).

Background

AMS previously published a notice in the **Federal Register** (71 FR 3816–3817), on January 24, 2006, soliciting comments on the proposed voluntary United States Standards for Grades of Mixed Commodities. The proposed standards contained the U.S. Mixed grade. In addition, there were ''Sample Basis,'' ''Tolerances,'' and ''Application of Tolerances'' sections. AMS also defined ''Mixed,'' ''Injury,'' ''Damage,'' and ''Serious Damage.''

In response to the notice, a comment was received from an individual asking '' * * * how would commodities with tolerances of less than 10% be handled?'' The total tolerance in the United States Standards for Grades of Mixed Commodities would be 10 percent. Therefore, when commodities are being certified under the mixed commodities standards the 10 percent tolerance would apply regardless of the tolerances in the individual standards. Additionally, the commenter asked, ''Can commodities under a Marketing Order (with less than 10% tolerance, i.e. onions from Idaho and Eastern Oregon) be packed under this standard?'' Marketing orders are issued under the Agricultural Marketing Agreement Act of 1937 (7 U.S.C. 601–608) and commodities regulated under such orders must meet handling requirements that may include tolerances that differ from the 10 percent tolerance that appears in the mixed commodities standards. The voluntary mixed commodities standards are issued under the Agricultural Marketing Act of 1946 and the 10 percent total tolerance for such mixed commodities would be applicable to grading and certification under this program. Certification under the U.S. mixed commodities standard would not meet the requirements of the marketing order program.

The adoption of the U.S. grade standards will provide the mixed commodity industry with U.S. grade standards similar to those extensively in use by the fresh produce industry to assist in orderly marketing of other commodities.

The official grade of a lot of mixed commodities covered by these standards will be determined by the procedures set forth in the Regulations Governing Inspection, Certification, and Standards of Fresh Fruits, Vegetables, and Other Products (Sec. 51.1 to 51.61).

The United States Standards for Grades of Mixed Commodities will be effective 30 days after publication of this notice in the **Federal Register**.

Authority: 7 U.S.C. 1621–1627.

Dated: October 27, 2006.

Lloyd C. Day,

Administrator, Agricultural Marketing Service.

[FR Doc. E6–18514 Filed 11–1–06; 8:45 am]

BILLING CODE 3410–02–P

DEPARTMENT OF AGRICULTURE

Forest Service

Clearwater National Forest; ID; Selway Bitterroot Wilderness Invasive Plants Management Project

AGENCY: Forest Service, USDA.

ACTION: Notice of intent to prepare an environmental impact statement.

SUMMARY: The project proposes to contain and control the spread of non-native invasive plant species within the Selway Bitterroot Wilderness and non-Wilderness lands forming the margins of the Wilderness. Chemical and biological treatments are proposed along with other site-specific methods such as hand pulling and grubbing. All treatments would be ground-based.

DATES: Comments concerning this analysis must be received by December 1, 2006. The draft environmental impact statement is expected in October, 2007 and the final environmental impact statement is expected April, 2008.

ADDRESSES: Written comments concerning this notice or a request to be placed on the project mailing list should

be addressed to: Chad Benson (*cbenson@fs.fed.us*), district Ranger, Powell Ranger Station, Lolo, MT 59847. Electronic comments may be submitted to: *comments-northern-clearwater@fs.fed.us*. If you choose to comment by e-mail, please include your name and regular mailing address with your comment. The subject line must contain the name of the project for which you are submitting comments (i.e. SBW invasive Plants Project). Acceptable formats are MS Word, WordPerfect, or RTF.

All comments, including names and address when provided, are placed in the record and are available for public inspection and copying. The public may inspect comments received at the Powell Ranger District Office.

FOR FURTHER INFORMATION CONTACT: Chad Benson, District Ranger, Powell Ranger District. Phone: (208) 942–0307. Additional information is also available on the Forest Web site at *http://www.fs.fed.us/r1/clearwater/Projects*.

SUPPLEMENTARY INFORMATION:

Project Area

The project area consists of the entire Selway Bitterroot Wilderness (1,348,000 acres) as well as key areas adjacent to the wilderness on the Nez Perce, Clearwater, Bitterroot, and Lolo National Forests in western Montana and north central Idaho. Non-wilderness areas involve portions of the road and trail network leading into or passing through the wilderness and other specifically identified priority area. The project area is approximately 1,398,000 acres in size.

Purpose and Need for Action

Non-native invasive plants are a growing problem in the Selway Bitterroot Wilderness and surrounding areas. Without efforts to control these weeds, they will continue to expand into new areas and the number of new weed species will increase. The purpose of this project is to prevent the establishment of new invaders and reduce the impacts of established invasive plants on native plant community stability, sustainability and diversity within the Selway Bitterroot Wilderness.

Inside the Selway Bitterroot Wilderness, approximately 111,000 acres are currently occupied to some degree by spotted knapweek sulfur cinquefoil, St. Johnswort (goatweed) and oxeye daisy. Spotted knapweek accounts for approximately 90 percent of the occupied acres. Newer invaders such as Dalmatian toadflax, musk thistle, and meadow hawkweed occupy very small acreages at the present time. Outside the Wilderness but within the project area, approximately 5,000 acres are occupied by invasive species with the potential to expand into new areas of the Wilderness.

Proposed Action

The National Forests of the Selway Bitterroot Wilderness propose to apply integrated and adaptive approaches to reduce the effects of non-native invasive plant species on natural plant communities and ecosystems within the project area. Approximately 500 to 1500 acres a year are proposed for physical treatments including: chemical treatments, hand pulling, and revegetation with native plants. Biological control organisms would be applied to approximately 10,000 additional acres within the project area. Aerial spray application is not proposed. Grazing of domestic animals to reduce weeds within the Wilderness is not proposed. All treatments and applications would be ground-based. The emphasis of the treatments would be to eradicate new invaders as they are discovered and to contain the spread of established non-native plants.

Possible Alternatives

The Forest Service will consider alternatives to the proposed action including a ''no action'' alternative in which none of the proposed activities would be implemented. Additional alternatives being considered examine varying levels and locations for the proposed activities to achieve the proposal's purpose and need, as well as respond to issues and other resource concerns.

Responsible Official

The Responsible Official is the Forest Supervisor of the Clearwater National Forest, 12730 Highway 12, Orofino, Idaho 83544. The Responsible Official will decide if the proposed project will be implemented and will document the decision and reasons for the decision in a Record of Decision. That decision will be subject to Forest Service Appeal Regulations. The responsibility for preparing the DEIS and FEIS has been delegated to the District Ranger, Powell Ranger Station, Lolo, MT 59847.

Nature of Decision To Be Made

The decision would specify methods and materials to be used or applied to contain and control unwanted plant species within the project area. The decision would specify the areas to be treated as well as the terms and conditions under which treatment methods and materials would be applied. Administrative actions to monitor effects and effectiveness as well as promote prevention through public awareness and education would also be specified. The anticipated life of the decision would be 10 to 15 years.

Scoping Process

Each of the National Forests managing a portion of the Selway Bitterroot Wilderness maintains a listing of individuals and organizations that have expressed an interest in being informed of and providing input to projects including these types of activities or in this specific location. All of these contacts will be sent the initial scoping document. A legal notice describing the scoping process will be published in the paper of record for each of the National Forests.

Comment Requested

This notice of intent initiates the scoping process which guides the development of the environmental impact statement. Early Notice of Importance of Public Participation in Subsequent Environmental Review: A draft environmental impact statement will be prepared for comment. The comment period on the draft environmental impact statement will be 45 days from the date the Environmental Protection Agency publishes the notice of availability in the **Federal Register**.

The Forest Service believes, at this early stage it is important to give reviewers notice of several court ruling related to public participation in the environmental review process. First, reviewers of draft environmental impact statements must structure their participation in the environmental review of the proposal so that it is meaningful and alerts an agency to the reviewer's position and contentions. *Vermont Yankee Nuclear Power Corp.* v. *NRDC*, 435 U.S. 519, 553 (1978). Also, environmental objections that could be raised at the draft environmental impact statement stage but that are not raised until after completion of the final environmental impact statement may be waived or dismissed by the courts. *City of Angoon* v. *Hodel*, 803 F.2d 1016, 1022 (9th Cir. 1986) and *Wisconsin Heritages, Inc.* v. *Harris*, 490 F. Supp. 1334, 1338 (E.D. Wis. 1980). Because of these court rulings, it is very important that those interested in this proposed action participate by the close of the 45-day comment period so that substantive comments and objections are made available to the Forest Service at a time when it can meaningfully consider them and respond to them in the final environmental impact statement.

To assist the Forest Service in identifying and considering issues and concerns on the proposed action, comments on the draft environmental impact statement should be as specific as possible. It is also helpful if comments refer to specific pages or chapters of the draft statement. Comments may also address the adequacy of the draft environmental impact statement or the merits of the alternatives formulated and discussed in the statement. Reviewers may wish to refer to the Council on Environmental Quality Regulations for implementing the procedural provisions of the National Environmental Policy Act at 40 CFR 1503.3 in addressing these points.

Comments received, including the names and addresses of those who comment, will be considered part of the public record on this proposal and will be available for public inspection.

(Authority: 40 CFR 1501.7 and 1508.22; Forest Service Handbook 1909.15, Section 21)

Dated: October 26, 2006.

Thomas K. Reilly,

Forest Supervisor.

[FR Doc. 06–9016 Filed 11–1–06; 8:45 am]

BILLING CODE 3410–11–M

DEPARTMENT OF AGRICULTURE

Natural Resources Conservation Service

Notice of Meeting of the Agricultural Air Quality Task Force

AGENCY: Natural Resources Conservation Service (NRCS), Department of Agriculture.

ACTION: Notice of meeting.

SUMMARY: The Agricultural Air Quality Task Force (AAQTF) will meet to continue discussions on air quality issues relating to agriculture.

DATES: The meeting will convene on Tuesday, November 28, 2006, through Thursday, November 30, 2006. Public comment periods will be held on November 29 and 30. Individuals making oral presentations should register in person at the meeting site and must bring with them 50 copies of any materials they would like distributed. Written materials for the AAQTF's consideration prior to the meeting must be received by Dr. Diane E. Gelburd no later than Friday, November 3, 2006.

ADDRESSES: The meeting will be held at the Holiday Inn on the Hill, 415 New Jersey Avenue, SW., Washington, DC, 20001; *telephone:* (202) 638–1616, or (800) 638–1116.

FOR FURTHER INFORMATION CONTACT: Questions and comments should be directed to Dr. Diane E. Gelburd, Designated Federal Officer. Dr. Gelburd may be contacted at USDA, NRCS, 1400 Independence Avenue, SW., Room 6158-South, Washington, DC 20250; telephone: (202) 720–2587; e-mail: *Diane.Gelburd@wdc.usda.gov*.

SUPPLEMENTARY INFORMATION: Notice of this meeting is given under the Federal Advisory Committee Act, 5 U.S.C. App. 2. Additional information concerning the AAQTF may be found on the Internet at *http://www.airquality.nrcs.usda.gov/AAQTF/*.

Draft Agenda of the November 28–30, 2006 Meeting of the AAQTF

A. *Welcome to Washington, DC.*
B. *Discussion of Minutes from Previous Meeting.*
C. *Discussion of Objectives for the Task Force and Federal Advisory Committee Act (FACA Rules and Responsibilities).*
D. *Scientific Updates and Presentations.*
E. *Policy Discussions—USDA and Environmental Protection Agency (EPA) Officials.*
F. *USDA Update.*
G. *EPA Update.*
H. *Next Meeting, Time and Place.*
I. *Public Comments.*

(Time will be reserved on November 29 and November 30 to receive public comments. Individual presentations will be limited to 5 minutes.)

Procedural

This meeting is open to the public. At the discretion of the Chair, members of the public may give oral presentations during the meeting. Those persons wishing to make oral presentations should register in person at the meeting site. Those wishing to distribute written materials at the meeting (in conjunction with spoken comments) must bring 50 copies of the materials with them. Written materials for distribution to AAQTF members prior to the meeting must be received by Dr. Gelburd no later than Friday, November 3, 2006.

Information on Services for Individuals With Disabilities

For information on facilities or services for individuals with disabilities, or to request special assistance at the meeting, please contact Dr. Gelburd. USDA prohibits discrimination in its programs and activities on the basis of race, color, national origin, gender, religion, age, sexual orientation, or disability. Additionally, discrimination on the basis of political beliefs and marital or family status is also prohibited by statutes enforced by USDA (not all prohibited bases apply to all programs). Persons with disabilities who require alternate means for communication of program information (Braille, large print, audio tape, etc.) should contact the USDA's Target Center at (202) 720–2000 (voice and TDD). USDA is an equal opportunity provider and employer.

Signed in Washington, DC, on October 23, 2006.

Arlen L. Lancaster,

Chief.

[FR Doc. E6–18491 Filed 11–1–06; 8:45 am]

BILLING CODE 3410–16–P

DEPARTMENT OF COMMERCE

National Oceanic and Atmospheric Administration

Climate Change Science Program (CCSP) Product Development Committee (CPDC) for Synthesis and Assessment Product 1.3

ACTION: Notice to establish the National Oceanic and Atmospheric Administration (NOAA) Climate Change Science Program (CCSP) Product Development Committee (CPDC) for Synthesis and Assessment Product 1.3 (CPDC—S&A 1.3) under the provisions of the Federal Advisory Committee Act.

SUMMARY: In accordance with the provisions of the Federal Advisory Committee Act, 5 U.S.C. app. 2, and the General Services Administration (GSA) rule of Federal Advisory Committee Management, 41 CFR part 102–3, and after consultation with GSA, the Secretary of Commerce has determined that the establishment of the National Oceanic and Atmospheric Administration (NOAA) Climate Change Science Program (CCSP) Product Development Committee (CPDC) for Synthesis and Assessment Product 1.3 (CPDC—S&A 1.3) is in the public interest, in connection with the performance of duties imposed on the Department by law. The CPDC—S&A 1.3 will advise the Secretary, through the Under Secretary of Commerce for Oceans and Atmosphere, on CCSP Topic 1.3: ''Re-analyses of historical climate data for key atmospheric features: Implications for attribution of causes of observed change''. This advice will be provided in the form of a draft Synthesis and Assessment product intended to be used by NOAA to develop a final product in accordance with the *Guidelines for Producing the CCSP Synthesis and Assessment*

Products, the OMB Peer Review bulletin, and the Information Quality Act guidelines. The CPDC—S&A 1.3 will consist of no more than 20 members to be appointed by the Under Secretary to assure a balanced representation among preeminent scientists, educators, and experts reflecting the full scope of the scientific issues addressed in CCSP Synthesis and Assessment Product 1.3. The CPDC—S&A 1.3 will function solely as an advisory body, and in compliance with the provisions of the Federal Advisory Committee Act. Its charter will be filed under the Act, fifteen days from the date of publication of this notice.

FOR FURTHER INFORMATION CONTACT: CPDC—S&A 1.3 DFO and Dr. Ming Ji, Program Manager, NOAA/OAR/Climate Program Office, Climate Dynamics and Experimental Prediction Program, 1100 Wayne Avenue, Suite 1215, Silver Spring, Maryland 20910; telephone 301–427–2373, e-mail: *Ming.Ji@noaa.gov.*

Dated: October 26, 2006.

Mark E. Brown,

Chief Financial Officer, Office of Oceanic and Atmospheric Research, National Oceanic and Atmospheric Administration.

[FR Doc. 06–9017 Filed 11–1–06; 8:45 am]

BILLING CODE 3510–22–M

DEPARTMENT OF COMMERCE

National Oceanic and Atmospheric Administration

[I.D. 092006B]

Endangered and Threatened Species; Recovery Plan for White Abalone

AGENCY: National Marine Fisheries Service (NMFS), National Oceanic and Atmospheric Administration (NOAA), Commerce.

ACTION: Notice of Availability; request for comments.

SUMMARY: The National Marine Fisheries Service (NMFS) announces the availability of the draft White Abalone Recovery Plan (Plan) for public review. NMFS is soliciting review and comment from the public and all interested parties on the Plan, and will consider all substantive comments received during the review period before submitting the Plan for final approval.

DATES: Comments on the draft Plan must be received by close of business on December 18, 2006.

ADDRESSES: You may submit comments by any of the following methods:

- E-Mail: *whiteabalone.recoveryplan@noaa.gov.*
- Fax: 1–562–980–4027, Attention: Melissa Neuman.
- Mail: Submit written information to Chief, Protected Resources Division, Southwest Region, National Marine Fisheries Service, 501 West Ocean Blvd., Suite 4200, Long Beach, CA 90802 4213.

The draft Plan can be obtained via the Internet at: *http://www.nmfs.noaa.gov* or by submitting a request to the Assistant Regional Administrator, Protected Resources Division, Southwest Region, NMFS, 501 West Ocean Blvd., Suite 4200, Long Beach, CA 90802–4213.

FOR FURTHER INFORMATION CONTACT: Melissa Neuman, NMFS, Southwest Region (562) 980–4115.

SUPPLEMENTARY INFORMATION: White abalone (*Haliotis sorenseni*) was listed as the first federally endangered marine invertebrate under the United States Endangered Species Act of 1973 (ESA) in May 2001. The ESA (15 U.S.C. 1531 *et seq.*) requires that NOAA's National Marine Fisheries Service (NMFS) develop and implement recovery plans for the conservation and survival of threatened and endangered species under its jurisdiction, unless it is determined that such plans would not promote the conservation of the species. Accordingly, during the summer of 2002, NMFS appointed a recovery team comprised of experts in the fields of abalone biology and ecology, conservation biology, genetics, population dynamics and modeling, pathology, aquaculture, and marine policy to develop a recovery plan as mandated by the ESA.

The purposes of this Recovery Plan are to: (1) delineate those aspects of white abalone biology, life history, and threats that are pertinent to its endangerment and recovery; (2) outline and justify a strategy to achieve recovery; (3) identify the actions necessary to achieve recovery; (4) identify goals and criteria by which to measure the achievement of recovery; (5) serve as an outreach tool by articulating the reasons for white abalone's endangerment, and by explaining why the particular suite of recovery actions described is the most effective and efficient approach to achieving recovery; (6) help potential cooperators and partners understand the rationale behind the recovery actions identified, and assist them in identifying how they can facilitate recovery; (7) serve as a tool for monitoring recovery activities; and (8) be used to obtain funding for NMFS and its partners by identifying necessary recovery actions and their relative priority in the recovery process. NMFS' ultimate goal is to increase white abalone abundance to viable and self-sustaining levels such that the species can be downlisted to threatened status and eventually removed from the Endangered Species List.

NMFS sought a scientific review of the draft Plan by 12 experts in October 2005. NMFS requested that the scientific reviewers consider: (1) issues and assumptions relating to the biological and ecological information of the draft Plan, and (2) scientific data relating to the tasks in the proposed recovery program. Four reviewers responded to NMFS' request. The recovery team reconvened in June 2006 to consider the reviewer's comments and incorporate changes to the draft Plan accordingly. NMFS will consider all substantive comments and information presented during the public comment period in the course of finalizing this Plan.

Dated: October 27, 2006.

Angela Somma,

Chief, Endangered Species Division, Office of Protected Resources, National Marine Fisheries Service.

[FR Doc. E6–18505 Filed 11–1–06; 8:45 am]

BILLING CODE 3510–22–S

DEPARTMENT OF COMMERCE

National Oceanic and Atmospheric Administration

[I.D. 102706C]

Marine Mammals; File No. 775–1600

AGENCY: National Marine Fisheries Service (NMFS), National Oceanic and Atmospheric Administration (NOAA), Commerce.

ACTION: Notice; receipt of application for amendment.

SUMMARY: Notice is hereby given that the Northeast Fisheries Science Center, NMFS,166 Water Street, Woods Hole, Massachusetts 02543–1026 [Principal Investigator (PI): Dr. Richard Merrick] has requested a major amendment to Permit No. 775–1600 to take northern right whales (*Eubalaena glacialis*) for purposes of scientific research.

ADDRESSES: The amendment request and related documents are available for review upon written request or by appointment in the following office(s):

Permits, Conservation and Education Division, Office of Protected Resources, NMFS, 1315 East-West Highway, Room 13705, Silver Spring, MD 20910; phone (301)713–2289; fax (301)713–0376;

Northeast Region, NMFS, One Blackburn Drive, Gloucester, MA

01930–2298; phone (978)281–9200; fax (978)281–9371;

Southeast Region, NMFS, 9721 Executive Center Drive North, St. Petersburg, FL 33702–2432; phone (727)570–5301; fax (727)570–5320.

Written comments or requests for a public hearing on this request should be submitted to the Chief, Permits, Conservation and Education Division, F/PR1, Office of Protected Resources, NMFS, 1315 East-West Highway, Room 13705, Silver Spring, MD 20910. Those individuals requesting a hearing should set forth the specific reasons why a hearing on this particular amendment request would be appropriate.

Comments may also be submitted by facsimile at (301)427–2521, provided the facsimile is confirmed by hard copy submitted by mail and postmarked no later than the closing date of the comment period.

Comments may also be submitted by e-mail. The mailbox address for providing e-mail comments is *NMFS.Pr1Comments@noaa.gov*. Include in the subject line of the e-mail comment the following document identifier: File No. 775–1600.

FOR FURTHER INFORMATION CONTACT: Carrie Hubard or Amy Hapeman, (301)713–2289.

SUPPLEMENTARY INFORMATION: On October 27, 2000, notice was published in the **Federal Register** (65 FR 64432) that a request for a scientific research permit to take seven species of baleen whale, 21 species of odontocetes, and four species of pinnipeds had been submitted by the above-named organization. Permit No. 775–1600–00 was issued on March 6, 2001 (66 FR 14135) and subsequently amended ten times for various purposes. Amendment No. 7 of the permit, named Permit No. 775–1600–07 (69 FR 10680; March 8, 2004), and subsequent amendments allowed biopsy sampling of up to 15 right whale calves less than six months old per year. The Permit Holder has requested that the number of right whale calves less than six months old that may be biopsy sampled, including on the Southeastern US calving grounds, be increased to 30 per year to account for inter-annual variation in the number of calves born each year. The purpose of this amendment is consistent with the objectives in the original application related to genetically identifying (via biopsy sampling) northern right whales.

Concurrent with the publication of this notice in the **Federal Register**, NMFS is forwarding copies of this application to the Marine Mammal Commission and its Committee of Scientific Advisors.

Dated: October 27, 2006.

P. Michael Payne,

Chief, Permits, Conservation and Education Division, Office of Protected Resources, National Marine Fisheries Service.

[FR Doc. E6–18503 Filed 11–1–06; 8:45 am]

BILLING CODE 3510–22–S

DEPARTMENT OF DEFENSE

Office of the Secretary

Base Closure and Realignment

AGENCY: Department of Defense, Office of Economic Adjustment.

ACTION: Notice.

SUMMARY: On October 23, 2006 the Department of Defense published a notice on Base Closure and Realignment. This notice corrects an error in the telephone number for Fort Hayes Memorial USARC.

FOR FURTHER INFORMATION CONTACT: Director, Office of Economic Adjustment, Office the Secretary of Defense, 400 Army Navy Drive, Suite 200, Arlington, VA 22202–43704, 703–604–6020.

Correction

In **Federal Register** at 71 FR 62096, telephone number for Ohio is corrected to read 614–645–8036.

Dated: October 27, 2006.

L.M. Bynum,

Alternate OSD Federal Register Liaison Officer, DoD.

[FR Doc. 06–9018 Filed 11–1–06; 8:45 am]

BILLING CODE 5001–06–M

DEPARTMENT OF DEFENSE

Department of the Navy

Privacy Act of 1974; System of Records

AGENCY: Department of the Navy.

ACTION: Notice to delete systems of records.

SUMMARY: The Department of the Navy is deleting two systems of records notices from its existing inventory of records systems subject to the Privacy Act of 1974, (5 U.S.C. 552a), as amended.

DATES: Effective November 2, 2006.

ADDRESSES: Department of the Navy, PA/FOIA Policy Branch, Chief of Naval Operations, (DNS–36), 2000 Navy Pentagon, Washington, DC 20350–2000.

FOR FURTHER INFORMATION CONTACT: Ms. Doris Lama at (202) 685–6545.

SUPPLEMENTARY INFORMATION: The Department of the Navy systems of records notices subject to the Privacy Act of 1974, (5 U.S.C. 552a), as amended, have been published in the **Federal Register** and are available from the address above.

The proposed deletions are not within the purview of subsection (r) of the Privacy Act of 1974, (5 U.S.C. 552a), as amended, which requires the submission of a new or altered system report.

Dated: October 26, 2006.

C.R. Choate,

Alternate OSD Federal Register Liaison Officer, Department of Defense.

N04064–1

SYSTEM NAME:

USNA Laundry-Drycleaning Computer Business System (April 12, 1999, 64 FR 17645).

REASON:

The Department of Navy no longer uses these records; therefore, the system of records is being deleted. All records have been destroyed.

N04064–2

SYSTEM NAME:

USNA Retail Customer Claim Record (April 12, 1999, 64 FR 17645).

REASON:

The Department of Navy no longer uses these records; therefore, the system of records is being deleted. All records have been destroyed.

[FR Doc. 06–8999 Filed 11–1–06; 8:45 am]

BILLING CODE 5001–06–M

DEPARTMENT OF ENERGY

Office of Energy Efficiency and Renewable Energy

Hydrogen and Fuel Cell Technical Advisory Committee (HTAC)

AGENCY: Office of Energy Efficiency and Renewable Energy, Department of Energy.

ACTION: Notice of open teleconference meeting.

SUMMARY: The Hydrogen and Fuel Cell Technical Advisory Committee (HTAC) held its first meeting on October 2–3, 2006. At that time, it was suggested that a conference call take place on November 17, 2006. The Federal Advisory Committee Act (Pub. L. 92–463, 86 Stat. 770) requires that agencies

publish these notices in the **Federal Register.** This notice fulfills that requirement. The public is permitted to listen in but is not permitted to comment until the end of the call at which time public comments will be taken.

DATES: The conference call will begin on November 17, 2006, at noon EST and will conclude at approximately 2 p.m. EST.

FOR FURTHER INFORMATION CONTACT: *HTAC.Committee@ee.doe.gov.*

SUPPLEMENTARY INFORMATION:

Purpose of Conference Call: To complete agenda items not fully addressed at the meeting on October 2–3, 2006. The Committee is chartered to provide advice, information, and recommendations to the Secretary on the program authorized by Title VIII, Hydrogen, of EPACT.

Tentative Agenda: Agenda items will include discussion: HTAC structure, subcommittees, work plan for FY 2007, and other Committee business.

Public Participation: In keeping with procedures, members of the public are welcome to listen in on the business of HTAC and to make oral statements during the specific public comment period. To attend the conference call and/or to make oral statements, e-mail *HTAC.Committee@ee.doe.gov* no later than November 7, 2006. (Please indicate if you will be making an oral statement.) Members of the public will be permitted to participate on a first come/first serve basis. Oral comments should be limited to two minutes in length. Reasonable provision will be made to include all scheduled oral statements. The Chair of the Committee will make every effort to hear the views of all interested parties and to facilitate the orderly conduct of business. If you would like to file a written statement with the Committee, you may do at any time (electronic and hard copy).

Minutes: The minutes of Committee meetings will be available for public review and copying at the Freedom of Information Public Reading Room; Room 1E–190, Forrestal Building, 1000 Independence Avenue, SW., Washington, DC 20585, between 9 a.m. and 4 p.m., Monday through Friday, except Federal holidays.

Issued at Washington, DC on October 26, 2006.

Rachel Samuel,

Deputy Advisory Committee Management Officer.

[FR Doc. E6–18555 Filed 11–1–06; 8:45 am]

BILLING CODE 6450–01–P

ENVIRONMENTAL PROTECTION AGENCY

[EPA–HQ–OECA–2006–0426; FRL–8238–3]

Agency Information Collection Activities: Submission to OMB for Review and Approval; Comment Request; NSPS for Fossil Fuel Fired Steam Generating Units (Renewal); EPA ICR Number 1052.08, OMB Control Number 2060–0026

AGENCY: Environmental Protection Agency (EPA).

ACTION: Notice.

SUMMARY: In compliance with the Paperwork Reduction Act (44 U.S.C. 3501 *et seq.*), this document announces that the following Information Collection Request (ICR) has been forwarded to the Office of Management and Budget (OMB) for review and approval. The ICR which is abstracted below describes the nature of the information collection and its estimated burden and cost.

DATES: Additional comments must be submitted on or before December 4, 2006.

ADDRESSES: Submit your comments, referencing docket ID number EPA–HQ–OECA–2006–0426, to (1) EPA online using *http://www.regulations.gov* (our preferred method), or by e-mail to *docket.oeca@epa.gov* or by mail to EPA Docket Center (EPA/DC), Environmental Protection Agency, Enforcement and Compliance Docket and Information Center, mail code: 2201T, 1200 Pennsylvania Avenue, NW., Washington, DC 20460, and (2) OMB at: Office of Information and Regulatory Affairs, Office of Management and Budget (OMB), Attention: Desk Officer for EPA, 725 17th Street, NW., Washington, DC 20503.

Note: The EPA Docket Center suffered damage due to flooding during the last week of June 2006. The Docket Center is continuing to operate. However, during the cleanup, there will be temporary changes to Docket Center telephone numbers, addresses, and hours of operation by people who wish to visit the Public Reading Room to view documents. Consult EPA's **Federal Register** notice at 71 FR 38147 (July 15, 2006) or the EPA Web site at *http://www.epa.gov/epahome/dockets.htm* for current information on docket status; locations and telephone numbers.

FOR FURTHER INFORMATION CONTACT: Zofia Kosim, Air Enforcement Division, Office of Civil Enforcement, Mail Code 2242A, Environmental Protection Agency, 1200 Pennsylvania Avenue, NW., Washington, DC 20460; telephone number (202) 564–8733; fax number (202) 564–0068; E-mail address *kosim.zofia@epa.gov.* Refer to EPA ICR Number 1052.08.

SUPPLEMENTARY INFORMATION: EPA has submitted the following ICR to OMB for review and approval according to the procedures prescribed in 5 CFR 1320.12. On June 21, 2006 (71 FR 35652), EPA sought comments on this ICR pursuant to 5 CFR 1320.8(d). EPA received no comments.

EPA has established a public docket for this ICR under docket ID number EPA–HQ–OECA–0426, which is available for public viewing online at *http://www.regulations.gov*, or in person viewing at the Enforcement and Compliance Docket and Information Center in the EPA Docket Center, (EPA/DC) EPA West, Room B102, 1301 Constitution Avenue, NW., Washington, DC. The EPA Docket Center Public Reading Room is open from 8:30 a.m. to 4:30 p.m., Monday through Friday, excluding legal holidays. The telephone number for the Reading Room is (202) 566–1744, and the telephone number for the Enforcement and Compliance Docket and Information Center is (202) 566–1752.

Use EPA's electronic docket and comment system at *http://www.regulations.gov,* to submit or view public comments, access the index listing of the contents of the docket, and to access those documents in the docket that are available electronically. Once in the system, select ''search,'' then key in the docket ID number identified above. Please note that EPA's policy is that public comments, whether submitted electronically or in paper, will be made available for public viewing at *http://www.regulations.gov*, as EPA receives them and without change, unless the comment contains copyrighted material, CBI, or other information whose public disclosure is restricted by statute. For further information about the electronic docket, go to *http://www.regulations.gov.*

Title: NSPS for Fossil-Fuel-Fired Steam Generating Units (Renewal).

ICR Numbers: EPA ICR Number 1052.08, OMB Control Number 2060–0026.

ICR Status: This is a request to renew an existing approved collection that will expire on November 30, 2006. Under the OMB regulations, the Agency may continue to conduct or sponsor the collection of information while this submission is pending at OMB. An Agency may not conduct or sponsor, and a person is not required to respond to, a collection of information unless it displays a currently valid OMB control number. The OMB control number for

EPA's regulations in title 40 of the CFR, after appearing in the **Federal Register** when approved, are listed in 40 CFR part 9, and displayed either by publication in the **Federal Register** or by other appropriate means, such as on the related collection instrument or form, if applicable. The display of OMB control numbers in certain EPA regulations is consolidated in 40 CFR part 9.

Abstract: Owners or operators of steam generating units subject to Subpart D must make one-time-only notifications of construction/reconstruction, anticipated and actual startup, initial performance test, physical or operational changes, and demonstration of a continuous monitoring system. They must also submit reports on initial performance test results, monitoring system performance, and excess emissions. Records must be maintained of startups, shutdowns, malfunctions, and periods when the continuous monitoring system is inoperative.

The required notifications are used to inform the Agency or delegated authority when a source becomes subject to the standard. Performance test reports are needed as these are the Agency's record of a source's initial capability to comply with the emission standard, and serve as a record of the operating conditions under which compliance was achieved. The monitoring and excess emissions reports (which are semiannual) are used for problem identification, as a check on source operation and maintenance, and for compliance determinations. The information collected from recordkeeping and reporting requirements are used for targeting inspections, and for other uses in compliance and enforcement programs.

Responses to this information collection are deemed to be mandatory, per section 114(a) of the Clean Air Act. The required information consists of emissions data and other information that have been determined not to be private. However, any information submitted to the Agency for which a claim of confidentiality is made will be safeguarded according to the Agency policies set forth in Title 40, chapter 1, part 2, subpart B—Confidentiality of Business Information (CBI) (see 40 CFR part 2; 41 FR 36902, September 1, 1976; amended by 43 FR 40000, September 8, 1978; 43 FR 42251, September 20, 1978; 44 FR 17674, March 23, 1979).

Burden Statement: The annual public reporting and recordkeeping burden for this collection of information is estimated to average 46.6 hours per response. Burden means the total time, effort, or financial resources expended by persons to generate, maintain, retain, or disclose or provide information to or for a Federal agency. This includes the time needed to review instructions; develop, acquire, install, and utilize technology and systems for the purposes of collecting, validating, and verifying information, processing and maintaining information, and disclosing and providing information; adjust the existing ways to comply with any previously applicable instructions and requirements; train personnel to respond to a collection of information; search data sources; complete and review the collection of information; and transmit or otherwise disclose the information.

Respondents/Affected Entities: Owners or operators of fossil-fuel-fired steam generating units.

Estimated Number of Respondents: 660.

Frequency of Response: Semiannual.

Estimated Total Annual Hour Burden: 61,545 hours.

Estimated Total Annual Cost: $13,415,450, which includes $0 annualized capital start up costs, $9,900,000 Operations & Maintenance (O & M) annual costs, and $3,515,450 annual labor costs.

Changes in Estimates: There is no change of hours in the total estimated burden currently identified in the OMB inventory of Approved ICR Burdens.

Dated: October 25, 2006.

Oscar Morales,

Director, Collection Strategies Division.

[FR Doc. E6–18488 Filed 11–1–06; 8:45 am]

BILLING CODE 6560–50–P

ENVIRONMENTAL PROTECTION AGENCY

[EPA–HQ–OECA–2006–0427; FRL–8238–2]

Agency Information Collection Activities; Submission to OMB for Review and Approval; Comment Request; NSPS for Nonmetallic Mineral Processing (Renewal), EPA ICR Number 1084.08, OMB Control Number 2060–0050

AGENCY: Environmental Protection Agency (EPA).

ACTION: Notice.

SUMMARY: In compliance with the Paperwork Reduction Act (44 U.S.C. 3501 *et seq.*), this document announces that an Information Collection Request (ICR) has been forwarded to the Office of Management and Budget (OMB) for review and approval. This is a request to renew an existing approved collection. The ICR which is abstracted below describes the nature of the collection and the estimated burden and cost.

DATES: Additional comments may be submitted on or before December 4, 2006.

ADDRESSES: Submit your comments, referencing docket ID number EPA–OECA–2006–0427, to (1) EPA online using *www.regulations.gov* (our preferred method), or by e-mail to *docket.oeca@epa.gov*, or by mail to: EPA Docket Center (EPA/DC), Environmental Protection Agency, Enforcement and Compliance Docket and Information Center, mail code 2201T, 1200 Pennsylvania Avenue, NW., Washington, DC 20460, and (2) OMB at: Office of Information and Regulatory Affairs, Office of Management and Budget (OMB), *Attention:* Desk Officer for EPA, 725 17th Street, NW., Washington, DC 20503.

Note: The EPA Docket Center suffered damage due to flooding during the last week of June 2006. The Docket Center is continuing to operate. However, during the cleanup, there will be temporary changes to Docket Center telephone numbers, addresses, and hours of operation by people who wish to visit the Public Reading Room to view documents. Consult EPA's **Federal Register** notice at 71FR 38147 (July 15, 2006) or the EPA Web site at *http://www.epa.gov/epahome/dockets.htm* for current information on docket status; locations and telephone numbers.

FOR FURTHER INFORMATION CONTACT: Gregory Fried, Office of Compliance, Assessment and Medium Programs Division (CAMPD), Mail Code 2223A, Environmental Protection Agency, 1200 Pennsylvania Avenue, NW., Washington, DC 20460; *telephone number:* (202) 564–7016; *fax number:* (202) 564–0050; *e-mail address: fried.gregory@epa.gov*.

SUPPLEMENTARY INFORMATION: EPA has submitted the following ICR to OMB for review and approval according to the procedures prescribed in 5 CFR 1320.12. On June 21, 2006, (71 FR 35652), EPA sought comments on this ICR pursuant to 5 CFR 1320.8(d). EPA received no comments. Any additional comments on this ICR should be submitted to EPA and OMB within 30 days of this notice.

EPA has established a public docket for this ICR under docket ID number EPA–HQ–OECA–2006–0427, which is available for public viewing online at *http://www.regulations.gov*, or, in person viewing at the Enforcement and Compliance Docket in the EPA Docket Center (EPA/DC), EPA West, Room B102, 1301 Constitution Avenue, NW., Washington, DC. The EPA Docket

Center Public Reading Room is open from 8:30 a.m. to 4:30 p.m., Monday through Friday, excluding legal holidays. The telephone number for the Reading Room is (202) 566–1744, and the telephone number for the Enforcement and Compliance Docket is (202) 566–1927.

Use EPA's electronic docket and comment system at *http://www.regulations.gov*, to submit or view public comments, access the index listing of the contents of the docket, and to access those documents in the docket that are available electronically. Once in the system, select ''docket search,'' then key in the docket ID number identified above. Please note that EPA's policy is that public comments, whether submitted electronically or in paper, will be made available for public viewing at *http://www.regulations.gov*, as EPA receives them and without change, unless the comment contains copyrighted material, Confidential Business Information (CBI), or other information whose public disclosure is restricted by statute. For further information about the electronic docket, go to *http://www.regulations.gov*.

Title: NSPS for Nonmetallic Mineral Processing (Renewal).

ICR Numbers: EPA ICR Number 1084.08, OMB Control Number 2060–0050.

ICR Status: This ICR is scheduled to expire on November 30, 2006. Under OMB regulations, the Agency may continue to conduct or sponsor the collection of information while this submission is pending at OMB. An Agency may not conduct or sponsor, and a person is not required to respond to, a collection of information unless it displays a currently valid OMB control number. The OMB control numbers for EPA's regulations in title 40 of the CFR, after appearing in the **Federal Register** when approved, are listed in 40 CFR part 9, and displayed either by publication in the **Federal Register** or by other appropriate means, such as on the related collection instrument or form, if applicable. The display of OMB control numbers in certain EPA regulations is consolidated in 40 CFR part 9.

Abstract: The Administrator has judged that PM emissions from nonmetallic mineral processing plants cause or contribute to air pollution that may reasonably be anticipated to endanger public health or welfare. This standard applies to owners or operators of new, modified, or reconstructed facilities at nonmetallic mineral processing plants that commenced construction, modification, or reconstruction after August 1, 1985. Nonmetallic mineral processing includes the following affected facilities: each crusher, grinding mill, screening operation, bucket elevator, belt conveyor, bagging operation, storage bin, and enclosed truck or railcar loading station. This standard does not apply to facilities located in underground mines; stand-alone screening operations; operations that only involve recycled asphalt; fixed sand gravel, or crushed stone plants with capacities of 25 tons per hour or less; portable sand, gravel, or crushed stone plants with capacities of 150 tons per hour or less; common clay or pumice plants with capacities of 10 tons per hour or less. Additionally, when an existing facility is replaced by a piece of equipment of equal or smaller size it is not subject to the standard until all facilities in a production line are replaced. Affected facilities in the plant process that are subject to 40 CFR part 60, subpart F, for Portland Cement NSPS, or subpart I, Asphalt Concrete Plants NSPS, are not subject to this NSPS.

Respondents must submit the following one-time-only reports: notification of the date of construction or reconstruction, notification of the actual date of initial startup, notification of any physical or operational change to an existing facility which may increase the regulated pollutant emission rate, notification of demonstration of the continuous emission monitor system (CMS) where the CMS is required (wet scrubber), notification of the date of the initial performance test, and the results of the initial performance test. Wet mining/screening operations are exempt from all requirements of the regulation, except an initial report and record describing the location of these operations. The general provision requirement to submit a notification of the anticipated date of initial startup is being waived for respondents subject to this standard. The required notifications are used to inform the Agency or delegated authority when a source becomes subject to the standard.

Respondents are also required to maintain records of the occurrence and duration of any startup, shutdown, or malfunction in the operation of an affected facility, or any period during which the monitoring system is inoperative. Owners or operators of facilities using a wet scrubber must record the measurements of both the change in pressure of the gas stream across the scrubber and the scrubbing liquid flow rate and submit semiannual reports for occurrences when the measurements of the scrubber pressure loss (or gain) and liquid flow rate differ by more than ±30 percent from the averaged determined during the most recent performance test. All records shall be retained for at least two years. The information collected from recordkeeping and reporting requirements are necessary to ensure compliance with these standards, as required by section 114(a) of the Clean Air Act.

Burden Statement: The annual public reporting and recordkeeping burden for this collection of information is estimated to average 5.6 hours per response. Burden means the total time, effort, or financial resources expended by persons to generate, maintain, retain, or disclose or provide information to or for a Federal agency. This includes the time needed to review instructions; develop, acquire, install, and utilize technology and systems for the purposes of collecting, validating, and verifying information, processing and maintaining information, and disclosing and providing information; adjust the existing ways to comply with any previously applicable instructions and requirements which have subsequently changed; train personnel to be able to respond to a collection of information; search data sources; complete and review the collection of information; and transmit or otherwise disclose the information.

Respondents/Affected Entities: Nonmetallic mineral processing plants.

Estimated Number of Respondents: 3,825.

Frequency of Response: Initial.

Estimated Total Annual Hour Burden: 31,026.

Estimated Total Annual Cost: $1,772,177 which includes $0 annualized capital startup costs, $0 annualized O&M costs, and $1,772,177 annualized labor costs.

Changes in the Estimates: There is no change in the estimates from the previous ICR.

Dated: October 26, 2006.

Oscar Morales,

Director, Collection Strategies Division.

[FR Doc. E6–18489 Filed 11–1–06; 8:45 am]

BILLING CODE 6560–50–P

ENVIRONMENTAL PROTECTION AGENCY

[EPA–HQ–ORD–2006–0270; FRL–8238–6]

Agency Information Collection Activities; Submission to OMB for Review and Approval; Comment Request; Contribution of Household Activities to the Health of Urban Ecosystems; EPA ICR No. 2223.01

AGENCY: Environmental Protection Agency (EPA).

ACTION: Notice.

SUMMARY: In compliance with the Paperwork Reduction Act (PRA)(44 U.S.C. 3501 *et seq.*), this document announces that an Information Collection Request (ICR) has been forwarded to the Office of Management and Budget (OMB) for review and approval. This is a request or a new collection. The ICR, which is abstracted below, describes the nature of the information collection and its estimated burden and cost.

DATES: Additional comments may be submitted on or before December 4, 2006.

ADDRESSES: Submit your comments, referencing Docket ID No. EPA–HQ–ORD–2006–0270, to (1) EPA online using *www.regulations.gov* (our preferred method), by e-mail to *ord.docket@epa.gov,* or by mail to: EPA Docket Center, Environmental Protection Agency, Office of Research and Development Docket, Mailcode 2822T, 1200 Pennsylvania Ave., NW., Washington, DC 20460, and (2) OMB by mail to: Office of Information and Regulatory Affairs, Office of Management and Budget (OMB), Attention: Desk Officer for EPA, 725 17th Street, NW., Washington, DC 20503.

FOR FURTHER INFORMATION CONTACT: Anita Morzillo, Office of Research and Development, Environmental Protection Agency, 200 SW. 35th St., Corvallis, OR 97333; telephone number: 541–754–4738; fax number: 541–754–4299; *morzillo.anita@epa.gov.*

SUPPLEMENTARY INFORMATION: EPA has submitted the following ICR to OMB for review and approval according to the procedures prescribed in 5 CFR 1320.12. On July 24, 2006 (71 FR 41800), EPA sought comments on this ICR pursuant to 5 CFR 1320.8(d). EPA received 1 comment during the comment period, which is addressed in the ICR. Any additional comments on this ICR should be submitted to EPA and OMB within 30 days of this notice.

EPA has established a public docket for this ICR under Docket ID No. EPA–HQ–ORD–2006–0270, which is available for online viewing at *www.regulations.gov,* or in person viewing at the Office of Research and Development Docket in the EPA Docket Center (EPA/DC), EPA West, Room B102, 1301 Constitution Ave., NW., Washington, DC. The EPA/DC Public Reading Room is open from 8 a.m. to 4:30 p.m., Monday through Friday, excluding legal holidays. The telephone number for the Reading Room is 202–566–1744, and the telephone number for the Office of Research and Development Docket is 202–566–1752.

Use EPA's electronic docket and comment system at *www.regulations.gov,* to submit or view public comments, access the index listing of the contents of the docket, and to access those documents in the docket that are available electronically. Once in the system, select ''docket search,'' then key in the docket ID number identified above. Please note that EPA's policy is that public comments, whether submitted electronically or in paper, will be made available for public viewing at www.regulations.gov as EPA receives them and without change, unless the comment contains copyrighted material, CBI, or other information whose public disclosure is restricted by statute. For further information about the electronic docket, go to *www.regulations.gov.*

Title: Contribution of Household Activities to the Health of Urban Ecosystems.

ICR numbers: EPA ICR No. 2223.01.

ICR Status: This ICR is for a new information collection activity. An Agency may not conduct or sponsor, and a person is not required to respond to, a collection of information, unless it displays a currently valid OMB control number. The OMB control numbers for EPA's regulations in title 40 of the CFR, after appearing in the **Federal Register** when approved, are listed in 40 CFR part 9, are displayed either by publication in the **Federal Register** or by other appropriate means, such as on the related collection instrument or form, if applicable. The display of OMB control numbers in certain EPA regulations is consolidated in 40 CFR part 9.

Abstract: As part of the EPA's Sustainability Initiative, this research focuses on maintaining healthy urban ecosystems for both people and other species. The goal is to better understand whether people recognize how household activities affect the surrounding environment, most notably the wildlife that is dependent on these systems, and whether people are likely to change their behaviors once they learn about household-environment linkages. The specific topic of interest is household rodenticide use, and resident awareness of how inexpert use of rodenticides may result in mortality of non-target species. The two study areas are (1) the southwestern quadrant of Bakersfield, and (2) portions of Thousand Oaks, Agoura Hills, Calabasas, and Westlake Village, California. The most effective way to gather detailed information about household rodenticide use is to directly ask residents within the locations of interest. A voluntary mail survey will be used, and all respondent identities and individual responses will remain confidential to the extent allowed by law. This information will provide the EPA with a better understanding about how people relate to their personal impacts on the environment, and will lead to improved communication between members of the general public, environmental regulators, and resource managers. The end result will be more effective and appropriately targeted environmental regulation.

Burden Statement: The annual public reporting and recordkeeping burden for this collection of information is estimated to average 0.33 hours per response. Burden means the total time, effort, or financial resources expended by persons to generate, maintain, retain, or disclose or provide information to or for a Federal agency. This includes the time needed to review instructions; develop, acquire, install, and utilize technology and systems for the purposes of collecting, validating, and verifying information, processing and maintaining information, and disclosing and providing information; adjust the existing ways to comply with any previously applicable instructions and requirements which have subsequently changed; train personnel to be able to respond to a collection of information; search data sources; complete and review the collection of information; and transmit or otherwise disclose the information.

Respondents/Affected Entities: Individuals or households, businesses or other for-profit.

Estimated Number of Respondents: 10,000.

Frequency of Response: One time response.

Estimated Total Annual Hour Burden: 3,300.

Estimated Total Annual Cost: $86,425, which includes $0 in capital or O&M.

Dated: October 26, 2006.

Oscar Morales,

Director, Collection Strategies Division.

[FR Doc. E6–18492 Filed 11–1–06; 8:45 am]

BILLING CODE 6560–50–P

ENVIRONMENTAL PROTECTION AGENCY

[EPA–HQ–OECA–2006–0417; FRL–8238–7]

Agency Information Collection Activities; Submission to OMB for Review and Approval; Comment Request; NSPS for Surface Coating of Plastic Parts for Business Machines (Renewal), EPA ICR Number 1093.08, OMB Control Number 2060–0162

AGENCY: Environmental Protection Agency (EPA).

ACTION: Notice.

SUMMARY: In compliance with the Paperwork Reduction Act (44 U.S.C. 3501 *et seq.*), this document announces that an Information Collection Request (ICR) has been forwarded to the Office of Management and Budget (OMB) for review and approval. This is a request to renew an existing approved collection. The ICR that is abstracted below describes the nature of the collection and the estimated burden and cost.

DATES: Additional comments may be submitted on or before December 4, 2006.

ADDRESSES: Submit your comments, referencing docket ID number EPA–HQ–OECA–2006–0417, to (1) EPA online using *http://www.regulations.gov* (our preferred method), by e-mail to *docket.oeca@epa.gov,* or by mail to: EPA Docket Center (EPA/DC), Environmental Protection Agency, Enforcement and Compliance Docket and Information Center, mail code 2201T, 1200 Pennsylvania Avenue, NW., Washington, DC 20460, and (2) OMB at: Office of Information and Regulatory Affairs, Office of Management and Budget (OMB), Attention: Desk Officer for EPA, 725 17th Street, NW., Washington, DC 20503.

Note: The EPA Docket Center suffered damage due to flooding during the last week of June 2006. The Docket Center is continuing to operate. However, during the cleanup, there will be temporary changes to Docket Center telephone numbers, addresses, and hours of operation for people who wish to visit the Public Reading Room to view documents. Consult EPA's **Federal Register** notice at 71 FR 38147 (July 5, 2006) or the EPA Web site at *http://www.epa.gov/epahome/dockets.htm* for current information on docket status, locations and telephone numbers.

FOR FURTHER INFORMATION CONTACT: John Schaefer, Office of Air Quality Planning and Standards, Sector Policies and Programs Division (D243–05), Measurement Policy Group, Environmental Protection Agency, Research Triangle Park, North Carolina 27711; telephone number: (919) 541–0296; fax number: (919) 541–3207; e-mail address: *schaefer.john@epa.gov.*

SUPPLEMENTARY INFORMATION: EPA has submitted the following ICR to OMB for review and approval according to the procedures prescribed in 5 CFR 1320.12. On June 21, 2006 (71 FR 35652), EPA sought comments on this ICR pursuant to 5 CFR 1320.8(d). EPA received no comments. Any additional comments on this ICR should be submitted to EPA and OMB within 30 days of this notice.

EPA has established a public docket for this ICR under docket ID number EPA–HQ–OECA–2006–0417, which is available for public viewing online at *http://www.regulations.gov,* in person viewing at the Enforcement and Compliance Docket and Information Center in the EPA Docket Center (EPA/DC), EPA West, Room B102, 1301 Constitution Avenue, NW., Washington, DC. The EPA Docket Center Public Reading Room is open from 8:30 a.m. to 4:30 p.m., Monday through Friday, excluding legal holidays. The telephone number for the Reading Room is (202) 566–1744 and the telephone number for the Enforcement and Compliance Docket is (202) 566–1927.

Use EPA's electronic docket and comment system at *http://www.regulations.gov* to submit or view public comments, access the index listing of the contents of the docket, and to access those documents in the docket that are available electronically. Once in the system, select ''docket search,'' then key in the docket ID number identified above. Please note that EPA's policy is that public comments, whether submitted electronically or in paper, will be made available for public viewing at *http://www.regulations.gov,* as EPA receives them and without change, unless the comment contains copyrighted material, CBI, or other information whose public disclosure is restricted by statute. For further information about the electronic docket, go to *http://www.regulations.gov.*

Title: NSPS for Surface Coating of Plastic Parts for Business Machines (Renewal).

ICR Numbers: EPA ICR Number 1093.08, OMB Control Number 2060–0162.

ICR Status: This ICR is scheduled to expire on November 30, 2006. Under OMB regulations, the Agency may continue to conduct or sponsor the collection of information while this submission is pending at OMB. An Agency may not conduct or sponsor, and a person is not required to respond to, a collection of information unless it displays a currently valid OMB control number. The OMB control numbers for EPA's regulations in title 40 of the CFR, after appearing in the **Federal Register** when approved, are listed in 40 CFR part 9, and displayed either by publication in the **Federal Register** or by other appropriate means, such as on the related collection instrument or form, if applicable. The display of OMB control numbers in certain EPA regulations is consolidated in 40 CFR part 9.

Abstract: The New Source Performance Standards (NSPS) for Surface Coating of Plastic Parts for Business Machines were promulgated on January 29, 1988. These standards apply to each spray booth that applies prime coats, color coats, texture coats or touch-up coats in industrial surface coating operations that apply coatings to plastic parts for use in the manufacture of business machines.

Affected sources are required to complete initial notifications, performance tests, and periodic reports. Owners or operators are also required to maintain records of the occurrence and duration of any startup, shutdown, or malfunction in the operation of an affected facility, or any period during which the monitoring system is inoperative. These notifications, reports, and records are essential in determining compliance; and are required, in general, of all sources subject to NSPS.

Burden Statement: The annual public reporting and recordkeeping burden for this collection of information is estimated to average 35 hours per response. Burden means the total time, effort, or financial resources expended by persons to generate, maintain, retain, or disclose or provide information to or for a Federal agency. This includes the time needed to review instructions; develop, acquire, install, and utilize technology and systems for the purposes of collecting, validating, and verifying information, processing and maintaining information, and disclosing and providing information; adjust the existing ways to comply with any previously applicable instructions and requirements which have subsequently changed; train personnel to be able to respond to a collection of information; search data sources; complete and review the collection of information; and transmit or otherwise disclose the information.

Respondents/Affected Entities: Business machine manufacturers.

Estimated Number of Respondents: 10.

Frequency of Response: Initially, quarterly, semi-annually, and monthly.

Estimated Total Annual Hour Burden: 978.

Estimated Total Annual Cost: No annualized capital or O&M costs.

Changes in the Estimates: There is no change in the total estimated burden currently identified in the OMB Inventory of Approved ICR Burdens.

Dated: October 25, 2006.

Oscar Morales,

Director, Collection Strategies Division.

[FR Doc. E6–18493 Filed 11–1–06; 8:45 am]

BILLING CODE 6560–50–P

ENVIRONMENTAL PROTECTION AGENCY

[EPA–HQ–OW–2005–0019; FRL–8238–8]

Agency Information Collection Activities: Submission for OMB Review and Approval; Comment Request; Contaminant Occurrence Data in Support of EPA's Second Six-Year Review of National Primary Drinking Water Regulations; EPA ICR Number 2231.01

AGENCY: Environmental Protection Agency (EPA).

ACTION: Notice.

SUMMARY: In compliance with the Paperwork Reduction Act (44 U.S.C. 3501 *et seq.*), this document announces that the following Information Collection Request (ICR) has been forwarded to the Office of Management and Budget (OMB) for review and approval. This is a request for a new collection. The ICR, abstracted in this action, describes the nature of the information collection and its estimated burden and cost.

DATES: Additional comments may be submitted on or before December 4, 2006.

ADDRESSES: Submit your comments, referencing Docket ID No. EPA–HQ–OW–2005–0019, to: (1) EPA online using *http://www.regulations.gov* (our preferred method); or by mail to: EPA Docket Center, Environmental Protection Agency, Water Docket (Mail Code 4101T), 1200 Pennsylvania Ave., NW., Washington, DC 20460, and (2) OMB by mail to: Office of Information and Regulatory Affairs, Office of Management and Budget (OMB), Attention: Desk Officer for EPA, 725 17th Street, NW., Washington, DC 20503.

Note: The EPA Docket Center suffered damage due to flooding during the last week of June 2006. The Docket Center is continuing to operate. However, during the cleanup, there will be temporary changes to Docket Center telephone numbers, addresses, and hours of operation for people who wish to make hand deliveries or visit the Public Reading Room to view documents. Consult EPA's **Federal Register** notice at 71 FR 38147 (July 5, 2006) or the EPA Web site at *http://www.epa.gov/epahome/dockets.htm* for current information on docket operations, locations and telephone numbers. The Docket Center's mailing address for U.S. mail and the procedure for submitting comments to *http://www.regulations.gov* are not affected by the flooding and will remain the same.

FOR FURTHER INFORMATION CONTACT: Peter Lassovszky, Office of Ground Water and Drinking Water, Standards and Risk Management Division, Mail Code 4607M, Environmental Protection Agency, 1200 Pennsylvania Ave., NW., Washington, DC 20460; telephone number: (202) 564–4882; fax number: (202) 564–3760; e-mail address: *lassovszky.peter@epa.gov.*

SUPPLEMENTARY INFORMATION: EPA has submitted the following ICR to OMB for review and approval according to the procedures prescribed in 5 CFR 1320.12. On June 5, 2006 (71 FR 32340), EPA sought comments on this ICR pursuant to 5 CFR 1320.8(d). EPA received one public comment during the comment period, which is addressed in the ICR. Any additional comments on this ICR should be submitted to EPA and OMB within 30 days of this notice.

EPA has established a public docket for this ICR under Docket ID No. EPA–HQ–OW–2005–0019, which is available for online viewing at *http://www.regulations.gov* or in person viewing at the Water Docket in the EPA Docket Center (EPA/DC); *see ''Note''* for Docket Center access, highlighted in the **ADDRESSES** section of this notice.

Use EPA's electronic docket and comment system at *http://www.regulations.gov* to submit or view public comments, access the index listing of the contents of the docket, and to access those documents in the docket that are available electronically. Once in the system, select ''docket search,'' then key in the docket ID number identified above. Please note that EPA's policy is that public comments, whether submitted electronically or in paper, will be made available for public viewing at *http://www.regulations.gov* as EPA receives them and without change, unless the comment contains copyrighted material, Confidential Business Information, or other information whose public disclosure is restricted by statute. For further information about the electronic docket, go to *http://www.regulations.gov.*

Title: Contaminant Occurrence Data in Support of EPA's Second Six-Year Review of National Primary Drinking Water Regulations.

ICR numbers: EPA ICR No. 2231.01.

ICR Status: This ICR is for a new information collection activity. An Agency may not conduct or sponsor, and a person is not required to respond to, a collection of information, unless it displays a currently valid OMB control number. The OMB control numbers for EPA's regulations in title 40 of the CFR, after appearing in the **Federal Register** when approved, are listed in 40 CFR part 9 and are displayed either by publication in the **Federal Register** or by other appropriate means, such as on the related collection instrument or form, if applicable. The display of OMB control numbers in certain EPA regulations is consolidated in 40 CFR part 9.

Abstract: The Safe Drinking Water Act (SDWA), as amended in 1996, requires that the U.S. EPA review existing national primary drinking water regulations (NPDWRs) no less often than every six years. This cyclical evaluation is referred to as the ''Six-Year Review of National Primary Drinking Water Regulations'' or, simply, the ''Six-Year Review.'' Through the Six-Year Review process, EPA reviews and assesses risks to human health posed by regulated drinking water contaminants. For the first Six-Year Review cycle (1996–2002), EPA reviewed 68 chemical NPDWRs and the Total Coliform Rule (TCR), which were promulgated prior to the 1996 Amendments. The occurrence assessments conducted for the first Six-Year Review were based on compliance monitoring data from 1993 to 1997, which were provided by States. EPA published the results of this review in the July 18, 2003, edition of the **Federal Register** (68 FR 42907).

To support future Six-Year Reviews, EPA's Office of Water is requesting that States submit, on a voluntary basis, historical compliance monitoring (contaminant occurrence) data for community water systems (CWSs) and non-transient non-community water systems (NTNCWSs). EPA is requesting contaminant occurrence data from 1998 to 2005 for all regulated chemical and radiological contaminants, as well as data from the TCR. EPA anticipates that the compliance monitoring records from this information collection (including all results for analytical detections and non-detections) will provide the data needed to conduct statistical estimates of national occurrence for each regulated contaminant. These national

occurrence estimates will be used to support EPA's review of existing regulations, and the Agency's decision on whether any revisions are needed. In addition, the 1996 SDWA section 1445(g) requires the Agency to maintain a national drinking water contaminant occurrence database (*i.e.*, the National Contaminant Occurrence Data (NCOD)) using occurrence data for both regulated and unregulated contaminants in public water systems (PWSs). This data collection will provide new occurrence data on regulated contaminants to maintain the NCOD.

Following the first public notice of this proposed data collection rule on June 5, 2006 (71 FR 32340), EPA received one public comment. The commenter expressed concerns that EPA should (1) make every effort to minimize the effort it takes States to share these data; (2) not use the data in an enforcement context; and (3) not make future collections mandatory. EPA agrees with the commenter that the Agency should aim to minimize burden on the States and plans to do so by allowing submission of data in virtually any electronic format, and providing States that use the Safe Drinking Water Information System State Version (SDWIS/State) with extraction scripts if States agree with this method of data transfer. In addition, EPA plans not to use the data for occurrence assessments for enforcement actions. Finally, EPA plans to conduct this data collection as a voluntary effort. Any possible future changes regarding the collection of drinking water contaminant occurrence data will be handled through a separate public comment process. The commenter did not suggest that EPA make changes to the data collection format or to the cost and burden estimates.

Burden Statement: The annual public reporting and recordkeeping burden for this collection of information is estimated to average 12.2 hours per State. Burden means the total time, effort, or financial resources expended by persons to generate, maintain, retain, or disclose or provide information to or for a Federal agency. This includes the time needed to review instructions; develop, acquire, install, and utilize technology and systems for the purposes of collecting, validating, and verifying information, processing and maintaining information, and disclosing and providing information; adjust the existing ways to comply with any previously applicable instructions and requirements which have subsequently changed; train personnel to be able to respond to a collection of information; search data sources; complete and review the collection of information; and transmit or otherwise disclose the information.

Respondents/Affected Entities: State drinking water primacy agencies.

Estimated Number of Respondents: 56.

Frequency of Response: One time only.

Estimated Total Annual Hour Burden: 681.

Estimated Total Annual Cost: $30,608, which includes $0 annualized capital or O&M costs.

Dated: October 26, 2006.

Oscar Morales,

Director, Collection Strategies Division.

[FR Doc. E6–18494 Filed 11–1–06; 8:45 am]

BILLING CODE 6560–50–P

ENVIRONMENTAL PROTECTION AGENCY

[EPA–HQ–OW–2002–0059; FRL–8238–4]

Agency Information Collection Activities; Submission to OMB for Review and Approval; Safe Drinking Water Act State Revolving Fund Program; EPA ICR No. 1803.05, OMB Control No. 2040–0185

AGENCY: Environmental Protection Agency (EPA).

ACTION: Notice.

SUMMARY: In compliance with the Paperwork Reduction Act (PRA) (44 U.S.C. 3501 *et seq.*), this document announces that an Information Collection Request (ICR) has been forwarded to the Office of Management and Budget (OMB) for review and approval. This is a request to renew an existing approved collection. The ICR, which is abstracted below, describes the nature of the information collection and its estimated burden and cost.

DATES: Additional comments may be submitted on or before December 4, 2006.

ADDRESSES: Submit your comments, referencing Docket ID No. EPA–HQ–OW–2002–0059, to (1) EPA online using *http://www.regulations.gov* (our preferred method), by e-mail to *OW-Docket@epa.gov* or by mail to: EPA Docket Center, Environmental Protection Agency (EPA), Water Docket, Environmental Protection Agency, Mail Code 4101T, 1200 Pennsylvania Ave., NW., Washington, DC 20460, and (2) OMB by mail to: Office of Information and Regulatory Affairs, Office of Management and Budget (OMB), Attention: Desk Officer for EPA, 725 17th Street, NW., Washington, DC 20503.

FOR FURTHER INFORMATION CONTACT: Howard Rubin, Mail Code 4606M, Environmental Protection Agency, 1200 Pennsylvania Ave., NW., Washington, DC 20460; telephone number: (202) 564–2051; e-mail address: *rubin.howarde@epa.gov.*

SUPPLEMENTARY INFORMATION: EPA has submitted the following ICR to OMB for review and approval according to the procedures prescribed in 5 CFR 1320.12. On June 5, 2006 (70 FR 32342), EPA sought comments on this ICR pursuant to 5 CFR 1320.8(d). EPA received no comments during the comment period.

EPA has established a public docket for this ICR under Docket ID No. EPA–HQ–OW–2002–0059, which is available for online viewing at *http://www.regulations.gov*, or in person viewing at the Water Docket in the EPA Docket Center (EPA/DC).

Note: The EPA Docket Center suffered damage due to flooding during the last week of June 2006. The Docket Center is continuing to operate. However, during the cleanup, there will be temporary changes to Docket Center telephone numbers, addresses, and hours of operation for people who wish to visit the Public Reading Room to view documents. Consult EPA's **Federal Register** notice at 71 FR 54815 (September 19, 2006) or the EPA Web site at *http://www.epa.gov/epahome/dockets.htm* for current information on docket status, locations and telephone numbers.

Use EPA's electronic docket and comment system at *http://www.regulations.gov*, to submit or view public comments, access the index listing of the contents of the docket, and to access those documents in the docket that are available electronically. Once in the system, select ''docket search,'' then key in the docket ID number identified above. Please note that EPA's policy is that public comments, whether submitted electronically or in paper, will be made available for public viewing at *http://www.regulations.gov* as EPA receives them and without change, unless the comment contains copyrighted material, CBI, or other information whose public disclosure is restricted by statute. For further information about the electronic docket, go to *http://www.regulations.gov.*

Title: Safe Drinking Water Act State Revolving Fund Program.

ICR numbers: EPA ICR No. 1803.05, OMB Control No. 2040–0185.

ICR Status: This ICR is scheduled to expire on November 30, 2006. Under OMB regulations, the Agency may continue to conduct or sponsor the collection of information while this submission is pending at OMB. The OMB control numbers for EPA's regulations in title 40 of the CFR, after

appearing in the **Federal Register** when approved, are listed in 40 CFR part 9, are displayed either by publication in the **Federal Register** or by other appropriate means, such as on the related collection instrument or form, if applicable. The display of OMB control numbers in certain EPA regulations is consolidated in 40 CFR part 9.

Abstract: The Safe Drinking Water Act (SDWA) Amendments of 1996 (Pub. L. 104–182) authorized the creation of the Drinking Water State Revolving Fund (DWSRF) program in each State and Puerto Rico to assist public water systems in financing the costs of infrastructure needed to achieve or maintain compliance with SDWA requirements and to protect public health. Section 1452 authorizes the Administrator of EPA to award capitalization grants to the States and Puerto Rico which, in turn, provide low-cost loans and other types of assistance to eligible drinking water systems. States can also reserve a portion of their grants to conduct various set-aside activities. The information collection activities will occur primarily at the program level through the (1) Capitalization Grant Application and Agreement/State Intended Use Plan; (2) Biennial Report; (3) Annual Audit; and (4) Assistance Application Review. Information collected is needed for input into the DWSRF National Information Management System.

(1) *Capitalization Grant Application and Agreement/State Intended Use Plan:* The State must prepare a Capitalization Grant Application that includes an Intended Use Plan (IUP), outlining in detail how it will use all the funds covered by the capitalization grant. The State may, as an alternative, develop the IUP in a two part process with one part identifying the distribution and uses of the funds among the various set-asides in the DWSRF program and the other part dealing with project assistance from the Fund.

(2) *Biennial Report:* The State must agree to complete and submit a Biennial Report on the uses of the capitalization grant. The scope of the report must cover assistance provided by the DWSRF Fund and all other set-aside activities included under the Capital Grant Agreement. States, which jointly administer DWSRF and Clean Water State Revolving Fund (CWSRF) programs, in accordance with section 1452(g)(1), may submit reports (according to the schedule specified for each program) that cover both programs.

(3) *Annual Audit:* A State must comply with the provisions of the Single Audit Act Amendments of 1996. Best management practices suggest and EPA recommends that a State conduct an annual independent audit of its DWSRF program. The scope of the report must cover the DWSRF Fund and all other set-aside activities included in the Capitalization Grant Agreement. States which jointly administer DWSRF and CWSRF programs, in accordance with section 1452(g)(1), may submit audits that cover both programs but which report financial information for each program separately.

(4) *Assistance Application Review:* Local applicants seeking financial assistance must prepare and submit DWSRF loan applications. States then review completed loan applications and verify that proposed projects will comply with applicable Federal and State requirements.

Burden Statement: The annual public reporting and recordkeeping burden for this collection of information is estimated to average 131 hours per response. Burden means the total time, effort, or financial resources expended by persons to generate, maintain, retain, or disclose or provide information to or for a Federal agency. This includes the time needed to review instructions; develop, acquire, install, and utilize technology and systems for the purposes of collecting, validating, and verifying information, processing and maintaining information, and disclosing and providing information; adjust the existing ways to comply with any previously applicable instructions and requirements which have subsequently changed; train personnel to be able to respond to a collection of information; search data sources; complete and review the collection of information; and transmit or otherwise disclose the information.

Respondents/Affected Entities: State and local governments, businesses, and non-profit institutions.

Estimated Number of Respondents: 1505 respondents per year.

Frequency of Response: Annual for State Grant Applications and Audit reports, Biennial for State Annual Reports, once per loan applications for loan applicants.

Estimated Total Annual Hour Burden: 196,870 hours.

Estimated Total Annual Cost: $6,862,452, which includes $0 capital and O&M.

Changes in the Estimates: There is an increase of 1,935 hours in the total estimated burden currently identified in the OMB Inventory of Approved ICR Burdens. This increase reflects EPA's calculation of burden for Biennial Reports.

Dated: October 26, 2006.

Oscar Morales,

Director, Collection Strategies Division.

[FR Doc. E6–18495 Filed 11–1–06; 8:45 am]

BILLING CODE 6560–50–P

ENVIRONMENTAL PROTECTION AGENCY

[EPA–HQ–OAR–2006–0407; FRL–8238–5]

Agency Information Collection Activities; Submission to OMB for Review and Approval; Comment Request; Information Collection Activities Associated With EPA's ENERGY STAR Program in the Commercial and Industrial Sectors (Renewal); EPA ICR No. 1772.04, OMB Control No. 2060–0347

AGENCY: Environmental Protection Agency (EPA).

ACTION: Notice.

SUMMARY: In compliance with the Paperwork Reduction Act (PRA) (44 U.S.C. 3501 *et seq.*), this document announces that an Information Collection Request (ICR) has been forwarded to the Office of Management and Budget (OMB) for review and approval. This is a request to renew an existing approved collection. The ICR, which is abstracted below, describes the nature of the information collection and its estimated burden and cost.

DATES: Additional comments may be submitted on or before December 4, 2006.

ADDRESSES: Submit your comments, identified by Docket ID No. EPA–HQ–OAR–2006–0407, to: (1) EPA online using *http://www.regulations.gov* (our preferred method), by e-mail to *a-and-r-Docket@epa.gov,* or by mail to: EPA Docket Center, Environmental Protection Agency, Air and Radiation Docket and Information Center, Mailcode: 6102T, 1200 Pennsylvania Ave., NW., Washington, DC 20460, and (2) OMB by mail to: Office of Information and Regulatory Affairs, Office of Management and Budget (OMB), Attention: Desk Officer for EPA, 725 17th Street, NW., Washington, DC 20503.

Note: The EPA Docket Center suffered damage due to flooding during the last week of June 2006. The Docket Center is continuing to operate. However, during the cleanup, there will be temporary changes to Docket Center telephone numbers, addresses, and hours of operation for people who wish to make hand deliveries or visit the Public Reading Room to view documents. Consult EPA's **Federal Register** notice at 71 FR 38147 (July 5, 2006) or the EPA Web site at *http://www.epa.gov/epahome/dockets.htm* for

current information on docket operations, locations and telephone numbers. The Docket Center's mailing address for U.S. mail and the procedure for submitting comments to *http://www.regulations.gov* are not affected by the flooding and will remain the same.

FOR FURTHER INFORMATION CONTACT: Mary Susan Bailey, Climate Protection Partnerships Division, Mailcode: 6202J, Environmental Protection Agency, 1200 Pennsylvania Ave., NW., Washington, DC 20460; telephone number: 202–343–9014; fax number: 202–343–2204; e-mail address: *bailey.marysusan@epa.gov*.

SUPPLEMENTARY INFORMATION: EPA has submitted the following ICR to OMB for review and approval according to the procedures prescribed in 5 CFR 1320.12. On June 1, 2006 (71 FR 31179), EPA sought comments on this ICR pursuant to 5 CFR 1320.8(d). EPA received no comments. Any additional comments on this ICR should be submitted to EPA and OMB within 30 days of this notice.

EPA has established a public docket for this ICR under Docket ID No. EPA–HQ–OAR–2006–0407, which is available for online viewing at *http://www.regulations.gov*, or in person viewing at the Air and Radiation Docket and Information Center in the EPA Docket Center (EPA/DC), EPA West, Room B102, 1301 Constitution Ave., NW., Washington, DC. The EPA/DC Public Reading Room is open from 8 a.m. to 4:30 p.m., Monday through Friday, excluding legal holidays. The telephone number for the Reading Room is 202–566–1744, and the telephone number for the Air and Radiation Docket and Information Center is 202–566–1742.

Use EPA's electronic docket and comment system at *http://www.regulations.gov*, to submit or view public comments, access the index listing of the contents of the docket, and to access those documents in the docket that are available electronically. Once in the system, select ''docket search,'' then key in the docket ID number identified above. Please note that EPA's policy is that public comments, whether submitted electronically or in paper, will be made available for public viewing at *http://www.regulations.gov* as EPA receives them and without change, unless the comment contains copyrighted material, CBI, or other information whose public disclosure is restricted by statute. For further information about the electronic docket, go to *http://www.regulations.gov*.

Title: Information Collection Activities Associated with EPA's ENERGY STAR Program in the Commercial and Industrial Sectors (Renewal).

ICR numbers: EPA ICR No. 1772.04, OMB Control No. 2060–0347.

ICR Status: This ICR is currently scheduled to expire on November 30, 2006. Under OMB regulations, the Agency may continue to conduct or sponsor the collection of information while this submission is pending at OMB. An Agency may not conduct or sponsor, and a person is not required to respond to, a collection of information, unless it displays a currently valid OMB control number. The OMB control numbers for EPA's regulations in title 40 of the CFR, after appearing in the **Federal Register** when approved, are listed in 40 CFR part 9, are displayed either by publication in the **Federal Register** or by other appropriate means, such as on the related collection instrument or form, if applicable. The display of OMB control numbers in certain EPA regulations is consolidated in 40 CFR part 9.

Abstract: ENERGY STAR is a voluntary program helping businesses and individuals protect the environment through superior energy efficiency. The Program focuses on reducing utility-generated emissions by reducing the demand for energy. In 1991, EPA launched the Green Lights program to encourage corporations, State and local governments, colleges and universities, and other organizations to adopt energy-efficient lighting as a profitable means of preventing pollution and improving lighting quality. Since then, EPA has rolled Green Lights into ENERGY STAR and expanded ENERGY STAR to encompass organization-wide energy performance improvement, such as building technology upgrades, product purchasing initiatives, and employee training. At the same time, EPA has streamlined the reporting requirements of ENERGY STAR and focused on providing incentives for improvements (*e.g.*, ENERGY STAR Awards Program). EPA also makes tools and other resources available over the Web to help the public overcome the barriers to evaluating their energy performance and investing in profitable improvements.

To join ENERGY STAR, organizations are asked to complete a Partnership Letter or Agreement that establishes their commitment to energy efficiency. Partners agree to undertake efforts such as baselining, tracking, and benchmarking their organization's energy performance by using tools such as those offered by ENERGY STAR; developing and implementing a plan to improve energy performance in their facilities and operations by following the energy management strategy provided by ENERGY STAR; and educating staff and the public about their Partnership with ENERGY STAR, and highlighting achievements with the ENERGY STAR, where available.

Partners also may be asked to periodically submit information to EPA as needed to assist in program implementation. For example, EPA maintains the Service and Product Provider Directory to provide the public with easy access to energy efficiency services and products that can help companies lower operating costs and increase their bottom line. Businesses wishing to appear in this directory are asked to submit a completed profile that details their services and products.

Partnership in ENERGY STAR is voluntary and can be terminated by Partners or EPA at any time. EPA does not expect organizations to join the program unless they expect participation to be cost-effective and otherwise beneficial for them.

In addition, Partners and any other interested party can help EPA promote energy-efficient technologies by evaluating the efficiency of their buildings using EPA's on-line tools (*e.g.*, Portfolio Manager) and applying for recognition.

If a claim of confidential business information (CBI) is asserted, EPA will manage that information in accordance with EPA's provisions on confidentiality.

Burden Statement: The annual public recordkeeping and reporting burden for joining the ENERGY STAR program and related activities is expected to vary depending on the type of Partner. The burden per Partner is expected to range from about 2 hours for a Commercial and Industrial Sector Partner to prepare/submit a Partnership Letter to 7 hours for an Energy Efficiency Program Sponsor to prepare/submit a Partnership Agreement and related information (*e.g.*, a brief plan outlining the key activities it intends to undertake to cooperatively promote ENERGY STAR in the commercial and/or industrial markets). These burden estimates include the time for reading the instructions and requirements, gathering information, and preparing/submitting the information to EPA. The burden for benchmarking in Portfolio Manager is estimated to vary depending on the type of benchmarking method. The burden per respondent for manual benchmarking is estimated to be 30 minutes to read Portfolio Manager instructions, 5 hours to gather and enter building data for a new benchmark, and 1.5 hours to perform a repeat benchmark. The burden per respondent for the import tool is estimated to be 30 minutes for reading the Portfolio Manager instructions and 1 hour for

collecting building data, downloading it into the tool, and emailing it to EPA. The burden per respondent for ENERGY STAR Exchange Services is estimated to be 20 hours for the host to set up its account and automated process, 2 hours to collect building data and set up each customer, and 15 minutes per month to submit customer information to EPA and retrieve/relay scores to customers. The burden for entering information into the ENERGY STAR Energy Performance Indicator (EPI) is estimated to range from 10 to 15 minutes per plant. This includes time for reading the EPI's instructions and entering data in order to generate a score. Finally, the burden per respondent for applying to EPA for recognition is estimated to vary depending on the type of recognition. The burden per respondent is estimated to range from 15 minutes for preparing/submitting a plant's energy efficiency score to EPA for recognition (*e.g.*, for EPA permission to display a banner or plant flag) to 26.5 hours for preparing/submitting an application to EPA for an ENERGY STAR Award.

Burden means the total time, effort, or financial resources expended by persons to generate, maintain, retain, or disclose or provide information to or for a Federal agency. This includes the time needed to review instructions; develop, acquire, install, and utilize technology and systems for the purposes of collecting, validating, and verifying information, processing and maintaining information, and disclosing and providing information; adjust the existing ways to comply with any previously applicable instructions and requirements which have subsequently changed; train personnel to be able to respond to a collection of information; search data sources; complete and review the collection of information; and transmit or otherwise disclose the information.

Respondents/Affected Entities: Organizations participating in ENERGY STAR in the Commercial and Industrial Sectors.

Approximate Number of Respondents: 6,000.

Frequency of Response: One-time, on occasion, monthly, annually, and/or periodically, depending on the type of respondent and collection.

Estimated Total Annual Hour Burden: 54,500.

Estimated Total Annual Cost: $5,436,710, including $3,574,491 in labor costs and $1,862,219 in O&M costs. There are no capital/start-up costs to respondents.

Changes in the Estimates: There is a decrease of 28,843 hours in the total estimated annual burden hours currently identified in the OMB Inventory of Approved ICR Burdens. The majority of this decrease occurred because EPA adjusted the number of respondents and the burden for some activities based on improved and updated data and analysis. The burden estimates in ICR 1772.04 reflect EPA's program experience gained over the past three years. In addition, EPA modified some of its information collections to address EPA and stakeholder needs.

Dated: October 28, 2006.

Oscar Morales,

Director, Collection Strategies Division.

[FR Doc. E6–18497 Filed 11–1–06; 8:45 am]

BILLING CODE 6560–50–P

ENVIRONMENTAL PROTECTION AGENCY

[EPA–HQ–OPPT–2003–0004;FRL–8101–6]

Access to Confidential Business Information by ASRC Management Services, Incorporated

AGENCY: Environmental Protection Agency (EPA).

ACTION: Notice.

SUMMARY: EPA has authorized ASRC Management Services, Incorporated access to information which has been submitted to EPA under all sections of the Toxic Substances Control Act (TSCA). Some of the information may be claimed or determined to be Confidential Business Information (CBI).

DATES: Access to the confidential data will occur no sooner than November 9, 2006.

FOR FURTHER INFORMATION CONTACT: *For generalinformation contact*: Colby Lintner, Regulatory Coordinator, Environmental Assistance Division (7408M), Office of Pollution Prevention and Toxics, Environmental Protection Agency, 1200 Pennsylvania Ave., NW., Washington, DC 20460; telephone number: (202) 554–1404; e-mail address: *TSCA-Hotline@.epa.gov*.

For technical information contact: Scott M. Sherlock, TSCA Security Staff, Environmental Assistance Division (7408M), Office of Pollution Prevention and Toxics, Environmental Protection Agency, 1200 Pennsylvania Ave., NW., Washington, DC 20460; telephone number: (202) 564–8257; e-mail address: *sherlock.scott@epa.gov.*

SUPPLEMENTARY INFORMATION:

I. General Information

A. Does this Notice Apply to Me?

This action is directed to the public in general. This action may, however, be of interest to those persons who are or may be required to conduct testing of chemical substances under TSCA. Since other entities may also be interested, the Agency has not attempted to describe all the specific entities that may be affected by this action. If you have any questions regarding the applicability of this action to a particular entity, consult the technical person listed under **FOR FURTHER INFORMATION CONTACT**.

B. How Can I Get Copies of this Document and Other Related Documents?

1. *Docket.* EPA has established an official public docket for this action under docket identification (ID) number EPA–HQ–OPPT–2003–0004. The official public docket consists of the documents specifically referenced in this action, any public comments received, and other information related to this action. Although a part of the official docket, the public docket does not include CBI or other information whose disclosure is restricted by statute. The official public docket is the collection of materials that is available for public viewing at the EPA Docket Center, EPA West, Infoterra Room, Room 3334,1301 Constitution Ave., NW., Washington, DC. The EPA Docket Center is open from 8:30 a.m. to 4:30 p.m., Monday through Friday, excluding legal holidays. The EPA Docket Center Reading Room telephone number is (202) 566–1744, and the telephone number for the OPPT Docket, which is located in the EPA Docket Center, is (202) 566–0280.

2. *Electronic access.* You may access this **Federal Register** document electronically through the EPA Internet under the ''**Federal Register**'' listings at*http://www.epa.gov/fedrgstr/*.

II. What Action is the Agency Taking?

Under Contract Number EP–W–05–052, ASRC of 6303 Ivy Lane, Suite 300, Greenbelt, MD, will assist EPA in managing the Non-confidential Information Center (NCIC). ASRC will provide current and historical reports on all TSCA non-CBI submissions received in compliance with TSCA; organize, distribute and prepare records for permanent storage; and handle all docket-related records for OPPT, in accordance with the TSCA Security Manual.

In accordance with 40 CFR 2.306(j), EPA has determined that under Contract Number EP–W–05–052, ASRC will require access to CBI submitted to EPA under all sections of TSCA, to perform successfully the duties specified under this contract.

ASRC personnel will be given information submitted to EPA under all sections of TSCA. Some of the information may be claimed or determined to be CBI.

EPA is issuing this notice to inform all submitters of information under all sections of TSCA that the Agency will be providing ASRC access to these CBI materials on a need-to-know basis only. All access to TSCA CBI under this arrangement will take place at EPA Headquarters.

Clearance for access to TSCA CBI under this arrangement may continue until October 18, 2010, unless the underlying contract performance period is extended.

ASRC personnel will be required to sign non-disclosure agreements and be briefed on appropriate security procedures before they are permitted access to the CBI.

List of Subjects

Environmental protection, Confidential business information.

Dated: October 26, 2006.

Brion Cook,

Director, Office of Pollution Prevention and Toxics

[FR Doc. E6–18490 Filed 11–1–06; 8:45 am]

BILLING CODE 6560–50–S

ENVIRONMENTAL PROTECTION AGENCY

[FRL–8237–7]

Northern Tug Hill Glacial Aquifer in Jefferson, Lewis, and Oswego, Counties, NY; Sole Source Aquifer; Final Determination

AGENCY: Environmental Protection Agency.

ACTION: Notice.

SUMMARY: Notice is hereby given that pursuant to Section 1424(e) of the Safe Drinking Water Act, the Administrator of the U.S. Environmental Protection Agency (EPA) has determined that the Northern Tug Hill Glacial Aquifer, underlying portions of Jefferson, Lewis, and Oswego Counties, New York, is the sole or principal source of drinking water for the Hamlet of Adams Center, Hamlet of Pierrepont Manor, Village of Adams, Village of Lacona, Village of Mannsville, and Village of Sandy Creek and that this aquifer, if contaminated would create a significant hazard to public health. As a result of this action, all Federal financially assisted projects constructed in the Northern Tug Hill Glacial Aquifer Area and its stream flow source zone (upstream portions of the drainage basin) will be subject to EPA review to ensure that these projects are designed and constructed so they do not create a significant hazard to public health.

DATES: This determination shall be effective at 1 p.m. eastern time on November 16, 2006.

ADDRESSES: The data upon which this finding are based are available to the public and may be inspected during normal business hours at the U.S. Environmental Protection Agency, Region II, Freshwater Protection Section, Community and Ecosystem Protection Branch, Floor 24, 290 Broadway, New York, New York 10007.

FOR FURTHER INFORMATION CONTACT: Lawrence E. Rinaldo, Geologist, Freshwater Protection Section, Environmental Protection Agency, Region II, 290 Broadway, Floor 24, New York, New York, 10007, (212) 637–3820.

SUPPLEMENTARY INFORMATION:

I. Background

Section 1424(e) of the Safe Drinking Water Act (42 U.S.C. 300h–3(e), Public Law 93–523 of December 16, 1974 states:

> (e) If the Administrator determines, on his own initiative or upon petition, that an area has an aquifer which is the sole or principal drinking water source for the area and which, if contaminated, would create a significant hazard to public health, he shall publish a notice of the determination in the **Federal Register**. After publication of any such notice, no commitment for Federal financial assistance (through a grant, contract, loan guarantee, or otherwise) may be entered into for any project which the Administrator determines may contaminate such aquifer through a recharge zone so as to create a significant hazard to public health, but a commitment for Federal financial assistance may, if authorized under another provision of law, be entered into to plan or design the project to assure that it will not so contaminate the aquifer.

On September 16, 2003, EPA received a petition from Peggy Manchester, Mayor, Village of Lacona, New York which petitioned EPA to designate the Northern Tug Hill Glacial Aquifer as a sole source aquifer. On July 9, 2006, EPA published a notice in the Watertown Daily News, which served to announce a public comment period and opportunity for a public hearing. The public was permitted to submit comments and information on the petition until August 9, 2006. There was not any request for a public hearing. Public comments received by EPA were considered to be in support of the designation.

II. Basis for Determination

Among the factors to be considered by the Regional Administrator in connection with the designation of an area under Section 1424(e) are: (1) Whether the Northern Tug Hill Glacial Aquifer is the area's sole or principal source of drinking water and (2) whether contamination of the aquifer would create a significant hazard to public health. On the basis of technical information available to EPA, the Regional Administrator has made the following findings, which are the basis for the determination in favor of designating the Northern Tug Hill Glacial Aquifer as a Sole Source Aquifer:

1. The Northern Tug Hill Glacial Aquifer currently serves as the ''sole source'' of drinking water for approximately 4,970 persons in the defined service area, which includes the Hamlet of Adams Center, Hamlet of Pierrepont Manor, Village of Adams, Village of Lacona, Village of Mannsville, and Village of Sandy Creek.

2. There is no existing alternative drinking water source or combination of sources which provides fifty percent or more of the drinking water to the designated area, nor is there any available cost effective future source capable of supplying the drinking water demands for the population served by the aquifer service area.

3. The Northern Tug Hill Glacial Aquifer, which consists of a crescent shaped glacial outwash and stratified drift deposits of sand and gravel along the west and southwest flanks of the Tug Hill Plateau. As a result of its highly permeable soil characteristics, the aquifer is susceptible to contamination through its recharge zone as the top of the aquifer is at land surface. The primary land use activity in the Northern Tug Hill Glacial Aquifer area is agriculture, with agricultural land being fertilized, either with commercial fertilizer or manure, and in some areas excess nitrogen from the fertilizer is carried to the aquifer. Other sources of nitrogen contamination are septic systems and barnyard runoff. Since ground water contamination can be difficult or sometimes impossible to reverse and since the communities noted above rely on the Northern Tug Hill Glacial Aquifer for drinking water purposes, contamination of the aquifer would pose a significant public health hazard.

III. Description of the Northern Tug Hill Glacial Aquifer, Sole Source Aquifer of the Jefferson, Lewis and Oswego Counties Area, Their Recharge Zone and Their Streamflow Source Zone

The Northern Tug Hill Glacial Aquifer is delineated by the crescent shaped glacial outwash and stratified drift deposits of sand and gravel along the west and southwest flanks of the Tug Hill Plateau, which covers approximately 21 miles from the Town of Adams in Jefferson County south into the Town in Richland in Oswego County, New York. The area in which Federal financially assisted projects will be subject to review is the portion of the Northern Tug Hill Glacial Aquifer in Jefferson, Lewis and Oswego Counties area, the recharge zone and the streamflow source zone.

For purposes of this designation, the Northern Tug Hill Glacial Aquifer is considered to include portions of eight towns in Jefferson County (Adams, Champion, Ellisburg, Lorraine, Rodman, Rutland, Watertown, and Worth), portions of towns in Lewis County (Denmark, Montague, and Pinckney), and portions of four towns in Oswego County (Boylston, Redfield, Richland, and Sandy Creek). The recharge zone is considered to be very permeable portions of the aquifer within Jefferson, and Oswego Counties. The streamflow source zone is that portion of the drainage basin composing the upstream headwaters area or watershed area for the losing streams that cross the Northern Tug Hill Glacial Aquifer for Jefferson, Lewis and Oswego Counties area.

IV. Information Utilized in Determination

The information utilized in this determination included the petition, various U.S. Geological Survey reports, information contained in the U.S. Environmental Protection Agency files, and written and verbal comments from public. These materials are available to the public and may be inspected during normal business house at the U.S. Environmental Protection Agency, Region II, Freshwater Protection Section, 290 Broadway, New York, New York 10007.

V. Project Review

Publication of this determination requires that EPA review proposed projects with Federal financial assistance in order to ensure that such projects do not have the potential to contaminate the Northern Tug Hill Glacial Aquifer through its aquifer and streamflow source areas as to create a significant hazard to public health. In many cases, those projects may also be analyzed in an Environmental Impact Statement (EIS) under the National Environmental Policy Act (NEPA), 42 U.S.C. 4332(2)(c). All EISs, as well as any other proposed Federal actions affecting the U.S. Environmental Protection Agency program, are required by Federal law (under the ''NEPA/309'' process) to be reviewed and commented upon by the EPA Administrator.

In order to streamline the U.S. Environmental Protection Agency reviews of the possible environmental impacts on designated sole source aquifers, when an action is to be analyzed in an EIS, the two reviews will be consolidated and both authorities cited. The EPA review under Section 1424(e) will be therefore included in the EPA review of the EIS (under NEPA).

VI. Summary

Today's action affects the Northern Tug Hill Glacial Aquifer system located in Jefferson, Lewis and Oswego Counties, New York. Projects with Federal financial assistance proposed for portions within the Northern Tug Hill Glacial Aquifer will be reviewed to ensure that their activities will not endanger public health through contamination of the aquifer. A public notice was published in the Watertown Daily News on Sunday, July 9, 2006, one comment was received which is considered in support of the designation of the Northern Tug Hill Glacial Aquifer.

Dated: October 25, 2006.

Alan J. Steinberg,

Regional Administrator, Region II.

[FR Doc. E6–18487 Filed 11–1–06; 8:45 am]

BILLING CODE 6560–50–P

FEDERAL MARITIME COMMISSION

[Docket No. 06–10]

Transport Express, Inc. and the Intermodal Carriers Conference, American Trucking Associations v. Sinotrans Container Lines, Co., Ltd. and Sinotrans Shipping Agency (NA), Inc.; Notice and Procedural Schedule

Notice is given that a Complaint, Memorandum Facts and Arguments, and a Motion for Protective Order have been filed with the Federal Maritime Commission (''Commission'') by Transport Express, Inc. and the Intermodal Motor Carriers Conference of the American Trucking Associations (''Complainants''), against Sinotrans Container Lines, Co. Ltd. and Sinotrans Shipping Agency (NA), Inc., (''Respondents''). In its Complaint and Memorandum of Facts and Arguments, Transport Express, Inc., asserts that it is a California corporation and a certified motor carrier under the laws of California. Intermodal Motor Carriers Conference asserts that it is an affiliated conference of the American Trucking Associations, Inc. (''ATA''), which is a non-profit trade organization for the trucking industry. Complainants allege that Respondent Sinotrans Container Lines is a vessel-owning ocean common carrier and is affiliated with the U.S. based Respondent, Sinotrans Shipping Agency. Complainants contend that both they and Respondents are participants in the Uniform Intermodal Interchange and Facilities Access Agreement (''UIIA'') which is administered by the Intermodal Association of North America (''IANA''). Complainants assert that Respondents terminated Complainant Transport Express' UIIA motor carrier agreement in retaliation for a dispute over whether returned equipment had been damaged by Transport Express and related invoiced charges. In addition, Complainants allege that Respondents took actions and made misrepresentations that directly interfered with Transport Express' business relations with one of its customers and another motor carrier resulting in loss of business and damage to their reputation. Complainants contend that the actions of Respondents violate 10(b)(10) and 10(d)(1) of the Shipping Act of 1984 (''The Act'') (46 U.S.C. 41104.10 and 41102(c)) by unreasonably refusing to deal and not observing just and reasonable practices.[1] Complainant prays the Commission: (a) Find that Respondents violated 10(b)(10) and 10(d)(1) of the Act; (b) direct Respondents to reinstate Complainant's interchange rights; (c) prohibit Respondents from terminating any agreement with any motor carrier in response to an assertion by that carrier of any right or defense the motor carrier may have as a party to the UIIA; (d) award Complainants $2,102.00 in damages, plus interest, plus attorneys fees, plus any other sum the Commission deems appropriate, and that any further order or orders be made as the Commission determines to be proper.

As indicated above the Complainants have also filed a Motion for Protective Order with respect to portions of

[1] Citations to provision of the Shipping Act are as recodified into subtitle IV of U.S. Code Title 46, as enacted into positive law by Public Law 109–304 (October 6, 2006). See Public Law 109–304, section 18(c).

Exhibits X and Y to Complainants' Memorandum of Fact and Arguments.[2] Respondents shall file their response to the Complainants' Motion for Protective Order no later than November 13, 2006 (See 46 CFR 502.74). Respondents shall also advise whether they consent to this Complaint being processed under the shortened procedures of Subpart K (See 46 CFR 502.181–187). Should Respondents consent to the shortened procedure, Respondents' Answering Memorandum shall be served no later than twenty-five (25) days after the Administrative Law Judge issues his ruling on Complainants' Motion for Protective Order (See 46 CFR 502.183). Should Respondents not consent to the shortened procedure, Respondent shall file an answer to the Complaint pursuant to the Commission's Rules of Practice and Procedure, within twenty (20) days of the Administrative Law Judge's ruling on the Complainants' Motion for Protective Order (See 46 CFR 502.64).

This proceeding has been assigned to the Office of the Administrative Law Judges. Complainants have requested that their complaint be handled Pursuant to Subpart K—Shortened Procedure of the Commission's Rules (46 CFR 502.181–187). With the consent of the parties and with the approval of the presiding officer, this proceeding may be conducted under the shortened procedure without oral hearing, except that a hearing may be ordered by the presiding officer at the request of either party to the proceeding or at the presiding officer's discretion. If Respondents do not consent to this shortened procedure, the matter will be governed by Subpart E of the Commission's Rules. Pursuant to the further terms of 46 CFR 502.61, the initial decision of the presiding officer in this proceeding shall be issued by March 27, 2007, and the final decision of the Commission shall be issued by June 22, 2007.[3]

Bryant L. VanBrakle,

Secretary.

[FR Doc. E6–18455 Filed 11–1–06; 8:45 am]

BILLING CODE 6730–01–P

[2] As required by the Commission's Rules, Complainants also filed a ''Public'' redacted version of the Memorandum of Facts and Arguments which is being provided to the Respondents. The Confidential version may be made available pursuant to the Administrative Law Judges ruling on the Motion for Protective Order.

[3] Should this proceeding not be conducted pursuant to Subpart K, these dates will be adjusted.

DEPARTMENT OF HEALTH AND HUMAN SERVICES

National Committee on Vital and Health Statistics: Meeting

Pursuant to the Federal Advisory Committee Act, the Department of Health and Human Services (HHS) announces the following advisory committee meeting.

Name: National Committee on Vital and Health Statistics (NCVHS).

Time and Date: November 28, 2006, 9 a.m.–3:15 p.m. November 92, 2006, 9 a.m.–12 p.m.

Place: Hubert H. Humphrey Building, 200 Independence Avenue SW., Room 505A, Washington, DC 20201.

Status: Open.

Purpose: At this meeting the Committee will hear presentations and hold discussions on several health data policy topics. On the morning of the first day the Committee will hear updates and status reports from the Department on various topics including activities of the HHS Data Council, and updates on HIPAA implementation, clinical data standards, the E-Prescribing Final Rule, and Privacy Rule compliance. They will also work on letters to the HHS Secretary on the National Provider Identifier (NPI), and applications of the Consolidated Health Informatics Initiative (CHI) for disability information. In the afternoon the Committee will discuss the 8th report to Congress on HIPAA implementation and hear updates from Subcommittees. A briefing on secondary uses of health data by an industry group has also been scheduled.

On the morning of the second day the Committee will continue working on the NPI and CHI letters. They will also be briefed on the status of the Health Information Security Privacy Collaboration, a project designed to asses how organizational business policies, practices, and State laws regarding privacy and security affect health information exchanging on a national level. There will be an update from the National Center for Health Statistic's Board of Scientific Counselors and a discussion on International Classifications and related activities. Subcommittees will then have the opportunity to provide additional updates on their work and a short discussion of future agendas and the meeting will adjourn.

The times shown above are for the full Committee meeting. Subcommittee breakout sessions are scheduled for late in the afternoon of the first day and in the morning prior to the full Committee meeting on the second day. Agendas for these breakout sessions will be posted on the NCVHS Web site (URL below) when available.

Contact Person for More Information: Substantive program information as well as summaries of meetings and a roster of committee members may be obtained from Marjorie S. Greenberg, Executive Secretary, NCVHS, National Center for Health Statistics, Centers for Disease Control and Prevention, 3311 Toledo Road, Room 2402, Hyattsville, Maryland 20782, telephone (301) 458–4245. Information also is available on the NCVHS home page of the HHS Web site: *http://www.ncvhs.hhs.gov/,* where further information including an agenda will be posted when available.

Should you require reasonable accommodation, please contact the CDC Office of Equal Employment Opportunity on (301) 458–4EE0 (4336) as soon as possible.

Dated: October 25, 2006.

James Scanlon,

Deputy Assistant Secretary for Planning and Evaluation (OSDP), Office of the Assistant Secretary for Planning and Evaluation.

[FR Doc. 06–9019 Filed 11–1–06; 8:45 am]

BILLING CODE 4151–05–M

DEPARTMENT OF HEALTH AND HUMAN SERVICES

Agency for Healthcare Research and Quality

Meeting of the National Advisory Council for Healthcare Research and Quality

AGENCY: Agency for Healthcare Research and Quality (AHRQ), HHS.

ACTION: Notice of public meeting.

SUMMARY: In accordance with section 10(a) of the Federal Advisory Committee Act, this notice announces a meeting of the National Advisory Council for Healthcare Research and Quality.

DATES: The meeting will be held on Thursday November 2, from 4 p.m. to 6 p.m., and from Friday, November 3, from 9 a.m. to 2 p.m., and is open to the public. The Notice will not be published 15 days prior to the meeting because it was regrettably delayed due to administrative difficulties.

ADDRESSES: The meeting will be held at the Courtyard by Marriott, Gaithersburg Washingtonian Center, 204 Boardwalk Place, Gaithersburg, Maryland.

FOR FURTHER INFORMATION CONTACT: Deborah Queenan, Coordinator of the Advisory Council, at the Agency for Healthcare Research and Quality, 540 Gaither Road, Rockville, Maryland, 20850, (301) 427–1330. For press-related

information, please contact Karen Migdail at (301) 427–1855.

If sign language interpretation or other reasonable accommodation for a disability is needed, please contact Mr. Donald L. Inniss, Director, Office of Equal Employment Opportunity Program, Program Support Center, on (301) 443–1144 no later than October 30, 2006. The agenda, roster, and minutes are available from Ms. Bonnie Campbell, Committee Management Officer, Agency for Healthcare Quality and Research, 540 Gaither Road, Rockville, Maryland 20850. Her phone number is (301) 427–1554.

SUPPLEMENTARY INFORMATION:

1. Purpose

Section 921 of the Public Health Service Act (42 U.S.C. 299c) established the National Advisory Council for Healthcare Research and Quality. In accordance with its statutory mandate, the Council is to advise the Secretary of the Department of Health and Human Services and the Director, Agency for Healthcare Research and Quality (AHRQ), on matters related to actions of the Agency to enhance the quality, improve the outcomes, reduce the costs of health care services, improve access to such services through scientific research, and to promote improvements in clinical practice and in the organization, financing, and delivery of health care services.

The Council is composed of members of the public appointed by the Secretary and Federal ex-officio members.

II Agenda

On Thursday, November 2, the Council meeting will begin at 4 p.m., with the call to order by the Council Chair and approval of previous Council minutes. The Director, AHRQ, will present her update on AHRQ's current research, programs, and initiatives. Following the update, the Council will discuss the topic *Visioning the Future*. The discussion of *Visioning the Future* will continue Friday morning, November 3. The official agenda will be available on AHRQ's Web site at *http://www.ahrq.gov* no later than November 1, 2006.

Dated: October 30, 2006.

Carolyn M. Clancy,

Director.

[FR Doc. 06–9039 Filed 10–31–06; 10:10 am]

BILLING CODE 4160–90–M

DEPARTMENT OF HEALTH AND HUMAN SERVICES

Centers for Medicare & Medicaid Services

Privacy Act of 1974; Report of a New System of Records

AGENCY: Department of Health and Human Services (HHS), Center for Medicare & Medicaid Services (CMS).

ACTION: Notice of a new system of records (SOR).

SUMMARY: In accordance with the requirements of the Privacy Act of 1974, we are proposing to establish a new system titled, ''Evaluation of Drug Usage Under the Staff Time and Resource Intensity Verification Study (STRIVE), System No. 09–70–0595.'' Section 1888(e)(G) of the Social Security Act (the Act) authorizes the Secretary of HHS to provide for payment adjustments to the skilled nursing facility (SNF) prospective payment system (PPS) through a resident classification system established by the Secretary that accounts for the relative resource utilization of different patient types. The case mix adjustment shall be based on resident assessment data and other data the Secretary considers appropriate. To accomplish this task, CMS is currently undertaking a national nursing home time study known as STRIVE, of which this data will be a part.

The purpose of this system is to collect and maintain during the STRIVE time study individually identifiable information on selected beneficiaries' medication utilization while in a nursing home, skilled nursing facility or swing bed hospital. Information retrieved from this system may be disclosed to: (1) Support regulatory, reimbursement, and policy functions performed within the agency or by a contractor, grantee, or consultant. We have provided background information about the new system in the **SUPPLEMENTARY INFORMATION** section below. Although the Privacy Act requires only that CMS provide an opportunity for interested persons to comment on the proposed routine uses, CMS invites comments on all portions of this notice. See *Effective Date* section for comment period.

DATES: *Effective Date:* CMS filed a new SOR report with the Chair of the House Committee on Government Reform and Oversight, the Chair of the Senate Committee on Homeland Security & Governmental Affairs, and the Administrator, Office of Information and Regulatory Affairs, Office of Management and Budget (OMB) on October 27, 2006. To ensure that all parties have adequate time in which to comment, the new system will become effective 30 days from the publication of the notice, or 40 days from the date it was submitted to OMB and the Congress, whichever is later. We may defer implementation of this system or one or more of the routine use statements listed below if we receive comments that persuade us to defer implementation.

ADDRESSES: The public should address comment to the CMS Privacy Officer, Division of Privacy Compliance, Enterprise Architecture and Strategy Group, Office of Information Services, Mail-stop N2–04–27, 7500 Security Boulevard, Baltimore, Maryland 21244–1850. Comments received will be available for review at this location by appointment during regular business hours, Monday through Friday from 9 a.m.–3 p.m., eastern time.

FOR FURTHER INFORMATION CONTACT: Julie Stankivic, Division of Institutional Post Acute Care, Chronic Care Policy Group, Center for Medicare Management, Mail Stop C5–06–27, Centers for Medicare & Medicaid Services, 7500 Security Boulevard, Baltimore, MD 21244–1849. She can be reached by telephone at 410–786–5725, or via e-mail at *Julie.Stankivic@cms.hhs.gov.*

SUPPLEMENTARY INFORMATION: Section 4008(k) of the Omnibus Reconciliation Act of 1990 (Public Law (Pub. L.) 101–508) required the Secretary to develop a proposal either to modify the then-current system under which SNFs received payment for extended care services under Part A of the Medicare program or to replace such a system with a system under which such payment would be made on the basis of a prospectively determined rate. In developing a proposal for the new system, the Secretary was required to ''provide for adjustments to prospectively determined rates to account for changes in a facility's case mix, volume of cases, and the development of new technologies and standards for medical practice.'' Section 4432 of the Balanced Budget Act of 1997 (Pub. L. 105–33) mandated a PPS for all SNFs for cost reporting periods beginning on or after July 1, 1998.

Resident drug data may enable CMS to recalibrate the weights associated with the provision of non-therapy ancillary services to residents in SNFs and swing bed hospitals subject to the SNF PPS. In order to adjust the rates to account for changes in a facility's case mix, volume of cases and development of new technologies and standards of

medical practice, CMS must recalibrate the weights associated with the amount of time that nursing home staff spend caring for residents, as well as other elements of resident care. To do this, CMS has contracted with the Iowa Foundation for Medicare Care to conduct a study of staff time commonly referred to as STRIVE. This is the first national nursing home time study undertaken in the U.S. since 1997. As part of this process, CMS believes that collecting data on medication utilization in nursing homes is critical to analyzing the impact of the provision of non-therapy ancillary services to residents in SNFs and swing bed hospitals subject to the PPS.

I. Description of the Proposed System of Records

A. Statutory and Regulatory Basis for SOR

The statutory authority for this system is given under Section 1888(e)(G) of the Social Security Act.

B. Collection and Maintenance of Data in the System

This system will collect and maintain individually identifiable and other data collected by CMS and its contractors on Medicare participants and providers of service who are participating in STRIVE, in order to analyze relevant data to create adjustments based upon a resident classification system established by the Secretary that accounts for the relative resource utilization of different patient types. The collected information will include, but is not limited to: Facility name, Federal provider identification number, facility national provider identifier, beneficiary name, social security number, health insurance claim number, gender, date of birth, NDC Code, drug name, drug strength, dosage form (drops (gtts), gram (gm), *etc.*), quantity dispensed or returned, date drug dispensed or returned, dose and frequency, routine or PRN, compound code, and cost data if available.

II. Agency Policies, Procedures, and Restrictions on the Routine Use

A. The Privacy Act permits us to disclose information without an individual's consent if the information is to be used for a purpose that is compatible with the purpose(s) for which the information was collected. Any such disclosure of data is known as a ''routine use.'' The Government will only release STRIVE information that can be associated with an individual as provided for under ''Section III. Proposed Routine Use Disclosures of Data in the System.'' Both identifiable and non-identifiable data may be disclosed under a routine use. We will only collect the minimum personal data necessary to achieve the purpose of STRIVE.

CMS has the following policies and procedures concerning disclosures of information that will be maintained in the system. Disclosure of information from the system will be approved only to the extent necessary to accomplish the purpose of the disclosure and only after CMS:

1. Determines that the use or disclosure is consistent with the reason that the data is being collected; *e.g.*, to collect and maintain individually identifiable information on selected beneficiaries' medication utilization while in a nursing home, skilled nursing facility, or swing bed hospital.

2. Determines that:

a. The purpose for which the disclosure is to be made can only be accomplished if the record is provided in individually identifiable form;

b. The purpose for which the disclosure is to be made is of sufficient importance to warrant the effect and/or risk on the privacy of the individual that additional exposure of the record might bring; and

c. There is a strong probability that the proposed use of the data would in fact accomplish the stated purpose(s).

3. Requires the information recipient to:

a. Establish administrative, technical, and physical safeguards to prevent unauthorized use of disclosure of the record;

b. Remove or destroy, at the earliest time, all patient-identifiable information; and

c. Agree to not use or disclose the information for any purpose other than the stated purpose under which the information was disclosed.

4. Determines that the data are valid and reliable.

III. Proposed Routine Use Disclosures of Data in the System

A. The Privacy Act allows us to disclose information without an individual's consent if the information is to be used for a purpose that is compatible with the purpose(s) for which the information was collected. Any such compatible use of data is known as a ''routine use.'' The proposed routine uses in this system meet the compatibility requirement of the Privacy Act. We are proposing to establish the following routine use disclosures of information maintained in the system:

5. To agency contractors, consultants or grantees, who have been engaged by the agency to assist in the performance of a service related to this collection and who need to have access to the records in order to perform the activity.

We contemplate disclosing information under this routine use only in situations in which CMS may enter into a contractual or similar agreement with a third party to assist in accomplishing CMS function relating to purposes for this system.

CMS believes that the disclosure of medication utilization data may enable CMS to better account for the relative resource utilization of different patient types for the purpose of updating SNF PPS.

CMS occasionally contracts out certain of its functions when doing so would contribute to effective and efficient operations. CMS must be able to give a contractor, consultant or grantee whatever information is necessary for the contractor or consultant to fulfill its duties. In these situations, safeguards are provided in the contract prohibiting the contractor, consultant or grantee from using or disclosing the information for any purpose other than that described in the contract and requires the contractor, consultant or grantee to return or destroy all information at the completion of the contract.

B. Additional Provisions Affecting Routine Use Disclosures

To the extent this system contains Protected Health Information (PHI) as defined by HHS regulation ''Standards for Privacy of Individually Identifiable Health Information'' (45 CFR parts 160 and 164, subparts A and E) 65 FR 82462 (12–28–00), disclosures of such PHI that are otherwise authorized by these routine uses may only be made if, and as, permitted or required by the ''Standards for Privacy of Individually Identifiable Health Information.'' (*See* 45 CFR 164.512(a) (1)).

In addition, our policy will be to prohibit release even of data not directly identifiable, except pursuant to one of the routine uses or if required by law, if we determine there is a possibility that an individual can be identified through implicit deduction based on small cell sizes (instances where the patient population is so small that an individual could, because of the small size, use this information to deduce the identity of the beneficiary).

IV. Safeguards

CMS has safeguards in place for authorized users and monitors such users to ensure against excessive or unauthorized use. Personnel having access to the system have been trained

in the Privacy Act and information security requirements. Employees who maintain records in this system are instructed not to release data until the intended recipient agrees to implement appropriate management, operational and technical safeguards sufficient to protect the confidentiality, integrity and availability of the information and information systems and to prevent unauthorized access.

This system will conform to all applicable Federal laws and regulations and Federal, HHS, and CMS policies and standards as they relate to information security and data privacy. These laws and regulations may apply but are not limited to: the Privacy Act of 1974; the Federal Information Security Management Act of 2002; the Computer Fraud and Abuse Act of 1986; the Health Insurance Portability and Accountability Act of 1996; the E-Government Act of 2002, the Clinger-Cohen Act of 1996; the Medicare Modernization Act of 2003, and the corresponding implementing regulations. OMB Circular A–130, Management of Federal Resources, Appendix III, Security of Federal Automated Information Resources also applies. Federal, HHS, and CMS policies and standards include but are not limited to: All pertinent National Institute of Standards and Technology publications; the HHS Information Systems Program Handbook and the CMS Information Security Handbook.

V. Effects of the Proposed System of Records on Individual Rights

CMS proposes to establish this system in accordance with the principles and requirements of the Privacy Act and will collect, use, and disseminate information only as prescribed therein. Data in this system will be subject to the authorized releases in accordance with the routine uses identified in this system of records.

CMS will take precautionary measures to minimize the risks of unauthorized access to the records and the potential harm to individual privacy or other personal or property rights of patients whose data are maintained in this system. CMS will collect only that information necessary to perform the system's functions. In addition, CMS will make disclosure from the proposed system only with consent of the subject individual, or his/her legal representative, or in accordance with an applicable exception provision of the Privacy Act. CMS, therefore, does not anticipate an unfavorable effect on individual privacy as a result of information relating to individuals.

Dated: October 24, 2006.

John R. Dyer,

Chief Operating Officer, Centers for Medicare & Medicaid Services.

SYSTEM NO. 09–70–0595

SYSTEM NAME:

''Evaluation of Drug Usage Under the Staff Time and Resource Intensity Verification Study (STRIVE),'' HHS/CMS/CMM.

SECURITY CLASSIFICATION:

Level Three Privacy Act Sensitive Data.

SYSTEM LOCATION:

Centers for Medicare & Medicaid Services (CMS) Data Center, 7500 Security Boulevard, North Building, First Floor, Baltimore, Maryland 21244–1850 and at various co-locations of CMS agents.

CATEGORIES OF INDIVIDUALS COVERED BY THE SYSTEM:

This system will collect and maintain individually identifiable and other data collected by CMS and its contractors on Medicare participants and providers of service who are participating in STRIVE, in order to analyze relevant data to create adjustments based upon a resident classification system established by the Secretary that accounts for the relative resource utilization of different patient types.

CATEGORIES OF RECORDS IN THE SYSTEM:

The collected information will include, but is not limited to: Facility name, Federal provider identification number, facility national provider identifier, beneficiary name, social security number, health insurance claim number, gender, date of birth, NDC Code, drug name, drug strength, dosage form (drops (gtts), gram (gm), *etc.*), quantity dispensed or returned, date drug dispensed or returned, dose and frequency, routine or PRN, compound code, and cost data if available.

AUTHORITY FOR MAINTENANCE OF THE SYSTEM:

The statutory authority for this system is given under Section 1888(e)(G) of the Social Security Act.

PURPOSE(S) OF THE SYSTEM:

The purpose of this system is to collect and maintain during the STRIVE time study individually identifiable information on selected beneficiaries' medication utilization while in a nursing home, skilled nursing facility or swing bed hospital. Information retrieved from this system may be disclosed to: (1) support regulatory, reimbursement, and policy functions performed within the agency or by a contractor, grantee, or consultant.

ROUTINE USES OF RECORDS MAINTAINED IN THE SYSTEM, INCLUDING CATEGORIES OR USERS AND THE PURPOSES OF SUCH USES:

A. The Privacy Act allows us to disclose information without an individual's consent if the information is to be used for a purpose that is compatible with the purpose(s) for which the information was collected. Any such compatible use of data is known as a ''routine use.'' The proposed routine uses in this system meet the compatibility requirement of the Privacy Act. We are proposing to establish the following routine use disclosures of information maintained in the system:

1. To agency contractors, consultants or grantees, who have been engaged by the agency to assist in the performance of a service related to this collection and who need to have access to the records in order to perform the activity.

B. Additional Provisions Affecting Routine Use Disclosures

To the extent this system contains Protected Health Information (PHI) as defined by HHS regulation ''Standards for Privacy of Individually Identifiable Health Information'' (45 CFR parts 160 and 164, subparts A and E) 65 FR 82462 (12–28–00), disclosures of such PHI that are otherwise authorized by these routine uses may only be made if, and as, permitted or required by the ''Standards for Privacy of Individually Identifiable Health Information.'' (*See* 45 CFR 164.512(a) (1)).

In addition, our policy will be to prohibit release even of data not directly identifiable, except pursuant to one of the routine uses or if required by law, if we determine there is a possibility that an individual can be identified through implicit deduction based on small cell sizes (instances where the patient population is so small that an individual could, because of the small size, use this information to deduce the identity of the beneficiary).

POLICIES AND PRACTICES FOR STORING, RETRIEVING, ACCESSING, RETAINING, AND DISPOSING OF RECORDS IN THE SYSTEM:

STORAGE:

All records will be stored electronically and on hard copy.

RETRIEVABILITY:

The collected data are retrieved by an individual identifier; *e.g.*, beneficiary name or HICN.

SAFEGUARDS:

CMS has safeguards in place for authorized users and monitors such users to ensure against excessive or

unauthorized use. Personnel having access to the system have been trained in the Privacy Act and information security requirements. Employees who maintain records in this system are instructed not to release data until the intended recipient agrees to implement appropriate management, operational and technical safeguards sufficient to protect the confidentiality, integrity and availability of the information and information systems and to prevent unauthorized access.

This system will conform to all applicable Federal laws and regulations and Federal, HHS, and CMS policies and standards as they relate to information security and data privacy. These laws and regulations may apply but are not limited to: The Privacy Act of 1974; the Federal Information Security Management Act of 2002; the Computer Fraud and Abuse Act of 1986; the Health Insurance Portability and Accountability Act of 1996; the E-Government Act of 2002, the Clinger-Cohen Act of 1996; the Medicare Modernization Act of 2003, and the corresponding implementing regulations. OMB Circular A–130, Management of Federal Resources, Appendix III, Security of Federal Automated Information Resources also applies. Federal, HHS, and CMS policies and standards include but are not limited to: All pertinent National Institute of Standards and Technology publications; the HHS Information Systems Program Handbook and the CMS Information Security Handbook.

RETENTION AND DISPOSAL:

CMS will retain information for a total period not to exceed 5 years after the final report is released. All claims-related records are encompassed by the document preservation order and will be retained until notification is received from DOJ.

SYSTEM MANAGER AND ADDRESS:

Director Division of Institutional Post Acute Care, Chronic Care Policy Group, Center for Medicare Management, Mail Stop C5–06–27, Centers for Medicare & Medicaid Services, 7500 Security Boulevard, Baltimore, MD 21244–1849.

NOTIFICATION PROCEDURE:

For purpose of access, the subject individual should write to the system manager who will require the system name, employee identification number, tax identification number, national provider number, and for verification purposes, the subject individual's name (woman's maiden name, if applicable), HICN, and/or SSN (furnishing the SSN is voluntary, but it may make searching for a record easier and prevent delay).

RECORD ACCESS PROCEDURE:

For purpose of access, use the same procedures outlined in Notification Procedures above. Requestors should also reasonably specify the record contents being sought. (These procedures are in accordance with Department regulation 45 CFR 5b.5 (a)(2)).

CONTESTING RECORD PROCEDURES:

The subject individual should contact the system manager named above, and reasonably identify the record and specify the information to be contested. State the corrective action sought and the reasons for the correction with supporting justification. (These procedures are in accordance with Department regulation 45 CFR 5b.7).

RECORDS SOURCE CATEGORIES:

Data will be collected from OmniCare, pharmacies, nursing homes, and Long Term Care Minimum Data Set, System No. 09–70–1517.

SYSTEMS EXEMPTED FROM CERTAIN PROVISIONS OF THE ACT:

None.

[FR Doc. E6–18452 Filed 11–1–06; 8:45 am]

BILLING CODE 4120–03–P

DEPARTMENT OF HEALTH AND HUMAN SERVICES

Centers for Medicare & Medicaid Services

Privacy Act of 1974; Report of New System of Records

AGENCY: Department of Health and Human Services (HHS), Centers for Medicare & Medicaid Services (CMS).

ACTION: Notice of a new system of records.

SUMMARY: In accordance with the requirements of the Privacy Act of 1974, CMS is proposing to establish a new system of records (SOR) titled ''One Program Integrity Data Repository (ODR),'' System No. 09–70–0568. Section 1893 of the Social Security Act (the Act) established the ''Medicare Integrity Program'' that requires CMS to contract with eligible entities to ''review activities of providers of services or other individuals and entities furnishing items and services for which payment may be made under this title'' by utilizing equipment and software technologies. Likewise, section 1893 of the Act requires CMS to establish the Medicare Medicaid Data Match Program (Medi-Medi) in which data from both the Medicare and Medicaid programs are analyzed together to better detect fraud, waste, and abuse existent in these programs. In order to comply with these requirements and enhance our ability to detect fraud, waste, and abuse in Medicare and Medicaid, CMS is proposing to construct the ODR.

CMS maintains numerous systems housing Medicare beneficiary Parts A, B, C, and D entitlement, enrollment, and utilization information. Additionally, CMS maintains data on physicians, providers, employer plans, Medicaid recipients and Medicare secondary payers. There are a large number of data sources, extraction tools, and access mechanisms. Users of the data often experience inconsistent, untimely, or duplicated information. The ODR will be an enterprise resource that will provide an integrated view of the data to all of CMS and its partners providing a single authoritative source of information and providing quality and timely data.

The ODR will provide an organized structure for reaching the data through a consistent application of access policies, processes and procedures, common services, governance, and framework. The ODR will integrate and load data from various CMS systems consisting of Medicare Parts A, B, C, and D, Medicaid and Retiree Drug Subsidy entitlement, enrollment and utilization data. The ODR will also contain demographic information on Medicaid beneficiaries, Medicare providers and physicians, and employer plans that are receiving a subsidy from CMS for providing creditable drug coverage to their retirees. It is through the integration of this Medicare data with other data; *e.g.*, historic data, Part A and Part B data, and Medicaid data sets provided by state agencies that CMS fraud, waste, and abuse, quality improvement, research, and other analytic activities are maximized.

The data collected and maintained in this system are retrieved from the following databases: Medicare Drug Data Processing System, System No. 09–70–0553 (70 FR 58436 (October 6, 2005)); Medicare Beneficiary Database, System No. 09–70–0536 (66 FR 63392 (December 6, 2001)); Medicare Advantage Prescription Drug System, System No. 09–70–4001 (70 FR 60530 (October 18, 2005)); Medicaid Statistical Information System, System No. 09–70–6001 (67 FR 48906 (July 26, 2002)); Retiree Drug Subsidy Program, System No. 09–70–0550 (70 FR 41035 (July 15, 2005)); Common Working File, System No. 09–70–0526 (67 FR 3210 (January 23, 2002)); National Claims History,

System No. 09–70–0005 (67 FR 57015 (September 6, 2002)); Enrollment Database, System No. 09–70–0502 (67 FR 3203 (January 23, 2002)); Carrier Medicare Claims Record, System No. 09–70–0501 (67 FR 54428 (August 22, 2002)); Intermediary Medicare Claims Record, System No. 09–70–0503 (67 FR 65982 (October 29, 2002)); Unique Physician/Provider Identification Number, System No. 09–70–0525, (69 FR 75316 (December 16, 2004)); Medicare Supplier Identification File, System No. 09–70–0530 (67 FR 48184 (July 23, 2002)); and the Medicaid data sets provided by participating state agencies.

The primary purpose of this system is to establish an enterprise resource that will provide a single source of information for all CMS fraud, waste, and abuse activities. Information retrieved from this system of records will also be disclosed to: (1) Support regulatory, reimbursement, and policy functions performed within the agency or by a contractor, consultant or grantee; (2) assist another Federal or State agency, agency of a state government, an agency established by state law, or its fiscal agent; (3) support Quality Improvement Organizations (QIO); (4) assist other insurers for processing individual insurance claims; (5) facilitate research on the quality and effectiveness of care provided, as well as payment related projects; (6) support litigation involving the agency; and (7) combat fraud, waste, and abuse in certain health benefits programs. We have provided background information about the new system in the **SUPPLEMENTARY INFORMATION** section below. Although the Privacy Act requires only that CMS provide an opportunity for interested persons to comment on the routine uses, CMS invites comments on all portions of this notice. *See Effective Date* section for comment period.

DATES: *Effective Date:* CMS filed a new SOR report with the Chair of the House Committee on Government Reform and Oversight, the Chair of the Senate Committee on Homeland Security & Governmental Affairs, and the Administrator, Office of Information and Regulatory Affairs, Office of Management and Budget (OMB) on October 27, 2006. To ensure that all parties have adequate time in which to comment, the new system will become effective 30 days from the publication of the notice, or 40 days from the date it was submitted to OMB and the congress, whichever is later. We may defer implementation of this system or one or more of the routine use statements listed below if we receive comments that persuade us to defer implementation.

ADDRESSES: The public should address comments to the CMS Privacy Officer, Division of Privacy Compliance, Enterprise Architecture and Strategy Group, Office of Information Services, Mail Stop N2–04–27, 7500 Security Boulevard, Baltimore, Maryland 21244–1850. Comments received will be available for review at this location, by appointment, during regular business hours, Monday through Friday from 9 a.m.—3 p.m., eastern daylight time.

FOR FURTHER INFORMATION CONTACT: Christa Robertson, Division of Analysis and Evaluation, Program Integrity Group, Office of Financial Management, CMS, Room N3–07–04, 7500 Security Boulevard, Baltimore, Maryland 21244–1850. She can be reached by telephone at 410–786–6965 or via e-mail at *Christa.Robertson@cms.hhs.gov.*

SUPPLEMENTARY INFORMATION: The ODR will work in conjunction with the Integrated Data Repository system of records to support the One Program Integrity (PI) Group. While the IDR will initially focus on fee-for-service and some prescription drug data, the ODR will initially focus on supplementary data to support the new Medicare Prescription Drug program along with Medicaid data to support the Medi-Medi contractors. CMS has contracted with Medicare Drug Integrity Contractors (MEDICs). The MEDICs are required to perform a myriad of functions including: fraud, waste, and abuse detection; coordination with law enforcement; data analysis to identify fraud, waste, and abuse; fraud, waste, and abuse audits; other audits as required; anti-fraud Part D education and outreach; and the development of a Part D error rate. Due to the complexity of Part D data, to perform the above-mentioned functions, it is imperative that MEDICs have access to a wide variety of CMS data, including Parts A, B, C, D and Medicaid data.

The Office of Financial Management, Program Integrity Group serves as the point of contact for program integrity issues related to Medicare benefits. Major Program Integrity Group program initiatives include the Program Safeguard Contractor Program, Medical Review, Provider and Supplier Enrollment, MMA Integrity, and cross cutting issues between Medicare and Medicaid including the 'Medi-Medi' program. As part of its program integrity work, the Program Integrity Group works closely with law enforcement (*e.g.*, Federal Bureau of Investigation, Department of Justice, Office of Inspector General). For example, the Program Integrity Group, and its contractors, refer potential fraud cases and fulfill law enforcement's requests for data. All of these functions can be better served through a comprehensive set of common data structures and modern tools that encourage collaboration and innovation.

I. Description of the Proposed System of Records

A. Statutory and Regulatory Basis for System

Authority for maintenance of this system is given under section 1893 of the Social Security Act.

B. Collection and Maintenance of Data in the System

This system will maintain information on Medicare beneficiaries Parts A, B, C, and D and physicians, providers, employer plans, Medicaid recipients and Medicare secondary payers.

Information maintained in the system include, but are not limited to: standard data for identification such as health insurance claim number, social security number, gender, race/ethnicity, date of birth, geographic location, Medicare enrollment, entitlement, and utilization information, Medicaid enrollment, entitlement, and utilization information, MSP data necessary for appropriate Medicare claim payment, hospice election, MA plan elections and enrollment, End Stage Renal Disease (ESRD) entitlement, historic and current listing of residences, and Medicare eligibility and Managed Care institutional status.

II. Agency Policies, Procedures, and Restrictions on the Routine Use

A. The Privacy Act permits us to disclose information without an individual's consent if the information is to be used for a purpose that is compatible with the purpose(s) for which the information was collected. Any such disclosure of data is known as a ''routine use.'' The government will only release ODR information that can be associated with an individual as provided for under ''Section III. Proposed Routine Use Disclosures of Data in the System.'' Both identifiable and non-identifiable data may be disclosed under a routine use.

We will only disclose the minimum personal data necessary to achieve the purpose of ODR. CMS has the following policies and procedures concerning disclosures of information that will be maintained in the system. In general, disclosure of information from the

system will be approved only for the minimum information necessary to accomplish the purpose of the disclosure and only after CMS:

1. Determines that the use or disclosure is consistent with the reason that the data is being collected, *e.g.*, to establish an enterprise resource that will provide a single source of information for all CMS fraud, waste, and abuse activities.

2. Determines that:

a. The purpose for which the disclosure is to be made can only be accomplished if the record is provided in individually identifiable form;

b. The purpose for which the disclosure is to be made is of sufficient importance to warrant the effect and/or risk on the privacy of the individual that additional exposure of the record might bring; and

c. There is a strong probability that the proposed use of the data would in fact accomplish the stated purpose(s).

3. Requires the information recipient to:

a. Establish administrative, technical, and physical safeguards to prevent unauthorized use of disclosure of the record;

b. Remove or destroy at the earliest time all individually-identifiable information; and

c. Agree to not use or disclose the information for any purpose other than the stated purpose under which the information was disclosed.

4. Determines that the data are valid and reliable.

III. Proposed Routine Use Disclosures of Data in the System

A. The Privacy Act allows us to disclose information without an individual's consent if the information is to be used for a purpose that is compatible with the purpose(s) for which the information was collected. Any such compatible use of data is known as a ''routine use.'' The proposed routine uses in this system meet the compatibility requirement of the Privacy Act. We are proposing to establish the following routine use disclosures of information maintained in the system:

1. To agency contractors, consultants or grantees who have been engaged by the agency to assist in the performance of a service related to this system and who need to have access to the records in order to perform the activity.

We contemplate disclosing information under this routine use only in situations in which CMS may enter into a contractual or similar agreement with a third party to assist in accomplishing CMS function relating to purposes for this system. CMS occasionally contracts out certain of its functions when doing so would contribute to effective and efficient operations. CMS must be able to give a contractor, consultant or grantee whatever information is necessary for the contractors, consultants or grantees to fulfill its duties. In these situations, safeguards are provided in the contract prohibiting the contractor, consultant or grantee from using or disclosing the information for any purpose other than that described in the contract and requires the contractor, consultant or grantee to return or destroy all information at the completion of the contract.

2. To another Federal or State agency, agency of a State government, an agency established by State law, or its fiscal agent to:

a. Contribute to the accuracy of CMS' proper payment of Medicare and Medicaid benefits,

b. Enable such agency to administer a Federal health benefits program, or as necessary to enable such agency to fulfill a requirement of a Federal statute or regulation that implements a health benefits program funded in whole or in part with Federal funds, and/or

c. Assist Federal/state Medicaid programs within the State.

Other Federal or State agencies in their administration of a Federal health program may require ODR information in order to support evaluations and monitoring of Medicare and Medicaid claims information of beneficiaries, including proper reimbursement for services provided. In addition, other state agencies in their administration of a Federal health program may require ODR information for the purpose of determining, evaluating and/or assessing cost effectiveness, and/or the quality of health care services provided in the State.

Disclosure under this routine use shall be used by state Medicaid agencies pursuant to agreements with HHS for determining Medicaid and Medicare eligibility, for quality control studies, for determining eligibility of recipients of assistance under Titles IV, XVIII, and XIX of the Act, and for the administration of the Medicaid program. Data will be released to the state only on those individuals who are patients under the services of a Medicaid program within the state who are residents of that State.

3. To Quality Improvement Organizations (QIO) in connection with review of claims, or in connection with studies or other review activities conducted pursuant to Part B of Title XI of the Act, and in performing affirmative outreach activities to individuals for the purpose of establishing and maintaining their entitlement to Medicare benefits or health insurance plans.

As established by the Part D Program, QIOs will conduct reviews of prescription drug events data, or in connection with studies or other review activities conducted pursuant to Part D of Title XVIII of the Act.

QIOs will work to implement quality improvement programs, provide consultation to CMS, MA–PD, PDPs, and state agencies, to assist CMS in prescription drug event assessments, and prepare summary information for release to CMS.

QIOs will work to implement quality improvement programs, provide consultation to CMS, its contractors, and to State agencies. QIOs will assist State agencies in related monitoring and enforcement efforts, assist CMS and intermediaries in program integrity assessment, and prepare summary information for release to CMS.

4. To insurance companies, underwriters, third party administrators (TPA), employers, self-insurers, group health plans, health maintenance organizations (HMO), health and welfare benefit funds, managed care organizations, other supplemental insurers, non-coordinating insurers, multiple employer trusts, other groups providing protection against medical expenses of their enrollees without the beneficiary's authorization, and any entity having knowledge of the occurrence of any event affecting: (a) An individual's right to any such benefit or payment, or (b) the initial right to any such benefit or payment, for the purpose of coordination of benefits with the Medicare program and implementation of the Medicare Secondary Payer (MSP) provision at 42 U.S.C. 1395y (b). Information to be disclosed shall be limited to Medicare utilization data necessary to perform that specific function. In order to receive the information, they must agree to:

a. Certify that the individual about whom the information is being provided is one of its insured or employees, or is insured and/or employed by another entity for whom they serve as a TPA;

b. Utilize the information solely for the purpose of processing the individual's insurance claims; and

c. Safeguard the confidentiality of the data and prevent unauthorized access.

Other insurers, HMO, and Health Care Prepayment Plans may require ODR information in order to support evaluations and monitoring of Medicare claims information of beneficiaries, including proper reimbursement for services provided.

CMS, using its coordination of benefits contractor, allows this to happen by having payers that will be secondary to part D submit their enrollment data in exchange for enrollment data. The data shared is mainly enrollment information (date of enrollment).

5. To an individual or organization for a research project or in support of an evaluation project related to the prevention of disease or disability, the restoration or maintenance of health, or payment related projects.

The ODR data will provide for research or in support of evaluation projects, a broader, longitudinal, national perspective of the status of Medicare and Medicaid beneficiaries. CMS anticipates that many researchers will have legitimate requests to use this data in projects that could ultimately improve the care provided to Medicare and Medicaid beneficiaries and the policy that governs the care.

6. To the Department of Justice (DOJ), court or adjudicatory body when:

a. The agency or any component thereof, or

b. any employee of the agency in his or her official capacity, or

c. any employee of the agency in his or her individual capacity where the DOJ has agreed to represent the employee, or

d. the United States Government is a party to litigation or has an interest in such litigation, and by careful review, CMS determines that the records are both relevant and necessary to the litigation and that the use of such records by the DOJ, court or adjudicatory body is compatible with the purpose for which the agency collected the records.

Whenever CMS is involved in litigation, and occasionally when another party is involved in litigation and CMS' policies or operations could be affected by the outcome of the litigation, CMS would be able to disclose information to the DOJ, court or adjudicatory body involved.

7. To a CMS contractor (including, but not necessarily limited to fiscal intermediaries and carriers) that assists in the administration of a CMS-administered health benefits program, or to a grantee of a CMS-administered grant program, when disclosure is deemed reasonably necessary by CMS to prevent, deter, discover, detect, investigate, examine, prosecute, sue with respect to, defend against, correct, remedy, or otherwise combat fraud, waste, or abuse in such program.

We contemplate disclosing information under this routine use only in situations in which CMS may enter into a contractual relationship or grant with a third party to assist in accomplishing CMS functions relating to the purpose of combating fraud, waste, and abuse.

CMS occasionally contracts out certain of its functions and makes grants when doing so would contribute to effective and efficient operations. CMS must be able to give a contractor or grantee whatever information is necessary for the contractor or grantee to fulfill its duties. In these situations, safeguards are provided in the contract prohibiting the contractor or grantee from using or disclosing the information for any purpose other than that described in the contract and requiring the contractor or grantee to return or destroy all information.

8. To another Federal agency or to an instrumentality of any governmental jurisdiction within or under the control of the United States (including any State or local governmental agency), that administers, or that has the authority to investigate potential fraud, waste, or abuse in, a health benefits program funded in whole or in part by Federal funds, when disclosure is deemed reasonably necessary by CMS to prevent, deter, discover, detect, investigate, examine, prosecute, sue with respect to, defend against, correct, remedy, or otherwise combat fraud, waste, or abuse in such programs.

Other agencies may require ODR information for the purpose of combating fraud, waste, and abuse in such Federally-funded programs.

B. Additional Provisions Affecting Routine Use Disclosures

To the extent this system contains Protected Health Information (PHI) as defined by HHS regulation ''Standards for Privacy of Individually Identifiable Health Information'' (45 CFR parts 160 and 164, subparts A and E) 65 FR 82462 (12–28–00). Disclosures of such PHI that are otherwise authorized by these routine uses may only be made if, and as, permitted or required by the ''Standards for Privacy of Individually Identifiable Health Information.'' (*See* 45 CFR 164–512(a)(1)).

In addition, our policy will be to prohibit release even of data not directly identifiable, except pursuant to one of the routine uses or if required by law, if we determine there is a possibility that an individual can be identified through implicit deduction based on small cell sizes (instances where the patient population is so small that individuals could, because of the small size, use this information to deduce the identity of the beneficiary).

IV. Safeguards

CMS has safeguards in place for authorized users and monitors such users to ensure against excessive or unauthorized use. Personnel having access to the system have been trained in the Privacy Act and information security requirements. Employees who maintain records in this system are instructed not to release data until the intended recipient agrees to implement appropriate management, operational and technical safeguards sufficient to protect the confidentiality, integrity and availability of the information and information systems and to prevent unauthorized access.

This system will conform to all applicable Federal laws and regulations and Federal, HHS, and CMS policies and standards as they relate to information security and data privacy. These laws and regulations may apply but are not limited to: The Privacy Act of 1974; the Federal Information Security Management Act of 2002; the Computer Fraud and Abuse Act of 1986; the Health Insurance Portability and Accountability Act of 1996; the E-Government Act of 2002, the Clinger-Cohen Act of 1996; the Medicare Modernization Act of 2003, and the corresponding implementing regulations. OMB Circular A–130, Management of Federal Resources, Appendix III, Security of Federal Automated Information Resources also applies. Federal, HHS, and CMS policies and standards include but are not limited to: All pertinent National Institute of Standards and Technology publications; the HHS Information Systems Program Handbook and the CMS Information Security Handbook.

V. Effects of the System of Records on Individual Rights

CMS proposes to establish this system in accordance with the principles and requirements of the Privacy Act and will collect, use, and disseminate information only as prescribed therein. Data in this system will be subject to the authorized releases in accordance with the routine uses identified in this system of records.

CMS will take precautionary measures to minimize the risks of unauthorized access to the records and the potential harm to individual privacy or other personal or property rights of patients whose data are maintained in the system. CMS will collect only that information necessary to perform the system's functions. In addition, CMS will make disclosure from the proposed system only with consent of the subject individual, or his/her legal

representative, or in accordance with an applicable exception provision of the Privacy Act. CMS, therefore, does not anticipate an unfavorable effect on individual privacy as a result of information relating to individuals.

Dated: October 24, 2006.

John R. Dyer,

Chief Operating Officer, Centers for Medicare & Medicaid Services.

System No. 09–70–0568

SYSTEM NAME:

''One Program Integrity Data Repository (ODR), HHS/CMS/OFM''.

SECURITY CLASSIFICATION:

Level Three Privacy Act Sensitive Data.

SYSTEM LOCATION:

The Centers for Medicare & Medicaid Services (CMS) Data Center, 7500 Security Boulevard, North Building, First Floor, Baltimore, Maryland 21244–1850.

CATEGORIES OF INDIVIDUALS COVERED BY THE SYSTEM:

This system will maintain information on Medicare beneficiaries Parts A, B, C, and D and physicians, providers, employer plans, Medicaid recipients and Medicare secondary payers.

CATEGORIES OF RECORDS IN THE SYSTEM:

Information maintained in the system include, but are not limited to: Standard data for identification such as health insurance claim number, social security number, gender, race/ethnicity, date of birth, geographic location, Medicare enrollment, entitlement, and utilization information, Medicaid enrollment, entitlement, and utilization information, MSP data necessary for appropriate Medicare claim payment, hospice election, MA plan elections and enrollment, End Stage Renal Disease (ESRD) entitlement, historic and current listing of residences, and Medicare eligibility and Managed Care institutional status.

AUTHORITY FOR MAINTENANCE OF THE SYSTEM:

Authority for maintenance of this system is given under section 1893 of the Social Security Act.

PURPOSE(S) OF THE SYSTEM:

The primary purpose of this system is to establish an enterprise resource that will provide a single source of information for all CMS fraud and abuse activities. Information retrieved from this system of records will also be disclosed to: (1) Support regulatory, reimbursement, and policy functions performed within the agency or by a contractor, consultant or grantee; (2) assist another Federal or State agency, agency of a State government, an agency established by State law, or its fiscal agent; (3) support Quality Improvement Organizations (QIO); (4) assist other insurers for processing individual insurance claims; (5) facilitate research on the quality and effectiveness of care provided, as well as payment related projects; (6) support litigation involving the agency; and (7) combat fraud, waste, and abuse in certain health benefits programs.

ROUTINE USES OF RECORDS MAINTAINED IN THE SYSTEM, INCLUDING CATEGORIES OR USERS AND THE PURPOSES OF SUCH USES:

A. The Privacy Act allows us to disclose information without an individual's consent if the information is to be used for a purpose that is compatible with the purpose(s) for which the information was collected. Any such compatible use of data is known as a ''routine use.'' The proposed routine uses in this system meet the compatibility requirement of the Privacy Act. We are proposing to establish the following routine use disclosures of information maintained in the system:

1. To agency contractors, consultants or grantees who have been engaged by the agency to assist in the performance of a service related to this system and who need to have access to the records in order to perform the activity.

2. To another Federal or State agency, agency of a State government, an agency established by State law, or its fiscal agent to:

a. Contribute to the accuracy of CMS' proper payment of Medicare and Medicaid benefits,

b. Enable such agency to administer a Federal health benefits program, or as necessary to enable such agency to fulfill a requirement of a Federal statute or regulation that implements a health benefits program funded in whole or in part with Federal funds, and/or

c. Assist Federal/State Medicaid programs within the State.

3. To Quality Improvement Organizations (QIO) in connection with review of claims, or in connection with studies or other review activities conducted pursuant to Part B of Title XI of the Act, and in performing affirmative outreach activities to individuals for the purpose of establishing and maintaining their entitlement to Medicare benefits or health insurance plans.

4. To insurance companies, underwriters, third party administrators (TPA), employers, self-insurers, group health plans, health maintenance organizations (HMO), health and welfare benefit funds, managed care organizations, other supplemental insurers, non-coordinating insurers, multiple employer trusts, other groups providing protection against medical expenses of their enrollees without the beneficiary's authorization, and any entity having knowledge of the occurrence of any event affecting: (a) An individual's right to any such benefit or payment, or (b) the initial right to any such benefit or payment, for the purpose of coordination of benefits with the Medicare program and implementation of the Medicare Secondary Payer (MSP) provision at 42 U.S.C. 1395y (b). Information to be disclosed shall be limited to Medicare utilization data necessary to perform that specific function. In order to receive the information, they must agree to:

a. Certify that the individual about whom the information is being provided is one of its insured or employees, or is insured and/or employed by another entity for whom they serve as a TPA;

b. Utilize the information solely for the purpose of processing the individual's insurance claims; and

c. Safeguard the confidentiality of the data and prevent unauthorized access.

5. To an individual or organization for a research project or in support of an evaluation project related to the prevention of disease or disability, the restoration or maintenance of health, or payment related projects.

6. To the Department of Justice (DOJ), court or adjudicatory body when:

a. The agency or any component thereof, or

b. Any employee of the agency in his or her official capacity, or

c. Any employee of the agency in his or her individual capacity where the DOJ has agreed to represent the employee, or

d. The United States Government is a party to litigation or has an interest in such litigation, and by careful review, CMS determines that the records are both relevant and necessary to the litigation and that the use of such records by the DOJ, court or adjudicatory body is compatible with the purpose for which the agency collected the records.

7. To a CMS contractor (including, but not necessarily limited to fiscal intermediaries and carriers) that assists in the administration of a CMS-administered health benefits program, or to a grantee of a CMS-administered grant program, when disclosure is deemed reasonably necessary by CMS to prevent, deter, discover, detect, investigate, examine, prosecute, sue with respect to, defend against, correct,

remedy, or otherwise combat fraud, waste, or abuse in such program.

8. To another Federal agency or to an instrumentality of any governmental jurisdiction within or under the control of the United States (including any State or local governmental agency), that administers, or that has the authority to investigate potential fraud, waste, or abuse in, a health benefits program funded in whole or in part by Federal funds, when disclosure is deemed reasonably necessary by CMS to prevent, deter, discover, detect, investigate, examine, prosecute, sue with respect to, defend against, correct, remedy, or otherwise combat fraud, waste, or abuse in such programs.

B. Additional Provisions Affecting Routine Use Disclosures

To the extent this system contains Protected Health Information (PHI) as defined by HHS regulation ''Standards for Privacy of Individually Identifiable Health Information'' (45 CFR parts 160 and 164, subparts A and E) 65 FR 82462 (12–28–00). Disclosures of such PHI that are otherwise authorized by these routine uses may only be made if, and as, permitted or required by the ''Standards for Privacy of Individually Identifiable Health Information.'' (*See* 45 CFR 164–512(a)(1)).

In addition, our policy will be to prohibit release even of data not directly identifiable, except pursuant to one of the routine uses or if required by law, if we determine there is a possibility that an individual can be identified through implicit deduction based on small cell sizes (instances where the patient population is so small that individuals could, because of the small size, use this information to deduce the identity of the beneficiary).

POLICIES AND PRACTICES FOR STORING, RETRIEVING, ACCESSING, RETAINING, AND DISPOSING OF RECORDS IN THE SYSTEM:

STORAGE:

All records are stored electronically.

RETRIEVABILITY:

All records are accessible by HICN, SSN, and unique provider identification number.

SAFEGUARDS:

CMS has safeguards in place for authorized users and monitors such users to ensure against excessive or unauthorized use. Personnel having access to the system have been trained in the Privacy Act and information security requirements. Employees who maintain records in this system are instructed not to release data until the intended recipient agrees to implement appropriate management, operational and technical safeguards sufficient to protect the confidentiality, integrity and availability of the information and information systems and to prevent unauthorized access.

This system will conform to all applicable Federal laws and regulations and Federal, HHS, and CMS policies and standards as they relate to information security and data privacy. These laws and regulations may apply but are not limited to: The Privacy Act of 1974; the Federal Information Security Management Act of 2002; the Computer Fraud and Abuse Act of 1986; the Health Insurance Portability and Accountability Act of 1996; the E-Government Act of 2002, the Clinger-Cohen Act of 1996; the Medicare Modernization Act of 2003, and the corresponding implementing regulations. OMB Circular A–130, Management of Federal Resources, Appendix III, Security of Federal Automated Information Resources also applies. Federal, HHS, and CMS policies and standards include but are not limited to: All pertinent National Institute of Standards and Technology publications; the HHS Information Systems Program Handbook and the CMS Information Security Handbook.

RETENTION AND DISPOSAL:

Records will be retained until an approved disposition authority is obtained from the National Archives and Records Administration. All claims-related records are encompassed by the document preservation order and will be retained until notification is received from DOJ.

SYSTEM MANAGER AND ADDRESS:

Director, Division of MMA Integrity, Program Integrity Group, Office of Financial Management, CMS, Mailstop: C3–02–16, 7500 Security Boulevard, Baltimore, Maryland 21244–1850.

NOTIFICATION PROCEDURE:

For purpose of access, the subject individual should write to the system manager who will require the system name, HICN, address, date of birth, and gender, and for verification purposes, the subject individual's name (woman's maiden name, if applicable), and SSN. Furnishing the SSN is voluntary, but it may make searching for a record easier and prevent delay.

RECORD ACCESS PROCEDURE:

For purpose of access, use the same procedures outlined in Notification Procedures above. Requestors should also specify the record contents being sought. (These procedures are in accordance with department regulation 45 CFR 5b.5(a)(2)).

CONTESTING RECORDS PROCEDURES:

The subject individual should contact the system manager named above, and reasonably identify the records and specify the information to be contested. State the corrective action sought and the reasons for the correction with supporting justification. (These Procedures are in accordance with Department regulation 45 CFR 5b.7).

RECORDS SOURCE CATEGORIES:

The data contained in this system of records are extracted from other CMS systems of records: Medicare Drug Data Processing System; Medicare Beneficiary Database; Medicare Advantage Prescription Drug System; State Medicaid Records; Medicaid Statistical Information System; Retiree Drug Subsidy Program; Common Working File; National Claims History; Enrollment Database; Carrier Medicare Claims Record; Intermediary Medicare Claims Record; Unique Physician/Provider Identification Number; Provider Enrollment Chain & Ownership System (PECOS); and Medicare Supplier Identification File. Information will also be provided from the participating state Medicaid agencies.

SYSTEMS EXEMPTED FROM CERTAIN PROVISIONS OF THE ACT:

None.

[FR Doc. E6–18454 Filed 11–1–06; 8:45 am]

BILLING CODE 4120–03–P

DEPARTMENT OF HEALTH AND HUMAN SERVICES

Food and Drug Administration

[Docket No. 2006N–0431]

Agency Information Collection Activities; Proposed Collection; Comment Request; Substantial Evidence of Effectiveness of New Animal Drugs

AGENCY: Food and Drug Administration, HHS.

ACTION: Notice.

SUMMARY: The Food and Drug Administration (FDA) is announcing an opportunity for public comment on the proposed collection of certain information by the agency. Under the Paperwork Reduction Act of 1995 (the PRA), Federal agencies are required to publish notice in the **Federal Register** concerning each proposed collection of information, including each proposed extension of an existing collection of information, and to allow 60 days for public comment in response to the

notice. This notice solicits comments on an information collection to meet specified requirements for submitting adequate and well-controlled studies to provide substantial evidence of effectiveness for a new animal drug.

DATES: Submit written or electronic comments on the collection of information by January 2, 2007.

ADDRESSES: Submit electronic comments on the collection of information to: *http://www.fda.gov/dockets/ecomments*. Submit written comments on the collection of information to the Division of Dockets Management (HFA–305), Food and Drug Administration, 5630 Fishers Lane, rm. 1061, Rockville, MD 20852. All comments should be identified with the docket number found in brackets in the heading of this document.

FOR FURTHER INFORMATION CONTACT: Denver Presley, Office of the Chief Information Officer (HFA–250), Food and Drug Administration, 5600 Fishers Lane, Rockville, MD 20857, 301–827–1472.

SUPPLEMENTARY INFORMATION: Under the PRA (44 U.S.C. 3501–3520), Federal agencies must obtain approval from the Office of Management and Budget (OMB) for each collection of information they conduct or sponsor. ''Collection of information'' is defined in 44 U.S.C. 3502(3) and 5 CFR 1320.3(c) and includes agency requests or requirements that members of the public submit reports, keep records, or provide information to a third party. Section 3506(c)(2)(A) of the PRA (44 U.S.C. 3506(c)(2)(A)) requires Federal agencies to provide a 60-day notice in the **Federal Register** concerning each proposed collection of information, including each proposed extension of an existing collection of information, before submitting the collection to OMB for approval. To comply with this requirement, FDA is publishing notice of the proposed collection of information set forth in this document.

With respect to the following collection of information, FDA invites comments on these topics: (1) Whether the proposed collection of information is necessary for the proper performance of FDA's functions, including whether the information will have practical utility; (2) the accuracy of FDA's estimate of the burden of the proposed collection of information, including the validity of the methodology and assumptions used; (3) ways to enhance the quality, utility, and clarity of the information to be collected; and (4) ways to minimize the burden of the collection of information on respondents, including through the use of automated collection techniques, when appropriate, and other forms of information technology.

Substantial Evidence of Effectiveness of New Animal Drug—21 CFR 514.4(a) (OMB Control Number 0910–0356)—Extension

Section 512(d)(1)(E) of the Federal Food Drug and Cosmetic Act (the act) (21 U.S.C. 360b(d)(1)(E)) requires FDA to issue an order refusing to approve a New Animal Drug Application (NADA), if there is a lack of substantial evidence that a new animal drug will have the effect it is purported or represented to have under the conditions of use prescribed in the proposed labeling. Therefore, substantial evidence must be submitted to us as part of the NADA to establish effectiveness of a drug. Section 514.4(a) specifies requirements for submitting adequate and well-controlled studies to provide substantial evidence of effectiveness for a new animal drug. This information collection requirement provides for submissions of substantial evidence of effectiveness information via electronic submissions to the Center for Veterinary Medicine.

We are continuously seeking ways through advances in information technology to reduce the burden on the government and sponsors. We are continuing to look at what information can be submitted electronically and will permit electronic submission of data to NADA files as technology and resources permit.

FDA estimates the burden of this collection of information as follows:

TABLE 1.—ESTIMATED ANNUAL REPORTING BURDEN[1]

21 CFR Section	No. of Respondents	Annual Frequency per Response	Total Annual Responses	Hours per Respondent	Total Hours
514.4(a)	190	4,546	860	632.6	544,036

[1]There are no capital costs or operating and maintenance costs associated with this collection of information.

The estimate for the annual reporting burden for this collection of information was derived from discussion with industry and agency records.

Dated: October 27, 2006.

Jeffrey Shuren,

Assistant Commissioner for Policy.

[FR Doc. E6–18432 Filed 11–1–06; 8:45 am]

BILLING CODE 4160–01–S

DEPARTMENT OF HEALTH AND HUMAN SERVICES

Food and Drug Administration

[Docket No. 2006N–0430]

Agency Information Collection Activities; Proposed Collection; Comment Request; General Licensing Provisions: Biologics License Application, Changes to an Approved Application, Labeling, Revocation and Suspension, Postmarketing Studies Status Reports, and Forms FDA 356h and 2567

AGENCY: Food and Drug Administration, HHS.

ACTION: Notice.

SUMMARY: The Food and Drug Administration (FDA) is announcing an opportunity for public comment on the proposed collection of certain information by the agency. Under the Paperwork Reduction Act of 1995 (the PRA), Federal agencies are required to publish notice in the **Federal Register** concerning each proposed collection of information, including each proposed extension of an existing collection of information, and to allow 60 days for public comment in response to the notice. This notice solicits comments on the information collection related to general licensing provisions for biologics license applications (BLAs), changes to an approved application, labeling, revocation and suspension, postmarketing studies status reports, and Forms FDA 356h and 2567.

DATES: Submit written or electronic comments on the collection of information by January 2, 2007.

ADDRESSES: Submit electronic comments on the collection of information to: *http://www.fda.gov/dockets/ecomments*. Submit written comments on the collection of information to the Division of Dockets Management (HFA–305), Food and Drug Administration, 5630 Fishers Lane, rm. 1061, Rockville, MD 20852. All comments should be identified with the docket number found in brackets in the heading of this document.

FOR FURTHER INFORMATION CONTACT: Jonna Capezzuto, Office of the Chief Information Officer (HFA–250), Food and Drug Administration, 5600 Fishers Lane, Rockville, MD 20857, 301–827–4659.

SUPPLEMENTARY INFORMATION: Under the PRA (44 U.S.C. 3501–3520), Federal agencies must obtain approval from the Office of Management and Budget (OMB) for each collection of information they conduct or sponsor. ''Collection of information'' is defined in 44 U.S.C. 3502(3) and 5 CFR 1320.3(c) and includes agency requests or requirements that members of the public submit reports, keep records, or provide information to a third party. Section 3506(c)(2)(A) of the PRA (44 U.S.C. 3506(c)(2)(A)) requires Federal agencies to provide a 60-day notice in the **Federal Register** concerning each proposed collection of information, including each proposed extension of an existing collection of information, before submitting the collection to OMB for approval. To comply with this requirement, FDA is publishing notice of the proposed collection of information set forth in this document.

With respect to the following collection of information, FDA invites comments on these topics: (1) Whether the proposed collection of information is necessary for the proper performance of FDA's functions, including whether the information will have practical utility; (2) the accuracy of FDA's estimate of the burden of the proposed collection of information, including the validity of the methodology and assumptions used; (3) ways to enhance the quality, utility, and clarity of the information to be collected; and (4) ways to minimize the burden of the collection of information on respondents, including through the use of automated collection techniques, when appropriate, and other forms of information technology.

General Licensing Provisions: Biologics License Application, Changes to an Approved Application, Labeling, Revocation and Suspension, Postmarketing Studies Status Reports, and Forms FDA 356h and 2567 (OMB Control Number 0910–0338)—Extension

Under section 351 of the Public Health Service Act (the PHS Act) (42 U.S.C. 262), manufacturers of biological products must submit a license application for FDA review and approval before marketing a biological product in interstate commerce. Licenses may be issued only upon showing that the establishment and the products for which a license is desired meets standards prescribed in regulations designed to ensure the continued safety, purity, and potency of such products. All such licenses are issued, suspended, and revoked as prescribed by regulations in part 601 (21 CFR part 601).

Section 130(a) of the Food and Drug Administration Modernization Act (Public Law 105–115) amended the Federal Food, Drug, and Cosmetic Act (the act) by adding a new provision (section 506B of the act (21 U.S.C. 356b)) requiring reports of postmarketing studies for approved human drugs and licensed biological products. Section 506B of the act provides FDA with additional authority to monitor the progress of postmarketing studies that applicants have made a commitment to conduct and requires the agency to make publicly available information that pertains to the status of these studies.

Under section 506B(a) of the act, applicants that have committed to conducting a postmarketing study for an approved human drug or licensed biological product must submit to FDA a status report of the progress of the study or the reasons for the failure of the applicant to conduct the study. This report must be submitted within 1 year after the U.S. approval of the application and then annually until the study is completed or terminated.

Section 601.2(a) requires a manufacturer of a biological product to submit an application with accompanying information, including labeling information, to FDA for approval to market a product in interstate commerce. The container and package labeling requirements are provided under §§ 610.60, 610.61, and 610.62. The estimate for these regulations is included in the estimate under § 601.2(a) in table 1 of this document.Section 601.5(a) requires a licensee to submit to FDA notice of its intention to discontinue manufacture of a product or all products. Section 601.6(a) requires the licensee to notify selling agents and distributors upon suspension of its license, and provide FDA of such notification.

Section 601.12(a)(2) requires, generally, that the holder of an approved BLA must assess the effects of a manufacturing change before distributing a biological product made with the change. Section 601.12(a)(4) requires, generally, that the applicant must promptly review all promotional labeling and advertising to make it consistent with any labeling changes implemented. Section 601.12(a)(5) requires the applicant to include a list of all changes contained in the supplement or annual report; for supplements, this list must be provided in the cover letter. The burden estimates for § 601.12(a)(2) are included in the estimates for supplements (§ 601.12(b) and (c)) and annual reports (§ 601.12(d)). The burden estimates for § 601.12(a)(4) are included in the estimates under 601.12(f)(4) (Form FDA 2567) in table 1 of this document or OMB control number 0910–0001 (expires May 31, 2008) since the required information can also be submitted with Form FDA 2253.

Section 601.12(b)(1) and (b)(3), (c)(1) and (c)(3), (c)(5), and (d)(1) and (d)(3) require applicants to follow specific procedures to inform FDA of each change, in the product, production process, quality controls, equipment, facilities, responsible personnel or labeling established in an approved license application. The appropriate procedure depends on the potential for the change to have a substantial, moderate, or minimal adverse effect on the identity, strength, quality, purity, or potency of the products as they may relate to the safety or effectiveness of the product. Under § 601.12(b)(4), an applicant may ask FDA to expedite its review of a supplement for public health reasons or if a delay in making the change described in it would impose an extraordinary hardship of the applicant. The burden estimate for § 601.12(b)(4) is minimal and included in the estimate under § 601.12(b)(1) and (b)(3) in table 1 of this document.

Section 601.12(e) requires applicants to submit a protocol, or change to a protocol, as a supplement requiring FDA approval before distributing the product. Section 601.12(f)(1), (f)(2), and (f)(3) requires applicants to follow specific procedures to report labeling changes to FDA. Section 601.12(f)(4) requires applicants to report to FDA advertising and promotional labeling and any changes.

Under § 601.14, the content of labeling required in § 201.100(d)(3) must be in electronic format and in a form that FDA can process, review, and archive. This requirement is in addition to the provisions of §§ 601.2(a) and 601.12(f). The burden estimate for § 601.14 is minimal and included in the estimate under § 601.2(a) (BLAs) and 601.12(f)(1), (f)(2), and (f)(3) (supplements and annual reports) in table 1 of this document.

Section 601.45 requires applicants of biological products for serious or life-threatening illnesses to submit to the agency for consideration, during the pre-approval review period, copies of all promotional materials, including promotional labeling as well as advertisements.

In addition to §§ 601.2 and 601.12, there are other regulations in parts 640, 660, and 680 (21 CFR parts 640, 660, and 680) that relate to information to be submitted in a license application or supplement for certain blood or allergenic products: §§ 640.6, 640.17, 640.21(c), 640.22(c), 640.25(c), 640.56(c), 640.64(c), 640.74(a) and (b)(2), 660.51(a)(4), 680.1(b)(2)(iii), and 680.1(d). In table 1 of this document, the burden associated with the information collection requirements in these regulations is included in the burden estimate for § 601.2 and/or § 601.12. A regulation may be listed under more than one section of § 601.12 due to the type of category under which a change to an approved application may be submitted.

There are also additional container and/or package labeling requirements for certain licensed biological products: § 640.70(a) for Source Plasma; § 640.74(b)(3) and (b)(4) for Source Plasma Liquid; § 640.84(a) and (c) for Albumin; § 640.94(a) for Plasma Protein Fraction; § 660.2(c) for Antibody to Hepatitis B Surface Antigen; § 660.28(a) and (b) for Blood Grouping Reagent; § 660.35(a), (c through g), and (i through m) for Reagent Red Blood Cells; § 660.45 for Hepatitis B Surface Antigen; and § 660.55(a) and (b) for Anti-Human Globulin. The burden associated with the additional labeling requirements for submission of a license application for these certain biological products is minimal because the majority of the burden is associated with the requirements under § 610.60 through § 610.62 or § 809.10. Therefore, the burden estimates for these regulations are included in the estimate under § 610.60 through § 610.62 in table 1 of this document. The burden estimates associated with § 809.10 are approved under OMB control number 0910–0485 (expires June 30, 2008).

Section 601.25(b) requests interested persons to submit, for review and evaluation by an advisory review panel, published and unpublished data and information pertinent to a designated category of biological products that have been licensed prior to July 1, 1972. Section 601.26(f) requests that licensees submit to FDA a written statement intended to show that studies adequate and appropriate to resolve questions raised about a biological product have been undertaken for a product if designated as requiring further study under the reclassification procedures. Under § 601.25(b)(3), FDA estimates no burden for this regulation since all requested data and information had been submitted by 1974. Under § 601.26(f), FDA estimates no burden for this regulation since there are no products designated to require further study and none are predicted in the future. However, based on the possible reclassification of a product, the labeling for the product may need to be revised, or a manufacturer, on its own initiative, may deem it necessary for further study. As a result, any changes to product labeling would be reported under § 601.12.

Section 601.27(a) requires that applications for new biological products contain data that are adequate to assess the safety and effectiveness of the biological product for the claimed indications in pediatric subpopulations, and to support dosing and administration information. Section 601.27(b) provides that an applicant may request a deferred submission of some or all assessments of safety and effectiveness required under § 601.27(a). Section 601.27(c) provides that an applicant may request a full or partial waiver of the requirements under § 601.27(a). The burden estimates for § 601.27(a) are included in the burden estimate under § 601.2(a) in table 1 of this document, since these regulations deal with information to be provided in an application.

Section 601.28 requires sponsors of licensed biological products to submit the information in § 601.28(a), (b), and (c) to the Center for Biologics Evaluation and Research (CBER) or the Center for Drug Evaluation and Research (CDER) each year, within 60 days of the anniversary date of approval of the license. Section 601.28(a) requires sponsors to submit to FDA a brief summary stating whether labeling supplements for pediatric use have been submitted and whether new studies in the pediatric population to support appropriate labeling for the pediatric population have been initiated. Section 601.28(b) requires sponsors to submit to FDA an analysis of available safety and efficacy data in the pediatric population and changes proposed in the labeling based on this information. Section 601.28(c) requires sponsors to submit to FDA a statement on the current status of any postmarketing studies in the pediatric population performed by, or on behalf of, the applicant. If the postmarketing studies were required or agreed to, the status of these studies is to be reported under § 601.70, rather then under this section.

Sections 601.33 through 601.35 clarify the information to be submitted in an application to FDA to evaluate the safety and effectiveness of in vivo radiopharmaceuticals. The burden estimates for §§ 601.33 through 601.35 are included in the burden estimate under § 601.2(a) in table 1 of this document, since these regulations deal with information to be provided in an application.

Section 601.70(b) requires each applicant of a licensed biological product to submit annually a report to FDA on the status of postmarketing studies for each approved product application. Each annual postmarketing status report must be accompanied by a completed transmittal Form FDA 2252 (approved under OMB control number 0910–0001). Under § 601.70(d), two copies of the annual report shall be submitted to FDA.

Section 601.91(b)(3) requires applicants to prepare and provide labeling with relevant information to patient or potential patient for biological products approved under the subpart when human efficacy studies are not ethical or feasible (or based on evidence of effectiveness from studies in animals). Section 601.93 provides that biological products approved under this subpart are subject to the postmarketing recordkeeping and safety reporting applicable to all approved biological products. Section 601.94 requires applicants under this subpart to submit to the agency for consideration during preapproval review period copies of all promotional materials including promotional labeling as well as advertisements. Under § 601.93, any potential postmarketing reports and/or recordkeeping burdens would be included under the adverse experience reporting (AER) requirements under 21 CFR part 600 (OMB control number 0910–0308; expires May 31, 2005). Therefore, any burdens associated with these requirements would be reported under the AER information collection requirements (OMB control number 0910–0308).

Section 610.11(g)(2) (21 CFR 610.11(g)(2)) provides that a

manufacturer of certain biological products may request an exemption from the general safety test (GST) requirements contained in this subpart. Under § 610.11(g)(2), FDA requires only those manufacturers of biological products requesting an exemption from the GST to submit additional information as part of a license application or supplement to an approved license application. Therefore, the burden estimate for § 610.11(g)(2) is included in the estimate under §§ 601.2(a) and 601.12(b) in table 1 of this document.

Section 610.67 requires certain biological products to comply with the bar code requirements at § 201.25 (21 CFR 201.25). Section 201.25 is approved under OMB control number 0910–0537 (expires February 28, 2007).

Section 680.1(c) requires manufacturers to update annually their license file with the list of source materials and the suppliers of the materials.

Sections 600.15(b) and 610.53(d) require the submission of a request for an exemption or modification regarding the temperature requirements during shipment and from dating periods, respectively, for certain biological products. Section 606.110(b) requires the submission of a request for approval to perform plasmapheresis of donors who do not meet certain donor requirements for the collection of plasma containing rare antibodies. Under §§ 600.15(b), 610.53(d), and 606.110(b), a request for an exemption or modification to the requirements would be submitted as a supplement. Therefore, the burden hours for any submissions under §§ 600.15(b), 610.53(d), and 606.110(b) are included in the estimates under § 601.12(b) in table 1 of this document.

In July 1997, FDA revised Form FDA 356h ''Application to Market a New Drug, Biologic, or an Antibiotic Drug for Human Use'' to harmonize application procedures between CBER and CDER. The application form serves primarily as a checklist for firms to gather and submit certain information to FDA. The checklist helps to ensure that the application is complete and contains all the necessary information, so that delays due to lack of information may be eliminated. The form provides key information to FDA for efficient handling and distribution to the appropriate staff for review. The estimated burden hours for submissions to CDER using Form FDA 356h are reported under OMB control number 0910–0001.

Form FDA 2567 ''Transmittal of Labels and Circulars'' is used by manufacturers of licensed biological products to submit labeling (e.g., circulars, package labels, container labels, etc.) and labeling changes for FDA review and approval. The labeling information is submitted with the form for license applications, supplements, or as part of an annual report. Form FDA 2567 is also used for the transmission of advertisements and promotional labeling. Form FDA 2567 serves as an easy guide to assure that the manufacturer has provided the information required for expeditious handling of their labeling by CBER. For advertisements and promotional labeling, manufacturers of licensed biological products may submit to CBER either Form FDA 2567 or 2253. Form FDA 2253 was previously used only by drug manufacturers regulated by CDER. In August 1998, FDA revised and harmonized Form FDA 2253 so the form may be used to transmit specimens of promotional labeling and advertisements for biological products as well as for prescription drugs and antibiotics. The revised, harmonized form updates the information about the types of promotional materials and the codes that are used to clarify the type of advertisement or labeling submitted; clarifies the intended audience for the advertisements or promotional labeling (e.g., consumers, professionals, news services); and helps ensure that the submission is complete.

Under table 1 of this document, the number of respondents is based on the estimated annual number of manufacturers that submitted the required information to FDA or the number of submissions FDA received. Based on information obtained from FDA's database systems, there are an estimated 306 licensed biologics manufacturers. However, not all manufacturers will have any submissions in a given year and some may have multiple submissions. The total annual responses are based on the estimated number of submissions (i.e., license applications, labeling and other supplements, protocols, advertising and promotional labeling, notifications) for a particular product received annually by FDA. Based on previous estimates, the rate of submissions is not expected to change significantly in the next few years. The hours per response are based on information provided by industry and past FDA experience with the various submissions or notifications. The hours per response include the time estimated to prepare the various submissions or notifications to FDA, and, as applicable, the time required to fill out the appropriate form and collate the documentation. Additional information regarding these estimates is provided below as necessary.

Under §§ 601.2 and 601.12, the estimated hours per response are based on the average number of hours to submit the various submissions. The estimated average number of hours is based on the range of hours to complete a very basic application or supplement and a complex application or supplement.

Under § 601.6(a), the total annual responses are based on FDA estimates that establishments may notify an average of 20 selling agents and distributors of such suspension, and provide FDA of such notification. The number of respondents is based on the estimated annual number of suspensions of a biologic license.

Under §§ 601.12(f)(4) and 601.45, manufacturers of biological products may use either Form FDA 2567 or Form FDA 2253 to submit advertising and promotional labeling. Based on information obtained from FDA's database system, there were an estimated 3,600 submissions of advertising and promotional labeling in fiscal year 2004. FDA estimates that approximately 15 percent of those submissions were received with Form FDA 2567 resulting in an estimated 540 submissions. The burden hours for the remaining submissions received using Form FDA 2253 are reported under OMB control number 0910–0001.

Under § 601.70(b), FDA estimates that it takes an applicant approximately 24 hours (8 hours per study x 3) annually to gather, complete, and submit the appropriate information for each postmarketing status report (approximately two to four studies per report) and the accompanied transmittal Form FDA 2252. Included in these 24 hours is the time necessary to prepare and submit two copies of the annual progress report of postmarketing studies to FDA under § 601.70(d).

Under §§ 601.91 through 601.94, FDA expects to receive very few applications of this nature; however, for calculation purposes, FDA is estimating the annual submission of one application. Under §§ 601.93(b)(3) and 601.94, FDA estimates 240 hours for a manufacturer of a new biological product to develop patient labeling, and to submit the appropriate information and promotional labeling to FDA. The majority of the burden for developing the patient labeling is included under the reporting requirements for § 601.94, therefore minimal burden is calculated for providing the guide to patients under § 601.91(b)(3).

There were also 3,540 amendments to an unapproved application or supplement and 23 resubmissions (total of 3,563 submissions) submitted using Form FDA 356h.

FDA estimates the burden of this collection of information as follows:

TABLE 1.—ESTIMATED ANNUAL REPORTING BURDEN[1]

21 CFR Section	Form FDA No.	No. of Respondents	Annual Frequency per Response	Total Annual Responses	Hours per Response	Total Hours
601.2(a),[2] 610.60, 610.61, and 610.62[3]	2567/356h	14	2	28	860	24,080
601.5(a)	NA	16	3.13	50	.33	17
601.6(a)	NA	1	21	21	.33	7
601.12(a)(5)	NA	190	15.7	2,983	1	2,983
601.12(b)(1)/(b)(3)[4]	356h[2]	190	4.75	903	80	72,240
601.12(c)(1)/(c)(3[5]	356h[2]	98	2.60	255	50	12,750
601.12(c)(5)	356h[2]	34	1.38	47	50	2,350
601.12(d)(1)/(d)(3)	356h[2]	166	1.37	227	22.5	5,107.5
601.12(e)	356h[2]	14	1.43	20	120	2,400
601.12(f)(1)[6]	2567	12	1	12	40	480
601.12(f)(2)[6]	2567	10	1	10	20	200
601.12(f)(3)[7]	2567	70	1.43	100	10	1,000
601.12(f)(4)/601.45	2567	15	36	540	10	5,400
601.25(b)(3)	NA	0	0	0	0	0
601.26(f)	NA	0	0	0	0	0
601.27(b)	NA	3	1	3	24	72
601.27(c)	NA	7	1	7	8	56
601.28(a), (b), and (c)	NA	44	3.27	144	33.5	4,824
601.70(b) and (d)	2252	19	1.58	30	24	720
601.91(b)(3), 601.94	NA	1	1	1	240	240
610.67	NA	174	31	5,400	24	129,600
680.1(c)	NA	10	1	10	2	20
Amendments/Resubmissions	356h	306	11.6	3,563	20	71,260
Total						335,806.5

[1]There are no capital costs or operating and maintenance costs associated with this collection of information.
[2]The reporting requirements under §§ 601.14, 601.27(a), 601.33, 601.34, 601.35, 610.11(g)(2), 640.17, 640.25(c), 640.56(c), 640.74(b)(2), 660.51(a)(4), and 680.1(b)(2)(iii) are included in the estimate under § 601.2(a).
[3]The reporting requirements under §§ 640.70(a), 640.74(b)(3), and (b)(4), 640.84(a) and (c), 640.94(a), 660.2(c), 660.28(a) and (b), 660.35(a), (c through g), and (i through m), 660.45, and 660.55(a) and (b) are included under § 610.60 through 610.62.
[4]The reporting requirements under §§ 600.15(b), 610.11(g)(2), 610.53(d), 606.110(b), 640.6, 640.17, 640.21(c), 640.22(c), 640.25(c), 640.56(c), 640.64(c), 640.74(a) and (b)(2), and 680.1(d) are included in the estimate under § 601.12(b).
[5]The reporting requirements under §§ 640.17, 640.25(c), 640.56(c), and 640.74(b)(2) are included in the estimate under § 601.12(c).
[6]The reporting requirement under § 601.14 is included in the estimate under § 601.12(f)(1) and (f)(2).
[7]The reporting requirement under § 601.14 is included in the estimate under § 601.12(f)(3).

Under table 2, the estimated recordkeeping burden of 1 hour is based on previous estimates for the recordkeeping requirements associated with the AER system.

TABLE 2.—ESTIMATED ANNUAL RECORDKEEPING BURDEN[1]

21 CFR Section	No. of Recordkeepers	Annual Frequency per Recordkeeping	Total Annual Records	Hours per Record	Total Hours
601.91(b)(2)(iii)	1	1	1	1	1

[1]There are no capital costs or operating and maintenance costs associated with this collection of information.

Dated: October 25, 2006.

Jeffrey Shuren,

Assistant Commissioner for Policy.

[FR Doc. E6–18445 Filed 11–1–06; 8:45 am]

BILLING CODE 4160–01–S

DEPARTMENT OF HEALTH AND HUMAN SERVICES

Food and Drug Administration

Cellular, Tissue and Gene Therapies Advisory Committee; Notice of Meeting

AGENCY: Food and Drug Administration, HHS.

ACTION: Notice.

This notice announces a forthcoming meeting of a public advisory committee of the Food and Drug Administration (FDA). At least one portion of the meeting will be closed to the public.

Name of Committee: Cellular, Tissue and Gene Therapies Advisory Committee.

General Function of the Committee: To provide advice and recommendations to the agency on FDA's regulatory issues.

Date and Time: The meeting will be held by teleconference on November 20, 2006, from 2:15 p.m. to approximately 5 p.m.

Location: National Institutes of Health (NIH), Bldg. 29, rm. 121, 9000 Rockville Pike, MD. This meeting will be held by teleconference. The public is welcome to attend the meeting at the specified location. A speakerphone will be provided at the specified location for public participation in the meeting. Important information about transportation, directions to the NIH campus, parking, and security procedures is available on the Internet at *http://www.nih.gov/about/visitor/index.htm*. Visitors must show two forms of identification, one of which must be a Government-issued photo identification such as a Federal employee badge, driver's license, passport, green card, etc. If you are planning to drive to and park on the NIH campus, you must enter at the South Dr. entrance of the campus which is located on Wisconsin Ave. (the Medical Center Metro entrance), and allow extra time for vehicle inspection. Detailed information about security procedures is located at *http://www.nih.gov/about/visitorsecurity.htm*. Due to the limited available parking, visitors are encouraged to use public transportation. (FDA has verified the Web site addresses, but FDA is not responsible for any subsequent changes to the Web sites after this document publishes in the **Federal Register**.)

Contact Person: Gail Dapolito or Rosanna Harvey, Center for Biologics Evaluation and Research, (HFM–71), Food and Drug Administration, 1401 Rockville Pike, Rockville, MD, 20852, 301–827–0314, or FDA Advisory Committee Information Line, 1–800–741–8138 (301–443–0572 in the Washington, DC area), code 3014512389. Please call the Information Line for up-to-date information on this meeting.

Agenda: On November 20, 2006, the committee will meet in open session to hear updates of research programs in the Laboratory of Immunobiology and the Laboratory of Immunology, Office of Biotechnology Products, Center for Drug Evaluation and Research.

Procedure: On November 20, 2006, from 2:15 p.m. to approximately 4:30 p.m., the meeting is open to the public. Interested persons may present data, information, or views, orally or in writing, on issues pending before the committee. Written submissions may be made to the contact person on or before November 13, 2006. Oral presentations from the public will be scheduled between approximately 3:30 p.m. and 4:30 p.m. Time allotted for each presentation may be limited. Those desiring to make formal oral presentations should notify the contact person and submit a brief statement of the general nature of the evidence or arguments they wish to present, the names and addresses of proposed participants, and an indication of the approximate time requested to make their presentation on or before November 13, 2006.

Closed Committee Deliberations: On November 20, 2006, from approximately 4:30 p.m. to 5 p.m., the meeting will be closed to permit discussion where disclosure would constitute a clearly unwarranted invasion of personal privacy (5 U.S.C. 552b(c)(6)). The committee will discuss a report of intramural research programs.

Persons attending FDA's advisory committee meetings are advised that the agency is not responsible for providing access to electrical outlets.

FDA welcomes the attendance of the public at its advisory committee meetings and will make every effort to accommodate persons with physical disabilities or special needs. If you require special accommodations due to a disability, please contact Gail Dapolito at least 7 days in advance of the meeting.

Notice of this meeting is given under the Federal Advisory Committee Act (5 U.S.C. app. 2).

Dated: October 27, 2006.

Randall W. Lutter,

Associate Commissioner for Policy and Planning

[FR Doc. E6–18472 Filed 11–1–06; 8:45 am]

BILLING CODE 4160–01–S

DEPARTMENT OF HEALTH AND HUMAN SERVICES

Food and Drug Administration

Pediatric Oncology Subcommittee of the Oncologic Drugs Advisory Committee; Notice of Meeting

AGENCY: Food and Drug Administration, HHS.

ACTION: Notice.

This notice announces a forthcoming meeting of a public advisory committee of the Food and Drug Administration (FDA). The meeting will be open to the public.

Name of Committee: Pediatric Oncology Subcommittee of the Oncologic Drugs Advisory Committee.

General Function of the Committee: To provide advice and recommendations to the agency on FDA's regulatory issues.

Date and Time: The meeting will be held on December 6, 2006, from 8:30 a.m. to 5 p.m.

Location: Food and Drug Administration, Center for Drug Evaluation and Research Advisory Committee Conference Room, rm. 1066, 5630 Fishers Lane, Rockville, MD.

Contact Person: Johanna M. Clifford, Center for Drug Evaluation and Research (HFD–21), Food and Drug Administration, 5600 Fishers Lane, (for express delivery, 5630 Fishers Lane, rm. 1093) Rockville, MD 20857, 301–827–7001, FAX: 301–827–6776, e-mail: *cliffordj@cder.fda.gov*, or FDA Advisory Committee Information Line, 1–800–741–8138 (301–443–0572 in the Washington, DC area), code 3014512542. Please call the Information Line for up-to-date information on this meeting.

Agenda: The subcommittee will consider endpoints for trials intended to support the approval of new drugs to treat pediatric brain tumors. The background material will become available no later than the day before the meeting and will be posted on FDA's Website at *http://www.fda.gov/ohrms/dockets/ac/acmenu.htm*. under the heading ''Oncologic Drugs Advisory Committee.'' (Click on the year 2006 and scroll down to the previously named committee meeting).

Procedure: Interested persons may present data, information, or views, orally or in writing, on issues pending before the subcommittee. Written submissions may be made to the contact person on or before November 21, 2006. Oral presentations from the public will be scheduled between approximately 11 a.m. to 12 noon. Time allotted for each presentation may be limited. Those desiring to make formal oral presentations should notify the contact person and submit a brief statement of the general nature of the evidence or arguments they wish to present, the names and addresses of proposed participants, and an indication of the approximate time requested to make their presentation on or before November 21, 2006.

Persons attending FDA's advisory committee meetings are advised that the agency is not responsible for providing access to electrical outlets.

FDA welcomes the attendance of the public at its advisory committee meetings and will make every effort to accommodate persons with physical disabilities or special needs. If you require special accommodations due to a disability, please contact Johanna Clifford at least 7 days in advance of the meeting.

Notice of this meeting is given under the Federal Advisory Committee Act (5 U.S.C. app. 2).

Dated: October 26, 2006.

Randall W. Lutter,

Associate Commissioner for Policy and Planning.

[FR Doc. E6–18442 Filed 11–1–06; 8:45 am]

BILLING CODE 4160–01–S

DEPARTMENT OF HEALTH AND HUMAN SERVICES

Food and Drug Administration

[Docket No. 2005D–0490]

Guidance for Industry: Questions and Answers Regarding Food Allergens, Including the Food Allergen Labeling and Consumer Protection Act of 2004 (Edition 4); Availability

AGENCY: Food and Drug Administration, HHS.

ACTION: Notice of availability of guidance.

SUMMARY: The Food and Drug Administration (FDA) is announcing the availability of a revised guidance document entitled ''Guidance for Industry: Questions and Answers Regarding Food Allergens, including the Food Allergen Labeling and Consumer Protection Act of 2004 (Edition 4).'' The guidance explains, using a question and answer format, FDA's current thinking on a number of issues related to the regulation of food allergens, including implementation of the Food Allergen Labeling and Consumer Protection Act of 2004 (FALCPA).

DATES: Submit written or electronic comments on the agency guidance at any time.

ADDRESSES: Submit written comments on the guidance to the Division of Dockets Management (HFA–305), Food and Drug Administration, 5630 Fishers Lane, rm. 1061, Rockville, MD 20852. Submit electronic comments to *http://www.fda.gov/dockets/ecomments*. See the **SUPPLEMENTARY INFORMATION** section for electronic access to the guidance document.

FOR FURTHER INFORMATION CONTACT: Rhonda R. Kane, Center for Food Safety and Applied Nutrition (HFS–820), Food and Drug Administration, 5100 Paint Branch Pkwy., College Park, MD 20740, 301–436–2371, or by e-mail: *rhonda.kane@fda.hhs.gov*.

SUPPLEMENTARY INFORMATION:

I. Background

The FALCPA (Public Law 108–282) amends the Federal Food, Drug, and Cosmetic Act (the act) and requires that the label of a food product that is, or that contains, an ingredient that bears or contains a ''major food allergen'' declare the presence of the allergen as specified by FALCPA. FALCPA defines a ''major food allergen'' as one of eight foods or food groups or a food ingredient that contains protein derived from one of those foods or food groups. A food ingredient may be exempt from FALCPA's labeling requirements if it does not cause an allergic response that poses a risk to human health or if it does not contain allergenic protein. FALPCA's labeling requirements apply to products labeled on or after January 1, 2006.

II. Discussion

FDA has received numerous questions about the application of FALCPA's requirements to food products. To explain FALCPA's requirements as well as FDA's current thinking on several issues relating to the regulation of food allergens, on October 5, 2005, FDA posted on the agency's Web site the first edition of a guidance entitled ''Guidance for Industry: Questions and Answers Regarding Food Allergens, including the Food Allergen Labeling and Consumer Protection Act of 2004'' (*http://www.cfsan.fda.gov/~dms/alrguid.html*). This guidance was subsequently updated in December 2005 (Edition 2) and April 2006 (Edition 3). The guidance that is the subject of this document ''Guidance for Industry: Questions and Answers Regarding Food Allergens, including the Food Allergen Labeling and Consumer Protection Act of 2004 (Edition 4),'' responds to additional questions about FALCPA and food allergens. The revised guidance is intended to share FDA's current thinking on the additional questions presented in the guidance.

Given the nature of the revisions to the guidance, FDA is issuing the guidance as a level 1 guidance. Consistent with FDA's good guidance practices regulation (§ 10.115 (21 CFR 10.115)), the agency will accept comments, but it is implementing the guidance document immediately, in accordance with § 10.115(g)(2), because the agency has determined that prior public participation is not feasible or appropriate. As noted, FALPCA's labeling requirements apply to products labeled on or after January 1, 2006. Clarifying FDA's current thinking on the additional issues presented by FALCPA's implementation will help facilitate the food industry's compliance with FALCPA's requirements.

FDA expects to continue to receive questions regarding the implementation of FALCPA and the regulation of food allergens generally. The agency intends to respond to these inquires under

§ 10.115 as promptly as possible, using a question-and-answer format. The agency believes that, at the present time, it is reasonable to maintain all responses to questions concerning food allergens and FALCPA in a single document that is periodically updated as the agency receives and responds to additional questions. The following four indicators will be employed to help users of the guidance identify revisions: (1) The guidance will be identified as a revision of a previously issued document, (2) the revision date of the guidance will appear on its cover, (3) the edition number of the guidance will be included in its title, and (4) questions and answers that have been added to the original guidance will be identified as such in the body of the guidance.

This guidance represents the agency's current thinking on issues related to FALCPA and food allergens generally that are presented in the guidance. The guidance does not create or confer any rights for or on any person and does not operate to bind FDA or the public. An alternative approach may be used if such approach satisfies the requirements of the applicable statutes and regulations.

III. Comments

Interested persons may submit to the Division of Dockets Management (see **ADDRESSES**) written or electronic comments regarding this guidance at any time. Submit a single copy of electronic comments or two paper copies of any mailed comments, except that individuals may submit one paper copy. Comments are to be identified with the docket number found in brackets in the heading of this document. Received comments and the guidance may be seen in the Division of Dockets Management between 9 a.m. and 4 p.m., Monday through Friday.

IV. Electronic Access

Persons with access to the Internet may obtain the guidance document at *http://www.cfsan.fda.gov/guidance.html* or *http://www.fda.gov/ohrms/dockets/default.htm*.

Dated: October 26, 2006.

Jeffrey Shuren,

Assistant Commissioner for Policy.

[FR Doc. E6–18443 Filed 11–1–06; 8:45 am]

BILLING CODE 4160–01–S

DEPARTMENT OF HOMELAND SECURITY

Office of the Secretary

[DHS–2006–0060]

Privacy Act of 1974; System of Records

AGENCY: Privacy Office, Department of Homeland Security.

ACTION: Notice of Privacy Act system of records.

SUMMARY: To provide expanded notice and transparency to the public, the Department of Homeland Security, U.S. Customs and Border Protection gives notice regarding the Automated Targeting System, which is the enforcement screening module associated with the Treasury Enforcement Communications System and was previously covered by the Treasury Enforcement Communications System ''System of Records Notice.'' This system of records is subject to the Privacy Act of 1974, as amended (5 U.S.C. 552a).

The Treasury Enforcement Communications System is established as an overarching law enforcement information collection, targeting, and sharing environment. This environment is comprised of several modules designed to collect, maintain, and screen data, conduct targeting, and share information. Among these modules, the Automated Targeting System performs screening of both inbound and outbound cargo, travelers, and conveyances. As part of this screening function, the Automated Targeting System compares information obtained from the public with a set series of queries designed to permit targeting of conveyances, goods, cargo, or persons to facilitate DHS's border enforcement mission.

The risk assessment and links to information upon which the assessment is based, which are stored in the Automated Targeting System, are created from existing information in a number of sources, including, but not limited to: the trade community through the Automated Commercial System or its successor; the Automated Commercial Environment system; the traveling public through information submitted by their carrier to the Advance Passenger Information System; persons crossing the United States land border by automobile or on foot; the Treasury Enforcement Communications System, or its successor; or law enforcement information maintained in other parts of the Treasury Enforcement Communications System that pertain to persons, goods, or conveyances.

As part of the information it accesses for screening, Passenger Name Record (PNR) information, which is currently collected pursuant to an existing CBP regulation (19 CFR 122.49d) from both inbound and outbound travelers through the carrier upon which travel occurs, is stored in the Automated Targeting System. PNR is comprised of data which carriers collect as a matter of their usual business practice in negotiating and arranging the travel transaction.

As noted above, this system of records notice does not identify or create any new collection of information, rather DHS is providing additional notice and transparency of the functionality of these systems.

DATES: The new system of records will be effective December 4, 2006, unless comments are received that result in a contrary determination.

ADDRESSES: You may submit comments, identified by *docket number*, by *one* of the following methods:

- *Federal eRulemaking Portal: http://www.regulations.gov.* Follow the instructions for submitting comments via docket number DH6–2006–0060.
- *Fax:* 202–572–8727.
- *Mail:* Comments by mail are to be addressed to the Border Security Regulations Branch, Office of Regulations and Rulings, Bureau of Customs and Border Protection, 1300 Pennsylvania Avenue, NW. (Mint Annex), Washington, DC 20229. Comments by mail may also be submitted to Hugo Teufel III, Chief Privacy Officer, Department of Homeland Security, 601 S. 12th Street, Arlington, VA 22202–4220.
- *Instructions:* All submissions received must include the agency name and docket number for this rulemaking. All comments received will be posted without change to *http://www.regulations.gov*, including any personal information provided.
- *Docket:* For access to the docket to read background documents or comments received go to *http://www.regulations.gov*. Submitted comments may also be inspected during regular business days between the hours of 9 a.m. and 4:30 p.m. at the Regulations Branch, Office of Regulations and Rulings, Bureau of Customs and Border Protection, 799 9th Street, NW., 5th Floor, Washington, DC. Arrangements to inspect submitted comments should be made in advance by calling Mr. Joseph Clark at (202) 572–8768.

FOR FURTHER INFORMATION CONTACT: For general questions please contact: Laurence E. Castelli (202–572–8790), Chief, Privacy Act Policy and Procedures Branch, Bureau of Customs and Border Protection, Office of Regulations & Rulings, Mint Annex, 1300 Pennsylvania Ave., NW., Washington, DC 20229. For privacy issues please contact: Hugo Teufel III (571–227–3813), Chief Privacy Officer, Privacy Office, U.S. Department of Homeland Security, Washington, DC 20528.

SUPPLEMENTARY INFORMATION: Bureau of Customs and Border Protection (CBP), Department of Homeland Security (DHS), has traditionally relied on computerized cargo screening processes to aid the CBP inspection workforce in the cargo release process. Separately, CBP has used the advance submission of traveler information to aid in screening travelers to facilitate its border enforcement mission. The Automated Targeting System (ATS) associates information obtained from CBP's cargo, travelers, and border enforcement systems with a level of risk posed by each item and person as determined through the rule based query of the cargo or personal information accessed by ATS.

The Privacy Act embodies fair information principles in a statutory framework governing the means by which the United States Government collects, maintains, uses, and disseminates personally identifiable information. The Privacy Act applies to information that is maintained in a ''system of records.'' A ''system of records'' is a group of any records under the control of an agency from which information is retrieved by the name of the individual or by some identifying number, symbol, or other identifying particular assigned to the individual. In the Privacy Act, an individual is defined to encompass United States citizens and legal permanent residents. ATS involves the collection and creation of information that is maintained in a system of records.

Previously, this information was covered by the Treasury Enforcement Communications System (TECS) system of records notice, as ATS is a functional module associated with the environment of TECS. ATS is employed as an analytical tool to enhance CBP screening and targeting capabilities by permitting query-based comparisons of different data modules associated with the TECS system, as well as comparisons with data sets from sources outside of TECS. As part of DHS's updating of its system of records notices and in an effort to provide more detailed information to the traveling public and trade community, CBP has determined that ATS should be noticed as a separate system of records, giving greater visibility into its targeting and screening efforts.

The Privacy Act requires each agency to publish in the **Federal Register** a description denoting the type and character of each system of records that the agency maintains, and the routine uses that are contained in each system in order to make agency recordkeeping practices transparent, to notify individuals regarding the uses to which personally identifiable information is put, and to assist the individual to more easily find such files within the agency.

DHS is hereby publishing a description of the system of records referred to as the Automated Targeting System. In accordance with 5 U.S.C. 552a(r), a report concerning this record system has been sent to the Office of Management and Budget and to the Congress.

DHS/CBP–006

SYSTEM NAME:

Automated Targeting System (ATS)—DHS/CBP.

SYSTEM LOCATION:

This computer database is located at the Bureau of Customs and Border Protection (CBP) National Data Center in Washington, DC. Computer terminals are located at customhouses, border ports of entry, airport inspection facilities under the jurisdiction of the Department of Homeland Security (DHS) and other locations at which DHS authorized personnel may be posted to facilitate DHS's mission.

CATEGORIES OF INDIVIDUALS COVERED BY THE SYSTEM:

A. Persons seeking to enter or exit the United States;

B. Persons who engage in any form of trade or other commercial transaction related to the importation or exportation of merchandise;

C. Persons who are employed in any capacity related to the transit of merchandise intended to cross the United States border; and

D. Persons who serve as operators, crew, or passengers on any vessel, vehicle, aircraft, or train who enters or exits the United States.

CATEGORIES OF RECORDS IN THE SYSTEM:

ATS builds a risk assessment for cargo, conveyances, and travelers based on criteria and rules developed by CBP. ATS maintains the resulting assessment together with a record of which rules were used to develop the assessment. With the exception of PNR information, discussed below, ATS maintains a pointer or reference to the underlying records from other systems that resulted in a particular assessment. This assessment and related rules history associated with developing a risk assessment for an individual are maintained for up to forty years to support ongoing targeting requirements.

ATS—P (Automated Targeting System—Passenger), a component of ATS, maintains the PNR information obtained from commercial carriers for purposes of assessing the risk of international travelers. PNR *may* include such items as:

- PNR record locator code,
- Date of reservation,
- Date(s) of intended travel,
- Name,
- Other names on PNR,
- Number of travelers on PNR,
- Seat information,
- Address,
- All forms of payment information,
- Billing address,
- Contact telephone numbers,
- All travel itinerary for specific PNR,
- Frequent flyer information,
- Travel agency,
- Travel agent,
- Code share PNR information,
- Travel status of passenger,
- Split/Divided PNR information,
- Identifiers for free tickets,
- One-way tickets,
- E-mail address,
- Ticketing field information,
- Automated Ticketing Fare Quote (ATFQ) fields,
- General remarks,
- Ticket number,
- Seat number,
- Date of ticket issuance,
- Any collected APIS information,
- No show history,
- Number of bags,
- Bag tag numbers,
- Go show information,
- Number of bags on each segment,
- Other Supplementary information (OSI),
- Special Services information (SSI),
- Special Services Request (SSR),
- Voluntary/involuntary upgrades,
- Received from information, and
- All historical changes to the PNR

Not all carriers maintain the same sets of information for PNR.

AUTHORITY FOR MAINTENANCE OF THE SYSTEM:

19 U.S.C. 482, 1461, 1496, and 1581–1582, 8 U.S.C. 1357, Title VII of Public Law 104–208, and 49 U.S.C. 44909.

PURPOSE(S):

(a) To perform targeting of individuals, including passengers and

crew, focusing CBP resources by identifying persons who may pose a risk to border security, may be a terrorist or suspected terrorist, or may otherwise be engaged in activity in violation of U.S. law;

(b) To perform targeting of conveyances and cargo to focus CBP's resources for inspection and examination and enhance CBP's ability to identify potential violations of U.S. law, possible terrorist threats, and other threats to border security; and

(c) To assist in the enforcement of the laws enforced or administered by DHS, including those related to counterterrorism.

ROUTINE USES OF RECORDS MAINTAINED IN THE SYSTEM, INCLUDING CATEGORIES OF USERS AND THE PURPOSES OF SUCH USES:

In addition to those disclosures generally permitted under 5 U.S.C. 552a(b) of the Privacy Act, all or a portion of the records or information contained in this system may be disclosed outside DHS as a routine use pursuant to 5 U.S.C. 552a(b)(3) as follows:

A. To appropriate Federal, state, local, tribal, or foreign governmental agencies or multilateral governmental organizations responsible for investigating or prosecuting the violations of, or for enforcing or implementing, a statute, rule, regulation, order, or license, where CBP believes the information would assist enforcement of civil or criminal laws;

B. To appropriate Federal, state, local, tribal, or foreign governmental agencies maintaining civil, criminal, or other relevant enforcement information or other pertinent information, which has requested information relevant or necessary to the requesting agency's hiring or retention of an individual, or issuance of a security clearance, license, contract, grant, or other benefit and disclosure is appropriate to the proper performance of the official duties of the person making the disclosure;

C. To a court, magistrate, or administrative tribunal in the course of presenting evidence, including disclosures to opposing counsel or witnesses in the course of civil discovery, litigation, or settlement negotiations, or in response to a subpoena, or in connection with criminal law proceedings;

D. To third parties during the course of a law enforcement investigation to the extent necessary to obtain information pertinent to the investigation, provided disclosure is appropriate to the proper performance of the official duties of the officer making the disclosure;

E. To an agency, organization, or individual for the purposes of performing audit or oversight operations as authorized by law;

F. To a Congressional office, for the record of an individual in response to an inquiry from that Congressional office made at the request of the individual to whom the record pertains;

G. To contractors, grantees, experts, consultants, students, and others performing or working on a contract, service, grant, cooperative agreement, or other assignment for the Federal government, when necessary to accomplish an agency function related to this system of records, in compliance with the Privacy Act of 1974, as amended;

H. To an organization or individual in either the public or private sector, either foreign or domestic, where there is a reason to believe that the recipient is or could become the target of a particular terrorist activity or conspiracy, to the extent the information is relevant to the protection of life or property and disclosure is appropriate to the proper performance of the official duties of the person making the disclosure;

I. To the United States Department of Justice (including United States Attorney offices) or other Federal agency conducting litigation or in proceedings before any court, adjudicative or administrative body, when it is necessary to the litigation and one of the following is a party to the litigation or has an interest in such litigation: (a) DHS, or (b) any employee of DHS in his/her official capacity, or (c) any employee of DHS in his/her individual capacity where DOJ or DHS has agreed to represent said employee, or (d) the United States or any agency thereof;

J. To the National Archives and Records Administration or other Federal government agencies pursuant to records management inspections being conducted under the authority of 44 U.S.C. 2904 and 2906;

K. To appropriate Federal, state, local, tribal, or foreign governmental agencies, if necessary to obtain information relevant to a DHS decision concerning the hiring or retention of an employee, the issuance of a security clearance, the reporting of an investigation of an employee, the letting of a contract, or the issuance of a license, grant or other benefit and disclosure is appropriate to the proper performance of the official duties of the individual making the disclosure;

L. To appropriate Federal, State, local, tribal, or foreign governmental agencies or multilateral governmental organizations, for purposes of assisting such agencies or organizations in preventing exposure to or transmission of a communicable or quarantinable disease or for combatting other significant public health threats;

M. To Federal and foreign government intelligence or counterterrorism agencies or components where CBP becomes aware of an indication of a threat or potential threat to national or international security, or where such use is to assist in anti-terrorism efforts and disclosure is appropriate to the proper performance of the official duties of the person making the disclosure;

N. To appropriate Federal, State, local, tribal, or foreign governmental agencies or multilateral governmental organizations where CBP is aware of a need to utilize relevant data for purposes of testing new technology and systems designed to enhance border security or identify other violations of law;

O. To appropriate agencies, entities, and persons when (1) it is suspected or confirmed that the security or confidentiality of information in the system of records has been compromised; (2) CBP has determined that as a result of the suspected or confirmed compromise there is a risk of harm to economic or property interests, identity theft or fraud, or harm to the security or integrity of this system or other systems or programs (whether maintained by CBP or another agency or entity) that rely upon the compromised information; and (3) the disclosure is made to such agencies, entities, and persons when reasonably necessary to assist in connection with the CBP's efforts to respond to the suspected or confirmed compromise and prevent, minimize, or remedy such harm.

POLICIES AND PRACTICES FOR STORING, RETRIEVING, ACCESSING, RETAINING, AND DISPOSING OF RECORDS IN THE SYSTEM:

STORAGE:

The data is stored electronically at the National Data Center for current data and offsite at an alternative data storage facility for historical logs and system backups.

RETRIEVABILITY:

The data is retrievable by name or personal identifier from an electronic database.

SAFEGUARDS:

All records are protected from unauthorized access through appropriate administrative, physical, and technical safeguards. These safeguards include all of the following: restricting access to those with a ''need to know''; using locks, alarm devices,

and passwords; compartmentalizing databases; auditing software; and encrypting data communications.

ATS also monitors source systems for changes to the source data. The system manager, in addition, has the capability to maintain system back-ups for the purpose of supporting continuity of operations and the discrete need to isolate and copy specific data access transactions for the purpose of conducting security incident investigations. ATS information is secured in full compliance with the requirements of the DHS IT Security Program Handbook. This handbook establishes a comprehensive information security program.

Access to the risk assessment results and related rules is restricted to a limited number of authorized government personnel who have gone through extensive training on the appropriate use of this information and CBP policies, including for security and privacy. These individuals are trained to review the risk assessments and background information to identify individuals who may likely pose a risk. To ensure that ATS is being accessed and used appropriately, audit logs are created and reviewed routinely by CBP's Office of Internal Affairs.

RETENTION AND DISPOSAL:

The information initially collected in ATS is used for entry screening purposes. Records in this system will be retained and disposed of in accordance with a records schedule to be approved by the National Archives and Records Administration. ATS both collects information directly, and derives other information from various systems. To the extent information is collected from other systems, data is retained in accordance with the record retention requirements of those systems.

The retention period for data specifically maintained in ATS will not exceed forty years at which time it will be deleted from ATS. Up to forty years of data retention may be required to cover the potentially active lifespan of individuals associated with terrorism or other criminal activities. The touchstone for data retention, however, is its relevance and utility. Accordingly, CBP will regularly review the data maintained in ATS to ensure its continued relevance and usefulness. If no longer relevant and useful, CBP will delete the information. All risk assessments need to be maintained because the risk assessment for individuals who are deemed low risk will be relevant if their risk profile changes in the future, for example, if terrorist associations are identified. Additionally, certain data collected directly by ATS may be subject to shorter retention limitations pursuant to separate arrangements. The adoption of shorter retention periods may not be publicly disclosed if DHS concludes that disclosure would affect operational security, for example by giving terrorism suspects the certainty that their past travel patterns would no longer be known to U.S. authorities.

SYSTEM MANAGER(S) AND ADDRESS:

Executive Director, National Targeting and Security, Office of Field Operations, U.S. Customs and Border Protection, Ronald Reagan Building and Director, Targeting and Analysis, Systems Program Office, Office of Information Technology, U.S. Customs and Border Protection.

NOTIFICATION PROCEDURE:

Generally, this system of records may not be accessed for purposes of determining if the system is a record pertaining to a particular individual. (See 5 U.S.C. 552a(e)(4)(G) and (f)(1)).

General inquiries regarding ATS may be directed to the Customer Satisfaction Unit, Office of Field Operations, U.S. Customs and Border Protection, Room 5.5–C, 1300 Pennsylvania Avenue, NW., Washington, DC 20229 (phone: (202) 344–1850 and fax: (202) 344–2791).

RECORD ACCESS PROCEDURES:

Generally, this system of records may not be accessed under the Privacy Act for the purpose of inspection. The majority of this system is exempted from this requirement pursuant to 5 U.S.C. 552a(j)(2) and (k)(2).

General inquiries regarding ATS may be directed to the Customer Satisfaction Unit, Office of Field Operations, U.S. Customs and Border Protection, Room 5.5–C, 1300 Pennsylvania Avenue, NW., Washington, DC 20229.

Requests should conform to the requirements of 6 CFR Part 5, Subpart B, which provides the rules for requesting access to Privacy Act records maintained by DHS. The envelope and letter should be clearly marked ''Privacy Act Access Request.'' The request should include a general description of the records sought and must include the requester's full name, current address, and date and place of birth. The request must be signed and either notarized or submitted under penalty of perjury.

CONTESTING RECORD PROCEDURES:

Since this system of records may not be accessed, generally, for purposes of determining if the system contains a record pertaining to a particular individual and those records, if any, cannot be inspected, the system may not be accessed under the Privacy Act for the purpose of contesting the content of the record.

RECORD SOURCE CATEGORIES:

The system contains information derived from other law enforcement systems operated by DHS and other government agencies, which collected the underlying data from individuals and public entities directly.

In addition, the system contains information collected from carriers that operate vessels, vehicles, aircraft, and/or trains that enter or exit the United States.

EXEMPTIONS CLAIMED FOR THE SYSTEM:

Pursuant to 31 CFR 1.36 pertaining to the Treasury Enforcement Communications System, the Automated Targeting System, which was previously covered by the Treasury Enforcement Communications System (TECS) system of records notice and associated with the below exemptions, records and information in this system are exempt from 5 U.S.C. 552a(c)(3), (d)(1), (d)(2), (d)(3), (d)(4), (e)(1), (e)(4)(G), (H), and (I), and (f) of the Privacy Act pursuant to 5 U.S.C. 552a(j)(2) and (k)(2). DHS intends to review these exemptions and, if warranted, issue a new set of exemptions specific to ATS within ninety (90) days of the publication of this notice.

Dated: October 27, 2006.

Hugo Teufel III,

Chief Privacy Officer.

[FR Doc. 06–9026 Filed 10–30–06; 3:31 pm]

BILLING CODE 4410–10–P

DEPARTMENT OF HOMELAND SECURITY

Coast Guard

[USCG–2005–22732]

Domestic Vessel Passenger Weights—Voluntary Interim Measures

AGENCY: Coast Guard, DHS.

ACTION: Notice; request for public comments.

SUMMARY: The Coast Guard announces supplemental guidance for owners and operators of small passenger vessels to avoid operation in environmental conditions that are inappropriate for their vessels. The Coast Guard is requesting public comments on this notice.

DATES: Comments and related material must reach the Docket Management Facility not later than January 31, 2007.

ADDRESSES: You may submit comments identified by Coast Guard docket number USCG–2005–22732 to the Docket Management Facility at the U.S. Department of Transportation. To avoid duplication, please use only one of the following methods:

(1) *Web site: http://dms.dot.gov.*

(2) *Mail:* Docket Management Facility, U.S. Department of Transportation, 400 Seventh Street, SW., Washington, DC 20590–0001.

(3) *Fax:* 202–493–2251.

(4) *Delivery:* Room PL–401 on the Plaza level of the Nassif Building, 400 Seventh Street, SW., Washington, DC, between 9 a.m. and 5 p.m., Monday through Friday, except Federal holidays. The telephone number is 202–366–9329.

FOR FURTHER INFORMATION CONTACT: If you have questions on this notice, call Mr. William Peters, Naval Architecture Division, G–PSE–2, Coast Guard, telephone 202–372–1372. If you have questions on viewing or submitting material to the docket, call Ms. Renee V. Wright, Program Manager, Docket Operations, telephone 202–493–0402.

SUPPLEMENTARY INFORMATION:

Request for Comments

All comments received will be posted, without change, to *http://dms.dot.gov* and will include any personal information you have provided. We have an agreement with the Department of Transportation (DOT) to use the Docket Management Facility. Please see DOT's ''Privacy Act'' paragraph below.

Submitting comments: If you submit a comment, please include your name and address, identify the docket number for this notice (USCG–2005–22732) and give the reason for each comment. You may submit your comments by electronic means, mail, fax, or delivery to the Docket Management Facility at the address under **ADDRESSES**; but please submit your comments by only one means. If you submit them by mail or delivery, submit them in an unbound format, no larger than 8½ by 11 inches, suitable for copying and electronic filing. If you submit them by mail and would like to know that they reached the Facility, please enclose a stamped, self-addressed postcard or envelope. We will consider all comments received during the comment period.

Viewing comments and documents: To view comments, go to *http://dms.dot.gov* at any time, click on ''Simple Search,'' enter the last five digits of the docket number for this rulemaking, and click on ''Search.'' You may also visit the Docket Management Facility in room PL–401 on the Plaza level of the Nassif Building, 400 Seventh Street, SW., Washington, DC, between 9 a.m. and 5 p.m., Monday through Friday, except Federal holidays.

Privacy Act: Anyone can search the electronic form of all comments received into any of our dockets by the name of the individual submitting the comment (or signing the comment, if submitted on behalf of an association, business, labor union, *etc.*). You may review the Department of Transportation's Privacy Act Statement in the **Federal Register** published on April 11, 2000 (65 FR 19477), or you may visit *http://dms.dot.gov.*

Background and Purpose

On April 26, 2006, the Coast Guard published a notice (71 FR 24732) that announced voluntary interim measures for certain domestic vessels to account for increased passenger and vessel weight when determining the number of passengers permitted. The notice included a discussion on the typical restriction to ''reasonable operating conditions'' placed on the Certificate of Inspection (COI) of vessels that are designed only for operation on protected waters. Under the recommended voluntary measures for prudent operation for all small passenger vessels, the notice advised that reasonable operating conditions do not include conditions associated with a small craft advisory as well as other specific wind and wave conditions.

According to the National Weather Service (NWS), a small craft advisory is issued to alert small craft—generally vessels less than 65 feet in length—to sustained (more than 2 hours) hazardous weather or sea conditions that may be either present or forecasted. Upon learning of such an advisory, the NWS urges mariners to immediately determine the reason and to monitor the latest marine broadcast. *See http://www.weather.gov/glossary.*

The April notice also discussed increased passenger weight and identified the means by which the Coast Guard typically evaluates a small passenger vessel's stability.

This notice updates the voluntary measures for prudent operation published in the **Federal Register** on April 26, 2006, by clarifying guidance in the previous notice on reasonable operating conditions and the vessels to which that guidance applies.

The Coast Guard received numerous comments from the public in response to the April 26, 2006, notice.

Advisory Actions

Updated Voluntary Measures for Prudent Operation: All Small Passenger Vessels

The recommendation given in the April 26, 2006, notice to owners and operators of all small passenger vessels certificated only for operation on protected waters is amended as follows to further clarify ''reasonable operating conditions'':

(1) For passenger pontoon vessels, voluntarily operate in ''reasonable operating conditions,'' which do not include:

- Wind gusts over 30 knots (35 miles per hour);
- Waves over two feet;
- Sustained winds over 18 knots (21 miles per hour); or
- Conditions associated with a small craft advisory.

(2) For other small passenger, non-sailing vessels certificated to operate only on protected waters and that are less than 65 feet, give special consideration to the ''reasonable operating conditions'' as set forth in item (1) above while complying with the requirements of 46 CFR 185.304 or 122.304.

The Coast Guard expects that small passenger vessel owners and operators are aware of and follow the guidelines presented in the April 26, 2006 notice as supplemented by this notice. The Coast Guard is in the process of more formally addressing stability issues caused by increases in passenger and vessel weight for all domestic vessels.

Dated: October 25, 2006.

C.E. Bone,

Rear Admiral, U.S. Coast Guard, Assistant Commandant for Prevention.

[FR Doc. E6–18334 Filed 11–1–06; 8:45 am]

BILLING CODE 4910–15–P

DEPARTMENT OF HOMELAND SECURITY

Transportation Security Administration

Intent To Request Renewal From OMB of One Current Public Collection of Information: Aircraft Operator Security

AGENCY: Transportation Security Administration, DHS.

ACTION: Notice.

SUMMARY: The Transportation Security Administration (TSA) invites public comment on one currently approved information collection requirement abstracted below that we will submit to the Office of Management and Budget (OMB) for renewal in compliance with the Paperwork Reduction Act.

DATES: Send your comments by January 2, 2007.

ADDRESSES: Comments may be mailed or delivered to Katrina Kletzly, Attorney-Advisor, Office of the Chief Counsel, TSA–2, Transportation Security Administration, 601 South 12th Street, Arlington, VA 22202–4220.

FOR FURTHER INFORMATION CONTACT: Katrina Kletzly at the above address, or by telephone (571) 227–1995 or facsimile (571) 227–1381.

SUPPLEMENTARY INFORMATION:

Comments Invited

In accordance with the Paperwork Reduction Act of 1995 (44 U.S.C. 3501 et seq.), an agency may not conduct or sponsor, and a person is not required to respond to, a collection of information unless it displays a valid OMB control number. Therefore, in preparation for OMB review and approval of the following information collection, TSA is soliciting comments to—

(1) Evaluate whether the proposed information requirement is necessary for the proper performance of the functions of the agency, including whether the information will have practical utility;

(2) Evaluate the accuracy of the agency's estimate of the burden;

(3) Enhance the quality, utility, and clarity of the information to be collected; and

(4) Minimize the burden of the collection of information on those who are to respond, including using appropriate automated, electronic, mechanical, or other technological collection techniques or other forms of information technology.

Information Collection Requirement

TSA is seeking to renew its OMB control number, 1652–0003, Aircraft Operator Security. TSA has implemented aircraft operator security standards at 49 CFR part 1544, which requires each aircraft operator to adopt and implement a security program. As part of these security programs, aircraft operators are required to maintain and update, as necessary, records of compliance with the security program provisions outlined in part 1544. This regulation also requires aircraft operators to make their security programs and associated records available for inspection by TSA to ensure security, safety, and regulatory compliance. Under this regulation, aircraft operators must ensure flightcrew members and employees with unescorted access authority or who perform screening functions submit to a criminal history records check (CHRC); to conduct the CHRC, these individuals must provide identifying information, including fingerprints. The collection requirements associated with aircraft operator security programs remain critical in the aftermath of the terrorist attacks of September 11, 2001. The current estimated annual reporting burden for an estimated 80 respondent air carriers is 41,600 hours.

Issued in Arlington, Virginia, on October 27, 2006.

Peter Pietra,

Director of Privacy Policy and Compliance.

[FR Doc. E6–18485 Filed 11–1–06; 8:45 am]

BILLING CODE 9110–05–P

DEPARTMENT OF HOUSING AND URBAN DEVELOPMENT

[Docket No. FR–5041–N–43]

Notice of Proposed Information Collection: Comment Request; Application and Re-Certification Packages for Approval of Nonprofit Organizations in FHA Activities

AGENCY: Office of the Assistant Secretary for Housing—Federal Housing Commissioner, HUD.

ACTION: Notice.

SUMMARY: The proposed information collection requirement described below will be submitted to the Office of Management and Budget (OMB) for review, as required by the Paperwork Reduction Act. The Department is soliciting public comments on the subject proposal.

DATES: *Comments Due Date:* January 2, 2007.

ADDRESSES: Interested persons are invited to submit comments regarding this proposal. Comments should refer to the proposal by name and/or OMB Control Number and should be sent to: Lillian Deitzer, Reports Management Officer, Department of Housing and Urban Development, 451 7th Street, SW., L'Enfant Plaza Building, Room 8003, Washington, DC 20410 or *Lillian_Deitzer@hud.gov.*

FOR FURTHER INFORMATION CONTACT: Margaret Burns, Director, Office of Single Family Program Development, Department of Housing and Urban Development, 451 7th Street, SW., Washington, DC 20410, telephone (202) 708–2121 (this is not a toll free number) for copies of the proposed forms and other available information.

SUPPLEMENTARY INFORMATION: The Department is submitting the proposed information collection to OMB for review, as required by the Paperwork Reduction Act of 1995 (44 U.S.C. Chapter 35, as amended).

This Notice is soliciting comments from members of the public and affected agencies concerning the proposed collection of information to: (1) Evaluate whether the proposed collection is necessary for the proper performance of the functions of the agency, including whether the information will have practical utility; (2) Evaluate the accuracy of the agency's estimate of the burden of the proposed collection of information; (3) Enhance the quality, utility, and clarity of the information to be collected; and (4) Minimize the burden of the collection of information on those who are to respond; including the use of appropriate automated collection techniques or other forms of information technology, e.g., permitting electronic submission of responses.

This Notice also lists the following information:

Title of Proposal: Application and Re-certification Packages for Approval of Nonprofit Organizations for FHA Activities.

OMB Control Number, if applicable: 2502–0540.

Description of the need for the information and proposed use: The information collection is essential to the Department's mission to expand homeownership opportunities and strengthen neighborhoods and communities by standardizing the process throughout the country. The information that nonprofit organizations must submit to be eligible to participate as a mortgagor in HUD's single-family housing programs is in the form of an application, re-certification, or other reporting criteria. Nonprofit organizations are viewed as significant partners in rehabilitating and reselling residential housing to low- and moderate-income families, particularly in the nation's urban centers. Each nonprofit organization seeking to become approved as a mortgagor must submit a completed Application Package for Nonprofit Agency Approval and an Affordable Housing Plan—Format for Narrative to the appropriate HUD Homeownership Center (HOC). The Affordable Housing Plan—Format for Narrative details the nonprofit organization's plan to develop successful homeownership opportunities for low- and moderate-income persons. Nonprofit agencies applying for approval to provide secondary financing only do not need to include an Affordable Housing Plan in their submission.

Approvals granted to nonprofit applicants are for a period of two years. An approval letter will be issued setting

forth the activities for which the nonprofit was approved to perform, and any conditions associated with the approval. Approvals granted by one HOC would be recognized and accepted by all others, with the exception of the affordable housing plan. The affordable housing plan must be approved by each HOC having jurisdiction over the areas in which the nonprofit agency wishes to do business. Nonprofit agencies must be re-certified by FHA every two years. Re-certification includes an updating of the nonprofit's activites. FHA has also placed a limitation on the number of 203(k) FHA insured mortgages a nonprofit may have at one time in order to ensure that nonprofit agencies do not overextend their financial and management capabilities. Generally, a nonprofit agency will be prohibited from borrowing under the 203(k) program if the agency has 10 or more incomplete 203(k) developments at one time. This limitation may be waived based upon an exceptional performance record.

Agency form numbers, if applicable: None.

Estimation of the total numbers of hours needed to prepare the information collection including number of respondents, frequency of response, and hours of response: The number of respondents are estimated to be 583 generating approximately 583 annual responses; the frequency of response is annually, biennially, and on occasion, the estimated time needed to prepare the responses varies from 3 hours to 24 hours; and the total estimated annual burden hours are 6,156.

Status of the proposed information collection: Extension of a currently approved collection.

Authority: The Paperwork Reduction Act of 1995, 44 U.S.C., Chapter 35, as amended.

Dated: October 26, 2006.

Frank L. Davis,

General Deputy Assistant Secretary for Housing—Deputy Federal Housing Commissioner.

[FR Doc. E6–18433 Filed 11–1–06; 8:45 am]

BILLING CODE 4210–67–P

DEPARTMENT OF HOUSING AND URBAN DEVELOPMENT

[Docket No. FR–5041–N–42]

Notice of Proposed Information Collection: Comment Request; HUD-Owned Real Estate—Good Neighbor Next Door Sales Program

AGENCY: Office of the Assistant Secretary for Housing—Federal Housing Commissioner, HUD.

ACTION: Notice.

SUMMARY: The proposed information collection requirement described below will be submitted to the Office of Management and Budget (OMB) for review, as required by the Paperwork Reduction Act. The Department is soliciting public comments on the subject proposal.

DATES: *Comments Due Date:* January 2, 2007.

ADDRESSES: Interested persons are invited to submit comments regarding this proposal. Comments should refer to the proposal by name and/or OMB Control Number and should be sent to: Lillian Deitzer, Departmental Reports Management Officer, Department of Housing and Urban Development, 451 7th Street, SW., Washington, DC 20410 or *Lillian_L._ Deitzer@hud.gov.*

FOR FURTHER INFORMATION CONTACT: Laurie Maggiano, Acting Director, Office of Single Family Asset Management, Department of Housing and Urban Development, 451 7th Street, SW., Washington, DC 20410, telephone (202) 708–1672 (this is not a toll free number) for copies of the proposed forms and other available information.

SUPPLEMENTARY INFORMATION: The Department is submitting the proposed information collection to OMB for review, as required by the Paperwork Reduction Act of 1995 (44 U.S.C. Chapter 35, as amended).

This Notice is soliciting comments from members of the public and affected agencies concerning the proposed collection of information to: (1) Evaluate whether the proposed collection is necessary for the proper performance of the functions of the agency, including whether the information will have practical utility; (2) Evaluate the accuracy of the agency's estimate of the burden of the proposed collection of information; (3) Enhance the quality, utility, and clarity of the information to be collected; and (4) Minimize the burden of the collection of information on those who are to respond; including the use of appropriate automated collection techniques or other forms of information technology, e.g., permitting electronic submission of responses.

This Notice also lists the following information:

Title of Proposal: HUD-Owned Real Estate—Good Neighbor Next Door Sales Program.

OMB Control Number, if applicable: 2502–NEW.

Description of the need for the information and proposed use: This collection was formerly part of a collection titled Single Family Housing Property Disposition and Acquisition (Conveyance) of Mortgaged Properties. HUD published a **Federal Register** notice soliciting public comments on April 17, 2006 (Vol. 71, No. 73, pages 19746–19746). No comments were received. Since that publication, however, the information collection request for the Good Neighbor Next Door Sales Program has been disaggregated. This revision now presents only documents related to the Good Neighbor Next Door Sales Program.

Agency form numbers, if applicable: HUD–9548–A, HUD–9549, HUD 9549–A, HUD 9549–B, HUD 9549–C, HUD 9549–D, 9549–E.

Estimation of the total numbers of hours needed to prepare the information collection including number of respondents, frequency of response, and hours of response: The estimated number of burden hours needed to prepare the information collection is 1,249 hours; the number of respondents is approximately 13,136, generating approximately 20,282 annual responses; the frequency of response is ''on occasion''; and the estimated time needed to prepare the response varies from 2 minutes to 30 minutes per response.

Status of the proposed information collection: This is a request for a new collection to disaggregate only those information collection requirements of the Good Neighbor Next Door Sales Program.

Authority: The Paperwork Reduction Act of 1995, 44 U.S.C., Chapter 35, as amended.

Dated: October 26, 2006.

Frank L. Davis,

General Deputy Assistant Secretary for Housing—Deputy Federal Housing Commissioner.

[FR Doc. E6–18434 Filed 11–1–06; 8:45 am]

BILLING CODE 4210–67–P

DEPARTMENT OF HOUSING AND URBAN DEVELOPMENT

[Docket No. FR–5041–N–41]

Notice of Proposed Information Collection: Comment Request; HUD-Owned Real Estate—Dollar Home Sales Program

AGENCY: Office of the Assistant Secretary for Housing—Federal Housing Commissioner, HUD.

ACTION: Notice.

SUMMARY: The proposed information collection requirement described below will be submitted to the Office of Management and Budget (OMB) for

review, as required by the Paperwork Reduction Act. The Department is soliciting public comments on the subject proposal.

DATES: *Comments Due Date:* January 2, 2007.

ADDRESSES: Interested persons are invited to submit comments regarding this proposal. Comments should refer to the proposal by name and/or OMB Control Number and should be sent to: Lillian Deitzer, Departmental Reports Management Officer, Department of Housing and Urban Development, 451 7th Street, SW., Washington, DC 20410 or *Lillian_L._ Deitzer@hud.gov.*

FOR FURTHER INFORMATION CONTACT: Laurie Maggiano, Acting Director, Office of Single Family Asset Management, Department of Housing and Urban Development, 451 7th Street, SW., Washington, DC 20410, telephone (202) 708–1672 (this is not a toll free number) for copies of the proposed forms and other available information.

SUPPLEMENTARY INFORMATION: The Department is submitting the proposed information collection to OMB for review, as required by the Paperwork Reduction Act of 1995 (44 U.S.C. Chapter 35, as amended).

This Notice is soliciting comments from members of the public and affected agencies concerning the proposed collection of information to: (1) Evaluate whether the proposed collection is necessary for the proper performance of the functions of the agency, including whether the information will have practical utility; (2) Evaluate the accuracy of the agency's estimate of the burden of the proposed collection of information; (3) Enhance the quality, utility, and clarity of the information to be collected; and (4) Minimize the burden of the collection of information on those who are to respond; including the use of appropriate automated collection techniques or other forms of information technology, e.g., permitting electronic submission of responses.

This Notice also lists the following information:

Title of Proposal: HUD-Owned Real Estate—Dollar Home Sales Program.

OMB Control Number, if applicable: 2502–NEW.

Description of the need for the information and proposed use: This collection was formerly part of a collection titled Single Family Housing Property Disposition and Acquisition (Conveyance) of Mortgaged Properties. HUD published a **Federal Register** notice soliciting public comments on April 17, 2006 (Vol. 71, No. 73, pages 19746–19746). No comments were received. Since that publication, however, the information collection request for the Dollar Home Sales Program has been disaggregated. This revision now presents only documents related to the Dollar Home Sales Program. Among the information collections are a local government's notification to HUD of disposition strategies and public purpose goals; affirmation that all profits from re-sales of these Dollar Homes will go to support local housing/community development initiatives; identification of specific programs or uses any profits will support; identification of an agency of government to act as the local government's agent to purchase Dollar Homes; recordkeeping; and an annual report to HUD.

Agency form numbers, if applicable: None.

Estimation of the total numbers of hours needed to prepare the information collection including number of respondents, frequency of response, and hours of response: The estimated number of burden hours needed to prepare the information collection is 688 hours; the number of respondents is approximately 110, generating approximately 825 annual responses; the frequency of response is ''on occasion'' and annually; and the estimated time needed to prepare the response varies from 30 minutes to one hour per response.

Status of the proposed information collection: This is a request for a new collection to disaggregate only those information collection requirements of the Dollar Home Sales Program.

Authority: The Paperwork Reduction Act of 1995, 44 U.S.C., Chapter 35, as amended.

Dated: October 26, 2006.

Frank L. Davis,

General Deputy Assistant Secretary for Housing—Deputy Federal Housing Commissioner.

[FR Doc. E6–18435 Filed 11–1–06; 8:45 am]

BILLING CODE 4210–67–P

DEPARTMENT OF HOUSING AND URBAN DEVELOPMENT

[Docket No. FR–5041–N–40]

Notice of Proposed Information Collection: Comment Request; HUD-Owned Real Estate—Sales Contract and Addendums

AGENCY: Office of the Assistant Secretary for Housing—Federal Housing. Commissioner, HUD.

ACTION: Notice.

SUMMARY: The proposed information collection requirement described below will be submitted to the Office of Management and Budget (OMB) for review, as required by the Paperwork Reduction Act. The Department is soliciting public comments on the subject proposal.

DATES: *Comments Due Date:* January 2, 2007.

ADDRESSES: Interested persons are invited to submit comments regarding this proposal. Comments should refer to the proposal by name and/or OMB Control Number and should be sent to: Lillian Deitzer, Departmental Reports Management Officer, Department of Housing and Urban Development, 451 7th Street, SW., Washington, DC 20410 or *Lillian_L._Deitzer@hud.gov.*

FOR FURTHER INFORMATION CONTACT: Laurie Maggiano, Acting Director, Office of Single Family Asset Management, Department of Housing and Urban Development, 451 7th Street, SW., Washington, DC 20410, telephone (202) 708–1672 (this is not a toll free number) for copies of the proposed forms and other available information.

SUPPLEMENTARY INFORMATION: The Department is submitting the proposed information collection to OMB for review, as required by the Paperwork Reduction Act of 1995 (44 U.S.C. Chapter 35, as amended).

This Notice is soliciting comments from members of the public and affected agencies concerning the proposed collection of information to: (1) Evaluate whether the proposed collection is necessary for the proper performance of the functions of the agency, including whether the information will have practical utility; (2) Evaluate the accuracy of the agency's estimate of the burden of the proposed collection of information; (3) Enhance the quality, utility, and clarity of the information to be collected; and (4) Minimize the burden of the collection of information on those who are to respond; including the use of appropriate automated collection techniques or other forms of information technology, e.g., permitting electronic submission of responses.

This Notice also lists the following information:

Title of Proposal: HUD-Owned Real Estate—Sales Contract and Addendums.

OMB Control Number, if applicable: 2502–0306.

Description of the need for the information and proposed use: This collection was formerly titled Single Family Housing Property Disposition and Acquisition (Conveyance) of Mortgaged Properties. HUD published a **Federal Register** notice soliciting public comments on April 17, 2006 (Vol. 71, No. 73, pages 19746–19746). No

comments were received. Since that publication, however, the information collection request has been disaggregated into three smaller requests: one for the Good Neighbor Next Door Program, one for the Dollar Home Sales Program, and this request. This revision now presents only documents related to the Sales Contract and related addendums. Among the changes are a revised Form HUD–9548, Sales Contract, which brings the form into conformity with current property disposition program practices, a revised HUD 9548–B, Discount Sales Addendum, used for Sales to Nonprofit Organization and Governmental Entities (formerly the Land Use Restriction Addendum), and other addendums relating to lead-based paint. The Sales Contract and related addendums are used as binding contracts between purchasers and HUD and are necessary for the proper disposition of HUD-owned properties.

Agency form numbers, if applicable: HUD–9516–A, HUD–9519, HUD–9519–A, HUD–9544, HUD–9548, HUD–9548–B, HUD–9548–C, HUD–9548–D, HUD–9548–E, HUD–9548–F, HUD–9548–G, HUD–9549–H, HUD–9545–Y, and HUD–9545–Z.

Estimation of the total number of hours needed to prepare the information collection including number of respondents, frequency of response, and hours of response: The estimated number of burden hours needed to prepare the information collection is 68,950 hours; the number of respondents is approximately 13,137, generating approximately 165,775 annual responses; the frequency of response is ''on occasion''; and the estimated time needed to prepare the response varies from 6 minutes to 30 minutes per response.

Status of the proposed information collection: This is a revision of currently approved collection. The revision is necessary to disaggregate information collection related to the Good Neighbor Next Door Program and the Dollar Home Sales Program.

Authority: The Paperwork Reduction Act of 1995, 44 U.S.C., Chapter 35, as amended.

Dated: October 26, 2006.

Frank L. Davis,

General Deputy Assistant Secretary for Housing—Deputy Federal Housing Commissioner.

[FR Doc. E6–18436 Filed 11–1–06; 8:45 am]

BILLING CODE 4210–27–P

DEPARTMENT OF HOUSING AND URBAN DEVELOPMENT

[Docket No. FR–5037–N–82]

Notice of Submission of Proposed Information Collection to OMB; Request for Occupied Conveyance

AGENCY: Office of the Chief Information Officer, HUD.

ACTION: Notice.

SUMMARY: The proposed information collection requirement described below has been submitted to the Office of Management and Budget (OMB) for review, as required by the Paperwork Reduction Act. The Department is soliciting public comments on the subject proposal.

Prior to acquisition, the mortgagee/loan servicer must provide a notice of acquisition and form HUD–9539 to any occupant of the property. The occupants may submit the form, which provides information on occupation, income, and obligations to HUD requesting to remain in the property. HUD uses the information to determine whether the occupant qualifies, to maintain rental accounts, and to facilitate collection of overdue rents. HUD may provide pertinent information to a local real estate broker who manages the property. Occupants who are accepted must execute a month-to-month lease.

DATES: *Comments Due Date:* December 4, 2006.

ADDRESSES: Interested persons are invited to submit comments regarding this proposal. Comments should refer to the proposal by name and/or OMB approval Number (2502–0268) and should be sent to: HUD Desk Officer, Office of Management and Budget, New Executive Office Building, Washington, DC 20503; fax: 202–395–6974.

FOR FURTHER INFORMATION CONTACT: Lillian Deitzer, Departmental Reports Management Officer, QDAM, Department of Housing and Urban Development, 451 Seventh Street, SW., Washington, DC 20410; e-mail *Lillian_L._Deitzer@HUD.gov* or telephone (202) 708–2374. This is not a toll-free number. Copies of available documents submitted to OMB may be obtained from Ms. Deitzer or from HUD's Web site at *http://hlannwp031.hud.gov/po/i/icbts/collectionsearch.cfm.*

SUPPLEMENTARY INFORMATION: This notice informs the public that the Department of Housing and Urban Development has submitted to OMB a request for approval of the information collection described below. This notice is soliciting comments from members of the public and affecting agencies concerning the proposed collection of information to: (1) Evaluate whether the proposed collection of information is necessary for the proper performance of the functions of the agency, including whether the information will have practical utility; (2) Evaluate the accuracy of the agency's estimate of the burden of the proposed collection of information; (3) Enhance the quality, utility, and clarity of the information to be collected; and (4) Minimize the burden of the collection of information on those who are to respond; including through the use of appropriate automated collection techniques or other forms of information technology, e.g., permitting electronic submission of responses.

This notice also lists the following information:

Title of Proposal: Request for Occupied Conveyance.

OMB Approval Number: 2502–0268.

Form Numbers: HUD–9539.

Description of the Need for the Information and Its Proposed Use: Prior to acquisition, the mortgagee/loan servicer must provide a notice of acquisition and form HUD–9539 to any occupant of the property. The occupants may submit the form, which provides information on occupation, income, and obligations to HUD requesting to remain in the property. HUD uses the information to determine whether the occupant qualifies, to maintain rental accounts, and to facilitate collection of overdue rents. HUD may provide pertinent information to a local real estate broker who manages the property. Occupants who are accepted must execute a month-to-month lease.

Frequency of Submission: On occasion.

	Number of respondents	Annual responses	×	Hours per response	=	Burden hours
Reporting Burden	10,015	7.5		0.28		21,125

Total Estimated Burden Hours: 21,125.

Status: Extension of a currently approved collection.

Authority: Section 3507 of the Paperwork Reduction Act of 1995, 44 U.S.C. 35, as amended.

Dated: October 26, 2006.

Lillian L. Deitzer,

Departmental Paperwork Reduction Act Officer, Office of the Chief Information Officer.

[FR Doc. E6–18438 Filed 11–1–06; 8:45 am]

BILLING CODE 4210–67–P

DEPARTMENT OF THE INTERIOR

Office of the Secretary

Delaware & Lehigh National Heritage Corridor Commission Meeting

AGENCY: Department of Interior, Office of the Secretary

ACTION: Notice of meeting.

SUMMARY: This notice announces an upcoming meeting of the Delaware & Lehigh National Heritage Corridor Commission. Notice of this meeting is required under the Federal Advisory Committee Act (Pub. L. 92–463).

MEETING DATE AND TIME: Thursday, November 9, 2006—1:30 p.m. to 4 p.m.

ADDRESSES: Emrick Technology Center, 2750 Hugh Moore Park Road, Easton, PA 18042.

The agenda for the meeting will focus on implementation of the Management Action Plan for the Delaware & Lehigh National Heritage Corridor and State Heritage Park. The Commission was established to assist the Commonwealth of Pennsylvania and its political subdivisions in planning and implementing an integrated strategy for protecting and promoting cultural, historic and natural resources. The Commission reports to the Secretary of the Interior and to Congress.

SUPPLEMENTARY INFORMATION: The Delaware & Lehigh National Heritage Corridor Commission was established by Public Law 100–692, November 18, 1988 and extended through Public Law 105–355, November 13, 1998.

FOR FURTHER INFORMATION CONTACT: C. Allen Sachse, Executive Director, Delaware & Lehigh National Heritage Corridor Commission, 2750 Hugh Moore Park Road, Easton PA 18042, (610) 923–3548.

Dated: October 27, 2006.

C. Allen Sachse,

Executive Director, Delaware & Lehigh National Heritage Corridor Commission.

[FR Doc. 06–9015 Filed 11–1–06; 8:45 am]

BILLING CODE 6820–PE–M

DEPARTMENT OF THE INTERIOR

Fish and Wildlife Service

Record of Decision for the Final Comprehensive Conservation Plan and Environmental Impact Statement for the San Diego Bay National Wildlife Refuge (Sweetwater Marsh and South San Diego Bay Units)

AGENCY: Fish and Wildlife Service, Interior.

ACTION: Notice of availability of record of decision.

SUMMARY: The U.S. Fish and Wildlife Service (Service) announces the decision and availability of the Record of Decision (ROD) for the Final Comprehensive Conservation Plan and Environmental Impact Statement (Final CCP/EIS) for the Sweetwater Marsh and South San Diego Bay Units of the San Diego Bay National Wildlife Refuge (NWR or Refuge). A thorough analysis of the environmental, social, and economic considerations was completed and presented in the Final CCP/EIS. The Final CCP/EIS was released to the public and a Notice of Availability was published in the **Federal Register** on August 25, 2006. The ROD documents the Service's decision to adopt and implement Alternative C (Implement Habitat Enhancement and Restoration and Improve Existing Public Uses) for the Sweetwater Marsh Unit and Alternative D (Expand Habitat Management, Enhance Nesting Opportunities, Maximize Habitat Restoration, and Provide Additional Public Use Opportunities) for the South San Diego Bay Unit.

DATES: The ROD was signed by the Manager, California/Nevada Operations, U.S. Fish and Wildlife Service on September 29, 2006.

ADDRESSES: A copy of the ROD may be obtained by writing to: Victoria Touchstone, Refuge Planner, San Diego National Wildlife Refuge Complex, 6010 Hidden Valley Road, Carlsbad, CA 92011 or by e-mailing *Victoria_Touchstone@fws.gov.* A copy of the Final CCP/EIS and associated Appendices is available at the following Web site address: *http://sandiegorefuges.fws.gov.*

FOR FURTHER INFORMATION CONTACT: Victoria Touchstone, Refuge Planner, at the above street and e-mail address, or via telephone at (760) 431–9440 extension 349, or by fax at (760) 930–0256.

SUPPLEMENTARY INFORMATION: The San Diego Bay NWR, which consists of the Sweetwater Marsh and South San Diego Bay Units, is located approximately 10 miles north of the United States Mexico border in southwestern San Diego County, California. Collectively, the two Refuge Units encompass approximately 2,620 acres of land and water in and around the south end of San Diego Bay. The coastal wetlands protected within this Refuge annually provide essential foraging and resting habitat for tens of thousands of migratory shorebirds and wintering waterfowl traveling along the Pacific Flyway. The South San Diego Bay Unit also provides nesting habitat for a variety of colonial nesting seabirds.

The Sweetwater Marsh Unit was established as a National Wildlife Refuge in 1988. Encompassing approximately 316 acres, this Refuge was established to protect federally listed endangered and threatened species. The South San Diego Bay Unit was established in 1999 as a unit of the San Diego National Wildlife Refuge for the purpose of protecting, managing, and restoring habitats for federally listed endangered and threatened species and migratory birds. The Service currently manages approximately 2,300 acres of the 3,940 acres included within the Unit's approved acquisition boundary. The majority of this management area is leased to the Service by the California State Lands Commission.

The Final CCP will provide guidance for how the refuge, its resources, and compatible public uses should be managed over the next 15 years. Three alternatives for the Sweetwater Marsh Unit and four alternatives for the South San Diego Bay Unit, along with the consequences of implementing each alternative, were described in detail in the Draft and Final CCP/EIS. The Draft CCP/EIS was distributed for public review and comment on July 22, 2005 and comments were accepted through September 19, 2005. The Service received 38 written comment letters and four individuals presented verbal comments at a public meeting held on August 30, 2005. All substantive issues raised in these comments were addressed through changes incorporated into the Final CCP/EIS and/or through responses to the comments, which are included in Appendix P, Responses to Comments, of the Final CCP/EIS.

The ROD for the San Diego Bay NWR Final CCP/EIS has been prepared by the Service in compliance with the National

Environmental Policy Act of 1969 (NEPA), as amended. It documents the decision of the Service, based on the information contained in the San Diego Bay NWR Final CCP/EIS and the entire Administrative Record. The Service adopted and plans to implement Alternative C (Implement Habitat Enhancement and Restoration and Improve Existing Public Uses) for the Sweetwater Marsh Unit and Alternative D (Expand Habitat Management, Enhance Nesting Opportunities, Maximize Habitat Restoration, and Provide Additional Public Use Opportunities) for the South San Diego Bay Unit. These alternatives have been identified by the Service as the alternatives that would best achieve refuge purposes and contribute toward the mission of the NWRS, consistent with sound principles of fish and wildlife science, conservation, legal mandates, and Service policies.

The selected alternatives recognize the need to provide high quality habitat for the Refuge's federally listed species, while also maintaining, and in some cases enhancing, the habitats needed to support the overall biological diversity of the Refuge. The selected alternatives also include expanded opportunities for compatible public use including wildlife observation, environmental education, and interpretation; provisions to protect cultural resources; recommendations for addressing existing contaminant issues; and proposals for establishing partnerships to address issues such as water quality, the accumulation of discarded fishing line around the bay, and stewardship of Refuge resources.

Alternative C for the Sweetwater Marsh Unit would improve habitat quality and restore intertidal and upland habitats to support six federally listed species, along with the Refuge's other plant and animal resources. The existing trail system on Gunpowder Point would be redesigned and new interpretive elements would be provided to better complement the existing environmental education programs supported by the Refuge.

Alternative D for the South San Diego Bay Unit would enhance nesting opportunities in and around the salt ponds for the California least tern, western snowy plover, and various other colonial seabirds; restore to native coastal habitats the former agricultural lands in the Otay River floodplain; restore 650 acres of commercial solar salt ponds to tidal influence to support intertidal mudflat and coastal salt marsh habitats; and manage the water and salinity levels in an additional 275 acres of salt ponds. Opportunities for wildlife observation, photography, and environmental interpretation would be expanded; a pedestrian pathway would be constructed along the southern end of the Refuge to improve wildlife observation opportunities for Refuge visitors; and the other public uses (i.e., fishing, environmental education, and boating) currently provided on the Refuge would be maintained.

The Service considered the environmental and relevant concerns presented by agencies, organizations, and individuals and believes that implementing Alternative C for the Sweetwater Marsh Unit and Alternative D for the South San Diego Bay Unit is the best way to achieve the vision and goals for the Refuge. The selected alternatives are also the most consistent with the purposes of the Refuge, the mission of the NWRS, the recovery actions proposed for those federally listed species that are supported by the Refuge, and the bird conservation recommendations relevant to this part of the Pacific Flyway. These alternatives recognize the need to restore habitat essential to the recovery of listed species, while also protecting those habitats and conditions that currently support a diverse and abundant array of migratory birds. The selected alternatives also balance the need to protect habitat with the need to provide the public with the opportunity to experience and enjoy the resources being protected.

Dated: October 18, 2006.

Steve Thompson,

Manager, California/Nevada Operations, Sacramento, California.

[FR Doc. E6–18373 Filed 11–1–06; 8:45 am]

BILLING CODE 4310–55–P

DEPARTMENT OF THE INTERIOR

Fish and Wildlife Service

Final Environmental Impact Statement and Comprehensive Conservation Plan for Upper Mississippi River National Wildlife and Fish Refuge in Illinois, Iowa, Minnesota, and Wisconsin

AGENCY: Fish and Wildlife Service, Interior.

ACTION: Notice of availability of record of decision.

SUMMARY: We, the U.S. Fish and Wildlife Service, announce our decision and the availability of the Record of Decision (ROD) for the Final Environmental Impact Statement (EIS) and Comprehensive Conservation Plan (CCP) for Upper Mississippi River National Wildlife and Fish Refuge in accordance with National Environmental Policy Act requirements (NEPA).

ADDRESSES: The ROD and Final EIS/CCP may be viewed at Upper Mississippi River National Wildlife and Fish Refuge Headquarters or at Refuge District Offices in Winona, Minnesota; La Crosse, Wisconsin; McGregor, Iowa; and Savanna, Illinois. You may obtain a copy of the ROD on the planning Web site at *http://www.fws.gov/midwest/planning/uppermiss* or by writing to: U.S. Fish and Wildlife Service, Division of Conservation Planning, Bishop Henry Whipple Federal Building, 1 Federal Drive, Fort Snelling, Minnesota 55111.

FOR FURTHER INFORMATION CONTACT: Don Hultman, (507) 452–4232.

SUPPLEMENTARY INFORMATION: We, the U.S. Fish and Wildlife Service, announce our decision and the availability of the Record of Decision (ROD) for the Final Environmental Impact Statement (EIS) and Comprehensive Conservation Plan (CCP) for Upper Mississippi River National Wildlife and Fish Refuge in accordance with NEPA requirements (40 CFR 1506.6(b)). We completed a thorough analysis of the environmental, social, and economic considerations, which we included in the Final EIS/CCP. We released the Final EIS/CCP to the public and a published a notice of availability in the **Federal Register** (71 FR 39125, July 11, 2006). The ROD documents the selection of Alternative E, the Preferred Alternative in the Final EIS/CCP, with one modification. The ROD was signed by the Regional Director, U.S. Fish and Wildlife Service, Midwest Region, on August 24, 2006.

The CCP for the Upper Mississippi River National Wildlife and Fish Refuge (Refuge) will guide the management and administration of the Refuge for the next 15 years. Alternative E, as described in the Final EIS, is the foundation for the CCP, with one modification. The modification designates 215 acres west of the Rieck's Lake area of Pool 4, in the area between Highway 35 and the railroad tracks, as a No Hunting Zone to avoid impacts to persons using the Buffalo River Access, access to the main river, and anglers desiring to fish in the area.

Four alternatives and their consequences were developed for the Draft EIS and CCP. A fifth alternative, Alternative E, was developed based on extensive public input and comment, and was released as a Supplement to the Draft EIS (71 FR 2561, January 17, 2006).

Alternative A—No Action or Current Direction. Continue current level of

effort on fish and wildlife and habitat management. Public use programs would remain virtually unchanged.

Alternative B—Wildlife Focus. Increase level of effort on fish and wildlife and habitat management. Some public use opportunities and programs would remain the same, others reduced in favor of wildlife and habitat protection.

Alternative C—Public Use Focus. Increase level of effort on public use opportunities and programs. Continue current level of effort on many fish and wildlife and habitat management activities, and decrease effort on others in favor of public use.

Alternative D—Wildlife and Integrated Public Use Focus. Increase level of effort on fish and wildlife and habitat management. Take a more proactive approach to public use management to ensure a diversity of opportunities for a broad spectrum of users, both for wildlife-dependent uses and traditional and appropriate non-wildlife-dependent uses.

Alternative E—Modified Wildlife and Integrated Public Use Focus (Preferred Alternative). Increase level of effort on fish and wildlife and habitat management. Take a proactive but balanced approach to public use management to ensure a diversity of opportunities for a broad spectrum of users, both for wildlife-dependent uses and traditional and appropriate non-wildlife-dependent uses.

Elements common to all alternatives included interagency coordination, agency access to restricted areas, NEPA compliance for projects (42 U.S.C. 4371 *et seq.* and 40 CFR 1500–1508), protection of threatened and endangered species and cultural resources, fire management, a continuation of general water-based recreation, mosquito management in the event of a health emergency, fish and wildlife disease control, and the fostering of volunteers and friends groups.

The Service's Basis for Decision: Based on a review of the environmental consequences of each alternative, we judged Alternative E to be the environmentally preferable alternative. Although all alternatives have positive physical and biological environmental consequences, Alternatives D and E also address a variety of social, economic, and cultural issues. Alternative E is the most positive in terms of addressing human environmental issues, because it reflects input received during scores of public meetings and workshops, and through several thousand written comments. The Final EIS identified three broad needs: (1) Contribute to the Refuge System mission; (2) fulfill the purposes of the Refuge; and (3) achieve Refuge goals for landscape conservation, environmental health, wildlife and habitat health, and recreation. Alternative E meets these needs through the most balanced and integrated approach. Alternative E reflects substantive changes to earlier preferred alternatives. These changes were in response to agency review and comment, 30 public meetings and workshops on the draft documents, and more than 3,000 written comments. Alternative E in the Final EIS is the alternative most responsive to agency and public comment and suggestion. It identifies objectives and strategies for completing land acquisition, habitat improvements, water quality improvements, invasive species control, fish and wildlife monitoring, and forest management, and providing targeted resting and feeding areas for waterfowl and other wildlife. These measures will help ensure the biological health of the Refuge beyond the 15-year scope of the CCP. Alternative E also strikes a balance between the needs of fish and wildlife and needs of people for recreation through reasonable restrictions on a portion of the Refuge. This approach may prove more sustainable, both in terms of resource values and economic values, than the status quo, and help sustain the greatest diversity of opportunity for the greatest number of people. Alternative E reflects a large body of scientific and management knowledge and experience on the river environment and the needs of the system to improve and thrive. It reflects numerous studies and reports from the U.S. Geological Survey, States, interagency teams, and Refuge-specific monitoring and studies. Changes in public use programs reflect numerous studies on wildlife and human interaction and disturbance, and the latest thinking in recreation management. The Refuge Improvement Act of 1997 (Pub. L. 105–57) requires that all uses on a national wildlife refuge must be compatible with the purposes of the refuge and the mission of the Refuge System. Alternative E, with its various stipulations for certain uses, ensures that these uses remain compatible. All current recreational uses (*e.g.*, hunting, fishing, observation and photography, and interpretation and environmental education) and wildlife-dependent economic uses (*e.g.*, commercial fishing, guiding, fishing tournaments, and trapping) will continue, and opportunities will remain abundant in terms of the amount of land and water available and seasons of use. Adjustments in time, space, and period of use will help ensure the highest quality experience for the greatest number of users, and ensure each use remains compatible. Recreation is the main economic driver on the Refuge, and Alternative E will continue to have a positive economic impact since all current public use opportunities will continue, and are expected to grow, even though means, timing, and location of recreation will change in some areas to protect wildlife, habitat, and the recreation experience. In the long -term, providing for a greater diversity of recreational opportunities should strengthen local and regional economies. Alternative E identifies staffing needs tied to objectives and strategies to increase the capacity of the Refuge to meet its purpose and the Refuge System mission. Alternative E also addresses infrastructure needs for effective and efficient administration and management of the Refuge while serving the needs of the visiting public. Although differences of opinion will remain, Alternative E is the strongest alternative in terms of fostering cooperative conservation. Virtually every objective and associated strategy in Alternative E stresses a cooperative approach with the States, the U.S. Army Corps of Engineers, and the public.

Public Comments on Final EIS: During the 30-day waiting period, we received 50 written comments. With one exception, the comments did not raise any issues not addressed in the Final EIS, and the comments did not result in changes to the analysis of environmental consequences or affect our response to similar comments in the Final EIS. The exception was a comment requesting retention of the Waterfowl Hunting Closed Area near Rieck's Lake, Pool 4, due to its proximity to residences, school bus stop locations, and a marina. This comment provided new information and resulted in the modification to Alternative E, as noted above. All written comments received during the waiting period are available for review at the Refuge headquarters in Winona, Minnesota (*see* **ADDRESSES** Section).

Measures to Minimize Environmental Harm: We addressed public concerns, potential impacts, and measures and stipulations to mitigate impacts in various sections of the Final EIS. We made 17 major changes to Alternative E between the Draft and Final EIS to mitigate public and agency concerns. Since the focus of the CCP is the improvement of the Refuge environment, there is little mitigation for physical environmental impacts. Also, many objectives in the CCP are programmatic in nature and local

impacts unknown. Thus, we will identify mitigation for any project-specific impacts during detailed project planning and design. We prepared a biological assessment to address any impacts to federally-listed threatened or endangered species. The biological assessment concluded that implementation of Alternative E is not likely to appreciably reduce the survival and recovery of listed species. We also prepared compatibility determinations for all uses identified in Alternative E, and these determinations contain stipulations to avoid, minimize, or mitigate any environmental impacts from these uses and associated facilities. The Refuge Manager and District Managers will be responsible for ensuring that monitoring and stipulations identified in the CCP are completed or followed.

Dated: September 13, 2006.

Robyn Thorson,

Regional Director, U.S. Fish and Wildlife Service, Fort Snelling, Minnesota.

[FR Doc. E6–18470 Filed 11–1–06; 8:45 am]

BILLING CODE 4310–55–P

DEPARTMENT OF THE INTERIOR

Fish and Wildlife Service

Notice of Intent To Conduct Public Scoping and Prepare an Environmental Impact Statement Regarding the Coyote Springs Investments Multiple Species Habitat Conservation Plan, Lincoln County, NV

AGENCY: Fish and Wildlife Service, Interior.

ACTION: Notice of intent; reopening of public comment period.

SUMMARY: Pursuant to the National Environmental Policy Act (NEPA) (42 U.S.C. 4321, *et seq.*), the Fish and Wildlife Service (Service) as the lead agency, advises the public that we intend to gather information necessary to prepare an Environmental Impact Statement (EIS) regarding the proposed Coyote Springs Investment LLC (Applicant) Multiple Species Habitat Conservation Plan (MSHCP) and issuance of an incidental take permit (Permit) for endangered and threatened species in accordance with section 10(a)(1)(B) of the Endangered Species Act of 1973, as amended (Act). The Applicant proposes to develop a planned community in southern Lincoln County and implement conservation features (Project). The Applicant intends to request a Permit for incidental take of federally-listed threatened or endangered species, including desert tortoise (*gopherus agassizii*) as well as Evaluation List species. Evaluation List species include species that have been petitioned for listing; State-listed species; species that have been nominated for inclusion by technical specialists; and other species of concern that co-occur with federally listed species. The Service plans to refine the species list as a part of the scoping process. In accordance with the Act, the Applicant will prepare a MSHCP containing proposed measures to minimize and mitigate incidental take that could result from the Project.

The Service provides this notice to: (1) Announce the opening of an additional 30-day public scoping period; (2) correct inaccurate contact information provided in the previous notice (71 FR 530704, September 12, 2006); (3) describe the proposed action and possible alternatives; (4) advise other Federal and State agencies, affected tribes, and the public of our intent to prepare an EIS; (5) obtain suggestions and information on the scope of issues to be included in the EIS. The proposed action is approval of the MSHCP and issuance of the Permit.

DATES: Written comments from all interested parties must be received on or before December 4, 2006.

ADDRESSES: Comments and requests for information related to the preparation of the EIS should be sent to Robert D. Williams, Field Supervisor, Fish and Wildlife Service, Nevada Fish and Wildlife Office, 1340 Financial Boulevard, Suite 234, Reno, Nevada 89502; or fax 775–861–6301.

Comments and materials received will be available for public inspection, by appointment, during normal business hours at the above address.

FOR FURTHER INFORMATION CONTACT: Jeannie Stafford, Public Affairs Specialist, Nevada Fish and Wildlife Office, at 775–861–6300.

SUPPLEMENTARY INFORMATION: A Notice of Intent to prepare an EIS was published in the **Federal Register** for this project on December 4, 2001 (66 FR 63065). A second notice was published on September 12, 2006 (71 FR 53704) because the amount of land included in the proposed MSHCP was modified. The MSHCP described in the 2001 notice included privately-owned, developable lands, and leased land in Lincoln County and Clark County, Nevada. The proposed MSHCP described in this, and the September 12, 2006, notice include private, developable lands in Lincoln County only, and leased lands in both Lincoln and Clark Counties. This notice is being published to allow for an additional 30-day comment period and to correct inaccurate contact information provided in the September 12, 2006 notice. In that notice, an invalid e-mail address was provided as a way to submit comments. For the purposes of this reopening of the scoping period, please submit comments in writing to the contact identified in the **ADDRESSES** section.

The Applicant has initiated discussions with the Service regarding preparation of an MSHCP and issuance of a Permit for their activities, which include residential and commercial development, construction, and maintenance. The Applicant has also initiated discussions with the Bureau of Land Management (BLM) regarding land leases, and with the U.S. Army Corps of Engineers regarding project wetland permitting. Land leased and owned by the Applicant occupies most of the eastern portion of Coyote Springs Valley straddling the Pahranagat Wash and the Kane Springs Wash in Lincoln County. It consists of approximately 13,800 acres of land leased from the BLM in Lincoln and Clark Counties, and approximately 22,140 acres of developable private land in Lincoln County. The area is bordered by the Delamar Mountains to the north, the Meadow Valley Mountains to the east, and U.S. 93 to the west. The development area extends approximately 9 miles (14.48 kilometers) north of the Lincoln County/Clark County line. Leased land is bordered by SR 168 to the south in Clark County. Accordingly, BLM will be a cooperating agency for the environmental review. These lands are located in portions of Townships 11, 12, and 13 South and Ranges 63 and 64 East. The surrounding land is primarily owned and managed by the BLM and the Service. South of the development area, the Applicant's lands are being developed in Clark County and are not covered under this MSHCP.

Some of the Applicant's future activities have the potential to impact species subject to protection under the Act. Section 9 of the Act (16 U.S.C. 1538) and Federal regulations prohibit the ''take'' of a fish or wildlife species listed as endangered or threatened. Under the Act, the following activities are defined as take: to harass, harm, pursue, hunt, shoot, wound, kill, trap, capture or collect listed animal species, or to attempt to engage in such conduct (16 U.S.C. 1532). However, under section 10(a) of the Act, we may issue permits to authorize ''incidental take'' of listed species. ''Incidental take'' is defined by the ESA as take that is incidental to, and not the purpose of, carrying out an otherwise lawful activity. Regulations governing permits

for threatened species and endangered species are at 50 CFR 17.32 and 50 CFR 17.22, respectively. An applicant for a Permit under section 10 must prepare and submit to the Service for approval a Plan containing a multifaceted strategy for minimizing and mitigating all take associated with the proposed activities to the maximum extent practicable. The applicant must also ensure that adequate funding for the Plan will be provided.

The Service will conduct an environmental review of the MSHCP and prepare an EIS. ENTRIX has been selected as the lead consultant to prepare the EIS under the supervision of the Service, which will be responsible for the scope and content of the NEPA document. NEPA requires that Federal agencies conduct an environmental analysis of their proposed actions to determine if the actions may significantly affect the human environment. Under NEPA, a reasonable range of alternatives to proposed projects is developed and considered in the environmental review. Alternatives considered for analysis in an EIS may include: variations in the scope of proposed activities; variations in the location, amount, and types of conservation measures; variations in activity duration; or, a combination of these elements. In addition, the EIS will identify potentially significant direct, indirect, and cumulative impacts on biological resources, land use, air quality, water quality, water resources, socioeconomic conditions, and other environmental issues that could occur with implementation of the proposed action and alternatives. For all potentially significant impacts, the EIS identifies avoidance, minimization, and mitigation measures to reduce these impacts, where feasible, to a level below significance.

The EIS will consider the proposed action, no action, and a reasonable range of alternatives. A detailed description of the impacts of the proposed action and each alternative will be included in the EIS. The alternatives to be considered for analysis in the EIS may address combinations of covered species, different permit effective periods, or a combination of elements.

Written comments from interested parties are welcome to ensure that the issues of public concern related to the proposed action are identified. Comments and materials received will be available for public inspection, by appointment, during normal business hours at the office listed in the **ADDRESSES** section of this notice. Our practice is to make comments, including names, home addresses, home phone numbers, and email addresses of respondents, available for public review. Individual respondents may request that we withhold their names and /or homes addresses, etc., but if you wish us to consider withholding this information you must state this prominently at the beginning of your comments. In addition, you must present a rationale for withholding this information. This rationale must demonstrate that disclosure would constitute a clearly unwarranted invasion of privacy. Unsupported assertions will not meet this burden. In the absence of exceptional, documentable circumstances, this information will be released. We will always make submissions from organization or businesses, and from individuals identifying themselves as representatives of or officials of organizations or businesses, available for public inspection in their entirety.

The Service requests that comments be specific. In particular, the Service is requesting information regarding (1) potential direct, indirect, and cumulative impacts of implementation of the proposed action; (2) other possible alternatives that meet the purpose and need; (3) potential adaptive management and/or monitoring provisions; (4) existing environmental conditions in the area; (5) other plans or projects that might be relevant to this proposed project; and (6) potential minimization and mitigation efforts.

The environmental review of this project will be conducted in accordance with the requirements of the NEPA of 1969 as amended (42 U.S.C. 4321 *et seq.*), Council on the Environmental Quality Regulations (40 CFR parts 1500–1518), other applicable Federal laws and regulations, and applicable policies and procedures of the Service. This notice is being furnished in accordance with 40 CFR 1501.7 to obtain suggestions and information from other agencies and the public on the scope of issues and alternatives to be addressed in the EIS. It is estimated that the draft EIS will be available for public review during the first quarter of 2007.

Dated: October 27, 2006.

Ken McDermond,

Deputy Manager, California/Nevada Operations Office, Sacramento, California.

[FR Doc. E6–18463 Filed 11–1–06; 8:45 am]

BILLING CODE 4310–55–P

DEPARTMENT OF THE INTERIOR

Bureau of Land Management

[NV–020–2110–IW–F202]

Notice to the Public of Temporary Public Lands Closures and Prohibitions of Certain Activities on Public Lands Administered by the Bureau of Land Management, Winnemucca Field Office, Nevada

AGENCY: Bureau of Land Management, Interior.

ACTION: Notice of temporary closure.

SUMMARY: Notice is hereby given that certain lands located in northwestern Nevada are temporarily closed or restricted and certain activities are temporarily prohibited in and around an area near the city of Winnemucca known as Water Canyon and administered by the BLM Winnemucca Field Office in Humboldt County, Nevada.

DATES: September 1, 2006 through December 31, 2006, inclusive.

FOR FURTHER INFORMATION CONTACT: Dave Hays, Assistant Field Manager, Nonrenewable Resources, Winnemucca Field Office, Bureau of Land Management, 5100 E. Winnemucca Blvd., Winnemucca, NV 89445–2921, telephone: (775) 623–1500.

SUPPLEMENTARY INFORMATION: The specified closures, restrictions, and prohibitions are made in the interest of public and employee safety during the period of heavy construction equipment usage at and around the public lands in an area known as Water Canyon Recreation Area, Zone 1. The temporary closure is needed during the construction phase of the implementation of the ''Water Canyon Implementation Plan Amendment'' (Decision Record was signed 11/16/05). These lands are closed or restricted during the following times:

- September 1, 2006, through December 31, 2006 inclusive: Restricted entry by the public into Zone 1 of the Water Canyon Recreation Area during certain time periods as outlined in the sections below, to provide for safety of individuals.

Authority: 43 CFR 8364.1.

1. Public Closure Area: Within the following legally described locations:

Mount Diablo Meridian

T. 35 N., R. 38 E.,
Section 02, S½SW¼ portion inside barbed wire fence;
Section 11; NE¼ and N½NW¼ portion inside barbed wire fence;

Section 12, SW¼NW¼, N½SW¼, and NW¼ SE¼ portion inside barbed wire fence.

1.0 Between September 1, 2006 and December 31, 2006 Inclusive

1.1 Motorized Use

Motor vehicle use of any kind by the public is prohibited in Zone 1 of the Water Canyon Recreation Area. The following exceptions apply:

Any administrative use authorized by BLM.

Any authorized law enforcement or emergency personnel may enter as needed to perform their official duties.

1.2 Public Entry

Public entry of any persons or individuals is prohibited in Zone 1, during working hours from Monday through Friday. The following exceptions apply:

Any administrative use authorized by BLM.

Any authorized law enforcement or emergency personnel may enter as needed to perform their official duties.

1.3 Public Camping

Public camping is prohibited in Zone 1 during this period of construction.

Penalty: Any person failing to comply with the closure orders may be subject to imprisonment for not more than 12 months, or a fine in accordance with the applicable provisions of 18 U.S.C. 3571, or both.

Dated: August 2, 2006.

Gail G. Givens,

Field Manager.

[FR Doc. E6–18500 Filed 11–1–06; 8:45 am]

BILLING CODE 4310–HC–P

DEPARTMENT OF THE INTERIOR

Bureau of Land Management

[OR–026–1040–PH–021H: G6–0168]

Closure of Public Lands in Harney County, OR

AGENCY: Bureau of Land Management (BLM), Burns District, Hines, Oregon.

ACTION: Notice of Realty Action.

SUMMARY: Pursuant to 43 CFR 8364.1, this closure order is hereby given that public lands, described herein and managed by the BLM, located in Harney County, Oregon, are permanently closed to public use for the purpose of discharging firearms. This action is being taken to provide for public safety by establishing a no hunting zone around the community of Frenchglen, Oregon.

DATES: The closure order is effective July 16, 2006, and continues for perpetuity.

FOR FURTHER INFORMATION CONTACT: Karla Bird, Andrews Resource Area Field Manager, BLM, Burns District Office, 28910 Hwy 20 West, Hines, Oregon 97738, (541) 573–4400.

SUPPLEMENTARY INFORMATION: On June 15, 2006, the final decision was signed by an authorized officer of the BLM, permanently closing public lands, managed by the BLM, within one-quarter to one-half mile of Frenchglen, Oregon, to public use for the purpose of discharging firearms. During a temporary closure period, the BLM prepared an Environmental Assessment, OR–06–026–023, to consider a permanent closure. It was determined that the discharging of firearms within the ''No Shooting or Safety Zone'' is a safety hazard to the residents of the Frenchglen community.

Notice: Pursuant to 43 CFR 8364.1, discharging firearms or other devices capable of firing a projectile into or within the closed area posted ''No Shooting or Safety Zone'' is prohibited on lands administered by BLM within the closed area of Andrews Resource Area. The public lands, managed by the BLM, closed by this order are described as follows:

Willamette Meridian, Oregon

T. 32 S., R. 32 E.,

Sec. 2, lots 3 and 4, that portion lying east of transmission line, S½NW¼ east of transmission line, N½SW¼ north of Hwy 205, and the E½SW¼, SW¼SE¼ east of Elbow Springs Road.

The public land, managed by the BLM, described above contains 167 acres in Harney County, Oregon.

Closure signs have been posted at main entry points to the closed area and along the boundary as necessary. Maps of the closure area and information may be obtained from the BLM Burns District Office and at various locations in Burns, Hines, and Frenchglen.

Penalties: The authority of this closure is found under Section 303(a) of the Federal Land Policy and Management Act of 1976 (43 U.S.C. 1733(a)) and 43 CFR 8364.1. Any person who violates this closure may be tried before a United States Magistrate and fined no more than $1,000 or imprisoned for no more than 12 months, or both. (43 CFR 8360.0–7) Such violations may also be subject to the enhanced fines provided for by 18 U.S.C. 3571.

(Authority: 43 CFR 8364.1(c))

Dated: August 30, 2006.

Mark Sherbourne,

Acting Andrews Resource Area Field Manager.

[FR Doc. E6–18499 Filed 11–1–06; 8:45 am]

BILLING CODE 4310–33–P

DEPARTMENT OF THE INTERIOR

Bureau of Land Management

[ES–960–1420–BJ–TRST] Group No. 175, Wisconsin

Eastern States: Filing of Plat of Survey

AGENCY: Bureau of Land Management, Interior.

ACTION: Notice of filing of plat of survey; Wisconsin.

SUMMARY: The Bureau of Land Management (BLM) will file the plat of survey of the lands described below in the BLM-Eastern States, Springfield, Virginia, 30 calendar days from the date of publication in the **Federal Register**.

FOR FURTHER INFORMATION CONTACT: Bureau of Land Management, 7450 Boston Boulevard, Springfield, Virginia 22153. Attn: Cadastral Survey.

SUPPLEMENTARY INFORMATION: This survey was requested by the Bureau of Indian Affairs.

The lands we surveyed are:

Fourth Principal Meridian, Wisconsin

T. 38 N., R. 9 W.

The plat of survey represents the dependent resurvey of a portion of the north boundary, a portion of the east boundary, a portion of the subdivisional lines; and the subdivision of section 1 Township 38 North, Range 9 West, of the 4th Principal Meridian, in the State of Wisconsin, and was accepted October 12, 2006. We will place a copy of the plat we described in the open files. It will be available to the public as a matter of information.

If BLM receives a protest against this survey, as shown on the plat, prior to the date of the official filing, we will stay the filing pending our consideration of the protest.

We will not officially file the plat until the day after we have accepted or dismissed all protests and they have become final, including decisions on appeals.

Dated: October 12, 2006.

Michael W. Young,

Chief Cadastral Surveyor.

[FR Doc. E6–18464 Filed 11–1–06; 8:45 am]

BILLING CODE 4310–GJ–P

DEPARTMENT OF THE INTERIOR

National Park Service

Notice of Intent To Repatriate Cultural Items: Southwest Museum of the American Indian, Autry National Center, Los Angeles, CA

AGENCY: National Park Service, Interior.

ACTION: Notice.

Notice is here given in accordance with the Native American Graves Protection and Repatriation Act (NAGPRA), 25 U.S.C. 3005, of the intent to repatriate cultural items in the possession of the Southwest Museum of the American Indian, Autry National Center, Los Angeles, CA, that meet the definition of ''sacred objects'' under 25 U.S.C. 3001.

This notice is published as part of the National Park Service's administrative responsibilities under NAGPRA, 25 U.S.C. 3003 (d)(3). The determinations in this notice are the sole responsibility of the museum, institution, or Federal agency that has control of the cultural items. The National Park Service is not responsible for the determinations in this notice.

The 14 cultural items are 8 katsina kwatsi (masks), 5 wooden war gods, and 1 flute altar.

In 1960, the Southwest Museum purchased seven katsina kwatsi (masks) from Mr. Andrew T. Johnston with financial assistance provided by the Southwest Museum Acquisition Fund. According to museum documentation, Mr. Johnston acquired all seven masks from Old Oraibi, AZ. No further information has been found to clarify means of acquisition by the donor. The seven katsina kwatsi are one Tasaf, one Koyemsi, one Piftuka, one Cohnina, one Angakchina, and one Heotos.

On May 10, 1934, the Southwest Museum acquired one katsina mask from Miss Rose Dougan. Museum records identify the cultural item as an ''old Hopi bearded mask.'' No further information has been found to clarify means or location of acquisition by the donor. The katsina kwatsi is an Angakchina.

On March 8, 1941, the Southwest Museum acquired five wooden war gods or prayer effigies from Mrs. Ina Sizer Cassidy. According to donor correspondence, the ''Old Prayer effigies'' were found in 1920 by Mrs. Cassidy's husband, Gerald Cassidy, at a war gods' shrine near Old Oraibi, AZ, during Snake Dance ceremonies.

On June 28, 1950, the Southwest Museum purchased one flute altar from Mr. William Neil Smith with financial assistance provided by the General Charles McCormack Reeve Fund. According to museum documentation, Mr. Smith acquired the altar in Old Oraibi, AZ. No further information has been found to clarify means of acquisition by the donor.

Museum documentation indicates that the 14 cultural items originated from Old Oraibi, which is located within the Hopi Reservation. Archeological and ethnographic evidence suggests that the Hopi have continuously inhabited the Old Oraibi since A.D. 1150. In 1900, Old Oraibi was the largest Hopi settlement.

Consultation and physical inspection of the cultural items described above by the knowledgeable traditional cultural authorities of the Hopi Tribe of Arizona, the Katsinmomngwit (Kachina Priest) and Lenmomngwit (Flute Priest), have identified the cultural items as culturally affiliated with the Hopi Tribe of Arizona. According to the traditional cultural authorities, the cultural items have ongoing historical, traditional, and cultural importance to the Hopi Tribe of Arizona. As part of continuing religious practice, the cultural items must be cared for by current members of the Kachina and Flute Societies of the Hopi.

Officials of the Southwest Museum have determined that, pursuant to 25 U.S.C. 3001 (3)(C), the 14 cultural items described above are specific ceremonial objects needed by traditional Native American religious leaders for the practice of traditional Native American religions by their present-day adherents. Officials of the Southwest Museum also have determined that, pursuant to 25 U.S.C. 3001 (2), there is a relationship of shared group identity that can be reasonably traced between the 14 sacred objects and the Hopi Tribe of Arizona.

Representatives of any other Indian tribe that believes itself to be culturally affiliated with the sacred objects should contact Dr. Duane H. King, Executive Director, or Jamie Hebert, NAGPRA Research Associate for Collections, Southwest Museum of the American Indian, Autry National Center, 234 Museum Drive, Los Angeles, CA 90065, telephone (323) 221–2164 extension 241, before December 4, 2006. Repatriation of the 14 sacred objects to the Hopi Tribe of Arizona may proceed after that date if no additional claimants come forward.

The Southwest Museum is responsible for notifying the Hopi Tribe of Arizona that this notice has been published.

Dated: September 28, 2006

Sherry Hutt,

Manager, National NAGPRA Program.

[FR Doc. E6–18476 Filed 11–1–06; 8:45 am]

BILLING CODE 4312–50–S

DEPARTMENT OF THE INTERIOR

National Park Service

Notice of Inventory Completion: Southwest Museum of the American Indian, Autry National Center, Los Angeles, CA

AGENCY: National Park Service, Interior.

ACTION: Notice.

Notice is here given in accordance with the Native American Graves Protection and Repatriation Act (NAGPRA), 25 U.S.C. 3003, of the completion of an inventory of human remains in the control of the Southwest Museum of the American Indian, Autry National Center, Los Angeles, CA. The human remains were removed from Ontario County, NY.

This notice is published as part of the National Park Service's administrative responsibilities under NAGPRA, 25 U.S.C. 3003 (d)(3). The determinations in this notice are the sole responsibility of the museum, institution, or Federal agency that has control of the Native American human remains. The National Park Service is not responsible for the determinations in this notice.

A detailed assessment of the human remains was made by Southwest Museum professional staff in consultation with representatives of the Cayuga Nation of New York, Oneida Nation of New York, Oneida Tribe of Indians of Wisconsin, Onondaga Nation of New York, Seneca Nation of New York, Seneca-Cayuga Tribe of Oklahoma, St. Regis Band of Mohawk Indians of New York, Tonawanda Band of Seneca Indians of New York, and Tuscarora Nation of New York, as well as the Haudenosaunee Standing Committee on Burial Rights and Regulations, a non-federally recognized Indian group.

In 1885, human remains representing a minimum of two individuals were removed from a grave near Canandaigua, Ontario County, NY. The museum has no additional information regarding the circumstances of removal. Mrs. Phyllis Lockley, mother of Robert Campbell Lockley, acquired the human remains as part of her son's estate. On January 18, 1962, Mrs. Lockley signed the original Deed of Gift and transferred the human remains to the museum, which accessioned the human remains

into its collection the same year. No known individuals were identified. No associated funerary objects are present.

On the original Deed of Gift, the credit line identifies all objects donated by Mrs. Lockley as ''materials collected by Mrs. Hope Gans Lockley, 1885.'' However, in a letter written after the Deed of Gift, Mrs. Lockley asks the museum to correct the deed to attribute only one donated item to Mrs. Hope Gans Lockley as ''all of the other items were from the estate of (her) son, Robert Campbell Lockley.'' The museum responded to this request on February 9, 1962, to assure her that the required change in the last line of the deed would be executed. It is unclear why this correction was not made before Mrs. Lockley signed the final document.

Museum records and physical anthropological assessment have determined the human remains to be of probable Native American descent. Archeological and historical evidence indicate that the Owasco culture occupied central and eastern New York and the Glaciated Alleghany Plateau during the Woodland Stage (1000 B.C.-A.D. 1600). Around A.D. 1600, the Owasco culture underwent a cultural transition. Between A.D. 1450 and 1600, diagnostic characteristics indicative of the Seneca culture begin to become evident in the archeological record. From the early 16th century until the American Revolution, the Seneca occupied a region between the Genesee River and Canandaigua Lake, which includes Livingstone and Ontario Counties, NY, as well as the southern portion of Monroe County, NY. A cultural connection can be reasonably traced from the Owasco people to the present-day Seneca Nation of New York, Seneca-Cayuga Tribe of Oklahoma, and Tonawanda Band of Seneca Indians of New York.

Officials of the Southwest Museum have determined that, pursuant to 25 U.S.C. 3001 (9–10), the human remains described above represent the physical remains of two individuals of Native American ancestry. Officials of the Southwest Museum also have determined that, pursuant to 25 U.S.C. 3001 (2), there is a relationship of shared group identity that can be reasonably traced between the Native American human remains and the Seneca Nation of New York, Seneca-Cayuga Tribe of Oklahoma, and Tonawanda Band of Seneca Indians of New York.

Representatives of any other Indian tribe that believes itself to be culturally affiliated with the human remains should contact Dr. Duane H. King, Executive Director, or Jamie Hebert, NAGPRA Research Associate for Collections, Southwest Museum of the American Indian, Autry National Center, 234 Museum Drive, Los Angeles, CA 90065, telephone (323) 221–2164, before December 4, 2006. Repatriation of the human remains to the Seneca Nation of New York, Seneca-Cayuga Tribe of Oklahoma, and Tonawanda Band of Seneca Indians of New York may proceed after that date if no additional claimants come forward.

Southwest Musuem is responsible for notifying the Cayuga Nation of New York, Oneida Nation of New York, Oneida Tribe of Indians of Wisconsin, Onondaga Nation of New York, Seneca Nation of New York, Seneca-Cayuga Tribe of Oklahoma, St. Regis Band of Mohawk Indians of New York, Tonawanda Band of Seneca Indians of New York, and Tuscarora Nation of New York, as well as the Haudenosaunee Standing Committee on Burial Rights and Regulations, a non-federally recognized Indian group, that this notice has been published.

Dated: September 28, 2006

Sherry Hutt,

Manager, National NAGPRA Program.

[FR Doc. E6–18483 Filed 11–1–06; 8:45 am]

BILLING CODE 4312–50–S

DEPARTMENT OF THE INTERIOR

National Park Service

Notice of Intent To Repatriate Cultural Items: Southwest Museum of the American Indian, Autry National Center, Los Angeles, CA

AGENCY: National Park Service, Interior.

ACTION: Notice.

Notice is here given in accordance with the Native American Graves Protection and Repatriation Act (NAGPRA), 25 U.S.C. 3005, of the intent to repatriate cultural items in the possession of the Southwest Museum of the American Indian, Autry National Center, Los Angeles, CA, that meet the definitions of ''sacred objects'' and ''objects of cultural patrimony'' under 25 U.S.C. 3001.

This notice is published as part of the National Park Service's administrative responsibilities under NAGPRA, 25 U.S.C. 3003 (d)(3). The determinations in this notice are the sole responsibility of the museum, institution, or Federal agency that has control of the cultural items. The National Park Service is not responsible for the determinations in this notice.≤

The 55 cultural items are 42 pieces of Dilzini Gaan dance material, 6 Dilzini Gaan headdresses, 2 Dilzini Gaan dance wands, 2 crosses, 1 shirt, 1 medicine bundle, and 1 cap.

Southwest Museum officials identified the cultural items and assessed the cultural affiliation of the cultural items at the request of the San Carlos Apache Tribe of the San Carlos Reservation, Arizona; Tonto Apache Tribe of Arizona; White Mountain Apache Tribe of the Fort Apache Reservation, Arizona; and Yavapai-Apache Nation of the Camp Verde Indian Reservation, Arizona, which are members of the Western Apache NAGPRA Working Group. Southwest Museum officials also consulted with representatives of the Apache Tribe of Oklahoma; Fort Sill Apache Tribe of Oklahoma; Jicarilla Apache Nation, New Mexico; and Mescalero Apache Tribe of the Mescalero Reservation, New Mexico.

At an unknown time, the Southwest Museum purchased 42 painted and carved wooden pieces of Dilzini Gaan dance material from an unknown person at an unknown location with money provided by the General Charles McCormack Reeve Fund. No further information has been found to clarify means of acquisition by the donor.

The 42 wooden pieces of Dilzini Gaan dance material range from 4 to 30 inches in length, and average 2 inches in breadth and .25 inches in depth. Some of the wooden pieces have been sharpened to a point at each end, others remain squared and blunt, while others exhibit notched, flattened or broken edges.

On May 24, 1940, the Southwest Museum acquired one Dilzini Gaan headdress from Miss Rose Dougan. Museum records identify the cultural item as an Apache ''Devil Dance'' headdress with a cloth mask. No further information has been found to clarify means or location of acquisition by the donor.

The Dilzini Gaan headdress is composed of wooden slats arranged in a fan shape measuring approximately 38 inches wide and 23 inches high. The slats are decorated with green, blue, orange, and white paint. Two tassels made of four slender, blue wooden rods are attached to the laterally projecting slats, one tassel on the right side and one on the left side. The mask is approximately 11 inches wide and 17.5 inches long. It is made of a flour sack painted black. One side of the mask is imprinted with the words, ''Loveland flour...Love Me.'' Two slits have been made near the wearer's eyes. Above these holes are a feather and four white triangles.

On December 3, 1935, the Southwest Museum purchased three Dilzini Gaan

headdresses from Ms. Bonnie Gray of Burbank, CA, with money provided by the General Charles McCormack Reeve Fund. According to correspondence found in the museum records, Ms. Gray and a companion unearthed the masks in Arizona from the floor of a deserted Apache cabin during the middle of the night. Museum records identify all four headdresses as Apache ''Devil Dance'' material.

The first of the three Dilzini Gaan headdresses is made of wooden slats tied together with sinew arranged in a fan shape measuring approximately 31 inches wide and 35 inches high. The slats are decorated with small mirrors and red, black, blue and yellow painted zigzags, arrows, birds, and geometric designs. A black cloth mask is attached to the frame with two slits made for the wearer's eyes. The second Dilzini Gaan headdress is made of wooden slats tied together with sinew arranged in a fan shape measuring approximately 30.5 inches wide and 36 inches high. Blue, red-orange, black, purple, green, and yellow triangles, diamonds, circles, and other geometric shapes have been painted on both sides of the wooden slats. The third Dilzini Gaan headdress is made of long wooden slats divided into three groups and connected by smaller wooden slats to create a fan shaped arc tied together with sinew. It measures approximately 26 inches wide and 40 inches high. Red, yellow, blue, purple, and green diamonds, scallops, triangles, and dots have been painted on both sides of the slats. Mirrors adhere to the longer slats and one mirror appears to be missing. Two tassels made of four slender yellow wooden rods are attached to the laterally projecting slats. There is no mask for the headdress.

On December 31, 1941, the Southwest Museum received one Dilzini Gaan headdress and two Dilzini Gaan dance wands from Mr. M.R. Harrington, Director of Research, Southwest Museum, originating from an unspecified area in Arizona. Museum records identify the material as Apache ''Devil Dance'' material. No further information has been found to clarify means of acquisition by the donor.

The Dilzini Gaan headdress is made of long wooden slats tied together with sinew and arranged in a fan shape. It measures approximately 30 inches wide and 31 inches high. Blue, red, and orange triangles, diamonds, and dots have been painted on the slats. Two tassels made of four slender wooden rods are attached to the laterally projecting slats. A black cloth mask is attached to the wooden frame. Two slits have been made for the wearer's eyes, and silver buttons are sewn in the same vicinity. The two Dilzini Gaan dance wands are made of six pointed wooden slats tied together horizontally and attached perpendicularly to a long wooden handle. Red diamonds have been painted onto the plane created by the horizontal wooden slats.

On December 12, 1950, the Southwest Museum acquired one Dilzini Gaan headdress from Mr. Owen L. Gothard of Clark County, NV. Museum records identify the item as Apache ''Devil Dance'' material. No further information has been found to clarify means of acquisition by the donor.

The Dilzini Gaan headdress is made of wooden slats of various lengths tied together with sinew in both a horizontal and vertical direction. The slats form a rectangle approximately 19 inches wide and 20.25 inches high. Black, yellow, red, and blue geometric designs have been painted on both surfaces. A dark cloth face mask is attached to the frame. The mask measures approximately 18.75 inches in long.

On March 5, 1943, the Southwest Museum received two cultural items from Mr. John W. Ennis, Jr., of Los Angeles, CA. Museum records identify the items as a Western Apache medicine shirt and a medicine bundle composed of a plaque and deerskin bag. According to database records, the two cultural items were originally obtained by a missionary. It is unclear how Mr. Ennis, Jr., came to possess the cultural items. No further information has been found to clarify means or location of acquisition by the donor.

The medicine shirt, or shaman's garment, is a painted deer hide with a scalloped border measuring approximately 25.5 inches wide and 30 inches long. A slit has been cut near the center for the wearer's neck. Black, yellow, and green designs have been painted on both sides of the hide. The medicine bundle is composed of two items. The first item is a wooden plaque measuring approximately 9.5 inches wide and 4 inches long. An orange, black, and white figure has been painted on the plaque surface. A deerskin thong and feathers are attached to a center perforation. The second item is a deerskin bag with shoulder strap. The bag measures approximately 9.75 inches wide and 4.75 inches long. A green, black, and yellow figure has been painted on the bag, similar to the one on the wooden plaque. Eight groups of feathers are attached to the bag and along the length of the strap.

On an unknown date, the Southwest Museum purchased two wooden crosses from Mr. Bill Smith with money provided by the General Charles McCormack Reeve Fund. No further information has been found to clarify means of acquisition by the donor.

The first cross is 56 inches high, 33.5 inches across, and .25 inches thick. The cross is composed of five long wooden slats tapered to a point distally, traversed horizontally by five shorter wooden slats. Blue, black, and white zigzagged lines have been painted on the surface. A circular appendage has been attached to the top of the cross. Two dark brown feathers measuring 12 inches in length remain tied to the cross by a cloth cord. The second cross is 52 inches high, 24 inches across, and .25 inches thick. The cross is composed of five long wooden slats tapered to a point distally, traversed horizontally by five shorter wooden slats. Blue, black, and white zigzagged lines have been painted on the surface.

On February 2, 1959, the Southwest Museum acquired one cap from Mr. Julian Adams of Marino, CA, as part of the Mary E. Adams ethnological collection. Museum records identify the cap as Apache. The cap is a man's buckskin cap and exhibits white, black, and dark red beads sewn in a star pattern. Seven eagle feathers are attached to the top. No further information has been found to clarify the means or location of acquisition by the donor.

Consultation and physical inspection of the cultural items described above by knowledgeable Western Apache traditional cultural authorities of the San Carlos Apache Tribe of the San Carlos Reservation, Arizona; Tonto Apache Tribe of Arizona; White Mountain Apache Tribe of the Fort Apache Reservation, Arizona; and Yavapai-Apache Nation of the Camp Verde Indian Reservation, Arizona have identified the cultural items as culturally affiliated with Western Apache Indian tribes. According to the traditional cultural authorities, the cultural items have ongoing historical, traditional, and cultural importance to the Western Apache, and today, must be returned to the tribes representing the Western Apache to fully complete the ceremonial cycle into which they were introduced; as such, the cultural items are objects of cultural patrimony.

According to Western Apache traditional cultural authorities, the 55 cultural items are made and handled according to instructions received from the Creator. The Creator is the only One who has the right to possess the cultural items after their use by humans. The cultural items must be put away properly to return them to the Creator; as such, the cultural items are sacred objects. The Western Apache are represented today by the federally

recognized San Carlos Apache Tribe of the San Carlos Reservation, Arizona; Tonto Apache Tribe of Arizona; White Mountain Apache Tribe of the Fort Apache Reservation, Arizona; and Yavapai-Apache Nation of the Camp Verde Indian Reservation, Arizona. These four tribes are members of the Western Apache NAGPRA Working Group.

Officials of the Southwest Museum have determined that, pursuant to 25 U.S.C. 3001 (3)(C), the 55 cultural items described above are specific ceremonial objects needed by traditional Native American religious leaders for the practice of traditional Native American religions by their present-day adherents. Officials of the Southwest Museum have also determined that, pursuant to 25 U.S.C. 3001 (3)(D), the 55 cultural items described above have ongoing historical, traditional, or cultural importance central to the Native American group or culture itself, rather than property owned by an individual. Lastly, officials of the Southwest Museum have determined that, pursuant to 25 U.S.C. 3001 (2), there is a relationship of shared group identity that can be reasonably traced between the objects of cultural patrimony and sacred objects and the San Carlos Apache Tribe of the San Carlos Reservation, Arizona; Tonto Apache Tribe of Arizona; White Mountain Apache Tribe of the Fort Apache Reservation, Arizona; and Yavapai-Apache Nation of the Camp Verde Indian Reservation, Arizona.

Representatives of any other Indian tribe that believes itself to be culturally affiliated with the objects of cultural patrimony and sacred objects should contact Dr. Duane H. King, Executive Director, or Jamie Hebert, NAGPRA Research Associate for Collections, Southwest Museum of the American Indian, Autry National Center, 234 Museum Drive, Los Angeles, CA 90065, telephone (323) 221–2164 extension 241, before December 4, 2006. Repatriation of the objects of cultural patrimony and scared objects to the San Carlos Apache Tribe of the San Carlos Reservation, Arizona; Tonto Apache Tribe of Arizona; White Mountain Apache Tribe of the Fort Apache Reservation, Arizona; and Yavapai-Apache Nation of the Camp Verde Indian Reservation, Arizona may proceed after that date if no additional claimants come forward.

Southwest Museum is responsible for notifying the Apache Tribe of Oklahoma; Fort Sill Apache Tribe of Oklahoma; Jicarilla Apache Nation, New Mexico; Mescalero Apache Tribe of the Mescalero Reservation, New Mexico; San Carlos Reservation, Arizona; Tonto Apache Tribe of Arizona; White Mountain Apache Tribe of the Fort Apache Reservation, Arizona; and Yavapai-Apache Nation of the Camp Verde Indian Reservation, Arizona that this notice has been published.

Dated: September 28, 2006.

Sherry Hutt,

Manager, National NAGPRA Program.

[FR Doc. E6–18509 Filed 11–1–06; 8:45 am]

BILLING CODE 4312–50–S

DEPARTMENT OF THE INTERIOR

National Park Service

Notice of Inventory Completion: Thomas Burke Memorial Washington State Museum, University of Washington, Seattle, WA

AGENCY: National Park Service, Interior.

ACTION: Notice.

Notice is here given in accordance with the Native American Graves Protection and Repatriation Act (NAGPRA), 25 U.S.C. 3003, of the completion of an inventory of human remains and associated funerary objects in the control of the Thomas Burke Memorial Washington State Museum (Burke Museum), University of Washington, Seattle, WA. The human remains and associated funerary objects were removed from Yakima County, WA.

This notice is published as part of the National Park Service's administrative responsibilities under NAGPRA, 25 U.S.C. 3003 (d)(3). The determinations in this notice are the sole responsibility of the museum, institution, or Federal agency that has control of the Native American human remains and associated funerary objects. The National Park Service is not responsible for the determinations in this notice.

A detailed assessment of the human remains was made by the Burke Museum professional staff in consultation with representatives of the Confederated Tribes and Bands of the Yakama Nation, Washington; Confederated Tribes of the Colville Reservation, Washington; Confederated Tribes of the Umatilla Reservation, Oregon; and Confederated Tribes of the Warm Springs Reservation of Oregon.

In 1959, human remains representing a minimum of one individual were removed from Bergen site #30 at the junction of Wenas Creek and Yakima River, Yakima County, WA, by Dr. Harold Bergen, an avocational archeologist. In 1989, the human remains and cultural items were donated by Dr. Bergen to the Burke Museum (Burke Accn. # 1989–57). No known individual was identified. The 102 associated funerary objects are 1 basketry fragment, 2 unmodified stones, 46 mammal remains, 1 point, 1 scraper, 49 shell and shell bead fragments, 1 elk tooth pendant, and 1 utilized flake.

The human remains were collected from a talus area in a shallow depression of a talus slide with basalt rocks mounded around the depression. Dr. Bergen excavated a single burial. The burial contained no evidence of burning, however, other burials at the site, but not removed, showed signs of burning and appeared to be cremations. This burial pattern is consistent with Yakama burial practices (Schuster 1990: 338).

The Yakama Treaty, signed on June 9, 1855, included the area surrounding the junction of Wenas Creek and Yakima River in the aboriginal territory of the present-day Confederated Tribes and Bands of the Yakama Nation, Washington. Other ethnographic and historic documentation confirms that this area is in the aboriginal territory of the Yakama (Daugherty 1973; Ray 1936; Schuster 1990). According to Swanton (1952), the Yakama group Si'la-hlama occupied the area along the Yakima River between Wenas Creek and Umtanum Creek. Furthermore, the Lower Yakama village ts'kik was located on the Yakima River, just downstream from the junction of Wenas Creek and the Yakima River. Descendants of the Yakama are members of the present-day Confederated Tribes and Bands of the Yakama Nation, Washington.

Officials of the Burke Museum have determined that, pursuant to 25 U.S.C. 3001 (9–10), the human remains described above represent the physical remains of one individual of Native American ancestry. Officials of the Burke Museum also have determined that, pursuant to 25 U.S.C. 3001 (3)(A), the 102 objects described above are reasonably believed to have been placed with or near individual human remains at the time of death or later as part of the death rite or ceremony. Lastly, officials of the Burke Museum have determined that, pursuant to 25 U.S.C. 3001 (2), there is a relationship of shared group identity that can be reasonably traced between the Native American human remains and associated funerary objects and the Confederated Tribes and Bands of the Yakama Nation, Washington.

Representatives of any other Indian tribe that believes itself to be culturally affiliated with the human remains and associated funerary objects should contact Dr. Peter Lape, Burke Museum, University of Washington, Box 353010,

Seattle, WA 98195–3010, telephone (206) 685–2282, before December 4, 2006. Repatriation of the human remains and associated funerary objects to the Confederated Tribes and Bands of the Yakama Nation, Washington may proceed after that date if no additional claimants come forward.

The Burke Museum is responsible for notifying the Confederated Tribes and Bands of the Yakama Nation, Washington; Confederated Tribes of the Colville Reservation, Washington; Confederated Tribes of the Umatilla Reservation, Oregon; and Confederated Tribes of the Warm Springs Reservation of Oregon that this notice has been published.

Dated: September 28, 2006

Sherry Hutt,

Manager, National NAGPRA Program.

[FR Doc. E6–18479 Filed 11–1–06; 8:45 am]

BILLING CODE 4312–50–S

DEPARTMENT OF THE INTERIOR

National Park Service

Notice of Intent To Repatriate Cultural Items: Thomas Burke Memorial Washington State Museum, University of Washington, Seattle, WA

AGENCY: National Park Service, Interior.

ACTION: Notice.

Notice is here given in accordance with the Native American Graves Protection and Repatriation Act (NAGPRA), 25 U.S.C. 3005, of the intent to repatriate cultural items in the possession of the Thomas Burke Memorial Washington State Museum (Burke Museum), University of Washington, Seattle, WA, that meet the definition of ''unassociated funerary objects'' under 25 U.S.C. 3001.

This notice is published as part of the National Park Service's administrative responsibilities under NAGPRA, 25 U.S.C. 3003 (d)(3). The determinations in this notice are the sole responsibility of the museum, institution, or Federal agency that has control of the cultural items. The National Park Service is not responsible for the determinations in this notice.

The 1,549 cultural items are 1 copper ore, 5 abalone shell gorgets, 5 shell pendants, 2 shell fragments, 1 steatite pipe, 2 points, 1,530 beads, 1 basketry fragment with leather, 1 iron spear, and 1 iron axehead.

Between 1950 and 1960, Dr. Harold Bergen, an avocational archeologist, collected funerary objects from the Bergen site #20, along the foot of a rocky bluff outside of Selah, Yakima County, WA. Ten burials were found in a flexed position with stones placed on the human remains. The human remains were in a fragile condition and were not collected with the exception of two crania. The crania were not accessioned by the Burke Museum and the whereabouts of the two individuals are unknown. In 1989, the unassociated funerary objects were donated to the Burke Museum (Burke Accession #1989–57). The 1,546 unassociated funerary objects are 1 copper ore, 5 abalone shell gorgets, 5 shell pendants, 2 shell fragments, 1 steatite pipe, 2 points, and 1,530 beads.

Ethnographic and archeological evidence indicates that rockslide burials in talus slopes were customary burial practices of the Yakama. It was also customary for the Yakama to bury individuals with many of their personal belongings. The burial practices and funerary objects are consistent with practices of the Confederated Tribes and Bands of the Yakama Nation, Washington. Selah is within the aboriginal territory of the Confederated Tribes and Bands of the Yakama Nation, Washington and within the land claims boundaries of Indian Claims Commission decisions (12 ICC 301 (1963); 7 ICC 794 (1959)).

In 1995, one cultural item was accessioned by the museum when it was found in collections (Burke Accession #1995–64). The circumstances surrounding how the cultural item came into Burke Mueum's collection is unknown. According to museum documentation, the cultural item was collected from a burial immediately south of Priest Rapids Dam, Yakima County, WA. The one unassociated funerary object is a fragment of leather attached to a basketry fragment. Museum documentation includes a note indicating it was from the Earnest Combes Collection, that copper was also found with the burial, and the human remains were those of a child. The human remains and copper are not located at the Burke Museum and no further information could be located.

Ethnographic and archeological data suggests that deceased Yakama people were commonly wrapped in buckskin, blankets, and tule mats in preparation for burial. The leather and basketry fragments are consistent with this information. Priest Rapids Dam is within the aboriginal territory of the Confederated Tribes and Bands of the Yakama Nation, Washington.

In 1896, two cultural items were acquired through trade with the Hudson Bay Company by Dr. R.E Stewart. According to museum documentation, the cultural items were found on a grave and are from Satus Creek, WA. In 1905, the cultural items were donated to the Burke Museum (Burke Accession #40). The two unassociated funerary objects are one iron spear and one iron axe head.

The two cultural items are consistent with other funerary objects known to be associated with Yakama burials. The Se'tas-lema and Lower Yakama bands were the groups ethnographically noted to have occupied the Satus Creek area. Satus Creek is within the aboriginal territory of the Confederated Tribes and Bands of the Yakama Nation, Washington. Satus Creek falls within the lands ceded in the Yakama Treaty of 1855.

Officials of the Burke Museum have determined that, pursuant to 25 U.S.C. 3001 (3)(B), the cultural items described above are reasonably believed to have been placed with or near individual human remains at the time of death or later as part of the death rite or ceremony and are believed, by a preponderance of the evidence, to have been removed from a specific burial site of a Native American individual. Officials of the Burke Museum also have determined that, pursuant to 25 U.S.C. 3001 (2), there is a relationship of shared group identity that can be reasonably traced between the 1,549 unassociated funerary objects and the Confederated Tribes and Bands of the Yakama Nation, Washington.

Representatives of any other Indian tribe that believes itself to be culturally affiliated with the unassociated funerary objects should contact Dr. Peter Lape, Burke Museum, University of Washington, Box 353010, Seattle, WA 98195–3010, telephone (206) 685–2282, before December 4, 2006. Repatriation of the unassociated funerary objects to the Confederated Tribes and Bands of the Yakama Nation, Washington may proceed after that date if no additional claimants come forward.

The Burke Museum is responsible for notifying the Confederated Tribes and Bands of the Yakama Nation, Washington that this notice has been published.

Dated: September 28, 2006

Sherry Hutt,

Manager, National NAGPRA Program.

[FR Doc. E6–18482 Filed 11–1–06; 8:45 am]

BILLING CODE 4312–50–S

DEPARTMENT OF JUSTICE

Justice Management Division; No FEAR Act Notice

AGENCY: Justice Management Division, Department of Justice.

ACTION: Notice.

SUMMARY: This notice fulfills the Department of Justice's ''No FEAR Act Notice'' **Federal Register** publication obligations, as required by the Act and by the Office of Personnel Management implementing regulations at 5 CFR 724.202.

DATES: This notice is effective November 2, 2006.

FOR FURTHER INFORMATION CONTACT: Marcus Williams, Acting Director, Equal Employment Opportunity Staff, Department of Justice, Suite 10001, 1425 New York Avenue, NW., Washington, DC 20530. Telephone: (202) 616–4800.

SUPPLEMENTARY INFORMATION: On May 15, 2002, Congress enacted the ''Notification and Federal Employee Antidiscrimination and Retaliation Act of 2002'' which is now known as the No FEAR Act. One purpose of the Act is to ''require that Federal agencies be accountable for violations of antidiscrimination and whistleblower protection laws.'' Public Law 107–174. In support of this purpose, Congress found that ''agencies cannot be run effectively if those agencies practice or tolerate discrimination.'' Public Law 107–174, Title I, General Provisions, section 101(1).

The Act also requires Federal agencies, including the Department of Justice (''DOJ''), to provide this notice to Federal employees, former Federal employees and applicants for Federal employment to inform you of the rights and protections available to you under Federal antidiscrimination and whistleblower protection laws.

Antidiscrimination Laws

The Department of Justice cannot discriminate against an employee or applicant for Federal employment with respect to the terms, conditions or privileges of employment on the basis of race, color, religion, sex, national origin, age, disability, marital status or political affiliation. Discrimination on these bases is prohibited by one or more of the following statutes: 5 U.S.C. 2302(b)(1), 29 U.S.C. 206(d), 29 U.S.C. 631, 29 U.S.C. 633a, 29 U.S.C. 791 and 42 U.S.C. 2000e–16. If you believe that you have been the victim of unlawful discrimination on the basis of race, color, religion, sex, national origin or disability, you must contact an Equal Employment Opportunity (EEO) counselor within 45 calendar days of the alleged discriminatory action, or, in the case of a personnel action, within 45 calendar days of the effective date of the action, before you can file a formal complaint of discrimination with your agency. *See*, e.g., 29 CFR part 1614. If you believe that you have been the victim of unlawful discrimination on the basis of age, you must either contact an EEO counselor, as noted above, or give notice of intent to sue to the Equal Employment Opportunity Commission (EEOC) within 180 calendar days of the alleged discriminatory action. If you are alleging discrimination based on marital status or political affiliation, you may file a written complaint with the U.S. Office of Special Counsel (OSC) (see contact information below). In the alternative (or in some cases, in addition), you may pursue a discrimination complaint by filing a grievance through the DOJ's administrative or negotiated grievance procedures, if such procedures apply and are available.

Whistleblower Protection Laws

A DOJ employee with authority to take, direct others to take, recommend or approve any personnel action must not use that authority to take or fail to take, or threaten to take or fail to take, a personnel action against an employee or applicant because of disclosure of information by that individual that is reasonably believed to evidence violations of law, rule or regulation; gross mismanagement; gross waste of funds; an abuse of authority; or a substantial and specific danger to public health or safety, unless disclosure of such information is specifically prohibited by law and such information is specifically required by Executive Order to be kept secret in the interest of national defense or the conduct of foreign affairs.

Retaliation against an employee or applicant for making a protected disclosure is prohibited by 5 U.S.C. 2302(b)(8). If you believe that you have been the victim of whistleblower retaliation, you may file a written complaint (Form OSC–11) with the U.S. Office of Special Counsel at 1730 M Street, NW., Suite 218, Washington, DC 20036–4505 or online through the OSC Web site—*http://www.osc.gov.*

Retaliation for Engaging in Protected Activity

The DOJ cannot retaliate against an employee or applicant for employment because that individual exercises his or her rights under any of the Federal antidiscrimination or whistleblower protection laws listed above. If you believe that you are the victim of retaliation for engaging in protected activity, you must follow, as appropriate, the procedures described in the Antidiscrimination Laws and Whistleblower Protection Laws sections or, if applicable, the administrative or negotiated grievance procedures in order to pursue any legal remedy.

Disciplinary Actions

Under the existing laws, the DOJ retains the right, where appropriate, to discipline an employee for conduct that is inconsistent with Federal Antidiscrimination and Whistleblower Protection Laws up to and including removal. If OSC has initiated an investigation under 5 U.S.C. 1214, however, according to 5 U.S.C. 1214(f), the DOJ must seek approval from the Special Counsel to discipline employees for, among other activities, engaging in prohibited retaliation. Nothing in the No FEAR Act alters existing laws or permits the DOJ to take unfounded disciplinary action against a Federal employee or to violate the procedural rights of a Federal employee who has been accused of discrimination.

Additional Information

For further information regarding the No FEAR Act regulations, refer to 5 CFR part 724, as well as the Equal Employment Opportunity Staff at the Department of Justice. Additional information regarding Federal antidiscrimination, whistleblower protection and retaliation laws can be found at the EEOC Web site—*http://www.eeoc.gov* and the OSC Web site—*http://www.osc.gov.*

Existing Rights Unchanged

Pursuant to section 205 of the No FEAR Act, neither the Act nor this notice creates, expands or reduces any rights otherwise available to any employee, former employee or applicant under the laws of the United States, including the provisions of law specified in 5 U.S.C. 2302(d).

Dated: October 16, 2006.

Lee J. Lofthus,

Acting Assistant Attorney General for Administration.

[FR Doc. 06–9022 Filed 11–1–06; 8:45 am]

BILLING CODE 4410–NW–M

DEPARTMENT OF JUSTICE

Bureau of Prisons

Annual Determination of Average Cost of Incarceration

AGENCY: Bureau of Prisons, Justice.

ACTION: Notice.

SUMMARY: The fee to cover the average cost of incarceration for Federal inmates in Fiscal Year 2005 was $20,842.

DATES: *Effective Date:* November 2, 2006.

ADDRESSES: Office of General Counsel, Federal Bureau of Prisons, 320 First St., NW., Washington, DC 20534.

FOR FURTHER INFORMATION CONTACT: Sarah Qureshi, (202) 307–2105.

SUPPLEMENTARY INFORMATION: 28 CFR part 505 allows for assessment and collection of a fee to cover the average cost of incarceration for Federal inmates. We calculate this fee by dividing the number representing Bureau facilities' monetary obligation (excluding activation costs) by the number of inmate-days incurred for the preceding fiscal year, and then by multiplying the quotient by 365.

Under § 505.2, the Director of the Bureau of Prisons determined that, based upon fiscal year 2005 data, the fee to cover the average cost of incarcerating a single inmate for one year during 2005 was $20,842.

Harley G. Lappin,

Director, Bureau of Prisons.

[FR Doc. E6–18446 Filed 11–1–06; 8:45 am]

BILLING CODE 4410–05–P

DEPARTMENT OF LABOR

Employee Benefits Security Administration

Agency Information Collection Activities; Announcement of OMB Approvals

AGENCY: Employee Benefits Security Administration, Labor.

ACTION: Notice.

SUMMARY: The Employee Benefits Security Administration (EBSA) announces that the Office of Management and Budget (OMB) has approved certain collections of information, listed in the Supplementary Information below, following EBSA's submission of requests for such approvals under the Paperwork Reduction Act of 1995 (PRA) (44 U.S.C. 3501 *et seq.*). This notice describes the information collections that have been approved or re-approved, their OMB control numbers, and their current expiration dates.

FOR FURTHER INFORMATION CONTACT: Susan G. Lahne, Office of Policy and Research, Employee Benefits Security Administration, U.S. Department of Labor, 200 Constitution Avenue, NW., Room N–5647, Washington, DC 20210. Telephone: (202) 693–8410; Fax: (202) 219–4745. These are not toll-free numbers.

SUPPLEMENTARY INFORMATION: The PRA and its implementing regulations require Federal agencies to display OMB control numbers and inform respondents of their legal significance after OMB has approved an agency's information collections. In accordance with those requirements, EBSA hereby notifies the public that the following information collections have been re-approved by OMB following EBSA's submission of an information collection request (ICR) for extension of a prior approval:

- OMB Control No. 1210–0114, Disclosures by Insurers to General Account Policyholders (final regulation). The expiration date for this information collection is March 31, 2009.
- OMB Control No. 1210–0090, Disclosures for Participant Directed Individual Account Plans under ERISA Section 404(c) (final regulation). The expiration date for this information collection is March 31, 2009.
- OMB Control No. 1210–0084, ERISA Technical Release 91–1 (notice). The expiration date for this information collection is March 31, 2009.
- OMB Control No. 1210–0066, ERISA Procedure 76–1; Advisory Opinion Procedure. The expiration date for this information collection is May 31, 2009.
- OMB Control No. 1210–0091, Settlement Agreements between a Plan and a Party in Interest (PTEs 94–71, 03–39). The expiration date for this information collection is May 31, 2009.
- OMB Control No. 1210–0122, Notice of Blackout Period under ERISA (final regulation). The expiration date for this information collection is May 31, 2009.
- OMB Control No. 1210–0100, Definition of Plan Assets—Participant Contributions (final regulation). The expiration date for this information collection is June 30, 2009.
- OMB Control No. 1210–0113, National Medical Support Notice—Part B (final regulation). The expiration date for this information collection is June 30, 2009.
- OMB Control No. 1210–0040, ERISA Summary Annual Report (final regulation). The expiration date for this information collection is July 31, 2009.
- OMB Control No. 1210–0115, Prohibited Transaction Class Exemption for Cross-Trades of Securities by Index and Model-Driven Funds (PTE 02–12). The expiration date for this information collection is August 31, 2009.
- OMB Control No. 1210–0082, Bank Collective Investment Funds; Prohibited Transaction Class Exemption 91–38. The expiration date for this information collection is August 31, 2009.
- OMB Control No. 1210–0083, PTE 90–1; Insurance Company Pooled Separate Accounts (prohibited transaction class exemption). The expiration date for this information collection is August 31, 2009.
- OMB Control No. 1210–0104, Prohibited Transaction Class Exemption 97–41; Collective Investment Funds Conversion Transactions. The expiration date for this information collection is August 31, 2009.
- OMB Control No. 1210–0124, Acquisition and Sale of Trust REIT Shares by Individual Account Plans Sponsored by Trust REITs (PTE 04–07). The expiration date for this information collection is August 31, 2009.
- OMB Control No. 1210–0058, Prohibited Transaction Class Exemptions for Multiemployer Plans & Multiemployer Apprenticeship Plans, PTEs 76–1, 77–10, 78–6. The expiration date for this information collection is October 31, 2009.

EBSA also notifies the public that the following information collections have been approved by OMB following EBSA's submission of an information collection request (ICR) for revision or change of a prior approval:

- OMB Control No. 1210–0118, Voluntary Fiduciary Correction Program (compliance assistance program). The expiration date for this information collection is May 31, 2009.
- OMB Control No. 1210–0127, Termination of Abandoned Individual Account Plans (final regulations, prohibited transaction class exemption). The expiration date for this information collection is June 30, 2009.
- OMB Control No. 1210–0059, Prohibited Transaction Exemption 86–128. The expiration date for this information collection is August 31, 2008.

The PRA provides that an agency may not conduct or sponsor, and a person is not required to respond to, a collection of information unless it displays a currently valid OMB control number. Publication of this notice satisfies this requirement with respect to the above-listed information collections, as provided in 5 CFR 1320.5(b)(2)(C).

Joseph S. Piacentini,

Director, Office of Policy and Research, Employee Benefits Security Administration.

[FR Doc. E6–18459 Filed 11–1–06; 8:45 am]

BILLING CODE 4510–29–P

NATIONAL ARCHIVES AND RECORDS ADMINISTRATION

Advisory Committee on the Electronic Records Archives

AGENCY: National Archives and Records Administration.

ACTION: Notice of meeting.

SUMMARY: In accordance with the Federal Advisory Committee Act, as amended (5 U.S.C. Appendix 2), the National Archives and Records Administration (NARA) announces a meeting of the Advisory Committee on the Electronic Records Archives (ACERA). The committee serves as a deliberative body to advise the Archivist of the United States, on technical, mission, and service issues related to the Electronic Records Archives (ERA). This includes, but is not limited to, advising and making recommendations to the Archivist on issues related to the development, implementation and use of the ERA system.

Date of Meeting: November 15–16, 2006.

Time of Meeting: 9 a.m.–4 p.m.

Place of Meeting: National Archives at College Park, 8601 Adelphi Road, College Park, MD 20740–6001.

This meeting will be open to the public. However, due to space limitations and access procedures, the name and telephone number of individuals planning to attend must be submitted to the Electronic Records Archives Program at *era.program@nara.gov*.

SUPPLEMENTARY INFORMATION:

Agenda

- Opening Remarks.
- Approval of Minutes.
- Committee Updates.
- Activities Reports.
- Adjournment.

FOR FURTHER INFORMATION CONTACT: Lewis Bellardo, Deputy Archivist/Chief of Staff; (301) 837–1600.

Dated: October 30, 2006.

Mary Ann Hadyka,

Committee Management Office.

[FR Doc. E6–18473 Filed 11–1–06; 8:45 am]

BILLING CODE 7515–01–P

NATIONAL SCIENCE FOUNDATION

Notice of Permit Application Received Under the Antarctic Conservation Act of 1978

AGENCY: National Science Foundation.

ACTION: Notice of permit applications received under the Antarctic Conservation Act.

SUMMARY: Notice is hereby given that the National Science Foundation (NSF) has received a waste management permit application for operation of remote field support camps with emergency provisions for the Expedition Vessel, M/V Discovery for the 2006–2007 season and the one following austral summer. The application is submitted to NSF pursuant to regulations issued under the Antarctic Conservation Act of 1978.

DATES: Interested parties are invited to submit written data, comments, or views with respect to this permit application by December 4, 2006. Permit applications may be inspected by interested parties at the Permit Office, address below.

ADDRESSES: Comments should be addressed to Permit Office, Room 755, Office of Polar Programs, National Science Foundation, 4201 Wilson Boulevard, Arlington, Virginia 22230.

FOR FURTHER INFORMATION CONTACT: Dr. Polly A. Penhale, Environmental Officer, at the above address or (703) 292–8030.

SUPPLEMENTARY INFORMATION: NSF's Antarctic Waste Regulation, 45 CFR Part 671, requires all U.S. citizens and entities to obtain a permit for the use or release of a designated pollutant in Antarctica, and for the release of waste in Antarctica. NSF has received a permit application under this Regulation for the operation of expeditions to Antarctica. During each trip, passengers are taken ashore at selected sites by Zodiac (rubber raft) for approximately two to four hours at a time. On each zodiac landing, emergency gear would be taken ashore in case weather deteriorates and passengers are required to camp on shore. Anything taken ashore will be removed from Antarctica and disposed of in Ushuaia, Argentina, Port Stanley, Falkland Islands, or a substitute port of disembarkation. No hazardous domestic products or wastes (aerosol cans, paints, solvents, etc.) will be brought ashore. Smoke flares and parachute rockets will be used only in an emergency to notify responders. Conditions of the permit would include requirements to report on the removal of materials and any accidental releases, and management of all waste, including human waste, in accordance with Antarctic waste regulations.

Application for the permit is made by: Mark Flager, Vice President, Discovery World Cruises, Inc., 1800 S.E. 10th Avenue, Suite 205, Fort Lauderdale, FL 33316.

Location: Antarctica (south of 60 degrees south latitude).

Dates: November 1, 2006 to March 2, 2008.

Nadene G. Kennedy,

Permit Officer.

[FR Doc. E6–18421 Filed 11–1–06; 8:45 am]

BILLING CODE 7555–01–P

NATIONAL SCIENCE FOUNDATION

Notice of Permit Applications Received Under the Antarctic Conservation Act of 1978 (Pub. L. 95–541)

AGENCY: National Science Foundation.

ACTION: Notice of Permit Applications Received under the Antarctic Conservation Act of 1978, Public Law 95–541.

SUMMARY: The National Science Foundation (NSF) is required to publish notice of permit applications received to conduct activities regulated under the Antarctic Conservation Act of 1978. NSF has published regulations under the Antarctic Conservation Act at Title 45 Part 670 of the Code of Federal Regulations. This is the required notice of permit applications received.

DATES: Interested parties are invited to submit written data, comments, or views with respect to this permit application by December 4, 2006. This application may be inspected by interested parties at the Permit Office, address below.

ADDRESSES: Comments should be addressed to Permit Office, Room 755, Office of Polar Programs, National Science Foundation, 4201 Wilson Boulevard, Arlington, Virginia 22230.

FOR FURTHER INFORMATION CONTACT: Nadene G. Kennedy at the above address or (703) 292–7405.

SUPPLEMENTARY INFORMATION: The National Science Foundation, as directed by the Antarctic Conservation Act of 1978 (Pub. L. 95–541), as amended by the Antarctic Science, Tourism and Conservation Act of 1996, has developed regulations for the establishment of a permit system for various activities in Antarctica and designation of certain animals and certain geographic areas a requiring special protection. The regulations establish such a permit system to designate Antarctic Specially Protected Areas.

The applications received are as follows:

1. *Applicant:* Bruce R. Mate (Permit Application No. 2007–022), Hatfield Marine Science Center, Oregon State University, Newport, OR 97365–5269.

Activity for Which Permit Is Requested: Take, and Import into the

U.S. The applicant proposes to apply Argos satellite-monitored radio tags annually to 24 humpback whales, and, if the opportunity arose, 5 each of blue and fin whales during the next 5 years. The objectives of the proposed research are to: (1) Track whale movements within their feeding habitat during the austral summer; (2) examine the relationship between these movements and available prey distribution information as well as physical and biological oceanographic conditions; and (3) identify migration routes from their summer feeding grounds in the Antarctic Peninsula region to their winter breeding and calving areas. In addition, the applicant will conduct biopsy sampling of all tagged whales for sex determination and genetic analysis. Collected samples will be returned to the United States for further scientific study.

Location: Antarctic Peninsula region.

Dates: January 1, 2007 to January 1, 2012.

Nadene G. Kennedy,

Permit Officer, Office of Polar Programs.

[FR Doc. E6–18460 Filed 11–1–06; 8:45 am]

BILLING CODE 7555–01–P

NUCLEAR REGULATORY COMMISSION

[Docket Nos. 50–387 and 50–388]

Notice of Acceptance for Docketing of the Application, Notice of Opportunity for Hearing and Notice of Intent To Prepare an Environmental Impact Statement and Conduct Scoping Process for Facility Operating License Nos. NPF–14 and NPF–22 for an Additional 20-Year Period PPL Susquehanna LLC., Susquehanna Steam Electric Station, Units 1 and 2

The U.S. Nuclear Regulatory Commission (NRC or the Commission) is considering an application for the renewal of Operating License Nos. NPF–14 and NPF–22, which authorizes PPL Susquehanna LLC. (PPL), to operate the Susquehanna Steam Electric Station (SSES), Units 1 and 2 at 3489 megawatts thermal. The renewed license would authorize the applicant to operate the SSES, Units 1 and 2 for an additional 20 years beyond the period specified in the current license. SSES, Units 1 and 2 are located in Salem Township, Luzerne County, Pennsylvania, approximately five miles northeast of Berwick, Pennsylvania. The current operating licenses for the SSES expire on July 17, 2022, and March 23, 2024, for Units 1 and 2, respectively.

On September 13, 2006, the NRC staff received the application from PPL to renew the Operating License Nos. NPF–14 and NPF–22 for SSES, Units 1 and 2, pursuant to 10 CFR Part 54. A Notice of Receipt and Availability of the license renewal application (LRA) was published in the **Federal Register** on October 2, 2006 (71 FR 58014).

The NRC staff has reviewed the LRA for its acceptability and has determined that PPL has submitted sufficient information in accordance with 10 CFR 54.19, 54.21, 54.22, 54.23, and 51.53(c), and the application is acceptable for docketing. The current Docket Nos. 50–387 and 50–388 for Operating License Nos. NPF–14 and NPF–22 will be retained. The docketing of the renewal application does not preclude requesting additional information as the review proceeds, nor does it predict whether the Commission will grant or deny the application.

Before issuance of each requested renewed license, the NRC will have made the findings required by the Atomic Energy Act of 1954, as amended (the Act), and the Commission's rules and regulations. In accordance with 10 CFR 54.29, the NRC may issue a renewed license on the basis of its review if it finds that actions have been identified and have been or will be taken with respect to: (1) Managing the effects of aging during the period of extended operation on the functionality of structures and components that have been identified as requiring aging management review, and (2) time-limited aging analyses that have been identified as requiring review, such that there is reasonable assurance that the activities authorized by the renewed license will continue to be conducted in accordance with the current licensing basis (CLB), and that any changes made to the plant's CLB comply with the Act and the Commission's regulations. The Commission also must first find that the requirements of Subpart A of 10 CFR 51 have been satisfied, and that matters raised under 10 CFR 2.335 have been addressed.

Within 60 days after the date of publication of this **Federal Register** Notice, the applicant may file a request for a hearing, and any person whose interest may be affected by this proceeding and who wishes to participate as a party in the proceeding must file a written request for a hearing and a petition for leave to intervene with respect to the renewal of the license. Requests for a hearing and a petition for leave to intervene shall be filed in accordance with the Commission's ''Rules of Practice for Domestic Licensing Proceedings'' in 10 CFR part 2.

Interested persons should consult a current copy of 10 CFR 2.309, which is available at the Commission's Public Document Room (PDR), located at One White Flint North, 11555 Rockville Pike, Rockville, Maryland 20852 and is accessible from the Agencywide Documents Access and Management System (ADAMS) Public Electronic Reading Room on the Internet at *http://www.nrc.gov/reading-rm/adams.html*. Persons who do not have access to ADAMS or who encounter problems in accessing the documents located in ADAMS should contact the NRC's PDR reference staff by telephone at 1–800–397–4209, or 301–415–4737, or by e-mail at *pdr@nrc.gov*. If a request for a hearing/petition for leave to intervene is filed within the 60-day period, the Commission or a presiding officer designated by the Commission or by the Chief Administrative Judge of the Atomic Safety and Licensing Board Panel will rule on the request/petition; and the Secretary or the Chief Administrative Judge of the Atomic Safety and Licensing Board will issue a notice of a hearing or an appropriate order. In the event that no request for a hearing/petition for leave to intervene is filed within the 60-day period, the NRC may, upon completion of its evaluations and upon making the findings required under 10 CFR parts 51 and 54, renew the license without further notice.

As required by 10 CFR 2.309, a petition for leave to intervene shall set forth with particularity the interest of the petitioner in the proceeding, and how that interest may be affected by the results of the proceeding, taking into consideration the limited scope of matters that may be considered pursuant to 10 CFR parts 51 and 54. The petition must specifically explain the reasons why intervention should be permitted with particular reference to the following factors: (1) The nature of the requestor's/petitioner's right under the Act to be made a party to the proceeding; (2) the nature and extent of the requestor's/petitioner's property, financial, or other interest in the proceeding; and (3) the possible effect of any decision or order which may be entered in the proceeding on the requestor's/petitioner's interest. The petition must also set forth the specific contentions which the petitioner/requestor seeks to have litigated at the proceeding.

Each contention must consist of a specific statement of the issue of law or fact to be raised or controverted. In addition, the requestor/petitioner shall provide a brief explanation of the bases

of each contention and a concise statement of the alleged facts or the expert opinion that supports the contention on which the requestor/petitioner intends to rely in proving the contention at the hearing. The requestor/petitioner must also provide references to those specific sources and documents of which the requestor/petitioner is aware and on which the requestor/petitioner intends to rely to establish those facts or expert opinion. The requestor/petitioner must provide sufficient information to show that a genuine dispute exists with the applicant on a material issue of law or fact.[1] Contentions shall be limited to matters within the scope of the action under consideration. The contention must be one that, if proven, would entitle the requestor/petitioner to relief. A requestor/petitioner who fails to satisfy these requirements with respect to at least one contention will not be permitted to participate as a party.

The Commission requests that each contention be given a separate numeric or alpha designation within one of the following groups: (1) Technical (primarily related to safety concerns); (2) environmental; or (3) miscellaneous.

As specified in 10 CFR 2.309, if two or more requestors/petitioners seek to co-sponsor a contention or propose substantially the same contention, the requestors/petitioners will be required to jointly designate a representative who shall have the authority to act for the requestors/petitioners with respect to that contention.

Those permitted to intervene become parties to the proceeding, subject to any limitations in the order granting leave to intervene, and have the opportunity to participate fully in the conduct of the hearing. A request for a hearing or a petition for leave to intervene must be filed by: (1) First class mail addressed to the Office of the Secretary of the Commission, U.S. Nuclear Regulatory Commission, Washington, DC, 20555–0001, Attention: Rulemaking and Adjudications Staff; (2) courier, express mail, and expedited delivery services: Office of the Secretary, Sixteenth Floor, One White Flint North, 11555 Rockville Pike, Rockville, Maryland, 20852, Attention: Rulemaking and Adjudications Staff; (3) e-mail addressed to the Office of the Secretary, U.S. Nuclear Regulatory Commission, *HEARINGDOCKET@nrc.gov*; or (4) facsimile transmission addressed to the Office of the Secretary, U.S. Nuclear Regulatory Commission, Washington, DC, Attention: Rulemakings and Adjudications Staff at 301–415–1101, verification number is 301–415–1966.[2] A copy of the request for hearing and petition for leave to intervene must also be sent to the Office of the General Counsel, U.S. Nuclear Regulatory Commission, Washington, DC 20555–0001, and it is requested that copies be transmitted either by means of facsimile transmission to 301–415–3725 or by e-mail to *OGCMailCenter@nrc.gov*. A copy of the request for hearing and petition for leave to intervene should also be sent to the attorney for the applicant, Mr. David Lewis, Pillsbury Winthrop Shaw Pittman LLP, 2300 N Street, NW., Washington, DC 20037.

Non-timely requests and/or petitions and contentions will not be entertained absent a determination by the Commission, the presiding officer, or the Atomic Safety and Licensing Board that the petition, request and/or contentions should be granted based on a balancing of the factors specified in 10 CFR 2.309(a)(1)(i)–(viii).

In addition, the purpose of this notice is to inform the public that the NRC will be preparing an environmental impact statement (EIS) related to the review of the LRA and to provide the public an opportunity to participate in the environmental scoping process, as defined in 10 CFR 51.29. In accordance with 10 CFR 51.95(c), the NRC will prepare an EIS that will be used as a supplement to the Commission's NUREG–1437, ''Generic Environmental Impact Statement for License Renewal of Nuclear Power Plants'' (GEIS), dated May 1996. Pursuant to 10 CFR 51.26, and as part of the environmental scoping process, the NRC staff intends to hold a public scoping meeting. In addition, as outlined in 36 CFR 800.8, ''Coordination with the National Environmental Policy Act,'' the NRC plans to coordinate compliance with Section 106 of the National Historic Preservation Act in meeting the requirements of the National Environmental Policy Act of 1969 (NEPA).

In accordance with 10 CFR 51.53(c) and 10 CFR 54.23, PPL prepared and submitted the Environmental Report (ER) as part of the LRA. The LRA and the ER are publicly available at the NRC's PDR, located at One White Flint North, 11555 Rockville Pike, Rockville, Maryland 20852, or from the NRC's ADAMS. The ADAMS Public Electronic Reading Room is accessible at *http://adamswebsearch.nrc.gov/dologin.htm*. The ADAMS Accession Numbers for the LRA and the ER are ML062630225 and ML062630235, respectively. Persons who do not have access to ADAMS, or who encounter problems in accessing the documents located in ADAMS, should contact the NRC's PDR reference staff by telephone at 1–800–397–4209, or 301–415–4737, or by e-mail at *pdr@nrc.gov*. The LRA and the ER may also be viewed on the Internet at *http://www.nrc.gov/reactors/operating/licensing/renewal/applications/susquehanna.html*. In addition, the LRA and the ER are available for public inspection near the SSES, Units 1 and 2 at the following public library: Berwick Public Library, 205 Chestnut Street, Berwick, Pennsylvania 18603, and the Mill Memorial Library, 495 E. Main Street, Nanticoke, Pennsylvania 18634.

Possible alternatives to the proposed action (license renewal) include no action and reasonable alternative energy sources. The NRC is required by 10 CFR 51.95 to prepare a supplement to the GEIS in connection with the renewal of an operating license. This notice is being published in accordance with 10 CFR 51.26.

The NRC staff will first conduct a scoping process for the supplement to the GEIS and, as soon as practicable thereafter, will prepare a draft supplement to the GEIS for public comment. Participation in the scoping process by members of the public and local, State, Tribal, and Federal Government agencies are encouraged. As described in 10 CFR 51.29, the scoping process for the supplement to the GEIS will be used to accomplish the following:

a. Define the proposed action which is to be the subject of the supplement to the GEIS.

b. Determine the scope of the supplement to the GEIS and identify the significant issues to be analyzed in depth.

c. Identify and eliminate from detailed study those issues that are peripheral or that are not significant.

d. Identify any environmental assessments and other ElSs that are being or will be prepared that are related to, but are not part of, the scope of the supplement to the GEIS being considered.

e. Identify other environmental review and consultation requirements related to the proposed action.

[1] To the extent that the application contains attachments and supporting documents that are not publicly available because they are asserted to contain safeguards or proprietary information, petitioners desiring access to this information should contact the applicant or applicant's counsel to discuss the need for a protective order.

[2] If the request/petition is filed by e-mail or facsimile, an original and two copies of the document must be mailed within 2 (two) business days thereafter to the Secretary, U.S. Nuclear Regulatory Commission, Washington, DC 20555–0001; Attention: Rulemaking and Adjudications Staff.

f. Indicate the relationship between the timing of the preparation of the environmental analyses and the Commission's tentative planning and decision-making schedule.

g. Identify any cooperating agencies and, as appropriate, allocate assignments for preparation and schedules for completing the supplement to the GEIS to the NRC and any cooperating agencies.

h. Describe how the supplement to the GEIS will be prepared, and include any contractor assistance to be used.

The NRC invites the following entities to participate in scoping:

a. The applicant, PPL Susquehanna, LLC.

b. Any Federal agency that has jurisdiction by law or special expertise with respect to any environmental impact involved, or that is authorized to develop and enforce relevant environmental standards.

c. Affected State and local government agencies, including those authorized to develop and enforce relevant environmental standards.

d. Any affected Indian tribe.

e. Any person who requests or has requested an opportunity to participate in the scoping process.

f. Any person who has petitioned or intends to petition for leave to intervene.

In accordance with 10 CFR 51.26, the scoping process for an EIS may include a public scoping meeting to help identify significant issues related to a proposed activity and to determine the scope of issues to be addressed in an EIS. The NRC will hold public meetings for the SSES, Units 1 and 2 license renewal supplement to the GEIS, at the Eagles Building,107 South Market St., Berwick, Pennsylvania, on Wednesday, November 15, 2006. There will be two identical meetings to accommodate interested parties. The first meeting will convene at 1:30 p.m. and will continue until 4:30 p.m., as necessary. The second meeting will convene at 7 p.m. and will continue until 10 p.m., as necessary. Both meetings will be transcribed and will include: (1) An overview by the NRC staff of the NRC's license renewal review process; (2) an overview by the NRC staff of the NEPA environmental review process, the proposed scope of the supplement to the GEIS, and the proposed review schedule; and (3) the opportunity for interested government agencies, organizations, and individuals to submit comments or suggestions on the environmental issues or the proposed scope of the supplement to the GEIS. Additionally, the NRC staff will host informal discussions one hour prior to the start of each session at the same location. No formal comments on the proposed scope of the supplement to the GEIS will be accepted during the informal discussions. To be considered, comments must be provided either at the transcribed public meetings or in writing, as discussed below. For more information about the proposed action, the scoping process, and the EIS, please contact the NRC Environmental Project Manager, Mrs. Alicia Mullins, at Mail Stop O–11F1, U.S. Nuclear Regulatory Commission, Washington, DC 20555, by telephone at 1–800–368–5642, extension 1224, or by e-mail at *axm7@nrc.gov.* Persons may register to attend or present oral comments at the meetings on the scope of the NEPA review by contacting Mrs. Mullins. Members of the public may also register to speak at the meeting within 15 minutes of the start of each meeting. Individual oral comments may be limited by the time available, depending on the number of persons who register. Members of the public who have not registered may also have an opportunity to speak, if time permits. Public comments will be considered in the scoping process for the supplement to the GEIS. Mrs. Mullins will need to be contacted no later than November 6, 2006, if special equipment or accommodations are needed to attend or present information at the public meeting, so that the NRC staff can determine whether the request can be accommodated.

Members of the public may send written comments on the environmental scope of the SSES, Units 1 and 2 license renewal review to: Chief, Rules and Directives Branch, Division of Administrative Services, Office of Administration, Mail Stop T–6D59, U.S. Nuclear Regulatory Commission, Washington, DC 20555–0001, and should cite the publication date and page number of this **Federal Register** notice. Comments may also be delivered to the U.S. Nuclear Regulatory Commission, Mail Stop T–6D59, Two White Flint North, 11545 Rockville Pike, Rockville, Maryland, 20852, from 7:30 a.m. to 4:15 p.m. during Federal workdays. To be considered in the scoping process, written comments should be postmarked by December 18, 2006. Electronic comments may be sent by e-mail to the NRC at *SusquehannaEIS@nrc.gov,* and should be sent no later than December 18, 2006, to be considered in the scoping process. Comments will be available electronically and accessible through ADAMS.

Participation in the scoping process for the supplement to the GEIS does not entitle participants to become parties to the proceeding to which the supplement to the GEIS relates. Matters related to participation in any hearing are outside the scope of matters to be discussed at this public meeting.

At the conclusion of the scoping process, the NRC will prepare a concise summary of the determination and conclusions reached, including the significant issues identified, and will send a copy of the summary to each participant in the scoping process. The summary will also be available for viewing in ADAMS. The staff will then prepare and issue for comment the draft supplement to the GEIS, which will be the subject of separate notices and separate public meetings. Copies will be available for public viewing at the above-mentioned addresses, and one copy per request will be provided free of charge, to the extent of supply. After receipt and consideration of the comments, the NRC will prepare a final supplement to the GEIS, which will also be available for public viewing.

Information about the proposed action, the supplement to the GEIS, and the scoping process may be obtained from Mrs. Mullins at the aforementioned telephone number or e-mail address.

Dated at Rockville, Maryland, this 26th day of October 2006.

For The Nuclear Regulatory Commission.

Frank P. Gillespie,

Director, Division of License Renewal, Office of Nuclear Reactor Regulation.

[FR Doc. E6–18466 Filed 11–1–06; 8:45 am]

BILLING CODE 7590–01–P

NUCLEAR REGULATORY COMMISSION

Advisory Committee on Nuclear Waste; Notice of Meeting

The Advisory Committee on Nuclear Waste (ACNW) will hold its 174th meeting on November 13–16, 2006, Room T–2B3, 11545 Rockville Pike, Rockville, Maryland.

The schedule for this meeting is as follows:

Monday, November 13, 2006

10 a.m.–10:05 a.m.: Opening Remarks by the ACNW Chairman (Open)—The ACNW Chairman, Dr. Michael Ryan, will make opening remarks regarding the conduct of today's sessions.

10:05 a.m.–12 p.m.: Update on Status of Seismic Design Bases and Methodology: NRC Perspective (Open)—Staff representatives from the NRC Office of Nuclear Material Safety and Safeguards (NMSS) will brief the

Committee on seismic issues and review methodologies for both pre- and post-closure phases of the Yucca Mountain repository operation.

1 p.m.–2:30 p.m.: Results from the Liquid Radioactive Release Lessons Learned Task Force—A representative from the NRC Office of Nuclear Reactor Regulation (NRR) will brief the Committee on the results from the recently completed report from the Liquid Radioactive Release Lessons Learned Task Force.

2:30 p.m.–5:30 p.m.: Preparation for Meeting with NRC Commissioners (Open)—The Committee will discuss topics of mutual interest in preparation for ACNW meeting with the NRC Commissioners that is scheduled for Thursday, December 14, 2006. There may be a 15 minute break at some point during this activity.

Tuesday, November 14, 2006

ACNW Working Group Meeting on Decommissioning Lessons Learned (Open)

8:30 a.m.–8:45 a.m.: Opening Remarks and Introductions (Open)—The ACNW Chairman will make opening remarks regarding the conduct of today's sessions. ACNW Member Dr. James Clarke will provide an overview of the Working Group Meeting (WGM), including the meeting purpose and scope, and introduce invited subject matter experts.

Session I: Decommissioning Lessons Learned

8:45 a.m.–11:30 a.m.: Representatives from the Nuclear Energy Institute, the Fuel Cycle Facilities Forum, the Argonne National Laboratory, and the Army Corps of Engineers will discuss their lessons learned in decommissioning of facilities.

11:30 a.m.–12:30 p.m.: Session I Panel Discussion—Committee Member Clarke will lead a panel discussion with the invited subject matter experts on decommissioning lessons learned.

Session II: Implementing Decommissioning Lessons Learned in NRC Rules And Guidance

1:30 p.m.–4 p.m.: A representative from the Kansas Department of Health and Environment will discuss decommissioning lessons learned from an Agreement State perspective. Staff representatives from NRR and the NRC Office of Federal and State Materials and Environmental Management Programs (FSME) will discuss decommissioning lessons learned efforts within NRC and implementation of selected decommissioning lessons learned in NRC rules and guidance.

4:15 p.m.–5:15 p.m.: Session II Panel Discussion—Committee Member Clarke will lead a panel discussion with the invited subject matter experts on implementing decommissioning lessons learned in NRC rules and guidance.

5:15 p.m.–5:30 p.m.: Wrap Up—ACNW Member Dr. James Clarke will provide a summary of the Working Group Meeting, including a discussion of a possible letter report to the Commission.

Wednesday, November 15, 2006

8:30 a.m.–8:35 a.m.: Opening Remarks by the ACNW Chairman (Open)—The Chairman will make opening remarks regarding the conduct of today's sessions.

8:35 a.m.–12:30 p.m.: Dose Effect Relationships and Estimation of the Carcinogenic Effects of Low Doses of Ionizing Radiation (Open)—French scientists will brief the ACNW regarding the content of the recent report by the French Academy of Sciences and National Academy of Medicine. There may be a 15 minute break at some point during this presentation.

1:30 p.m.–4 p.m.: White Paper on Potential Advanced Fuel Cycles (Open)—The draft ACNW white paper on spent nuclear fuel recycling will be discussed. This paper focuses on various known reprocessing methods and their resulting effluents and waste. Licensing of a new reprocessing facility will also be addressed.

4:15 p.m.–5:30 p.m.: Discussion of Draft ACNW Letter Reports (Open)—The Committee will discuss potential and proposed ACNW letter reports.

Thursday, November 16, 2006

8:30 a.m.–8:35 a.m.: Opening Remarks by the ACNW Chairman (Open)—The Chairman will make opening remarks regarding the conduct of today's sessions.

8:35 a.m.–10 a.m.: Proposed Revision to Regulatory Guide 1.112, Calculation of Releases of Radioactive Materials in Gaseous and Liquid Effluents from Light-Water-Cooled Reactors (Open)—Staff representatives from the NRC Office of Nuclear Regulatory Research (RES) will brief the Committee on the proposed modifications to Regulatory Guide 1.112 in support of new reactor licensing.

10:15 a.m.–11:45 a.m.: Proposed Revision to Regulatory Guide 4.15, Quality Assurance for Radiological Monitoring Programs (Inception Through Normal Operations to License Termination)—Effluent Streams and the Environment (Open)—RES representatives will brief the Committee on the proposed revision to Regulatory Guide 4.15 in support of new reactor licensing.

1 p.m.—3 p.m.: Discussion of Potential ACNW Letter Reports (Open)—The Committee will discuss potential and proposed ACNW letter reports.

3:15 p.m.–5 p.m.: Miscellaneous (Open)—The Committee will discuss matters related to the conduct of ACNW activities and specific issues that were not completed during previous meetings, as time and availability of information permit. Discussions may include future Committee Meetings.

Procedures for the conduct of and participation in ACNW meetings were published in the **Federal Register** on October 12, 2006 (71 FR 60196). In accordance with these procedures, oral or written statements may be presented by members of the public. Electronic recordings will be permitted only during those portions of the meeting that are open to the public. Persons desiring to make oral statements should notify Mr. Antonio F. Dias (Telephone 301–415–6805), between 8:15 a.m. and 5 p.m. ET, as far in advance as practicable so that appropriate arrangements can be made to schedule the necessary time during the meeting for such statements. Use of still, motion picture, and television cameras during this meeting will be limited to selected portions of the meeting as determined by the ACNW Chairman. Information regarding the time to be set aside for taking pictures may be obtained by contacting the ACNW office prior to the meeting. In view of the possibility that the schedule for ACNW meetings may be adjusted by the Chairman as necessary to facilitate the conduct of the meeting, persons planning to attend should notify Mr. Dias as to their particular needs.

Further information regarding topics to be discussed, whether the meeting has been canceled or rescheduled, the Chairman's ruling on requests for the opportunity to present oral statements and the time allotted, therefore can be obtained by contacting Mr. Dias.

ACNW meeting agenda, meeting transcripts, and letter reports are available through the NRC Public Document Room (PDR) at *pdr@nrc.gov*, or by calling the PDR at 1–800–397–4209, or from the Publicly Available Records System component of NRC's document system (ADAMS) which is accessible from the NRC Web site at *http://www.nrc.gov/reading-rm/adams.html* or *http://www.nrc.gov/reading-rm/doc-collections/* (ACRS & ACNW Mtg schedules/agendas).

Video Teleconferencing service is available for observing open sessions of ACNW meetings. Those wishing to use

this service for observing ACNW meetings should contact Mr. Theron Brown, ACNW Audiovisual Technician (301–415–8066), between 7:30 a.m. and 3:45 p.m. ET, at least 10 days before the meeting to ensure the availability of this service. Individuals or organizations requesting this service will be responsible for telephone line charges and for providing the equipment and facilities that they use to establish the video teleconferencing link. The availability of video teleconferencing services is not guaranteed.

Dated: October 27, 2006.

Annette L. Vietti-Cook,

Secretary of the Commission.

[FR Doc. E6–18468 Filed 11–1–06; 8:45 am]

BILLING CODE 7590–01–P

NUCLEAR REGULATORY COMMISSION

Advisory Committee on Nuclear Waste Meeting on Planning and Procedures; Notice of Meeting

The Advisory Committee on Nuclear Waste (ACNW) will hold a Planning and Procedures meeting on November 13, 2006, Room T–2B1, 11545 Rockville Pike, Rockville, Maryland. The entire meeting will be open to public attendance, with the exception of a portion that may be closed pursuant to 5 U.S.C. 552b (c) (2) and (6) to discuss organizational and personnel matters that relate solely to internal personnel rules and practices of ACNW, and information the release of which would constitute a clearly unwarranted invasion of personal privacy.

The agenda for the subject meeting shall be as follows:

Monday, November 13, 2006—8:30 a.m.–9:30 a.m.

The Committee will discuss proposed ACNW activities and related matters. The purpose of this meeting is to gather information, analyze relevant issues and facts, and formulate proposed positions and actions, as appropriate, for deliberation by the full Committee.

Members of the public desiring to provide oral statements and/or written comments should notify the Designated Federal Official, Mr. Antonio F. Dias (*Telephone:* 301/415–6805) between 8:15 a.m. and 5 p.m. (ET) five days prior to the meeting, if possible, so that appropriate arrangements can be made. Electronic recordings will be permitted only during those portions of the meeting that are open to the public.

Further information regarding this meeting can be obtained by contacting the Designated Federal Official between 8:15 a.m. and 5 p.m. (ET). Persons planning to attend this meeting are urged to contact the above named individual at least two working days prior to the meeting to be advised of any potential changes in the agenda.

Dated: October 26, 2006.

Michael R. Snodderly,

Branch Chief, ACRS/ACNW.

[FR Doc. E6–18469 Filed 11–1–06; 8:45 am]

BILLING CODE 7590–01–P

NUCLEAR REGULATORY COMMISSION

Advisory Committee on Reactor Safeguards Subcommittee Meeting on Future Plant Designs; Notice of Meeting

The ACRS Subcommittee on Future Plant Designs will hold a meeting on November 30, 2006, Room T–2B3, 11545 Rockville Pike, Rockville, Maryland.

The entire meeting will be open to public attendance.

The agenda for the subject meeting shall be as follows:

Thursday, November 30, 2006—8:30 a.m. until the conclusion of business.

The Subcommittee will summarize and discuss the technical content of Draft Regulatory Guide DG–1145, ''Combined License Applications for Nuclear Power Plants (LWR Edition),'' public comments on DG–1145, and public comment resolution. Certain sections of DG–1145 will be discussed in greater detail. The Subcommittee will gather information, analyze relevant issues and facts, and formulate proposed positions and actions, as appropriate, for deliberation by the full Committee.

Members of the public desiring to provide oral statements and/or written comments should notify the Designated Federal Official, Mr. David C. Fischer (telephone 301–415–6889) between 7:30 a.m. and 5 p.m. (ET) five days prior to the meeting, if possible, so that appropriate arrangements can be made. Electronic recordings will be permitted.

Further information regarding this meeting can be obtained by contacting the Designated Federal Official between 7:30 a.m. and 5 p.m. (ET). Persons planning to attend this meeting are urged to contact the above named individual at least two working days prior to the meeting to be advised of any potential changes to the agenda.

Dated: October 26, 2006.

Michael R. Snodderly,

Branch Chief, ACRS/ACNW.

[FR Doc. E6–18467 Filed 11–1–06; 8:45 am]

BILLING CODE 7590–01–P

RAILROAD RETIREMENT BOARD

Agency Forms Submitted for OMB Review, Request for Comments

Summary: In accordance with the Paperwork Reduction Act of 1995 (44 U.S.C. Chapter 35), the Railroad Retirement Board (RRB) is forwarding an Information Collection Request (ICR) to the Office of Information and Regulatory Affairs (OIRA), Office of Management and Budget (OMB) to request an extension of its approval for the following collection of information: 3220–0141, Vocational Report, consisting of RRB Form G–251, Vocational Report. Our ICR describes the information we seek to collect from the public. Review and approval by OIRA ensures that we impose appropriate paperwork burdens.

The RRB invites comments on the proposed collection of information to determine (1) the practical utility of the collection; (2) the accuracy of the estimated burden of the collection; (3) ways to enhance the quality, utility and clarity of the information that is the subject of collection; and (4) ways to minimize the burden of collections on respondents, including the including the use of automated collection techniques or other forms of information technology. Comments to RRB or OIRA must contain the OMB control number of the ICR. For proper consideration of your comments, it is best if RRB and OIRA receive them within 30 days of publication date.

Previous Requests for Comments: The RRB has already published the initial 60-day notice (71 FR 43824 on August 2, 2006) required by 44 U.S.C. 3506(c)(2). That request elicited no comments.

Information Collection Request (ICR)

Title: Vocational Report.

OMB Control Number: 3220–0141.

Form(s) submitted: G–251, Vocational Report.

Type of request: Extension of a currently approved collection.

Affected public: Individuals or households.

Abstract: Section 2 of the Railroad Retirement Act provides for the payment of disability annuities to qualified employees and widower(s). In order to determine the effect of a disability on an applicant's ability to

work, the RRB needs the applicants work history. The collection obtains the information needed to determine their ability to work.

The burden estimate for this ICR is unchanged as follows:

Estimated annual number of respondents: 6,000.

Total annual responses: 6,000.

Total annual reporting hours: 3,045.

For Further Information Contact: Copies of the form and supporting documents can be obtained from Charles Mierzwa, the agency clearance officer at (312–751–3363) or *Charles.Mierzwa@rrb.gov.*

Comments: Comments regarding the information collection should be addressed to Ronald J. Hodapp, Railroad Retirement Board, 844 North Rush Street, Chicago, Illinois 60611–2092 or *Ronald.Hodapp@rrb.gov* and to the OMB Desk Officer for the RRB, Karen Matsuoka at *kmatsuoka@omb.eop.gov,* FAX (202) 395–6974.

Charles Mierzwa,

RRB Clearance Officer.

[FR Doc. E6–18448 Filed 11–1–06; 8:45 am]

BILLING CODE 7905–01–P

SECURITIES AND EXCHANGE COMMISSION

[Release No. IC–27541]

Notice of Applications for Deregistration Under Section 8(f) of the Investment Company Act of 1940

October 27, 2006.

The following is a notice of applications for deregistration under section 8(f) of the Investment Company Act of 1940 for the month of October 2006. A copy of each application may be obtained for a fee at the SEC's Public Reference Branch (tel. 202–551–5850). An order granting each application will be issued unless the SEC orders a hearing. Interested persons may request a hearing on any application by writing to the SEC's Secretary at the address below and serving the relevant applicant with a copy of the request, personally or by mail. Hearing requests should be received by the SEC by 5:30 p.m. on November 17, 2006, and should be accompanied by proof of service on the applicant, in the form of an affidavit or, for lawyers, a certificate of service. Hearing requests should state the nature of the writer's interest, the reason for the request, and the issues contested. Persons who wish to be notified of a hearing may request notification by writing to the Secretary, U.S. Securities and Exchange Commission, 100 F Street, NE., Washington, DC 20549–1090.

FOR FURTHER INFORMATION CONTACT: Diane L. Titus at (202) 551–6810, SEC, Division of Investment Management, Office of Investment Company Regulation, 100 F Street, NE., Washington, DC 20549–4041.

Pebblebrook Fund Inc. [File No. 811–21297]

Summary: Applicant seeks an order declaring that it has ceased to be an investment company. On June 15, 2006, applicant made a liquidating distribution to its shareholders, based on net asset value. Applicant incurred no expenses in connection with the liquidation.

Filing Dates: The application was filed on August 2, 2006, and amended on August 30, 2006 and October 24, 2006.

Applicant's Address: 13047 Pebblebrook Dr., Houston, TX 77079.

AllianceBernstein Multi-Market Strategy Trust, Inc. [File No. 811–6251]

Summary: Applicant seeks an order declaring that it has ceased to be an investment company. By August 4, 2006, applicant had made a liquidating distribution to all shareholders, based on net asset value. Expenses of $25,923 incurred in connection with the liquidation were paid by AllianceBernstein L.P., applicant's investment adviser.

Filing Dates: The application was filed on August 29, 2006, and amended on October 6, 2006.

Applicant's Address: 1345 Avenue of the Americas, New York, NY 10105.

Evergreen Fund [File No. 811–2193]

Evergreen Foundation Trust [File No. 811–5953]

Summary: Each applicant seeks an order declaring that it has ceased to be an investment company. On or about December 22, 1997, each applicant transferred its assets to a corresponding, newly-created series of Evergreen Equity Trust, based on net asset value. Expenses incurred in connection with the reorganizations were paid by applicants.

Filing Date: The applications were filed on October 5, 2006.

Applicants' Address: 200 Berkeley St., Boston, MA 02116.

The Brazil Fund, Inc. [File No. 811–5269]

Summary: Applicant, a closed-end investment company, seeks an order declaring that it has ceased to be an investment company. On June 9, 2006, applicant made a liquidating distribution to shareholders, based on net asset value. Expenses of $493,407 incurred in connection with the liquidation were paid by applicant. Applicant has retained $2,954,219 in cash to pay outstanding liabilities and expenses.

Filing Dates: The application was filed on July 28, 2006, and amended on October 13, 2006.

Applicant's Address: 345 Park Ave., New York, NY 10154.

Scudder Portfolios [File No. 811–3440]

Summary: Applicant seeks an order declaring that it has ceased to be an investment company. On September 17, 2005, applicant transferred its assets to DWS Cash Investment Trust (formerly, Scudder Cash Investment Trust), based on net asset value. Expenses of $220,718 incurred in connection with the reorganization were paid by Deutsche Investment Management Americas, Inc., applicant's investment adviser.

Filing Dates: The application was filed on July 6, 2006, and amended on October 3, 2006.

Applicant's Address: 222 South Riverside Plaza, Chicago, IL 60606.

Scudder Investors Portfolio Trust [File No. 811–8375]

Summary: Applicant seeks an order declaring that it has ceased to be an investment company. On August 20, 2004, applicant made a liquidating distribution to its shareholders, based on net asset value. Expenses of $32,083 incurred in connection with the liquidation were paid by Investment Company Capital Corp., applicant's investment adviser.

Filing Dates: The application was filed on June 29, 2006, and amended on October 3, 2006.

Applicant's Address: P O Box 501 Cardinal Ave., Grand Cayman, Cayman Island BWI.

Wilmington Low Volatility Fund of Funds [File No. 811–21412]

Summary: Applicant, a closed-end investment company, seeks an order declaring that it has ceased to be an investment company. On December 22, 2005, applicant made a liquidating distribution to its shareholders, based on net asset value. Expenses of $3,000 incurred in connection with the liquidation were paid by Rodney Square Management Corporation, applicant's investment adviser and sponsor.

Filing Dates: The application was filed on August 29, 2006, and amended on September 29, 2006.

Applicant's Address: 1100 North Market, Wilmington, DE 19890.

Core Trust (DE) [File No. 811–8858]

Summary: Applicant, a master fund in a master-feeder structure, seeks an order declaring that it has ceased to be an investment company. On June 9, 2003, each feeder fund of applicant made a liquidating withdrawal of its interest in applicant's corresponding portfolio, based on net asset value. Applicant incurred no expenses in connection with the liquidation.

Filing Dates: The application was filed on June 8, 2006, and amended on August 21, 2006, and October 6, 2006.

Applicant's Address: Two Portland Sq., Portland, ME 04101.

Mezzacappa Multi-Strategy Fund, LLC [File No. 811–21415]

Mezzacappa Multi-Strategy Plus Fund, LLC [File No. 811–21468]

Summary: Each applicant, a closed-end management company, seeks an order declaring that it has ceased to be an investment company. Applicants have never made a public offering of their securities and do not propose to make a public offering or engage in business of any kind.

Filing Dates: The applications were filed on December 13, 2004, and amended on October 11, 2006.

Applicants' Address: 630 Fifth Ave., New York, NY 10111.

Liberty Variable Investment Trust [File No. 811–7556]

Summary: Applicant seeks an order declaring that it has ceased to be an investment company. On May 11, 2005, Applicant's board of directors approved the merger of Applicant and Columbia Variable Insurance Trust. Applicant distributed its assets on May 1, 2006, pursuant to the merger. In connection with the merger, the Applicant and its advisor, Columbia Management Advisors, each paid 75% and 25% respectively of the following expenses: legal expenses of $73,576.00 and SEC registration fees of $136,561.00.

Filing Dates: The application was filed on June 23, 2006, and amended on July 18, 2006.

Applicant's Address: One Financial Center, Boston, Massachusetts 02111.

Northstar Life Variable Universal Life Account [811–9807]

Summary: Applicant, a separate account for variable annuities, seeks an order declaring that it has ceased to be an investment company. On December 27, 2005, Applicant made a liquidating distribution to its sole shareholder, Northstar Life Insurance Company, based on net asset value. Expenses of $2500 incurred in connection with the liquidation were paid by Northstar Life Insurance Company, which is also the depositor of the separate account. Applicant has never had any contractowners invested in the separate account.

Filing Dates: The application was filed on April 24, 2006, and amended on October 17, 2006.

Applicant's Address: Northstar Life Insurance Company, The Trebloc Building, 301 East State Street, Ithaca, New York 14850.

Allstate Life of New York Variable Account II [File No. 811–6117]

Summary: Applicant seeks an order declaring that it has ceased to be an investment company. On March 26, 2004, the board of directors approved applicant's merger with another fund. The fund surviving the merger is the Allstate Life of New York Separate Account A. Allstate Life Insurance Company of New York, the depositor, paid expenses of $1,500 incurred in connection with the merger.

Filing Date: The application was filed on October 11, 2006.

Applicant's Address: 100 Motor Parkway, Hauppauge, NY 11788.

Allstate Life Insurance Company Separate Account A [File No. 811–9227]

Summary: Applicant seeks an order declaring that it has ceased to be an investment company. On March 12, 2004, the board of directors approved applicant's merger with another fund. The fund surviving the merger is the Allstate Financial Advisors Separate Account I. Allstate Life Insurance Company, the depositor, paid expenses of $1,500 incurred in connection with the merger.

Filing Date: The application was filed on October 11, 2006.

Applicant's Address: 3100 Sanders Road, Northbrook, Illinois 60062.

Allstate Life of New York Variable Annuity Account [File No. 811–5789]

Summary: Applicant seeks an order declaring that it has ceased to be an investment company. On March 26, 2004, the board of directors approved applicant's merger with another fund. The fund surviving the merger is the Allstate Life of New York Separate Account A. Allstate Life Insurance Company of New York, the depositor, paid expenses of $1,500 incurred in connection with the merger.

Filing Date: The application was filed on October 11, 2006.

Applicant's Address: 100 Motor Parkway, Hauppauge, NY 11788.

Glenbrook Life Scudder Variable Account A [File No. 811–8911]

Summary: Applicant seeks an order declaring that it has ceased to be an investment company. On March 10, 2004, the board of directors approved applicant's merger with another fund. The fund surviving the merger is the Glenbrook Life Multi-Manager Variable Account. Glenbrook Life and Annuity Company, the depositor, paid expenses of $1,500 incurred in connection with the merger.

Filing Date: The application was filed on October 11, 2006.

Applicant's Address: 3100 Sanders Road, Northbrook, Illinois 60062.

Glenbrook Life AIM Variable Life Separate Account A [File No. 811–8175]

Summary: Applicant seeks an order declaring that it has ceased to be an investment company. On March 10, 2004, the board of directors approved applicant's merger with another fund. The fund surviving the merger is the Glenbrook Life Variable Life Separate Account A. Glenbrook Life and Annuity Company, the depositor, paid expenses of $1,500 incurred in connection with the merger.

Filing Date: The application was filed on October 11, 2006.

Applicant's Address: 3100 Sanders Road, Northbrook, Illinois 60062.

Glenbrook Life and Annuity Account [File No. 811–7632]

Summary: Applicant seeks an order declaring that it has ceased to be an investment company. On March 10, 2004, the board of directors approved applicant's merger with another fund. The fund surviving the merger is the Glenbrook Multi-Manager Variable Account. Glenbrook Life and Annuity Company, the depositor, paid expenses of $1,500 incurred in connection with the merger.

Filing Date: The application was filed on October 11, 2006.

Applicant's Address: 3100 Sanders Road, Northbrook, Illinois 60062.

Glenbrook Life Variable Separate Account A [File No. 811–7825]

Summary: Applicant seeks an order declaring that it has ceased to be an investment company. On July 28, 2004, and August 4, 2004, the boards of directors of Allstate Life Insurance Company (''Allstate'') and Glenbrook Life and Annuity Company (''Glenbrook''), respectively, in connection with the merger of Glenbrook into Allstate, determined that efficiency could be improved if the applicant was merged into the Allstate Financial Advisors Separate Account I.

Glenbrook paid expenses of $1,500 incurred in connection with the merger.

Filing Date: The application was filed on October 11, 2006.

Applicant's Address: 3100 Sanders Road, Northbrook, Illinois 60062.

Glenbrook Life Multi-Manager Variable Account [File No. 811–7541]

Summary: Applicant seeks an order declaring that it has ceased to be an investment company. On July 28, 2004, and August 4, 2004, the boards of directors of Allstate Life Insurance Company (''Allstate'') and Glenbrook Life and Annuity Company (''Glenbrook''), respectively, in connection with the merger of Glenbrook into Allstate, determined that efficiency could be improved if the applicant was merged into the Allstate Financial Advisors Separate Account I. Glenbrook paid expenses of $1,500 incurred in connection with the merger.

Filing Date: The application was filed on October 11, 2006.

Applicant's Address: 3100 Sanders Road, Northbrook, Illinois 60062.

Glenbrook Life and Annuity Company Separate Account A [File No. 811–7351]

Summary: Applicant seeks an order declaring that it has ceased to be an investment company. On July 28, 2004, and August 4, 2004, the boards of directors of Allstate Life Insurance Company (''Allstate'') and Glenbrook Life and Annuity Company (''Glenbrook''), respectively, in connection with the merger of Glenbrook into Allstate, determined that efficiency could be improved if the applicant was merged into the Allstate Financial Advisors Separate Account I. Glenbrook paid expenses of $1,500 incurred in connection with the merger.

Filing Date: The application was filed on October 11, 2006.

Applicant's Address: 3100 Sanders Road, Northbrook, Illinois 60062.

Northbrook Variable Annuity Account [File No. 811–3688]

Summary: Applicant seeks an order declaring that it has ceased to be an investment company. On July 30, 2002, the board of directors approved applicant's merger with another fund. The fund surviving the merger is the Allstate Financial Advisors Separate Account I. Northbrook Life Insurance Company, the depositor, paid expenses of $1,500 incurred in connection with the merger.

Filing Date: The application was filed on October 11, 2006.

Applicant's Address: 3100 Sanders Road, Northbrook, Illinois 60062.

Northbrook Variable Annuity Account II [File No. 811–6116]

Summary: Applicant seeks an order declaring that it has ceased to be an investment company. On July 30, 2002, the board of directors approved applicant's merger with another fund. The fund surviving the merger is the Allstate Financial Advisors Separate Account I. Northbrook Life Insurance Company, the depositor, paid expenses of $1,500 incurred in connection with the merger.

Filing Date: The application was filed on October 11, 2006.

Applicant's Address: 3100 Sander Road, Northbrook, Illinois 60062.

For the Commission, by the Division of Investment Management, pursuant to delegated authority.

Nancy M. Morris,

Secretary.

[FR Doc. E6–18474 Filed 11–1–06; 8:45 am]

BILLING CODE 8011–01–P

SECURITIES AND EXCHANGE COMMISSION

[Release No. 34–54658; File No. SR–Amex–2006–82]

Self-Regulatory Organizations; American Stock Exchange LLC; Notice of Filing of Proposed Rule Change and Amendment No. 1 Thereto Relating to MACRO Tradeable Shares

October 26, 2006.

Pursuant to section 19(b)(1) of the Securities Exchange Act of 1934 (''Act'') [1] and Rule 19b–4 [2] thereunder, notice is hereby given that on August 23, 2006, the American Stock Exchange LLC (''Amex'' or ''Exchange'') filed with the Securities and Exchange Commission (''SEC'' or ''Commission'') the proposed rule change as described in Items I, II, and III below, which Items have been prepared by the Exchange. On October 20, 2006, Amex filed Amendment No. 1 to the proposed rule change.[3] The Commission is publishing this notice to solicit comments on the proposed rule change, as amended, from interested persons.

I. Self-Regulatory Organization's Statement of the Terms of Substance of the Proposed Rule Change

The Amex proposes to list and trade under new Amex Rules 1400 et seq. (1) Claymore MACROshares Oil Up Tradeable Shares (the ''Up-MACRO [4] Tradeable Shares'') and (2) Claymore MACROshares Oil Down Tradeable Shares (the ''Down-MACRO Tradeable Shares'' and together with the Up-MACRO Tradeable Shares, the ''MACRO Tradeable Shares'').

The text of the proposed rule change, as amended, is available on the Amex's Web site (*http://www.Amex.com*), at the Amex's Office of the Secretary, and at the Commission's public reference room. The text of Exhibit 5 to the proposed rule change, as amended, is also available on the Commission's Web site (*http://www.sec.gov/rules/sro/shtml*).

II. Self-Regulatory Organization's Statement of the Purpose of, and Statutory Basis for, the Proposed Rule Change

In its filing with the Commission, the Amex included statements concerning the purpose of and basis for the proposed rule change, as amended. The text of these statements may be examined at the places specified in Item IV below. The Amex has prepared summaries, set forth in sections A, B, and C below, of the most significant aspects of such statements.

A. Self-Regulatory Organization's Statement of the Purpose of, and Statutory Basis for, the Proposed Rule Change

1. Purpose

The Exchange proposes to add new section 1400 *et seq.* for the purpose of permitting the listing and trading of securities issued by a pair of related trusts and based on an index or other numerical variable (''Reference Price'') whose value reflects the value of assets, prices, or other economic interests. In particular, the Amex initially proposes to list securities issued by (1) the Claymore MACROshares Oil Up Tradeable Trust (the ''Up-MACRO Tradeable Trust'') and (2) the Claymore MACROshares Oil Down Tradeable Trust (the ''Down-MACRO Tradeable Trust'' and together with the Up-MACRO Tradeable Trust, the ''MACRO Tradeable Trusts''). Each of these securities represents an undivided beneficial interest in the respective MACRO Tradeable Trust.

The assets of the Up-MACRO Tradeable Trust will consist exclusively of a majority of the Claymore MACROshares Oil Up Holding Shares (''Up-MACRO Holding Shares'') issued by the Claymore MACROshares Oil Up Holding Trust (''Up-MACRO Holding

[1] 15 U.S.C. 78s(b)(1).

[2] 17 CFR 240.19b–4.

[3] Amendment No. 1 supersedes and replaces the original filing in its entirety.

[4] MACRO® is a federally-registered servicemark of MacroMarkets LLC (''MacroMarkets'').

Trust''). ''Quarterly Income Distributions,'' ''Redemption Distributions,'' and ''Final Distributions,'' as described below, on the Up-MACRO Holding Shares held by the Up-MACRO Tradeable Trust will be based on the ''underlying value'' of the Up-MACRO Holding Trust on specified dates (which underlying value will increase or decrease in proportion to fluctuations in the ''Applicable Reference Price of Crude Oil,'' as defined herein, above or below its starting level) and will be passed through to the holders of the Up-MACRO Tradeable Shares. If the Applicable Reference Price of Crude Oil rises above its starting level, the Up-MACRO Holding Trust's underlying value will increase proportionately to include all of its assets plus an obligation of the Down-MACRO Holding Trust (as defined below) to transfer a portion of its assets. Conversely, if the level of the Applicable Reference Price of Crude Oil falls below its starting level, the Up-MACRO Holding Trust's underlying value will decrease proportionately because an obligation to transfer a portion of the Up-MACRO Holding Trust's assets will be included in the calculation of the underlying value of the Down-MACRO Holding Trust. The Applicable Reference Price of Crude Oil is the settlement price of the NYMEX Division of the New York Mercantile Exchange, Inc. (''NYMEX'') light sweet crude oil futures contract of the ''designated maturity'' (as defined below), as established and reported by NYMEX on a per barrel basis in U.S. dollars at the end of each ''Price Determination Day'' (as defined below).

Similarly, the assets of the Down-MACRO Tradeable Trust will consist exclusively of a majority of the Claymore MACROshares Oil Down Holding Shares (''Down-MACRO Holding Shares'' and together with the Up-MACRO Holding Shares, the ''MACRO Holding Shares'') issued by the Claymore MACROshares Oil Down Holding Trust (''Down-MACRO Holding Trust'' and together with the Up-MACRO Holding Trust, the ''MACRO Holding Trusts''). Quarterly Income Distributions, Redemption Distributions and Final Distributions, as described below, on the Down-MACRO Holding Shares held by the Down-MACRO Tradeable Trust will be based on the ''underlying value'' of the Down-MACRO Holding Trust on specified dates (which underlying value will increase or decrease in proportion to fluctuations in the Applicable Reference Price of Crude Oil above or below its starting level) and will be passed through to the holders of the Down-MACRO Tradeable Shares. If the Applicable Reference Price of Crude Oil rises above its starting level, the Down-MACRO Holding Trust's underlying value will decrease proportionately because an obligation to transfer a portion of the Down-MACRO Holding Trust's assets will be included in the calculation of the underlying value of the Up-MACRO Holding Trust. Conversely, if the level of the Applicable Reference Price of Crude Oil falls below its starting level, the Down-MACRO Holding Trust's underlying value will increase to include all of its assets plus an obligation of the Up-MACRO Holding Trust to transfer a portion of its assets. The underlying value of either MACRO Holding Trust on each Price Determination Day (as defined below) represents the aggregate amount of the assets in both of the MACRO Holding Trusts to which that trust would be entitled if the settlement contracts and the income distribution agreement between the paired MACRO Holding Trusts described below were settled on that day.

Under proposed Amex Rule 1401, the Exchange may approve for listing and trading ''Paired Trust Shares'' based on the value of a Reference Price, which may measure assets, prices, or other economic interests. Consistent with this proposed rule, the Amex proposes to list for trading Up-MACRO and Down-MACRO Tradeable Shares based on the Applicable Reference Price of Crude Oil as the Reference Price under proposed Amex Rule 1400 *et seq.* The MACRO Tradeable Shares will be the first Paired Trust Shares to be listed and traded on the Amex. The MACRO Holding Shares will not be listed or traded on the Amex.

Introduction

The Exchange is proposing to adopt rules for the listing and trading of Paired Trust Shares. Paired Trust Shares are comprised of two distinct types of securities—''Holding Shares'' and ''Tradeable Shares''—that are related through a two-tiered structure. The purpose of the following paragraphs in this ''Introduction'' is to describe Paired Trust Shares generically, not to describe a specific product.[5] The Exchange also proposes to amend its original listing and annual listing fees in Sections 140 and 141 of the Amex Company Guide to include the Paired Trust Shares.

The top tier of Paired Trust Shares consists of Holding Shares, which are securities: (a) That are issued by a trust (''Holding Trust'') that is paired with another Holding Trust and whose respective ''underlying values'' move in opposite directions as the value of the specified Reference Price varies from its starting level; (b) that are issued in exchange for cash; (c) a majority (but not necessarily all) of which will be acquired and deposited in a related Tradeable Trust (as defined herein); (d) the issuance proceeds of which are invested and reinvested in highly rated short-term financial instruments that mature prior to the next scheduled income distribution date and that serve the functions of (i) securing the contractual obligations between the two paired Holding Trusts, (ii) covering the trust's expenses, and (iii) if any amount remains, providing periodic Income Distributions to investors;[6] (e) which represent a beneficial interest in the Holding Trust that issued them; (f) the value of which is determined by the underlying value of the related Holding Trust, which underlying value will either (i) increase as a result of an increase in the Reference Price and decrease as a result of a decrease in the Reference Price (in the case of ''Up Holding Shares'' issued by an ''Up Holding Trust'') or (ii) increase as a result of a decrease in the Reference Price and decrease as a result of an increase in the Reference Price (in the case of ''Down Holding Shares'' issued by the paired ''Down Holding Trust''); (g) whose issuing Holding Trust enters into one or more settlement contracts[7] and an income distribution agreement[8]

[5] *See, infra* ''Description of the Reference Price—the Applicable Reference Price of Crude Oil'' for the beginning of the detailed description of the specific product that is being proposed for approval in this filing under the proposed rules for Paired Trust Shares.

[6] Such periodic distributions to investors (''Income Distributions'') are based on the income (after expenses) received from the financial instruments held by each Holding Trust (*e.g.*, interest income from maturing U.S. Treasury securities and repurchase agreements fully collateralized by U.S. Treasury securities), and are made immediately following the periodic transfer of such income between the paired Holding Trusts under the terms of the income distribution agreement as described in clause (g) of this paragraph.

[7] As described below, when Holding Shares are redeemed in a paired optional redemption (''Redemption Distribution'') or upon early or final termination (''Final Distribution''), the settlement contracts between the two Holding Trusts provide for the appropriate transfer of assets between the paired Holding Trusts so that the Holding Shares of each Holding Trust may be redeemed in proportion to the per share underlying value of that Holding Trust.

[8] As described below, the income distribution agreement between the two Holding Trusts provides for the periodic transfer between the paired Holding Trusts of income (after payment of expenses) received by each Holding Trust from the financial instruments (as described above) held by that Holding Trust, with the amount of each periodic transfer based on the proportionate change in the

with the other paired Holding Trust; (h) that, when timely aggregated in a specified minimum number or amount of securities, along with a specified multiple of that number or amount of securities issued by the other paired Holding Trust (together, a ''Creation Unit'') may be redeemed in a Redemption Distribution of cash and/or securities on specified dates by authorized parties; and (i) that may be subject to early mandatory redemption of all Holding Shares in connection with a Final Distribution prior to the final scheduled termination date under specified circumstances.

The second tier of Paired Trust Shares consists of Tradeable Shares, which are securities: (a) That are issued by a trust (''Tradeable Trust'') in exchange for the deposit of Holding Shares (or cash, which cash is then used to purchase Holding Shares) into the Tradeable Trust, with the Holding Shares that are held by the Tradeable Trust being either Up Holding Shares (in the case of ''Up Tradeable Shares'' issued by an ''Up Tradeable Trust'') or Down Holding Shares (in the case of ''Down Tradeable Shares'' issued by a ''Down Tradeable Trust''); (b) which represent an undivided beneficial interest in the Tradeable Trust that issued them; (c) the Quarterly Income Distributions, Redemption Distributions, and Final Distributions on which (which are solely pass-through distributions received on the Holding Shares that are held by the issuing Tradeable Trust) will thereby either (i) in the case of the Up Tradeable Shares, increase as a result of an increase in the Reference Price and decrease as a result of a decrease in the Reference Price or (ii) in the case of the Down Tradeable Shares, increase as a result of a decrease in the Reference Price and decrease as a result of an increase in the Reference Price, in each case as a result of the corresponding change in the underlying value of the Holding Trust (as discussed in the prior paragraph); (d) that may have an exchange feature that will allow authorized parties to exchange such Tradeable Shares for the underlying Holding Shares that can be redeemed for cash and/or securities (any such redemption to be done in specified aggregations called Creation Units); and (e) that may be subject to early mandatory redemption of all Tradeable Shares in connection with a Final Distribution prior to the final scheduled termination date under specified circumstances.

For each separate and discrete Reference Price that may underlie Paired Trust Shares, the Exchange will submit a filing pursuant to Section 19(b) of the Act [9] subject to Commission review and approval. The Exchange may eventually seek to revise the proposed listing criteria and trading rules to permit the listing and trading of Paired Trust Shares pursuant to Rule 19b–4(e) under the Act.

Pursuant to proposed Amex Rule 1402, the Exchange seeks to list and trade the MACRO Tradeable Shares. The MACRO Tradeable Shares will conform to the initial and continued listing criteria under proposed Amex Rule 1402. The MACRO Tradeable Trusts and the MACRO Holding Trusts will be formed under four trust agreements between Investors Bank & Trust Company, as trustee; Claymore Securities, Inc., as administrative agent and marketing agent; and MACRO Securities Depositor, LLC, as depositor.[10] MacroMarkets LLC and Claymore Securities, Inc. are each the owner of 50% of the membership interests in MACRO Securities Depositor, LLC.

Description of the Reference Price—The Applicable Reference Price of Crude Oil

The economic variable whose value will serve as the Reference Price for the first Paired Trust Shares to be listed on the Exchange is the Applicable Reference Price of Crude Oil, which is the settlement price of the NYMEX Division light sweet crude oil futures contract of the ''Designated Maturity'' (as defined below), as established and reported by NYMEX on a per barrel basis in U.S. dollars at the end of each Price Determination Day. A ''Price Determination Day'' for this purpose is each day on which trading of the light sweet crude oil futures contract of the Designated Maturity occurs by open outcry on the trading floor of the NYMEX (located in New York City, New York) through the use of verbal or hand signals, rather than through electronic or other means. Price Determination Days are generally the same as business days—that is, any day other than a Saturday, a Sunday, or a day on which banking institutions and stock exchanges in New York, New York are authorized or required by law, regulation or executive order to close. If a substitute reference oil price is being used, the ''Price Determination Day'' will be each day on which this price is determined by, or in accordance with the rules of, the substitute oil price provider.

A light sweet futures contract of the designated maturity (''Designated Maturity'') means the contract that matures (i) during the next succeeding calendar month if the date of determination is the first day of the current calendar month through and including the tenth business day of the current calendar month, and (ii) during the second succeeding calendar month if the date of determination is the eleventh business day through the last day of the current calendar month. For example, from September 1 through the tenth business day in September, the Applicable Reference Price of Crude Oil will reflect the price of the NYMEX Division light sweet crude oil futures contract that is scheduled to settle in October. From the eleventh business day in September through and including September 30, the NYMEX contract of the designated maturity will be the contract that settles in November. From October 1 through and including the tenth business day in October, the NYMEX contract designated month will continue to be November. The reason for this is that around the middle of each calendar month, the highest volume of trading in NYMEX Division light sweet crude oil futures contracts generally moves from the contract that settles in the following month to the contract that settles in the second following month. Switching into the next month's contract around the eleventh business day of each month is intended to minimize the reflection in the Applicable Reference Price of Crude Oil of factors related to the physical delivery of crude oil, such as physical storage and delivery costs. If the eleventh business day of any month occurs later than the seventeenth calendar day of that month, then the switch to the second month's contract will be made on the preceding business day that occurs on or prior to the seventeenth day of that calendar month.

The underlying value of each MACRO Holding Trust on each Price Determination Day will be determined by reference to the settlement price on that day of the light sweet crude oil contract of the designated maturity.[11] At

Reference Price from its starting level at one or more points during the period following the previous periodic transfer of such income between the paired Holding Trusts.

[9] 15 U.S.C. 78s(b).

[10] The issuer states that neither the MACRO Tradeable Trusts nor the MACRO Holding Trusts will be investment companies as defined in Section 3(a) of the Investment Company Act of 1940, as amended (the ''1940 Act'').

[11] In the event that no settlement price is determined for the light sweet crude oil contract on the NYMEX on a given Price Determination Day and no substitute oil price provider can be utilized, then the settlement price on the prior Price Determination Day will be utilized as that day's

Continued

the close of each day's regular trading session (''Regular Trading Session''), the NYMEX ''Settlement Price Committee'' establishes the settlement price of the light sweet crude oil futures contract for each delivery month that trades on NYMEX. The NYMEX Settlement Price Committee was formed and operates under NYMEX's by-laws and its rules governing floor trading. It is generally composed of NYMEX members and representatives of such members. Under NYMEX rules, the Exchange states that members of the Settlement Price Committee are restricted from using or disclosing, for any purpose other than the performance of such member's official duties, any material non-public information obtained as a result of such member's participation on the Settlement Price Committee. Moreover, federal securities law prohibits the use of material non-public information in connection with the purchase and sale of any MACRO securities. However, the Exchange states that members of the Settlement Price Committee are not prohibited from purchasing or selling NYMEX light sweet crude oil futures contracts or MACRO Holding Shares or MACRO Tradeable Shares. The Exchange states that the settlement prices determined by the NYMEX Settlement Price Committee for each contract month are the official prices used by the NYMEX clearinghouse in determining net gains or losses and margin requirements on the light sweet oil futures contracts. The clearinghouse is a body associated with NYMEX that acts as the buyer to all sellers and the seller to all buyers.

If two specified criteria are satisfied with respect to a particular contract month for the light sweet crude oil futures contract, then the settlement price of that contract month will be equal to the weighted average price (rounded to the minimum price fluctuation of $0.01) of all outright transactions that occurred in the closing range. The Exchange states that ''outright transactions'' means contracts in which one of the parties has taken a position which is not offset by the opposite position taken by that party under another contract, thereby exposing that party to actual risk with respect to the settlement price of the futures contract. The ''closing range'' is defined under NYMEX rules as the last two minutes of the Regular Trading Session or, for the final day of trading of the expiring light sweet crude oil futures contract, the last thirty (30) minutes of the Regular Trading Session.

The Exchange states that the two specified criteria for each contract month and each Price Determination Day are (1) the contract month must have, as of the opening of business for that day, more than 10% of the total open interest for all contract months, and (2) the contract month must represent at least 10% of the closing range volume of all contract months traded on NYMEX on that day. For purposes of calculating total volume, volume from limit orders placed prior to the close in which a buyer indicates that he or she is willing to take the settlement price will be included, but trading volume done during the closing range on the last day of trading in an expiring contract will be excluded. ''Open interest'' means the number of open or outstanding contracts for which an individual or entity is obligated to NYMEX because that individual or entity has not yet made an offsetting sale or purchase or for which an actual contract delivery has not yet occurred. ''Closing range volume'' is the volume of executed trades in the light sweet crude oil futures contract for a particular contract month that occurred on any given day of trading during the last two minutes of the Regular Trading Session or, with respect to the last day of trading for that contract month, during the last thirty (30) minutes of the Regular Trading Session.

The Exchange states that NYMEX determines the settlement prices for delivery months of the light sweet crude oil futures contract that represented 10% or less of the total open interest or in which less than 10% of trading volume occurred during the closing range based upon spread relationships determined in the judgment of the Settlement Price Committee. ''Spread relationship'' refers to the simultaneous purchase and sale of futures contracts with different expirations. The Exchange states that the Settlement Price Committee determines spread relationships by giving the greatest weight to spreads executed late in the trading day in large volumes and lesser weight to spreads traded in smaller volumes executed earlier in the trading day. In any circumstance where the Settlement Price Committee is considering bids and offers for spreads, it must consider the mid-point of the best bid and best offer, not the actual best bid or best offer.

On occasion, a price spike may occur in the closing range. The Exchange states that a ''price spike'' in the closing range will be deemed to have occurred if, in the sole discretion of the Settlement Price Committee, a significant change in the spread relationships between a given month, known as the ''spiked month,'' and the contract months immediately preceding and following such month occurred during the closing range. If a price spike in the closing range occurs in a light sweet crude oil futures contract for a contract month with respect to which the open interest and volume criteria are met and the settlement price is therefore determined by weighted average price, the Settlement Price Committee may disregard the settlement price for the spiked month in considering spread relationships for the other months where the open interest and volume criteria were not met.

The Exchange states that the Settlement Price Committee may not establish a settlement price that would be lower than the best bid or higher than the best offer that had been posted with NYMEX and remained available for execution and unfilled for the final fifteen minutes of trading and was for at least 100 outright contracts in the relevant delivery month or at least 200 spread contracts involving that delivery month and a different delivery month.

Finally, if any settlement price determined with respect to the relevant delivery month, either by calculation of the weighted average price or by reference to spread relationships, is inconsistent with transactions that occurred during the closing range in other delivery months of the light sweet crude oil futures contract or with market information known to the Settlement Price Committee, the Settlement Price Committee may, in its discretion, set the settlement price at a level consistent with such other transactions or market information.

The Exchange states that crude oil prices are subject to temporary distortions due to various factors, including, but not limited to, lack of liquidity in the markets, the participation of speculators, war, geopolitical instability, supply decisions and policies instituted by OPEC and other non-OPEC oil-producing countries such as Russia, increased demand in developing countries, weather conditions, new environmental policies, government regulation, and government intervention. These factors may cause dramatic fluctuations, or volatility, in the Applicable Reference Price of Crude Oil. Other factors that impact the supply and demand for oil and, therefore, its price, may also add to volatility in the Applicable Reference Price of Crude Oil. The Exchange states that the demand for crude oil is driven by the consumption of energy for transportation, industrial consumption of power, and the demand for sources of energy to be used for

settlement price on which to base the Applicable Reference Price of Crude Oil.

heating and cooling. Other factors that may impact demand include taxes, environmental laws, international trade agreements, changes in exchange rates associated with the U.S. dollar, interest rate changes (which affect exchange rates), and technology (*e.g.*, by enabling the exploitation of alternative fuel sources and by providing methods to use oil more efficiently). The Exchange states that the supply of crude oil is driven by worldwide oil inventories, which are a function of successful exploration, feasibility of drilling, production levels, transportation costs, and the ability of producers to refine the crude oil into consumable products. Other factors that may impact supply include technological advances (*e.g.*, by making exploration and drilling more economically feasible), production interruptions (*e.g.*, due to political instability, natural disasters, acts of war or sabotage, labor problems, machinery failure, or human error), and production decisions by oil-producing countries or regions, and government programs and policies (*e.g.*, permitting or restricting oil drilling in given areas). The Exchange states that all of these factors may adversely affect the Applicable Reference Price of Crude Oil and therefore adversely affect the distributions on the MACRO Holding Shares and the MACRO Tradeable Shares.

Trading in the light sweet crude oil futures contract occurs by open outcry on the trading floor at NYMEX from 10 a.m. until 2:30 p.m. (New York City time) on each business day (the ''Regular Trading Session''). All prices are quoted in U.S. dollars. Trading also occurs after hours via an internet-based trading platform, but the daily settlement price established by NYMEX for each light sweet crude oil futures contract is based only on trading that occurs during the Regular Trading Session.

The Exchange states that MacroMarkets will enter into a licensing agreement with NYMEX for the use of the settlement prices for certain of the commodity-based futures contracts that trade on the facilities of NYMEX, including the light sweet crude oil futures contracts. The MACRO Holding Trusts and the MACRO Tradeable Trusts will collectively enter into a licensing agreement with MacroMarkets that grants a sublicense to each trust giving the trust certain rights to use NYMEX's proprietary settlement prices for the near months of the light sweet crude oil futures contracts. The Exchange states that the term of the license granted by NYMEX to MacroMarkets is five years, and upon the termination of that license agreement the aforementioned sublicense will also expire. NYMEX has the right to terminate the license earlier if it believes that MacroMarkets or any of its sublicensees have misused the license. Upon termination of the NYMEX license, the Exchange states that MacroMarkets and the depositor [12] will seek to negotiate a renewal of the license on terms comparable to those of the existing license. The Exchange states that if NYMEX refuses to renew the license on acceptable terms, an effort will be made to negotiate a license with the Dow Jones Energy Service for use of its West Texas intermediate crude oil spot price on terms comparable to the NYMEX license. If such a license is obtained, this spot price will become the new Applicable Reference Price of Crude Oil. If no license is obtained from the Dow Jones Energy Service, the holders of the paired MACRO Holding Shares (including the holders of the MACRO Tradeable Shares who will be entitled to vote the underlying MACRO Holding Shares on deposit in the MACRO Tradeable Trusts for this purpose) may vote to select a different crude oil price provider.[13] If the shareholders are not able to agree unanimously on a new price provider or a license cannot be negotiated with the provider selected by the shareholders, a termination trigger (''Termination Trigger'') will occur, which will result in an early redemption of the MACRO Holding Shares and the MACRO Tradeable Shares (*see* Termination Triggers).

Light Sweet Crude Oil Futures Contracts

The NYMEX Division light sweet crude oil futures contract is traded on the physical facilities of NYMEX. It is quoted on a per barrel basis and traded in units of 1,000 barrels (42,000 gallons) under the trading symbol ''CL'' followed by a reference to the month and year in which such contract settles. Prices are quoted for delivery at Cushing, Oklahoma, which is a major crude oil transshipment point with extensive pipeline connections to oil producing areas and refining centers in the southwestern United States and along the U.S. Gulf Coast. According to NYMEX, its light sweet crude oil futures contract is used as an international pricing benchmark for oil because of its excellent liquidity and price transparency.

Each light sweet crude oil futures contract traded on NYMEX has a specific delivery month and year in which such contract is scheduled to terminate. This month is referred to as that contract's ''delivery month'' or ''contract month.'' For example, the Exchange states that if one purchases the September 2006 light sweet crude oil futures contract, the delivery month and year would be September 2006, and such contract would obligate the seller to deliver 1,000 barrels of light sweet crude oil to the buyer at Cushing, Oklahoma during September 2006. In order to determine the price that the buyer has to pay on delivery, the NYMEX terminates trading in a specific contract month for the light sweet crude futures contract on the third business day prior to the 25th day of the preceding month or, if the 25th day is not a business day, on the third business day prior to the business day that precedes the 25th day of the preceding month. For example, the September 2006 futures contract will stop trading on August 22, 2006, which is three business days prior to August 25, 2006.

Regardless of any prior action concerning price limits during the Regular Trading Session, commencing fifteen (15) minutes before the close of that session, the Exchange states that there will be no price fluctuation limits on any contract month in the light sweet crude oil futures contract and, accordingly, no further trading halts may occur for the remainder of the Regular Trading Session. In addition, the Exchange states that there will be no limitations on price fluctuations for any contract month of the light sweet crude oil futures contract during the final trading day for that contract. The NYMEX Board of Directors may provide at any time that there shall be no trading during any one business day or trading session day in any commodity for future delivery in any specified month or months at prices more than a fixed limit above or below the settlement price for the preceding business day. At the discretion of the Board, any limitation so imposed by it may be changed or suspended or temporarily modified

[12] In addition to participating in such negotiations, the depositor performs certain other tasks that are not performed by the trustee or the administrative agent, such as the preparation of filings under the Act.

[13] If a benchmark other than the light sweet crude oil futures contract traded on NYMEX is selected for the determination of the Applicable Reference Price of Crude Oil, the Amex will file with the Commission a proposed rule change pursuant to Rule 19b–4 under the Act seeking approval to continue trading the MACRO Trading Shares and, unless approved, the Exchange will commence delisting the MACRO Tradeable Shares. In the event the Exchange believes that a change in the benchmark or pricing source for the Applicable Reference Price of Crude Oil is only temporary, the Exchange may contact the Commission staff to discuss the matter.

from time to time and without prior notice.

The Exchange states that light sweet crude oil futures contracts may be settled physically. Delivery must begin on or after the first calendar day of the delivery month and must be completed by the last calendar day of that month. All deliveries are made ratably over the course of the month. In practice, the light sweet crude oil futures contract is usually settled in cash by means of the futures and clearing procedures of the NYMEX.

Under the NYMEX's rules governing the light sweet crude oil futures contract, only certain types of oil meeting specific quality criteria may be delivered under the contract. The NYMEX's rules also specify the levels of sulfur, gravity, viscosity, vapor pressure, impurity levels, and pour points for different grades of oil that can be delivered under the light sweet crude oil futures contract. The Exchange states that this specificity serves as the definition of ''light sweet crude oil'' under the contract and ensures the quality of the oil to be delivered. The following domestic grades of oil may be delivered by the seller without any discount from the final futures price of the futures contract: West Texas Intermediate, Low Sweet Mix, New Mexican Sweet, North Texas Sweet, Oklahoma Sweet, and South Texas Sweet crude oil. Several foreign grades of oil may also be delivered by a seller with a specific discount or premium from the futures price. The Exchange states that the primary deliverable grade of oil under the contract is West Texas Intermediate crude oil, which is the U.S. benchmark grade of oil.

Product Description

On and after the closing date for the MACROs transaction, the Up-MACRO Holding Trust and the Up-MACRO Tradeable Trust will issue Up-MACRO Holding Shares and the Up-MACRO Tradeable Shares, respectively, on a continuous basis, upon the direction of any ''Authorized Participant'' (as defined herein) by delivery of an issuance order to the administrative agent for the paired MACRO Holding Trusts on any Price Determination Day. (*See* ''Paired Issuances'' below.) Up-MACRO Holding Shares will be issued at a per share price equal to the underlying value per share of the Up-MACRO Holding Trust on the Price Determination Day on which an issuance order for the creation of paired MACRO Holding Shares is received. The proceeds from each ''Paired Issuance'' (as defined below) of the Up-MACRO Holding Shares will be delivered to the trustee for the Up-MACRO Holding Trust. These proceeds will be combined with the proceeds from the related Paired Issuance of Down-MACRO Holding Shares, and an equal amount of such proceeds will be deposited into the Up-MACRO Holding Trust and the Down-MACRO Holding Trust.[14] Depending upon whether the Authorized Participants who replaced the issuance order requested holding shares and/or tradeable shares,[15] the trustee for the Up-MACRO Holding Trust will then deliver all or a portion of the issued Up-MACRO Holding Shares to the Up-MACRO Tradeable Trust and the remainder of the Up-MACRO Holding Shares to the creating Authorized Participants, and the trustee for the Up-MACRO Tradeable Trust will cause such trust to issue additional Up-MACRO Tradeable Shares and deliver such shares to the creating Authorized Participants.

The trustee for the Up-MACRO Holding Trust will then apply the net proceeds received by the Up-MACRO Holding Trust to purchase bills, bonds and notes issued and guaranteed by the United States Treasury, and repurchase agreements fully collateralized by U.S. Treasury securities[16] (collectively, ''Treasuries'') maturing prior to the first quarterly distribution date (*e.g.*, three-month U.S. Treasury securities). The allocation of funds between U.S. Treasury securities and repurchase agreements will be based on the historical redemption experience of the MACRO Holding Trusts. Due to the continuous redemptions allowed by the MACRO Holding Trusts, it is desirable to allow some funds to be invested in such repurchase agreements that terminate overnight in order to avoid the transaction costs involved in allocating and delivering U.S. Treasury securities to one or more redeeming Authorized Participants. This also gives the MACRO Holding Trusts a measure of bargaining power with securities dealers and repo counterparties by allowing the administrative agent to choose among a number of different dealers and to select U.S. Treasury securities of varying maturities (although never greater than 90 days). In addition, since MACRO Holding Trusts will hold some cash to meet their future obligations to their shareholders as well as to each other, the MACRO Holding Trusts can make use of such cash by investing in such repurchase agreements to earn an additional return for their shareholders, pending the application of the cash to satisfy these obligations. Such returns may be used by the MACRO Holding Trusts to pay their trust expenses as well. On each quarterly distribution date, except for the final scheduled termination date or an early termination date, the trustee, at the direction of the administrative agent, will reinvest the proceeds from the maturing Treasuries that are not part of (i) a Quarterly Income Distribution or (ii) in the case of a quarterly distribution date that is a Redemption Date (as described below) for the MACRO Holding Shares, a Redemption Distribution directed on that date, in new Treasuries that will mature prior to the next distribution date.

The Authorized Participant will offer the Up-MACRO Holding Shares and the Up-MACRO Tradeable Shares at a per share offering price that will vary, depending, among other things, on the current level of the Applicable Reference Price of Crude Oil and the current market price of the Up-MACRO Tradeable Shares on the Amex at the time of the offer. The Authorized Participants who offer such shares, or their respective affiliates, may receive customary compensation and brokerage fees from investors to whom they sell Up-MACRO Holding Shares or Up-MACRO Tradeable Shares.

The process described in the immediately preceding paragraphs will also be followed in connection with the related Paired Issuance of the Down-MACRO Holding Shares and the Down-MACRO Tradeable Shares. The proceeds from the Paired Issuance of the Down-MACRO Holding Shares will be delivered to the trustee for the Down-MACRO Holding Trust. These proceeds will be combined with the proceeds from the related Paired Issuance of UP-

[14] While equal amounts from the proceeds of a Paired Issuance are deposited in the Up-MACRO Holding Trust and the Down-MACRO Holding Trust, the settlement contracts between the two MACRO Holding Trusts provide an obligation for the proportional transfer of those assets between the trusts when the contracts are settled.

[15] A portion of the Up-MACRO Holding Shares as well as the Down-MACRO Holding Shares (representing less than 50% of each) issued on any Paired Issuance date may be acquired by other investors who are not affiliated with the MACRO Tradeable Trusts. Such other investors must either be Authorized Participants or ''qualified institutional buyers'' (as defined in Rule 144A of the Securities Act of 1933 (''Securities Act'').

[16] The repurchase agreements will be entered into with counterparties that are (i) banks with at least one billion U.S. dollars in assets or (ii) registered securities dealers that are deemed creditworthy by the administrative agent. Such repurchase agreements must terminate overnight, and the obligation of a counterparty to repurchase U.S. Treasury securities from a MACRO Holding Trust will be fully collateralized, as defined in Rule 5b–3 under the 1940 Act. None of the counterparties may be ''affiliated persons'' (as defined in the 1940 Act) with respect to the trustee, the administrative agent, the depositor, any of the MACRO Holding Trusts or MACRO Tradeable Trusts, any of the Authorized Participants, or any affiliated persons with respect to any of the foregoing entities.

MACRO Holding Shares, with an equal amount[17] of the proceeds deposited into the Up-MACRO Holding Trust and the Down-MACRO Holding Trust. Depending upon whether the Authorized Participants who placed the issuance order requested holding shares and/or tradeable shares, the trustee for the Down-MACRO Holding Trust will then deliver all or a portion of the issued Down-MACRO Holding Shares to the Down-MACRO Tradeable Trust and the remainder to the creating Authorized Participants, and the trustee for the Down-MACRO Tradeable Trust will cause such trust to issue additional Down-MACRO Tradeable Shares and deliver such shares to the creating Authorized Participants. The net proceeds received by the Down-MACRO Holding Trust will be applied by the trustee for the Down-MACRO Holding Trust to purchase Treasuries on behalf of the Down-MACRO Holding Trust.[18]

Under the trust agreements (which the administrative agent is a party to), the administrative agent will be required, among other things, to use its commercially reasonable efforts to identify and direct the trustee to purchase new Treasuries on each quarterly distribution date (except for the final scheduled termination date or an early termination date) and Paired Issuance date for each of the MACRO Holding Trusts with the same maturities or terms, stated interest rates (if any), and applicable discount rates in order for each trust to be able to realize comparable amounts of income during each quarter. Treasuries will be acquired and held in the minimum permissible denominations in order to facilitate the maintenance of parity in the assets held by each of the MACRO Holding Trusts. However, a portion of the assets of a MACRO Holding Trust may from time to time be held in the form of cash, due to mismatches between the maturity profiles of Treasuries available for purchase and the length of time between distribution dates. Any U.S. Treasury securities delivered in connection with a paired optional redemption (as described below) will be selected by the administrative agent on a ''last in, first out'' basis. The U. S. Treasury securities selected by the administrative agent to be delivered as the Redemption Distribution in a paired optional redemption will be distributed ratably, by type, to each redeeming Authorized Participant.

As described in more detail below, the Up-MACRO Holding Trust will enter into an income distribution agreement and multiple settlement contracts[19] with the Down-MACRO Holding Trust. The Down-MACRO Holding Trust will act as the counterparty to the Up-MACRO Holding Trust under the income distribution agreement and the settlement contracts between the two MACRO Holding Trusts, and vice-versa, and the Treasuries and cash on deposit in each of the MACRO Holding Trusts will serve the functions of securing the contractual obligations between the two trusts, generating income to cover the trust's expenses and, if any amount remains, providing Quarterly Income Distributions to investors. In accordance with the terms of the income distribution agreement between the paired MACRO Holding Trusts, the Up-MACRO Holding Trust will, on each Quarterly Income Distribution date, either (i) be entitled to receive from the Down-MACRO Holding Trust all or a portion of that trust's available income (as defined below), or (ii) be required to pay all or a portion of its own available income to the Down-MACRO Holding Trust, based, in each case, on the level of the Applicable Reference Price of Crude Oil on each day that has elapsed since the preceding Quarterly Income Distribution date. The Up-MACRO Holding Trust will then make a quarterly distribution of income to holders of the Up-MACRO Holding Shares (including the Up-MACRO Tradeable Trust) out of the available income that it holds on deposit, if any, on each Quarterly Income Distribution date after it has made or received a payment under the income distribution agreement between the paired MACRO Holding Trusts.

Similarly, the Final Distributions and Redemption Distributions on the Up-MACRO Holding Shares and the Down-MACRO Holding Shares will be determined by the payments that each MACRO Holding Trust will be required to make to, or be entitled to receive from, the other MACRO Holding Trust under the settlement contracts between them being settled on the final scheduled termination date, an early termination date, or any Redemption Date, as the case may be. These settlement obligations between the MACRO Holding Trusts will be based on the underlying value of each MACRO Holding Trust on the appropriate date, determined by the change in the level of the Applicable Reference Price of Crude Oil from its starting level to its ending level on the Price Determination Day preceding the final scheduled termination date or early termination date or, in the case of a redemption, on the day (''Redemption Date'') on which a redemption order is placed by an Authorized Participant. In the case of the final scheduled termination date or an early termination date, the applicable MACRO Holding Trust must make a final payment to the other MACRO Holding Trust out of the proceeds of the Treasuries that it holds on deposit on that date to settle all of the settlement contracts between them. In the case of a Redemption Date that occurs between Quarterly Income Distribution dates, the applicable MACRO Holding Trust must transfer all or a portion of its cash and/or Treasuries to the other MACRO Holding Trust in order to settle one or more of the settlement contracts between them based on the amount redeemed.

The Up-MACRO Tradeable Trust will pass through to the holders of its Up-MACRO Tradeable Shares all Quarterly Income Distributions, Redemption Distributions, and Final Distributions that it receives on the Up-MACRO Holding Shares that it holds, and the Down-MACRO Tradeable Trust will do likewise to holders of its Down-MACRO Tradeable Shares with respect to all distributions that it receives on the Down-MACRO Holding Shares that it holds.

Investors Bank & Trust Company, a Massachusetts trust company, will act as trustee for each of the MACRO Holding Trusts and MACRO Tradeable Trusts under four separate trust agreements. The trustee will be responsible for, among other things: (i) Administering redemptions and Paired Issuances of MACRO Holding Shares in MACRO Units or integral multiples thereof (with a ''MACRO Unit'' being a Creation Unit comprised of 50,000 Up-MACRO Holding Shares and 50,000 Down-MACRO Holding Shares in combination) and administering exchanges of MACRO Tradeable Shares; (ii) making Quarterly Income Distributions, Redemption Distributions and Final Distributions to the holders of the MACRO Holding Shares and passing through those distributions to the holders of the MACRO Tradeable Shares; (iii) investing cash on deposit in the paired MACRO Holding Trusts in Treasuries in accordance with the

[17] *See supra,* note 14.

[18] There is a similar process for paired optional redemptions of MACRO Holding Shares by Authorized Participants and the receipt of related Redemption Distributions consisting of cash and/or U.S. Treasury securities. *See infra,* discussion under ''Redemption Distributions and Final Distributions.''

[19] The settlement contracts between the MACRO Holding Trusts are not futures contracts traded on any commodities or stock exchange. These contracts are individually negotiated and entered into by or on behalf of the Up-MACRO Holding Trust and the Down-MACRO Holding Trust.

directions of the administrative agent; (iv) on each Price Determination Day, calculating the Price Level Percentage Change (as defined below), the respective underlying values of the paired MACRO Holding Trusts and the per share underlying value of the related MACRO Holding Shares and MACRO Tradeable Shares, and posting these calculations on the publicly accessible Web site maintained by the administrative agent; (v) calculating the Price Level Percentage Change and the respective underlying values of the paired MACRO Holding Trusts prior to each Quarterly Income Distribution date, Redemption Date, early termination date and the final scheduled termination date; (vi) calculating, for each Quarterly Income Distribution date, the amount of available income on deposit in each of the paired MACRO Holding Trusts, the payment due under the income distribution agreement between the MACRO Holding Trusts, and the Quarterly Income Distributions to be made on the respective MACRO Holding Shares and passed through to the related MACRO Tradeable Shares; (vii) calculating, for the final scheduled termination date, an early termination date and each Redemption Date, the final payment due under the settlement contracts being settled between the MACRO Holding Trusts and the Final Distribution or Redemption Distribution, as the case may be, to be made on the respective MACRO Holding Shares and passed through to the related MACRO Tradeable Shares; (viii) delivering any notices required under any of the trust agreements; and (ix) notifying the depositor and the administrative agent of the occurrence of certain of the Termination Triggers.

Claymore Securities, Inc., a Kansas corporation that is a registered broker/dealer, will act as the administrative agent and a marketing agent [20] for each of the MACRO Holding Trusts and MACRO Tradeable Trusts and will be a party to the trust agreement for each of the trusts. The administrative agent will perform or oversee the performance of a number of duties on behalf of the four trusts, including: (i) Directing the trustee in the acquisition of new Treasuries, including placing the purchase orders for such Treasuries, for the paired MACRO Holding Trusts on each Quarterly Income Distribution date and each Paired Issuance date in accordance with the acquisition guidelines that are specified in the trust agreements for the paired MACRO Holding Trusts; [21] (ii) selecting U.S. Treasury securities to be delivered in connection with the settlement of the settlement contracts between the paired MACRO Holding Trusts and in connection with paired optional redemptions in accordance with the rules specified in the trust agreements; (iii) processing redemption and creation orders for MACRO Holding Shares and MACRO Tradeable Shares from Authorized Participants; (iv) directing the trustee in effecting redemptions and Paired Issuances; (v) maintaining the publicly accessible Web site that displays information regarding the MACRO Holding Shares and MACRO Tradeable Shares; and (vi) notifying the depositor and the trustee of the occurrence of certain Termination Triggers.

The underlying values of the MACRO Holding Trusts and, consequently, the prices of the MACRO Holding Shares and MACRO Tradeable Shares and the distributions on the MACRO Holding Shares and pass-through distributions to the holders of the MACRO Tradeable Shares track the Applicable Reference Price of Crude Oil, which is based on the futures contract that is an international pricing benchmark for oil. The Applicable Reference Price of Crude Oil is calculated on a per barrel basis and established by NYMEX on each Price Determination Day, which is each day on which trading of the light sweet crude oil futures contract of the designated maturity occurs by open outcry on the trading floor of NYMEX. *See* ''Description of the Reference Price—The Applicable Reference Price of Crude Oil'' for more information. If the level of the Applicable Reference Price of Crude Oil increases, the underlying value of the Up-MACRO Holding Trust will increase and that of the Down-MACRO Holding Trust will decrease, each by an amount proportionate to the increase in the price. Conversely, if the level of the Applicable Reference Price of Crude Oil decreases, the underlying value of the Up-MACRO Holding Trust will decrease and that of the Down-MACRO Holding Trust will increase, each by an amount proportionate to the decrease in the price.

Quarterly Income Distributions

Each MACRO Holding Trust will make Quarterly Income Distributions on its MACRO Holding Shares using the income realized on the Treasuries in the paired MACRO Holding Trusts that remain available after: (i) Each MACRO Holding Trust has deposited a ''fee deduction amount'' (as defined below) into a fee payment account created under the trust agreement for that MACRO Holding Trust, which amount will be applied to pay the expenses and fees of that trust [22] and the related MACRO Tradeable Trust and (ii) each MACRO Holding Trust has either made or received a payment under the income distribution agreement on that Quarterly Income Distribution date. With respect to the latter, on every day on which the ending level of the Applicable Reference Price of Crude Oil exceeds the starting level on the closing date, the Up-MACRO Holding Trust will become entitled to retain all of its ''available income accrual'' (as defined below) for that day and to receive all or a portion of the Down-MACRO Holding Trust's ''available income accrual'' for that day. On every day on which the ending level of the Applicable Reference Price of Crude Oil is below the starting level on the closing date, the Up-MACRO Holding Trust will be obligated to pay all or a portion of its ''available income accrual'' for that day to the Down-MACRO Holding Trust. On each day during the calculation period that precedes each Quarterly Income Distribution date, the result of any entitlement of the Up-MACRO Holding Trust under the income distribution agreement as described above to retain all or a portion of its available income accrual for that day, and to receive all or a portion of the Down-MACRO Holding Trust's available income accrual for that day is referred to as the Up-MACRO Holding Trust's ''earned income accrual'' for that day. On each Quarterly Income Distribution date,[23] the Up-MACRO Holding Trust will declare a Quarterly Income Distribution on each outstanding Up-MACRO Holding Share equal to the sum of all earned income accruals for that trust for each day of the preceding calculation period plus the interest component of the underlying value of each Up-MACRO Holding Share created during such calculation period *less* any portion of the foregoing sum already distributed in connection with paired optional redemptions that occurred during that calculation period, divided by the aggregate number of outstanding Up-

[20] MACRO Financial, LLC will act as an additional marketing agent.

[21] A registered broker/dealer will perform all securities transactions and provide all related advice with respect to buying or selling securities.

[22] *See* ''Fees and Expenses'' for additional detail on the application of funds in the fee payment account.

[23] This statement is not applicable with respect to the final scheduled termination date or an early termination date or in connection with a Redemption Distribution for which a redemption order was placed on that Quarterly Income Distribution date.

MACRO Holding Shares on that Quarterly Income Distribution date.[24] The Quarterly Income Distributions of the Down-MACRO Holding Trust will be calculated similarly, except that the Down-MACRO Holding Trust's entitlement to earned income accruals will be inversely correlated with the Up-MACRO Holding Trust's entitlements described above. In each case, each holder of a MACRO Tradeable Share will then receive, on a pass-through basis, its proportionate share of the Quarterly Income Distribution that is paid on the MACRO Holding Shares held by the respective MACRO Tradeable Trust. The Quarterly Income Distribution date, record date, and distribution payment date for each MACRO Tradeable Trust are the same dates as for the related MACRO Holding Trust.

The ''available income accrual'' for a MACRO Holding Trust for each day is (i) the sum of, for each Treasury on deposit in the applicable trust on that day, the product of the purchase price at which the trust acquired that Treasury and the daily yield rate applicable to that Treasury, minus (ii) the daily fee accrual. The ''daily fee accrual'' for that MACRO Holding Trust is the ''asset amount'' [25] for the trust on each day multiplied by the ''daily fee accrual rate.'' [26] The sum of the daily fee accruals for each of the MACRO Holding Trusts for an entire calculation period [27] will be equal to the ''fee deduction amount'' for that calculation period and that trust, which is paid quarterly as described in the prior paragraph.

If available, an amount equal to the Up-MACRO aggregate par amount [28] or Down-MACRO aggregate par amount must be reinvested by the trustee, at the direction of the administrative agent, in new Treasuries on each Quarterly Income Distribution date (unless that Quarterly Income Distribution date is the final scheduled termination date or an early termination date), after reducing that amount by the aggregate par amount of any Up-MACRO Holding Shares or Down-MACRO Holding Shares being redeemed if that Quarterly Income Distribution date is also a paired optional Redemption Date (*i.e.*, a date on which a redemption order has been submitted) for a portion of the MACRO Holding Shares. If, after depositing the fee deduction amount into the fee payment account, the funds remaining on deposit in the Up-MACRO Holding Trust or Down-MACRO Holding Trust on any Quarterly Income Distribution date are equal to or less than the Up-MACRO or Down-MACRO aggregate par amount, as the case may be, then all of these remaining funds must be reinvested in Treasuries and the trust will have no available income with which to make a payment under the income distribution agreement to the paired MACRO Holding Trust. If less than the Up-MACRO aggregate par amount or the Down-MACRO aggregate par amount, as the case may be, is invested in Treasuries on any Quarterly Income Distribution date because the fee deduction amount of that MACRO Holding Trust exceeded the income on its Treasuries, the deficiency in the amount that is invested must be made up out of income received on subsequent Quarterly Income Distribution dates until the amount invested does equal the Up-MACRO aggregate par amount or Down-MACRO aggregate par amount.

If a MACRO Holding Trust does not have any available income on a given Quarterly Income Distribution date and does not receive any available income under the income distribution agreement from the paired MACRO Holding Trust, it will not make any Quarterly Income Distribution to its shareholders on that Quarterly Income Distribution date. If a MACRO Holding Trust fails to make either (i) a payment under the income distribution agreement or (ii) a Quarterly Income Distribution to its shareholders on any Quarterly Income Distribution date because it does not have any funds available for distribution, it will not be required to make up that payment or Quarterly Income Distribution on subsequent Quarterly Income Distribution dates, even if it has funds available to do so.

Redemption Distributions and Final Distributions

An Authorized Participant initiates a Redemption Distribution by presenting paired MACRO Holding Shares in MACRO Unit multiples to the MACRO Holding Trusts for redemption in exchange for cash and/or U.S. Treasury securities. A Final Distribution involves the distribution of cash in connection with the termination of the MACRO Holding Trusts. A Redemption Distribution or Final Distribution from a MACRO Holding Trust occurs when the MACRO Holding Trust settles some or all of the settlement contracts entered into with its paired MACRO Holding Trust. Each settlement contract will have a notional amount equal to the aggregate par amount of one MACRO Unit.

On the final scheduled termination date or early termination date following the occurrence of a Termination Trigger, the trustee will cause the paired MACRO Holding Trusts to settle all of the settlement contracts between them using the funds they hold on deposit on those dates, which will consist of all interest, discount, principal, and any other amounts received by each trust upon the maturity of its Treasuries immediately prior to those dates. After the settlement contracts between the MACRO Holding Trusts have been settled, each MACRO Holding Trust will declare a Final Distribution in redemption of that trust's MACRO Holding Shares using all the funds it then holds on deposit, and the trustee will pay that Final Distribution, in cash, to shareholders on the distribution payment date that follows the final scheduled termination date or early termination date in redemption of those shares.

On a Redemption Date, which may be any business day prior to the final scheduled termination date or an early termination date, an Authorized Participant may direct a paired optional redemption by placing a redemption order with the trustee and the

[24] Each registered holder of Up-MACRO Holding Shares or Up-MACRO Tradeable Shares on the ''record date,'' which is the last business day of the month in which the related Quarterly Income Distribution date occurred, will be entitled to receive the quarterly dividend on the ''distribution payment date,'' which is the third business day of the month immediately following the month in which the related Quarterly Income Distribution date occurred. The quarterly ''income distribution date'' is the second business day prior to the record date (*i.e.*, two business days prior to the last business day of that month).

[25] The ''asset amount'' refers to the amount of assets on deposit in a MACRO Holding Trust, calculated as of any day of a calculation period from a formula based on the aggregate par amount of the MACRO Holding Shares issued by that MACRO Holding Trust plus the available income accrual for each elapsed day of that calculation period (not including the date of determination), with certain adjustments for any available income accruals in connection with paired optional redemptions and/or Paired Issuances of MACRO Holding Shares during such calculation period prior to the date of determination.

[26] The ''daily fee accrual rate'' will be equal to an annual rate of 1.60% until the second anniversary of the closing date and an annual rate of 1.50% for each succeeding year, divided by 365 or 366, depending on the actual number of days in the current year. These rates represent the annual rate at which the funds of each MACRO Holding Trust are allocated to be used for the payment of each trust's fees and expenses.

[27] A ''calculation period'' is defined as the period between Quarterly Income Distribution dates, beginning on the preceding Quarterly Income Distribution date and ending on the day prior to the current Quarterly Income Distribution date.

[28] The ''aggregate par amount'' is defined as the product of the aggregate number of outstanding shares issued by the Up-MACRO Holding Trust or the Down-MACRO Holding Trust, as the case may be, multiplied by the stated par amount per share. The stated par amount per share is equal to the starting level of the Applicable Reference Price of Crude Oil.

administrative agent at least 30 minutes prior to the end of trading of light sweet crude oil futures contracts by open outcry on the NYMEX at 2:30 p.m. (New York City time). If the Authorized Participant delivers, by 10 a.m. on the business day following the Redemption Date, or such other day and time as may be specified in the Participants Agreement, MACRO Holding Shares or MACRO Tradeable Shares that in the aggregate constitute the requisite number of MACRO Units being redeemed, plus the applicable ''redemption cash component'' [29] and applicable transaction fee ($500 for each trust whose MACRO Holding Shares are being redeemed or whose MACRO Tradeable Shares are being exchanged), then the trustee will effect the redemption by delivering cash and/or U.S. Treasury securities in accordance with the instructions of the administrative agent to the redeeming Authorized Participant on the first business day following the Redemption Date if only MACRO Holding Shares were tendered for redemption or within such other time period as may be specified in the Participants Agreement. The administrative agent will select cash and/or U.S. Treasury securities for delivery in redemptions in accordance with the following rules: (1) First, all cash delivered in connection with Paired Issuances directed on the same day as the Redemption Date will be used; (2) second, all cash on deposit in the MACRO Holding Trusts from maturing repurchase agreements will be used; and (3) if insufficient cash is available from these two sources, the remainder of the Redemption Distribution will be delivered in the form of U.S. Treasury securities.

In the case of a partial paired optional redemption by Authorized Participants, the number of settlement contracts that will be settled between the paired MACRO Holding Trusts in that transaction will equal the number of MACRO Units of paired MACRO Holding Shares that are being redeemed. The holders of MACRO Holding Shares who are not participating in a paired optional redemption will not receive any Redemption Distribution on the relevant Redemption Date, unless that Redemption Date is also a Quarterly Income Distribution date, in which case they will receive only their Quarterly Income Distribution, if any, that is payable to them on that date. Any Final Distribution or Redemption Distribution on MACRO Holding Shares that were held on deposit by the corresponding MACRO Tradeable Trust will be passed through to the holders of the corresponding MACRO Tradeable Shares on any final scheduled termination date, early termination date or Redemption Date, as the case may be.

Holders of MACRO Tradeable Shares may not participate in a paired optional redemption. Only Authorized Participants may place an order with the administrative agent to exchange their MACRO Tradeable Shares for the underlying MACRO Holding Shares on deposit in the related MACRO Tradeable Trust (even if they do not wish to then effect a paired optional redemption).[30] Therefore, holders of MACRO Tradeable Shares who are not Authorized Participants must sell them to Authorized Participants [31] or other interested investors (*e.g.*, on the Exchange) in order to liquidate their investment in those shares prior to the final scheduled termination date or any early termination date.

Alternatively, an Authorized Participant may direct a paired optional redemption of MACRO Holding Shares by presenting to the trustee for exchange into MACRO Holding Shares and then redemption a combination of MACRO Tradeable Shares that will constitute, following such exchange, one or more MACRO Units (each consisting of 50,000 Up-MACRO Holding Shares and 50,000 Down-MACRO Holding Shares) or a combination of MACRO Holding Shares and MACRO Tradeable Shares that will constitute, after the Tradeable Shares are exchanged, one or more MACRO Units. Consequently, the ability of an Authorized Participant to direct the redemption of any MACRO Holding Shares depends on that Authorized Participant being able to acquire and present for simultaneous redemption MACRO Holding Shares (or MACRO Tradeable Shares exchangeable for such MACRO Holding Shares) issued by both of the paired MACRO Holding Trusts in sufficient quantity to form one or more MACRO Units. The number of settlement contracts between the MACRO Holding Trusts that will be settled in connection with a paired optional redemption will be equal to the number of MACRO Units that are being redeemed on a net daily basis. Following a paired optional redemption, the trustee will record an appropriate reduction in the aggregate number of MACRO Holding Shares that are outstanding on a net daily basis.

The amount of any Final Distribution or Redemption Distribution from a MACRO Holding Trust will depend on the payments between the paired MACRO Holding Trusts under the settlement contracts being settled between them, which final payments will, in turn, be based on the underlying value (as defined below) of each MACRO Holding Trust on (i) the last Price Determination Day preceding the final scheduled termination date or early termination date, or (ii) in the case of a paired optional redemption, on the relevant Redemption Date. The underlying value on the relevant day will be calculated by reference to the ending level of the Applicable Reference Price of Crude Oil on that date. If the level of the Applicable Reference Price of Crude Oil on the relevant Price Determination Day is above its starting level, the Up-MACRO Holding Trust will be entitled to receive a final payment from the Down-MACRO Holding Trust in an amount proportional to the increase in the level of the Applicable Reference Price of Crude Oil. If the level of the Applicable Reference Price of Crude Oil on the relevant Price Determination Day is below its starting level, the Up-MACRO Holding Trust will be required to make a final payment to the Down-MACRO Holding Trust in an amount proportional to the decrease in the level of that price. The purpose of the final payments under the settlement contracts is to transfer assets between the paired MACRO Holding Trusts such that each trust has cash and Treasuries in an amount equal to its underlying value at the time of settlement.

The Final Distribution on each outstanding MACRO Holding Share on a final scheduled termination date or early termination date will equal its share of the ''underlying value'' (as defined below) of the corresponding MACRO Holding Trust on that date. For purposes of settling the settlement

[29] The ''redemption cash component'' is the cash that must be delivered to a MACRO Holding Trust in connection with a paired optional redemption by the redeeming Authorized Participant to compensate the trust for the excess value that will be delivered to such redeeming Authorized Participant in the form of U.S. Treasury securities delivered to it as a Redemption Distribution.

[30] There is a related transaction fee of $500 for each such exchange involving the MACRO Tradeable Shares of one of the MACRO Tradeable Trusts.

[31] In order to be an Authorized Participant, an entity must (1) be a registered broker-dealer and a member in good standing with the National Association of Securities Dealers, Inc. (''NASD''), or a participant in the securities markets such as a bank or other financial institution that is not required to register as a broker-dealer or be a member of the NASD in order to engage in securities transactions; (2) be a participant in DTC or have indirect access to the clearing facilities of DTC by virtue of a custodial relationship with a DTC participant; (3) not be a benefit plan investor for purposes of the Employee Retirement Income Security Act of 1974; and (4) have entered into a ''participation agreement'' with the depositor, the administrative agent and the trustee which specifies procedures for the Paired Issuance and redemption of paired MACRO Holding Shares.

contracts between the paired MACRO Holding Trusts and making a Final Distribution on the final scheduled termination date or an early termination date, underlying value will include the Up-MACRO earned income accrual and Down-MACRO earned income accrual for the final scheduled termination date or early termination date. Any such Final Distribution by a MACRO Holding Trust will include the cumulative earned income accruals that would have been distributed as a Quarterly Income Distribution if the final scheduled termination date or early termination date had been an ordinary Quarterly Income Distribution date. Each MACRO Tradeable Trust will receive the Final Distribution on each of the MACRO Holding Shares that it holds on deposit and will pass through that Final Distribution to holders of the corresponding MACRO Tradeable Shares, which will be considered to be redeemed.

The amount of cash and/or U.S. Treasury securities delivered in a paired optional redemption by Authorized Participants will always be equal to the combined underlying values of the paired MACRO Holding Trusts, which will consist of the sum of (i) the underlying value of the Up-MACRO Holding Trust on the relevant Redemption Date multiplied by the applicable ''redemption percentage'' for the Up-MACRO Holding Shares and (ii) the underlying value of the Down-MACRO Holding Trust on the relevant Redemption Date multiplied by the applicable ''redemption percentage'' for the Down-MACRO Holding Shares. The ''redemption percentage'' for these purposes is the aggregate number of MACRO Holding Shares of the relevant MACRO Holding Trust that are being redeemed, divided by the aggregate number of such MACRO Holding Shares that are outstanding prior to the redemption. If the redemption order was placed on a Quarterly Income Distribution date, the redeeming Authorized Participant will receive cash. If there was a net increase in the aggregate par amount of the paired MACRO Holding Trusts on any settlement date for a paired optional redemption, because more MACRO Units were created than redeemed, redeeming Authorized Participants will also receive their Redemption Distribution in cash out of the funds delivered to the trusts by the Authorized Participants who created shares on the same date. If any ''Paired Issuances'' (as described below) were effected on the settlement date for the redemption, even if there was a net decrease in the aggregate par amount of the paired MACRO Holding Trusts, redeeming Authorized Participants will receive a portion of their Redemption Distribution in cash out of the funds delivered by the creating Authorized Participants, then from any cash on deposit in the MACRO Holding Trusts from maturing repurchase agreements, and the remaining portion of that Redemption Distribution in U.S. Treasury securities. In all other cases, redeeming Authorized Participants will receive their Redemption Distribution in connection with a paired optional redemption in U.S. Treasury securities.

Paired Issuances

At any time prior to the final scheduled termination date or an early termination date, on any day that is a Price Determination Day, an Authorized Participant may effect a Paired Issuance by directing the paired MACRO Holding Trusts to issue additional shares in a minimum number of Up-MACRO and Down-MACRO Holding Shares constituting one or more MACRO Units. If so directed, the MACRO Holding Trusts will issue on a net basis the additional paired MACRO Holding Shares to the Authorized Participant who may then sell those MACRO Holding Shares directly to qualified investors or deposit all or a portion of them into the Up-MACRO and Down-MACRO Tradeable Trusts and direct the MACRO Tradeable Trusts to issue the appropriate number of additional MACRO Tradeable Shares to it in exchange for the MACRO Holding Shares. For each additional MACRO Holding Share that is deposited into the corresponding MACRO Tradeable Trust, the MACRO Tradeable Trust will issue one additional MACRO Tradeable Share. To create one or more new MACRO Units, an Authorized Participant must place a creation order with the administrative agent at least 30 minutes before the end of trading of light sweet crude oil futures contracts by open outcry on NYMEX at 2:30 p.m. (New York City time) on any Price Determination Day (''Issuance Date''). Concurrently with any Paired Issuance, an Authorized Participant may also simultaneously create MACRO Tradeable Shares by directing the paired MACRO Holding Trusts to issue additional paired MACRO Holding Shares for deposit into the applicable MACRO Tradeable Trusts and directing one or both of the MACRO Tradeable Trusts to issue MACRO Tradeable Shares.

By 10 a.m. New York City time on the next business day after the Issuance Date, or by such other day and time as may be specified in the Participants Agreement, the Authorized Participant must deposit into the paired MACRO Holding Trusts immediately available funds in an amount equal to the combined per share underlying value of the Up-MACRO Holding Shares and the Down-MACRO Holding Shares being created, as measured on the Issuance Date.[32] The Authorized Participant must also deposit a transaction fee of $500 for each of any: (i) Up-MACRO Holding Shares; (ii) Up-MACRO Tradeable Shares; (iii) Down-MACRO Holding Shares; and (iv) Down-MACRO Tradeable Shares being issued (for a maximum fee of $2,000 for any Paired Issuance). By 3 p.m. New York City time on the next business day following the Issuance Date, or by such other day and time as may be specified in the Participants Agreement, the administrative agent will instruct the trustee to deliver the new shares. The trustee will also cause the paired MACRO Holding Trusts to enter into one new settlement contract between them for each new MACRO Unit that is being created. If MACRO Units are being both created and redeemed on the same day, new settlement contracts between the paired MACRO Holding Trusts will be entered into only if there is a net increase in the Up-MACRO and Down-MACRO aggregate par amounts, and existing settlement contracts between the MACRO Holding Trusts will be settled if there is a net decrease in these aggregate par amounts in order to satisfy the requirement that one settlement contract must always be outstanding for each outstanding MACRO Unit. Quarterly Income Distributions on the additional MACRO Holding Shares will be governed by the original income distribution agreement between the paired MACRO Holding Trusts.

The proportion of the funds in the Up-MACRO Holding Trust and the Down-MACRO Holding Trust will initially be 1:1 and this proportion will be maintained throughout the entire transaction by virtue of the requirement that redemptions and Paired Issuances must be done in MACRO Units composed of an equal number of Up-MACRO and Down-MACRO Holding Shares.

Underlying Value

The ''underlying value'' of a MACRO Holding Trust on each Price Determination Day represents the

[32] The amount of funds deposited will reflect the income and the expenses of each of the MACRO Holding Trusts during the current calculation period because those amounts are included as part of the determination of the underlying value of each MACRO Holding Trust.

aggregate amount of the assets in the paired MACRO Holding Trusts to which that MACRO Holding Trust would be entitled if the settlement contracts between the MACRO Holding Trusts were settled on that day. The determination of the ''underlying value'' of a MACRO Holding Trust on a given Price Determination Day is calculated using the following formula, which is designed to ensure that a $1 change in the settlement price of the Applicable Reference Price of Crude Oil will result in a $1 change in the per share underlying value of each MACRO Holding Share:

If the ''ending level'' of the Applicable Reference Price of Crude Oil established and reported by NYMEX or the applicable substitute oil price provider on a Price Determination Day is above the starting level, the ''underlying value'' of the Up-MACRO Holding Trust will equal the sum of:

- The sum of the earned income accruals for that trust for each day that has elapsed during the current calculation period, up to and including the current Price Determination Day,
- The ''investment amount'' for that MACRO Holding Trust on that date, and
- The product of (i) the ''investment amount'' for the other paired MACRO Holding Trust on that date and (ii) the Price Level Percentage Change of the Applicable Reference Price of Crude Oil.

The same formula above will be used to calculate the ''underlying value'' of the Down-MACRO Holding Trust if the ''ending level'' of the Applicable Reference Price of Crude Oil on a Price Determination Day is below the starting level.

If the ''ending level'' of the Applicable Reference Price of Crude Oil on a Price Determination Day is below the starting level, the ''underlying value'' of the Up-MACRO Holding Trust will be calculated using the same formula, except that the third term in the above formula will be subtracted from the sum of the first two terms (instead of being added to them) and the ''investment amount'' used in that third term will be the value for that MACRO Holding Trust (instead of the value for the other paired MACRO Holding Trust on that date). This version of the formula in the previous statement is also applicable to the calculation of the ''underlying value'' of the Down-MACRO Holding Trust if the ''ending level'' of the Applicable Reference Price of Crude Oil on a Price Determination Day is above the starting level.

In connection with these calculations, the ''investment amount'' will equal, on any Quarterly Income Distribution date, the amount of cash that was actually invested on behalf of a MACRO Holding Trust in Treasuries on that Quarterly Income Distribution date, which is required to equal the lesser of (x) the aggregate par amount of its outstanding shares and (y) all funds that the trust holds on deposit on that Quarterly Income Distribution date. The ''investment amount'' on any day during a calculation period (other than the Quarterly Income Distribution date) will equal the aggregate par amount of the MACRO Holding Shares of that MACRO Holding Trust that are outstanding on that day if the amount actually invested on the preceding Quarterly Income Distribution date was equal to the aggregate par amount on that date. If the amount actually invested on the last Quarterly Income Distribution date was less than the aggregate par amount, then the ''investment amount'' for that MACRO Holding Trust for each day of the ensuing calculation period will equal the amount that was actually invested divided by the number of MACRO Holding Shares outstanding on that Quarterly Income Distribution date, multiplied by the number of MACRO Holding Shares that are outstanding on the day on which the calculation is being made. Since the trustee, under the direction of the administrative agent, is required to invest an amount equal to the aggregate par amount in Treasuries on each Quarterly Income Distribution date in accordance with the directions of the administrative agent, the ''investment amount'' for that MACRO Holding Trust should be equal to the aggregate par amount, as increased and decreased by redemptions and Paired Issuances, throughout the ensuing calculation period.[33]

The ''Price Level Percentage Change'' will equal, on any Price Determination Day, the absolute value of (i) the ending level of the Applicable Reference Price of Crude Oil on that Price Determination Day minus the starting level of the Applicable Reference Price of Crude Oil divided by (ii) the starting level. For example, if the Applicable Reference Price of Crude Oil should double from its starting level, the Price Level Percentage Change would be equal to 100% and the Up-MACRO Holding Trust would be entitled to the entire ''investment amount'' in the Down-MACRO Holding Trust if the settlement contracts between the paired MACRO Holding Trusts were to be settled on that day. Reaching this value (100%) would effectively ''cap'' any further upside gains for holders of the Up-MACRO Holding Shares and Up-MACRO Tradeable Shares based on additional increases in the Applicable Reference Price of Crude Oil.

Arbitrage

The Exchange states that market fluctuations in the price of a MACRO Tradeable Share are expected to mirror fluctuations in its per share underlying value (which will be determined by the value of the applicable futures price of light sweet crude oil), similar to the manner in which the price of an ETF share mirrors its net asset value. The Exchange states that this tracking should occur due to arbitrage opportunities that will be available to Authorized Participants if these values should move out of line, with the additional requirement that any arbitrage will require equal numbers of Up-MACRO Tradeable Shares and Down-MACRO Tradeable Shares. For example, if the market prices of the MACRO Tradeable Shares begin to trade downward away from their combined per share underlying values, Authorized Participants will take advantage of the resulting arbitrage opportunity by purchasing the undervalued MACRO Tradeable Shares, exchanging them for MACRO Holding Shares and directing a paired optional redemption at the combined per share underlying values. Conversely, if the market prices of the MACRO Tradeable Shares begin to trade upward away from their combined per share underlying values, Authorized Participants will take advantage of the resulting arbitrage opportunity by delivering cash to the trustee in the amount of the combined per share underlying values, receiving MACRO Holding Shares in a Paired Issuance, and depositing the latter into the respective MACRO Tradeable Trusts in exchange for an equal number of the overvalued MACRO Tradeable Shares, which can be sold in the market. To the extent that an Authorized Participant should choose to hold in inventory any MACRO Holding Shares or MACRO Tradeable Shares in connection with arbitrage opportunities, the Exchange states that such a position can be hedged by using the underlying light sweet crude oil futures.

In contrast to the procedures with respect to certain ETF products, the MACRO Holding Trusts will not

[33] The only case in which this will not be true is if the MACRO Holding Trust's daily fee accrual rate exceeded the daily yield rate on its Treasuries during one or more preceding calculation periods and the resulting deficiency was not made up with income realized by that MACRO Holding Trust during other preceding calculation periods following a general rise in interest rates. If a deficiency does exist during a calculation period, this deficiency will be reflected in the per share underlying value at which Authorized Participants may create and redeem the MACRO Holding Shares.

disseminate on a daily basis the specific holdings of each trust that correspond to the basic unit of creation—a MACRO Unit. This will not be necessary because the creation of new MACRO Holding Shares and MACRO Tradeable Shares by Authorized Participants is accomplished through the deposit of cash instead of securities. Further, the Exchange states that such disclosure is not necessary for price transparency and independent verification of the underlying value calculation because, unlike ETFs, the MACRO Shares are wholly synthetic in nature, and the financial assets whose values primarily determine the underlying value of each MACRO Holding Share and MACRO Tradeable Share (*i.e.*, light sweet crude oil futures contracts) are not actually acquired and held by the MACRO Holding Trusts. The daily fluctuations in market value of the Treasuries that are held by each MACRO Holding Trust are not part of the calculation of underlying value. The Exchange acknowledges that this value that is necessary for the end-of-day calculation of the underlying value of each MACRO Holding Trust (and the portion of that value associated with each MACRO Holding Share and MACRO Tradeable Share) is already fully transparent—the settlement price on NYMEX of the light sweet crude oil futures contract of the designated maturity.

Risk

An investment in the MACRO Holding Shares or the MACRO Tradeable Shares involves a number of risks. An investor could lose his or her entire investment in the MACRO Holding Shares or the MACRO Tradeable Shares, depending on the percentage movement up or down in the Applicable Reference Price of Crude Oil. Further, there is no guarantee as to the amount of any Quarterly Income Distribution, Redemption Distribution, or Final Distribution, and no obligation to make up Quarterly Income Distributions that are not paid due to lack of available funds. The MACRO Tradeable Shares cannot be redeemed, and the right to exchange MACRO Tradeable Shares for MACRO Holding Shares that can be redeemed is limited to Authorized Participants. Further, MACRO Holding Trusts may deliver U.S. Treasury securities instead of cash in a paired optional redemption, which could decrease the income of remaining holders of MACRO Tradeable Shares if the U.S. Treasury securities delivered have higher yields than those remaining in the trust. The return on the MACRO Tradeable Shares is also uncertain because the related trusts may terminate early, and the return is capped due to the fact that neither MACRO Holding Trust is entitled to receive an amount greater than 100% of the assets in the other paired MACRO Holding Trust.

Prospectus Delivery

The Exchange states that each MACRO Tradeable Trust will be deemed to be a statutory underwriter of the related MACRO Holding Shares under the Securities Act and will be subject to the prospectus delivery requirements and liability provisions of the Securities Act in connection with its participation in a ''distribution'' of Up-MACRO Holding Shares. In connection with any Paired Issuance, the Exchange states that any Authorized Participant that creates a MACRO Unit will be deemed to be a statutory underwriter of the paired MACRO Holding Shares and the related MACRO Tradeable Shares and will be subject to the prospectus delivery requirements and liability provisions of the Securities Act. The Exchange states that dealers that are not ''underwriters'' but nonetheless are participating in a distribution, and thus are dealing with MACRO Holding Shares or MACRO Tradeable Shares that are part of an ''unsold allotment'' within the meaning of the Securities Act, would be unable to take advantage of the prospectus delivery exemption provided by Section 4(3) of the Securities Act. The Exchange states that Dealers unable to rely on the Section 4(3) prospectus delivery exemption will be subject to the prospectus delivery requirements of the Securities Act.

Fees and Expenses

As indicated in note 26 above, the sum of the daily fee accruals based on a rate of 1.50% (1.60% until the second anniversary of the closing date) per annum will cover the payment of all fees and expenses of each MACRO Holding Trust that will be applied against invested assets.[34] On each Quarterly Income Distribution date, each of the paired MACRO Holding Trusts is required to deposit the ''fee deduction amount'' (as defined above) into the fee payment account to be applied to the payment of the expenses and fees incurred by that MACRO Holding Trust and the related MACRO Tradeable Trust during the preceding calculation period. After first being used to pay the expenses of the trusts, which will include: (i) Registration fees; (ii) prospectus printing and delivery expenses; (iii) trust administration expenses; and (iv) treasury settlement expenses, the remaining funds in the fee payment account will be applied to pay the fees charged by entities that provide services or license intellectual property to the trusts. These fees include: (i) The fee payable to the trustee for administering the MACRO Holding Trust and the related MACRO Tradeable Trust; (ii) the fee payable to the administrative agent for administrating the Treasuries held by the MACRO Holding Trust and performing various calculations and other services on behalf of the trusts, and to the marketing agent for its marketing and distribution services; (iii) the fee payable to MacroMarkets for sublicensing to the trusts the right to reference the settlement price of the light sweet crude oil futures contract and the NYMEX name; (iv) the licensing fee payable to MacroMarkets for the use of its intellectual property related to the patented MACROs structure; (v) fees payable to the independent accountants; (vi) fees payable to the Amex for acting as listing exchange and calculation agent; and (vii) legal fees. These expenses and fees payable by each MACRO Holding Trust will accrue during each calculation period and will be payable in arrears on each Quarterly Income Distribution date out of the fee deduction amount.

To the extent that the remaining fee deduction amount after payment of expenses is insufficient to pay in full all of the fees, MacroMarkets and Claymore Securities, Inc. will reduce the fees payable to each of them by the MACRO Holding Trust. If any deficiencies in the payment of the fees and expenses of the trust continue to exist after the waiver of these fees, these deficiencies will be paid by MACRO Securities Depositor, LLC, the depositor for the trusts. If any funds remain on deposit in the fee payment account after the fees and expenses of the MACRO Holding Trust and related MACRO Tradeable Trust have been paid in full on a Quarterly Income Distribution date, the trustee will deliver these excess funds to the depositor as additional compensation.

Periodic Dissemination of Intraday Per Share Values for MACRO Tradeable Shares

During each trading day, the Amex, acting as the calculation agent, will publish to the Consolidated Tape System (''CTS''), at least every 15 seconds during the entire time that the MACRO Tradeable Shares trade on the Amex (normally 9:30 a.m. to 4:15 p.m. each Price Determination Day), an indicated value, referred to as an

[34] Such daily fee accruals, however, would not cover transactional costs associated with purchase, sale, redemption and creation of shares, and certain other potential liabilities such as, for example, indemnities.

Indicative Intraday Value (''IIV''), for the underlying value per share of both the Up-MACRO Tradeable Shares and the Down-MACRO Tradeable Shares. The Amex will also disseminate at least every 15 seconds the related percentage change in the Applicable Reference Price of Crude Oil. The Amex will also publish these values on its Web site. The purpose of this disclosure is to promote liquidity and intraday price transparency with respect to the underlying value per share of the MACRO Tradeable Shares. To enable this calculation, the Amex will receive real time price data from the NYMEX for the light sweet crude oil futures contract that trades on the NYMEX from two major market data vendors, from the opening of trading of the light sweet crude oil futures contract on NYMEX at 10 a.m. to the close of trading of the MACRO Tradeable Shares on the Amex at 4:15 p.m. (New York City time).

Because the NYMEX market for the light sweet crude oil futures contract will be closed for portions of the Amex trading day, the IIV calculated values will become fixed at such time as the NYMEX contract stops trading in the regular trading session.[35] During such time periods, however, if trading in the NYMEX light sweet crude oil futures contract is occurring on the NYMEX electronic aftermarket system, then those trades will be used to update IIV values.

The Amex will make available through its in-house systems, for use by the specialist and market makers, the IIV values distributed over the CTS. This data will also be available to Amex surveillance systems and personnel for their purposes.

Dissemination of Other Information on Price Determination Days

Pursuant to a separate calculation agency agreement with MACRO Securities Depositor, LLC, MacroMarkets and the trusts, the calculation agent will perform a number of duties for the Up-MACRO Tradeable Trust, the Up-MACRO Holding Trust, the Down-MACRO Tradeable Trust and the Down-MACRO Holding Trust. In addition to its periodic (at least every 15 seconds) calculation and dissemination of (1) the value of the percentage change in the light sweet oil futures contract of the designated maturity from the starting level of the Applicable Reference Price of Crude Oil and (2) IIVs for the underlying value of each MACRO Holding Trust that is allocable to each Up-MACRO Tradeable Share and Down-MACRO Tradeable Share, the calculation agent will also post to its Web site by 7:15 p.m. New York City time on each Price Determination Day the following information:

- Any corrections made by NYMEX to the Applicable Reference Price of Crude Oil reported on previous Price Determination Days;[36] and
- The closing price of the Up-MACRO Tradeable Shares and the Down-MACRO Tradeable Shares on the Amex.

The administrative agent will maintain a Web site that is publicly accessible at no charge and will contain the following information posted by the trustee on each Price Determination Day:[37]

- The Price Level Percentage Change of the Applicable Reference Price of Crude Oil;
- The underlying value[38] of the Up-MACRO Holding Trust and the per share underlying value of the Up-MACRO Holding Shares and the Up-MACRO Tradeable Shares; and
- The underlying value of the Down-MACRO Holding Trust and the per share underlying value of the Down-MACRO Holding Shares and the Down-MACRO Tradeable Shares.

Availability of Information Regarding MACRO Tradeable Shares

The depositor will prepare, in accordance with the requirements of the Act, quarterly reports on Form 10–Q, annual reports on Form 10–K, and current reports on Form 8–K, containing information about the MACRO Holding Trusts and the MACRO Tradeable Trusts. The depositor will file such reports with the Commission and the trustee will send copies to Cede & Co., as nominee of the Depository Trust Company (''DTC''), any other registered holder of the MACRO Tradeable Shares or the MACRO Holding Shares, and such other parties as may be specified in the trust agreements. DTC forwards these reports to its participants, and shareholders may obtain copies by contacting their brokers. The annual reports will include financial statements prepared in accordance with accounting principles generally accepted in the United States of America.

The Form 10–Q reports will include the following information as of each Quarterly Income Distribution date:

- The aggregate par amount of the outstanding MACRO Tradeable Shares of each of the MACRO Tradeable Trusts;
- The aggregate par amount of the outstanding MACRO Holding Shares of each of the MACRO Holding Trusts;
- The underlying value of each of the MACRO Holding Trusts and the portion of that underlying value that is allocable to each of the related MACRO Holding Shares, in each case, prior to any Quarterly Income Distributions being made on that Quarterly Income Distribution date;
- The amount of income realized on the Treasuries in each of the MACRO Holding Trusts and the amount of fees accrued for each trust;
- The amount, if any, by which the aggregate par amount exceeds the asset amount for either of the MACRO Holding Trusts;
- The available income, if any, in each of the MACRO Holding Trusts, and the available income allocable to each related MACRO Holding Share;
- The payments to be made by one of the MACRO Holding Trusts under the income distribution agreement between the MACRO Holding Trusts and the amount of cash and/or Treasuries delivered under any settlement contracts between the MACRO Holding Trusts that were settled since the preceding Quarterly Income Distribution date, in the aggregate and per share;
- The number of MACRO Holding Shares issued in Paired Issuances, and the number of MACRO Holding Shares redeemed in paired optional redemptions during the preceding calculation period, as well as the amount of cash and U.S. Treasury securities delivered in such paired optional redemptions, in the aggregate and per share;

[35] The IIV calculated value between the opening of trading of the MACRO Tradeable Shares on the Amex at 9:30 a.m. and the opening of trading of the light sweet crude oil futures contract on NYMEX at 10 a.m. (New York City time) will be based on the final price from the prior trading day.

[36] As described above, a Price Determination Day is each day on which trading of the light sweet crude oil futures contract of the designated maturity occurs by open outcry on the trading floor of the NYMEX. *See supra*, discussion of Price Determination Days under ''Description of the Reference Price—the Applicable Reference Price of Crude Oil.''

[37] The issuer has represented that all market participants will have access to this data at the same time and, therefore, no market participant will have a time advantage in using such data.

[38] Conceptually, the ''underlying value'' per share of MACRO Holding Shares and MACRO Tradeable Shares is similar to the ''net asset value'' that is calculated for many other securities. For MACRO securities, however, net asset value is not meaningful because the respective per share values are not determined by the total value of the assets held by each MACRO Holding Trust at any point in time. This is because assets are not transferred daily between the MACRO Holding Trusts to settle the contractual transfer obligations between them. For example, transfers of ''principal'' between the MACRO Holding Trusts only take place in connection with paired optional redemptions or upon termination of the trusts. The underlying value, however, takes into account the value of each MACRO Holding Trust as if the settlement contracts between the trusts were settled on that date by the transfer of assets, reflecting the obligations of the trusts to each other based on the Applicable Reference Price of Crude Oil on that date.

• The Quarterly Income Distribution to be made by each MACRO Holding Trust on that Quarterly Income Distribution date, in the aggregate and per share, for both the related MACRO Holding Shares and the MACRO Tradeable Shares; and

• If the Quarterly Income Distribution date is the final scheduled termination date, an early termination date, or a Redemption Date, the Final Distribution or Redemption Distribution, as the case may be, to be made by each MACRO Holding Trust on that Quarterly Income Distribution date, in the aggregate and per share, for both the related MACRO Holding Shares and the MACRO Tradeable Shares.

Termination Triggers

On the Quarterly Income Distribution date following the occurrence of any of the following events (''Termination Triggers''), such date being an ''early termination date,'' the trustee will cause the MACRO Holding Trusts to settle all of the settlement contracts between the paired MACRO Holding Trusts and then declare a Final Distribution in redemption of all of the outstanding MACRO Holding Shares, based on the underlying value of each MACRO Holding Trust on the Price Determination Day preceding the early termination date. This underlying value may be higher or lower than the underlying value at the time when the Termination Trigger occurred, which is one of the risks to investors of early termination. The portion of the Final Distribution received by each MACRO Tradeable Trust (based on the MACRO Holding Shares held by that trust) will be passed through to the holders of the corresponding MACRO Tradeable Shares. Following this Final Distribution, the MACRO Holding Shares and MACRO Tradeable Shares will be considered to be redeemed in full and will cease to be outstanding. The Termination Triggers are:

• Any of the following circumstances persisting for five (5) consecutive business days: (i) The Applicable Reference Price of Crude Oil is not established by NYMEX or the substitute oil price provider; (ii) NYMEX or such substitute oil price provider refuses to make that price available to the administrative agent for the purpose of calculating underlying value; or (iii) (a) NYMEX terminates the license it has granted to MacroMarkets to use and sublicense certain of its futures prices or does not agree to a renewal thereof after the expiration of its initial 5-year term, and the depositor and MacroMarkets are unable to enter into a substitute licensing agreement with the Dow Jones Energy Service or (b) in the event that the depositor and MacroMarkets have already entered into a substitute licensing agreement with the Dow Jones Energy Service or another substitute oil price provider, such substitute oil price provider terminates that license and, in the case of either (a) or (b), the beneficial owners of the MACRO Holding Shares do not select a substitute oil price provider or the depositor and MacroMarkets are unable to enter into a substitute licensing agreement with the substitute oil price provider that was selected by these beneficial owners;

• The Applicable Reference Price of Crude Oil rises to or above 185% of the starting level or falls to or below 15% of the starting level and, in either case, remains at that level for three (3) consecutive Price Determination Days;

• A MACRO Tradeable Trust or a MACRO Holding Trust becomes required to register as an investment company under the 1940 Act;

• A MACRO Tradeable Trust or a MACRO Holding Trust is adjudged by a court having competent jurisdiction to be bankrupt or insolvent; or such court grants an order for relief or approves as properly filed a petition seeking reorganization, arrangement, adjustment or composition under the Bankruptcy Code or any other applicable law, or appointing a receiver, liquidator, assignee or sequestrator of any such trust or of any substantial part of its property, or ordering the winding up or liquidation of its affairs; or any such trust commences a voluntary case or proceeding under the Bankruptcy Code or any other applicable law, or an involuntary case or proceeding is commenced against any such trust, seeking any of the foregoing and such case or proceeding continues undismissed or unstayed and in effect for 90 consecutive days (in which case any payments under the income distribution agreement and the settlement contracts between the paired MACRO Holding Trusts and any Quarterly Income Distribution, Redemption Distribution or Final Distribution to be made by either of the MACRO Holding Trusts, or passed through on the MACRO Tradeable Shares by the related MACRO Tradeable Trust, may be subject to delays pending the resolution of bankruptcy proceedings);

• A MACRO Tradeable Trust or a MACRO Holding Trust becomes a commodities pool that is regulated under the Commodity Exchange Act;

• DTC becomes unwilling or unable to act as the depository under the trust agreements and no suitable replacement is willing and able to assume those duties;

• The administrative agent resigns or is unable to perform its duties or becomes bankrupt or insolvent, and no suitable replacement is willing and able to assume those duties;

• The depositor elects to terminate a MACRO Holding Trust, and 66⅔% of the beneficial owners of both MACRO Holding Trusts, each voting as a separate class, consent to such termination; or

• The ''investment amount'' (as defined above) for either MACRO Holding Trust is reduced to fifty (50) million dollars or a lesser amount after previously reaching an amount equal to two hundred (200) million dollars or the failure to reach an amount equal to two hundred (200) million dollars within a period of six (6) months following the closing date and the depositor elects to terminate a MACRO Holding Trust.

The administrative agent will be responsible for monitoring the occurrence of Termination Triggers that are related to a specified increase or decrease in the Applicable Reference Price of Crude Oil and the failure by NYMEX or the applicable oil price provider to establish the Applicable Reference Price of Crude Oil or its refusal to make it available to the administrative agent. The administrative agent must notify the depositor and the trustee of any of these occurrences. The trustee will be responsible for notifying the depositor and the administrative agent of the occurrence of the Termination Triggers described in the third through fifth bullet points above.

Criteria for Initial and Continued Listing

The MACRO Tradeable Shares will be subject to the criteria in proposed Amex Rule 1402 for initial and continued listing of Paired Trust Shares. The proposed continued listing criteria provides for the delisting or removal from listing of the Up-MACRO Tradeable Shares or Down-MACRO Tradeable Shares, as the case may be, under any of the following circumstances:

• Following the initial twelve month period from the date of commencement of trading of the Up-MACRO Tradeable Shares or Down-MACRO Tradeable Shares: (i) If the corresponding MACRO Tradeable Trust has more than 60 days remaining until termination and there are fewer than 50 record and/or beneficial holders of the Up-MACRO Tradeable Shares or Down-MACRO Tradeable Shares for 30 or more consecutive trading days; (ii) if the corresponding MACRO Tradeable Trust

has fewer than 50,000 Up-MACRO Tradeable Shares or Down-MACRO Tradeable Shares issued and outstanding; or (iii) if the combined market value of all Up-MACRO Tradeable Shares and Down-MACRO Tradeable Shares together is less than $1,000,000;

- If the intraday level of the Applicable Reference Price of Crude Oil is no longer calculated or available on at least a 15-second delayed basis on the Amex Web site during the time the MACRO Tradeable Shares trade on the Amex from a source unaffiliated with the depositor, the custodian, MacroMarkets, a MACRO Holding Trust, a MACRO Tradeable Trust or the Exchange;
- If the underlying value of the corresponding MACRO Holding Trust is not made available on the administrative agent's publicly accessible Web site on a daily basis to all market participants at the same time;
- If the intraday indicative value of the underlying value of each Up-MACRO Tradeable Share or Down-MACRO Tradeable Share, as the case may be, is no longer made available on at least a 15-second delayed basis through CTS during the time the Tradeable Shares trade on the Amex;
- If a benchmark other than the light sweet crude oil futures contract traded on the NYMEX is selected for the determination of the Applicable Reference Price of Crude Oil, unless the Exchange files with the Commission a related proposed rule change pursuant to Rule 19b-4 seeking approval to continue trading the MACRO Tradeable Shares and such rule change is approved by the Commission; [39] or
- If such other event shall occur or condition exists which in the opinion of the Exchange makes further dealings on the Exchange inadvisable.

It is anticipated that a minimum of 150,000 Up-MACRO Tradeable Shares and 150,000 Down-MACRO Tradeable Shares will be required to be outstanding at the start of trading. It is anticipated that the initial price of an Up-MACRO Tradeable Share and a Down-MACRO Tradeable Share will each be approximately $60 per share, or the price of a barrel of light sweet crude oil on the last Price Determination Day prior to the closing date. The Exchange believes that the anticipated minimum number of MACRO Tradeable Shares outstanding at the start of trading is sufficient to provide adequate market liquidity and to further the objective of providing a simple and cost effective means of making an investment that is similar to an investment in light sweet crude oil.

The Exchange represents that it prohibits the initial and/or continued listing of any security that is not in compliance with Rule 10A–3 under the Act.[40]

Original and Annual Listing Fees

The Amex original listing fee applicable to the listing of the MACRO Tradeable Shares is $5,000 for the Up-MACRO Tradeable Shares and $5,000 for the Down-MACRO Tradeable Shares. In addition, the annual listing fee applicable under Section 141 of the Amex Company Guide will be based upon the year-end aggregate number of shares in all series of MACRO Tradeable Shares (including series based on other Reference Prices) outstanding at the end of each calendar year.

Disclosure

The Exchange, in an ''Information Circular'' (described below) to Exchange members and member organizations, will inform members and member organizations, prior to commencement of trading, of the prospectus delivery requirements applicable to the MACRO Tradeable Shares. The issuing MACRO Tradeable Trust will deliver a prospectus to investors who purchase such newly issued MACRO Tradeable Shares.

Exchanges of MACRO Tradeable Shares; Paired Issuances and Paired Optional Redemptions of MACRO Holding Shares in MACRO Unit Aggregations

In the Information Circular (described below), members and member organizations will be informed that procedures for exchanges of MACRO Tradeable Shares for the underlying MACRO Holding Shares and for Paired Issuances and paired optional redemptions of MACRO Holding Shares are described in the Prospectus and that MACRO Holding Shares are issuable and redeemable only in MACRO Units and only by Authorized Participants.

Trading Rules

MACRO Tradeable Shares are equity securities subject to Amex Rules governing the trading of equity securities, including, among others, rules governing priority, parity and precedence of orders, specialist responsibilities and account opening and customer suitability (Amex Rule 411). Initial equity margin requirements of 50% will apply to transactions in MACRO Tradeable Shares. MACRO Tradeable Shares will trade on the Amex from 9:30 a.m. until 4:15 p.m. New York time each business day and will trade in a minimum price variation of $0.01 pursuant to Amex Rule 127. Trading rules pertaining to odd-lot trading in Amex equities (Amex Rule 205) will also apply.

Amex Rule 154, Commentary .04(c) provides that stop and stop limit orders to buy or sell a security (other than an option, which is covered by Amex Rule 950(f) and Commentary thereto) the price of which is derivatively priced based upon another security or index of securities, may with the prior approval of a Floor Official, be elected by a quotation, as set forth in Commentary .04(c) (i-v). The Exchange has designated MACRO Tradeable Shares as eligible for this treatment.[41]

MACRO Tradeable Shares will be deemed ''Eligible Securities,'' as defined in Amex Rule 230, for purposes of the Intermarket Trading System Plan and therefore will be subject to the trade through provisions of Amex Rule 236 which require that Amex members avoid initiating trade-throughs for ITS securities. Specialist transactions in MACRO Tradeable Shares, as an Authorized Participant, made in connection with the creation of MACRO Tradeable Shares and the exchange of MACRO Tradeable Shares for MACRO Holding Shares will not be subject to the prohibitions of Amex Rule 190.[42] Unless exemptive or no-action relief is available, MACRO Tradeable Shares will be subject to the short sale rules, and other rules, under the Act. If exemptive or no-action relief is provided, the Exchange will issue a notice detailing the terms of the exemption or relief. The MACRO Tradeable Shares will generally be subject to the Exchange's stabilization rule, Amex Rule 170.

The adoption of proposed Amex Rule 1403 relating to certain specialist prohibitions will address potential conflicts of interest in connection with acting as a specialist in Paired Trust Shares. Specifically, proposed Amex Rule 1403 provides that the prohibitions in Amex Rule 175(c) apply to a specialist in Paired Trust Shares so that the specialist or affiliated person may not act or function as a market maker in

[39] In the event the Exchange believes that a change in the benchmark or pricing source for the Applicable Reference Price of Crude Oil is only temporary, the Exchange may contact the Commission staff to discuss the matter.

[40] *See* Rule 10A–3(c)(7).

[41] *See* Securities Exchange Act Release No. 29063 (April 10, 1991), 56 FR 15652 (April 17, 1991) (SR–Amex–90–31) at note 9, regarding the Exchange's designation of equity derivative securities as eligible for such treatment under Amex Rule 154, Commentary .04(c).

[42] *See* Commentary .05 to Amex Rule 190.

an asset, commodity or other economic interest underlying the Reference Price, options, related futures or options on futures, or any other related derivatives. An affiliated person of the specialist consistent with Amex Rule 193 may be afforded an exemption to act in a market making capacity on another market center, other than as a specialist in the asset, commodity or other economic interest underlying the Reference Price, options, related futures or options on futures, or any other related derivatives. In particular, proposed Amex Rule 1403 provides that an approved person of an equity specialist that has established and obtained Exchange approval for procedures restricting the flow of material, non-public market information between itself and the specialist member organization, and any member, officer, or employee associated therewith, may act in a market making capacity, other than as a specialist in Paired Trust Shares on another market center, in the asset, commodity or other economic interest underlying the Reference Price, options, related futures or options on futures, or any other related derivatives.

Adoption of proposed Amex Rule 1404 will also ensure that specialists handling the Paired Trust Shares provide the Exchange with all the necessary information relating to their trading in the asset, commodity or other economic interest underlying the Reference Price, options, related futures or options on futures, or any other related derivatives. As a general matter, the Exchange has regulatory jurisdiction over its members, member organizations and approved persons of a member organization. The Exchange also has regulatory jurisdiction over any person or entity controlling a member organization as well as a subsidiary or affiliate of a member organization that is in the securities business.

The MACRO Tradeable Shares will be registered in book entry form through DTC in the United States or with Clearstream Banking, societe anonyme or Euroclear Bank S.A./NV in Europe. Trading in MACRO Tradeable Shares will be effected until 4:15 p.m. New York time each business day. The minimum trading increment for such shares will be $.01

Trading Halts

Prior to the commencement of trading, the Exchange will issue an Information Circular (described below) to members informing them of, among other things, Exchange policies regarding trading halts in MACRO Tradeable Shares. First, the circular will advise that trading will be halted in the event the market volatility trading halt parameters set forth in Amex Rule 117 have been reached. Second, with respect to a halt in trading that is not specified above, the Exchange may also consider other relevant factors and the existence of unusual conditions or circumstances that may be detrimental to the maintenance of a fair and orderly market. During any trading halt in MACRO Tradeable Shares, the underlying light sweet crude oil futures contracts are expected to continue to trade on the NYMEX because the NYMEX does not provide for trading halts in these contracts.

In the event that: (a) The underlying value of each MACRO Holding Trust or the per share underlying values of each of the Up-MACRO Holding Shares, the Up-MACRO Tradeable Shares, the Down-MACRO Holding Shares or the Down-MACRO Tradeable Shares are not disseminated daily to all market participants at the same time, (b) the IIV, updated at least every fifteen (15) seconds on the CTS, for the underlying value per share of both the Up-MACRO Tradeable Shares and the Down-MACRO Tradeable Shares is no longer calculated or available during the time the MACRO Tradeable Shares trade on the Amex, or (c) the price of the NYMEX light sweet crude oil futures contract is no longer available at least every fifteen (15) seconds on the Amex Web site during the time the MACRO Tradeable Shares trade on the Amex[43] (*e.g.*, due to a temporary disruption in connection with either the pricing of the light sweet crude oil futures contract on the NYMEX or the transmission of real time price data from the NYMEX), then the Exchange will halt trading.[44] However, in the case of (b) or (c) involving interruption to the required dissemination of IIVs or futures contract prices, the Exchange may consider relevant factors and exercise its discretion regarding the halt or suspension of trading during the day in which the interruption to the dissemination of the IIVs or the futures contract prices occurs. If the interruption to the dissemination of the IIVs or the futures contract prices persists past the trading day in which it occurred, the Exchange will halt trading no later than the beginning of the trading day following the interruption.

Suitability

The Information Circular (described below) will inform members and member organizations of the characteristics of the MACRO Tradeable Shares and of applicable Exchange rules, as well as of the requirements of Amex Rule 411 (Duty to Know and Approve Customers).

The Exchange notes that pursuant to Amex Rule 411, members and member organizations are required in connection with recommending transactions in the MACRO Tradeable Shares to have a reasonable basis to believe that a customer is suitable for the particular investment given reasonable inquiry concerning the customer's investment objectives, financial situation, needs, and any other information known by such member.

Information Circular

The Amex will distribute an Information Circular to its members in connection with the trading of MACRO Tradeable Shares. The Information Circular will discuss the special characteristics and risks of trading this type of security. Specifically, the Information Circular, among other things, will discuss what the MACRO Tradeable Shares are, how they are created and exchanged for MACRO Holding Shares by Authorized Participants, the requirement that members and member firms deliver a prospectus to investors purchasing the MACRO Tradeable Shares prior to or concurrently with the confirmation of a transaction, applicable Amex rules, dissemination of information regarding the ''underlying value'' of each paired MACRO Holding Trust and the share of that ''underlying value'' allocable to one Up-MACRO Holding Share, one Up-MACRO Tradeable Share, one Down-MACRO Holding Share and one Down-MACRO Tradeable Share, trading information and applicable suitability rules. The Information Circular will also explain that the MACRO Holding Trusts and the MACRO Tradeable Trusts are subject to various fees and expenses described in the Registration Statement. The Information Circular will also reference the fact that the Securities and Exchange Commission has no jurisdiction over the trading of the NYMEX light sweet crude oil futures contract.

The Information Circular will also notify members and member organizations about the procedures for

[43] Trading in the MACRO Tradeable Shares will not be halted on the Amex, however, simply because price data from the NYMEX based on current trading is not available outside the normal open outcry trading hours of light sweet crude oil futures contracts on the NYMEX from 10 a.m. to 2:30 p.m., New York City time. During those daily periods, from 9:30 a.m. to 10 a.m. and from 2:30 p.m. to 4:15 p.m. (New York City time), the IIVs disseminated by the Amex will be based on ''stale'' data.

[44] In each of these circumstances, the Exchange may contact the Commission staff to discuss the matter.

purchases and paired optional redemptions of the MACRO Holding Shares held in the MACRO Tradeable Trusts, which may only be effected in MACRO Units by Authorized Participants. The Information Circular will advise members of their suitability obligations with respect to recommended transactions to customers in the MACRO Tradeable Shares. The Information Circular will also discuss any relief, if granted, by the Commission or the staff from any rules under the Act.

Surveillance

Exchange surveillance procedures applicable to trading in the proposed MACRO Tradeable Shares will be similar to those applicable to trust issued receipts, Portfolio Depository Receipts and Index Fund Shares currently trading on the Exchange. The AMEX surveillance systems use data published over CTS (*e.g.*, the IIVs) in its normal course of business. In the event this group needs additional information to audit transactions in MACRO Tradeable Shares, the NYMEX and Amex have executed an information sharing agreement to support the surveillance responsibilities of the two exchanges.

2. Statutory Basis

The Amex believes that the proposed rule change, as amended, is consistent with the requirements of Section 6(b) of the Act [45] in general, and furthers the objectives of Section 6(b)(5),[46] of the Act in particular, in that it is designed to prevent fraudulent and manipulative acts and practices, to promote just and equitable principles of trade, to foster cooperation and coordination with persons engaged in facilitating transactions in securities, and to remove impediments to and perfect the mechanism of a free and open market and a national market system.

B. Self-Regulatory Organization's Statement on Burden on Competition

The Exchange does not believe that the proposed rule change, as amended, will impose any burden on competition that is not necessary or appropriate in furtherance of the purposes of the Act.

C. Self-Regulatory Organization's Statement on Comments on the Proposed Rule Change Received From Members, Participants or Others

The Exchange has neither solicited nor received written comments on the proposed rule change, as amended.

[45] 15 U.S.C. 78f(b).

[46] 15 U.S.C. 78f(b)(5).

III. Date of Effectiveness of the Proposed Rule Change and Timing for Commission Action

Within 35 days of the date of publication of this notice in the **Federal Register** or within such longer period (i) as the Commission may designate up to 90 days of such date if it finds such longer period to be appropriate and publishes its reasons for so finding or (ii) as to which the self-regulatory organization consents, the Commission will:

(A) By order approve such proposed rule change, as amended, or

(B) institute proceedings to determine whether the proposed rule change should be disapproved.

The Commission is considering granting accelerated approval of the proposed rule change at the end of a 15-day comment period.[47]

IV. Solicitation of Comments

Interested persons are invited to submit written data, views, and arguments concerning the foregoing, including whether the proposed rule change, as amended, is consistent with the Exchange Act. Comments may be submitted by any of the following methods:

Electronic Comments

- Use the Commission's Internet comment form (*http://www.sec.gov/rules/sro.shtml);* or
- Send an e-mail to *rule-comments@sec.gov*. Please include File Number SR–Amex–2006–82 on the subject line.

Paper Comments

- Send paper comments in triplicate to Nancy M. Morris, Secretary, Securities and Exchange Commission, 100 F Street, NE., Washington, DC 20549–1090.

All submissions should refer to File Number SR–Amex–2006–82. This file number should be included on the subject line if e-mail is used. To help the Commission process and review your comments more efficiently, please use only one method. The Commission will post all comments on the Commission's Internet Web site (*http://www.sec.gov/rules/sro.shtml).* Copies of the submission, all subsequent amendments, all written statements with respect to the proposed rule change that are filed with the Commission, and all written communications relating to the proposed rule change between the Commission and any person, other than those that may be withheld from the public in accordance with the provisions of 5 U.S.C. 552, will be available for inspection and copying in the Commission's Public Reference Room. Copies of the filing also will be available for inspection and copying at the principal office of the Amex. All comments received will be posted without change; the Commission does not edit personal identifying information from submissions. You should submit only information that you wish to make available publicly. All submissions should refer to File Number SR–Amex–2006–82 and should be submitted on or before November 17, 2006.

For the Commission, by the Division of Market Regulation, pursuant to delegated authority.[48]

Jill M. Peterson,

Assistant Secretary.

[FR Doc. E6–18478 Filed 11–1–06; 8:45 am]

BILLING CODE 8011–01–P

[47] The Amex has requested accelerated approval of this proposed rule change prior to the 30th day after the date of publication of the notice of the filing thereof, following the conclusion of a 15-day comment period. Telephone conference among Brian Trackman and Michou H.M. Nguyen, Special Counsels, Division of Market Regulation, Commission, and William Love, Associate General Counsel, Exchange, on October 25, 2006.

[48] 17 CFR 200.30–3(a)(12).

SECURITIES AND EXCHANGE COMMISSION

[Release No. 34–54657; File No. SR–CHX–2006–29]

Self-Regulatory Organizations; Chicago Stock Exchange, Inc.; Notice of Filing and Immediate Effectiveness of Proposed Rule Change and Amendment No. 1 Thereto Relating to Participant Fees and Credits

October 26, 2006.

Pursuant to Section 19(b)(1) of the Securities Exchange Act of 1934 (the ''Act''),[1] and Rule 19b–4 thereunder,[2] notice is hereby given that on September 29, 2006, the Chicago Stock Exchange, Inc. (''CHX'' or ''Exchange'') filed with the Securities and Exchange Commission (''Commission'') the proposed rule change as described in Items I, II, and III below, which Items have been prepared by the CHX. On October 20, 2006, the CHX filed Amendment No. 1 to the proposed rule change.[3] The CHX has designated this

[1] 15 U.S.C. 78s(b)(1).

[2] 17 CFR 240.19b–4.

[3] Amendment No. 1 made technical changes to correct the marking of the proposed rule text and made clarifying changes to the discussion in the purpose section. Amendment No. 1 made no changes to the proposed fees as set forth in the original filing.

proposal as one establishing or changing a member due, fee, or other charge imposed by the CHX under Section 19(b)(3)(A)(ii) of the Act,[4] and Rule 19b–4(f)(2) thereunder,[5] which renders the proposal effective upon filing with the Commission. The Commission is publishing this notice to solicit comments on the proposed rule change, as amended, from interested persons.

I. Self-Regulatory Organization's Statement of the Terms of Substance of the Proposed Rule Change

The CHX proposes to revise its Schedule of Participant Fees and Credits (''Fee Schedule'') to provide for fees, charges and credits contemplated by the Exchange's new trading model being implemented by the CHX this fall. The text of the proposed rule change is available on the CHX's Web site (*http://www.chx.com/rules/proposed_rules.htm*), at the principal office of the CHX, and at the Commission's Public Reference Room.

II. Self-Regulatory Organization's Statement of the Purpose of, and Statutory Basis for, the Proposed Rule Change

In its filing with the Commission, the CHX included statements concerning the purpose of, and basis for, the proposed rule change and discussed any comments it received on the proposed rule change. The text of these statements may be examined at the places specified in Item IV below. The CHX has prepared summaries, set forth in Sections A, B, and C below, of the most significant aspects of such statements.

A. Self-Regulatory Organization's Statement of the Purpose of, and Statutory Basis for, the Proposed Rule Change

1. Purpose

Throughout 2006, the Exchange has been working on the design and development of a new trading model centered around a core matching system that will provide for fully automated electronic matching of orders (''Matching System''), as well as corresponding rules and regulatory initiatives. On September 29, 2006, the Exchange's proposed rules relating to the new trading model were approved by the Commission.[6] The Exchange anticipates making the transition to its new trading model commencing the week of October 23, 2006. As further detailed in SR–CHX–2006–05, the Exchange's new trading model differs from the current CHX structure in several notable ways. First, the CHX will no longer operate from a traditional physical exchange floor, but rather will operate an entirely electronic facility. Second, the CHX will no longer maintain a specialist program, in which specialists maintain books of orders in designated issues.[7] Finally, as noted above, orders will be matched by a fully automated Matching System.[8]

This fundamental shift in the Exchange's trading model necessitates certain changes in the Exchange's business model, including the fees, charges and credits that it assesses its participants (''Participants''). After significant deliberation, including a comprehensive review of other self-regulatory organizations and their respective billing structures, the Exchange has formulated a revised Fee Schedule that the Exchange believes more closely resembles the fee structures that have been implemented in connection with other electronic trading facilities.

Summarized below are the provisions of the Fee Schedule that will change from the previous version. To facilitate an orderly transition to the new trading model, the Fee Schedule contemplates charging Participants under current rates, with new Fee Schedule provisions to become applicable as issues are transitioned to the new trading model and become eligible for trading in the Matching System. The Fee Schedule delineates which fees will be ''phased out'' during and after the transition to the new trading model.

Participant Access & Registration (Sections A–D)

• *Permit Fees:* In connection with the Exchange's demutualization on February 9, 2005, the Exchange's rules were amended to require that each Participant hold at least one Trading Permit in order to access the CHX.[9] The Exchange's Fee Schedule was amended to provide for annual Trading Permit fees in lieu of annual member dues; the amount of the Trading Permit Annual Fee ($6,000) was identical to the amount of member dues immediately prior to demutualization. Trading Permit fees have not increased for nearly two years, since the demutualization transaction.

Pursuant to a recent proposed rule change (the ''Trading Permit Rule Changes''), each Participant Firm will be required to hold only one Trading Permit per firm, regardless of the number of its registered representatives.[10] These rule changes reflect the Exchange's transition from a floor-based exchange (where it was appropriate to require multiple Trading Permits if a Participant Firm had multiple representatives on the CHX floor) to an electronic facility (where all Participant Firms have equivalent electronic access to the Exchange's facilities).

The revised proposed Fee Schedule provides that the annual fee for each Trading Permit will increase from $6,000 to $7,200 for each Trading Permit purchased or renewed after October 1, 2006. The Trading Permit cancellation fee will increase to the lesser of $2,400 or $600 per month for the remainder of the one-year term of the permit, effective with the renewal of each Trading Permit after October 1, 2006.[11]

The CHX believes that these changes to the Trading Permit fee structure are reasonable under the circumstances. The Trading Permit Annual Fee has not increased for some time, warranting a modest increase. Moreover, the Trading Permit Rule Changes will result in aggregate savings to CHX Participants.[12]

With respect to the Trading Permit cancellation fee, as set forth in previous proposed rule changes relating to charges for cancellation of Trading

[4] 15 U.S.C. 78s(b)(3)(A)(ii).

[5] 17 CFR 240.19b–4(f)(2).

[6] *See* Securities Exchange Act Release No. 54550 (September 29, 2006); 71 FR 59563 (October 10, 2006) (SR–CHX–2006–05) (referred to as the ''NTM Approval Order'').

[7] In the new trading model, Participants may register as either market makers or institutional brokers (formerly known as floor brokers), or may simply operate as unregistered order-sending firms that route orders to the CHX for execution.

[8] The CHX new trading model does contemplate special handling of orders by CHX institutional brokers, but all such orders must be entered by institutional brokers into an electronic functionality known as Brokerplex. Brokered orders must clear the Matching System prior to execution and must otherwise be executed in accordance with the rules set forth in new CHX Article 17, which governs institutional brokers, as well as applicable law, including Regulation NMS.

[9] *See* Securities Exchange Act Release No. 51149 (February 8, 2005), 70 FR 7531 (February 14, 2005) (SR–CHX–2004–26). Prior to demutualization, the Exchange's rules provided for access by ''members'' who owned or leased CHX ''seats.'' The demutualization rule changes provide for access by ''Participants'' who hold ''trading permits.''

[10] *See* Securities Exchange Act Release No. 54494 (September 25, 2006); 71 FR 58023 (October 2, 2006) (SR–CHX–2006–23). The Exchange believes that the Trading Permit Rule Changes will provide for an even more equitable allocation of fees among Exchange Participants, because no firm will be required to bear a disproportionate share of total Trading Permit fees by holding multiple Trading Permits. Instead, each Participant's Trading Permit fee will be identical, because each Participant will only hold one Trading Permit.

[11] *See* Section A of the Fee Schedule.

[12] Although not all CHX Participant firms will realize savings due to a reduction in the number of Trading Permits, total Trading Permit fees will be reduced substantially. In order to offset a portion of this aggregate reduction, the Exchange believes that the proposed modest increase in annual Trading Permit fees is appropriate.

Permits,[13] the CHX believes that it is reasonable to provide for some fee relief for Participants whose trading permits are cancelled intrayear. The Exchange also believes, however, that it is necessary for the Exchange to have an adequate basis on which to budget and project annual revenues. Accordingly, the Exchange believes that a Trading Permit cancellation fee, including a modest increase thereof, remains appropriate.

• SRO Fee: This fee will increase from $100/month to $250/month. This fee will be assessed per Trading Permit.[14] As set forth above with respect to Trading Permit fees, this slight increase in the per permit fee is offset by the aggregate savings that will be achieved by CHX Participants due to the new ''one firm, one permit'' rule made effective by the Trading Permit Rule Changes.

• Registration Fees: The CHX will continue to assess a $500 annual fee for each trader who is engaged in proprietary securities trading for an off-Exchange Participant Firm that is solely a CHX Participant and for which the CHX is the Designated Examining Authority (''DEA'').[15] This fee will be pro-rated in the first year of a trader's registration, based on the quarter in which that registration occurs.[16]

Other changes to Section C of the Fee Schedule reflect the transition away from a floor-based trading environment, with references to the floor modified to reflect access to the Exchange's facilities. The fee for floor clerks has also been eliminated.

• Matching System Port Charges: The revised proposed Fee Schedule provides for a port charge of $400 per month for each Participant connection to the Matching System, other than connections through the Brokerplex functionality that is used by CHX institutional brokers.[17] This fee is a new addition to the Fee Schedule and reflects the Exchange's transition to a fully-electronic trading platform instead of a floor-based market. The Exchange believes that, in the new trading model, the port charge provides a reasonable means of allocating a portion of Matching System expenses to those Participant Firms that maintain connectivity to the Matching System.[18]

Transaction and Order Routing Fees (Section E)

Transaction fees will be modified in several ways as the Exchange transitions to its new trading model.[19]

• Matching System: Section E of the Fee Schedule sets forth the transaction fees that will be charged for executions in the Matching System once it is operative, including Matching System routing fees. This section also contains an odd-lot Matching System transaction fee, which is charged to the Participant that submits the odd-lot order to the Matching System. The Exchange believes that the new transaction fees for the Matching System are fair and reasonable, particularly in light of the fee structures implemented in connection with other electronic facilities. The Exchange believes that the ''take/provide'' model has become a widely-recognized industry model, and the Exchange's rates are in line with other similarly-situated market centers.

To facilitate an orderly transition, Section E.7 of the Fee Schedule preserves the pre- new trading model fee structure, which will continue to provide the basis for transaction and order processing fees if an issue is not yet traded in the Matching System, but will no longer be applicable once an issue transitions to the new trading model and is available for trading in the Matching System. Section E.7 of the Fee Schedule also contains a new provision establishing a charge for outbound ITS or NMS Linkage Plan orders.[20]

• Institutional Broker Agency Fees: Section E.3 of the Fee Schedule outlines the fees that will be charged to the Participant Firm that executes an order through an institutional broker, if the broker facilitates the execution of the order on the Exchange or in another market over ITS or any later linkage plan. These fees have not changed from the fees set forth in Section F.4(e) and (f) of the previous Fee Schedule; only their location within the Fee Schedule has changed.[21]

Credits (Section F)

The Exchange's credit structure has been revised to adjust for the new trading model as well as Regulation NMS, which impacts allocation and payment of market data fees.[22]

• Institutional Brokers: In lieu of the previous formula used for floor broker credits, which incorporated significant variables including market data fees, each institutional broker will be eligible for a monthly transaction fee credit equal to 18% of the transaction fees received by the Exchange each month for agency trades executed through the institutional broker.[23]

• Specialist Credits: These credits will continue to be available to specialists in issues that they trade as specialist during the transition to the new trading model.[24] As an issue moves into the Matching System for trading, specialist credits will be pro-rated or eliminated for that issue, based on the date that the issue becomes eligible for trading in the Matching System. Specialists (or other eligible Participants) who elect to register as market makers in the new trading model may then earn market data rebates for liquidity-providing trades or crosses submitted to the Matching System.

• Market Data Rebates for Matching System Trades: Each Participant Firm[25]

[13] *See* Securities Exchange Act Release No. 52815 (November 21, 2005), 70 FR 71572 (November 29, 2005) (SR–CHX 2005–31); Securities Exchange Act Release No. 54495 (September 25, 2006), 71 FR 58025 (October 2, 2006) (SR–CHX–2006–27) (providing for a cancellation fee in the event a Trading Permit is cancelled intrayear).

[14] *See* Section B of the Fee Schedule.

[15] *See* Section C of the Fee Schedule.

[16] This provision formerly provided for a $500 initial registration fee and $500 annual fee (with no proration for partial years) for each off-floor trader who was engaged in proprietary securities trading for a Participant Firm for which the CHX is the DEA. Given the elimination of the $500 initial registration fee and the addition of the proration language, the changes to this provision will result in net savings by affected Participant Firms.

[17] *See* Section D of the Fee Schedule. Section D formerly contained provisions relating to assignment of issues to CHX specialists. This process will no longer occur because all specialist issues are being migrated to the new trading model. Accordingly, all former text of Section D has been deleted in its entirety.

[18] The former Fee Schedule allocated a portion of these costs by means of various MAX-related connectivity charges, which will be eliminated for issues as they migrate from MAX (the Exchange's current semi-automated execution platform) to the new trading model.

[19] *See* Section E of the Fee Schedule.

[20] This provision is necessary in order to implement the CHX's participation in the exchange-to-exchange billing arrangement associated with the ''Plan for the Purpose of Creating and Operating an Intermarket Communications Linkage Pursuant to Section 11A(a)(3)(B) of the Securities Exchange Act of 1934'' (''Linkage Plan''), which took effect on October 1, 2006. *See* Securities Exchange Act Release No. 54548 (September 29, 2008), 71 FR 59159 (October 6, 2006) (SR–CHX–2006–28) (approving Linkage Plan exchange-to-exchange billing procedures); Securities Exchange Act Release No. 54551 (September, 2006), 71 FR 59148 (October 6, 2006) (approving Linkage Plan). When an outbound Linkage Plan commitment is executed on another Linkage Participant market, such market will directly invoice the CHX for a transaction fee equal to the transaction fee that it would charge its own member for such an execution. The CHX is then responsible for payment of such invoice. The new CHX Fee Schedule provision permits the CHX to collect a corresponding fee from the Participant who generated the outbound Linkage Plan commitment.

[21] Reference to ''floor'' broker also has changed to ''institutional'' broker.

[22] *See* Section F of the Fee Schedule.

[23] This new institutional broker credit replaces the former floor broker credit provision set forth in Section M.2 of the previous Fee Schedule.

[24] Formerly set forth in Section M.1, the specialist credit provisions are unchanged and will remain in place until an issue migrates to the new trading model.

[25] Institutional brokers are not eligible to receive tape credits; they are instead eligible for the transaction fee credits previously described.

will be eligible for a tape credit, applied on a quarterly basis, equal to 50% of monthly tape revenue from the Consolidated Tape Association (less all direct CTA costs) generated by liquidity-providing trades or crosses submitted to the Matching System by a Participant Firm in a particular Tape A or Tape B security. By its terms, this credit is not available unless an issue has migrated to the Matching System.

The terms of this credit are identical to the terms of the Specialist Credit discussed above. However, the CHX has added a provision indicating that tape credits will be applied on a quarterly basis, after the Exchange receives its payments from the reporting plans.[26] The identical nature of the credits is intentional. As set forth above, the Specialist Credit is available until an issue migrates to the CHX Matching System, at which point Specialist Credits will no longer be available,[27] but the former specialist (or another eligible Participant) may receive a Market Data Rebate in lieu of the Specialist Credit, on account of liquidity-providing trades or crosses submitted to the Matching System.

• Other Credit Provisions: Section F.4 of the Fee Schedule, relating to Two-Sided Quote Providers, remains unchanged but has been relocated from former Section M.4. Section F.5 of the Fee Schedule, governing unavailability of credits if a Participant's payment to the Exchange is more than 60 days past due, also is unchanged from the version that became effective shortly before this Fee Schedule was submitted.[28]

Co-Location Fees (Section G)

These provisions have not changed; they merely have been relocated from former Section H to current Section G of the Fee Schedule.

Clearing Support Fees (Section H)

There are no changes to this section, which formerly was Section I of the Fee Schedule, except that the Exchange is deleting provisions relating to CUSIP fees.

Listing Fees (Section I)

There are no substantive changes to this section, which formerly was Section J.

Market Regulation and Market Surveillance Fees (Section J)

There are no changes to this section, which formerly was Section K of the Fee Schedule, except that the provision relating to DEA Examination Fees has been modified to delete a footnote relating to exemptions and to clarify that the charge is assessed per Participant Firm.

Specialist Fixed Fees (Section K)

These provisions have not changed with respect to calculation of the aggregate fixed fees; they merely have been relocated from former Section E to current Section K of the Fee Schedule. This provision has also been modified to reflect the transition to the new trading model and to provide a basis for pro rating the fixed fees as issues migrate to the new trading model over the next several months. Fixed fees will continue to be charged for issues traded by CHX specialists; once an issue migrates to the new trading model and is no longer traded by a CHX specialist, the fixed fee due from the specialist for that month will be prorated based on the transition date.

Space Charges (Section L)

The rule changes relating to the new trading model provide that the Exchange will no longer be considered to have a physical trading floor from a regulatory perspective, although the current trading floor space will remain available for leasing by Participants (and ultimately perhaps by non-Participants). During the transitional period this fall, the existing billing structure for booth space, post space and electrical or structural modifications to such space will remain in place, through December 31, 2006. After that date, any applicable space charges will be incorporated into separate lease agreements between the Exchange and entities that lease space on the Exchange's former trading floor.[29] The Exchange is in the process of finalizing its comprehensive space plan for the former trading floor, including the terms under which it will offer space for lease to Participants. These terms, and corresponding lease documentation, will be available for consideration by Participants later this fall.

Equipment, Information Services & Technology Charges (Section M)

As with space charges, these fees will remain in place until December 31, 2006. Except as set forth below, there are no substantive changes to this section. Most changes are intended to delete obsolete provisions relating to the Exchange's former OTC specialist program.

• Broker Connectivity Charge/Credit: All network and connectivity charges are rebilled monthly to institutional brokers that access the network, based on the proportion of each firm's use of the network during the month.[30] Until completion of the new trading model rollout, institutional brokers will be eligible for a monthly network/connectivity fee credit, equal to a total monthly credit of $15,000, allocated among institutional broker firms based on each firm's respective percentage of total monthly transaction fee credits.[31]

Supplies, Rulebooks and Reports (Section N)

This section includes two new charges:

• Brokerplex Report Charge: There will be a charge of $50 per month to provide reports of Participant Firm activity, by trader.[32]

• Trade and order data: This charge is intended to help the Exchange defray the expenses of responding to Participants' data requests, which often require significant customization and other accommodation of specific requests.[33]

Late Fees (Section O)

These provisions have not changed; they merely have been relocated from former Section N to current Section O of the Fee Schedule.

2. Statutory Basis

The Exchange believes that the proposed rule change is consistent with Section 6(b)(4) of the Act[34] in that it provides for the equitable allocation of reasonable dues, fees and other charges among its members and is in line with other self-regulatory organizations that have implemented trading platforms similar to the CHX new trading model.

B. Self-Regulatory Organization's Statement on Burden on Competition

The Exchange does not believe that the proposed rule change will impose any burden on competition.

[26] The Exchange has also added a provision indicating that the tape credit will be based on the tape revenue generated by *liquidity-providing* trades or Crosses submitted to the Matching System by the Participant Firm. (emphasis added). Telephone conversation between Kathleen Boege, Vice President and Associate General Counsel, CHX, Joseph Morra, Special Counsel, Division of Market Regulation (''Division''), Commission, and Sara Gillis, Attorney, Division, Commission, on October 24, 2006.

[27] There will no longer be a specialist assigned to such issue.

[28] *See* Securities Exchange Act Release No. 54522 (September 27, 2006), 71 FR 58456 (October 3, 2006) (SR–CHX–2006–26).

[29] *See* Section L of the Fee Schedule.

[30] *See* Section M of the Fee Schedule.

[31] *See* Section F.2 of the Fee Schedule for a description of this credit.

[32] *See* Section N.3 of the Fee Schedule.

[33] *See* Section N.4 of the Fee Schedule.

[34] 15 U.S.C. 78f(b)(4).

C. Self-Regulatory Organization's Statement on Comments on the Proposed Rule Change Received From Members, Participants or Others

No written comments were either solicited or received.

III. Date of Effectiveness of the Proposed Rule Change and Timing for Commission Action

Because the foregoing proposed rule change establishes or changes a member due, fee, or other charge imposed by the Exchange, it has become effective pursuant to Section 19(b)(3)(A) of the Act [35] and Rule 19b–4(f)(2) [36] thereunder. At any time within 60 days of the filing of such proposed rule change, the Commission may summarily abrogate such rule change if it appears to the Commission that such action is necessary or appropriate in the public interest, for the protection of investors, or otherwise in furtherance of the purposes of the Act.[37]

IV. Solicitation of Comments

Interested persons are invited to submit written data, views, and arguments concerning the foregoing, including whether the proposed rule change, as amended, is consistent with the Act. Comments may be submitted by any of the following methods:

Electronic Comments

- Use the Commission's Internet comment form (*http://www.sec.gov/rules/sro.shtml*); or
- Send an e-mail to *rule-comments@sec.gov*. Please include File No. SR–CHX–2006–29 on the subject line.

Paper Comments

- Send paper comments in triplicate to Nancy M. Morris, Secretary, Securities and Exchange Commission, Station Place, 100 F Street, NE., Washington, DC 20549–1090.

All submissions should refer to File Number SR–CHX–2006–29. This file number should be included on the subject line if e-mail is used. To help the Commission process and review your comments more efficiently, please use only one method. The Commission will post all comments on the Commission's Internet Web site (*http://www.sec.gov/rules/sro.shtml*). Copies of the submission, all subsequent amendments, all written statements with respect to the proposed rule change that are filed with the Commission, and all written communications relating to the proposed rule change between the Commission and any person, other than those that may be withheld from the public in accordance with the provisions of 5 U.S.C. 552, will be available for inspection and copying in the Commission's Public Reference Room. Copies of such filing also will be available for inspection and copying at the principal office of the CHX. All comments received will be posted without change; the Commission does not edit personal identifying information from submissions. You should submit only information that you wish to make available publicly. All submissions should refer to File Number SR–CHX–2006–29 and should be submitted on or before November 24, 2006.

For the Commission, by the Division of Market Regulation, pursuant to delegated authority.[38]

Jill M. Peterson,

Assistant Secretary.

[FR Doc. E6–18481 Filed 11–1–06; 8:45 am]

BILLING CODE 8011–01–P

[35] 15 U.S.C. 78s(b)(3)(A).

[36] 17 CFR 19b–4(f)(2).

[37] For purposes of calculating the 60-day period within which the Commission may summarily abrogate the proposed rule change under Section 19(b)(3)(C) of the Act, the Commission considers the period to commence on October 20, 2006, the date on which the CHX filed Amendment No. 1. *See* 15 U.S.C. 78s(b)(3)(C).

[38] 17 CFR 200.30–3(a)(12).

SECURITIES AND EXCHANGE COMMISSION

[Release No. 34–54653; File No. SR–NYSE–2006–94]

Self-Regulatory Organizations; New York Stock Exchange LLC; Notice of Filing and Immediate Effectiveness of Proposed Rule Change Relating to Rule 122 (Orders With More Than One Broker) Until the Availability of Full d-Quote Functionality in a Particular Security or February 5, 2007, Whichever Comes First

October 26, 2006.

Pursuant to Section 19(b)(1) of the Securities Exchange Act of 1934 (''Act'') [1] and Rule 19b–4 thereunder,[2] notice is hereby given that on October 25, 2006, the New York Stock Exchange LLC (''NYSE'' or ''Exchange'') filed with the Securities and Exchange Commission (''Commission'') the proposed rule change as described in Items I and II below, which Items have been prepared by the Exchange. NYSE filed the proposed rule change pursuant to Section 19(b)(3) of the Act [3] and Rule 19b–4(f)(6) thereunder,[4] which renders the proposed rule change effective upon filing with the Commission. The Commission is publishing this notice to solicit comments on the proposed rule change from interested persons.

I. Self-Regulatory Organization's Statement of the Terms of Substance of the Proposed Rule Change

NYSE seeks to amend Exchange Rule 122 (Orders with More than One Broker) for a period of time commencing from the operative date of this proposed rule change until the availability of full d-Quoting [5] functionality in a particular security or February 5, 2007, whichever comes first. The proposed rule change would permit Floor brokers to maintain discretionary e-Quotes (''d-Quotes'') and CAP–DI orders [6] in a security on the same side of the market for the same order that are capable of trading at the same price. The text of the proposed rule change is available on the Exchange's Web site (*http://www.nyse.com*), at the Exchange's Office of the Secretary, and at the Commission's Public Reference Room.

II. Self-Regulatory Organization's Statement of the Purpose of, and Statutory Basis for, the Proposed Rule Change

In its filing with the Commission, the Exchange included statements concerning the purpose of and basis for the proposed rule change and discussed any comments it received on the proposed rule change. The text of these statements may be examined at the places specified in Item IV below. The Exchange has prepared summaries, set forth in Sections A, B, and C below, of the most significant aspects of such statements.

A. Self-Regulatory Organization's Statement of the Purpose of, and Statutory Basis for, the Proposed Rule Change

1. Purpose

The Exchange proposes to permit Floor brokers to enter discretionary e-Quotes and CAP–DI orders in a security on the same side of the market for the same order that are capable of trading at the same price for a limited

[1] 15 U.S.C. 78s(b)(1).

[2] 17 CFR 240.19b–4.

[3] 15 U.S.C. 78s(b)(3)(A).

[4] 17 CFR 240.19b–4(f)(6).

[5] *See* Securities Exchange Act Release No. 54577 (October 5, 2006), 71 FR 60208 (October 12, 2006).

[6] *See* Exchange Rules 13 and 123A.30(a). Exchange Rule 123A.30(a) describes a CAP–DI order as: ''The elected or converted portion of a 'percentage order that is convertible on a destabilizing tick and designated immediate execution or cancel election' (''CAP–DI order'') may be automatically executed and may participate in a sweep.''

period of time—that is, from the operative date of this proposed rule change until the availability of full d-Quoting functionality in a particular security or February 5, 2007, whichever comes first. The Exchange believes that discretionary e-Quote capabilities will be fully implemented in Phase IV of the Hybrid Market,[7] which is scheduled to commence rolling out in late December 2006. This amendment will allow Floor brokers to participate electronically in certain trades they would otherwise miss while full d-Quoting functionality is being implemented. As such, the amendment enhances the competitive position between Floor brokers (on behalf of customer orders) and specialist proprietary trading that d-Quoting was designed to assist.

Currently, d-Quote functionality permits Floor brokers to assign discretionary price instructions to their e-Quotes. Pursuant to these instructions, a d-Quote may trade with marketable and non-marketable incoming orders, by trading with such orders at a price better than the Exchange best bid or offer. Currently, the functionality to interact with a non-marketable incoming order (*i.e.*, an order that would become the new Exchange best bid or offer) has not been implemented. However, specialists are able to interact with non-marketable incoming orders via their algorithmic systems subject to certain requirements. Specifically, a specialist can send electronically a ''hit bid'' or ''take offer'' message based on an incoming order that would create a new best bid or best offer. This allows the specialist to trade electronically with the newly published bid or offer. Until d-Quoting is fully implemented, a Floor broker only has the ability to interact manually with such new bid or offer. Accordingly, the speed disparity between a manual action and an electronic one places the Floor broker at a competitive disadvantage.

A Floor broker can seek to trade at the bid or offer price by manually ''hitting the bid'' or ''taking the offer.'' They can also send a CAP–DI order to the specialist for conversion or election at that price. Marketable CAP–DI orders are automatically converted and trade along with specialist proprietary executions. Accordingly, by allowing Floor brokers to have CAP–DI orders and d-Quotes, the Floor brokers retain the ability to compete with specialist algorithmic trading for executions involving marketable incoming orders via discretionary pricing instructions, but do not miss participating in executions when specialists algorithmically hit a bid or take an offer.

Exchange Rule 122 currently prevents Floor brokers who have transmitted part of an order to a specialist for execution (such as a CAP–DI order) from bidding or offering on behalf of the retained portion of such order at a price at which the transmitted part may be quoted or executed. Because a CAP–DI may execute at the same price as a d-Quote, the Exchange seeks to amend Rule 122 to permit Floor brokers to maintain both d-Quotes and CAP–DI orders in the same security for the account of the same principal that are capable of being executed at the same price.

This filing applies to those securities subject to the Pilot[8] currently operating in conjunction with the implementation of Hybrid Market Phase III.

2. Statutory Basis

The Exchange believes that the proposed rule change is consistent with Section 6(b) of the Act[9] in general, and furthers the objectives of Section 6(b)(5) of the Act[10] in particular, in that it is designed to promote just and equitable principles of trade, to remove impediments to and perfect the mechanism of a free and open market and a national market system and, in general, to protect investors and the public interest. The Exchange believes that the proposed rule change is also designed to support the principles of Section 11A(a)(1) of the Act[11] in that it seeks to assure economically efficient execution of securities transactions, the practicability of brokers executing investors' orders in the best market, and an opportunity for investors' orders to be executed without the participation of a dealer.

B. Self-Regulatory Organization's Statement on Burden on Competition

The Exchange does not believe that the proposed rule change will impose any burden on competition that is not necessary or appropriate in furtherance of the purposes of the Act.

C. Self-Regulatory Organization's Statement on Comments on the Proposed Rule Change Received From Members, Participants or Others

The Exchange has neither solicited nor received written comments on the proposed rule change.

III. Date of Effectiveness of the Proposed Rule Change and Timing for Commission Action

Because the foregoing proposed rule change does not: (i) Significantly affect the protection of investors or the public interest; (ii) impose any significant burden on competition; and (iii) by its terms, become operative for 30 days from the date on which it was filed, or such shorter time as the Commission may designate if consistent with the protection of investors and the public interest, it has become effective pursuant to Section 19(b)(3)(A) of the Act[12] and Rule 19b–4(f)(6) thereunder.[13]

A proposed rule change filed under Rule 19b–4(f)(6) normally may not become operative prior to 30 days after the date of filing. However, Rule 19b–4(f)(6)(iii)[14] permits the Commission to designate a shorter time if such action is consistent with the protection of investors and the public interest. The Exchange has requested that the Commission waive the 30-day operative delay and designate the proposed rule change immediately operative upon filing. The Commission believes that waiver of the 30-day operative delay is consistent with the protection of investors and the public interest. Specifically, the Commission believes that the proposal should enable floor brokers to compete with specialists in certain trades on behalf of their customers, while the Exchange is in the process of implementing the d-Quote function. Accordingly, the Commission designates the proposal to be effective and operative upon filing with the Commission until the availability of full d-Quote functionality in a particular security or February 5, 2007, whichever comes first.[15]

At any time within 60 days of the filing of the proposed rule change, the Commission may summarily abrogate such proposed rule change if it appears to the Commission that such action is necessary or appropriate in the public interest, for the protection of investors,

[7] The Commission approved the Hybrid Market on March 22, 2006. *See* Securities Exchange Act Release No. 53539 (March 22, 2006), 71 FR 16353 (March 31, 2006).

[8] *See* Securities Exchange Act Release Nos. 54578 (October 5, 2006), 71 FR 60216 (October 12, 2006) and 54610 (October 16, 2006), 71 FR 62142 (October 23, 2006).

[9] 15 U.S.C. 78f(b).

[10] 15 U.S.C. 78f(b)(5).

[11] 15 U.S.C. 78k–1(a)(1).

[12] 15 U.S.C. 78s(b)(3)(A).

[13] 17 CFR 240.19b–4(f)(6).

[14] 17 CFR 240.19b–4(f)(6)(iii).

[15] For purposes only of waiving the operative delay for this proposal, the Commission has considered the proposed rule's impact on efficiency, competition, and capital formation. *See* 15 U.S.C. 78c(f).

or otherwise in furtherance of the purposes of the Act.

IV. Solicitation of Comments

Interested persons are invited to submit written data, views and arguments concerning the foregoing, including whether the proposed rule change is consistent with the Act. Comments may be submitted by any of the following methods:

Electronic Comments

- Use the Commission's Internet comment form (*http://www.sec.gov/rules/sro.shtml*); or
- Send an e-mail to *rule-comments@sec.gov.* Please include File Number SR–NYSE–2006–94 on the subject line.

Paper Comments

- Send paper comments in triplicate to Nancy M. Morris, Secretary, Securities and Exchange Commission, 100 F Street, NE., Washington, DC 20549–1090.

All submissions should refer to File Number SR–NYSE–2006–94. This file number should be included on the subject line if e-mail is used. To help the Commission process and review your comments more efficiently, please use only one method. The Commission will post all comments on the Commission's Internet Web site (*http://www.sec.gov/rules/sro.shtml*). Copies of the submission, all subsequent amendments, all written statements with respect to the proposed rule change that are filed with the Commission, and all written communications relating to the proposed rule change between the Commission and any person, other than those that may be withheld from the public in accordance with the provisions of 5 U.S.C. 552, will be available for inspection and copying in the Commission's Public Reference Room. Copies of such filing also will be available for inspection and copying at the principal office of the Exchange. All comments received will be posted without change; the Commission does not edit personal identifying information from submissions. You should submit only information that you wish to make available publicly. All submissions should refer to File Number SR–NYSE–2006–94 and should be submitted on or before November 24, 2006.

For the Commission, by the Division of Market Regulation, pursuant to delegated authority.[16]

Nancy M. Morris,

Secretary.

[FR Doc. E6–18450 Filed 11–1–06; 8:45 am]

BILLING CODE 8011–01–P

SECURITIES AND EXCHANGE COMMISSION

[Release No. 34–54655; File No. SR–NYSEArca–2006–48]

Self-Regulatory Organizations; NYSE Arca, Inc.; Order Approving Proposed Rule Change To Amend NYSE Arca Equities, Inc.'s Clearly Erroneous Executions Rule To Include an Appeal Fee for the NYSE Arca Marketplace (f/k/a the Archipelago Exchange)

October 26, 2006.

On August 11, 2006, NYSE Arca, Inc. (''NYSE Arca'' or ''Exchange'') filed with the Securities and Exchange Commission (''Commission'') a proposed rule change pursuant to Section 19(b)(1) of the Securities Exchange Act of 1934 (''Act'')[1] and Rule 19b–4 thereunder,[2] to assess a fee associated with the appeals process of NYSE Arca Equities, Inc. (''NYSE Arca Equities'') Rule 7.10. The proposed rule change was published for comment in the **Federal Register** on September 22, 2006.[3] The Commission received no comments on the proposal. This order approves the proposed rule change.

NYSE Arca proposes to amend NYSE Arca Equities Rule 7.10 governing clearly erroneous executions (''CEEs'') on the NYSE Arca Marketplace (f/k/a the Archipelago Exchange), the equities trading facility of NYSE Arca Equities. Specifically, under the proposed rule change, if an Equity Trading Permit (''ETP'') Holder appeals a CEE decision made by an NYSE Arca Equities officer to the CEE Panel and the CEE Panel subsequently upholds the decision, the ETP Holder would be assessed a $500.00 fee. The Exchange believes that assessing a $500.00 fee against any ETP Holder who appeals a CEE decision that is subsequently upheld by the CEE Panel would discourage frivolous and abusive uses of the CEE appeal process. The Exchange noted that some ETP Holders have taken advantage of the appeals process by appealing all decisions in which they are involved, including decisions that involve a *de minimis* value.

After careful review, the Commission finds that the proposed rule change is consistent with the requirements of the Act and the rules and regulations thereunder applicable to a national securities exchange.[4] In particular, the Commission finds that the proposed rule change is consistent with Section 6(b)(4) of the Act,[5] which requires that the rules of an exchange provide for the equitable allocation of reasonable dues, fees, and other charges among its members and issuers and other persons using its facilities, and with Section 6(b)(5) of the Act,[6] which requires that the rules of an exchange be designed to promote just and equitable principles of trade, remove impediments to and perfect the mechanism of a free and open market and a national securities system, and, in general, protect investors and the public interest. The Commission believes that the proposed fee is reasonable as a method to discourage frivolous uses by ETP Holders of the Exchange's CEE appeal process. In addition, the Commission believes that the proposal would not unduly affect the rights of an ETP Holder to appeal to the CEE Panel the decisions of NYSE Arca Equities officers with respect to transactions that are alleged to involve a clearly erroneous execution.

It is therefore ordered, pursuant to Section 19(b)(2) of the Act,[7] that the proposed rule change (SR–NYSEArca–2006–48) is approved.

For the Commission, by the Division of Market Regulation, pursuant to delegated authority.[8]

Nancy M. Morris,

Secretary.

[FR Doc. E6–18449 Filed 11–1–06; 8:45 am]

BILLING CODE 8011–01–P

---

[16] 17 CFR 200.30–3(a)(12).

[1] 15 U.S.C. 78s(b)(1).

[2] 17 CFR 240.19b–4.

[3] *See* Securities Exchange Act Release No. 54466 (September 18, 2006), 71 FR 55537.

[4] In approving this proposed rule change, the Commission has considered the proposed rule's impact on efficiency, competition, and capital formation. *See* 15 U.S.C. 78c(f).

[5] 15 U.S.C. 78f(b)(4).

[6] 15 U.S.C. 78f(b)(5).

[7] 15 U.S.C. 78s(b)(2).

[8] 17 CFR 200.30–3(a)(12).

SECURITIES AND EXCHANGE COMMISSION

[Release No. 34–54652; International Series Release No. 1298; File No. SR–Phlx–2006–34]

Self-Regulatory Organizations; Philadelphia Stock Exchange, Inc.; Notice of Filing of Proposed Rule Change and Amendments No. 1 and 2 Relating to U.S. Dollar-Settled Foreign Currency Options

October 25, 2006.

Pursuant to Section 19(b)(1) of the Securities Exchange Act of 1934, as amended (''Act'') [1] and Rule 19b–4 thereunder,[2] notice is hereby given that on May 12, 2006, the Philadelphia Stock Exchange, Inc. (''Phlx'' or ''Exchange'') filed with the Securities and Exchange Commission (''Commission'') the proposed rule change as described in Items I, II, and III below, which Items have been prepared by the Exchange. On September 29, 2006, the Exchange filed Amendment No. 1,[3] and on October 20, 2006, the Exchange filed Amendment No. 2.[4] The Commission is publishing this notice to solicit comments on the proposed rule change, as amended, from interested persons.

I. Self-Regulatory Organization's Statement of the Terms of Substance of the Proposed Rule Change

The Phlx proposes to list U.S. dollar-settled foreign currency options (''FCOs'') on the British pound and the Euro (together, the ''Currencies''), and to adopt rules and rule amendments to permit the trading of U.S. dollar-settled FCOs on the Exchange's electronic trading platform for options, Phlx XL.[5] The Exchange also proposes to amend a number of existing rules relating to U.S. dollar-settled FCOs, and to amend various rules to delete outdated references to the German mark, Italian lira, Spanish peseta and the French franc.

The text of the proposed rule change, as amended, is available on the Exchange's Web site at *http://www.phlx.com*, at Phlx's principal office, and at the Commission's Public Reference Room.

II. Self-Regulatory Organization's Statement of the Purpose of, and Statutory Basis for, the Proposed Rule Change

In its filing with the Commission, the Phlx included statements concerning the purpose of, and basis for, the proposed rule change, as amended, and discussed any comments it received on the proposed rule change, as amended. The text of these statements may be examined at the places specified in Item IV below. The Phlx has prepared summaries, set forth in Sections A, B, and C below, of the most significant aspects of such statements.

A. Self-Regulatory Organization's Statement of the Purpose of, and the Statutory Basis for, the Proposed Rule Change

1. Purpose

According to the Phlx, the purpose of the proposed rule change is to permit the Exchange to expand its product offerings and revitalize FCOs by listing and trading U.S. dollar-settled FCOs on the Currencies on Phlx XL.[6] The contract specifications, including certain amendments to the Exchange's existing rules applicable to U.S. dollar-settled FCOs, and the trading rules for these FCOs are discussed in detail below.[7]

i. Contract Specifications and Amendments to U.S. Dollar-Settled FCO Rules

Background. The Exchange has listed and traded physical delivery FCOs issued by The Options Clearing Corporation (''OCC'') on a number of currencies since 1982.[8] For a period of time during the 1990's the Exchange also listed and traded U.S. dollar-settled FCOs on the German mark and the Japanese yen.[9] The U.S. dollar-settled FCOs were known and marketed as ''Dollar Denominated Delivery'' or ''3D'' FCOs. The U.S. dollar-settled FCOs were cash-settled, European-style options issued by OCC that allowed holders to receive U.S. dollars representing the difference between the current foreign exchange spot price [10] and the exercise price of the option. Specifically, upon exercise of an in-the-money U.S. dollar-settled FCO structured as a call, the holder received, from OCC, U.S. dollars representing the difference between the exercise strike price and the closing settlement value of the U.S. dollar-settled FCO contract multiplied by the number of units of currency covered by the contract.[11] For a U.S. dollar-settled FCO structured as a put, the holder received U.S. dollars representing the excess of the exercise price over the closing settlement value of the U.S. dollar-settled FCO contract multiplied by the number of units of foreign currency covered by the contract. Unlike other Phlx-traded FCOs, U.S. dollar-settled FCOs that are in-the-money by any amount on the expiration date would be exercised automatically by OCC, while U.S. dollar-settled FCOs that are out-of-the-money at expiration would expire worthless.

Proposal. The Exchange now proposes to list and trade U.S. dollar-settled FCOs on the Currencies on Phlx XL.[12] The Exchange also proposes to

[1] 15 U.S.C. 78s(b)(l).

[2] 17 CFR 240.19b–4.

[3] *See* Form 19b–4 dated September 29, 2006 (''Amendment No. 1''). Amendment No. 1 replaced the original filing in its entirety.

[4] *See* Form 19b–4 dated October 20, 2006 (''Amendment No. 2''). Amendment No. 2 replaced the Amendment No. 1 in its entirety.

[5] *See* Securities Exchange Act Release No. 49832 (June 8, 2004), 69 FR 33442 (June 15, 2004) (SR–Phlx–2003–59).

[6] The Exchange will file a proposed rule change with the Commission prior to listing U.S. dollar-settled options on any currencies other than the British pound and the Euro.

[7] Existing Phlx rules applicable to FCOs that are not proposed to be amended in this proposed rule change would remain in effect and would apply to both physical delivery FCOs and U.S. dollar-settled FCOs, unless the rule specifically provides otherwise.

[8] Unlike U.S. dollar-settled FCOs, a physical delivery option on a foreign currency gives its owner the right to receive physical delivery (if it is a call) or to make physical delivery (if it is a put) of the underlying foreign currency when the option is exercised.

[9] The Exchange traded U.S. dollar-settled options on German marks beginning in September 1994. In its order approving German mark U.S. dollar-settled options, the Commission stated that, in the future, the listing of additional cash/spot (as they were then known) FCOs based on different foreign currencies would require separate 19b–4 filings with the Commission. *See* Securities Exchange Act Release No. 33732 (March 8, 1994), 59 FR 12023 (March 15, 1994). The Exchange commenced trading of U.S. dollar-settled options on the Japanese yen on February 24, 1997. *See* Securities Exchange Act Release No. 36505, International Series Release No. 889 (November 22, 1995), 60 FR 61277 (November 29, 1995). U.S. dollar-settled German mark options were delisted on January 19, 1999. U.S. dollar-settled Japanese yen options were delisted on August 23, 1999.

[10] The ''spot price'' with respect to an option contract on a FCO contract means the price for the sale of one foreign currency for another, quoted by various commercial banks in the interbank foreign exchange market for the sale of a single unit of such foreign currency for immediate delivery (which generally means delivery within two business days following the date on which the terms of such sale are agreed upon). *See* Phlx Rule 1000(b)(16).

[11] Phlx Rule 1044, Delivery and Payment, is proposed to be amended to provide that upon exercise of an in-the-money U.S. dollar-settled FCO structured as a call, the holder receives, from OCC, U.S. dollars representing the difference between the exercise strike price and the closing settlement value of the U.S. dollar-settled FCO contract multiplied by the number of units of currency covered by the contract. Similarly, for a U.S. dollar-settled FCO structured as a put, Phlx Rule 1044 provides that the holder receives U.S. dollars representing the excess of the exercise price over the closing settlement value of the U.S. dollar-settled FCO contract multiplied by the number of units of foreign currency covered by the contract.

[12] The Exchange's existing, physical delivery options on the Currencies would not be affected by this proposal and would continue to trade as they

Continued

amend a number of rules applicable to U.S. dollar-settled FCOs generally, including the U.S. dollar-settled FCOs on the Currencies, as well as any other U.S. dollar-settled FCOs that the Exchange may list in the future.

Contract Size. The contract sizes of the U.S. dollar-settled FCO contracts on the Currencies would be 10,000 British pounds and 10,000 Euros.[13]

Expirations. The Exchange proposes to amend Phlx Rule 1012(a) by limiting the applicability of paragraph (ii) to physical delivery FCOs, by renumbering paragraph (iii) as paragraph (iv), and by adding new paragraph (iii) to provide that U.S. dollar-settled FCO contracts may be listed with expirations that are the same as the expirations permitted for equity index options pursuant to Phlx Rule 1101A with the exception of long term option series and quarterly expiring FCOs which the Exchange does not propose to list. The Exchange does not anticipate listing FLEX U.S. dollar-settled foreign currency options at this time.[14]

The Exchange anticipates that, at least initially, it would list expirations at one, two, three, six, and nine months, and that the options would be on three of the months from the March, June, September, December cycle, plus two additional near term months (five months at all times).[15] The expiration date for the consecutive and cycle month options would be 11:59 p.m. Eastern Time on the Saturday immediately following the third Friday of the expiration month pursuant to Phlx Rule 1000(b)(21), ''Expiration date,'' as proposed to be amended.

Trading Symbols. The Exchange expects that the symbols for options on the British Pound and on the Euro would be as follows:

British Pound Trading Symbol—XDB
British Pound Wrap Symbol—BJF
British Pound Settlement Value Symbol—BIJ
British Pound Strike Symbol—BJR
British Pound Wrap Strike Symbol—BVA
Euro Trading Symbol—XDE
Euro Wrap Symbol—EAE
Euro Settlement Value Symbol—EDY
Euro Strike Symbol—EPA
Euro Wrap Strike Symbol—EAY

Trading Hours. Phlx Rule 101, Hours of Business, would be amended to provide that U.S. dollar-settled FCOs would trade from 9:30 a.m. to 4 p.m. Eastern Time, Monday through Friday. These trading hours differ from the trading hours for the physical delivery FCO contracts because the U.S. dollar-settled FCOs would, unlike the Exchange's physical delivery FCOs, trade on Phlx XL in much the same way that stock index options currently trade.[16] The expiring U.S. dollar-settled FCO contract would cease trading at 4 p.m. on the day prior to its expiration day.[17] Unlike trading in physical delivery FCOs, trading in U.S. dollar-settled FCOs would not close on bank holidays. If Friday is an Exchange holiday, the settlement value for U.S. dollar-settled FCOs would be determined on the basis of the Noon Buying Rate [18] on the preceding trading day, which would also be the last day of trading for the expiring option.

Settlement Values. The Exchange proposes to change the method of determining the closing settlement value for U.S. dollar-settled FCOs. Phlx Rule 1057 would be revised to provide that the closing settlement value would be the day's announced Noon Buying Rate as determined by the Federal Reserve Bank of New York on the trading day prior to the expiration date. If the Noon Buying Rate is not announced by 2 p.m. Eastern Time, the closing settlement value would be the most recently announced Noon Buying Rate, unless the Exchange determines to apply an alternative closing settlement value as a result of extraordinary circumstances.[19] The closing settlement value would not be disseminated through the Options Price Reporting Authority (''OPRA''), but would be posted on the Exchange's Web site, where it would be publicly available to all visitors to the Exchange's Web site on an equal basis, without the need to enter any kind of password to access the settlement value. The Exchange would not disclose the settlement value to any person or group of persons other than employees of the Exchange who need to know prior to posting the value on the Exchange's Web site.

Position and Exercise Limits. For purposes of position and exercise limits, positions in U.S. dollar-settled FCO contracts would be aggregated with positions in the physical delivery contracts. The position limits and exercise limits for the U.S. dollar-settled FCOs would be the same as the position and exercise limits for the physical delivery contracts pursuant to Phlx Rules 1001 and 1002. However, Phlx Rule 1001, Position Limits, would be amended to provide that each Euro U.S. dollar-settled option contract would count as one-sixth of a contract for purposes of position and exercise limits.[20] Similarly, each British pound U.S. dollar-settled option contract would count as one-third of a contract for purposes of position and exercise limits.[21] The other aggregation principles in Phlx Rule 1001 would continue to apply.

Strike Prices. The Exchange proposes to initially list exercise strike prices for each expiration around the current spot price at half-cent ($.005) intervals up to five percent on each side.[22] Thus, if the spot price initially were at 1.0000, the Exchange would list strikes in $.005 intervals up to 1.0500 and down to .9500 for a total of twenty-one strike prices available for trading. The Exchange would not list any strike prices at intervals other than these $.005 intervals.[23] New strikes may be added

do today, by open outcry. The Exchange notes, however, that positions in the U.S. dollar-settled FCOs would be aggregated with positions in the physical delivery contracts for purposes of position and exercise limits, as discussed further below.

[13] The contract sizes for the physical delivery options on the Currencies are 31,250 British pounds and 62,500 Euros.

[14] Currently, trades may be executed in certain FLEX options on equities and equity indexes. *See* Phlx Rule 1079.

[15] By way of example, in September, the U.S. dollar-settled FCOs would have the following months listed: October, November, December, March, and June.

[16] Trading hours for the Exchange's physical delivery FCO contracts are from 2:30 a.m. to 2:30 p.m. Eastern Time, Monday through Friday.

[17] The Exchange notes that in order to facilitate trading of the U.S. dollar-settled FCOs on Phlx XL, trading would be permitted to occur after the settlement value is announced on the day prior to expiration, as discussed below.

[18] The Exchange notes that the Commission has recently approved listing standards for securities issued by a trust that represent investors' discrete identifiable and undivided beneficial ownership interests in non-U.S. currency deposited into the trust. The trust utilizes the Noon Buying Rate for the calculation of the Net Asset Value of the trust. *See* Securities Exchange Act Release No. 52843 (November 28, 2005), 70 FR 72486 (December 5, 2005) (order granting accelerated approval of SR–NYSE–2005–65).

[19] *Id.*

[20] According to the Exchange, each U.S. dollar-settled Euro option contract would be treated as one-sixth of a contract for position and exercise limit purposes because the cash-settled Euro option contract is roughly one-sixth of the size of the physical delivery contract.

[21] The cash-settled British pound option contract is roughly one-third of the size of the physical delivery contract.

[22] To determine foreign currency spot prices, the Exchange receives contributor bank quotes from a vendor in real-time and takes the average of the various quotes.

[23] To facilitate trading on Phlx XL, strike prices would be expressed without reference to the first two decimal places. Minimum quoting increments and maximum quote spreads would also reflect this convention (see below for a fuller discussion of minimum increments and maximum quote spreads). For example, assuming that the actual spot value of the Euro is $1.00, a strike could be listed at $1.0050 and would be expressed as $100.50. Similarly, the minimum quoting increment would be $.0005, expressed as $.05. Bids could be made $1.0045, expressed as $100.45, $1.0040, expressed as $100.40, and so forth. Offers could be made at $1.0055, expressed as $100.55, at $1.0060, expressed as $100.60, and so forth. Maximum quote

during the life of the option in accordance with Phlx Rule 1012(a)(iii).[24] New Commentary Section .06 would be added to Phlx Rule 1012 to specify that strike prices on the Euro and British pound cash-settled option would be listed at half-cent intervals. Text regarding the setting of exercise prices is being moved from paragraph (ii) to new Commentary Section .07 because it would be applicable not only to physical delivery FCOs but to U.S. dollar-settled FCOs as well. Options Floor Procedure Advice F–18, Expiration Month and Strike Prices—Selective Quoting Facility, is proposed to be amended to limit its applicability (including applicability of the Selective Quoting Facility) to physical delivery FCOs.[25]

Bids and Offers—Premium. Under Phlx Rule 1033, Bids and Offers—Premium, bids and offers in U.S. dollar-settled FCOs on the Currencies must be made in terms of U.S. dollars per unit of the underlying foreign currency. However, the first two decimal places would be omitted from all bid and offer quotations for the British pound and for the Euro. Therefore, for example, a bid of .50 for an option contract on the Euro would represent a bid to pay .005 per Euro—*i.e.*, a bid of $50.00—for an option contract having a unit of trading of 10,000 Euros. Phlx Rule 1034(a) would be revised to provide that the minimum increment for U.S. dollar-settled FCOs quoting under $3.00 would be $.0005 per unit of the foreign currency, expressed as .05 per unit of the foreign currency, which equals a $5.00 minimum increment per contract consisting of 10,000 Euros or 10,000 British pounds.[26] The minimum increment for U.S. dollar-settled FCOs quoting at $3.00 or higher would be $.0010 per unit of the foreign currency, expressed as .10 per unit of the foreign currency, which equals a $10.00 minimum increment per contract consisting of 10,000 Euros or 10,000 British pounds.[27]

Margin. The U.S. dollar-settled FCOs would have the same customer margin requirements as are provided for the existing FCOs pursuant to Phlx Rule 722, Margin Accounts, Commentary .16.[28] The Exchange calculates the margin requirements for each foreign currency underlying U.S. dollar-settled FCO separately, rather than determining one margin level for all foreign currencies based upon the historical pricing information for all foreign currencies together. The Exchange informs members and the public of the margin levels for each currency option immediately following the quarterly reviews described in Commentary .16 to Phlx Rule 722.

ii. Phlx XL Trading Rules for U.S. Dollar-Settled FCOs

As noted above, the Exchange is proposing that U.S. dollar-settled FCOs trade on Phlx XL, the Exchange's electronic trading platform for options. Currently, all Phlx equity and equity index options also trade on Phlx XL. According to the Exchange, Phlx XL enables market makers to electronically deliver streaming quotes on or off the floor, producing tighter and deeper markets. Additionally, the Exchange believes that trading U.S. dollar-settled FCOs on Phlx XL would enable the Exchange to improve electronic access for customers, broker dealers and market makers while leveraging the advantages of a floor-based environment. Options order-flow providing firms would be able to direct their U.S. dollar-settled FCO orders to the Exchange liquidity provider of their choice under the Exchange's directed order flow program. Exchange specialists, on-floor market makers known as Streaming Quote Traders (''SQTs''),[29] and remote market makers known as Remote Streaming Quote Traders (''RSQTs'')[30] who stream their

spread parameters would be $.0025, expressed as $.25. Thus, a market maker could bid $1.0030, expressed as $100.30, and offer at $1.0055, expressed as $100.55. Prior to commencement of trading of U.S. dollar-settled options on the Currencies as proposed herein, the Exchange intends to issue an informational memorandum to members and member organizations which explains this strike price and quoting convention.

[24] Phlx Rule 1012(a)(iv) provides in part that ''[a]dditional series of options of the same class may be opened for trading on the Exchange as the market price of the underlying stock or Exchange-Traded Fund Share or the underlying foreign currency, as the case may be, moves substantially from the initial exercise price or prices.'' As the spot price for U.S. dollar settled FCO moves, the Exchange would list new strike prices that, at the time of listing, do not exceed the spot price by more than 5% and are not less than the spot price by 5%. For example, if at the time of initial listing the spot price of the Euro is at 1.0000, the strike prices the Exchange would list would be .9500 to 1.0500. If the spot price then moves to 1.0500, the Exchange may list additional strikes at the following prices: 1.0550 to 1.1000. In that event, the Exchange would delist any previously-listed series outside of the current ten percent band that have no open interest.

[25] The selective quoting facility establishes criteria to determine whether the bid/ask quotation for each FCO series is eligible for transmission to OPRA for off-floor dissemination to securities data vendors. When the Exchange designates a particular foreign currency option series as a ''non-update strike,'' its quotes are not made available for continuous dissemination to the public throughout the trading day. *See* Phlx Rule 1012, Commentary .04. The selective quoting facility, implemented in 1994, was intended to reduce the number of strike prices continuously being updated and disseminated, thus resulting in more timely and accurate foreign currency options quote displays. As noted above, however, the selective quoting facility would be limited to physical delivery FCOs and would not apply to U.S. dollar-settled FCOs.

[26] By way of example, if the spot price of the Euro is at $1.0255 and an investor purchases the December Euro $1.2500 (expressed as $125.00) Call at a premium of $.0075 (expressed as $.75) and then sells the December Euro $1.2500 Call at a premium of $.0095 (expressed as $.95), the investor's profit would be $.0020 per Euro. The investor's profit would be $.0020 multiplied by 10,000 Euros (the size of the contract) for a total of $20.00.

[27] The Exchange has determined to set the minimum quoting increment at $.0005 (expressed as $.05) per Euro for the U.S. dollar-settled FCOs rather than at the $.0001 (expressed as $.01) per Euro minimum quoting increment that currently applies to the Exchange's physical delivery FCOs because the Phlx XL trading system would not accommodate quoting in increments of $.0001 (expressed as $.01, or otherwise). So, for example, while a bid of $.0075 per Euro in the physical delivery FCO can be improved by quoting at $.0076, a bid of $.0075 per Euro in the U.S. dollar-settled FCO can only be improved by quoting no less than $.0080. The minimum increment per contract in the physical delivery Euro option, if it were the same size as the U.S. dollar-settled Euro option, would thus be $1.00 ($.0001 multiplied by the contract size of 10,000 Euros), while the minimum increment per contract in the U.S. dollar-settled contract would be $5.00 ($.0005 multiplied by the contract size of 10,000 Euros).

[28] Pursuant to Phlx Rule 722, Commentary .16, the Exchange calculates the margin requirement for customers that assume short FCO positions by adding a percentage of the current market value of the underlying foreign currency contract to the option premium price less an adjustment for the out-of-the-money amount of the option contract. On a quarterly calendar basis, the Exchange reviews five-day price changes over the preceding three-year period for each underlying currency and sets the add-on percentage at a level which would have covered those price changes at least 97.5% of the time (the ''confidence level''). If the results of subsequent reviews show that the current margin level provides a confidence level below 97%, the Exchange increases the margin requirement for that individual currency up to a 98% confidence level. If the confidence level is between 97% and 97.5%, the margin level would remain the same but would be subject to monthly follow-up reviews until the confidence level exceeds 97.5% for two consecutive months. If during the course of the monthly follow-up reviews, the confidence level drops below 97%, the margin level is increased to a 98% level and if it exceeds 97.5% for two consecutive months, the currency is taken off monthly reviews and is put back on the quarterly review cycle. If the currency exceeds 98.5%, the margin level is reduced to a 98% confidence level during the most recent three year period. Finally, in order to account for large price movements outside the established margin level, if the quarterly review shows that the currency had a price movement, either positive or negative, greater than two times the margin level during the most recent three year period, the margin requirement is set at a level to meet a 99% confidence level (''Extreme Outlier Test'').

[29] An SQT is an ROT who has received permission from the Exchange to generate and submit option quotations electronically through AUTOM in eligible options to which such SQT is assigned. An SQT may only submit such quotations while such SQT is physically present on the floor of the Exchange. *See* Exchange Rule 1014(b)(ii)(A).

[30] An RSQT is an ROT that is a member or member organization with no physical trading floor presence who has received permission from the Exchange to generate and submit option quotations electronically through AUTOM in eligible options

Continued

U.S. dollar-settled FCO quotes to the Exchange would be eligible to participate in the directed order flow program. Specialists in U.S. dollar-settled FCOs, like specialists in equity and equity index options, would also be eligible to participate in the Exchange's enhanced specialist participation programs which provide a type of exception to the Exchange's parity rules, allocating to the specialist a greater than equal share of the portion of an order that is divided among the specialist and any ''controlled accounts'' (*i.e.*, any account controlled by or under common control with a broker-dealer, such as a specialist or an SQT) that are on parity.[31] By contrast, priority and parity rules for options on physical delivery foreign currency options are set forth in Phlx Rule 1014(h), which generally is a price-time priority rule without regard to account types. Once a bid or offer in physical delivery FCOs establishes priority, no bid-offer may gain parity at that price during that trading session until at least ten percent of the size of the previous bid-offer or 100 contracts, whichever is greater, trades.

The Exchange proposes to amend a number of rules that currently govern the trading of equity and equity index options that trade as ''Streaming Quote Options'' on Phlx XL to extend the coverage of those rules to U.S. dollar-settled FCOs as well.[32] In general, the Exchange proposes to make the necessary rule changes to permit U.S. dollar-settled FCOs to trade much in the same manner as equity index options, which are also U.S. dollar-settled products.[33]

Phlx Rule 1080, Philadelphia Stock Exchange Automated Options Market (AUTOM) and Automatic Execution System (AUTO–X), would be amended to include U.S. dollar-settled FCOs as a product that may be traded on Phlx XL as a Streaming Quote Option. In contrast, physical delivery FCOs have always traded on the Exchange by open outcry only, without automated order delivery or execution (as have 3D FCOs in the past). Instead, floor brokers accept and execute orders. In addition, the limit order book is manually maintained by the specialist, rather than electronically like on Phlx XL. Though physical delivery FCOs would continue to trade by open outcry, U.S. dollar-settled FCOs would now trade on Phlx XL. Like equity options and equity index options, U.S. dollar-settled FCOs would trade on Phlx XL beginning at 9:30 a.m. through the end of the trading day at 4 p.m. The text of Phlx Rule 1080 would be amended to provide that U.S. dollar-settled FCOs would generally trade in the same manner as an equity option or an index option.[34] The proposed amendments reflect that the Foreign Currency Options Committee would have decision-making authority in certain instances with respect to these new products (rather than the Options Committee, which oversees the trading of equity and equity index options on Phlx XL). Conforming changes are proposed to Options Floor Procedure Advice A–13, Auto-Execution Engagement/Disengagement Responsibility.

Phlx Rule 1014, Obligations and Restrictions Applicable to Specialists and Registered Options Traders, would be amended to make clear that the obligations and restrictions applicable to specialists and registered options traders (''ROTs'') trading equity index options now would generally apply to specialists and ROTs in U.S. dollar-settled FCOs.[35] Currently, some of those same obligations, such as, for example, bid/ask differentials and affirmative market making obligations and restrictions, apply to the trading of physical delivery FCOs. Though specialists and ROTs in physical delivery FCOs would remain subject to these obligations and restrictions, specialists and ROTs in U.S. dollar-settled FCOs would now be subject to obligations and restrictions similar to those that apply to equity and equity index option specialists and ROTs. For example, while Phlx Rule 1014(c)(ii) prescribes bid/ask differentials for specialists and ROTs in physical delivery FCOs, Phlx Rule 1014(c)(i), as revised, would prescribe the bid/ask differentials for both equity options (in subsection (a)) and U.S. dollar-settled FCOs (in subsection (b)). The bid/ask differentials for equity options and the bid/ask differentials for U.S. dollar-settled FCOs, as expressed, would be the same.[36] The bid/ask differential rules for U.S. dollar-settled FCOs would be amended to resemble those applicable to equity options in order to facilitate trading on the Phlx XL system by the system's current users who are accustomed to the existing bid/ask differentials applicable to equity options.

Like Phlx Rule 1080, Phlx Rule 1014 would be amended to reflect that the Foreign Currency Options Committee would have decision-making authority in certain instances with respect to these new products. Proposed amendments to Phlx Rule 1014 also would limit existing provisions of Phlx Rule 1014 currently applicable to FCO contracts to physical delivery FCOs. Conforming changes are proposed to Options Floor Procedure Advices B–6, Priority of Options Orders for Equity Options and Index Options by Account Type, B–7, Time Priority of Bids/Offers in Foreign Currency Options, and F–6, Option Quote Parameters.

Phlx Rule 1016, Block Transactions in Foreign Currency Options, would be revised to limit block trades to physical delivery FCOs. The block trading rule currently enables market participants to execute large-size FCO orders in an orderly fashion at a price that may not be the best bid or offer for that particular FCO, but is the best price available for executing a block trade in such FCO.

---

to which such RSQT has been assigned. An RSQT may only submit such quotations electronically from off the floor of the Exchange. *See* Exchange Rule 1014(b)(ii)(B).

[31] The Exchange currently has several Enhanced Specialist Participation programs, embodied in Phlx Rule 1014(g). These programs establish specified percentages as the Enhanced Specialist Participation, depending on the category of option. Currently, the specialist in physical delivery FCOs is not entitled to a ''specialist enhancement,'' although such a program was once in effect.

[32] Phlx Rule 1080(k) provides that the Options Committee may, on an issue-by-issue basis, determine the specific issues in which SQTs may generate and submit option quotations if such SQT is physically present on the Exchange floor, and RSQTs may generate and submit option quotations from off the floor of the Exchange, electronically. Such issues shall be known as ''Streaming Quote Options.'' As noted above, however, the Exchange's current physical delivery FCOs would continue to trade as they do today. They would not be migrated to Phlx XL, and the trading rules which the Exchange is proposing to amend today to govern trading of U.S. dollar-settled FCOs on Phlx XL would not apply to physical delivery FCOs.

[33] In the event of system wide trading halts in equity and equity index options required by Exchange Rule 133 (the ''circuit breaker'' rule), Trading Halts Due to Extraordinary Market Volatility, trading in U.S. dollar-settled FCO also would be halted.

[34] The Exchange's Equity Options AutoQuote System is an options price quote calculator and quote generator used by specialists in equity options. It incorporates pricing model data, which generate automatic pricing of option series based on a number of factors, including the value of the underlying stock. The Exchange would not provide an autoquote system for specialists in U.S. dollar-traded FCOs trading on Phlx XL. Rule 1080, Commentary .01, would be revised to reflect that the Auto-Quote system applies to equity and equity index options, but not to U.S. dollar-settled FCOs. Options Floor Procedure Advice F–17, FCO Trades to be Effected in the Pit, is proposed to be amended so that it applies only to physical delivery FCOs.

[35] However, Phlx Rule 1014(c)(i)(B), which provides for a maximum option price change with exceptions based upon the price of the underlying security, would not apply to U.S. dollar-settled FCOs. The Exchange does not have a maximum option price change rule that applies to physical delivery FCOs and is not proposing a maximum option price change rule for U.S. dollar-settled FCOs.

[36] *See* Phlx Rule 1034, Minimum Increments, which would be amended to require the first two decimal places to be disregarded in expressing quotes for U.S. dollar-settled options on the Euro and the British pound.

The procedure permits this limited exception to the existing priority and precedence rules of the Exchange while continuing to protect smaller customer orders and orders that constitute the ''best market'' or best bid or offer. However, in order to take advantage of the block execution procedure, Phlx Rule 1016 requires a floor broker with a block order to quote the market in a particular FCO, announce that a block quotation for a specified number of contracts over 1,000 is sought, and ascertain from the trading crowd the best price at which the entire order can be executed. Trading of U.S. dollar-settled FCOs on Phlx XL by SQTs and RSQTs which stream quotes into the system makes execution of block trades pursuant to the procedures required by Phlx Rule 1016 impractical for that product.[37] Phlx Rule 1017, Openings in Options, governs the Exchange's fully automated opening system for options traded on Phlx XL as part of the Phlx XL system.[38] Phlx Rule 1017 is proposed to be amended to reflect that U.S. dollar-settled FCOs would be opened using the automated opening system, subject to certain adjustments to current processes because FCO openings, unlike openings of equity and index options, would not depend upon the opening of trading in an underlying cash market.[39] Currently, openings in FCOs have been conducted pursuant to Phlx Rule 1047, Commentary .01, utilizing one of the types of trading rotations listed there. Specifically, in addition to consulting his pricing and quotation tools, the specialist manually checks the limit order book and with floor brokers, and then opens each FCO for trading and sends out opening quotes in each series, which may include executing opening trades. Though physical delivery FCO will continue to open in this fashion, U.S. dollar-settled FCO would now open largely in the same way as equity and equity index options. Phlx Rule 1017 would provide that Phlx XL would accept orders and quotes in U.S. dollar-settled FCOs beginning no later than one hour before market opening, and that the specialist assigned in the particular U.S. dollar-settled FCO must enter opening quotes not later than 30 seconds after market opening.[40] It would provide that in certain circumstances an anticipated opening price would be calculated if the quotes of at least two Phlx XL participants have been submitted within two minutes of market opening (or such shorter time as determined by the FCO Committee and disseminated to membership via Exchange circular), as opposed to within two minutes of the opening trade or quote on the primary market for the underlying security, as is the case for equity options. Finally, it would provide that the system would not open a series of U.S. dollar-settled FCO if the opening price is not within an acceptable range (as determined by the FCO Committee and announced to Exchange members and member organizations by way of Exchange circular). In addition, Phlx Rule 1017 would be amended to clarify its application to index options by inserting reference to ''underlying securities constituting 100% of the index value.'' The rule currently refers to the opening of the ''underlying security,'' which makes sense with respect to equity options, but not index options. Conforming changes are proposed to Options Floor Procedure Advices A–12, Opening Rotations, and A–14, Equity Option and Index Option Opening Parameters. Phlx Rule 1063, Responsibilities of Floor Brokers, is being amended to provide that the Floor Broker Management System currently employed with respect to equity and equity index options would also be required to be used for U.S. dollar-settled FCO.[41] As amended, the rule would limit the ''electronic audit trail'' procedures currently applicable to FCOs to physical delivery FCOs only. Conforming changes are proposed to Options Floor Procedure Advice C–2, Options Floor Broker Management System.

Phlx Rule 1069, Customized Foreign Currency Options, is proposed to be revised to limit applicability of the rule to physical delivery FCO. U.S. dollar settled FCOs would not be eligible to trade on a customized basis.

Futures on the British pound and the Euro, as well as options on such futures are traded on the CME (both exchange pit trading and GLOBEX trading). Euro Currency Trust Shares and British Pound Sterling Shares trade on NYSE and on NYSE Arca. The Exchange represented that, to the best of the Exchange's knowledge, these U.S. markets are the primary trading markets in the world for exchange-traded futures, options on futures and trust shares on these currencies. The Phlx represented that it is able to obtain information regarding trading in the Euro Currency Trust Shares, British Pound Sterling Shares, Euro and British Pound options, and Euro and British Pound futures and options on futures through Phlx members, in connection with such members' proprietary or customer trades which they effect on any relevant market.[42] The Phlx represented that it may obtain trading information via the Intermarket Surveillance Group (''ISG'') from other exchanges who are members or affiliates of the ISG. Specifically, the Phlx can obtain such information from the NYSE and NYSE Arca in connection with shares of the Euro Currency Trust and the CurrencyShares™ British Pound Sterling Trust trading on the NYSE and NYSE Arca, and from the CME and LIFFE in connection with Euro and Pound futures trading on those exchanges.[43] Additionally, pursuant to Phlx Rule 1022, Securities Accounts and Orders of Specialists and Registered Options Traders, specialists and ROTs are required to identify all accounts maintained for foreign currency trading in which the specialist or ROT engages in trading activity or over which he exercises investment discretion, and no

[37] However, Phlx Rule 1033(a)(ii), which would apply to U.S. dollar-settled FCOs, provides in relevant part that ''[i]n response to a floor broker's solicitation of a single bid or offer, the members of a trading crowd (including the specialist and ROTs) may discuss, negotiate and agree upon the price or prices at which an order of a size greater than the AUTO–X guarantee can be executed at that time, or the number of contracts that could be executed at a given price or prices * * *.''

[38] For a description of the automated opening system, *see* Securities Exchange Act Release Nos. 52667 (October 25, 2005), 70 FR 65953 (November 1, 2005) (SR–Phlx–2005–25), and 53242 (February 7, 2006), 71 FR 7604 (February 13, 2006) (SR–Phlx–2006–11).

[39] Currently, with respect to automated openings in an Industry or Market Index conducted pursuant to Phlx Rule 1017, the specialist may engage the automated opening system to open such options when underlying securities representing 50% of the current index value of all the securities underlying the index have opened for trading on the primary market. The system automatically opens all index options when underlying securities representing 100% of the current index value of all the securities underlying the index have opened for trading on the primary market. Because the spot foreign currency market, on the other hand, has no opening on a primary market, the rules for automated opening of U.S. dollar-settled FCOs would differ from those governing equity index option openings.

[40] Market opening, as with equity and equity index options, is normally at 9:30 a.m. Eastern Time.

[41] The Options Floor Broker Management System is a component of AUTOM designed to enable Floor Brokers and/or their employees to enter, route and report transactions stemming from options orders received on the Exchange. The Options Floor Broker Management System also is designed to establish an electronic audit trail for options orders represented and executed by Floor Brokers on the Exchange, such that the audit trial provides an accurate, time-sequenced record of electronic and other orders, quotations and transactions on the Exchange, beginning with the receipt of an order by the Exchange, and further documenting the life of the order through the process of execution, partial execution, or cancellation of that order. *See* Phlx Rule 1080, Commentary .06.

[42] *See* Equity Floor Procedure Advice F–8 and Options Floor Procedure F–8, Failure to Comply with an Exchange Inquiry.

[43] NYSE and NYSE Arca are members of ISG. CME and LIFFE are affiliate members of ISG.

specialist or ROT may engage in foreign currency trading in any account not reported pursuant to the rule. Further, Phlx Rule 1022 provides that every specialist and ROT must make available to the Phlx upon request all books, records and other information relating to transactions for their own account or accounts of associated persons with respect to the foreign currency underlying U.S. dollar-settled FCOs, including transactions in the cash market as well as the futures, options and options on futures markets. Phlx Rule 1022(d) is proposed to be amended to add transactions in ''other foreign currency derivatives'' to the list of currency related transactions with respect to which specialists and ROTs must provide information to the Exchange.

Exchange rules designed to protect public customers trading in FCOs would apply. Specifically, under paragraph (b) of Phlx Rule 1024, ''Conduct of Accounts Open for Trading,'' members are prohibited from accepting a customer order to purchase or write a U.S. dollar-settled FCO unless such customer's account has been specially approved in writing by a designated Foreign Currency Options Principal of the member for transactions in FCOs. Additionally, Phlx Rule 1026, ''Suitability,'' is designed to ensure that options, including U.S. dollar-settled FCO, are sold only to customers capable of evaluating and bearing the risks associated with trading in the instruments. Finally, under Phlx Rule 1027, ''Discretionary Accounts,'' members are permitted to exercise discretionary power with respect to trading U.S. dollar-settled FCOs in a customer's account only if the member has received prior written authorization from the customer and the account has been accepted in writing by a designated Foreign Currency Options Principal. In addition, under Phlx Rule 1027, the Foreign Currency Options Principal or a Registered Options Principal must approve and initial each discretionary U.S. dollar-settled FCO on the day the order is entered.[44] Phlx Rules 1025, Supervision of Accounts, 1026, Suitability, 1028, Confirmations, and 1029, Delivery of Options Disclosure Documents, also would apply to trading in U.S. dollar-settled FCO.

Finally, the Exchange represents that it has adequate systems capacity to process quotations and trades in the proposed U.S. dollar-settled FCO.

[44] *See supra* note 8.

iii. Deletion of Outdated References to the German Mark, the French Franc, the Spanish Peseta and the Italian Lira

Finally, as a housekeeping matter, the Exchange proposes to delete outdated references to the German mark, the Italian lira, the Spanish peseta and the French franc from a number of Exchange rules regarding FCOs that were once listed on those currencies.[45] In that regard, the Exchange is proposing to amend Phlx Rule 722, Margin Accounts; Phlx Rule 1000, Applicability, Definitions and References; Phlx Rule 1001, Position Limits; Phlx Rule 1009, Criteria for Underlying Securities; Phlx Rule 1014, Obligations and Restrictions Applicable to Specialists and Registered Options Traders; Phlx Rule 1033, Bids And Offers—Premium; Phlx Rule 1034, Minimum Increments; Phlx Rule 1069, Customized Foreign Currency Options; Phlx Rule 1079, FLEX Index and Equity Options; and Options Floor Procedure Advice B–7, Time Priority of Bids/Offers in Foreign Currency Options.

2. Statutory Basis

The Exchange believes that its proposal is consistent with Section 6(b) of the Act[46] in general, and furthers the objectives of Section 6(b)(5) of the Act[47] in particular, in that it is designed to promote just and equitable principles of trade; to foster cooperation and coordination with persons engaged in regulating, clearing, settling, processing information with respect to, and facilitating transactions in securities; to remove impediments to and perfect the mechanism of a free and open market and a national market system; and, in general, to protect investors and the public interest by providing FCO users who do not necessarily need to exchange currency at settlement with an alternative U.S. dollar-settled FCO in an electronic trading venue.

[45] On January 1, 1999, the European Union introduced the Euro which replaced the national currencies of a number of countries including Germany, Italy, Spain and France that qualified for inclusion in European Monetary Union. On January 1, 1999, these countries began to use the Euro along with their existing currencies (''legacy currencies''). At that point, the legacy currencies became units of the Euro and continued to constitute legal tender in their respective countries of origin until 2002. In 2002, the legacy currencies ceased to be units of the Euro, and the Euro became the sole medium of exchange of the participating member states. The Phlx began trading the Euro FCO in January 1999. *See* Securities Exchange Act Release No. 40953 (January 15, 1999), 64 FR 3734 (January 25, 1999) (SR–Phlx–99–01).

[46] 15 U.S.C. 78f(b).

[47] 15 U.S.C. 78f(b)(5).

B. Self-Regulatory Organization's Statement on Burden on Competition

The Exchange believes that the proposed rule change will impose no burden on competition that is not necessary or appropriate in furtherance of the purposes of the Act.

C. Self-Regulatory Organization's Statement on Comments on the Proposed Rule Change Received from Members, Participants or Others

The Exchange has neither solicited nor received comments on this proposal.

III. Date of Effectiveness of the Proposed Rule Change and Timing for Commission Action

Within 35 days of the date of publication of this notice in the **Federal Register** or within such longer period (i) As the Commission may designate up to 90 days of such date if it finds such longer period to be appropriate and publishes its reasons for so finding or (ii) as to which the Exchange consents, the Commission will:

(A) By order approve such proposed rule change, or

(B) institute proceedings to determine whether the proposed rule change should be disapproved.

IV. Solicitation of Comments

Interested persons are invited to submit written data, views, and arguments concerning the foregoing, including whether the proposed rule change is consistent with the Act. Comments may be submitted by any of the following methods:

Electronic Comments

- Use the Commission's Internet comment form (*http://www.sec.gov/rules/sro.shtml*); or
- Send an e-mail to *rule-comments@sec.gov*. Please include File Number SR–Phlx–2006–34 on the subject line.

Paper Comments

- Send paper comments in triplicate to Nancy M. Morris, Secretary, Securities and Exchange Commission, Station Place, 100 F Street, NE., Washington, DC 20549–1090.

All submissions should refer to File Number SR–Phlx–2006–34. This file number should be included on the subject line if e-mail is used. To help the Commission process and review your comments more efficiently, please use only one method. The Commission will post all comments on the Commission's Internet Web site (*http://www.sec.gov/rules/sro.shtml*). Copies of the submission, all subsequent

amendments, all written statements with respect to the proposed rule change that are filed with the Commission, and all written communications relating to the proposed rule change between the Commission and any person, other than those that may be withheld from the public in accordance with the provisions of 5 U.S.C. 552, will be available for inspection and copying in the Commission's Public Reference Room. Copies of such filing also will be available for inspection and copying at the principal office of Phlx. All comments received will be posted without change; the Commission does not edit personal identifying information from submissions. You should submit only information that you wish to make available publicly. All submissions should refer to File Number SR–Phlx–2006–34 and should be submitted on or before November 24, 2006.

For the Commission, by the Division of Market Regulation, pursuant to delegated authority.[48]

Nancy M. Morris,

Secretary.

[FR Doc. E6–18451 Filed 11–1–06; 8:45 am]

BILLING CODE 8011–01–P

[48] 17 CFR 200.30–3(a)(12).

SECURITIES AND EXCHANGE COMMISSION

[Release No. 34–54659; File No. SR–Phlx–2006–67]

Self-Regulatory Organizations; Philadelphia Stock Exchange, Inc.; Notice of Filing and Immediate Effectiveness of Proposed Rule Change To Cap Registered Options Trader and Specialist Equity Option Comparison and Transaction Charges When Certain Requirements Are Met

October 27, 2006.

Pursuant to Section 19(b)(1) of the Securities Exchange Act of 1934 (''Act'')[1] and Rule 19b–4 thereunder,[2] notice is hereby given that on October 19, 2006, the Philadelphia Stock Exchange, Inc. (''Phlx'' or ''Exchange'') filed with the Securities and Exchange Commission (''Commission'') the proposed rule change as described in Items I, II, and III below, which Items have been prepared by the Exchange. The Phlx has designated this proposal as one establishing or changing a due, fee, or other charge imposed by a self-regulatory organization pursuant to Section 19(b)(3)(A) of the Act,[3] and Rule 19b–4(f)(2) thereunder,[4] which renders the proposal effective upon filing with the Commission. The Commission is publishing this notice to solicit comments on the proposed rule change from interested persons.

[1] 15 U.S.C. 78s(b)(1).

[2] 17 CFR 240.19b–4.

[3] 15 U.S.C. 78s(b)(3)(A).

[4] 17 CFR 240.19b–4(f)(2).

I. Self-Regulatory Organization's Statement of the Terms of Substance of the Proposed Rule Change

The Phlx proposes to adopt a cap on Registered Options Trader (''ROT'') comparison charges and ROT and specialist transaction charges[5] in connection with non-AUTOM delivered equity option contracts[6] when an ROT or specialist executes over 14,000 contracts calculated on a daily basis in all equity options overlying the same underlying security per day (''Qualifying Option''). This proposal will apply only to transactions when an ROT or specialist is the contra-party to a customer order. Therefore, after the 14,000 non-AUTOM delivered contract level is reached in a Qualifying Option, additional comparison and transaction charges will not be assessed on subsequent option contracts in excess of 14,000 that are executed on that day in that specific Qualifying Option when the ROT or specialist is the contra-party to a customer order.[7] In addition, even when the 14,000 cap is reached, the Exchange will continue to impose a license fee of $0.10 per contract side on applicable ROTs and specialists for equity option transactions on those licensed products that carry a license fee.[8] This proposal was designated to become effective for trades settling on or after October 20, 2006.

The text of the proposed rule change is available on the Phlx's Web site, *http://www.phlx.com*, at the Phlx's Office of the Secretary, and at the Commission's Public Reference Room.

[5] The Exchange does not currently assess a comparison charge on specialist transactions. Therefore, the proposed cap will apply to ROT comparison and transaction charges combined and separately to specialist transaction charges.

[6] For purposes of this fee, orders delivered via the Floor Broker Management System shall be deemed to be non-AUTOM delivered orders. *See* Phlx Rule 1063.

[7] For example, if an ROT executes a total of 35,000 non-AUTOM delivered customer SPY equity option contracts (puts and calls) in a given day, the transaction and comparison charges assessed for these transactions will be capped for that day at $3,080 (14,000 contracts * ($0.19 (transaction charge) + $0.03 (comparison charge)). In this example, additional transaction and comparison charges will continue to be assessed on all other option contracts executed by that ROT, except for those executed option contracts in other options that also meet the above requirements. For orders delivered electronically and transactions that are executed with a contra party other than a customer (*i.e.*, another ROT), comparison and transaction charges will continue to be assessed even when the contracts are in the same option (*i.e.*, SPY) that qualified for the cap described above.

[8] For a complete list of the licensed products that will be assessed a $0.10 license fee per contract side after the 14,000 equity option contract cap is reached, *see* $60,000 ''Firm Related'' Equity Option and Index Option Cap on the Exchange's fee schedule.

II. Self-Regulatory Organization's Statement of the Purpose of, and Statutory Basis for, the Proposed Rule Change

In its filing with the Commission, the Phlx included statements concerning the purpose of and basis for the proposed rule change and discussed any comments it received on the proposal. The text of these statements may be examined at the places specified in Item IV below. The Exchange has prepared summaries, set forth in sections A, B, and C below, of the most significant aspects of such statements.

A. Self-Regulatory Organization's Statement of the Purpose of, and the Statutory Basis for, the Proposed Rule Change

1. Purpose

The purpose of this proposal is to create an incentive for ROTs and specialists to attract additional order flow to the Exchange and also, in connection with sizeable customer transactions, to create an incentive for ROTs and specialists to execute additional contracts knowing comparison and transaction fees are capped once the 14,000 threshold is met. This proposal should also provide additional incentives for member organizations to increase liquidity and allow the Exchange to remain competitive.

2. Statutory Basis

The Exchange believes that the proposed rule change is consistent with Section 6(b) of the Act[9] in general, and furthers the objectives of Section 6(b)(4) of the Act[10] in particular, in that it is an equitable allocation of reasonable fees and other charges among Exchange members.

B. Self-Regulatory Organization's Statement on Burden on Competition

The Phlx believes that the proposed rule change would impose no burden on competition that is not necessary or appropriate in furtherance of the purposes of the Act.

[9] 15 U.S.C. 78f(b).

[10] 15 U.S.C. 78f(b)(4).

C. Self-Regulatory Organization's Statement on Comments on the Proposed Rule Change Received From Members, Participants or Others

The Exchange did not solicit or receive any written comments with respect to the proposal.

III. Date of Effectiveness of the Proposed Rule Change and Timing for Commission Action

The foregoing proposed rule change has been designated as a fee change pursuant to Section 19(b)(3)(A)(ii) of the Act [11] and Rule 19b–4(f)(2) [12] thereunder. Accordingly, the proposal is effective upon filing with the Commission. At any time within 60 days of the filing of the proposed rule change, the Commission may summarily abrogate such rule change if it appears to the Commission that such action is necessary or appropriate in the public interest, for the protection of investors, or otherwise in furtherance of the purposes of the Act.

IV. Solicitation of Comments

Interested persons are invited to submit written data, views, and arguments concerning the foregoing, including whether the proposed rule change is consistent with the Act. Comments may be submitted by any of the following methods:

Electronic Comments

- Use the Commission's Internet comment form (*http://www.sec.gov/rules/sro.shtml*); or
- Send an e-mail to *rule-comments@sec.gov.* Please include File Number SR–Phlx–2006–67 on the subject line.

Paper Comments

- Send paper comments in triplicate to Nancy M. Morris, Secretary, Securities and Exchange Commission, Station Place, 100 F Street, NE., Washington, DC 20549–1090.

All submissions should refer to File Number SR–Phlx–2006–67. This file number should be included on the subject line if e-mail is used. To help the Commission process and review your comments more efficiently, please use only one method. The Commission will post all comments on the Commission's Internet Web site (*http://www.sec.gov/rules/sro.shtml*). Copies of the submission, all subsequent amendments, all written statements with respect to the proposed rule change that are filed with the Commission, and all written communications relating to the proposed rule change between the Commission and any person, other than those that may be withheld from the public in accordance with the provisions of 5 U.S.C. 552, will be available for inspection and copying in the Commission's Public Reference Room. Copies of such filing also will be available for inspection and copying at the principal office of the Exchange. All comments received will be posted without change; the Commission does not edit personal identifying information from submissions. You should submit only information that you wish to make available publicly. All submissions should refer to File Number SR–Phlx–2006–67 and should be submitted on or before November 24, 2006.

For the Commission, by the Division of Market Regulation, pursuant to delegated authority.[13]

Jill M. Peterson,

Assistant Secretary.

[FR Doc. E6–18484 Filed 11–1–06; 8:45 am]

BILLING CODE 8011–01–P

[11] 15 U.S.C. 78s(b)(3)(A)(ii).

[12] 17 CFR 240.19b–4(f)(2).

[13] 17 CFR 200.30–3(a)(12).

TENNESSEE VALLEY AUTHORITY

No FEAR Act Notice

Summary: 5 CFR part 724.202 requires that each Federal agency provide notice to its employees, former employees, and applicants for employment about the rights and remedies available under the Antidiscrimination Laws and Whistleblower Protection Laws applicable to them within 60 calendar days after September 18, 2006. Each agency must publish the initial notice in the **Federal Register**.

No FEAR Act Notice

On May 15, 2002, Congress enacted the Notification and Federal Employee Antidiscrimination and Retaliation Act of 2002, which is now known as the No FEAR Act. One purpose of the Act is to require that Federal agencies be accountable for violations of antidiscrimination and whistleblower protection laws. Public Law 107–174, Summary. In support of this purpose, Congress found that ''agencies cannot be run effectively if those agencies practice or tolerate discrimination.'' Pub. L. 107–174, Title I, General Provisions, section 101(1).

The Act also requires this agency to provide this notice to Federal employees, former Federal employees and applicants for Federal employment to inform you of the rights and protections available to you under federal antidiscrimination and whistleblower protection laws.

Antidiscrimination Laws

A Federal agency cannot discriminate against an employee or applicant with respect to the terms, conditions or privileges of employment on the basis of race, color, religion, sex, national origin, age, or disability. Discrimination on these bases is prohibited by one or more of the following statutes: 5 U.S.C. 2302(b)(1), 29 U.S.C. 206(d), 29 U.S.C. 631, 29 U.S.C. 633a, 29 U.S.C. 791 and 42 U.S.C. 2000e-16.

If you believe that you have been the victim of unlawful discrimination on the basis of race, color, religion, sex, national origin or disability, you must contact an Equal Employment Opportunity (EEO) counselor within 45 calendar days of the alleged discriminatory action, or, in the case of a personnel action, within 45 calendar days of the effective date of the action, before you can file a formal complaint of discrimination with your agency. *See, e.g.* 29 CFR part 1614. If you believe that you have been the victim of unlawful discrimination on the basis of age, you must either contact an EEO counselor as noted above or give notice of intent to sue to the Equal Employment Opportunity Commission (EEOC) within 180 calendar days of the alleged discriminatory action.

Whistleblower Protection Laws

A Federal employee with authority to take, direct others to take, recommend or approve any personnel action must not use that authority to take or fail to take, or threaten to take or fail to take, a personnel action against an employee or applicant because of a disclosure of information by that individual that is reasonably believed to evidence violations of law, rule or regulation; gross mismanagement; gross waste of funds; an abuse of authority; or a substantial and specific danger to public health or safety, unless disclosure of such information is specifically prohibited by law and such information is specifically required by Executive order to be kept secret in the interest of national defense or the conduct of foreign affairs.

Retaliation against an employee or applicant for making a protected disclosure is prohibited by 5 U.S.C. 2302(b)(8). If you believe that you have been the victim of whistleblower retaliation, you may file a written complaint (Form OSC–11) with the U.S. Office of Special Counsel at 1730 M Street NW., Suite 218, Washington, DC

20036–4505 or online through the OSC Web site—*http://www.osc.gov*.

Retaliation for Engaging in Protected Activity

A Federal agency cannot retaliate against an employee or applicant because that individual exercises his or her rights under any of the Federal antidiscrimination or whistleblower protection laws listed above. If you believe that you are the victim of retaliation for engaging in protected activity, you must follow, as appropriate, the procedures described in the Antidiscrimination Laws and Whistleblower Protection Laws sections or, if applicable, the administrative or negotiated grievance procedures in order to pursue any legal remedy.

Disciplinary Actions

Under the existing laws, each agency retains the right, where appropriate, to discipline a Federal employee for conduct that is inconsistent with Federal Antidiscrimination and Whistleblower Protection Laws up to and including removal. If OSC has initiated an investigation under 5 U.S.C. 1214, however, according to 5 U.S.C. 1214(f), agencies must seek approval from the Special Counsel to discipline employees for, among other activities, engaging in prohibited retaliation. Nothing in the No FEAR Act alters existing laws or permits an agency to take unfounded disciplinary action against a Federal employee or to violate the procedural rights of a Federal employee who has been accused of discrimination.

Additional Information

For further information regarding the No FEAR Act regulations, refer to 5 CFR part 724, as well as the appropriate offices within the Tennessee Valley Authority (*e.g.*, Equal Opportunity Compliance, Human Resources, the Office of the Inspector General, and TVA's Ombudsman). Additional information regarding Federal antidiscrimination, whistleblower protection and retaliation laws can be found at the EEOC Web site—*http://www.eeoc.gov* and the OSC Web site—*http://www.osc.gov*.

Existing Rights Unchanged

Pursuant to section 205 of the No FEAR Act, neither the Act nor this notice creates, expands or reduces any rights otherwise available to any employee, former employee or applicant under the laws of the United States.

FOR FURTHER INFORMATION CONTACT: Linda J. Sales-Long, 865–632–2515.

Dated: October 26, 2006.

Linda J. Sales-Long,

Director, Equal Opportunity Compliance.

[FR Doc. E6–18457 Filed 11–1–06; 8:45 am]

BILLING CODE 8120–08–P

DEPARTMENT OF TRANSPORTATION

Office of the Secretary

[Docket OST–2006–26230]

Disadvantaged Business Enterprise

AGENCY: Office of the Secretary, DOT.

ACTION: Notice and request for comments.

SUMMARY: In accordance with the Paperwork Reduction Act of 1995 (44 U.S.C. Chapter 35, as amended) this notice announces the Department of Transportation's (DOT) intention to request extension for a currently approved information collection.

DATES: Comments on this notice must be received by January 2, 2007.

ADDRESSES: To ensure that you do not duplicate your docket submissions, please submit them by only one of the following means to Docket OST–2006–26230:

(1) By mail to the Docket Management Facility (SVC–124), U.S. Department of Transportation, Room PL–401, 400 Seventh Street SW., Washington, DC 20590–0001. [It is important to note that because of current security procedures affecting the U.S. Mail, other means (*e.g.*, FedEx, UPS) may be faster];

(2) By delivery to room PL–401 on the Plaza Level of the Nassif Building, 400 Seventh Street SW., Washington, DC, between 9 a.m. and 5 p.m., Monday through Friday, except Federal holidays. The telephone number is 202–366–9329.

(3) By fax to the Docket Management Facility at 202–493–2251; or

(4) By electronic means through the Web site for the Docket Management System at: *http://dms.dot.gov*.

The Docket Management Facility maintains the public docket for this rulemaking. Comments to the docket will be available for inspection or copying at room PL–401 on the Plaza Level of the Nassif Building, 400 Seventh Street, SW., Washington, DC, between 9 a.m. and 5 p.m., Monday through Friday, except Federal holidays. The public may also review docketed comments electronically at: *http://dms.dot.gov.*

FOR FURTHER INFORMATION CONTACT: Mr. Robert C. Ashby, Office of the Secretary, Office of Assistant General Counsel for Regulation and Enforcement, Department of Transportation, 400 Seventh St., SW., Washington, DC 20590 (202)366–9310 (voice) 202–366–9313 (fax) or at *bob.ashby@ost.dot.gov.*

SUPPLEMENTARY INFORMATION: *Title:* Report of DBE Awards and Commitments.

OMB Control Number: 2105–0510.

Type of Request: Extension to a currently approved information collection.

Abstract: 49 CFR part 26 establishes requirements for the Department of Transportation (DOT) so as to comply with the mandate by statute including 1101 (b) of the Safe, Accountable, Flexible, Efficient Transportation Equity Act: A Legacy For Users (Pub. L. 109–59 and 49 U.S.C. 47113, Pub. L. 105–178. The key part of the collection is a requirement that state and local governments subject to the DBE program report to the Secretary of Transportation on DBE participation, as well as maintain a directory of DBE firms and report to the Secretary concerning the composition of the directory. If these reporting requirements were not available, firms controlled by minorities would not achieve the appropriate participation in DOT programs, and the Department would not be able to identify its recipients and evaluate the extent to which financial assistance recipients have been awarded a reasonable amount of contracting dollars to DBEs.

In order to minimize the burden on DOT recipients the Department has limited its informational request and reporting frequency to that necessary to meet its program and administrative monitoring requirements. The information request consists of 17 data items on one page and one attachment, to be completed on a semi-annual basis (for FHWA and FTA programs) or an annual basis (for FAA programs).

Respondents: DOT financially-assisted state and local transportation agencies.

Estimated Number of Respondents: 1,057.

Estimated Total Burden on Respondents: 1,311,000.

The information collection is available for inspection in the DOT Dockets Management System (DMS), 400 Seventh St., Washington, DC 20590 (202)366–9310.

Comments are Invited on: (a) Whether the collection of information is necessary for the proper performance of the functions of the Department, including whether the information will have practical utility; (b) the accuracy of the Department's estimate of the burden of the proposed information collection;

(c) ways to enhance the quality, utility and clarity of the information to be collected; and (d) ways to minimize the burden of the collection of information on respondents, including the use of automated collection techniques or other forms of information technology.

All responses to this notice will be summarized and included in the request for OMB approval. All comments will also become a matter of public record.

Issued in Washington, DC on October 27, 2006.

Robert C. Ashby,

Deputy Assistant General Counsel for Regulation and Enforcement.

[FR Doc. E6–18475 Filed 11–1–06; 8:45 am]

BILLING CODE 4910–9X–P

DEPARTMENT OF TRANSPORTATION

Federal Aviation Administration

Agency Information Collection Activity Seeking OMB Approval

AGENCY: Federal Aviation Administration (FAA), DOT.

ACTION: Notice.

SUMMARY: The FAA invites public comments about our intention to request the Office of Management and Budget's (OMB) revision of a current information collection. The **Federal Register** notice with a 60-day comment period soliciting comments on the following collection of information was published on June 28, 2006, vol. 71, no. 124, page 36869. The FAA Aviation Research and Development Grants Program establishes uniform policies and procedures for the award and administration of research grants to colleges, universities, and not for profit organizations.

DATES: Please submit comments by December 4, 2006.

FOR FURTHER INFORMATION CONTACT: Carla Mauney at *Carla.Mauney@faa.gov.*

SUPPLEMENTARY INFORMATION:

Federal Aviation Administration (FAA)

Title: FAA Research and Development Grants.

Type of Request: Revision of a currently approved collection.

OMB Control Number: 2120–0559.

Form(s): 9550–5, SF–424, SF–3881, SF–269, SF–270, SF–272.

Affected Public: An estimated 100 Respondents.

Frequency: This information is collected on occasion.

Estimated Average Burden per Response: Approximately 9.25 hours per response.

Estimated Annual Burden Hours: An estimated 925 hours annually.

Abstract: The FAA Aviation Research and Development Grants Program establishes uniform policies and procedures for the award and administration of research grants to colleges, universities, and not for profit organizations. This program implements OMB Circular A–110, Pub. L. 101–508 Section 9205 and 9208.

ADDRESSES: Interested persons are invited to submit written comments on the proposed information collection to the Office of Information and Regulatory Affairs, Office of Management and Budget. Comments should be addressed to Nathan Lesser, Desk Officer, Department of Transportation/FAA, and sent via electronic mail to *oira_submission@omb.eop.gov* or faxed to (202) 395–694.

Comments are invited on: Whether the proposed collection of information is necessary for the proper performance of the functions of the Department, including whether the information will have practical utility; the accuracy of the Department's estimates of the burden of the proposed information collection; ways to enhance the quality, utility, and clarity of the information to be collected; and ways to minimize the burden of the collection of information on respondents, including the use of automated collection techniques or other forms of information technology.

Issued in Washington, DC, on October 26, 2006.

Carla Mauney,

FAA Information Collection Clearance Officer, Information Systems and Technology Services Staff, ABA–20.

[FR Doc. 06–9024 Filed 11–1–06; 8:45 am]

BILLING CODE 4910–13–M

DEPARTMENT OF TRANSPORTATION

Maritime Administration

[USCG–2005–22611]

Neptune L.L.C., Liquefied Natural Gas Deepwater Port License Application; Final Application Public Hearings and Final Environmental Impact Statement

AGENCY: Maritime Administration, DOT.

ACTION: Notice of availability; notice of public hearings; request for comments.

SUMMARY: The Maritime Administration (MARAD) and the U.S. Coast Guard (USCG) announce the availability of the Final Environmental Impact Statement (FEIS) for the Neptune LNG LLC, Liquefied Natural Gas Deepwater Port license application. Also, public hearings will be held on matters relevant to the approval or denial of the license application. The application describes a project that would be located in Federal waters of Massachusetts Bay, in Block 125, approximately 8 miles southeast of Gloucester, MA and 22 miles northeast of Boston, MA. The Coast Guard and MARAD request public comments on the FEIS and application. Publication of this notice begins a 30 day comment period and provides information on how to participate in the process.

As a point of clarification, there is another deepwater port application by Northeast Gateway Energy Bridge, L.L.C. in the same vicinity. These applications are being processed and reviewed independently. The Northeast Gateway Energy Bridge, L.L.C. FEIS was noticed on an earlier date and is available on the Docket at USCG–2005–22219.

DATES: Public hearings will be held in Gloucester, MA on November 14, 2006 and in Salem, MA on November 15, 2006. Both hearings will be from 6 p.m. to 8 p.m. and will be preceded by an informational open house from 4:30 p.m. to 6 p.m. The public hearings may end later than the stated time, depending on the number of persons wishing to speak.

Material submitted in response to the request for comments on the FEIS and application must reach the Docket Management Facility by December 2, 2006 ending the 30 day public comment period.

Federal and State agencies must submit comments, recommended conditions for licensing, or letters of no objection by January 2, 2007 (45 days after the final public hearings). Also by January 2, 2007, the Governor of Massachusetts (the adjacent coastal state) may approve, disapprove, or notify MARAD of inconsistencies with State programs relating to environmental protection, land and water use, and coastal zone management for which MARAD may condition the license to make consistent.

MARAD must issue a record of decision (ROD) to approve, approve with conditions, or deny the DWP license application by February 13, 2007 (90 days after the public hearings).

For dates required by the Massachusetts Environmental Policy Act (MEPA) schedule, please see that section at the end of this notice.

ADDRESSES: The public hearing in Gloucester will be held at the Gloucester High School Auditorium, 32 Leslie O. Johnson Road, Gloucester, MA, telephone: 617–635–4100. The public hearing in Salem will be at the Salem State College Library, Charlotte Forten Hall, 360 Lafayette Street, Salem, MA, telephone: 978–542–7192.

The FEIS, the application, comments and associated documentation are available for viewing at the DOT's Docket Management System Web site: *http://dms.dot.gov* under docket number 22611. The FEIS is also available at public libraries in Beverly, Boston (Central Library), Gloucester, Manchester-by-the-Sea, Marblehead, and Salem.

Address docket submissions for USCG–2005–22611 to: Docket Management Facility, U.S. Department of Transportation , 400 Seventh Street, SW., Washington, DC 20590–0001.

The Docket Management Facility accepts hand-delivered submissions, and makes docket contents available for public inspection and copying at this address, in room PL–401, between 9 a.m. and 5 p.m., Monday through Friday, except Federal holidays. The Facility's telephone number is 202–366–9329, its fax number is 202–493–2251, and its Web site for electronic submissions or for electronic access to docket contents is *http://dms.dot.gov.*

FOR FURTHER INFORMATION CONTACT: Roddy Bachman, U.S. Coast Guard, telephone: 202–372–1451, e-mail: *Roddy.C.Bachman@uscg.mil.* If you have questions on viewing the docket, call Renee V. Wright, Program Manager, Docket Operations, telephone: 202–493–0402.

SUPPLEMENTARY INFORMATION:

Public Hearing and Open House

We invite you to learn about the proposed deepwater port at an informational open house, and to comment at a public hearing on the proposed action and the evaluation contained in the FEIS.

In order to allow everyone a chance to speak at the public hearings, we may limit speaker time, or extend the hearing hours, or both. You must identify yourself, and any organization you represent, by name. Your remarks will be recorded or transcribed for inclusion in the public docket.

You may submit written material at the public hearing, either in place of or in addition to speaking. Written material must include your name and address, and will be included in the public docket.

Public docket materials will be made available to the public on the Docket Management Facility's Docket Management System (DMS). *See* ''Request for Comments'' for information about DMS and your rights under the Privacy Act.

All of our public hearing locations are wheelchair-accessible. If you plan to attend an open house or public hearing, and need special assistance such as sign language interpretation or other reasonable accommodation, please notify the Coast Guard (*see* **FOR FURTHER INFORMATION CONTACT**) at least 3 business days in advance. Include your contact information as well as information about your specific needs.

Request for Comments

We request public comments or other relevant information on the FEIS and application. The public hearing is not the only opportunity you have to comment. In addition to or in place of attending a hearing, you can submit comments to the Docket Management Facility during the public comment period (*see* **DATES**). The Coast Guard and MARAD will consider all comments and materials received during the comment period.

Submissions should include:

- Docket number USCG–2005–22611.
- Your name and address.
- Your reasons for making each comment or for bringing information to our attention.

Submit comments or material using only one of the following methods:

- Electronic submission to DMS, *http://dms.dot.gov.*
- Fax, mail, or hand delivery to the Docket Management Facility (*see* **ADDRESSES**). Faxed or hand delivered submissions must be unbound, no larger than 8½ by 11 inches, and suitable for copying and electronic scanning. If you mail your submission and want to know when it reaches the Facility, include a stamped, self-addressed postcard or envelope.

Regardless of the method used for submitting comments or material, all submissions will be posted, without change, to the DMS Web site (*http://dms.dot.gov*), and will include any personal information you provide. Therefore, submitting this information makes it public. You may wish to read the Privacy Act notice that is available on the DMS Web site, or the Department of Transportation Privacy Act Statement that appeared in the **Federal Register** on April 11, 2000 (65 FR 19477).

You may view docket submissions at the Docket Management Facility (*see* **ADDRESSES**), or electronically on the DMS Web site.

Background

We published the Notice of Application for the proposed Neptune liquefied natural gas (LNG) deepwater port and information on regulations and statutes governing licensing in the **Federal Register** at 70 FR 58729, October 7, 2005; the Notice of Intent to Prepare an EIS for the proposed action was published at 70 FR 61151, October 20, 2005; and the Notice of Availability of the Draft EIS was published at 71 FR 32382, June 5, 2006. Information from the ''Summary of the Application'' from previous **Federal Register** notices is included below for your convenience.

Proposed Action and Alternatives

The proposed action requiring environmental review is the Federal licensing of the proposed deepwater port described in ''Summary of the Application'' below. The alternatives to licensing the proposed port are: (1) Licensing with conditions (including conditions designed to mitigate environmental impact), and (2) denying the application, which for purposes of environmental review is the ''no-action'' alternative. These alternatives are more fully discussed in the FEIS. The Coast Guard is the lead Federal agency for the preparation of the EIS. You can address any questions about the proposed action or the FEIS to the Coast Guard project manager identified in **FOR FURTHER INFORMATION CONTACT**.

Summary of the Application

Neptune LNG LLC proposes to own, construct, and operate a deepwater port, named Neptune, in the Federal waters of the Outer Continental Shelf on blocks NK 19–04 6525 and NK 19–04 6575, approximately 8 miles southeast of Gloucester, MA and 22 miles northeast of Boston, Massachusetts, in a water depth of approximately 250 feet. The Neptune deepwater port would be capable of mooring up to two approximately 140,000 cubic meter capacity LNG carriers by means of a submerged unloading buoy system.

The LNG carriers, or shuttle and regasification vessels (SRVs), would be equipped to store, transport and vaporize LNG, and to odorize and meter natural gas which would then be sent out by conventional subsea pipelines. Each SRV would have insulated storage tanks located within its hull. Each tank would be equipped with an in-tank pump to circulate and transfer LNG to the vaporization facilities located on the deck of the SRV. The proposed vaporization system would be a closed-loop water-glycol heat exchanger heated by steam from natural gas-fired boilers.

The major fixed components of the proposed deepwater port would be an unloading buoy system, eight mooring lines consisting of wire rope and chain connecting to anchor points on the seabed, eight suction pile anchor points, approximately 2.3 miles of natural gas flow line with flexible pipe risers and risers manifolds, and approximately 11 miles of 24-inch natural gas

transmission line to connect to the existing Algonquin HubLine.

Neptune would have an average throughput capacity of 500 million standard cubic feet per day (MMscfd) and a peak capacity of approximately 750 MMscfd. Natural gas would be sent out by means of two flexible risers and subsea flowlines leading to a 24-inch gas transmission pipeline. The transmission pipeline would connect the deepwater port to the existing 30-inch Algonquin HubLine. No onshore components or storage facilities are associated with the proposed deepwater port application. Construction of the deepwater port components would be expected to take 36 months, with a startup of commercial operations in late 2009. The deepwater port would be designed, constructed and operated in accordance with applicable codes and standards and would have an expected operating life of approximately 20 years.

U.S. Army Corps of Engineers Permits

Pipelines within the three-mile limit require an Army Corps of Engineers (USACE) permit under Section 404 of the Clean Water Act and Section 10 of the Rivers and Harbors Act. Structures such as the moorings and lateral pipelines beyond the three-mile limit require a Section 10 permit.

As required by their regulations, the USACE has maintained a permit file. The USACE New England District phone number is 978–318–8338 and their Web site is *http://www.nae.usace.army.mil.*

Comments sent to the USACE have been incorporated into the EIS; will continue to be incorporated into the DOT docket; and will continue to be considered in the licensing and USACE permitting decisions. The USACE, among others, is a cooperating agency; is assisting in the NEPA process as described in 40 CFR 1501.6., and has conducted joint public hearings with the Coast Guard and MARAD.

Massachusetts Environmental Policy Act (MEPA)

Through a Special Review Procedure established by the Massachusetts Executive Office of Environmental Affairs (EOEA), the USCG and the MEPA Office are conducting a coordinated NEPA/MEPA review allowing a single document to serve simultaneously as both the EIS under NEPA and the Environmental Impact Report (EIR) under MEPA. The Certificates establishing the Special Review Procedure and the Scope for the Draft Environmental Impact Report can be viewed at *http://www.mass.gov/envir/mepa/secondlevelpages/recentdecisions.htm.* The EIR will be published in the Environmental Monitor on November 8, 2006; ENF comments are due November 28, 2006; ENF decisions are due December 8, 2006; the Secretary of Environmental Affairs will accept written comments on the Environmental Impact Report through December 8, 2006; and the EIR decisions (Certificate) is due December 15, 2006. Comments may be submitted electronically, by mail, via FAX, or by hand delivery. Please note that comments submitted on MEPA documents are public records. The mailing address for comments is: Secretary Robert W. Golledge, Jr., EOEA, Attn: MEPA Office, Richard Bourre, EOEA No. 13473/13474, 100 Cambridge Street, Suite 900, Boston MA 02114.

Dated: October 30, 2006.

Joel C. Richard,

Secretary, Maritime Administration.

[FR Doc. E6–18496 Filed 11–1–06; 8:45 am]

BILLING CODE 4910–81–P

DEPARTMENT OF TRANSPORTATION

Surface Transportation Board

[STB Docket No. AB–998X]

Timber Rock Railroad, Inc.—Discontinuance of Service Exemption—In Burleson, Brazos, Grimes, Montgomery, Liberty, Hardin and Jefferson Counties, TX

On October 13, 2006, Timber Rock Railroad, Inc. (TIBR) filed with the Surface Transportation Board a petition under 49 U.S.C. 10502 for exemption from the provisions of 49 U.S.C. 10903. TIBR seeks to discontinue service over a 116-mile portion of rail line that it operates under lease from BNSF Railway Company (BNSF), the owner of the line. The line extends between (1) milepost 149.5 near Silsbee, TX, and milepost 52.5 near Dobbin, TX, (2) milepost 20.70 near Silsbee, TX, and milepost 4.5 near Beaumont, TX, and (3) milepost 149.5 and milepost 152.30 and track No. 498 in the Silsbee Yard near Silsbee, TX. TIBR also seeks to discontinue its 54.72 miles of overhead trackage rights operations over BNSF lines extending between (1) milepost 52.5 near Dobbin, TX, and milepost 144.0 on the BNSF Galveston Subdivision at Somerville, TX, and (2) milepost 4.5 near Beaumont, TX, and milepost 2.28 at Beaumont, TX.[1] The lines traverse U.S. Postal Service Zip Codes 77703, 77708, 77713, 77657, 77709, 77656, 77625, 77374, 77376, 77369, 77368, 77327, 77328, 77301, 77302, 77304, 77306, 77316, 77356, 77333, 77363, 77868, 77869 and 77879. The lines are located in Burleson, Brazos, Grimes, Montgomery, Liberty, Hardin and Jefferson Counties, TX. They include the stations of Dobbin, Montgomery, Conroe, Youens, Waukegan, Security, Fostoria, Cleveland, Hightower, Rayburn, Dollen, Romayor, Votaw, Bragg, Honey Island and Kountze. TIBR states that BNSF will resume providing both local and overhead operations on the lines.

The lines do not contain federally granted rights-of-way. Any documentation in TIBR's possession will be made available promptly to those requesting it.

The interest of railroad employees will be protected by the conditions set forth in *Oregon Short Line R. Co.—Abandonment—Goshen*, 360 I.C.C. 91 (1979).

By issuance of this notice, the Board is instituting an exemption proceeding pursuant to 49 U.S.C. 10502(b). A final decision will be issued by January 31, 2007.

Any offer of financial assistance (OFA) under 49 CFR 1152.27(b)(2) to subsidize continued rail service will be due no later than 10 days after service of a decision granting the petition for exemption. Each offer must be accompanied by a $1,300 filing fee. *See* 49 CFR 1002.2(f)(25).[2]

All filings in response to this notice must refer to STB Docket No. AB–998X, and must be sent to: (1) Surface Transportation Board, 1925 K Street, NW., Washington, DC 20423–0001, and (2) Karl Morell, Ball Janik LLP, 1455 F Street, NW., Suite 225, Washington, DC 20005.

Persons seeking further information concerning discontinuance procedures may contact the Board's Office of Public Services at (202) 565–1592 or refer to the full abandonment or discontinuance regulations at 49 CFR part 1152.

---

[1] TIBR was authorized to lease from BNSF and operate approximately 117.82 miles of rail line in Texas. TIBR also was authorized to acquire 54.72 miles of incidental overhead trackage rights over connecting BNSF rail lines. *See Timber Rock Railroad, Inc. Lease Exemption—The Burlington Northern and Santa Fe Railway Company*, STB Finance Docket No. 34503 (STB served July 14, 2004, and Oct. 8, 2004). TIBR will continue to lease the 0.46-mile line between milepost 0.5 and milepost 0.96 near Kirbyville, TX, a .26-mile portion between milepost 152.30 and milepost 152.56 at Silsbee, TX, and a 1.10-mile portion between milepost 20.70 and 21.8 at Silsbee, TX, and the Silsbee Yard Tracks, except for Track No. 498, to accommodate better the continued interchange of traffic between BNSF and TIBR at Silsbee, TX.

[2] Because this is a discontinuance proceeding and not an abandonment, trail use/rail banking and public use conditions are not appropriate. Likewise, no environmental or historic documentation is required under 49 CFR 1105.6(c) and 1105.8.

Questions concerning environmental issues may be directed to the Board's Section of Environmental Analysis (SEA) at (202) 565–1539. [Assistance for the hearing impaired is available through the Federal Information Relay Service (FIRS) at 1–800–877–8339.]

Board decisions and notices are available on our Web site at *http://www.stb.dot.gov*.

Decided: October 25, 2006.

By the Board, David M. Konschnik, Director, Office of Proceedings.

Vernon A. Williams,

Secretary.

[FR Doc. E6–18411 Filed 11–1–06; 8:45 am]

BILLING CODE 4915–01–P

DEPARTMENT OF VETERANS AFFAIRS

Performance Review Board Members

AGENCY: Department of Veterans Affairs.

ACTION: Notice.

SUMMARY: Under the provisions of 5 U.S.C. 4314(c)(4) agencies are required to publish a notice in the **Federal Register** of the appointment of Performance Review Board (PRB) members. This notice updates the VA Performance Review Board of the Department of Veterans Affairs that was published in the **Federal Register** on 70 FR 61510, October 24, 2005.

DATES: *Effective Date:* November 2, 2006.

FOR FURTHER INFORMATION CONTACT: Charlotte Moment, Office of Human Resources Management (052B), Department of Veterans Affairs, 810 Vermont Avenue, NW., Washington, DC 20420, (202) 273–8165.

VA Performance Review Board (PRB)

R. Allen Pittman, Assistant Secretary for Human Resources and Administration (Chairperson).
Thomas G. Bowman, Chief of Staff.
Sharon K. Barnes, Deputy Chief of Staff (Alternate).
Ronald R. Aument, Deputy Under Secretary for Benefits, Veterans Benefits Administration.
Michael Walcoff, Associate Deputy Under Secretary for Operations, Veterans Benefits Administration (Alternate).
Gerald M. Cross, M.D., FAAFP, Acting Principal Deputy Under Secretary for Health, Veterans Health Administration.
William F. Feeley, Deputy Under Secretary for Health for Operations and Management, Veterans Health Administration (Alternate).
Arthur S. Hamerschlag, Chief of Staff, Veterans Health Administration (Alternate).
John H. Thompson, Deputy General Counsel.
Rita Reed, Principal Deputy Assistant Secretary for Management.
Jon A. Wooditch, Deputy Inspector General.
Robert T. Howard, Executive Director.
Kenneth M. Greenberg, Executive Secretary to the Department.
Richard Wannemacher, Jr., Senior Advisor.

Veterans Benefits Administration PRB

Ronald R. Aument, Deputy Under Secretary for Benefits, (Chairperson).
Geraldine V. Breakfield, Associate Deputy Under Secretary for Management.
Jack F. McCoy, Associate Deputy Under Secretary for Policy & Program Management.
Michael Walcoff, Associate Deputy Under Secretary for Field Operations.
James Bohmbach, Chief Financial Officer.
Diana M. Rubens, Director, Western Area Office.
Sharon K. Barnes, Deputy Chief of Staff, Office of the Secretary.

Veterans Health Administration PRB

Gerald M. Cross, MD, FAAFP, Acting Principal Deputy Under Secretary for Health.
William F. Feeley, Vice-Chair, Deputy Under Secretary for Health for Operations and Management.
Linda W. Belton, Network Director, VISN 11.
Everett A. Chasen, Chief Communications Officer.
Jeanette A. Chirico-Post, MD, Network Director, VISN 1.
Barbara B. Fleming, MD, PhD, Chief Quality and Performance Officer.
Arthur S. Hamerschlag, VHA Chief of Staff.
W. Paul Kearns III, Acting Chief Financial Officer.
Robert E. Lynch, MD, Network Director, VISN 16.
James J. Nocks, M.D., Network Director, VISN 5.
Robert A. Petzel, MD, Network Director, VISN 23.
Catherine J. Rick, RN, MSN, Chief Nursing Officer.
James Roseborough, Network Director, VISN 12.
Patricia Vandenberg, Assistant Deputy Under Secretary for Health for Policy and Planning.
Nevin M. Weaver, Director, Management Support Office (Ex Officio).
Robert L. Wiebe, MD, Network Director, VISN 21.
Joseph A. Williams, Jr., Assistant Deputy Under Secretary for Health for Operations and Management.
Sharon K. Barnes, Deputy Chief of Staff, Office of the Secretary.

Office of Inspector General PRB

Elliot P. Lewis, Assistant Inspector General for Audit, Department of Labor.
Michael P. Stephens, Deputy Inspector General, Department of Housing and Urban Development, Office of Inspector General.
Thomas J. Howard, Deputy Inspector General, National Air and Space Administration, Office of Inspector General.

Dated: October 26, 2006.

R. James Nicholson,

Secretary of Veterans Affairs.

[FR Doc. E6–18419 Filed 11–1–06; 8:45 am]

BILLING CODE 8320–01–P

Federal Register

Thursday,
November 2, 2006

Part II

The President

Proclamation 8074—National Adoption Month, 2006

Proclamation 8075—National Alzheimer's Disease Awareness Month, 2006

Proclamation 8076—National American Indian Heritage Month, 2006

Proclamation 8077—National Diabetes Month, 2006

Proclamation 8078—National Family Caregivers Month, 2006

Proclamation 8079—National Hospice Month, 2006

Federal Register
Vol. 71, No. 212
Thursday, November 2, 2006

Presidential Documents

Title 3—

The President

Proclamation 8074 of October 30, 2006

National Adoption Month, 2006

By the President of the United States of America

A Proclamation

During National Adoption Month, we encourage the adoption of young people in need, and we honor the adoptive and foster families who have offered children a loving and supportive home.

The best of America is reflected in the many citizens who have adopted children as their own. Mothers and fathers are the most important influences in a child's life, and children with caring, involved parents can better realize the full promise of America. Parents help their children thrive by encouraging them to aim high, work hard, and make good choices that will lead to healthy, satisfying lives. On November 18, loving families across America will celebrate National Adoption Day by finalizing their adoptions of children from foster care. This day will also raise awareness of the many children still waiting to be adopted and encourage more Americans to choose adoption.

My Administration is committed to helping place children with caring families. Through the Collaboration to AdoptUsKids project at adoptuskids.org, we are working to provide guidance and support for parents considering adoption. We are also offering tax credits to ease the financial burden on adoptive families, and we are providing funding to help strengthen State adoption services through the Adoption Incentives Program and the Promoting Safe and Stable Families Program. Together, these efforts can help connect children with loving families and help provide greater hope and opportunity for America's children.

During National Adoption Month, we pay tribute to the parents who have opened their hearts and homes and helped provide love and stability for young people. By caring for the youngest members of our society, these families are helping our children grow into successful adults and building the future of our country.

NOW, THEREFORE, I, GEORGE W. BUSH, President of the United States of America, by virtue of the authority vested in me by the Constitution and laws of the United States, do hereby proclaim November 2006 as National Adoption Month. I call upon all Americans to observe this month with appropriate programs and activities to honor adoptive families and to participate in efforts to find permanent homes for waiting children.

IN WITNESS WHEREOF, I have hereunto set my hand this thirtieth day of October, in the year of our Lord two thousand six, and of the Independence of the United States of America the two hundred and thirty-first.

[FR Doc. 06–9052
Filed 11–1–06; 8:45 am]
Billing code 3195–01–P

Presidential Documents

Proclamation 8075 of October 30, 2006

National Alzheimer's Disease Awareness Month, 2006

By the President of the United States of America

A Proclamation

During National Alzheimer's Disease Awareness Month, we renew our resolve in the fight against this devastating disease, and we take time to remember the loved ones taken from us by Alzheimer's. We also recognize the patients and family members who are affected by it, and we extend our gratitude to the caretakers and researchers who are pursuing better treatments and a cure.

Age is the greatest risk factor for Alzheimer's disease, so the need for prevention, improved treatments, and a cure becomes increasingly urgent as more Americans grow older. My Administration is pursuing the tremendous possibilities that science offers to improve the lives of the millions suffering from this disease. We continue to support Alzheimer's disease research through the National Institutes of Health and the Department of Veterans Affairs. New progress is being made as more is learned about this disease.

America is blessed by our seniors, and they have earned our greatest respect. Citizens living with Alzheimer's disease deserve the best possible care. National Alzheimer's Disease Awareness Month is an opportunity for Americans to offer our support to Alzheimer's patients and those who sacrifice to help them live with dignity and comfort. The strength and compassion of these individuals reflect the good heart of the American people.

NOW, THEREFORE, I, GEORGE W. BUSH, President of the United States of America, by virtue of the authority vested in me by the Constitution and laws of the United States, do hereby proclaim November 2006 as National Alzheimer's Disease Awareness Month. I call upon the people of the United States to observe this month with appropriate programs and activities.

IN WITNESS WHEREOF, I have hereunto set my hand this thirtieth day of October, in the year of our Lord two thousand six, and of the Independence of the United States of America the two hundred and thirty-first.

[FR Doc. 06–9060
Filed 11–1–06; 8:45 am]
Billing code 3195–01–P

Presidential Documents

Proclamation 8076 of October 30, 2006

National American Indian Heritage Month, 2006

By the President of the United States of America

A Proclamation

During National American Indian Heritage Month, we honor the generations of American Indians and Alaska Natives who have added to the character of our Nation. This month is an opportunity to celebrate their many accomplishments and their rich ancestry and traditions.

America is blessed by the character and strength of American Indians and Alaska Natives, and our citizens are grateful for the countless ways Native Americans have enriched our country and lifted the spirit of our Nation. We are especially grateful for the Native Americans who have served and continue to serve in our Nation's military. These brave individuals have risked their lives to protect our citizens, defend our democracy, and spread the blessings of liberty to people around the world.

My Administration is working to ensure that American Indians and Alaska Natives have access to all the opportunities of this great land. My fiscal year 2007 budget proposes more than $12.7 billion for government programs for Native Americans. Education is vital to ensuring all citizens reach their full potential, and my budget includes funding to help Native-American schools succeed and meet the requirements of the No Child Left Behind Act. The Bureau of Indian Affairs is providing education for approximately 46,000 American-Indian and Alaska-Native children. To help keep Native Americans safe, I have also proposed to increase law enforcement personnel and improve law enforcement facilities in American-Indian communities. My Administration will continue to work on a government-to-government basis with tribal governments, honor the principles of tribal sovereignty and the right to self-determination, and help ensure America remains a land of promise for American Indians, Alaska Natives, and all our citizens.

NOW, THEREFORE, I, GEORGE W. BUSH, President of the United States of America, by virtue of the authority vested in me by the Constitution and laws of the United States, do hereby proclaim November 2006 as National American Indian Heritage Month. I call upon all Americans to commemorate this month with appropriate programs and activities.

IN WITNESS WHEREOF, I have hereunto set my hand this thirtieth day of October, in the year of our Lord two thousand six, and of the Independence of the United States of America the two hundred and thirty-first.

[FR Doc. 06–9061
Filed 11–1–06; 8:45 am]
Billing code 3195–01–P

Presidential Documents

Proclamation 8077 of October 30, 2006

National Diabetes Month, 2006

By the President of the United States of America

A Proclamation

National Diabetes Month is an opportunity to raise awareness of risk factors, prevention, and treatment of this serious disease.

Diabetes is a chronic illness affecting nearly 21 million Americans of all ages and backgrounds. It can cause blindness, nontraumatic amputations, kidney disease, and increased risk of heart disease and stroke. Though diabetes affects Americans of all racial and ethnic backgrounds, certain groups are at higher risk, including Hispanic, Asian/Pacific, African, and Native Americans. A small percentage of people with the disease suffer from Type 1 diabetes, once known as juvenile diabetes. These individuals are usually children or young adults whose bodies are unable to make insulin. Type 2 diabetes is more common and frequently occurs in individuals who have a family history of the disease and in people who are obese, inactive, or older. This form of diabetes stops a person's body from using insulin properly. By maintaining healthy eating habits and exercising daily, Americans can help prevent and reduce the effects of diabetes. Individuals should consult with their doctors and receive a preventive screening to help detect diabetes in its earliest stages.

My Administration has demonstrated a strong commitment to preventing and finding a cure for diabetes. We have supported funding for diabetes education programs and research initiatives, and this year the National Institutes of Health (NIH) estimates that more than $1 billion will be spent on diabetes research. The NIH and the Centers for Disease Control and Prevention are sponsoring the National Diabetes Education Program, which has helped inform millions of Americans about the risk factors of diabetes and the benefits of making healthy choices. By working together we can continue to make significant strides in the battle to beat this disease and provide a brighter future for many of our citizens.

As we observe National Diabetes Month, we recognize the medical professionals, researchers, and all those whose tireless efforts are making a positive difference in the lives of Americans suffering from this disease. This month we reaffirm our commitment to fighting diabetes, and through medical advances, preventive programs, and quality health care, we will help diabetes patients live longer, healthier, and happier lives.

NOW, THEREFORE, I, GEORGE W. BUSH, President of the United States of America, by virtue of the authority vested in me by the Constitution and laws of the United States, do hereby proclaim November 2006 as National Diabetes Month. I call upon all Americans to learn more about the risk factors and symptoms associated with diabetes and to observe this month with appropriate programs and activities.

IN WITNESS WHEREOF, I have hereunto set my hand this thirtieth day of October, in the year of our Lord two thousand six, and of the Independence of the United States of America the two hundred and thirty-first.

[FR Doc. 06–9062
Filed 11–1–06; 8:45 am]
Billing code 3195–01–P

Presidential Documents

Proclamation 8078 of October 30, 2006

National Family Caregivers Month, 2006

By the President of the United States of America

A Proclamation

Our country is blessed to have millions of compassionate citizens who bring love and support to family members and friends who are chronically ill, elderly, or disabled. During National Family Caregivers Month, we recognize these kind individuals who give of their hearts, resources, and energy to assist loved ones in need.

Family caregivers exemplify the true spirit of compassion by providing support to their loved ones and assisting with their everyday activities and special needs. These selfless people must often make great personal sacrifices to maintain the care and support their family and friends require. Their assistance provides those who may be ill, aging, or disabled an opportunity to stay in familiar surroundings and remain a part of their community.

My Administration is committed to supporting family caregivers and their vital role in our Nation's communities. The National Family Caregiver Support Program continues to provide information, counseling, and services and encourages cooperation among agencies and other providers that work with caregivers. These efforts assist caregivers and help ensure that all Americans receive the care they need.

As we observe National Family Caregivers Month, we honor family caregivers who take time out of their lives to improve the lives of family and friends. Their efforts demonstrate the best of the American spirit.

NOW, THEREFORE, I, GEORGE W. BUSH, President of the United States of America, by virtue of the authority vested in me by the Constitution and laws of the United States, do hereby proclaim November 2006 as National Family Caregivers Month. I encourage all Americans to honor the selfless service of caregivers who support their loved ones in need.

IN WITNESS WHEREOF, I have hereunto set my hand this thirtieth day of October, in the year of our Lord two thousand six, and of the Independence of the United States of America the two hundred and thirty-first.

[FR Doc. 06–9063
Filed 11–1–06; 8:45 am]
Billing code 3195–01–P

Presidential Documents

Proclamation 8079 of October 30, 2006

National Hospice Month, 2006

By the President of the United States of America

A Proclamation

Americans demonstrate the great compassion of our country by caring for those in need. During National Hospice Month, we recognize hospice caregivers for their dedication to providing comfort and peace to individuals in their last days and helping build a society that values the life and dignity of every person.

Hospice physicians, nurses, counselors, and volunteers bring care and support to the terminally ill through physical, psychological, social, and spiritual aid. By helping control pain and minimize other symptoms, these men and women bring relief to those who are terminally ill and show them the utmost respect. Hospice care enables many of our citizens to spend their final days in comfort and dignity surrounded by loved ones. This palliative care plays a vital role in our Nation's health care system, and the dedicated work of hospice caregivers helps ensure that our citizens receive the services and support they need. Hospice caregivers also reach out to families and friends to provide guidance and counseling after the loss of a loved one.

Our Nation is grateful for the tireless efforts of hospice volunteers and medical professionals, and during National Hospice Month, we recognize the kindness of hospice caregivers and their devotion to making our country a more loving and caring place.

NOW, THEREFORE, I, GEORGE W. BUSH, President of the United States of America, by virtue of the authority vested in me by the Constitution and laws of the United States, do hereby proclaim November 2006 as National Hospice Month. I encourage all Americans to observe this month with appropriate programs and activities. I also ask Americans to recognize our health care professionals and volunteers for their contributions to helping provide comfort and care to those facing terminal illness.

IN WITNESS WHEREOF, I have hereunto set my hand this thirtieth day of October, in the year of our Lord two thousand six, and of the Independence of the United States of America the two hundred and thirty-first.

[FR Doc. 06–9064
Filed 11–1–06; 8:45 am]
Billing code 3195–01–P

Federal Register

Thursday,
November 2, 2006

Part III

The President

Proclamation 8080—Veterans Day, 2006

Notice of November 1, 2006—Continuation of the National Emergency With Respect to Sudan

Federal Register
Vol. 71, No. 212
Thursday, November 2, 2006

Presidential Documents

Title 3—

The President

Proclamation 8080 of October 31, 2006

Veterans Day, 2006

By the President of the United States of America

A Proclamation

Through the generations, America's men and women in uniform have defeated tyrants, liberated continents, and set a standard of courage and idealism for the entire world. On Veterans Day, our Nation pays tribute to those who have proudly served in our Armed Forces.

To protect the Nation they love, our veterans stepped forward when America needed them most. In conflicts around the world, their sacrifice and resolve helped destroy the enemies of freedom and saved millions from oppression. In answering history's call with honor, decency, and resolve, our veterans have shown the power of liberty and earned the respect and admiration of a grateful Nation.

All of America's veterans have placed our Nation's security before their own lives, creating a debt that we can never fully repay. Our veterans represent the best of America, and they deserve the best America can give them.

As we recall the service of our Soldiers, Sailors, Airmen, Marines, and Coast Guardsmen, we are reminded that the defense of freedom comes with great loss and sacrifice. This Veterans Day, we give thanks to those who have served freedom's cause; we salute the members of our Armed Forces who are confronting our adversaries abroad; and we honor the men and women who left America's shores but did not live to be thanked as veterans. They will always be remembered by our country.

With respect for and in recognition of the contributions our service men and women have made to the cause of peace and freedom around the world, the Congress has provided (5 U.S.C. 6103(a)) that November 11 of each year shall be set aside as a legal public holiday to honor veterans.

NOW, THEREFORE, I, GEORGE W. BUSH, President of the United States of America, do hereby proclaim November 11, 2006, as Veterans Day and urge all Americans to observe November 5 through November 11, 2006, as National Veterans Awareness Week. I encourage all Americans to recognize the valor and sacrifice of our veterans through ceremonies and prayers. I call upon Federal, State, and local officials to display the flag of the United States and to support and participate in patriotic activities in their communities. I invite civic and fraternal organizations, places of worship, schools, businesses, unions, and the media to support this national observance with commemorative expressions and programs.

IN WITNESS WHEREOF, I have hereunto set my hand this thirty-first day of October, in the year of our Lord two thousand six, and of the Independence of the United States of America the two hundred and thirty-first.

[FR Doc. 06–9069
Filed 11–1–06; 11:31 am]
Billing code 3195–01–P

Presidential Documents

Notice of November 1, 2006

Continuation of the National Emergency With Respect to Sudan

On November 3, 1997, by Executive Order 13067, the President declared a national emergency with respect to Sudan pursuant to the International Emergency Economic Powers Act (50 U.S.C. 1701–1706) to deal with the unusual and extraordinary threat to the national security and foreign policy of the United States constituted by the actions and policies of the Government of Sudan. On April 26, 2006, by Executive Order 13400, I expanded the national emergency by determining that the conflict in Sudan's Darfur region posed an unusual and extraordinary threat to the national security and foreign policy of the United States, and I ordered the blocking of property of certain persons connected to that conflict. On October 13, 2006, I issued Executive Order 13412 to amend the comprehensive sanctions with respect to Sudan set forth in Executive Order 13067.

Because the actions and policies of the Government of Sudan continue to pose an unusual and extraordinary threat to the national security and foreign policy of the United States, the national emergency declared on November 3, 1997, as expanded on April 26, 2006, must continue in effect beyond November 3, 2006. Therefore, consistent with section 202(d) of the National Emergencies Act (50 U.S.C. 1622(d)), I am continuing for 1 year the national emergency with respect to Sudan.

This notice shall be published in the **Federal Register** and transmitted to the Congress.

THE WHITE HOUSE,

November 1, 2006.

[FR Doc. 06–9070

Filed 11–1–06; 11:31 am]

Billing code 3195–01–P

Reader Aids

Federal Register

Vol. 71, No. 212

Thursday, November 2, 2006

CUSTOMER SERVICE AND INFORMATION

Federal Register/Code of Federal Regulations	
General Information, indexes and other finding aids	**202–741–6000**
Laws	**741–6000**
Presidential Documents	
Executive orders and proclamations	**741–6000**
The United States Government Manual	**741–6000**
Other Services	
Electronic and on-line services (voice)	**741–6020**
Privacy Act Compilation	**741–6064**
Public Laws Update Service (numbers, dates, etc.)	**741–6043**
TTY for the deaf-and-hard-of-hearing	**741–6086**

ELECTRONIC RESEARCH

World Wide Web

Full text of the daily Federal Register, CFR and other publications is located at: **http://www.gpoaccess.gov/nara/index.html**

Federal Register information and research tools, including Public Inspection List, indexes, and links to GPO Access are located at: **http://www.archives. gov/federal__register**

E-mail

FEDREGTOC-L (Federal Register Table of Contents LISTSERV) is an open e-mail service that provides subscribers with a digital form of the Federal Register Table of Contents. The digital form of the Federal Register Table of Contents includes HTML and PDF links to the full text of each document.

To join or leave, go to **http://listserv.access.gpo.gov** and select *Online mailing list archives, FEDREGTOC-L, Join or leave the list (or change settings);* then follow the instructions.

PENS (Public Law Electronic Notification Service) is an e-mail service that notifies subscribers of recently enacted laws.

To subscribe, go to **http://listserv.gsa.gov/archives/publaws-l.html** and select *Join or leave the list (or change settings);* then follow the instructions.

FEDREGTOC-L and **PENS** are mailing lists only. We cannot respond to specific inquiries.

Reference questions. Send questions and comments about the Federal Register system to: **fedreg.info@nara.gov**

The Federal Register staff cannot interpret specific documents or regulations.

FEDERAL REGISTER PAGES AND DATE, NOVEMBER

64111–64438 1
64439–64630 2

CFR PARTS AFFECTED DURING NOVEMBER

At the end of each month, the Office of the Federal Register publishes separately a List of CFR Sections Affected (LSA), which lists parts and sections affected by documents published since the revision date of each title.

3 CFR

Proclamations:
8074 64613
8075 64615
8076 64617
8077 64619
8078 64621
8079 64623
8080 64627

Executive Orders:
13067 (See Notice of November 1, 2006) 64629
13400 (See Notice of November 1, 2006) 64629
13412 (See Notice of November 1, 2006) 64629

Administrative Orders:
Presidential Determinations:
No. 2006-25 64431
No. 2007-1 64435
No. 2007-2 64437
Notices:
Notice of November 1, 2006 64629

7 CFR

1210 64439

Proposed Rules:
51 64478

10 CFR

Proposed Rules:
35 64168
51 64169

14 CFR

39 64441
93 64111

Proposed Rules:
25 64478
39 ..... 64482, 64484

17 CFR

140 64443

Proposed Rules:
170 64171

18 CFR

292 64342

21 CFR

522 64451

22 CFR

97 64451

23 CFR

Proposed Rules:
630 64173

24 CFR

291 64422

25 CFR

Proposed Rules:
15 64181
18 64181
150 64181
152 64181
179 64181

26 CFR

1 64458
301 64458

Proposed Rules:
1 64488
20 64488
25 64488
31 64488
53 64488
54 64488
56 64488
301 ..... 64496, 54501

28 CFR

Proposed Rules:
524 64504
545 64505
550 64507

33 CFR

117 64113
165 ..... 64114, 64116

34 CFR

668 ..... 64378, 64402
673 64378
682 64378
685 64378
690 64402
691 64402

39 CFR

111 ..... 64118, 64121

40 CFR

52 ..... 64125, 64460, 64465, 64468, 64470
174 64128

Proposed Rules:
52 64182

43 CFR

Proposed Rules:
4 64181
30 64181

44 CFR

67 ..... 64132, 64141, 64148

Proposed Rules:
67 ..... 64183, 64208, 64211

47 CFR

73 .....64150, 64152, 64153, 64154
76.....64154

49 CFR

571.....64473

50 CFR

635.....64165
665.....64474
Proposed Rules:
635.....64123
648.....64214
660.....64216
679.....64218

REMINDERS

The items in this list were editorially compiled as an aid to Federal Register users. Inclusion or exclusion from this list has no legal significance.

RULES GOING INTO EFFECT NOVEMBER 2, 2006

AGRICULTURE DEPARTMENT

Agricultural Marketing Service

Vidalia onions grown in Georgia; published 10-3-06

COMMODITY FUTURES TRADING COMMISSION

Foreign futures and options transactions:

Foreign boards of trade located outside U.S.; requirement to become designated contract market or derivatives transaction execution facility; published 11-2-06

ENERGY DEPARTMENT

Federal Energy Regulatory Commission

Practice and procedure:

Critical energy infrastructure information; published 10-3-06

ENVIRONMENTAL PROTECTION AGENCY

Air quality implementation plans; approval and promulgation; various States:

Wyoming; published 11-2-06

HEALTH AND HUMAN SERVICES DEPARTMENT

Food and Drug Administration

Animal drugs, feeds, and related products:

Glycopyrrolate; published 11-2-06

TRANSPORTATION DEPARTMENT

Federal Aviation Administration

Airworthiness directives:

Airbus; published 9-28-06

BAE Systems (Operations) Ltd.; published 9-28-06

Boeing; published 9-28-06

Bombardier; published 9-28-06

Pratt & Whitney

Correction; published 10-18-06

Rolls-Royce Corp.; published 9-28-06

COMMENTS DUE NEXT WEEK

AGRICULTURE DEPARTMENT

Agricultural Marketing Service

Egg, poultry, and rabbit products; inspection and grading;

Fees and charges increase; comments due by 11-6-06; published 10-6-06 [FR E6-16528]

AGRICULTURE DEPARTMENT

Commodity Credit Corporation

Loan and purchase programs:

Sugar program; marketing of sugar derived from imported beet thick juice; comments due by 11-7-06; published 9-8-06 [FR E6-14881]

AGRICULTURE DEPARTMENT

Food and Nutrition Service

Child nutrition programs:

Women, infants, and children; special supplemental nutrition program—

Food packages; revisions; comments due by 11-6-06; published 8-7-06 [FR 06-06627]

AGRICULTURE DEPARTMENT

Forest Service

Alaska National Interest Lands Conservation Act; Title VIII implementation (subsistence priority):

Kenai Peninsula subsistence resource region; comments due by 11-9-06; published 9-27-06 [FR 06-08280]

Kenai Peninsula; subsistence resource region; comments due by 11-9-06; published 8-14-06 [FR 06-06905]

COMMERCE DEPARTMENT

Foreign-Trade Zones Board

Applications, hearings, determinations, etc.:

Florida; comments due by 11-6-06; published 8-22-06 [FR E6-13869]

Georgia

Eastman Kodak Co.; x-ray film, color paper, digital media, inkjet paper, entertainment imaging, and health imaging; Open for comments until further notice; published 7-25-06 [FR E6-11873]

COMMERCE DEPARTMENT

Industry and Security Bureau

Chemical Weapons Convention regulations:

Plant sites that produce unscheduled discrete organic chemicals; inspection status form change; records review and recordkeeping requirements; comments due by 11-6-06; published 10-6-06 [FR E6-16597]

COMMERCE DEPARTMENT

National Oceanic and Atmospheric Administration

Fishery conservation and management:

Northeastern United States fisheries—

Atlantic herring; comments due by 11-6-06; published 9-6-06 [FR E6-14662]

Meetings:

Pacific Fishery Management Council; comments due by 11-7-06; published 10-17-06 [FR E6-17241]

Ocean and coastal resource management:

Marine sanctuaries—

Flower Garden Banks National Marine Sanctuary, TX; meetings; comments due by 11-10-06; published 9-7-06 [FR 06-07481]

CONSUMER PRODUCT SAFETY COMMISSION

Consumer Product Safety Act:

Portable generators; labeling requirements; comments due by 11-7-06; published 8-24-06 [FR 06-07069]

DEFENSE DEPARTMENT

Defense Acquisition Regulations System

Acquisition regulations:

Acquisition from communist Chinese military companies; prohibition; comments due by 11-7-06; published 9-8-06 [FR E6-14895]

Tiered evaluation of offers; limitations; comments due by 11-7-06; published 9-8-06 [FR E6-14896]

ENERGY DEPARTMENT

Energy Efficiency and Renewable Energy Office

Consumer products; energy conservation program:

Residential central air conditioners and heat pumps; test procedure; comments due by 11-9-06; published 7-20-06 [FR 06-06320]

Correction; comments due by 11-9-06; published 10-10-06 [FR E6-16648]

ENVIRONMENTAL PROTECTION AGENCY

Air pollutants, hazardous; national emission standards:

Municipal solid waste landfills, amendments; comments due by 11-7-06; published 9-8-06 [FR 06-07493]

Polyvinyl chloride and copolymers production, primary and secondary copper smelting, and primary nonferrous metals (zinc, cadmium, and beryllium); comments due by 11-6-06; published 10-6-06 [FR 06-08434]

Air pollution; standards of performance for new stationary sources:

Deadline extensions for source owners and operators to conduct performance tests; comments due by 11-7-06; published 8-9-06 [FR E6-12966]

Air quality implementation plans; approval and promulgation; various States:

Maryland; comments due by 11-9-06; published 10-10-06 [FR E6-16653]

Grants and other Federal assistance:

Tribal Clean Air Act authority—

Four Corners Power Plant; Navajo Indian Reservation, NM; source-specific Federal implementation plan; comments due by 11-6-06; published 9-12-06 [FR E6-15097]

Navajo Generating Station; Navajo Indian Reservation, AZ; source-specific Federal implementation plan; comments due by 11-6-06; published 9-12-06 [FR E6-15086]

Pesticides; tolerances in food, animal feeds, and raw agricultural commodities:

Paraquat dichloride; comments due by 11-6-06; published 9-6-06 [FR E6-14642]

Propoxycarbazone; comments due by 11-6-06; published 9-6-06 [FR E6-14641]

Toxic substances:
Significant new uses—
Benzenesulfonic acid, etc.; comments due by 11-6-06; published 10-6-06 [FR E6-16574]

FEDERAL TRADE COMMISSION
Telemarketing sales rules:
Prerecorded telemarketing calls, etc.; seller and telemarketer compliance; comments due by 11-6-06; published 10-4-06 [FR 06-08524]

INTERIOR DEPARTMENT
Fish and Wildlife Service
Alaska National Interest Lands Conservation Act; Title VIII implementation (subsistence priority):
Kenai Peninsula subsistence resource region; comments due by 11-9-06; published 9-27-06 [FR 06-08280]
Kenai Peninsula; subsistence resource region; comments due by 11-9-06; published 8-14-06 [FR 06-06905]
Importation, exportation, and transportation of wildlife:
Injurious wildlife—
Silver carp and largescale silver carp; comments due by 11-6-06; published 9-5-06 [FR 06-07416]

JUSTICE DEPARTMENT
Alcohol, Tobacco, Firearms, and Explosives Bureau
Explosives:
Commerce in explosives—
Propellant actuated device; definition; comments due by 11-9-06; published 8-11-06 [FR E6-13201]

JUSTICE DEPARTMENT
Drug Enforcement Administration
Schedules of controlled substances:
Schedule II controlled substances; multiple prescriptions; comments due by 11-6-06; published 9-6-06 [FR E6-14520]

JUSTICE DEPARTMENT
Federal Bureau of Investigation
Criminal justice information systems:
Criminal history record information and fingerprint submissions; retention and exchange; comments due by 11-6-06; published 9-5-06 [FR E6-14605]

LABOR DEPARTMENT
Mine Safety and Health Administration
Mine Improvement and New Emergency Response Act; implementation:
Assessment of civil penalties; criteria and procedures; comments due by 11-9-06; published 10-26-06 [FR 06-08933]

LIBRARY OF CONGRESS
Copyright Office, Library of Congress
Copyright office and procedures:
Retransmission of digital broadcast signals pursuant to the cable statutory license; comments due by 11-6-06; published 9-20-06 [FR 06-07927]

SMALL BUSINESS ADMINISTRATION
Business loans:
Lender examination and review fees; comments due by 11-9-06; published 10-10-06 [FR E6-16750]

TRANSPORTATION DEPARTMENT
Federal Aviation Administration
Airworthiness directives:
Airbus; comments due by 11-6-06; published 9-6-06 [FR E6-14624]
BAE Systems (Operations) Ltd.; comments due by 11-6-06; published 9-6-06 [FR E6-14631]
Dassault; comments due by 11-6-06; published 10-5-06 [FR E6-16452]
Hartzell Propeller Inc.; comments due by 11-7-06; published 9-8-06 [FR E6-14691]
McDonnell Douglas; comments due by 11-6-06; published 9-20-06 [FR 06-07945]
Raytheon; comments due by 11-7-06; published 9-8-06 [FR 06-07511]
Airworthiness standards:
Special conditions—
Boeing Model 777-200 series airplanes; comments due by 11-7-06; published 10-18-06 [FR E6-17345]
Garmin International, Inc.; Raytheon Model C90A King Air airplane; comments due by 11-6-06; published 10-5-06 [FR E6-16497]

TRANSPORTATION DEPARTMENT
Federal Highway Administration
Engineering and traffic operations:
Uniform Traffic Control Devices Manual—
Traffic sign retroreflectivity; maintenance methods; comments due by 11-6-06; published 5-8-06 [FR E6-06882]

TRANSPORTATION DEPARTMENT
Pipeline and Hazardous Materials Safety Administration
Pipeline safety:
Unusually sensitive areas; protection from rural onshore hazardous liquid gathering lines and low-stress lines; comments due by 11-6-06; published 9-6-06 [FR 06-07438]
Regulatory reviews:
Regulatory Flexibility Act Section 610 and plain language reviews; comments due by 11-6-06; published 8-8-06 [FR E6-12859]

TREASURY DEPARTMENT
Internal Revenue Service
Income taxes:
Capital asset exclusion for accounts and notes receivable; comments due by 11-6-06; published 8-7-06 [FR E6-12789]
Essential governmental function definition and limitation to activities customarily performed by States and local governments; definition; comments due by 11-7-06; published 8-9-06 [FR E6-12884]

LIST OF PUBLIC LAWS

This is a continuing list of public bills from the current session of Congress which have become Federal laws. It may be used in conjunction with "P L U S" (Public Laws Update Service) on 202–741–6043. This list is also available online at *http://www.archives.gov/federal-register/laws.html*.

The text of laws is not published in the **Federal Register** but may be ordered in "slip law" (individual pamphlet) form from the Superintendent of Documents, U.S. Government Printing Office, Washington, DC 20402 (phone, 202–512–1808). The text will also be made available on the Internet from GPO Access at *http://www.gpoaccess.gov/plaws/index.html*. Some laws may not yet be available.

H.R. 6061/P.L. 109–367

Secure Fence Act of 2006 (Oct. 26, 2006; 120 Stat. 2638)

Last List October 19, 2006

Public Laws Electronic Notification Service (PENS)

PENS is a free electronic mail notification service of newly enacted public laws. To subscribe, go to *http://listserv.gsa.gov/archives/publaws-l.html*

Note: This service is strictly for E-mail notification of new laws. The text of laws is not available through this service. **PENS** cannot respond to specific inquiries sent to this address.