Issued: November 24, 2006.

Nicole R. Nason,

Administrator.

[FR Doc. 06–9554 Filed 12–13–06; 8:45 am]

BILLING CODE 4910–59–C

DEPARTMENT OF TRANSPORTATION

National Highway Traffic Safety Administration

49 CFR Part 572

Docket No. NHTSA 25442

RIN 2127–AJ16

Anthropomorphic Test Devices; SID–IIs Side Impact Crash Test Dummy 5th Percentile Adult Female

AGENCY: National Highway Traffic Safety Administration (NHTSA), Department of Transportation (DOT).

ACTION: Final rule.

SUMMARY: This final rule amends the agency's regulation on anthropomorphic test devices to add specifications and qualification requirements for the 5th percentile adult female crash test dummy, called the SID–IIs Build Level D (''SID–IIs'') test dummy. The SID–IIs dummy is instrumented in the head, thorax, abdomen and pelvis, which enables it to assess in a comprehensive manner the performance of vehicles in protecting small-stature occupants in side impacts. NHTSA plans to use the SID–IIs dummy in an upgraded Federal motor vehicle safety standard on side impact protection.

DATES: This final rule is effective June 12, 2007. The incorporation by reference of certain publications listed in the regulations is approved by the Director of the Federal Register as of June 12, 2007. If you wish to petition for reconsideration of this rule, your petition must be received by January 29 2007.

ADDRESSES: If you wish to petition for reconsideration of this rule, you should refer in your petition to the docket number of this document and submit your petition to: Administrator, Room 5220, National Highway Traffic Safety Administration, 400 Seventh Street SW., Washington, DC 20590.

The petition will be placed in the docket. Anyone is able to search the electronic form of all documents received into any of our dockets by the name of the individual submitting the comment (or signing the comment, if submitted on behalf of an association, business, labor union, etc.). You may review DOT's complete Privacy Act Statement in the **Federal Register** published on April 11, 2000 (Volume 65, Number 70; Pages 19477–78) or you may visit *http://dms.dot.gov.*

FOR FURTHER INFORMATION CONTACT: For non-legal issues, you may call Stanley Backaitis, NHTSA Office of Crashworthiness Standards (telephone 202–366–4912). For legal issues, you may call Deirdre Fujita, NHTSA Office of Chief Counsel (telephone 202–366–2992) (fax 202–366–3820). You may send mail to these officials at the National Highway Traffic Safety Administration, 400 Seventh St., SW., Washington, DC 20590.

SUPPLEMENTARY INFORMATION:

Table of Contents

I. Background
a. Need for the Dummy
b. Development of the SID–IIs
c. Development of the FRG and Build Level D Dummies
II. Response to the Comments on the FRG
III. Other Issues
a. Overview
b. How this Final Rule Differs from the NPRM
c. Description and Reference Materials
d. Biofidelity
e. Repeatability and Reproducibility (R&R)
1. Component and Sled Tests Generally
2. Repeatability and Reproducibility Assessments
3. NPRM
4. Comments on the NPRM
5. Agency Response
i. Component Qualification Tests
A. Repeatability in Component Tests
B. Reproducibility in Component Tests
ii. Sled Tests
A. Flat Wall Sled Tests at 6.0 m/s
1. Repeatability in Flat Wall Sled Tests at 6.0 m/s
2. Reproducibility in Flat Wall Sled Tests at 6.0 m/s
B. Abdominal Offset Sled Tests at MCW
C. Abdominal Offset Sled Tests at TRC
1. Repeatability in Abdominal Offset Sled Tests at TRC
2. Reproducibility in Abdominal Offset Sled Tests at TRC
iii. Conclusion
f. Pelvis of the Dummy
1. Pelvis Plug
2. Iliac Load Cell
3. Iliac Wing
g. The Shoulder with Arm Test
h. Other
1. Directional Impact Sensitivity
2. Toyota Suggests an Improved Upper Arm
3. Injury Assessment Reference Values
4. Reversibility
i. Test Dummy Drawing Package
1. Three-Dimensional (3-D) Shape Definitions
2. Material Specifications
3. Dummy Drawing Changes
IV. Qualification Procedures and Response Corridors
a. Qualification Procedures
b. Response Corridors
V. Dummy Performance in Full-Scale Vehicle Crash Tests
a. Oblique Vehicle-to-Pole Crash Tests
b. MDB Tests
c. Summary
VI. Conclusions
Rulemaking Analyses and Notices
Appendix A: Durability and Overload Analysis of the SID–IIsD Test Dummy

NHTSA published a notice of proposed rulemaking (NPRM) that proposed to upgrade Federal Motor Vehicle Safety Standard (FMVSS) No. 214, ''Side Impact Protection'' (49 CFR 571.214) by, among other things, adopting a dynamic pole test into the standard (May 17, 2004; 69 FR 27990; Docket 17694; reopening of comment period, January 12, 2005, 70 FR 2105). The proposed pole test is similar to, but more demanding than, that currently used optionally in FMVSS No. 201. In the proposed pole test, a vehicle is propelled sideways into a rigid pole at an angle of 75 degrees, at any speed up to 32 km/h (20 mph). The NPRM proposed that compliance with the pole test would be determined in two test configurations, one using a ''SID–IIs'' test dummy representing 5th percentile adult females and the other using an ''ES–2re'' test dummy representing mid-size adult males. Vehicles tested with the SID–IIs would have to comply with a head injury criterion and with thoracic and pelvic injury criteria developed for the new dummy. The agency also proposed using the dummies in FMVSS No. 214's existing moving deformable barrier (MDB) test, which simulates a vehicle-to-vehicle ''T-bone'' type intersection crash.[1]

This document establishes the specifications and qualification requirements for the SID–IIs 5th percentile adult female crash test dummy which would be used in the upgraded FMVSS No. 214. The NPRM preceding this Part 572 final rule was published on December 8, 2004 (69 FR 70947; Docket 18865; extension of comment period, March 8, 2005; 70 FR

[1] On August 10, 2005, President Bush signed the ''Safe, Accountable, Flexible, Efficient Transportation Equity Act: A Legacy for Users,'' (SAFETEA–LU), P.L. 109–59 (Aug. 10, 2005; 119 Stat. 1144), to authorize funds for Federal-aid highways, highway safety programs, and transit programs, and for other purposes. Section 10302(a) of SAFETEA–LU provides:

Sec. 10302. Side-Impact Crash Protection Rulemaking.

(a) Rulemaking.—The Secretary shall complete a rulemaking proceeding under chapter 301 of title 49, United States Code, to establish a standard designed to enhance passenger motor vehicle occupant protection, in all seating positions, in side impact crashes. The Secretary shall issue a final rule by July 1, 2008.

At the time of the enactment of § 10302(a), the agency's notice of proposed rulemaking to upgrade FMVSS No. 214 was already pending. The final rule completing the rulemaking proceeding will be issued at a future date.

11189). NHTSA published an NPRM proposing to amend 49 CFR Part 572 to add the specifications for the 50th percentile adult male ES–2re test dummy on September 15, 2004 (69 FR 55550; Docket 18864; reopening of comment period, January 12, 2005, 70 FR 2105). The SID–IIs Build Level D dummy has most of the features of the SID–II dummy proposed in the NPRM preceding this final rule, except for the floating rib guide design in the dummy's thorax. Commenters on the NPRM maintained that the floating rib guide design in the dummy's thorax was unnecessary and needlessly reduced the biofidelity and functionality of the dummy. Some commenters suggested alternative means of improving the durability of the dummy. After reviewing the comments to the NPRM and available test data, we have decided to adopt many of the proposed design features of the dummy, but not the design features that restricted vertical movement of the dummy's ribs. The resulting dummy adopted today into Part 572 is called the ''SID–IIsD'' dummy, for the SID–IIs Build Level D test dummy.

Technical reports and other materials relating to the December 8, 2004 SID–IIs NPRM have been placed in the docket for that NPRM (Docket 18865) and in the docket for the May 17, 2004 NPRM proposing the pole test upgrade to FMVSS No. 214 (Docket 17694). While technical materials discussed in today's final rule generally have been placed in the docket for today's rule (Docket 25442), occasionally an item might be found in another docket. When we refer in this preamble to technical materials, we will identify the docket where the item is filed.

In the May 17, 2004 FMVSS No. 214 NPRM, NHTSA proposed injury criteria for the SID–IIs injury measuring instrumentation of the dummy's head, thorax, and pelvis. HIC would be limited to 1000 measured in a 36 millisecond time interval (HIC_{36}). Lower spine acceleration would be limited to 82 g. For pelvic injury, the maximum of the sum of the measured acetabular and iliac force would be limited to 5,100 N. The agency did not propose in the May 17, 2004 NPRM to limit chest deflection because the agency wanted to obtain more data on the rib deflection measurement capabilities of the proposed dummy. (A technical report titled, ''Injury Criteria for Side Impact Dummies,'' discusses these proposed injury criteria. Docket 17694.)

I. Background

a. Need for the Dummy

Data from the 1990–2001 National Automotive Sampling System (NASS) and Crashworthiness Data System (CDC) show a need for a dummy that has the capability of predicting the risk of injury to a segment of small-statured vehicle occupants in side crashes. Table 1 shows the injury distribution of the estimated target population less than 65 inches (in) in stature in all types of side impact crashes between 12 and 25 mph delta V.

TABLE 1.—U.S. MOTOR VEHICLE SMALL STATURE ADULT OCCUPANT POPULATION INJURY SEVERITY DISTRIBUTION IN SIDE CRASHES

[For delta-V of 12–25 mph]

Body region	MAIS 1	MAIS 2	MAIS 3	MAIS 4	MAIS 5	Fatality	Total
Head and face	6706	1864	99	142	163	527	9049
Thorax	4377	295	1213	671	11	446	7094
Abdomen	264	86	20	112	27	96	670
Pelvis	0	0	123	0	0	6	136

The 1990–2001 NASS/CDS data also indicate that there are differences in the body region distribution of serious injuries between small and medium stature occupants in these side collisions. The data suggests that small stature occupants have a higher proportion of head, abdominal and pelvic injuries than medium stature occupants, and a lower proportion of chest injuries (Samaha et al, ''NHTSA Side Impact Research: Motivation for Upgraded Test Procedures,'' 18th ESV Conference Proceedings). Use of a small-statured dummy in side impact testing, in addition to a mid-size adult male dummy, would better represent the population at-risk in side impacts and substantially enhance protection for small adult occupants.

b. Development of the SID–IIs

The development of a small, second-generation side impact dummy was undertaken by the Occupant Safety Research Partnership (OSRP), a consortium of the U.S. Council for Automotive Research (USCAR), and dummy manufacturer First Technology Safety Systems (FTSS). (USCAR was formed in 1992 by DaimlerChrysler, Ford and General Motors as a research and development organization.) The OSRP determined that there was a need for a test dummy that would be better suited to help evaluate the performance of advanced side impact countermeasures, notably air bags, for occupants that are smaller than the 50th percentile size male. The new dummy was named the SID–IIs: ''SID'' for ''side impact dummy,'' ''II'' for second generation, and ''s'' for small.

The SID–IIs dummy was extensively tested in the late 1990s and early 2000 in vehicle crashes by Transport Canada, and to a limited extent by U.S. automobile manufacturers and suppliers, and the Insurance Institute for Highway Safety (IIHS). Continuous use of the SID–IIs dummy by various users uncovered some limitations and potential structural problems of the dummy that led to modifications of and upgrades to the dummy, resulting in OSRP's developing Build Levels A, B and C versions of the dummy. NHTSA modified the Build Level C dummy to develop a floating rib guide (''FRG'') design to address what were then NHTSA concerns about the durability of the dummy, and proposed in the December 8, 2004 NPRM to incorporate the SID–IIs with the floating rib guide design (''SID–IIsFRG'') into 49 CFR Part 572.

c. Development of the FRG and Build Level D Dummies

In response to the comments on the NPRM, this final rule adopts a version of the SID–IIs that has many of the design features of the proposed FRG dummy, but not the particular floating rib guide design that constrained the vertical motion of the dummy's ribs. This dummy is referred to as the SID–IIs Build Level D dummy.

The Build Level D dummy is an outgrowth of the SID–IIsFRG, which had originated from the Build Level C dummy. NHTSA's laboratory evaluation of the biofidelity of the SID–IIs Build Level C dummy found mechanical failures in chest displacement transducers and some ribcage and shoulder structural problems. The

agency believed that much of the problem was caused by the ribs of the Build C dummy not remaining constrained by the rib guides, which allowed their vertical motion during some impactor and sled tests. The agency was concerned the motion could affect the structural integrity of the ribs and that of the deflection potentiometers, and could also affect the accuracy of the deflection measurements. To address these concerns, the agency's Vehicle Research and Test Center (VRTC) modified the Build Level C dummy's thorax to incorporate the FRG (floating rib guide) system to prevent the compressed ribs from leaving the outside perimeter of the rib guides, and thereby prevent damage to the deflection measurement system and surrounding areas. Rib guides were used to ''float'' with the ribs as they expanded in the anterior-posterior direction during rib compression. This was intended not only to eliminate the problem of ribs' extending outside the boundaries of the rib guides, but also to retain the ribs in their initial plane and thereby prevent damage to the deflection potentiometer shaft. To further prevent damage (bending) of potentiometer shafts and damage to potentiometer housings, the rib stops were reshaped and changed from a flexible urethane material to vinyl-coated aluminum. The maximum lateral rib deflection of the dummy was also reduced from 69 mm to 60 mm to further protect the instrumentation.[2] The modified dummy was referred to as the ''SID–IIsFRG,'' the ''FRG'' indicating the addition of the floating rib guide and other modifications to the dummy.

The December 8, 2004 NPRM proposed to incorporate the SID–IIsFRG into Part 572. While NHTSA tentatively determined there was a need for the FRG modifications, the agency noted in the December 8, 2004 NPRM that there were other views as to the need for the FRG changes to the dummy (69 FR at 70954, footnote 21). The NPRM noted that Transport Canada, IIHS and the industry have used the SID–IIs Build Level C dummy to their satisfaction without the entirety of FRG modifications.

[2] The FRG design also encompassed other changes to improve the durability of the dummy. The shoulder rib guide of the dummy was reshaped and deepened beyond the front edge of the shoulder rib to keep the shoulder rib from moving vertically during its compression. The damping material of the shoulder rib assembly was made thinner and spanned the entire width of the steel band.

II. Response to the Comments on the FRG

NHTSA received comments on the December 8, 2004 NPRM from IIHS, FTSS, Autoliv, the Alliance of Automobile Manufacturers (the Alliance), Denton ATD, Advocates for Highway and Auto Safety, Toyota Motor North America, and several private individuals (Docket 18865). In addition, many entities responding to the May 17, 2004 NPRM on FMVSS No. 214 (Docket 17694) also commented on the proposal to use the SID–IIsFRG dummy.

All commenters responding to the issue of the need for the FRG design (Dockets 18865 and 17694) were strongly opposed to or were concerned about adopting the SID–IIsFRG dummy. Some commenters supported the use of an unmodified Build Level C dummy and/or a ''Build Level D'' dummy, which the commenters said would be a Build Level C dummy with many of the FRG enhancements developed by VRTC, except for the floating rib guide changes that constrain the vertical rib motion. Commenters believed that the Build Level C and Build Level D dummies were sufficiently durable for crash tests.

In opposing the SID–IIsFRG (October 14, 2004 comment to the FMVSS No. 214 NPRM (Docket 17694)), the Alliance stated that the OSRP SID–IIs Upgrade Task Group [3] had unanimously agreed to a majority of the proposed enhancements developed by NHTSA, ''which are recommended as either a running change to the Build Level C dummy or as major modifications to be incorporated into the Build Level D dummy.'' However, the Alliance emphasized, OSRP steadfastly maintained that there is no durability problem requiring the floating rib guide change to the dummy's thorax. The Alliance stated that NHTSA's Vehicle Research and Test Center (VRTC) (p. 11)—

> proposed the addition of floating rib guides to the SID–IIs dummy based on a small series of sled tests, including a single abdominal offset sled test in which the ribs were damaged and exited the original rib guides. The test was performed with an improperly positioned and improperly scaled abdominal plate that simulated a rigid armrest. This setup produced a very severe impact condition for the SID–IIs (AF05) dummy. Instead of being scaled for the AF05, the test was performed with an abdominal plate that was offset 100 mm, which are the test conditions for the ES–2 (AM50) dummy. Further, the 100 mm offset is at the extreme end of the range of armrest width in typical vehicles. In addition, the abdominal plate is rigid and therefore provided a more severe impact surface than do typically padded and deformable vehicle armrests. This test setup produced an impact condition for the AF05 dummy more severe than that of full-scale vehicle tests, since the dummy's ribs were damaged in the sled test but no rib damage occurred in the vehicle tests using the SID–IIs Version C.

[3] The Alliance stated that ''The OSRP SID–IIs Upgrade Task Group is responsible for coordinating, evaluating and approving any design modifications to the SID–IIs dummy, originally designed in 1994–95.'' *Id.*, page 8.

The Alliance further stated that the agency's concern about the accuracy of the acceleration and deflection measurements of the Build Level C dummy due to the ribs' not staying in place ''does not follow logically because it is quite normal to have the ribs deform during impact by expanding in the fore-aft dimension of the chest. The fact that they change shape and do not stay in place has nothing to do with the accuracy of the deflection measurements.''

IIHS also objected to the agency's FRG design, finding the FRG version of the SID–IIs to be ''an unacceptable and unnecessary compromise of the original dummy's biofidelity to address an unproven durability problem'' (March 4, 2005 comment to Docket 18865). IIHS stated:

> Not only have NHTSA's own vehicle crash tests failed to show any durability problems with the original dummy design, but Institute and industry experience confirms the dummy is durable enough for crash testing. As of October 2004 the Institute had conducted 48 side impact tests with the SID–IIs dummies positioned in the driver and rear outboard seating positions, for a total of 96 SID–IIs test exposures. Of these only 6 caused any damage to the dummy; in 4 tests the dummy's shoulder was damaged, and in 2 tests one of the abdominal ribs did not pass post-test verification. Similar trends are found in the Occupant Safety Research Partnership (OSRP) dataset, which includes tests conducted by DaimlerChrysler, General Motors, the Institute, and Transport Canada. Of the 241 SID–IIs test exposures (or 1,446 exposures to the dummies' individual ribs), only 21 tests (8.7 percent) caused any dummy damage; of these only 3 tests (0.3 percent of total rib exposures) exhibited any evidence of ribs catching on the vertical guides.

IIHS recommended that NHTSA adopt the SID–IIs Build Level C or the Build Level D dummy into FMVSS No. 214. IIHS stated (Docket 18865):

> Build Level D would incorporate many of the design upgrades currently in the FRG version that would improve the dummy while maintaining its high biofidelity rating. The changes IIHS supports for build level D include redesign of the shoulder rib and rib guide, neck mounting bracket, rib stops, and spine box. Using either C- or D-level SID–IIs would permit the agency to draw on the dummy's accumulated crash test experience

to incorporate rib deflection data among the FMVSS 214 requirements.

Some commenters expressed the view that the SID–IIsFRG dummy was itself not adequate for incorporation into 49 CFR Part 572. The Alliance stated that in full vehicle crash tests, there are significant differences in the shape and magnitude of the chest deflection responses of the SID–IIsFRG and the Build C dummy, with the SID–IIsFRG having ''greatly reduced'' deflections. The Alliance stated that researchers at Transport Canada and elsewhere found ''no flat-topping in the original SID–IIs, but severe flat topping in the SID–IIsFRG.'' Nissan stated (Docket 17694) that it has observed scratching of the SID–IIsFRG's rib guides created by rib contact and was concerned that this phenomenon could reduce test repeatability using the dummy over time, or may negatively affect the accuracy of the rib data.

Some commenters believed that it was more advantageous to adopt the SID–IIs Build Level C or Build Level D dummy than the SID–IIsFRG. The Alliance stated that the ISO 9790 biofidelity rating of the SID–IIsFRG is only ''fair'' (5.9), while that of the SID–IIs Build C was ''good'' (7.0). IIHS expressed serious concern that the FRG modification ''has considerably degraded'' the SID–IIs dummy's biofidelity. IIHS supported the Build Level C or D dummies in the rulemaking because it would permit the agency to incorporate rib deflection data in test requirements. IIHS stated:

> Without rib deflection limits for tests with the small dummy, the proposed side impact standard will not establish the same minimum levels of protection for vehicle occupants of various sizes. It is disappointing that part of NHTSA's reason for not including SID–IIsFRG rib deflection limits was the need to study the issue further. By favoring the FRG modified dummy the agency is ignoring the accumulated test experience with the original dummy.

Advocates expressed ''misgivings over the lack of chest deflection measurement capability for the 5th percentile SID–IIsFRG female dummy.'' Honda expressed concern that the SID–IIsFRG is not commonly used by automakers today (Docket 17694). Honda stated that, ''The use of SID–IIs [Build Level C or D] will expand because it is specified in the [industry's] voluntarily commitment on FMVSS No. 214.'' TRW said that using ''known and accepted'' test dummies could help expedite motor vehicle manufacturers' meeting their ''voluntary commitment'' to install inflatable side head protection systems (Docket 17694).

Agency response: After reviewing the comments and other information, we have decided not to adopt the entirety of the FRG design; this final rule adopts the SID–IIs Build Level D dummy (SID–IIsD) into 49 CFR Part 572 for use in FMVSS No. 214.[4] The SID–IIsD dummy has the enhancements of the SID–IIsFRG without the thorax design that prevents the compressed ribs from leaving the outside perimeter of the rib guides.

The SID–IIsFRG floating rib guide concept was developed to improve the durability of the SID–IIs dummy under extremely severe impact conditions. We have concluded that test results do not support a need for all of the floating rib guide design. The test conditions precipitating the development of the FRG were exceptionally severe and appear to be unlike vehicle crashes to which the crash dummy is exposed.

The OSRP task group and IIHS noted that the type of damage reported by NHTSA in VRTC sled tests was not experienced in their full scale vehicle crash tests. Our own testing bears this out. Since the time of the NPRM, NHTSA has used the SID–IIs (Build D) in over 24 oblique pole and MDB vehicle crash tests without seeing structural or functional problems with the dummy. In addition, the agency evaluated four SID–IIs Build D dummies in extensive component, sled, and pole and MDB vehicle crash tests without experiencing functionality and durability problems. See Appendix A to this preamble, ''Durability and Overload Analysis of the SID–IIsD Test Dummy.''

The Build D dummy has many of the enhancements of the SID–IIsFRG and some enhancements similar to FRG features, including new rib stops, larger motion ranges of potentiometers pivots, ½ inch diameter potentiometers, and enhancements to the shoulder structure. The shoulder enhancements address bending deformation (including gouging and/or delamination of the damping material) of the shoulder rib and damage to the deflection transducer. All of these enhancements have improved the structural integrity of the dummy and eliminated the need for floating rib guides.

We further believe that there are advantages to adopting the SID–IIsD dummy rather than the SID–IIsFRG beyond what is needed for the durability of the dummy. As noted by the commenters, while the FRG was very successful in containing the ribs within the rib guides and in preventing potentiometer-transducer failures, the floating rib guides added mass and additional stiffness to the ribs. As a result, the FRG became less human-like, rib deflections seriously reduced, and the shape of the deflection-time histories changed compared to testing under similar loading conditions without the FRG.[5]

IIHS uses the SID–IIs in its side impact consumer information program. IIHS noted in its comments to the NPRM that the Build Level D dummy would incorporate many of the design upgrades currently in the FRG version that would improve the dummy while maintaining the dummy's high biofidelity rating. Transport Canada plans to continue using the SID–IIs in its research program. Using the SID–IIs Build Level D dummy in FMVSS No. 214 means that the same dummy will be used in governmental and non-governmental consumer information and research programs. This consistency will enhance the testing of vehicles by making the test results from NHTSA, Transport Canada, IIHS and industry in many ways more comparable. Using the same test dummy will also more effectively focus research and design efforts on more consistent and effective countermeasures that will most successfully protect smaller stature occupants.

For the aforementioned reasons, after reviewing the comments to the May 17, 2004 (Docket 17694) and December 8, 2004 (Docket 18865) NPRMs and available test data, including the performance of the SID–IIs dummy in vehicle tests conducted with recent model year vehicles, we have decided to adopt the majority of the features of the proposed dummy, except for the floating rib guide that constrained the vertical motion of the dummy's ribs. This dummy adopted today is the SID–IIs Build Level D test dummy (''SID–IIsD'').

III. Other Issues

a. Overview

The agency received comments on the December 8, 2004 NPRM (Docket 18865) on issues other than those relating to the merits of the floating rib guide design. These included comments on: the biofidelity of the dummy; the adequacy of the agency's assessment of the repeatability and reproducibility of the dummy (Alliance and Autoliv); reported problems with the proposed pelvis plug test (the Alliance); reported sensitivity of the dummy to oblique impacts (the Alliance); the merits of the proposal to delete the shoulder with arm test

[4] A final rule adopting the Build Level D dummy into FMVSS No. 214 (49 CFR 571.214) will be published separately from this final rule.

[5] OSRP minutes dated September 18, 2004 and August 8, 2003. NHTSA Docket 25442.

(Autoliv); suggested improvements to the upper arm of the dummy (Toyota); and the injury assessment reference values that NHTSA should use in tests with the dummy. In addition, comments were received on the drawing package, qualification corridors, and other technical matters of the NPRM. These and other comments are addressed in this section III and in section IV of this preamble.

b. How This Final Rule Differs From the NPRM

In response to the comments and other information, we have reconsidered some of the tentative decisions we made in the NPRM. Notable changes are outlined below and explained in detail in this preamble. More minor changes are not highlighted here, but are discussed in the appropriate sections of this preamble.

- As discussed earlier in this preamble, we have not adopted the entirety of the ''floating rib guide'' components that were proposed, notably the floating rib guide design that restricted vertical movement of the dummy's ribs.
- At the urging of commenters, we have reviewed the proposed method of selecting and analyzing acetabulum plug characteristics needed to assure consistent and reliable acetabulum responses in compliance tests. After considering the results from a series of pendulum impact tests, we selected a 3 mm pre-crush requirement to determine the suitability of acetabulum plugs instead of the proposed 22–25 mm requirement.
- Qualification of the pelvis using the acetabulum load cell was proposed in the NPRM. This final rule includes a test of the iliac load cell to assure that the iliac load cell as mounted in the dummy is capable of repeatable and consistent response. The iliac test is similar to the acetabulum pendulum test, with the impact point centered on the iliac load cell.

c. Description and Reference Materials

Description

The following general description of the SID–IIsD is the same as that of the SID–IIsFRG provided in the NPRM. The descriptions are identical because the dummies are versions of the same.

The SID–IIsD has a mass of 44 kg (97 pounds) and a seated height of 788 millimeters (mm) (31 inches). The dummy is capable of measuring accelerations, deflections and/or forces in the head, thorax, shoulder, abdomen, lumbar spine, and pelvis body regions, as well as femurs.

The anthropometry and mass of the SID–IIsD are based on the Hybrid III 5th percentile frontal female dummy and also generally match the size and weight of a 12– to 13-year-old child. The head and neck designs are based on the Hybrid III 5th percentile female dummy. The legs are Hybrid III 5th percentile female design available also with femur load cell instrumentation.

At the same time, unlike the Hybrid III series of dummies, the SID–IIsD's torso construction is particularly oriented for assessing the potential for side impact injury. The dummy's upper torso is made up of a rigid metallic spine to which six spring steel bands lined with bonded polymer damping material are attached to simulate the impact performance of the human shoulder (1 rib), thorax (3 ribs) and abdomen (2 ribs). Linear potentiometers are attached from the ribs to the spine for compression measurements. Provisions are available for mounting tri-axial accelerometer packs to the spine at T_1 and T_{12} and at each rib.[6] Replaceable foam pads are secured directly to the ribs and a neoprene jacket covers the complete chest assembly. The upper torso accommodates the attachment of the neck at the upper end and the lumbar spine at the lower end.

A stub arm on the impacted side is attached to the lateral aspect of the shoulder through a three-axis load cell. Tri-axial accelerometer packs can also be installed at the shoulder and at the upper and lower parts of the stub arm for assessing injuries in upper extremities in side crashes.

The dummy's pelvis is a machined assembly with detachable hard urethane iliac wings at each side and covered by vinyl flesh. The pelvis design is shaped in a seated human-like posture and allows the attachment of the lumbar spine at its top and the legs at the left and right sides. The pelvis can be impacted from either side without any change in hardware. Foam crush plugs at the hip joint, which are replaced after each impact, are used to control the lateral pelvis response. The pelvis design allows the measurement of impact loads at the acetabulum and iliac wing as well as accelerations at the pelvis center of gravity (cg).

Reference Materials for the Dummy

The specifications for the SID–IIsD consist of: (a) A drawing package containing all of the technical details of the dummy; (b) an parts list; and (c) a user manual containing instructions for inspection, assembly, disassembly, use, and adjustments of dummy components. These drawings and specifications ensure that SID–IIsD dummies will be the same in their design and construction. The drawings, parts list and user manual are available for examination in the NHTSA docket for this final rule (Docket 25442). Copies of those materials may also be obtained from Leet-Melbrook, Division of New RT, 18810 Woodfield Road, Gaithersburg, Maryland, 20879, telephone (301) 670–0090.

d. Biofidelity

Biofidelity is a measure of how well a test device duplicates the responses of a human in an impact. As discussed in the NPRM, two methods are currently available for assessing the biofidelity of a dummy in side impact testing. These are: (a) An International Organization of Standardization (ISO) procedure, referred to as ISO Technical Report (TR) 9790, which determines the biofidelity of a dummy by how well the dummy's body segment and/or subsystem impact responses replicate cadaver responses in defined impact environments; and (b) a NHTSA Biofidelity Ranking System.[7] The latter method determines the dummy's biofidelity based on two assessment measures: the ability of a dummy to load a vehicle or some other type of an impact surface as a cadaver does, termed ''External Biofidelity''; and the ability of a dummy to replicate those cadaver responses that best predict injury potential, termed ''Internal Biofidelity.''

ISO Technical Report 9790 Methodology

The biofidelity requirements defined in ISO TR 9790 are based on two types of head drop tests, three types of lateral neck bending tests, four types of shoulder impact tests, six types of lateral thoracic tests, five abdominal test conditions, and thirteen lateral pelvis impact tests. The measured response values are assessed on their fit to the established cadaver response corridors.

The ISO rating system is based on a scale of 0 to 10, with 0 signifying total lack of biofidelity and 10 signifying that the body segment has a biofidelic response much like that of a human subject. Once the ratings are established for each body segment, the overall dummy's biofidelity is calculated and

[6] T_1—sensor location on the dummy's thoracic spine equivalent to the first cervical on the human thoracic spine. T_1—sensor location on the dummy's thoracic spine equivalent to the 12th cervical on the human thoracic spine.

[7] The NHTSA Biofidelity Ranking System method was reported by Heather Rhule *et al.*, in a technical paper in the 2002 Stapp Car Crash Journal, Vol. 46, p. 477, ''Development of a New Biofidelity Ranking System for Anthropomorphic Test Devices.''

its ranking determined using the following classification scale: 0 to ≤2.6 (Unacceptable); ≤2.6 to ≤4.4 (Marginal); > 4.4 to ≤6.5 (Fair); >6.5 to ≤8.6 (Good); >8.6 to ≤10 (Excellent).

The NPRM stated that the ISO methodology was used by OSRP members to evaluate the SID–IIsFRG in September 2004 (Technical Summary of OSRP–SIDIIs Upgrade,'' September 2004, Docket 18865). The SID–IIsFRG received an ISO Biofidelity rating of 5.9, which corresponds to a ''fair'' classification. Scherer et al. had rated the SID–IIs Beta prototype dummy a rating of 7.0, placing it in the ISO classification of ''good.''[8]

In the NPRM, the agency stated that a biofidelity rating of the SID–IIs and SID–IIsFRG compare favorably with other side impact dummies. The overall ES–2re[9] dummy's biofidelity rating was determined to be 4.6, while the SID (49 CFR part 572 subpart M) and EuroSID–1 dummies received ratings of 2.3 and 4.4,[10] respectively. The SID/HIII received an overall rating of 3.8 (63 FR 41468).[11]

Comments: In its comment, the Alliance provided recalculated ISO 9790 biofidelity scores for the SID–IIs Build Level C (SID–IIsC) and the SID–IIsFRG test dummies. The overall biofidelity score for the SID–IIsC dummy was 6.8 (classification of ''good''), while the SID–IIsFRG dummy had a score of 6.1 (''fair''). The commenter expressed concern, as did IIHS, that the FRG modification lowered the SID–IIsC dummy's biofidelity score.

Agency response: In the SID–IIs Upgrade Task Group draft meeting minutes for May 25, 2006, the OSRP provided calculations for the SID–IIsD and SID–IIsD $^{+}$ biofidelity ratings (Docket 25542). (This final rule SID–IIsD version is equivalent to the OSRP D^{+} version.) The SID–IIsD received an overall score of 6.0 (''fair'') and the SID–IIsD $^{+}$ a score of 6.2 (''fair''), which is comparable to the ISO 9790 rating of the SID–IIsFRG, while the overall biofidelity score for the SID–IIsC dummy was 6.8 (''good''). Table 2, below, ''Updated OSRP SID–IIs Biofidelity Ratings,'' shows the biofidelity scores for the SID–IIs C, FRG, D and D $^{+}$ dummies.

TABLE 2.—UPDATED OSRP SID–IIS BIOFIDELITY RATINGS

	ISO 9790 Biofidelity Scores for the SID–IIs (excellent >8.6 to 10; good >6.5 to 8.6; >fair >4.4 to 6.5; marginal >2.6 to 4.4; unacceptable 0 to 2.6)			
Body Segment/Build Level	''C''	FRG	''D''*	''D^{+}''**
Head Biofidelity (B1)	7.5	7.5	7.5	7.5
Neck Biofidelity (B2)	5.2	4.7	5.1	5.1
Shoulder Biofidelity (B3)	6.2	5.1	5.2	5.8
Thorax Biofidelity (B4)	7.9	6.6	5.2	6.6
Abdomen Biofidelity (B5)	7.4	6.9	7.6	7.7
Pelvis Biofidelity (B2)	5.5	5.2	5.3	4.3
Overall Biofidelity (B)	6.8	6.1	6.0	6.2

* Build Level D (BLD) by OSRP designation without VRTC upgrades for rounded shoulder rib guide.
** BLD^{+} by OSRP designation is equivalent to NHTSA designated SID–IIsD dummy with rounded shoulder rib guide.

As shown in the above table, the SID–IIsD has a very satisfactory ISO 9790 biofidelity rating. Its rating is markedly higher than that of the SID (ISO 9790 biofidelity rating of 2.3) and SID/HIII (ISO 9790 biofidelity rating of 3.8) side impact test dummies used today. Both of the latter dummies have performed well in the Federal motor vehicle safety standards, and have facilitated the installation of effective life-saving countermeasures.

NHTSA Biofidelity Ranking System

The biofidelity ranking system developed by NHTSA (Heather Rhule, et al., supra) consists of an assessment of the dummy's External Biofidelity and Internal Biofidelity. The Overall External and Internal Biofidelity ranks are an average of each of the external and internal body region ranks, respectively. A lower biofidelity rank indicates a more biofidelic dummy. A dummy with an External and/or Internal Biofidelity rank of less than 2.0 is considered to respond much like a human subject.

The NHTSA ranking system is based on a variety of cadaver and dummy exposures, such as head drop tests, thorax and shoulder pendulum tests, and whole body sled tests. The NHTSA ranking system also includes abdominal and pelvic offset sled test conditions. Each test condition is assigned a weight factor, based on a number of human subjects tested, to form a biomechanical response corridor and the relevance of the biofidelity test to the intended test environment. For each response requirement, the cumulative variance of the dummy response relative to the mean cadaver response (DCV) and the cumulative variance of the mean cadaver response relative to the mean plus one standard deviation (CCV) are calculated. The ratio of DCV/CCV expresses how well the dummy response duplicates the mean cadaver response: a smaller ratio indicating better biofidelity.

Although this method does not establish an ''absolute'' ranking scale, the ranks provide a relative sense of the ''number of standard deviations away'' the dummy's responses are from the mean human response. Rhule conducted an analysis and found that if the dummy's biofidelity ranking is below two, then the dummy is behaving similar to the human cadaver. The evaluation methodology provides a comparison of both dummy response to cadaver response as well as a comparison of two or more dummies.

The NPRM provided a comparison of external and internal biofidelities of SID–IIsFRG, the ES–2re and the SID/HIII test dummies. Data indicated that the SID–IIsFRG dummy had Overall External Biofidelity comparable to that of the ES–2re and better biofidelity than the SID/HIII dummy. At the body segment level, the SID–IIsFRG produced

[8] Scherer et al. ''SID IIs Beta+-Prototype Dummy Biomechanical Responses,'' 1998, SAE 983151.

[9] The ES–2re dummy is a 50th percentile European designed adult male side impact crash test dummy that the agency has proposed to use in the proposed upgrade of FMVSS No. 214 (69 FR 27990, *supra*).

[10] Byrnes, et al. ''ES–2 Dummy Biomechanical Responses,'' 2002, Stapp Car Crash Journal, Vol. 46, #2002–22–0014, p. 353.

[11] The biofidelity rating for the SID dummy used in FMVSS No. 214 is 2.3. The rating for the SID/HIII of 3.8, using the ISO method, reflects use of the special purpose side impact HIII head and neck as noted in 63 FR 41468, August 4, 1998.

better External Biofidelity ranks than the ES–2re in the Head/Neck, Thorax and Abdomen and worse ranks than the ES–2re in the Shoulder and Pelvis. The SID–IIsFRG produced better External Biofidelity ranks than the SID/HIII in all body regions except the Head/Neck. Based on the Overall External and Internal Biofidelity ranks, the agency tentatively concluded that the SID–IIsFRG and the ES–2re dummies were nearly equivalent and lower (better) than the SID/HIII dummy. The NPRM also noted that the SID–IIsC and the SID–IIsFRG dummy responses were substantially comparable to the mean cadaver responses and to each other. 69 FR at 70951, footnote 11.

To establish the biofidelity rankings for the SID–IIsD dummy, the agency reran some of the biofidelity tests using the SID–IIsD dummy (Heather Rhule et al., ''Biofidelity Assessment of the SID–IIs Build Level D Dummy,'' hereinafter Biofidelity Assessment report, April 2006, Docket 25442). These tests, conducted at the Medical College of Wisconsin (MCW), included:

(a) A rigid flat wall test at 6.7 m/s, one dummy, one test each—

- Flat wall (dummy's arm down);
- Pelvis lead (76 mm) with dummy's arm down;
- Abdominal lead (97 mm) with dummy's arm at 90 degrees from vertical forward;

(b) A padded wall test at 6.7 m/s, one dummy—

- Flat wall (dummy's arm down);

(c) And rigid and padded wall tests at 8.9 m/s, one dummy, one test each—

- Flat wall (dummy's arm down).

In reviewing the data from sled tests of the SID–IIs Build Level D at MCW, it was observed that the impact speed was faster than the impact speed from comparable SID–IIsFRG testing performed previously at the same lab. Because the Build Level D test results were intended to compare directly with the lower speed FRG test results, the force, displacement, and acceleration responses of the Build Level D dummy were scaled using the momentum and energy balance formulas to the delta V observed in the similar test with the FRG. The scaling factor is the ratio of the maximum delta V calculated from T12 lateral acceleration of the Build Level D and FRG dummies. NHTSA determined that the momentum equation (F*deltaT=m*deltaV) was appropriate to scale for force between two tests (F1/F2=deltaV1/deltaV2), under the assumption that the mass and deltaT are constant between the tests (i.e., the time period is the same) and the stiffness of the dummy is about the same at different deltaVs.

The actual process of scaling the Build Level D results was based on the measured change in velocity determined from the dummy's T12 lateral accelerometers. The delta velocity of the FRG dummy and the Build Level D (BLD) dummy was obtained by integrating the T12 lateral accelerometers, and the ratio of FRG to BLD delta velocity was calculated for each test. This ratio, shown in Table 3, was then used to scale results for the BLD dummy.

TABLE 3.—SCALE FACTORS USED TO CORRECT BLD DATA DUE TO INCREASED IMPACT VELOCITY

Test condition	SID–IIs dummy design	Test #	Maximum delta V calculated from T12 lateral acceleration (m/s)	FRG to BLD delta V ratio
HPF	BLD	301	13.1454	0.88806
	FRG	269	11.6739	
HRF	BLD	302	13.0473	0.93985
	FRG	270	12.2625	
LPF	BLD	292	9.60399	0.87947
	FRG	265,267	8.44641	
LRF	BLD	294	10.3005	0.9219
	FRG	268	9.49608	
LRA	BLD	303	7.848	0.8375
	FRG	275	6.5727	
LRP	BLD	296	8.95653	0.90361
	FRG	273	8.09325	

Tables 4 and 5 show the External and Internal Biofidelity ranks, respectively, for the SID–IIsFRG, SID–IIsD, SID/HIII and ES–2re dummies. The SID–IIsFRG and BLD and ES–2re ranks were calculated based primarily on sled testing at the Medical College of Wisconsin and impactor testing at VRTC and MGA. The SID–IIsFRG, SID/HIII and ES–2re biofidelity ranks have been calculated previously and presented in Docket 18865. The SID–IIsD dummy data traces and the ''standard'' response corridors are shown in Appendix A of the Biofidelity Assessment report, *id.*

External Biofidelity

Table 4 indicates that External Biofidelity of the FRG and BLD versions of the SID–IIs dummy both have similar overall ranks at 2.5 and 2.6, respectively. This biofidelity is very good, is similar to that of the ES–2re, and is better than that of the SID/HIII. The BLD External Biofidelity ranks are better than those of the SID–HIII for the shoulder, thorax, abdomen and pelvis. The head/neck biofidelity of the SID–HIII is somewhat better than the BLD, but both provide human-like responses. The BLD External Biofidelity ranks for the head/neck and thorax are better than those of the ES–2re. However, the ES–2re External Biofidelity ranks for the shoulder, abdomen and pelvis are better than those of the BLD.

TABLE 4.—EXTERNAL BIOFIDELITY RANKINGS OF SIDE IMPACT DUMMIES

	SID–IIsFRG	SID–IIsD	SID/HIII	ES–2re
Overall Rank	2.6	2.5	3.8	2.6
Head/Neck	1.8	1.8	1.0	3.7
Shoulder	2.6	2.1	5.1	1.4
Thorax	2.8	2.7	6.1	2.9

TABLE 4.—EXTERNAL BIOFIDELITY RANKINGS OF SIDE IMPACT DUMMIES—Continued

	SID–IIsFRG	SID–IIsD	SID/HIII	ES–2re
Abdomen	2.4	2.7	3.0	2.6
Pelvis	3.4	3.5	3.8	2.7

Internal Biofidelity

Internal Biofidelity of the FRG and BLD versions of the SID–IIs dummy (Table 5) have similar overall ranks at 1.5 and 1.6, respectively. As both ranks are less than 2.0, it indicates that both dummies would respond quite like cadavers when considering the instrumentation used within the dummy. Since the head design did not change between the FRG and BLD, the FRG data was used to rank the head for both the FRG and BLD, thus obtaining the exact same rank for both. The remainder of the body regions had similar ranks between the FRG and BLD, with the largest discrepancy being 0.5 in the abdomen.

The overall Internal Biofidelity of the BLD is the same as that of the ES–2re and similar to that of the SID/HIII. The BLD Internal Biofidelity ranks are better than those of the SID/HIII for the head, thorax and pelvis. Since the SID/HIII has no measurement capability in the abdomen, no rank was given. The BLD Internal Biofidelity ranks for the head and pelvis are better than those of the ES–2re. However, the ES–2re Internal Biofidelity rank for the thorax is slightly better than that of the BLD. Since the ES–2re has no measurement capability in the abdomen comparable to what can be measured in a post-mortem human subject, no rank was given.

TABLE 5.—INTERNAL BIOFIDELITY RANKINGS OF SIDE IMPACT DUMMIES

	SID–IIsFRG	SID–IIsD	SID/HIII	ES–2re
Overall Rank	1.5	1.6	1.9	1.6
Head	0.4	0.4	1.1	1.0
Thorax	1.8	2.1	2.2	1.8
Abdomen	2.0	2.5	n/a	n/a
Pelvis	1.7	1.5	2.5	2.0

Conclusion

The SID–IIsD and SID–IIsFRG Overall External and Internal Biofidelity ranks are quite similar. The SID–IIsD Overall External and Internal Biofidelity ranks are comparable to those of the ES–2re. The SID–IIsD Overall External Biofidelity rank is much better than that of the SID/HIII, but its Overall Internal Biofidelity rank is only slightly better than that of the SID/HIII.

The agency concludes that the SID–IIsD based on NHTSA Internal Biofidelity ranking of 1.6 is as humanlike, if not more so, than any other side impact dummy. Similarly, based on the ISO 9790 Biofidelity scoring methodology, the Build Level D dummy with a score of 6.2 (''fair'') has a much higher Biofidelity rating than all of the side impact dummies in current use. The agency concludes that all biofidelity indicators support the SID–IIsD dummy's suitability for use in occupant injury risk assessment in side impact crash testing.

e. Repeatability and Reproducibility (R&R)

1. Component and Sled Tests Generally

The agency's analysis of the repeatability and reproducibility [12] of the SID–IIs was based on component tests and a series of sled tests. In the tests, the impact input was carefully controlled to minimize the variability of external effects on the dummy's response. Component tests were conducted on the SID–IIs's head, neck, shoulder, thorax with arm, thorax without arm, abdomen, and pelvis acetabulum and iliac regions. In sled tests the primary measures of interest were the HIC, chest and abdomen deflections, T1, T12 and pelvis accelerations, lumbar spine and acetabulum loadings.

Component tests are better controlled than is possible in sled and vehicle tests, and thus produce more reliable estimates of the dummy's repeatability and reproducibility. Component tests are also used to qualify the dummy's performance relative to the established response corridors for each major body segment. That is, if the dummy's component is or becomes deficient, the qualification test will identify to the user that the component will not respond properly in impact tests, and that a replacement of parts should precede further testing.

Sled tests offer a method of efficiently evaluating the dummy as a complete system in an environment much like a vehicle test. The SID–IIs test dummies were positioned on a bench seat mounted to a sled. During the test, the SID–IIs dummies slid down the bench seat and impacted the rigid load wall. Sled tests established the consistency of the dummy's kinematics, its impact response as an assembly, and the integrity of the dummy's structure and instrumentation under controlled and representative crash environment test conditions.

2. Repeatability and Reproducibility Assessments

We used the Coefficient of Variation (CV) in percentage as a measure of repeatability. A CV value of less than 5 percent is considered excellent, 5–8 percent good, 8–10 percent acceptable, and above 10 percent unacceptable.[13]

Repeatability of the dummy was assessed on two levels. The agency first identified those measurements that comprise injury assessment reference values (IARVs) proposed or considered for use in the May 17, 2004 NPRM on FMVSS No. 214. The repeatability of those measurements was assessed based on the 10 percent CV limit. Second, the agency identified measurements that were not used in the proposed IARVs, but are of interest as monitored indicators of potential injuries. A CV above 10 percent value for these latter

[12] Repeatability refers to a similarity of responses of a single dummy measured under identical test conditions. Reproducibility refers to the smallness of response variability between different dummies of the same design under identical test conditions.

[13] ISO/TC22/SC12/WG5

measurements is not necessarily considered unacceptable.

The reproducibility assessment of the dummy is derived through statistical summation of data from repeatability tests of multiple dummies. Reproducibility is related more to the measurement of design quality, and manufacturing precision and consistency. Inasmuch as any dummy used for compliance purposes must conform to the performance specifications of Part 572, reproducibility is not a measure of the dummy's acceptance or exclusion from Part 572. However, if the population of dummies as a group exceeds the CV by ±15%, this would be a sign of concern that the dummy manufacturing process is flawed. The reproducibility of dummies is judged on the following qualitative scale: CV of 0–8% is ''excellent''; CV of 8–12% is ''good'', 12–15% ''acceptable''; and CV over 15% is ''poor.''

3. NPRM

The NPRM stated that two SID–IIsFRG dummies were tested and exposed to both component and sled test conditions multiple times to determine the dummy's ability to respond consistently in a human-like manner. The NPRM tentatively concluded that the two test dummies demonstrated excellent or good repeatability and reproducibility (R&R) in component and sled tests. The results of the component tests indicate ''excellent'' repeatability for the SID–IIsFRG dummy for all components except for the thorax with arm, which has a ''good'' rating. The results of the component tests generally indicated ''excellent'' to ''good'' reproducibility for the dummy for all components. The pelvis lateral acceleration was the only elevated reproducibility response at a CV of 9.1 (''acceptable''). The agency believed that some of this elevated variability was due to inconsistent force-deflection characteristics of the pelvis plug used in those dummies, which was not subjected to force-deflection limits that had been proposed in the NPRM. The results of the sled tests indicated generally excellent or good R&R results for the dummy. Instances of elevated CV for pelvis responses were thought to be due to the variability of the pelvis plug responses.

4. Comments on the NPRM

The Alliance disagreed with NHTSA's finding that the R&R of the SID–IIsFRG responses established the suitability for use in the agency side impact test programs, because only two dummies were evaluated. The Alliance argued for tests with more than two dummies in a reproducibility evaluation program, believing that R&R cannot be adequately assessed with only two dummies in one laboratory. Autoliv also was concerned that the assessment of the R&R of the dummies was based on a ''rather limited sample of dummies.''

5. Agency Response

As discussed above in this document, after considering the comments on the NPRM, NHTSA has decided to incorporate numerous SID–IIsFRG features, except for the proposed floating rib guide design, described in the NPRM into the SID–IIsD dummy. The SID–IIsD dummy has the design features that NHTSA wishes to adopt of the FRG design and not those that it has decided, after review of the comments, to be unnecessary. NHTSA also retained for the SID–IIsD essentially all of the qualification test procedures that were proposed in the NPRM for the SID–IIsFRG version, as supplemented with the shoulder test and the iliac test.

To fully assess the R&R of the SID–IIsD dummy, following the NPRM the agency evaluated four SID–IIsD dummies at two facilities. (These dummies are referred to by serial numbers 032, 033, 020 and 056.) The additional testing also addressed the concerns of the Alliance and of Autoliv about the sample size used in the previous R&R assessment. We analyzed the response data from R&R tests of these dummies, as well as data from qualification tests performed as our vehicle and sled test program progressed. The R&R and vehicle test programs yielded large amounts of response data from each impacted body area consisting of some 394 individual impact tests.[14]

The evaluation of the R&R of the SID–IIsD is described in the following technical reports (see Docket 25442): ''Repeatability and Reproducibility Analysis of the SID–IIs Build Level D Dummy in the Certification Environment,'' Jessica Gall, MGA, December 2005, and ''Repeatability, Reproducibility and Durability Evaluation of the SID–IIs Build Level D Dummy in the Sled Test Environment,'' Felicia L. McKoy et al, January 2006.

i. *Component Qualification Tests.* A. *Repeatability in Component Tests.* The initial assessment of the dummy's repeatability by component tests was performed with SID–IIsD dummies 032 and 033 upon their refurbishment with new body parts.[15] See ''Repeatability and Reproducibility Analysis of the SID–IIs Build Level D Dummy in the Certification Environment,'' *supra.*

Table 6 lists dummy responses from initial repeatability tests, consisting of five repeated sets of qualification test type impacts of dummies 032 and 033 (except for the iliac qualification test, which consisted of 5 repeated impacts each for iliacs L1 (left side) and R1 (right side) on dummy 033). (Repeated impact tests were performed on dummy 033 right iliac to determine if response differences existed between the left and right sides. Since the responses were virtually identical, the left and right side impact responses were merged.) The data are compiled and calculations made to include the following information for each repeated set: averages, standard deviations (SD), and coefficients of variation (CV). The data show that the CVs for repeatability of measurements covered by IARVs are all in the ''excellent'' range.

TABLE 6.—REPEATABILITY OF RETROFITTED SID–IIsD 032 AND 033 DUMMIES IN QUALIFICATION-TYPE TESTS

	Repeatability					
	Serial No. 032			Serial No. 033		
	Mean	SD	CV ***	Mean	SD	CV ***
Head						
Resultant Accel. (g)	n/a	n/a	n/a	n/a	n/a	n/a

[14] Listing of all responses and their statistical analysis may be found in the technical report in docket No.18865 under the title ''Development of Calibration Performance Specifications for the SID–IIsD Crash Test Dummy.''

[15] The dummies were originally SID–IIsFRG dummies. They were refurbished when they were converted to SID–IIsD dummies. Floating rib guide components constraining vertical rib movement were removed, and replaced by BLD designated parts. Worn parts were either refurbished or replaced with new ones.

TABLE 6.—REPEATABILITY OF RETROFITTED SID–IIsD 032 AND 033 DUMMIES IN QUALIFICATION-TYPE TESTS—Continued

	Repeatability					
	Serial No. 032			Serial No. 033		
	Mean	SD	CV ***	Mean	SD	CV ***
Peak X Accel (g)	n/a	n/a	n/a	n/a	n/a	n/a
Neck						
Peak D-Plane Rotation (deg)	n/a	n/a	n/a	n/a	n/a	n/a
Peak Lat. Flex Moment (N-m)	n/a	n/a	n/a	n/a	n/a	n/a
Time Moment Decay (ms)	n/a	n/a	n/a	n/a	n/a	n/a
Shoulder—Impact Speed (4.3 m/s)						
Shoulder Rib Deflection (mm)	33.5	0.09	0.26	33.6	0.27	0.89
Upper Spine Y Acceleration (G's) *	−18.4	0.23	1.27	−17.9	0.20	1.14
Thorax w. Arm—Impact Speed (6.7m/s)						
Impact Speed (m/s)	6.7	0.01	0.20	6.7	0.01	0.13
Probe Force (kN)	4.8	0.03	0.70	4.51	0.05	1.10
Shoulder Rib Deflection (mm)	37.6	0.70	1.86	39.0	0.41	1.05
Upper Thoracic Rib Deflection (mm)	29.0	0.16	0.55	30.1	0.29	0.97
Middle Thoracic Rib Deflection (mm)	33.6	0.37	1.09	33.7	0.31	0.91
Lower Thoracic Rib Deflection (mm)	34.8	0.50	1.42	35.3	0.44	1.25
Upper Spine Y Acceleration (g)	40.1	0.62	1.54	37.9	1.07	2.83
Lower Spine Y Acceleration (g)	31.6	1.40	4.41	29.3	0.72	2.47
Thorax w/o Arm—Impact Speed (4.3 m/s)						
Upper Thoracic Rib Deflection (mm)	35.8	1.04	2.90	37.6	0.68	1.81
Middle Thoracic Rib Deflection (mm)	42.3	0.58	1.36	42.5	0.58	1.37
Lower Thoracic Rib Deflection (mm)	39.3	0.62	1.58	39.8	0.71	1.79
Lower Spine Y Acceleration (g)	8.4	0.32	3.77	7.8	0.29	3.74
Abdomen—Impact Speed (4.3 m/s)						
Upper Abdominal Rib Deflection (mm)	40.6	0.48	1.18	41.8	1.41	3.37
Lower Abdominal Rib Deflection (mm)	38.2	0.78	2.03	39.3	1.35	3.44
Lower Spine Y Acceleration (g)	13.2	0.25	1.93	13.2	0.71	5.42
Acetabulum—Impact Speed (6.7 m/s)						
Pelvis Y Acceleration (g)	43.9	1.17	2.66	47.4	1.36	2.86
Acetabulum Force (kN)	3.9	0.06	1.42	3.9	0.08	2.13
Iliac—Impact Speed (4.3 m/s) **						
Pelvis Y Acceleration (g)	28.6	1.10	3.86	31.9	1.05	3.29
Iliac Force (kN)	4.0	0.09	2.34	4.4	0.15	3.48

* Second set of repeat shoulder qualification tests conducted solely to establish upper spine qualification corridors.
** Six different iliac wings and four different pelvis skins were used to formulate the statistics for these test responses using dummy 033.
*** CV=SD/Mean x 100.

B. *Reproducibility in Component Tests.* In Table 7 below, information on the reproducibility of dummies 032 and 033 under highly controlled, consecutive qualification tests are compared to the reproducibility of dummies 032, 033, 020 and 056 that were evaluated in conjunction with qualification tests performed as part of sled and vehicle tests. The reproducibility assessment was established by combining the responses of the dummies from all of the qualification tests and calculating the combined mean and the CV values for each set of tests. Data in Table 7 indicate that newly refurbished dummies 032 and 033 in repeated consecutive tests have slightly lower CV values than summation of all dummies that have been used in other crash tests. As some of the dummies have been subjected to more than 10 crash tests, this continuous use is reflected in slightly larger CVs, indicating a shift within the excellent towards the good category, and in only one instance (the lower spine acceleration value in the thorax without arm test) did the reproducibility shift into the good range.

TABLE 7.—REPRODUCIBILITY OF DUMMIES 032 AND 033 AND THE COMPOSITE OF ALL DUMMIES IN QUALIFICATION TESTS

	Serial No. 032 & 033 (newly retrofitted)			Serial No. 020, 032, 033 & 056		
	Mean	SD	CV ***	Mean	SD	CV ***
Head:						
Resultant Accel. (g)	n/a	n/a	n/a	128.2	4.32	3.37
Neck:						
Peak D-Plane Rotation (deg)	n/a	n/a	n/a	74.25	1.09	1.47
Peak Lat. Flex Moment (N-m)	n/a	n/a	n/a	42.1	1.48	3.52
Time Moment Decay (ms)	n/a	n/a	n/a	114.3	2.28	2.0
Shoulder Impact Speed (4.3 m/s)						
Shoulder Rib Defl. (mm)	33.5	0.21	0.63	33.4	1.65	4.93
Upper Spine Y Acceleration (g)	−18.2*	0.35*	1.9*	−18.2	0.32	1.77
Thorax w Arm—Impact Speed (6.7 m/s)						

TABLE 7.—REPRODUCIBILITY OF DUMMIES 032 AND 033 AND THE COMPOSITE OF ALL DUMMIES IN QUALIFICATION TESTS—Continued

	Serial No. 032 & 033 (newly retrofitted)			Serial No. 020, 032, 033 & 056		
	Mean	SD	CV ***	Mean	SD	CV ***
Shoulder Rib Deflect (mm)	38.3	0.92	2.41	35.6	2.74	7.70
Upper Rib Defl. (mm)	29.6	0.60	2.04	28.5	1.40	4.92
Middle Rib Defl. (mm)	33.7	0.32	0.96	32.5	1.21	3.73
Lower Rib Defl. (mm)	35.0	0.51	1.46	34.6	1.10	3.17
Lower Spine Accel. (g)	30.5	1.61	5.27	31.7	1.69	5.34
Thorax w/o Arm—Impact Speed (4.3 m/s)						
Upper Rib Deflect. (mm)	36.7	1.25	3.41	36.3	1.77	4.86
Middle Rib Deflect. (mm)	42.4	0.56	1.32	41.6	1.01	2.43
Lower Rib Deflect. (mm)	39.6	0.70	1.76	39.4	1.61	4.08
Lower Spine Accel. (g)	8.1	0.42	5.23	8.7	0.73	8.42
Abdomen—Impact Speed (4.3 m/s)						
Upper Rib Defl. (mm)	41.2	1.16	2.82	42.8	2.06	4.81
Lower Rib Defl. (mm)	38.7	1.19	3.07	42.5	3.24	7.62
Lower Spine Accel. (g)	13.2	0.50	3.84	12.58	0.71	5.68
Acetabulum—Impact Speed (6.7 m/s)						
Pelvis Lateral Accel. (g)	45.6	2.12	4.64	45.7	2.20	4.81
Acetabulum Force (kN)	3.9	0.07	1.67	4.02	0.16	3.89
Iliac—Impact Speed (4.3 m/s) **						
Peak Lateral Accel. (g)	30.0	2.01	6.70	29.6	1.73	5.86
Iliac Force (kN)	4.2	0.21	4.91	4.1	0.20	4.99

† New plug used for each test.
* Second set of repeat shoulder qualification tests conducted solely to establish upper spine qualification corridors.
** Six different iliac wings and four different pelvis skins were used to formulate the statistics for these test responses using dummy 033.
*** CV = SD/Mean × 100.

ii. *Sled Tests.* Sled tests of the SID–IIsD dummies were conducted to determine the repeatability and consistency of the dummy's impact response in an environment more similar to full vehicle crash tests than qualification-type tests. See, ''Repeatability, Reproducibility and Durability Evaluation of the SID–IIs Build Level D Dummy in the Sled Test Environment,'' *supra.*

The performance of each of the SID–IIsD dummies was evaluated in five repeated tests at 6.0 m/s. At the Medical College of Wisconsin, dummies 032 and 033 were tested in a deceleration sled. They impacted laterally a ''Heidelberg'' type three segment flat rigid wall with and without an armrest attached to it. In tests at the Transportation Research Center (TRC), test dummies 020 and 056 were placed in the HYGE sled to impact laterally a flat rigid wall with an armrest attached to it.

The SID–IIsD was evaluated using the test configurations to which the SID–IIsFRG was exposed (69 FR at 70952). The tests involved: (a) The dummy impacting a flat wall at 6.0 m/s with the lateral aspect of its torso, pelvis and lower extremities, with the dummy's arm oriented in the down position (lowest detent); and (b) tests conducted at 6.0 m/s with an abdomen offset block on the load wall, with the dummy's arm oriented 90 degrees forward to the inferior superior axis of the torso. The abdomen offset test provides a test environment with severe loading of the abdominal region.

A. *Flat Wall Sled Tests at 6.0 m/s.* Table 8 provides a summary of the responses of dummies 032 and 033 in flat wall tests at 6 m/s. The data is presented by the mean, standard deviation and percent CV for the responses of 5 sled tests for each dummy (repeatability) as well as their composite responses (reproducibility).

TABLE 8.—REPEATABILITY AND REPRODUCIBILITY OF SID–IIsD 032 AND 033 DUMMIES IN FLAT WALL SLED TESTS

	Repeatability						Reproducibility		
	Serial No. 032			Serial No. 033			Serial No. 032 & 033		
	Mean	SD	CV *	Mean	SD	CV *	Mean	SD	CV *
HIC	62.0	5.0	8.0	67.9	4.6	6.8	64.9	5.6	8.7
T1 acceleration	42.7	0.6	1.3	42.3	2.0	4.7	42.5	1.5	3.5
Shoulder Rib Defl. (mm)	41.4	1.9	4.5	41.3	0.8	2.0	41.4	1.5	3.5
Upper Rib Defl. (mm)	32.8	1.6	4.9	36.5	0.7	2.0	34.7	2.2	6.4
Middle Rib Defl. (mm)	37.0	2.0	5.3	40.3	0.7	1.7	38.7	2.2	5.8
Lower Rib Defl. (mm)	38.7	2.5	6.5	44.2	0.8	1.9	41.4	3.3	8.0
T12 acceleration	59.1	2.8	4.7	57.9	2.7	4.6	58.5	2.8	4.8
Abd.Upper Rib Defl. (mm)	29.6	3.4	11.5	39.5	0.9	2.2	34.6	5.5	16.0
Abd.Lower Rib Defl. (mm)	14.9	0.5	3.4	16.8	0.8	4.5	15.6	1.1	7.1
Pelvis Lateral Accel. (g)	68.0	4.2	6.2	71.1	8.8	12.3	69.5	7.1	10.2
Acetabulum Force (kN)	3.89	0.185	4.8	3.9	0.039	1.0	3.89	1.34	3.4

TABLE 8.—REPEATABILITY AND REPRODUCIBILITY OF SID–IIsD 032 AND 033 DUMMIES IN FLAT WALL SLED TESTS—Continued

	Repeatability						Reproducibility		
	Serial No. 032			Serial No. 033			Serial No. 032 & 033		
	Mean	SD	CV*	Mean	SD	CV*	Mean	SD	CV*
Iliac Force (kN)	−0.28	0.001	4.4	−0.26	0.002	7.0	−0.27	0.002	6.7

*CV = SD/Mean × 100.

1. *Repeatability in Flat Wall Sled Tests at 6.0 m/s.* The data in Table 8 for each of the dummies indicate excellent and good CV's for repeatability for all IARV-based measurements. For non-IARV measurements, the repeatability for most measurements is also good to excellent, with only a few exceptions. For dummy 033, the pelvis lateral (Y) and resultant accelerations have CVs of 12.3 and 12.4, respectively. For dummy 032, the abdomen rib #1 displacement has a CV of 11.5. The above test results indicate that the dummy is capable of providing excellent and good repeatable measurements in flat wall rigid surface impact environment.

2. *Reproducibility in Flat Wall Sled Tests at 6.0 m/s.* The data presented in Table 8 shows the reproducibility of the two dummies for IARV measures are at the excellent level. For non-IARV measurements, the reproducibility for pelvis lateral acceleration at 10.2 is considered good, and at 16.0 the upper abdominal rib deflection is just outside the satisfactory range at the poor level.

B. *Abdominal Offset Sled Tests at MCW.* The abdominal offset test set-up with simulated armrest was the same as in 6.0 m/s flat wall tests, except that the barrier had a wooden armrest attached to the impact surface, and the dummy's arm was oriented 90 degrees forward of torso superior-inferior axis. The simulated wooden armrest was 58 mm deep, 76 mm wide, 250 mm long. Dummies 032 and 033 were employed at MCW for these tests.

During the repeatability assessment of dummies 032 and 033 at MCW, several body segments showed CV measures that were not rated as either good or excellent repeatability. A thorough video review was conducted on the kinematics of the dummies and their interaction with the armrest and impact wall. The review of the crash event indicated that early armrest contact of the abdomen caused the dummies' upper torso to start leaning somewhat towards the barrier. During this process, the shoulder rib of the dummy interfaced with and became ''snagged'' by the upper edge of the thoracic force plate, causing the shoulder to dwell in the hung-up position for several milliseconds. The snagging was particularly evident in tests SD320 and SD322, in which the shoulder force went into tension after 70 ms. The snagging interaction also changed the profile of the shoulder loading curve of these two tests compared to the other three tests in the series. Inasmuch as the rest of the tests also indicated the effects of snagging, though to a lesser extent, it was decided to redo the test series with a higher load cell wall using the HYGE sled at TRC.

C. *Abdominal Offset Sled Tests at TRC.* In view of the experience with shoulder snagging at MCW, the agency repeated the armrest test series at TRC with newly refurbished dummies 020 and 056 in the HYGE sled. The test set-up was the same as at MCW except that the upper edge of the barrier thoracic loading plate was set approximately 2.5 in above the shoulder pivot.

Table 9 provides a summary of peak responses of dummies 020 and 056 in the TRC sled test series with simulated arm rest.

TABLE 9.—REPEATABILITY AND REPRODUCIBILITY OF SID–IIsD 020 AND 056 DUMMIES IN FLAT WALL SLED TESTS WITH SIMULATED ARMREST

	Repeatability						Reproducibility		
	Serial No. 020			Serial No. 056			Serial No. 020 & 056		
	Mean	SD	CV*	Mean	SD	CV*	Mean	SD	CV*
HIC	80.7	1.4	1.7	81.3	2.8	3.4	81.0	2.2	2.7
T1 acceleration	59.2	5.7	9.7	53.4	5.6	10.5	56.3	6.4	11.3
Shoulder Rib Defl. (mm)	49.1	0.5	1.0	53.2	0.8	1.5	51.2	2.1	4.2
Upper Rib Defl. (mm)	26.4	0.7	2.6	24.7	0.4	1.7	25.6	1.0	4.0
Middle Rib Defl. (mm)	11.7	0.2	1.6	11.5	0.3	2.4	11.6	0.3	2.2
Lower Rib Defl. (mm)	12.6	0.4	3.0	12.7	0.3	2.3	12.7	0.3	2.7
T12 acceleration	38.3	1.7	4.3	37.5	1.7	4.4	37.9	1.7	4.5
Abd. Upper Rib Defl. (mm)	49.6	0.2	0.4	49.1	0.2	0.4	49.3	0.3	0.7
Abd. Lower Rib Defl. (mm)	48.2	0.9	1.8	45.7	0.4	0.8	47.0	1.4	3.0
Pelvis Lateral Accel. (g)	72.5	0.6	0.8	65.1	0.9	1.4	68.8	3.8	5.5
Acetabulum Force (kN)	3.44	0.03	0.9	3.36	0.05	1.5	3.40	0.55	1.6
Iliac Force (kN)	−0.32	0.005	1.8	−0.29	0.005	1.6	−0.30	0.016	5.3

*CV = SD/Mean × 100.

1. *Repeatability in Abdominal Offset Sled Tests at TRC.* Repeatability of the responses for IARV assessment in sled tests of dummies 020 and 056, as shown in Table 9, were all excellent, except that the T1 acceleration of dummy 20

had a CV at 9.7 and a CV of 10.5 for dummy 56 which is borderline acceptable.

The good to excellent CVs in repeatability tests of the dummies conducted at TRC illustrate that the arm snagging by the upper top edge of the barrier was the cause of poor dummy repeatability at MCW and that the dummy itself might not be the source of the problem.

2. *Reproducibility in Abdominal Offset Sled Tests at TRC.* To assess the reproducibility of dummies in sled tests, the repeatability responses of common measurements for both dummies were pooled for the calculation of mean response values, standard deviations and their respective CVs. Similar to flat wall sled tests, data in Table 9 indicate that armrest tests on the whole have shifted somewhat towards wider variability from their individual repeatability values. The addition of the armrest however, has not altered the reproducibility levels of the dummy responses. All pertinent IARV values are well within excellent reproducibility range.

iii. *Conclusion.* To enhance the quality and the quantity of available data, the agency evaluated four SID–IIsD dummies at two facilities. The response data from the dummies in sequentially repeated component tests indicated the repeatability and reproducibility of the dummy's impact responses to be excellent to good. Continued qualification tests of the four SID–IIsD dummies during their extensive use in sled and vehicle crash tests produced somewhat higher levels of response variability in component tests, but not enough to shift them out of excellent and good repeatability and reproducibility ranges. Nearly all of the dummy responses corresponding to IARVs injury assessment values fell into good to excellent repeatability categories. In addition, we found reasonably good match and overlap of dummy responses and respective coefficient of variation (CV) values between NHTSA SID–IIsD and a much larger SID–IIsC dummy population reported by FTSS in docket comments (''Development of Calibration Performance Specifications for the SID–IIsD Crash Test Dummy,'' *supra*). This finding of a good match confirms that the upgrades to bring the SID–IIsFRG to the SID–IIsD level have not affected either the response or the repeatability of the dummy.

The SID–IIsD dummies were evaluated for repeatability and reproducibility in a variety of sled tests. The SID–IIs dummies showed the repeatability and reproducibility of the dummy's responses to be excellent to good for the relevant injury assessment measurements under consideration for use in FMVSS No. 214, as proposed at 69 FR 27990. For the reasons provided above, the agency concludes that the SID–IIsD dummy is a suitable, reliable and consistent dummy to warrant incorporation into 49 CFR Part 572 and FMVSS No. 214.

f. Pelvis of the Dummy

The agency noted in the NPRM that it was concerned about the repeatability of the data obtained in tests of the SID–IIs's pelvis (69 FR at 70592). As discussed in the NPRM, during the agency's evaluation of the R&R of the dummy, NHTSA observed that some of the data traces of the dummy's pelvis acceleration showed an inconsistent first peak in the data trace that was generated by the probe's impact.[16] NHTSA believed that the inconsistency of the first peak acceleration response could partly be attributed to an absence of control over aspects of the dummy that affect the consistency of the pelvis responses. To improve the consistency of the pelvis responses, the NPRM included provisions that provide checks on the performance of various parts of the dummy's pelvis.

1. Pelvis Plug

In the pelvis qualification test developed by dummy manufacturer FTSS, the pendulum impact probe is centered on the pelvis plug that is mounted within the pelvis flesh cavity in front of and in line with the acetabulum load cell's longitudinal axis at the H-point of the dummy. Because there was practically no control over the stiffness characteristics of the SID–IIs plugs, the agency believed that inconsistency of the first peak acceleration response was caused by variability of the crush characteristics of the pelvis plugs (*i.e.*, variability of the resistance force during compression) rather than by other characteristics of the dummy (69 FR at 70953). Thus, to improve the consistency of all of the dummy's pelvis responses as well as the force values measured by the impact probe, the agency proposed to control the crush characteristics of the pelvis plug.

NHTSA developed a force-displacement corridor for the pelvis plug and a test procedure for measuring the force-displacement characteristics of the plugs. The proposed procedure involved evaluating a plug by quasi-statically compressing it to a deflection range between a proposed range of 22 to 25 mm and a corresponding resistance force between 1920 and 2160 Newtons (N) at minimum compression and 2000 to 2240 N at maximum compression. Under the proposed procedure, only plugs that met the specified force levels at prescribed compression would be ''certified'' for use in a side impact test using the dummy.[17]

Comments Received: The Alliance believed that the 22–25 mm deflection range was excessive. The commenter stated that FTSS conducted ''numerous tests to understand the effects of different amounts of pre-crush on the pelvis plug and has tentatively determined that a 2 mm pre-crush provides the greatest consistency for the quasi-static force deflection performance of the pelvis plug.'' FTSS in its comments noted that it has evaluated SID–IIs dummies with a variety of plugs having different pre-crushes. It observed ''that the plug properties change after each test if the quasi-static compression is higher than 3 mm. With 25 mm of compression the plug properties change significantly, which stiffens the pelvis response as well''. FTSS further stated that studies of plugs pre-crushed to a number of depth levels show that ''* * *the plug properties have no noticeable change with a 2 mm compression specification. The 2 mm compression can be repeated without damaging the plug. The tests can also distinguish between plugs with different stiffness.''

Agency Response. Adopting a force-displacement corridor for the pelvis plug and the proposed test procedure to control the crush characteristics of the pelvis plug are warranted to improve the consistency of the dummy's pelvis responses. However, upon review of the Alliance and FTSS comments, the agency evaluated the effects on pelvis response by plugs of several pre-crush depths. We have determined that a 22–25 mm crush specification is too high and does stiffen the pelvis response excessively. We have also determined

[16] ''Summary of the NHTSA Evaluation of the SID–IIsFRG Side Impact Crash Test Dummy Including Assessment of Durability, Biofidelity, Repeatability, Reproducibility and Directional Sensitivity'' (November 2004), Docket 18865.

[17] A pelvis plug can only be used once per either vehicle crash test or pelvis qualification application. In the pelvis qualification test procedure under consideration, a certified plug is inserted into the pelvis cavity of the dummy and the dummy's pelvis is qualified according to the Part 572 test procedure. Since the pelvis plug can only be used once, after the dummy's pelvis is qualified, the plug must be discarded and a new ''certified'' plug is inserted into the pelvis cavity prior to the vehicle crash test. The agency stated in the NPRM that it believed that ''Carefully controlled and certified crush characteristics of the plugs will assure that their use will produce consistent and reliable pelvis response in the impact environment.'' *Id.*

that a nominal 3 mm pre-crush procedure would more assuredly sort out differences between plugs having different crush properties than a 2 mm pre-crush procedure. Accordingly, we selected a compression force requirement that pelvis plugs must exhibit when pre-crushed to a depth of 2.5–3.5 mm. The pelvis plug crush development is discussed in the technical report entitled, ''SID–II Pelvis Plug Certification Development,'' Alena Hagedorn and Heather Rhule, May 3, 2006, Docket 25442. The pre-crush procedure and certification requirements are set forth in the plug drawing 180–4450.

2. Iliac Load Cell

Along with specifying proposed stiffness characteristics for the pelvis plug to improve consistency in the pelvis responses, the December 8, 2004 NPRM proposed performance limits on the peak acceleration of the pelvis and the peak force responses of the acetabulum and iliac load cells when subjected to the proposed pelvis qualification test. However, in that test, the impact probe contacts an area of the dummy covering just a small part of the iliac load cell, resulting in a minimal force on the iliac load cell.[18] (See ''SID–IIs Iliac Certification Development,'' Alena V. Hagedorn, August 2006, Docket 25442.) A question arose as to whether the qualification procedure for the pelvis should more fully assess the properties of the iliac load cell. The Alliance noted in its comment to the NPRM (Docket 18865–35) that there could be higher loads from the iliac load cell than the acetabulum load cell, and suggested that the qualification test should limit both the iliac and acetabulum loads. We too observed that in agency pole and MDB side crash tests, impacts into the iliac area were occurring quite frequently and at magnitudes sometimes equaling and sometimes exceeding the loadings imparted to the acetabulum. Because the May 17, 2004 NPRM on FMVSS No. 214 proposed that the *sum* of the acetabular and iliac forces would be used for the pelvic injury criterion, it appeared prudent to have a procedure that checks the response consistency of the iliac load cell as installed in the dummy's pelvis.

Agency Response. After considering the comments and other information, the agency has decided that the proposed pelvis qualification test should continue to measure the properties of the acetabulum load cell, and should also have a comparable procedure that involves impacting the iliac region for assessing the properties and repeatability of the iliac load cell response. The pelvis test will consist of the acetabulum impact test, and an impact test conducted on the iliac load cell area of the pelvis as well (see ''SID–IIs Iliac Certification Development,'' *id.*). In the iliac load cell test, a 13.97 kg impactor is accelerated to 4.3±0.1 meters per second (m/s) and directed laterally into the pelvis such that its impact surface strikes the centerline of the iliac access hole in the iliac load cell. Performance limits are adopted for peak impactor and pelvis lateral accelerations and peak iliac forces. In addition, the procedure calls for use of a thin steel plate between the iliac wing and iliac load cell to prevent the iliac wing urethane material from deforming and offloading a portion of the iliac load cell measurement, which can affect the repeatability of test results. *Id.* The iliac test procedure will ensure the validity and repeatability of the data produced by the iliac load cell and the pelvic responses of the dummy.

3. Iliac Wing

During the course of NHTSA's R&R evaluation of the SID–IIsD, the agency observed that our SID–IIs set of left side wings had been used extensively for several years in numerous crash exposures, and was showing signs of wear. The agency decided to obtain six new iliac wings from the dummy manufacturer producing the dummies at the time (FTSS) for iliac R&R tests. During quasi-static and dynamic impact tests of the six new iliac wings, it was observed that the wings produced approximately 20% lower impact responses (softer) than previously-tested wings. NHTSA contacted FTSS and was informed that formulation of the urethane materials for currently-manufactured wings changed in 2004, as the material previously used was no longer available. (Agency memorandum, June 1, 2006, Docket 18865, number 18865–36.)

All agency vehicle and sled testing of the SID–IIs dummies was done with pelves equipped with pre-2004 iliac wings. We estimate[19] that in crash tests the softer iliac wings would lower the average driver occupant pelvis force approximately 8% and that of the passenger about 3%. In only one of 25 dummy occupants responses reviewed would the pelvis IARV change from just being above the IARV limit to just being below. In view of these findings, the agency decided to specify the softer iliac wing for the SID–IIsD dummy. Accordingly, all of the pendulum response data have been revised to reflect the softer iliac wings.

g. The Shoulder With Arm Test

Although a shoulder qualification test in which the dummy's shoulder has to meet deflection and acceleration limits was described in the FTSS user manual for the SID–IIs dummy, the agency tentatively concluded that the qualification test was redundant to a thorax with arm test and was thus unnecessary. The agency made this tentative determination because both the shoulder with arm test and the thorax with arm test produced identical shoulder response values in our evaluation of the dummy.

Comments on the NPRM: Both Autoliv and the Alliance urged the agency to adopt the separate shoulder qualification test developed by FTSS. The commenters believed that the shoulder test provides needed data specifically about the shoulder rib performance, and that it can influence dummy kinematics in full scale crash tests.

Agency Response: We agree with the commenters that the shoulder with arm test has merit, and that it should be included in today's regulation. The thorax with arm test is conducted with the dummy's arm in the ''down'' position, with the impact probe contacting the dummy 93 mm below the centerline of the shoulder yoke assembly arm pivot (measured along the length of the arm). The shoulder with arm test is conducted with the arm positioned so that it points forward at 90 degrees relative to the centerline of the dummy's thorax, with the pendulum impact probe impacting the centerline of the rubber shoulder plug.

The shoulder with arm test is needed to assess properly the performance of the dummy's shoulder. In the agency's pole and MDB tests, we observed that the shoulder of the small female dummy was one of the first body segments to contact the vehicle structure. Because of this, we believe that the response of the shoulder has implications on subsequent dummy kinematics and impact responses and should thus be evaluated in a separate qualification test. To assure that the shoulder impact response is not influenced by the arm's interaction with parts of the torso, the

[18] The NPRM proposed in § 572.197(c)(4) that the peak iliac wing force (load cell) response would have to be not less than 524 N and not more than 730 N. Because the impact probe in the proposed procedure barely exercised the iliac load cell, the proposed iliac load cell loads were much less than the proposed acetabulum loads.

[19] Based on calculated adjustments of the total force on the pelvis by taking into account lower impact responses of the softer iliac wing.

test procedure requires the arm of the dummy to be in the raised position.

Accordingly, this final rule includes a separate shoulder with arm test. The test specifies that the shoulder is impacted with a 14 kg, 120.7 mm diameter probe at 4.4 m/s. The impact probe experiences a maximum deceleration of not less than 14 g and not more than 18 g, and the concurrent shoulder deflection is between 30–37 mm. Peak lateral acceleration of the upper spine (T1) is not less than 17 g and not more than 19 g.

h. Other

1. Directional Impact Sensitivity

The NPRM stated that limited NHTSA tests indicated that the SID–IIsFRG dummy's thoracic and abdominal rib deflections were reduced in +30 and +15 degree pendulum tests, as compared to deflections resulting from pure lateral pendulum impacts. Also, the SID–IIsFRG's peak lateral acceleration of the upper and lower spines in oblique pendulum impacts showed, as compared to non-oblique lateral impacts, elevated ratios (compared to non-oblique) of the upper spine in abdominal impact at +15 degrees (1.27), and higher ratios of lower spine (3.22) and upper spine (2.20) accelerations in +30 degree impacts. The agency explained, however, that the loading of the dummy in the pendulum tests is unlike the loading experienced in a vehicle crash test. The agency tentatively concluded that, while the dummy demonstrated some sensitivity to impact direction in the pendulum tests, this demonstration has not been established as being relevant to loading conditions in vehicle tests.

Comments on NPRM: The Alliance said it believed that laboratory pendulum tests show that the SID–IIs dummies ''exhibit sensitivity to impact direction that can adversely affect the ability of the dummy to accurately measure deflection* * *. As the impact angle increases, the peak rib deflection decreases.'' The commenter believed that in single rib oblique angle pendulum tests, the Build Level C rib was able to deflect more freely than the FRG rib, but this caused the potentiometer shaft to be oriented off axis to the housing, which resulted in the shaft scraping along the inside of the housing causing noise in the data response. The commenter believed that based on these data, it would be premature to require thoracic injury criteria (deflection and acceleration) in oblique loading conditions for the SID–IIsFRG.

Agency Response: With regard to comments pertaining to the effect of the floating rib guides on the SID–IIs's deflection measurement capabilities, this final rule does not adopt the guide mechanism. With regard to comments opposed to the use of SID–IIs dummies in oblique impacts to measure rib deflection, NHTSA wanted to obtain more information on the SID–IIsFRG's rib deflection measurement capability under oblique loading conditions before proceeding with a proposal limiting rib deflections in oblique side impact tests (69 FR at 28006). We did not propose to use rib deflections in FMVSS No. 214, and the final rule on adopting the pole test into FMVSS No. 214 will not include an injury assessment reference value limiting the rib deflection of the SID–IIsD.

However, we do not agree with the comments opposing use of the dummy's chest acceleration measurements in oblique impacts. In our vehicle pole and MDB test program using the SID–IIsD, we did not observe ''noise'' in the data responses caused by the potentiometer shaft scraping along the inside of the housing or by any other factor. The SID–IIsD's acceleration responses in vehicle crash tests appeared to be fully satisfactory (see Section V of this preamble, ''NHTSA Crash Test Experience,'' *infra*), as were the deflection responses.

We also do not believe that the SID–IIsD's response characteristics in the oblique pendulum tests demonstrate that the dummy is unsuitable for assessing the risk of thoracic injury in oblique vehicle tests. The two test environments are very different. The pendulum has a small and rigid impact face and a relatively small mass that is intended to load a specific localized region of the dummy. In contrast, in a vehicle crash test, an intruding vehicle structure loads the dummy in multiple areas during a collision. The intruding area is usually fairly large, is typically energy absorbing, changes its configuration, and changes its direction of impact force during the crash. No commenter provided vehicle crash test data showing consistent increases or decreases in the dummy responses due to oblique loading. Further, as noted in the NPRM, the directional sensitivity of the dummy in ± 15 degree impacts appears at most comparable to or less than those of other side impact dummies. The agency's 49 CFR part 572, subpart F SID dummy has been successfully used in FMVSS No. 214's oblique MDB impact since 1990.

2. Toyota Suggests an Improved Upper Arm

Toyota stated in its comments that the current SID–IIs upper arm is not biofidelic and that it negatively affects the thoracic rib responses. Toyota stated that the SID–IIs upper arm is stiffer, smaller and lighter than the human arm. The commenter believed that the arm increases deflection responses of the upper and middle thoracic ribs. Toyota stated that it has developed a biofidelic upper arm, which was used in Insurance Institute for Highway Safety (IIHS) 50 km/h side impact tests. According to Toyota, when compared to the results measured by the current SID–IIs arm, the upper rib deflection for the driver was reduced by 4.3 mm. Toyota claims that the reductions are even more pronounced for the rear passenger, showing upper and middle thoracic rib deflections lowered by 13.5 mm and 7.6 mm, respectively, as well as a decrease in upper rib acceleration. Toyota noted that the modified arm resulted in a slight decrease in shoulder biofidelity, but overall whole dummy biofidelity was improved from 6.24 to 6.35. Toyota believed that the biofidelity rating of the SID–IIs prototype with the modified arm would maintain an overall rating of ''fair.''

Agency Response: Toyota has not established the need for or usefulness of the new arm as it relates to the FMVSS No. 214 rulemaking underway or generally to the prediction of the risks of occupant injury. We do not believe that this rulemaking should be delayed to ascertain the improvements to the SID–IIs's arm. The OSRP is compiling data on the Toyota proposed arm modifications and will be examining their effect on the biofidelity and usefulness of the dummy. Meanwhile, NHTSA believes that the current arm of the dummy is acceptable. The agency is satisfied with the biofidelity of the current SID–IIs arm and will proceed with this rulemaking to adopt the Build Level D dummy into part 572.

3. Injury Assessment Reference Values

In the May 17, 2004 NPRM on FMVSS No. 214, NHTSA proposed the following injury assessment reference values (IARVs) for use with the SID–IIs: HIC_{36} would be limited to 1000; lower spine lateral acceleration would be limited to 82 g; and the sum of the measured acetabular and iliac force would be limited to 5,100 N. The agency did not propose in the May 17, 2004 NPRM to limit chest deflection because the agency wanted to obtain more data on the rib deflection measurement capabilities of the dummy.

Comments Received: The agency received comments on the IARVs in response to both the May 17, 2004 NPRM (Docket 17694) and the December 8, 2004 NPRM (Docket 18865). Comments on the proposals in the FMVSS No. 214 rulemaking on the IARVs used with the SID–IIs will be addressed in that rulemaking proceeding rather than in today's final rule. (These comments include, for example, whether FMVSS No. 214 should limit lower spine (T12) acceleration of the SID–IIs.) Comments relating to the ability of the dummy to measure the relevant injury assessment values accurately and with acceptable repeatability and reproducibility have been addressed in this final rule. All tests conducted and/or analyzed to support the incorporation of the SID–IIsD dummy into Part 572 have shown reliable and repeatable responses suitable for the qualification testing required.

4. Reversibility

The NPRM explained that the SID–IIs is designed to have equivalent performance when impacted from either the left or right side. Most agency tests have been left side impacts. To convert the dummy's impact side from left to right side and vice versa, the entire dummy's thorax, abdomen, and shoulder structure, upon disengagement of the neck and of the lumbar spine at the lower torso interfaces, is rotated as a unit around the vertical axis with respect to the neck and the lumbar spine without any further modifications.

No comments were received on the reversibility of the dummy. The agency has determined that the dummy is appropriate for use for both right and left side impacts. The method for reversing the dummy for use in either left-or right-side impacts is discussed in the Procedures for Assembly, Disassembly and Inspection (PADI) document for the SID–IIsD dummy.

i. Test Dummy Drawing Package

The SID–IIs test dummy is specified by way of a drawing package, parts list, PADI users manual, and performance qualification tests. The two-dimensional drawings and the PADI ensure that the dummies are the same in their design and construction. The performance qualification tests serve to establish the uniformity of dummy assembly, structural integrity, consistency of impact response and adequacy of instrumentation. The repeatability of the dummy's impact response in vehicle certification tests is thereby ensured.

Both Denton ATD (DATD) and FTSS suggested changes to the drawing package. DATD believed that to be ''complete,'' the specification package must have a ''definition of all 3 dimensional shapes with a pattern (definition of surfaces) with tolerances and complete material specifications.''

1. Three Dimensional (3-D) Shape Definitions

DATD recommended that NHTSA specify 3-D patterns, either physical or electronic, ''for all complex dummy parts.'' DATD suggested that NHTSA should make available physical patterns made from stable materials, and that the 3-D patterns ''must be stored and maintained by NHTSA to have traceability for the rule, and must be available now and as long as the rule is in effect to anyone who wants to verify the basic shape of dummy components or start building the dummy.''

Agency Response: We are denying the request to provide 3-D patterns to specify the dummy. The SID–IIsD drawings are comparable in detail to all other dummies previously incorporated into 49 CFR part 572. No dummy specification in Part 572 contains 3-D patterns. This is because 3-D patterns are unnecessary in inspecting whether the dummy is acceptable for use in an agency test, and in some respects, would be overly design restrictive. The drawing package sets forth the criteria that the agency uses to determine acceptability of the dummy through an inspection process. The drawing package is not intended for use in manufacturing a dummy, or to ensure the interchangeability of parts between dummies manufactured by different business entities. Although the agency does not provide 3-D drawings, shape dimensions are provided in the form of surface widths, lengths, and circumferences. The drawing package specifies features that are important to establish the appropriate anthropometry and composition of the dummy. The test device is typically intended to be representative of a segment of an identified population, e.g., small adult females. Accordingly, the dimensions and mass of the dummy are specified to ensure that the dummy physically represents the population intended. The dimensions, mass distribution and range of motion of dummy parts are also specified to ensure that the kinematics of the test device in a crash test replicates that of the human occupant and to assure that the dummy's instrumentation performs as intended. The PADI document also provides procedures for a dummy's assembly and disassembly during inspection. The document insures that a dummy inspection is carried out using uniform disassembly procedures and in a proper sequence.

The performance specifications that are set forth in 49 CFR part 572 establish the impact response requirements for the dummy. To determine the acceptability of a dummy, the dummy is inspected for its conformance to the drawing package and is tested according to the qualification tests in part 572. The agency conducts impact tests for individual body segments and their assemblies, and on the dummy as a whole to determine acceptance. The impact qualification tests and associated instrumented measurements address the accuracy and consistency of dummy responses in crash events.

The two-dimensional drawings, PADI document and impact performance requirements enable the establishment of an objective, repeatable test device. Dummies reflecting the configuration of the parts and their assemblies contained in these drawings have been successfully used for the development and evaluation of occupant protection systems in a variety of simulated and full-scale crash tests. Use of the two-dimensional drawings limited to minimal but critical specifications affords dummy manufacturers an amount of flexibility to generate their own manufacturing and process drawings and to use whatever procedures are needed to facilitate production, which would be constrained if the drawings and other specifications were specified such as by use of 3-D patterns. Such restrictions in the design and production of the test dummy by government regulation is unnecessary, may impede technology development and manufacturing innovation, and may increase the costs of test dummies and crash tests. If manufacturers want more explicit design and manufacturing specifications and construction instructions to enable them to interchange parts among different test devices, the dummy manufacturers could work with or through technical societies and manufacturer associations to attain their desired objectives.

For the aforementioned reasons, the agency is not specifying three-dimensional (3-D) patterns for the dummy parts.[20]

[20] Although two-dimensional drawing specifications are sufficient for agency rulemaking purposes, we will explore the feasibility of developing three-dimensional scans for future research and development purposes. Furthermore, for a period of 180 days following publication of this final rule, we will have available for public inspection one of the SID–IIsD dummies used by the agency in the development of the rule. To make arrangements to inspect the dummy, contact Dr.

Continued

2. Material Specifications

DATD stated that the drawings lacked sufficient specification of materials necessary to manufacture a reproducible dummy. DATD recommended that NHTSA provide performance-based specifications for all materials. ''For materials, the drawing should call out the density with a tolerance, minimum tensile strength, and hardness with a tolerance. For materials that require a dynamic performance (such as rubbers, urethanes, foams), they should have basic performance-based specifications such as density with a tolerance, some stiffness specification with a tolerance, and a measure of the damping of the material with a tolerance.''

Agency Response: The agency does not have the resources to provide the detailed performance-based specifications recommended by DATD for all materials used in the dummy, nor do we believe it is necessary to provide such exhaustive specifications. We have added ''or equivalent'' to the drawing when particular plastic or rubber materials are specified. The drawing package can provide a starting point for material selection, but the non-metallic materials referenced in the drawings are not required to be used to exact specifications as long as the material that is used has functional, density and stiffness similarities enabling the dummy to meet the drawing package specifications and the dynamic performance requirements in the 49 CFR Part 572 qualification tests. The materials used by the dummy manufacturer do not have to be identical, but must be generically alike with similar properties to the materials listed on the individual component drawings.

3. Dummy Drawing Changes

Comments on the SID–IIsFRG drawing package were made by First Technology Safety Systems (FTSS) and Denton ATD (DATD). While a number of comments related to the floating rib guide design, the majority of comments dealt with issues addressing design details of the base SID–IIs dummy which are common to both the SID–IIsFRG and SID–IIsD versions. FTSS comments (Docket entry 18865–25) consisted of 11 separate issues dealing mostly with the base dummy design. DATD (Docket entry 18865–32) identified by mark-ups 110 drawings that it felt were in need of specific changes.

The agency examined the dummy manufacturers' comments in great detail by performing a review of the specifications within the drawings and additional laboratory inspection of parts as needed.

As a result of this review, the agency developed a table, ''September 15, 2006: SID–IIsD Drawing Changes Since SID–IIs NPRM Docketed in December 2004,'' in which all changes made to the drawings since publication of the NPRM are summarized (the table has been placed in Docket 25442). While changes to the drawing package relating to the removal of floating rib guides are self-evident, most other drawing changes deal with relatively minor adjustments, such as: Eliminating dimensioning inconsistencies, filling in missing specifications, adjusting some dimensional tolerances, clarifying material callouts, and correcting misplaced dimensions and typographical errors.

The table has been structured to identify the changes by part number, drawing title, description of the change, initiating source and reason for the change, change letter, and date of revision. Furthermore, the reason for the change has been coded for the following categories:

1. Identical cross reference drawings—drawings identical to Subpart O, Hybrid III 5th percentile female parts;
2. ''Same as except for'' cross reference drawings—drawings identical to Subpart O; Hybrid III 5th percentile female parts with minor revisions;
3. Changes made with regard to Denton docket comments;
4. Changes made with regard to FTSS docket comments;
5. Changes made due to corrections/clarifications found as a result of internal review;
6. Changes due to change from FRG design;
7. Changes due to OSRP recommendations; and,
8. Changes due to design revisions based upon agency test results.

Of the 170 drawings involving revisions, 34 are associated with changes from FRG to SID–IIsD. While most other drawing changes are minor, the more substantive changes include revisions suggested by OSRP to improve the basic SID–IIsC dummy, and consequently the SID–IIsD, without affecting the dummy's performance. They involve:

- Use ½-inch linear potentiometers instead of ⅜-inch potentiometers and modifications of their attaching mounts to allow the potentiometer for more angular motion;
- Modified thorax and abdominal rib stops to allow further motion of the ribs at oblique impact angles; and
- Modified thorax and abdominal rib stop attachment brackets to accommodate 60 mm of rib deflection.

The drawings encompass also a number of modifications developed by FTSS for the FRG dummy and adopted for the SID–IIsC and D versions of the dummy, including:

- Shoulder rib revision to include thinner, taller damping material to improve durability and associated modification of the front guide to improve rib control and eliminate gouging;
- Inclusion of a shoulder rib bumper; and
- Revision of the neck bracket to accommodate the modified shoulder rib guides.

IV. Qualification Procedures and Response Corridors

a. Qualification Procedures

The NPRM proposed qualification tests composed of impact tests of the head and neck, thorax with and without arm, abdomen, and pelvis (acetabulum). As discussed above in this preamble, commenters Autoliv and the Alliance recommended including a separate shoulder qualification test. Further, the Alliance raised a concern about the acetabulum test not fully exercising the iliac load cell.

Agency Response: We agree with the commenters that the shoulder with arm test has merit. We also agree that the pelvis qualification test should include a pendulum test of the iliac. Both tests have been included in the procedures. In general, the qualification procedures for the SID–IIsD are the same as those proposed in the NPRM for the SID–IIsFRG, except for the addition of separate shoulder and iliac qualification test requirements. The qualification tests include impact tests of the head and neck, shoulder, thorax with and without arm, abdomen, and pelvis (acetabulum and iliac).

The performance qualification tests in this final rule serve to assure that the SID–IIsD is within the established performance response corridors and further assure the uniformity of dummy assembly, structural integrity, consistency of impact response under identical loading conditions, and adequacy of instrumentation. The tests ensure the reliability of the dummy's impact response in vehicle compliance tests. They are generally conducted at energy levels that are just short of or at the threshold levels that result in dummy readings corresponding to

Bruce Donnelly at NHTSA's Vehicle Research and Test Center, P.O. Box B37, East Liberty, Ohio 43319, or by telephone at 1–800–262–8309.

IARVs associated with moderate to serious injury.

The below listing provides an overview of test procedures that the SID–IIsD dummies need to conform to in order to qualify as Part 572 test devices. Performance criteria based on the results of these tests are provided in the next section b, infra.

Head Drop Test: Test procedure is the same as for SID–IIsFRG proposed in the NPRM. The disarticulated head is suspended 200 mm above a rigid flat surface, with the D-plane of the head at an angle of 35 degrees from vertical. After release, the head impacts the rigid flat surface on the lateral-superior aspect of the skull. Accelerations of the head center of gravity are measured in the 3 orthogonal axes.

Lateral Neck Bending Pendulum Test: Test procedure is the same as for SID–IIsFRG proposed in the NPRM. The headform-neck complex is attached at the base of the neck (C7–T1) to the bottom of a swinging arm pendulum such that the arc of swing of the pendulum is perpendicular to the mid-saggital plane of the head-neck. To initiate the test, the pendulum is rotated upward from the vertical hanging position and released. The pendulum swings downward under the influence of gravity until it reaches the vertical hanging position at an impact speed of 5.51–5.63 m/s. At that instant an attenuator begins to arrest its motion. The arresting force causes the head form to decelerate and bend the neck laterally relative to the pendulum. Measurements include the time and magnitude of rotation of the neck, and the forces and moments generated by the neck at the upper load cell.

Shoulder Impactor Test: This test procedure is similar to the thorax with arm impact procedure proposed in the NPRM. A 13.97 kg impactor with a 120.7 mm diameter face and 12.7 mm edge radius is accelerated to 4.4±0.1 m/s and directed laterally to impact the shoulder of the dummy. The dummy is seated on a rigid bench developed by the WorldSID design team [21] (hereinafter referred to as ''the certification bench''). Measurements include lateral deflection of the shoulder and the acceleration of T1 and the impactor.

Thorax with Arm Impactor Test: A 13.97 kg impactor with a 120.7 mm diameter face and 12.7 mm edge radius is accelerated to 6.7±0.1 m/s and directed laterally to impact the thorax of the dummy. The dummy is seated on a the certification bench. The arm in this test is down, positioned to the lowest detent, interposed between the ribs and the impactor. Longitudinal centerline of the probe is centered on the most lateral centerpoint of the middle rib within 2 mm. Measurements include the deflection of the shoulder and thorax ribs, accelerations of the spine at T1 and T12 and the impactor.

Thorax without Arm Impactor Test: A 13.97 kg impactor with a 120.7 mm diameter face and 12.7 mm edge radius is accelerated to 4.3±0.1 m/s and directed laterally into the thorax of the dummy. The dummy is seated on the certification bench. The arm in this test is removed to allow the impactor to contact the thorax directly so that the longitudinal centerline of the probe is centered on the centerline of the middle rib within 2 mm. Measurements include the deflection of the thorax ribs, and accelerations of the spine at T1 and T12 and of the impactor.

Abdominal Impactor Test: A 13.97 kg impactor with a 76.2 mm diameter face and 12.7 mm edge radius is accelerated to 4.4±0.1 m/s and directed laterally to impact the abdomen of the dummy with the longitudinal probe aligned to coincide with the centerpoint between the two abdominal ribs. The dummy, with arm removed, is seated on the certification bench. The dummy is positioned so that the longitudinal centerline of the impact probe is centered at time of impact on the lateral midpoint between the two abdominal ribs within ±2 mm. Measurements include the deflection of the abdominal ribs, accelerations of the spine at T12 and of the impactor.

Pelvis Acetabulum Impactor Test: A 13.97 kg impactor with a 120.7 mm diameter face and 12.7 mm edge radius is accelerated to 6.7±0.1 m/s and directed laterally and targeted to impact the longitudinal center of the pelvis plug of the dummy. The dummy, without the torso jacket installed, is seated on the certification bench. The dummy is positioned in the seat so that the longitudinal centerline of the impact probe at time of impact coincides with the longitudinal centerline of the pelvis plug, as installed within the acetabulum access hole in the pelvis flesh within ±2 mm. With the dummy's thoracic lateral plane set at ±1 deg. relative to the horizontal, the orientation of the impactor face is within ±1 degree of the vertical at the time of impact. Measurements include peak impactor and pelvis lateral accelerations and peak acetabulum force.

Iliac Impactor Test: A 13.97 kg impactor, with a 50.8 x 88.9 mm rigid, flat face and a depth of at least 76 mm at these dimensions, is accelerated to 4.3±0.1 m/s and directed laterally to impact the pelvis of an upright postured dummy seated with legs stretched out on a rigid flat horizontal surface. The dummy is positioned such that the longitudinal centerline of the impact probe coincides at the time of impact with the laterally oriented centerline of the iliac access hole in the iliac load cell within ±2 mm. With the dummy's thoracic lateral plane set at ±1 deg. relative to the horizontal, the orientation of the impactor is adjusted so that its 50.5 mm wide surface is horizontal within ±1 degree at the time of impact. Measurements include peak impactor and pelvis lateral accelerations and peak iliac force.

b. Response Corridors

To develop the qualification corridors set forth in today's final rule, NHTSA first conducted qualification tests on each major body segment of dummies 032 and 033, yielding an initial data base of at least five sets of impacts to each dummy. The upper torso was tested in two configurations: one with the arm down in which the arm was impacted by the probe at the second rib level; and one directly into ribcage with the arm removed. In addition, the agency also accumulated considerable amount of data from qualification tests of four dummies performed in conjunction with vehicle pole and MDB crash tests, extensive sled impacts, as well as special durability and biofidelity tests, for a total of nearly 400 component tests. The qualification data from the tests of the four dummies were obtained at two test laboratories.

The distribution of final qualification data used for corridor establishment from each of the four dummies per body segment are shown in Table 10. It should be noted that the number of qualification tests vary between body regions and between dummies. Inasmuch as the heads and necks are identical for all SID–IIs dummies, including the FRG version, and repeatability of these components was already established, we determined that there was no reason to subject these components to additional testing. In other instances, some dummies were used fewer times in vehicle tests. Also, the results of some tests had to be eliminated due to such circumstances as

[21] WorldSID is a next-generation 50th percentile male side impact dummy developed by industry representatives from the U.S., Europe and Japan (see Docket No. 2000–17252). The design team developed a WorldSID test bench for use in testing the dummy. The seat back angle and other features of the WS bench provide more stability in supporting the dummy than conventional test benches, which facilitates the evaluation of the dummy. NHTSA believes that the WorldSID bench will also make testing of the SID–IIsD more thorough and efficient, and so the agency will use that bench in its tests of the SID–IIsD.

incorrect impact speeds, transducer or data collection problems, etc. Additionally, as much as this data set included data from dummies used in crash tests, and as those dummies were not new, some judgment had to be used based on scatter plot dispersion as to which data points were outliers not fitting the general pattern of all other responses. Only two responses of nearly 400 were found to be significantly out of the range of all others, and were thus eliminated from consideration in setting the performance corridors. The final set of valid qualification data was obtained from a total of 394 component tests. Peak responses from each of the qualification tests, the complete list of qualification data, and a detailed discussion of data are provided in the Technical Report, ''Development of Certification Performance Specifications for the SID–IsD Crash Test Dummy,'' September 2006, NHTSA Office of Vehicle Safety Standards, Docket 25442 (hereinafter referred to as ''the Certification Performance Specifications Report'').

TABLE 10.—NUMBER OF QUALIFICATION TESTS PER BODY REGION

Body region/No. of tests	Dummy 20	Dummy 32	Dummy 33	Dummy 56	Total
Head	9	9	13	11	42
Neck	10	9	13	13	45
Shoulder	9	19	22	15	65
Thorax w/Arm	12	14	18	10	54
Thorax w/o Arm	9	14	18	10	51
Abdomen	10	14	17	9	50
Pelvis	10	14	18	10	52
Iliac	0	0	35	0	35
Total # Tests on Dummy	69	93	154	78	394

The combined data of all four dummies for a specific body segment were then subjected to a statistical analysis which included the calculation of the mean, the standard deviation and percent standard deviation from the mean. The construction of initial performance corridors was based on the following formulation:

- If the percent standard deviation was equal to or below 3%, the performance limits were set at ±3 standard deviations from the mean;
- If the percent standard deviation was above 3%, but not more than 5%, the performance limits were set at ±2 standard deviations from the mean;
- If the percent standard deviation was above 5%, the performance limits were set at ±10% from the mean.
- Upon derivation of initial upper and lower performance limits, any residual values beyond the first decimal in the lower part of the corridor were reduced to the next lowest first decimal value, and any residual beyond the first decimal in the upper part of the corridor was incremented to the next highest first decimal value.

The intent of the above formulation was to keep the initial performance corridors within 10% of the mean of the data, yet facilitate the ability to use narrower corridors where warranted by tightly grouped data.

Initial Response Ranges of the SID–IIsD Dummy in Qualification Tests

Based on the data compiled during the qualification tests in these test series and using the formulation cited above, the initial performance corridors for the SID–IIsD dummy were constructed for further consideration. They are shown in Table 11. The performance corridors developed by the agency using its own data and processing methods match relatively closely to the draft performance corridors developed by the OSRP for the Build Level SID–IIsC dummy, and to those submitted by FTSS in comments to the NPRM for the FRG dummy version, also shown in Table 11. Although control of the dummy maintenance is unknown for the OSRP testing, the results still were comparable to NHTSA's initial corridors. The reasonably well-matching responses between the two data sets indicate that improvements done to convert the SID–IIsC to SID–IIsD version did not significantly alter the dummy's performance, and substantiates the consistency and reliability of the dummy's design to reproduce similar responses. It also corroborates the corridors established and shows that they should be very representative of all dummies, regardless of qualification test lab. It should also be noted that this database is limited to dummies manufactured by FTSS, since at the time of the formulation of the data there were no other manufacturers producing this dummy.

TABLE 11.—COMPARISON OF NHTSA INITIAL CORRIDORS FOR THE SID–IIsD WITH THOSE SUGGESTED BY THE OSRP AND FTSS

Body region/performance range	Measurement parameter	NHTSA SID–IIsD (initial)	Draft OSRP*		OSRP***	FTSS**
			Option 1*	Option 2*	Final	
		Corridor	Corridor	Corridor	Corridor	Corridor
Head	Max Resultant Acceleration (g)	119.5–136.9	.....	.....	.....	115–135*
Neck	Max D–Plane Rotation (deg)	70.9–77.6	72–82	.....	.....	72–82*
	Max O–C Moment (N–m)	37.6–47.5	36–43	.....	.....	36–42*
Shoulder	Max Shoulder Deflection (mm)	30.1–36.8	30–36	29–36	29–36	.....
	Max Upper Spine Y Acceleration (g).	−17.2–(−19.1)	.....	.....	.....	.....
Thorax with Arm	Max Shoulder Deflection (mm)	31.7–38.8	35–40	33–42	32–40	29–41
	Max Upper Rib Deflection (mm)	25.5–31.3	27–33	26–33	24–32	24–34
	Max Middle Rib Deflection (mm)	30.0–34.9	32–38	31–39	31–39	28–35

TABLE 11.—COMPARISON OF NHTSA INITIAL CORRIDORS FOR THE SID–IIsD WITH THOSE SUGGESTED BY THE OSRP AND FTSS—Continued

Body region/performance range	Measurement parameter	NHTSA SID–IIsD (initial)	Draft OSRP*		OSRP***	FTSS**
			Option 1*	Option 2*	Final	
	Max Lower Rib Deflection (mm)	32.3–37.1	33–39	32–40	33–41	31–37
	Max Lower Spine Acceleration (g)	28.6–35.1	29–34	28–35	28–36	32–41
Thorax without Arm	Max Upper Rib Deflection (mm)	32.7–39.9	33–39	32–40	32–40	33–43
	Max Middle Rib Deflection (mm)	38.5–44.7	40–46	38–47	38–46	40–46
	Max Lower Rib Deflection (mm)	36.1–42.6	37–43	35–44	34–42	36–44
	Max Lower Spine Acceleration (g)	7.8–9.6	9–12	8.5–12.6	8–13	9–13
Abdomen	Max Upper Rib Deflection (mm)	38.7–47.0	40–46	39–48	40–48	37–47
	Max Lower Rib Deflection (mm)	38.2–46.8	38–44	37–46	38–46	36–46
	Max Lower Spine Acceleration (g)	11.3–13.9	10–12	8.8–13.2	9–13	11–16
Pelvis—Acetabulum	Max Pelvis Accleration (g)	41.3–50.1	47–54	45–56	46–56	.....
	Max Acetabulum Force (kN)	3.7–4.3	3.8–4.8	3.9–4.8	3.9–4.8	.....
Pelvis-Iliac	Max Pelvis Accleration (g)	26.6–32.6	.....	.....	.....	.....
	Max Iliac Force (kN)	3.7–4.5	.....	.....	.....	.....

*Based on BLC version of dummy (Docket 25442, OSRP Upgrade Task Group (UTG) Chairman note of August 24, 2005); **based on FTSS docket comments; ***based on BLD version (Docket 25442, OSRP UTG minutes of July 20, 2006).

Performance Specification Selection for the SID–IIsD Dummy

The agency evaluated the effect of the conversion of floating rib guides to fixed rib guides and other changes to the features of the dummy on the qualification performance corridors proposed in the NPRM and determined that the corridors should be adjusted. To arrive at the amount of adjustment needed, the agency pooled all of the available qualification data in its test records and performed a statistical analysis including the plotting of scattergrams for selection of potential upper and lower performance boundaries. Specific response data and statistical analysis for the combined dummy population can be found in the Certification Performance Specifications Report, *id.* These were subsequently compared to those made available in docket comments and those proposed in the NPRM, as well as the data provided by OSRP on SID–IIs Build Level C and D dummies. The final setting of performance corridors was to assure that the selected corridor limits reflected the entire set of response data generated by the agency, and that they also were in general agreement with the data made available through docket comments and by the OSRP SID–IIs dummy working group, who had the responsibility of developing performance criteria for the Alliance. (Minutes of the OSRP meeting containing suggested corridors have been submitted to the docket for today's final rule (Docket 25442).)

Table 12 provides the final performance specification selections for each body segment. The first column, under NHTSA SID–IIsD Statistics, is a listing of performance corridors based on NHTSA qualification tests of dummies ##020, 032, 033 and 056. Except for the head and neck, they include on the average just a little over 50 data points for each body segment. (Inasmuch as the heads and necks are the same as those tested under the FRG series, repeatability qualification tests for them were omitted. Accordingly, those tests are fewer in number.) Also, several impact tests were omitted from the statistics due to their higher or lower impact speeds than allowed by the limits.

The initial limits related to IARVs shown in the NHTSA SID–IIs Statistics column were then reviewed in the context of FTSS scatter plots for the head and neck and the OSRP drafted corridors for the thorax and abdomen. Except for the pelvis acetabulum and iliac response values which were developed without FTSS and OSRP data, this review and adjustment took into account and attempted to reconcile both the limits developed by OSRP and the response ranges developed by the agency, including some certification test control values not related to IARVs. Some of the IARV-related corridors were adjusted to take into account the larger base of submitted qualification data, but only to the extent that adjustments were within approximately ±10% of the mean of the agency's data. As indicated by Table 12, there was reasonably close correspondence between NHTSA SID–IIsD Statistics and the FTSS and OSRP ''Final'' suggested performance ranges,[22] and adjustments needed to arrive at final qualification performance specifications were relatively minor. The specifications listed in Table 12 constitute the performance requirements to which Part 572 SID–IIsD dummies must conform, as specified in today's final rule.

TABLE 12.—PERFORMANCE SPECIFICATIONS FOR THE SID–IIsD IN CERTIFICATION TESTS

Body region/performance range	Probe impact velocity	Response measurement	NHTS A SID–HsD statistics	NHTSA final rule performance specification
Head	.....	Max Resultant Acceleration (g)	119.5–136.9	115–137
Neck	.....	Max D–Plane Rotation (deg)	70.9–77.6	71–81
	.....	Max O–C Moment (N-m)	39.0–45.1	36–44
Shoulder	4.4 m/s	Peak impactor acceleration (g)	14.1–17.8	14–18
		Max Shoulder Deflection (mm)	30.1–36.8	30–37
		Max Upper Spine Y Acceleration (g)	17.2–19.1	17–19
Thorax with Arm	6.7 m/s	Peak impactor acceleration (g)	31.3–36.0	31–36

[22] Final corridors are in Table 11, *supra.*

TABLE 12.—PERFORMANCE SPECIFICATIONS FOR THE SID–IISD IN CERTIFICATION TESTS—Continued

Body region/performance range	Probe impact velocity	Response measurement	NHTS A SID–HsD statistics	NHTSA final rule performance specification
		Max Shoulder Deflection (mm)	31.7–38.8	31–40
		Max Upper Rib Deflection (mm)	25.5–31.3	26–32
		Max Middle Rib Deflection (mm)	30.0–34.9	30–36
		Max Lower Rib Deflection (mm)	32.3–37.1	32–38
		Max Upper Spine Y Acceleration (g)	34.9–42.4	34–43
		Max Lower Spine Acceleration (g)	28.6–35.1	28–35
Thorax without Arm	4.3 m/s	Peak impactor acceleration (g)	14.8–17.3	14–18
		Max Upper Rib Deflection (mm)	32.7–39.9	33–40
		Max Middle Rib Deflection (mm)	38.5–44.7	39–45
		Max Lower Rib Deflection (mm)	36.1–42.6	36–43
		Max Upper Spine Y Acceleration (g)	13.9–16.5	14–17
		Max Lower Spine Acceleration (g)	7.8–9.6	7–10
Abdomen	4.4 m/s	Peak impactor acceleration (g)	12.2–15.7	12–16
		Max Upper Rib Deflection (mm)	38.5–47.1	39–47
		Max Lower Rib Deflection (mm)	38.2–46.8	37–46
		Max Lower Spine Acceleration (g)	11.3–13.9	11–14
Pelvis—Acetabulum	6.7 m/s	Peak impactor acceleration (g)	38.5–46.9	38–47
		Max Pelvis Acceleration (g)	41.3–50.1	41–50
		Max Acetabulum Force (kN)	3.7–4.3	3.8–4.6
Pelvis—Iliac*	4.3 m/s	Peak impactor acceleration (g)	34.9–38.9	34–40
		Max Pelvis Acceleration (g)	26.5–32.5	27–33
		Max Iliac Force (kN)	3.7–4.5	3.7–4.5

*Based on "new" (softer-version 2) iliac wings.

V. Dummy Performance in Full-Scale Vehicle Crash Tests

The agency conducted a series of vehicle crash tests utilizing a broad variety of passenger vehicles. The test program method and results are discussed in detail in a technical report entitled, "NHTSA Fleet Testing for FMVSS 214 Upgrade, MY 2004–2005, January 2006," Docket 25442.

The objectives of the test program were to evaluate the dummy's responses in different loading conditions with respect to the injury assessment reference values (IARV) proposed in the May 17, 2004 NPRM on FMVSS No. 214, to assess the dummies' durability, and to investigate the crashworthiness characteristics of a broad range of fleet vehicles. The series consisted of ten vehicle-to-pole tests (according to the FMVSS No. 214 proposed upgrade) and eight moving deformable barrier (MDB) tests (see test matrix in Table 13, below). In the MDB tests, SID–IIsD dummies were seated in both the driver and rear passenger positions, resulting in 16 total MDB exposures with SID–IIsD dummies. The tests provided information on how the SID–IIsD dummies function in a variety of impact environments and the extent to which their response signatures are consistent with the crash event and free of disruptions and anomalies.

TABLE 13.—VEHICLE CRASH TEST MATRIX

Vehicles	Side airbag type	Vehicle class/weight	Oblique impact/SID–IIsD dummy		
			Pole 32 km/h	MDB 52 km/h	
			Driver	Driver	Rear Passenger
Toyota Corolla	Curtain + Torso	Light PC	X	X	X
VW Jetta	Curtain + Torso	Compact PC	X	X	X
Saturn Ion	Curtain	Compact PC	X	X	X
Honda Accord*	Curtain + Torso	Medium	X	X	X
Ford 500	Curtain + Torso	Heavy PC	X	X	X
Toyota Sienna*	Curtain + Torso	Mini Van	X		
Subaru Forester	Head + Torso Bag	Small SUV	X	X	X
Honda CRV	Curtain + Torso	Small SUV	X	X	X
Chevy Colorado (4x2 Ext. Cab).	Curtain	Small Pickup	X		
Ford Expedition	Curtain	Large SUV	X		
Suzuki Forenza	Combo	Small SUV		X	X

*2004 Vehicles.

Tables 14 and 15 provide summaries of IARV-based dummy responses that were recorded in pole and MDB crash tests, respectively. Although rib deflections were not proposed as IARVs in the FMVSS No. 214 NPRM, the tables also include thorax and abdomen rib deflection measurements because the deflections are potential indicators of injury potential to the occupant and also provide information on the paths and sequence of loading that the intruding

vehicle interior imparts to the occupant. In this test series, the measured data traces were reviewed and correlated with visual observations of dummy kinematics and interaction with vehicle interior or intruding exterior surfaces.

a. Oblique Vehicle-to-Pole Crash Tests

Test results for the 10 vehicles evaluated in the oblique pole test are presented in Table 14. In these tests, seven vehicles exceeded at least one or more IARVs of the FMVSS No. 214 NPRM. Two of the tested vehicles did not exceed any of the proposed IARV limits, but they had T12 accelerations and/or pelvic loads in excess of 80% of the IARVs. The Toyota Corolla test failed to record the pelvis force response because of electrical malfunction; all other IARV values for the vehicle were below the proposed thresholds.

TABLE 14.—SID–IIsD DRIVER RESPONSE IN POLE OBLIQUE CRASH TESTS

Vehicles	Driver Results				
	HIC 36	Lower spine (g)	Thorax defl. (mm)	Abdomen defl. (mm)	Pelvis force *** (N)
Proposed IARV	1,000	82	** 38	** 45	5,100
Toyota Corolla	418	69.6	47	49	[1]
VW Jetta	478	54.2	33.3	33.8	7876
Saturn Ion	5203	109.6	32	52	5755
Ford 500	7017	92.4	37	57	6542
Subaru Forester	160	54.6	31	45	4707
Honda CRV	531	67.9	26	36	4670
Chevy Colorado	896	135.3	31	59	9387
Ford Expedition	5661	95.6	35.3	53.3	8249
Honda Accord*	567	63.0	31	30	10848
Toyota Sienna *	2019	67	45.6	57.9	6956
Average	2295	82.9	34.9	47.3	7221.1

[1] No data.
* 2004 MY.
** Informal thresholds; all measured values have been rounded to the nearest full number.
*** Crush based pelvis plug and original (stiffer) iliac wing.

Overview of Driver Injury Assessment and Impact Mechanics in Pole Test

• Head

Four of the 10 vehicles tested with the SID–IIsD in the driver's seating position exceeded the HIC_{36} 1000 limit. These were the Saturn Ion, Ford Five Hundred, Toyota Sienna, and Ford Expedition.

In the Saturn Ion test, the pole partially penetrated the air curtain, exposing a hard spot beneath the air pocket/tether attachment interface where the front portion of the dummy's head made contact.

The Ford Five Hundred was equipped with a head curtain and a thorax bag, but review of the test film indicated that the Ford Five Hundred's sensor began to deploy the air curtain at approximately 70 ms. The dummy's head hit the pole at approximately 60 ms. In the Ford Expedition and the Toyota Sienna tests, air curtains deployed, but the dummies' heads hit the front edge of the curtain's front pocket. This allowed the heads to hit the pole, resulting in high HIC values.

In contrast, the same four vehicles produced relatively moderate HIC scores with the ES–2re 50th percentile adult male dummy in the oblique pole test. *Id.* The difference in results can be attributed in large part to seat fore-and-aft position differences between the dummies, as well as to the ES–2re's taller seated height.

• Lower Spine and Thorax/Abdomen

Lower spine acceleration magnitudes were generally consistent with the SID–IIsD thoracic and abdominal rib deflections. Seven of the 10 vehicle tests with the SID–IIsD produced rib deflection measurements exceeding 38 mm for thoracic ribs and/or 45 mm for abdominal ribs. In six of the seven vehicle tests, the lower spine (T12) acceleration values were also elevated (within 80 to 100 percent of 82 g). The six vehicles were the 2005 Toyota Corolla, 2005 Saturn Ion, 2005 Ford 500, 2004/05 Toyota Sienna, 2005 Chevy Colorado 4x2 extended cab, and the 2005 Ford Expedition. Likewise, the lower spine acceleration criterion identified elevated loading conditions in the test of the 2005 Honda CRV. In that test, the abdominal rib deflection and the lower spine acceleration were within 80 percent of the respective IARV limits.

• Pelvis Force

Seven of the 10 vehicles exceeded the proposed 5,100 N pelvis force injury criterion. (One of the tested vehicles (Toyota Corolla) lost the pelvis data due to electrical problems not related to the dummy.) During pole impact, the collapsing door structure usually impacts the dummy in the pelvis area at significant severity levels. Video analysis shows the dummy, upon initial contact with the vehicle structure, typically being pushed towards the vehicle's interior and, in some tests, being wedged between the center console and the collapsed door structure. The dummies in the Honda Accord and the VW Jetta tests exceeded only the pelvis IARV limits while having relatively low responses for the remaining IARVs. The data from the tests indicate that the small dummy is capable of identifying a major potentially injurious load path in pole tests that current occupant protection systems will need to address.

The above analysis was based on tests with SID–IIsD dummies used with the ''precrushed'' pelvis plug, and with the original (stiffer) iliac wing. The agency analyzed the vehicle crash test data and scaled down their iliac load component to reflect current ''softer'' iliac wing properties. The analysis estimated that softer iliac wings would lower the average driver occupant's pelvis force between 7% and 8%. In only one case of the 9 dummy occupants' responses reviewed would the pelvis IARV revert from just being above the proposed IARV limit to just being below the proposed limit. (It is also noted that the agency is considering comments to the

FMVSS No. 214 NPRM that suggest revising the proposed IARV limit.)

b. MDB Tests

The test matrix included eight MDB tests. All eight vehicles in MDB crashes were the same model vehicles as in pole tests, except for the Chevy Colorado and Ford Expedition, which were not tested by the MDB. The SID–IIsD dummies were used in both the driver and rear passenger positions. Data from the tests are set forth in Table 15. The data show that dummies' impact responses in five out of eight crashed vehicles were all below the IARV limits for both the driver and rear occupant positions. Dummies in the three remaining vehicles exceeded the pelvis IARV. The data in the table also show that the average responses of any measurement were higher by rear passenger than driver dummies. The differences were most substantial in the HIC, thorax and abdominal deflections.

TABLE 15.—SID–IIsD DRIVER-REAR PASSENGER RESPONSE IN MDB CRASH TESTS

Vehicles	Driver HIC 36	Rear pass HIC 36	Driver lower spine (g)	Rear pass lower spine (g)	Driver pelvis force (N)***	Rear pass pelvis force (N)***	Rear thorax defl.** (mm)	Pass pass thorax defl.** (mm)	Driver abdomen defl. ** (mm)	Rear pass abdomen defl.** (mm)
Proposed IARV	1,000	1,000	82	82	5,100	5,100	**38	**38	**45	**45
Toyota Corolla	78	330	58.6	56.6	4655	3183	16.7	35.3	25.7	32.2
VW Jetta	46	103	30.4	52	2639	3026	12.2	48.8	18.2	43.1
Saturn Ion	189	220	53.2	73.1	8993	3964	19.1	46.7	39.3	51.7
Ford 500	46	216	30.6	42.4	2140	2925	15.8	45.1	25.2	45.6
Subaru Forester	43	150	37.1	43.1	3066	3572	11.4	24.2	11.2	25.9
Honda CRV	38	107	31.5	55.8	1350	3149	16.3	37.3	7.5	40
Honda Accord*	104	298	50.2	56.8	4150	6917	19.9	29.6	21.7	32.4
Suzuki Forenza	69	773	53	73.1	4948	6558	27	41.2	27.5	46.2
Average	77	275	43.1	56.6	3993	4162	17.3	38.5	22	39.6

* 2004 MY.
** Informal thresholds; all measured values have been rounded to the nearest full number.
*** Crush based pelvis plug and original iliac wing.

Overview of Injury Assessments and Impact Mechanics in MDB Tests

• Head

All driver and passenger dummies passed the HIC 1000 criterion. All of the vehicles were equipped with air curtains and front seat torso air bags, except the Suzuki Forenza, which had only an air curtain. The front seat torso air bag in the vehicles interfaced the dummy's torso high near the shoulder, which appeared to provide additional head protection to the smaller driver dummy.

• Lower Spine

All of the driver SID–IIsD dummies' lower spine T12 responses were well below the proposed IARV limit. The rear passenger dummies in six of eight vehicles tested were also below the proposed IARV value. The two exceptions, the Saturn Ion and the Suzuki Forenza, had rear passenger dummies measuring T12 responses within 80 percent of the proposed IARV.

• Pelvis

The Saturn Ion driver dummy pelvis response was well above the proposed pelvis IARV limit. In addition, pelvis responses for the driver dummies of the Suzuki Forenza and the Toyota Corolla were within 80% of the proposed pelvis IARV limit. The responses for the dummy in the rear passenger position in the Honda Accord and the Suzuki Forenza also exceeded the IARV threshold, but by a lesser margin than in the Ion test.

The above analysis is based on tests with SID–IIsD dummies used with the ''precrushed'' pelvis plug and the original (stiffer) iliac wing. The agency analyzed the vehicle crash test data and scaled down their iliac load component to reflect current ''softer'' iliac wing properties. The analysis estimated that softer iliac wings would lower the average driver occupant'' pelvis force between 7% and 8% and the passenger's just above 3%. In none of the 16 dummy occupants responses reviewed would the pelvis IARV revert from just being above the IARV limit to just being below the IARV limit.

• Thorax and Abdomen

All dummies in the driver position exhibited thorax and abdominal rib deflections below the informal IARV thresholds. The dummy in the Saturn Ion had an abdomen rib deflection (39 mm) within 80% of the 45 mm informal IARV. The measurement reflected the significant intrusion of the passenger compartment and jamming the dummy between the displaced seat and the intruding door structure.

Dummies in the rear passenger position in the VW Jetta, Saturn Ion, Suzuki Forenza, and Ford Five Hundred had thorax deflections exceeding the informal IARV limits. Abdominal rib deflections exceeded the informal IARV limit for rear-seated dummies in the Saturn Ion, Suzuki Forenza, and Ford Five Hundred. Rear passengers in the remaining vehicles, except for Subaru Forrester, did not exceed the limit but were within 80% of the thorax/abdomen informal IARV threshold values. The Subaru Forrester was the only vehicle in which all of the dummy's deflections were below 80% of the thorax and abdominal rib deflection thresholds.

The average thorax and abdominal rib deflections of the SID–IIsD dummies in the vehicle test program were nearly twice as high for rear passengers than for drivers.

c. Summary

The dummy responses in the MDB and pole crash tests showed that the SID–IIsD is well suited and equipped to assess the potential of injury to small stature occupants in the oblique pole

and MDB test environments. In the environments tested, the dummies' structure and the data acquisition systems retained their physical and response integrities, sometimes under very severe vehicle structural failures. The dummies did not produce data signals with indications of faults, disruptions, or distortions due to mechanical failures of the dummy.

The SID–IIs dummies demonstrated necessary sensitivity to differentiate not only between vehicles having different structural side impact crush properties, but also between the protection systems offered in driver and passenger seating locations. The driver dummy in general was showing lower intensity impact responses than the rear passenger dummy. The most apparent reason for lower loadings on the driver was the crush characteristics of the crash which produced greater intrusion and concentrated loading to the rear passenger seating location. Importantly, the SID–IIsD demonstrated an ability to assess quantitatively insufficient countermeasures, such as unprotected environments or improperly operating occupant protection systems, *e.g.*, late deployment timing.

VI. Conclusions

For the aforementioned reasons, NHTSA has decided to amend 49 CFR Part 572 by adding design and performance specifications for the SID–IIsD 5th percentile adult female side impact dummy. The agency concludes that the SID–IIsD dummy is a sound and useful test device that will provide valuable information for assessing the injury potential of small stature driver and rear seated passenger occupants in motor vehicle side crashes. The test dummy will allow the agency to assess the degree to which vehicle systems protect small stature occupants in side crashes, and will be a valuable tool in the agency's endeavors to increase the protection of smaller stature occupants in side impacts.

Rulemaking Analyses and Notices

Executive Order 12866 and DOT Regulatory Policies and Procedures

Executive Order 12866, ''Regulatory Planning and Review'' (58 FR 51735, October 4, 1993), provides for making determinations whether a regulatory action is ''significant'' and therefore subject to Office of Management and Budget (OMB) review and to the requirements of the Executive Order. This rulemaking action was not considered a significant regulatory action under Executive Order 12866. This rulemaking action was also determined not to be significant under the Department of Transportation's (DOT's) regulatory policies and procedures (44 FR 11034, February 26, 1979). The cost of an uninstrumented SID–IIsD is approximately $47,000. Instrumentation adds approximately $24,000 for minimum requirements. The total cost of a minimally-instrumented compliance dummy is approximately $71,000.

This document amends 49 CFR Part 572 by adding design and performance specifications for a 5th percentile adult female side impact dummy that the agency will use in research and in compliance tests of the Federal side impact protection safety standards. This 49 CFR Part 572 final rule does not impose any requirements on anyone. Businesses would be affected only if they choose to manufacture or test with the dummy. Because the economic impacts of this final rule are minimal, no further regulatory evaluation is necessary.

Regulatory Flexibility Act

Pursuant to the Regulatory Flexibility Act (5 U.S.C. 601 *et seq.*, as amended by the Small Business Regulatory Enforcement Fairness Act (SBREFA) of 1996), whenever an agency is required to publish a proposed or final rule, it must prepare and make available for public comment a regulatory flexibility analysis that describes the effect of the rule on small entities (*i.e.*, small businesses, small organizations, and small governmental jurisdictions), unless the head of the agency certifies the rule will not have a significant economic impact on a substantial number of small entities. The Small Business Administration's regulations at 13 CFR Part 121 define a small business, in part, as a business entity ''which operates primarily within the United States.'' (13 CFR 121.105(a)).

We have considered the effects of this rulemaking under the Regulatory Flexibility Act. I hereby certify that this rulemaking action will not have a significant economic impact on a substantial number of small entities. This action will not have a significant economic impact on a substantial number of small entities because the addition of the test dummy to Part 572 will not impose any requirements on anyone. This rule does not require anyone to manufacture the dummy or to test vehicles with it.

National Environmental Policy Act

NHTSA has analyzed this final rule for the purposes of the National Environmental Policy Act and determined that it will not have any significant impact on the quality of the human environment.

Executive Order 13132 (Federalism)

NHTSA has analyzed this amendment in accordance with the principles and criteria set forth in Executive Order 13132. The agency has determined that this final rule does not have sufficient federalism implications to warrant consultation and the preparation of a Federalism Assessment.

Civil Justice Reform

This final rule would not have any retroactive effect. 49 U.S.C. 30161 sets forth a procedure for judicial review of final rules establishing, amending, or revoking Federal motor vehicle safety standards. That section does not require submission of a petition for reconsideration or other administrative proceedings before parties may file suit in court.

Paperwork Reduction Act

Under the Paperwork Reduction Act of 1995, a person is not required to respond to a collection of information by a Federal agency unless the collection displays a valid control number from the Office of Management and Budget (OMB). This final rule does not have any requirements that are considered to be information collection requirements as defined by the OMB in 5 CFR Part 1320.

National Technology Transfer and Advancement Act

Section 12(d) of the National Technology Transfer and Advancement Act of 1995 (NTTAA), Public Law 104–113, section 12(d) (15 U.S.C. 272) directs NHTSA to use voluntary consensus standards in its regulatory activities unless doing so would be inconsistent with applicable law or otherwise impractical. Voluntary consensus standards are technical standards (*e.g.*, materials specifications, test methods, sampling procedures, and business practices) that are developed or adopted by voluntary consensus standards bodies, such as the Society of Automotive Engineers (SAE). The NTTAA directs us to provide Congress, through OMB, explanations when we decide not to use available and applicable voluntary consensus standards.

The following voluntary consensus standards have been used in developing the SID–IIsD dummy:

- SAE Recommended Practice J211, Rev. Mar95 ''Instrumentation for Impact Tests''; and
- SAE J1733 of 1994–12 ''Sign Convention for Vehicle Crash Testing''.

There were no relevant voluntary consensus standards that were not used in the formulation of this final rule.

Unfunded Mandates Reform Act

Section 202 of the Unfunded Mandates Reform Act of 1995 (UMRA), Pub. L. 104–4, Federal requires agencies to prepare a written assessment of the costs, benefits, and other effects of proposed or final rules that include a Federal mandate likely to result in the expenditure by State, local, or tribal governments, in the aggregate, or by the private sector, of more than $100 million annually (adjusted for inflation with base year of 1995). Before promulgating a NHTSA rule for which a written statement is needed, section 205 of the UMRA generally requires the agency to identify and consider a reasonable number of regulatory alternatives and adopt the least costly, most cost-effective, or least burdensome alternative that achieves the objectives of the rule.

This final rule will not impose any unfunded mandates under the UMRA. This rule does not meet the definition of a Federal mandate because it does not impose requirements on anyone. It amends 49 CFR Part 572 by adding design and performance specifications for a side impact dummy that the agency will use to evaluate manufacturers' compliance with applicable Federal safety standards and for research purposes. This rule affects only those businesses that choose to manufacture or test with the dummy. It does not result in costs of $100 million or more to either State, local, or tribal governments, in the aggregate, or to the private sector.

Regulation Identifier Number

The Department of Transportation assigns a regulation identifier number (RIN) to each regulatory action listed in the Unified Agenda of Federal Regulations. The Regulatory Information Service Center publishes the Unified Agenda in April and October of each year. You may use the RIN contained in the heading at the beginning of this document to find this action in the Unified Agenda.

Appendix A to Preamble: Durability and Overload Analysis of the SID–IIsD Test Dummy

Table of Contents

I. Introduction
II. Durability Analysis
a. NHTSA Durability Assessment Analysis
1. Dummy Durability in Qualification Test Exposures
2. Dummy Durability in Sled Tests
3. Dummy Durability in Vehicle Crash Tests
4a. Dummy Durability in Overload Sled Tests
4b. Overload of Thorax and Abdomen Responses in Pendulum Tests
b. Comparison of SID–IIsD With SID–IIsC Reported by Alliance
III. Summary of Appendix A

I. Introduction

Durability of a crash test dummy is an important consideration in determining its suitability for adoption into Part 572 for use as a test device in FMVSS compliance and New Car Assessment Program (NCAP) consumer information programs. In FMVSS compliance testing, test dummies are exposed to a wide range of crash conditions, ranging from vehicles with highly advanced crashworthiness technologies to vehicles that lack either sufficient structural integrity and/or occupant protection provisions to mitigate crash forces adequately. A crash test dummy must be durable to maintain structural and data acquisition integrities sufficiently when used for testing throughout this range of crash conditions.

II. Durability Analysis

The agency analyzed the durability of the SID–IIsD to assess whether the dummy will be durable enough to be used in FMVSS No. 214 as a compliance test instrument, and potentially as a test device in NHTSA's NCAP Program. The durability assessment was based on—

(a) the results of our tests of four SID–IIsD dummies that were exposed to a total of:

- over 400 qualification-type impacts;
- 30 sled tests;
- 11 full scale vehicle to pole crash tests and 20 MDB full scale crash tests; and
- sled and pendulum tests at elevated impact speeds (elevated to assess durability and biofidelity); and

(b) the data OSRP supplied on the durability of the predecessor SID–IIsC dummy.

The dummy's structural robustness as assessed in the items under section (a) above is discussed in a technical report entitled, ''Certification and Maintenance Records of the SID–IIs Build Level D Dummies used in NHTSA Rulemaking Support Tests'' (Docket 25422). Table A1, below, provides information on the number and the types of impacts to which each of the four dummies was exposed in agency testing.

TABLE A1.—NUMBER OF SID–IISD DUMMY EXPOSURES FOR ASSESSMENT OF DURABILITY IN A VARIETY OF IMPACT ENVIRONMENTS

Type of impact/dummy		#032	#033	#020	#056	Comments
No. of pendulum type qualification impact tests (6 segment tests per procedure—does not include head and neck tests or faulty tests).	Impactor Probe	75	128	50	54	Dummies #032 & #033 were refurbished after 10 pole tests. #20 was refurbished after completion of MDB tests. No structural failures prior to refurbishments.
Sled tests R&R	Flat Wall	5	5			
	Abdomen Offset	5	5	5	5	
Pole tests at 32 km	Driver	2	3	3	3	
MDB tests at 53 km/h	Driver	1	1	3	3	
	Passenger	1	1	3	3	
MDB test at NCAP speed	Driver	1		1		
	Passenger		1		1	
Sled tests durability	Various		8			
Specialty tests (biofidelity, overload)	Impactor Probe		5			
Total Dummy Impact Exposures		90	157	60	69	

a. NHTSA Durability Assessment Analysis

1. Dummy Durability in Qualification Test Exposures

Insight into the dummies' durability was gained in qualification level tests when two dummies were tested for repeatability at the subsystem-component levels, and when the dummies were demonstrated to pass these Part 572 tests prior to sled and vehicle crash tests. Prior to this agency assessment series, dummies 032 and 033 had been subjected to a considerable number of crash tests. For this reason, since the dummies were already subjected to wear, the durability assessment based on qualification-type tests reflects a conservative estimate of the dummy's capability to withstand exposures in various types of impact environments.

In the Build Level D test series, as shown in Table A2 below, individual body segments of dummies 032 and 033 were subjected each from 9 to 35 qualification test impacts, for a total of 93 and 154 impacts, respectively. Prior to their scheduled repeatability test series, both dummies were retrofitted with new ribs, potentiometers, and pelvis flesh. The evaluation for repeatability consisted of a series of five consecutive qualification tests to each dummy's shoulder, thorax, abdomen and pelvis (acetabulum and ilium).

TABLE A2.—NUMBER OF QUALIFICATION TESTS PER BODY REGION

Body region/No. of tests	Dummy 20	Dummy 32	Dummy 33	Dummy 56	Total
Head	9	9	13	11	42
Neck	10	9	13	13	45
Shoulder	9	19	22	15	65
Thorax w/Arm	12	14	18	10	54
Thorax w/o Arm	9	14	18	10	51
Abdomen	10	14	17	9	50
Pelvis	10	14	18	10	52
Iliac	0	0	35	0	35
Total # Tests on Dummy	69	93	154	78	394

Similarly, individual body segments of dummies 020 and 056 were subjected to about 9 to 15 qualification test impacts each during the test program.

None of the dummies experienced any structural or instrumentation failures, except for noted structural degradation of the left iliac wings. In the subsequently adjusted qualification test loadings, the right iliac wings have not shown any evidence of structural degradation. Further details may be found in ''SID–IIs Iliac Certification Development,'' *supra,* Docket 25422.

2. Dummy Durability in Sled Tests

Sled tests were performed at the Medical College of Wisconsin by permitting the seated dummy to slide laterally at 6.0 m/s and impact a flat rigid wall with and without armrest. Dummies 032 and 033 were exposed at MCW for a total of 10 sled tests each. The first five tests were lateral impacts into a flat wall rigid barrier configuration, and the subsequent five tests were into a flat barrier configuration with a protruding armrest simulation attached to it. In two armrest-equipped barrier tests, dummy 032 experienced clearly visible shoulder clipping as evidenced by the dummy being momentarily hung-up on the top edge of the barrier rigid load wall plate. In three other tests of dummy 032, as well as with dummy 033, the shoulder hang-up was still in evidence but to a lesser time duration as less distinct indications of clipping. Importantly for this durability analysis, despite the clipping, none of the dummies experienced structural or functional damage.

It was also observed that at the time of clipping the shoulder deflection trace near peak compression went from a smooth to a distorted pattern and continued with some distortion during the unloading portion of the deflection time trace. While the clipping effects had nothing to do with the dummy's performance as a measuring test device, the agency was not certain how they might have affected all other sensor responses. Because the suspect data could not be used for decision-making, the agency decided to repeat the abdominal test offset test series at TRC with dummies 020 and 056 on the HYGE sled with the upper edge of the barrier raised sufficiently high to preclude shoulder clipping. In these tests, the dummies experienced neither shoulder clipping nor any other structural or functional problems. Further details on these sled tests may be found in ''Repeatability, Reproducibility and Durability Evaluation of the SID–IIs Build Level D Dummy in the Sled Test Environment,'' *supra*, Docket 25422 (hereinafter, ''the MCW report'').

3. Dummy Durability in Vehicle Crash Tests

Full scale crash testing in the proposed FMVSS No. 214 pole test configuration was a crucial phase of the dummy's durability assessment. Except to the extent discussed below regarding the Saturn Ion test, the SID–IIs dummies experienced no structural or functional problems, and even in the Ion test the damage was incidental.

As indicated in Table A1, dummy 032 was used in two pole and two MDB crash tests, and dummy 033 in three pole and two MDB crash tests. In addition, each dummy was also used in an NCAP MDB crash at 62 km/h. In the pole crash test of the Saturn Ion, the driver dummy became jammed between the crushed door, the displaced and rotated seat, and the steering wheel. The vehicle structure had to be cut to extract the dummy from the driver compartment. Inspection of the dummy showed the abdominal ribs having been driven upwards and jammed into the interior aspects of the thoracic ribcage. As a result, both abdominal telescoping potentiometer rods were bent. In view of the very extensive vehicle intrusion and seat rotation into the lateral path of the dummy's motion, and the armrest driving the abdominal ribs upward into the thoracic ribcage in excess of the informal IARV limit by a considerable margin, the test facility judged that the extent of occupant compartment penetration was beyond any dummy's capability to withstand without structural damage. However, it must be noted that while the abdominal potentiometers were bent and needed replacement, they appeared to measure accurately beyond the informal IARV

limit. Both abdominal ribs sustained no permanent damage in the crash test. Upon release from the jammed position, the ribs snapped back into place and remained in use throughout all further vehicle tests.

Dummies 020 and 056 were each used in the vehicle test program in six MDB crashes alternating as drivers and rear passengers, and in three pole test crashes. In addition, dummies 020 and 056 were exposed as driver and passenger, respectively, in an NCAP MDB crash at a test speed of 62 km/h. In that severe test, the shoulder potentiometer of dummy 020 was found to be bent. Investigation as to the cause indicated that a set screw, controlling the rotational stiffness of the pivoting mechanism of the potentiometer body, was over-tightened and exceeded the torque specification callouts in the SID–IIsD User Manual. Subsequent MDB tests of that dummy with proper torque setting did not produce any further potentiometer failures.

4a. Dummy Durability in Overload Sled Tests

Eight special durability tests were conducted at MCW to determine the dummy's structural integrity and ability to acquire useful responses under overload impact conditions. Table A3 provides a matrix for these tests and the types of exposures to which the SID–IIs dummy (033) was subjected. Details on test set-up, dummy seating and positioning may be found in the MCW report, *id.*

TABLE A3.—SPECIAL DURABILITY AND BIOFIDELITY OVERLOAD SLED TESTS AT MCW

Test #	Test ref. No.	Wall configuration	Padding	Speed m/s	Arm position	Dummy	Damage
1	SD292	Flat Wall	Yes	6.7	Down	033	
2	SD294	Flat Wall	No	6.7	Down	033	
3	SD295	Pelvis Offset	Yes	6.7	Up	033	
4	SD296	Pelvis Offset	No	6.7	Up	033	
5	SD298	Thorax Offset	No	6.7	Up	033	
6	SD301	Flat Wall	Yes	8.9	Down	033	
7	SD302	Flat Wall	No	8.9	Down	033	Bent Pot.
8	SD303	Abdomen Offset	No	6.7	Up	033	

Durability tests were conducted at 8.9 m/s for tests SD301 and SD302 and at 6.7 m/s for tests SD292, SD294, SD295, SD296, SD298, and SD303. Test speed tolerance was maintained to ± 0.19 m/s. Some minor gouging of the shoulder damping material was observed at the location of the posterior rib guide in all of the tests. The first four tests were conducted using the original shoulder rib guide adapted from the FRG, which permitted some perceptible rib guide gouging. The last four tests used a modified FRG rib guide with rounded edges, which resulted in barely perceptible gouging (shallow and smooth scraping like indications). There was no damage to any of the displacement potentiometers, except for test 302 conducted at 8.9 m/s into a flat rigid wall, in which the shoulder rib contacted the rib stop. The potentiometer became slightly bent during this impact, but continued to measure the shoulder displacement accurately beyond the informal IARV limit without signal disruption. This was verified by re-qualifying the dummy and checking to see that the shoulder displacement was within the certification specifications.

Maximum thoracic rib displacement of 61 mm was measured in test SD298 (6.7 m/s rigid wall thoracic offset test) and maximum abdominal rib displacement of 60.1 mm occurred in test SD301 (6.7 m/s rigid wall abdominal offset test). The corresponding ribs contacted the rib stops, as indicated by the contact switches, but there was no flat-topping in the displacement-time trace.

In sum, the dummy demonstrated good durability in overload impact conditions.

4b. Overload of Thorax and Abdomen Responses in Pendulum Tests

To further assess the dummy's durability at elevated impact loads, two 5 m/s pendulum impacts were administered to the thorax and abdomen of dummy 020. In both tests, the dummy's arm was removed. The 5 m/s impact tests represent an impact energy higher by 35% than the 4.3 m/s standard qualification test. Tables A4 and A5 show thorax and abdomen rib deflection and upper and lower spine acceleration values measured in these tests. While, as expected, none of the spine acceleration values were near any of the IARV limits, both thorax and abdominal rib deflections were either at or above the injury limit.

TABLE A4.—SID–IIsD RESPONSES IN THORAX OVERLOAD 5 M/S IMPACTS

[Dummy's arm removed]

Probe loading and dummy response	Measurement	IARV
Pendulum Probe Acceleration (g)	18.2	.....
Upper Thorax Rib Deflection (mm)	43.4	38

TABLE A4.—SID–IIsD RESPONSES IN THORAX OVERLOAD 5 M/S IMPACTS—Continued

[Dummy's arm removed]

Probe loading and dummy response	Measurement	IARV
Middle Thorax Rib Deflection (mm)	50.3	38
Lower Thorax Rib Deflection (mm)	46.1	38
Upper Spine Y Acceleration (g)	17.8	n/a
Lower Spine Y Acceleration (g)	10.5	82

TABLE A5.—SID–IIsD RESPONSES IN ABDOMINAL OVERLOAD 5 M/S IMPACTS

[Dummy's arm removed]

Probe loading and dummy response	Measurement	IARV
Pendulum Probe Acceleration (g)	16.2	.....
Upper Abdominal Rib Deflection (mm)	48.3	45
Lower Abdominal Rib Deflection (mm)	45.6	45

TABLE A5.—SID–IIsD RESPONSES IN ABDOMINAL OVERLOAD 5 M/S IMPACTS—Continued

[Dummy's arm removed]

Probe loading and dummy response	Measurement	IARV
Upper Spine Y Acceleration (g)	8.7	n/a
Lower Spine Y Acceleration (g)	17.0	82

In addition, the agency conducted three biofidelity tests with dummy 020 to provide test response values for the calculation of the NHTSA based biofidelity ranking. The first shoulder impact test followed the procedure outlined in ''Shoulder Biofidelity Lateral Shoulder Pendulum Test,'' reported by Bolte et al. (John H. Bolte IV, et al., ''Shoulder Impact Response and Injury Due to Lateral and Oblique Loading,'' #2003–22033, Proceedings 47th Stapp Conference 2003.) The tests consisted of a dummy seated on the calibration bench and its shoulder impacted laterally at a speed of 4.3 m/s with an impactor that had a mass of 13.98 kg and a 20 cm wide by 15 cm high ram face, covered with a 5 cm thick piece of Arcel 730 foam. The impactor was centered on the shoulder/arm pivot with the arm down. The second and third shoulder impacts followed the procedure described in ISO 9790, section 4.1 for the shoulder and section 4.2 for the thorax. A 14 kg pendulum (150 mm diameter and rigid face) was used in these tests in lieu of the ISO specified 23 kg pendulum for the ES–2 dummy. The shoulder impact probe for the second test was centered on the shoulder/arm pivot with the arm down at a speed of 4.5 m/s, and for the third test the impactor was centered on the middle thorax rib with the dummy's arm set 90 degrees forward (horizontal) at a speed of 4.3 m/s.

Results from the biofidelity tests are summarized in Table A6. As expected, the Bolte test data indicate a lower level of dummy responses due to the impactor's face being covered by a 5 cm thick Arcel 730 foam. The ISO 9790 test data are similar in trends but of elevated responses from the results of the Bolte dummy shoulder tests. The dummy experienced neither structural nor functional damage in these tests.

TABLE A6.—SUMMARY OF IMPACT RESPONSES IN BIOFIDELITY IMPACT TESTS

Biofidelity Test Series	Bolte shoulder test*	ISO 9790 Sect. 4.1&2	
		Shoulder test 1	Thorax test 1
Pendulum Impact Speed (m/s)	4.3	4.5	4.3
Pendulum Probe Force (kN)	2.0	2.7	2.2
Shoulder Fx (N)	38.2	82.3	127.7
Shoulder Fy (N)	1002.9	1256.2	1208.4
Shoulder Fz (N)	223.8	236.9	809.6
Shoulder Rib X Acceleration (g)	15.9	31.9	24.3
Shoulder Rib Y Acceleration (g)	96.5	167.8	148.4
Shoulder Rib Z Acceleration (g)	54.2	79.1	149.7
Shoulder Rib Deflection (mm)	25.2	33.5	15.7
Upper Thorax Rib Deflection (mm)	11.2	16.9	14.6
Middle Thorax Rib Deflection (mm)	10.1	16.6	17.3
Lower Thorax Rib Deflection (mm)	6.3	13.7	20.1
Upper Thorax Rib X Acceleration (g)	12.9	15.4	14.8
Upper Thorax Rib Y Acceleration (g)	49.6	125.4	46.8
Middle Thorax Rib X Acceleration (g)	4.4	8.1	20.4
Middle Thorax Rib Y Acceleration (g)	47.3	67.19	98.9
Lower Thorax Rib X Acceleration (g)	6.8	10.1	19.7
Lower Thorax Rib Y Acceleration (g)	41.9	43.2	123.7
Upper Spine X Acceleration (g)	2.5	3.6	3.2
Upper Spine Y Acceleration (g)	17.2	22.6	22.8
Lower Spine X Acceleration (g)	1.6	2.9	3.4
Lower Spine Y Acceleration (g)	8.4	13.6	15.4

* Procedure in Stapp Conference Paper #2003–22033.

b. Comparison of SID–IIsD With SID–IIsC Reported by Alliance

In its docket comments (Docket 17694 and 18865), the Alliance included damage rates for the SID–IIsC dummy evaluated by its member companies. Table A7 provides a summary of these damage rates, as well as those the agency experienced with the SID–IIsD. The Alliance noted 7.8 dummy damages per 100 crash applications. The comparable damage rate for the SID–IIsD in agency testing is 5.8 per 100. Based on the six ribs and telescoping potentiometer units per dummy, the SID–IIsD had a damage rate of zero for ribs and 1.2 per 100 for the potentiometers. Comparable Alliance damage rates are 0.7 for the ribs and 0.4 for telescoping potentiometers. Inasmuch as the impact intensities of the Alliance reported dummy exposures are not known, it is difficult to establish direct comparability between Build Level C and Build Level D dummies. However, the agency observed failures rates for the Build Level D might be far lower, since damage was experienced by only one abdominal set of telescoping potentiometers associated with a vehicle crush deformation that is considerably in excess of the anticipated IARVs.

TABLE A7.—DAMAGE TO SID–IISD DUMMIES IN AGENCY AND OSRP REPORTED SID–IISC DUMMIES IN SLED AND VEHICLE CRASH TESTS

	Exposures			
	No. of SID–IIsDs in sled & vehicle tests*	No of ribs or potentiometers*	SID–IIsC**	No of ribs & related**
#Reported	69	414	283	1698
# With damage	4	5	22	31
% With damage	5.8	1.2	7.8	1.8
# Indications ribs leaving the guides	1	2	3	4
% Indications ribs leaving the guides	1.5	0.5	1.1	0.2
# With specific damage				
Damping material damaged	4	NA	NA	6
Damping material de-bonded	5.8	0	NA	6
Ribs bent	0	0	NA	12
% Ribs bent	0	0	NA	0.7
Potentiometer shaft bent	4	5	NA	NA
Potentiometer shaft broken	0	0	NA	6
% Potentiometers bent or broken	5.8	1.2	NA	0.4
Other			NA	3

* Agency tests based on 10 Pole tests; 8 MDB tests (2 dummies per test); 2 MDB tests at NCAP speed (2 dummies per test); 8 Bio/Durability sled tests; 20 R/R sled tests at MCW; 5 R/R sled tests at TRC (2 dummies per test).
** OSRP data.

III. Summary of Appendix A

The SID–IIsD dummy's durability was examined in at least four types of impact applications. The dummy was found to be extremely durable and capable of yielding measurements for occupant injury assessment over a wide range of impact conditions. While we do not have information at this time to estimate the service life for this dummy, the service life appears to be comparable or better than other crash dummies. We conclude that the SID–IIsD is well suited for use in research, FMVSS and NCAP test programs.

List of Subjects in 49 CFR Part 572

Incorporation by reference, Motor vehicle safety.

■ In consideration of the foregoing, NHTSA amends 49 CFR Part 572 as follows:

PART 572—ANTHROPOMORPHIC TEST DUMMIES

■ 1. The authority citation for Part 572 continues to read as follows:

Authority: 49 U.S.C. 322, 30111, 30115, 30117 and 30166; delegation of authority at 49 CFR 1.50.

■ 2. 49 CFR part 572 is amended by adding a new subpart V consisting of §§ 572.190 through 572.200 to read as follows:

Subpart V, SID–IIsD Side Impact Crash Test Dummy, Small Adult Female

Sec.
572.190 Incorporated materials.
572.191 General description.
572.192 Head assembly.
572.193 Neck assembly.
572.194 Shoulder.
572.195 Thorax with arm.
572.196 Thorax without arm.
572.197 Abdomen.
572.198 Pelvis acetabulum.
572.199 Pelvis iliac.
572.200 Instrumentation and test conditions.
Appendix A to Subpart V of Part 572—Figures

Subpart V, SID–IIsD Side Impact Crash Test Dummy, Small Adult Female

§ 572.190 Incorporated materials.

(a) The following materials are hereby incorporated into this Subpart by reference:

(1) A parts/drawing list entitled, ''Parts/Drawings List, Part 572 Subpart V, SID–IIsD, September 2006,''

(2) A drawings and inspection package entitled ''Drawings and Specifications for SID–IIsD Small Female Crash Test Dummy, Part 572 Subpart V, September 2006,'' consisting of:

(i) Drawing No. 180–0000, SID–IIsD Complete Assembly;

(ii) Drawing No. 180–1000, 6 Axis Head Assembly;

(iii) Drawing No. 180–2000, Neck Assembly;

(iv) Drawing No. 180–3000, Upper Torso Assembly;

(v) Drawing No. 180–3005, Washer, Clamping;

(vi) Drawing No. 9000021, Screw, SHCS ⅜–16 x 1 NYLOK;

(vii) Drawing No. 900005, Screw, SHCS ¼–20 x ⅝ NYLOK;

(viii) Drawing No. 180–4000, Lower Torso Assembly Complete;

(ix) Drawing No. 180–5000–1, Complete Leg Assembly, Left;

(x) Drawing No. 180–5000–2, Complete Leg Assembly, Right;

(xi) Drawing No. 180–6000–1, Arm Assembly Left Molded;

(xii) Drawing No. 180–6000–2, Arm Assembly Right Molded; and,

(xiii) Drawing No. 180–9000, SID–IIsD Headform Assembly.

(3) A procedures manual entitled, ''Procedures for Assembly, Disassembly, and Inspection (PADI) of the SID–IIsD Side Impact Crash Test Dummy, September 2006,'' incorporated by reference in § 572.191;

(4) SAE Recommended Practice J211, Rev. Mar 95 ''Instrumentation for Impact Tests—Part 1—Electronic Instrumentation''; and,

(5) SAE J1733 of 1994–12, ''Sign Convention for Vehicle Crash Testing.''

(b) The Director of the Federal Register approved the materials incorporated by reference in accordance with 5 U.S.C. 552(a) and 1 CFR part 51. Copies of the materials may be inspected at the National Archives and Records Administration (NARA), and in electronic format through the DOT docket management system (DMS). For information on the availability and inspection of this material at NARA, call 202–741–6030, or go to: *http://www.archives.gov/federal_register/code_of_federal_regulations/ibr_locations.html.* For information on the availability and inspection of this material at the DOT DMS, call 1–800–647–5527, or go to: *http://dms.dot.gov.*

(c) The incorporated materials are available as follows:

(1) The Parts/Drawings List, Part 572 Subpart V, SID–IIsD, September 2006, referred to in paragraph (a)(1) of this section, the package entitled Drawings and Specifications for SID–IIsD Small Female Crash Test Dummy, Part 572 Subpart V, September 2006, referred to in paragraph (a)(2) of this section, and the PADI document referred to in paragraph (a)(3) of this section, are available in electronic format through the DOT docket management system and in paper format from Leet-Melbrook, Division of New RT, 18810 Woodfield Road, Gaithersburg, MD 20879, telephone (301) 670–0090.

(2) The SAE materials referred to in paragraphs (a)(4) and (a)(5) of this section are available from the Society of Automotive Engineers, Inc., 400 Commonwealth Drive, Warrendale, PA 15096, telephone 1–877–606–7323.

§ 572.191 General description.

(a) The SID–IIsD Side Impact Crash Test Dummy, small adult female, is defined by:

(1) The drawings and specifications contained in the ''Drawings and Specifications for SID–IIsD Small Female Crash Test Dummy, Part 572 Subpart V, September 2006,'' which includes the technical drawings and specifications described in Drawing 180–0000, the titles of which are listed in Table A;

TABLE A

Component assembly	Drawing No.
6 Axis Head Assembly	180–1000
Neck Assembly	180–2000
Upper Torso Assembly	180–3000
Washer, Clamping	180–3005
Lower Torso Assembly Complete	180–4000
Complete Leg Assembly, Left	180–5000–1
Complete Leg Assembly, Right	180–5000–2
Arm Assembly Left Molded	180–6000–1
Arm Assembly Right Molded	180–6000–2

(2) The ''Parts/Drawing List, Part 572 Subpart V, SID–IIsD,'' dated September 2006 and containing 7 pages,

(3) A listing of available transducers-crash test sensors for the SID–IIsD Side Impact Crash Test Dummy, 5th percentile adult female, is shown in drawing 180–0000 sheet 2 of 5, dated September 2006,

(4) ''Procedures for Assembly, Disassembly, and Inspection (PADI) of the SID–IIsD Side Impact Crash Test Dummy, September 2006,'' and,

(5) Sign convention for signal outputs reference document SAE J1733 Information Report, titled ''Sign Convention for Vehicle Crash Testing,'' dated July 12, 1994, incorporated by reference in § 572.200(k).

(b) Exterior dimensions of the SID–IIsD Small Adult Female Side Impact Crash Test Dummy are shown in drawing 180–0000 sheet 3 of 5, dated September 2006.

(c) Weights and center of gravity locations of body segments are shown in drawing 180–0000 sheet 4 of 5, dated September 2006.

(d) Adjacent segments are joined in a manner such that, except for contacts existing under static conditions, there is no additional contact between metallic elements of adjacent body segments throughout the range of motion.

(e) The structural properties of the dummy are such that the dummy conforms to this Subpart in every respect before use in any test similar to that set forth in Standard 214, Side Impact Protection (49 CFR 571.214).

§ 572.192 Head assembly.

(a) The head assembly consists of the head (180–1000) and a set of three (3) accelerometers in conformance with specifications in 49 CFR 572.200(d) and mounted as shown in drawing 180–0000 sheet 2 of 5. When tested to the procedure specified in paragraph (b) of this section, the head assembly shall meet performance requirements specified in paragraph (c) of this section.

(b) *Test procedure.* The head shall be tested according to the procedure specified in 49 CFR 572.112(a).

(c) *Performance criteria.*

(1) When the head assembly is dropped from either the right or left lateral incline orientations in accordance with procedure in § 572.112(a), the measured peak resultant acceleration shall be between 115 g and 137 g;

(2) The resultant acceleration-time curve shall be unimodal to the extent that oscillations occurring after the main acceleration pulse shall not exceed 15% (zero to peak) of the main pulse;

(3) The longitudinal acceleration vector (anterior-posterior direction) shall not exceed 15 g.

§ 572.193 Neck assembly.

(a) The neck assembly consists of parts shown in drawing 180–2000. For purposes of this test, the neck assembly is mounted within the headform assembly (180–9000) as shown in Figure V1 in Appendix A to this subpart. When subjected to the test procedure specified in paragraph (b) of this section, the neck-headform assembly shall meet the performance requirements specified in paragraph (c) of this section.

(b) *Test procedure.*

(1) Soak the assembly in a test environment as specified in 49 CFR 572.200(j);

(2) Attach the neck-headform assembly, as shown in Figure V2–A or V2–B in Appendix A to this subpart, to the 49 CFR Part 572 pendulum test fixture (Figure 22, 49 CFR 572.33) in either the left or right lateral impact orientations, respectively, so that the midsagittal plane of the neck-headform assembly is vertical and at right angle (90 ± 1 degrees) to the plane of motion of the pendulum longitudinal centerline;

(3) Release the pendulum from a height sufficient to achieve a velocity of 5.57 ± 0.06 m/s measured at the center of the pendulum accelerometer, as shown in 49 CFR Part 572 Figure 15, at the instant the pendulum makes contact with the decelerating mechanism;

(4) The neck flexes without the neck-headform assembly making contact with any object;

(5) Time zero is defined as the time of initial contact between the pendulum mounted striker plate and the pendulum deceleration mechanism;

(6) Allow a period of at least thirty (30) minutes between successive tests on the same neck assembly.

(c) *Performance Criteria.*

(1) The pendulum deceleration pulse is characterized in terms of decrease in velocity as obtained by integrating the pendulum acceleration output from time zero:

Time (ms)	Pendulum Delta–V (m/s)
10.0	−2.20 to −2.80
15.0	−3.30 to −4.10
20.0	−4.40 to −5.40
25.0	−5.40 to −6.10
>25.0 < 100	−5.50 to −6.20

(2) The maximum translation-rotation of the midsagittal plane of the headform disk (180–9061 or 9062) in the lateral direction measured, with the rotation transducers specified in 49 CFR 572.200(e) shall be 71 to 81 degrees with respect to the longitudinal axis of the pendulum (see Figure V2–C in Appendix A to this subpart) occurring between 50 and 70 ms from time zero;

(3) Peak occipital condyle moment shall not be higher than −36 Nm and not lower than −44 Nm. The moment measured by the upper neck load cell (Mx) shall be adjusted by the following formula: Mx(oc) [1]= Mx+0.01778Fy;

[1] Mx(oc) is the moment at occipital condyle (Newton-meters) and Fy is the lateral shear force (Newtons) measured by the load cell.

(4) The decaying moment shall cross the 0 Nm line after peak moment between 102 ms-126 ms after time zero.

§ 572.194 Shoulder.

(a) The shoulder structure is part of the upper torso assembly shown in drawing 180–3000. For the shoulder impact test, the dummy is tested as a complete assembly (drawing 180–0000). The dummy is equipped with T1 laterally oriented accelerometer as specified in 49 CFR 572.200(d), and deflection potentiometer as specified in 180–3881 configured for shoulder and installed as shown in drawing 180–0000 sheet 2 of 5. When subjected to the test procedure as specified in paragraph (b) of this section, the shoulder shall meet the performance requirements of paragraph (c) of this section.

(b) *Test procedure.* (1) Soak the dummy assembly (180–0000) in a test environment as specified in 49 CFR 572.200(j).

(2) Seat the dummy, outfitted with the torso jacket (180–3450) and cotton underwear pants on a certification bench, specified in Figure V3 in Appendix A to this subpart, the seat pan and the seatback surfaces of which are covered with a 2 mm thick PTFE (Teflon) sheet;

(3) Align the outermost portion of the pelvis flesh of the impacted side of the seated dummy tangent to a vertical plane located within 10 mm of the side edge of the bench as shown in Figure V4–A in Appendix A to this subpart, while the midsagittal plane of the dummy is in vertical orientation.

(4) Push the dummy at the knees and at mid-sternum of the upper torso with just sufficient horizontally oriented force towards the seat back until the back of the upper torso is in contact with the seat back.

(5) While maintaining the dummy's position as specified in paragraphs (b)(3) and (4) of this section, the top of the shoulder rib mount (drawing 180–3352) orientation in the fore-and-aft direction is 24.6 ± 2.0 degrees relative to horizontal, as shown in Figure V4–B in Appendix A to this subpart.

(6) Adjust orientation of the legs such that they are symmetrical about the mid-sagittal plane, the thighs touch the seat pan, the inner part of the right and left legs at the knees are as close as possible to each other, the heels touch the designated foot support surface and the feet are vertical and as close together as possible.

(7) Orient the arm to point forward at 90 degrees relative to the interior-superior orientation of the upper torso spine box incline.

(8) The impactor is specified in 49 CFR 572.200(a).

(9) The impactor is guided, if needed, so that at contact with the dummy's arm rotation centerline (ref. item 23 in drawing 180–3000) the impactor's longitudinal axis is within ± 1 degree of a horizontal plane and perpendicular to the midsagittal plane of the dummy. The centerpoint of the impactor face at contact is within 2 mm of the shoulder yoke assembly rotation centerline (drawing 180–3327), as shown in Figure V4–A in Appendix A to this subpart.

(10) The dummy's arm-shoulder is impacted at 4.4±0.1 m/s with the impactor meeting the alignment and contact point requirements of paragraph (b)(9) of this section.

(c) *Performance criteria.*

(1) While the impactor is in contact with the dummy's arm, the shoulder shall compress not less than 30 mm and not more than 37 mm measured by the potentiometer specified in (a);

(2) Peak lateral acceleration of the upper spine (T1) shall not be less than 17 g and not more than 19 g;

(3) Peak impactor acceleration shall be not less than 14 g and not more than 18 g.

§ 572.195 Thorax with arm.

(a) The thorax is part of the upper torso assembly shown in drawing 180–3000. For the thorax with arm impact test, the dummy is tested as a complete assembly (drawing 180–0000). The dummy's thorax is equipped with T1 and T12 laterally oriented accelerometers as specified in 49 CFR 572.200(d), and deflection potentiometers for the thorax and shoulder as specified in 180–3881, installed as shown in drawing 180–0000 sheet 2 of 5. When subjected to the test procedure as specified in paragraph (b) of this section, the thorax shall meet performance requirements of paragraph (c) of this section.

(b) *Test procedure.* (1) Soak the dummy assembly (180–0000) in a test environment as specified in 49 CFR 572.200(j).

(2) Seat the dummy, outfitted with the torso jacket (180–3450) and cotton underwear pants on a certification bench, specified in Figure V3, the seat pan and the seatback surfaces of which are covered with a 2-mm-thick PTFE (Teflon) sheet.

(3) Align the outermost portion of the pelvis flesh of the impacted side of the seated dummy tangent to a vertical plane located within 10 mm of the side edge of the bench as shown in Figure V5–A, while the midsagittal plane of the dummy is in vertical orientation.

(4) Push the dummy at the knees and at mid-sternum of the upper torso with just sufficient horizontally oriented force towards the seat back until the back of the upper torso is in contact with the seat back.

(5) While maintaining the dummy's position as specified in paragraphs (b)(3) and (4) of this section, the top of the shoulder rib mount (drawing 180–3352) orientation in the fore-and-aft direction is 24.6 ± 2.0 degrees relative to horizontal as shown in Figure V5–B in Appendix A to this subpart.

(6) Adjust orientation of the legs such that they are symmetrical about the mid-sagittal plane, the thighs touch the seat pan, the inner part of the right and left legs at the knees are as close as possible to each other, the heels touch the designated foot support surface and the feet are vertical and as close together as possible.

(7) Orient the arm downward to the lowest detent.

(8) The impactor is specified in 49 CFR 572.200(a).

(9) The impactor is guided, if needed, so that at contact with the dummy's arm, its longitudinal axis is within ±1 degree of a horizontal plane and perpendicular to the midsagittal plane of the dummy. The centerpoint of the impactor face is within 2 mm of the vertical midpoint of the second thoracic rib and coincident with a line parallel to the seat back incline passing through the center of the shoulder yoke assembly arm rotation pivot (drawing 180–3327), as shown in Figure V5–A in Appendix A to this subpart.

(10) The dummy's arm is impacted at 6.7 ± 0.1 m/s.

(c) *Performance criteria.*

(1) While the impactor is in contact with the dummy's arm, the thoracic ribs and the shoulder shall conform to the following range of deflections:

(i) Shoulder not less than 31 mm and not more than 40 mm;

(ii) Upper thorax rib not less than 26 mm and not more than 32 mm;

(iii) Middle thorax rib not less than 30 mm and not more than 36 mm;

(iv) Lower thorax rib not less than 32 mm and not more than 38 mm;

(2) Peak lateral acceleration of the upper spine (T1) shall not be less than 34 g and not more than 43 g, and the lower spine (T12) not less than 28 g and not more than 35 g;

(3) Peak impactor acceleration shall be not less than 31 g and not more than 36 g.

§ 572.196 Thorax without arm.

(a) The thorax is part of the upper torso assembly shown in drawing 180–3000. For this thorax test, the dummy is

tested as a complete assembly (drawing 180–0000) with the arm (180–6000) on the impacted side removed. The dummy's thorax is equipped with T1 and T12 laterally oriented accelerometers as specified in 49 CFR 572.200(d) and with deflection potentiometers for the thorax as specified in drawing 180–3881, installed as shown in drawing 180–0000 sheet 2 of 5. When subjected to the test procedure specified in paragraph (b) of this section, the thorax shall meet the performance requirements set forth in paragraph (c) of this section.

(b) *Test procedure.* (1) Soak the dummy assembly (180–0000) in a test environment as specified in 49 CFR 572.200(j).

(2) Seat the dummy, outfitted with the torso jacket (180–3450) and cotton underwear pants on a calibration bench, specified in Figure V3 in Appendix A to this subpart, the seat pan and the seatback surfaces of which are covered with a 2-mm-thick PTFE (Teflon) sheet.

(3) Align the outermost portion of the pelvis flesh of the impacted side of the seated dummy tangent to a vertical plane located within 25 mm of the side edge of the bench as shown in Figure V4–A, while the midsagittal plane of the dummy is in vertical orientation.

(4) Push the dummy at the knees and at mid-sternum of the upper torso with just sufficient horizontally oriented force towards the seat back until the back of the upper torso is in contact with the seat back.

(5) While maintaining the dummy's position as specified in paragraphs (b)(3) and (4) of this section, the top of the shoulder rib mount (drawing 180–3352) orientation in the fore-and-aft direction is 24.6 ± 2.0 degrees relative to horizontal, as shown in Figure V6–B in Appendix A to this subpart.

(6) Adjust orientation of the legs such that they are symmetrical about the mid-sagittal plane, the thighs touch the seat pan, the inner part of the right and left legs at the knees are as close as possible to each other, the heels touch the designated foot support surface and the feet are vertical and as close together as possible.

(7) The impactor is specified in 49 CFR 572.200(a).

(8) The impactor is guided, if needed, so that at contact with the thorax, its longitudinal axis is within 1 degree of a horizontal plane and perpendicular to the midsagittal plane of the dummy. The centerpoint of the impactor face is within 2 mm of the vertical midpoint of the second thorax rib and coincident with a line parallel to the seat back incline passing through the center of the shoulder yoke assembly arm rotation pivot (drawing 180–3327), as shown in Figure V6–A in Appendix A to this subpart.

(9) The dummy's thorax is impacted at 4.3 ± 0.1 m/s.

(c) *Performance criteria.*

(1) While the impactor is in contact with the dummy's thorax, the ribs shall conform to the following range of deflections:

(i) Upper thorax rib not less than 33 mm and not more than 40 mm;

(ii) Middle thorax rib not less than 39 mm and not more than 45 mm;

(iii) Lower thorax rib not less than 36 mm and not more than 43 mm;

(2) Peak acceleration of the upper spine (T1) shall not be less than 14g and not more than 17 g and the lower spine (T12) not less than 7 g and not more than 10 g;

(3) Peak lateral impactor acceleration shall not be less than 14 g and not more than 18 g.

§ 572.197 Abdomen.

(a) The abdomen assembly is part of the upper torso assembly (180–3000) and is represented by two ribs (180–3368) and two linear deflection potentiometers (180–3881). The abdomen test is conducted on the complete dummy assembly (180–0000) with the arm (180–6000) on the impacted side removed. The dummy is equipped with a lower spine laterally oriented accelerometer as specified in 49 CFR 572.200(d) and deflection potentiometers specified in drawing 180–3881, installed as shown in sheet 2 of drawing 180–0000. When subjected to the test procedure as specified in paragraph (b) of this section, the abdomen shall meet performance requirements of paragraph (c) of this section.

(b) *Test procedure.* (1) Soak the dummy assembly (180–0000) in a test environment as specified in 49 CFR 572.200(j).

(2) Seat the dummy, outfitted with the torso jacket (180–3450) and cotton underwear pants on a calibration bench, specified in Figure V3, the seat pan and the seatback surfaces of which are covered with a 2 mm thick PTFE (Teflon) sheet.

(3) Align the outermost portion of the pelvis flesh of the impacted side of the seated dummy tangent to a vertical plane located within 25 mm of the side edge of the bench as shown in Figure V7–A in Appendix A to this subpart, while the midsagittal plane of the dummy is in vertical orientation.

(4) Push the dummy at the knees and at mid-sternum of the upper torso with just sufficient horizontally oriented force towards the seat back until the back of the upper torso is in contact with the seat back.

(5) While maintaining the dummy's position as specified in paragraph (b)(3) and (4) of this section, the top of the shoulder rib mount (drawing 180–3352) orientation in the fore-and-aft direction is 24.6 ± 2.0 degrees relative to horizontal, as shown in Figure V7–B in Appendix A to this subpart);

(6) Adjust orientation of the legs such that they are symmetrical about the mid-sagittal plane, the thighs touch the seat pan, the inner part of the right and left legs at the knees are as close as possible to each other, the heels touch the designated foot support surface and the feet are vertical and as close together as possible;

(7) The impactor is specified in 49 CFR 572.200(b);

(8) The impactor is guided, if needed, so that at contact with the abdomen, its longitudinal axis is within ± 1 degree of a horizontal plane and perpendicular to the midsagittal plane of the dummy and the centerpoint of the impactor's face is within 2 mm of the vertical midpoint between the two abdominal ribs and coincident with a line parallel to the seat back incline passing through the center of the shoulder yoke assembly arm rotation pivot (drawing 180–3327), as shown in Figure V7–A in Appendix A to this subpart;

(9) The dummy's abdomen is impacted at 4.4 ± 0.1 m/s.

(c) *Performance criteria.* (1) While the impact probe is in contact with the dummy's abdomen, the deflection of the upper abdominal rib shall be not less than 39 mm and not more than 47 mm, and the lower abdominal rib not less than 37 mm and not more than 46 mm.

(2) Peak acceleration of the lower spine (T12) laterally oriented accelerometer shall be not less than 11 g and not more than 14 g;

(3) Peak impactor acceleration shall be not less than 12 g and not more than 16 g.

§ 572.198 Pelvis acetabulum.

(a) The acetabulum is part of the lower torso assembly shown in drawing 180–4000. The acetabulum test is conducted by impacting the side of the lower torso of the assembled dummy (drawing 180–0000). The dummy is equipped with a laterally oriented pelvis accelerometer as specified in 49 CFR 572.200(d), acetabulum load cell SA572–S68, mounted as shown in sheet 2 of 5 of drawing 180–0000, and an unused and certified pelvis plug (180–4450). When subjected to the test procedure as specified in paragraph (b) of this section, the pelvis shall meet

performance requirements of paragraph (c) of this section.

(b) *Test procedure.* (1) Soak the dummy assembly (180–0000) in a test environment as specified in 49 CFR 572.200(j).

(2) Seat the dummy, without the torso jacket (180–3450) and without cotton underwear pants, as shown in Figure V8–A in Appendix A to this subpart, on a calibration bench, specified in Figure V3 in Appendix A to this subpart, with the seatpan and the seatback surfaces covered with a 2-mm-thick PTFE (Teflon) sheet;

(3) Align the outermost portion of the pelvis flesh of the impacted side of the seated dummy tangent to a vertical plane located within 10 mm of the side edge of the bench as shown in Figure V8–A in Appendix A to this subpart, while the midsagittal plane of the dummy is in vertical orientation.

(4) Push the dummy at the knees and at mid-sternum of the upper torso with just sufficient horizontally oriented force towards the seat back until the back of the upper torso is in contact with the seat back.

(5) While maintaining the dummy's position as specified in paragraphs (b)(3) and (4) of this section, the top of the shoulder rib mount (drawing 180–3352) orientation in the fore-and-aft direction is 24.6 ± 1.0 degrees relative to horizontal, as shown in Figure V8–B in Appendix A to this subpart;

(6) Adjust orientation of the legs such that they are symmetrical about the mid-sagittal plane, the thighs touch the seat pan, the inner part of the right and left legs at the knees are as close as possible to each other, the heels touch the designated foot support surface and the feet are vertical and as close together as possible.

(7) Rotate the arm downward to the lowest detent.

(8) The impactor is specified in 49 CFR 572.200(a).

(9) The impactor is guided, if needed, so that at contact with the pelvis, its longitudinal axis is within ±1 degree of a horizontal plane and perpendicular to the midsagittal plane of the dummy. The centerpoint of the impactor's face is in line within 2 mm of the longitudinal centerline of the ¼-20x½ flat head cap screw through the center of the acetabulum load cell (SA572–S68), as shown in Figure V8–A in Appendix A to this subpart;

(10) The dummy's pelvis is impacted at the acetabulum at 6.7 ± 0.1 m/s.

(c) *Performance criteria.* While the impactor is in contact with the pelvis:

(1) Peak acceleration of the impactor is not less than 38 g and not more than 47 g;

(2) Peak lateral acceleration of the pelvis is not less than 41 g and not more than 50 g;

(3) Peak acetabulum force is not less than 3.8 kN and not more than 4.6 kN.

§ 572.199 Pelvis iliac.

(a) The iliac is part of the lower torso assembly shown in drawing 180–4000. The iliac test is conducted by impacting the side of the lower torso of the assembled dummy (drawing 180–0000). The dummy is equipped with a laterally oriented pelvis accelerometer as specified in 49 CFR 572.200(d), and acetabulum load cell SA572–S68, mounted as shown in sheet 2 of 5 of drawing 180–0000. When subjected to the test procedure as specified in paragraph (b) of this section, the pelvis shall meet performance requirements of paragraph (c) of this section.

(b) *Test procedure.* (1) Soak the dummy assembly (180–0000) in a test environment as specified in 49 CFR 572.200(j).

(2) Seat the dummy, without the torso jacket and without cotton underwear pants, as shown in Figure V9–A in Appendix A to this subpart, on a flat, rigid, horizontal surface covered with a 2-mm-thick PTFE (Teflon) sheet.

(3) The legs are outstretched in front of the dummy such that they are symmetrical about the midsagittal plane, the thighs touch the seated surface, the inner part of the right and left legs at the knees are as close as possible to each other, and the feet are in full dorsiflexion and as close together as possible.

(4) The midsagittal plane of the dummy is vertical and superior surface of the lower half neck assembly load cell replacement (180–3815) in the lateral direction is within ±1 degree relative to the horizontal as shown in Figure V9–A.

(5) While maintaining the dummy s position as specified in paragraphs (b)(3) and (4) of this section, the top of the shoulder rib mount (180–3352) orientation in the fore-and-aft direction is within ±1.0 degrees relative to horizontal as shown in Figure V9–B in Appendix A to this subpart.

(6) The pelvis impactor is specified in 49 CFR 572.200(c).

(7) The dummy is positioned with respect to the impactor such that the longitudinal centerline of the impact probe is in line with the longitudinal centerline of the iliac load cell access hole and the 88.9 mm dimension of the probe's impact surface is aligned horizontally.

(8) The impactor is guided, if needed, so that at contact with the pelvis, the longitudinal axis of the impactor is within ±1 degree of a horizontal plane and perpendicular to the midsagittal plane of the dummy.

(9) The dummy s pelvis is impacted at the iliac location at 4.3 ± 0.1 m/s.

(c) *Performance criteria.* While the impactor is in contact with the pelvis:

(1) Peak lateral acceleration of the impactor is not less than 34 g and not more than 40 g;

(2) Peak lateral acceleration of the pelvis is not less than 27 g and not more than 33 g;

(3) Peak iliac force is not less than 3.7 kN and not more than 4.5 kN.

§ 572.200 Instrumentation and test conditions.

(a) The test probe for shoulder, lateral thorax, and pelvis-acetabulum impact tests is the same as that specified in 49 CFR 572.137(a) except that its impact face diameter is 120.70 ± 0.25 mm and it has a minimum mass moment of inertia of 3646 kg-cm^2.

(b) The test probe for the lateral abdomen impact test is the same as that specified in 572.137(a) except that its impact face diameter is 76.20 ± 0.25 mm and it has a minimum mass moment of inertia of 3646 kg-cm^2.

(c) The test probe for the pelvis-iliac impact tests is the same as that specified in 49 CFR 572.137(a) except that it has a rectangular flat impact surface 50.8 × 88.9 mm for a depth of at least 76 mm and a minimum mass moment of inertia of 5000 kg-cm^2.

(d) Accelerometers for the head, the thoracic spine, and the pelvis conform to specifications of SA572–S4.

(e) Rotary potentiometers for the neck-headform assembly conform to SA572–S51.

(f) Instrumentation and sensors conform to the Recommended Practice SAE J–211 (March 1995), Instrumentation for Impact Test, unless noted otherwise.

(g) All instrumented response signal measurements shall be treated to the following specifications:

(1) Head acceleration—digitally filtered CFC 1000;

(2) Neck-headform assembly translation-rotation—digitally filtered CFC 60;

(3) Neck pendulum, T1 and T12 thoracic spine and pelvis accelerations—digitally filtered CFC 180;

(4) Neck forces (for the purpose of occipital condyle calculation) and moments—digitally filtered at CFC 600;

(5) Pelvis, shoulder, thorax and abdomen impactor accelerations—digitally filtered CFC 180;

(6) Acetabulum and iliac wings forces—digitally filtered at CFC 600;

(7) Shoulder, thorax, and abdomen deflection—digitally filtered CFC 600.

(h) Mountings for the head, thoracic spine and pelvis accelerometers shall have no resonant frequency within a range of 3 times the frequency range of the applicable channel class;

(i) Leg joints of the test dummy are set at the force between 1 to 2 g, which just support the limb's weight when the limbs are extended horizontally forward. The force required to move a limb segment does not exceed 2 g throughout the range of the limb motion.

(j) Performance tests are conducted, unless specified otherwise, at any temperature from 20.6 to 22.2 degrees C. (69 to 72 degrees F.) and at any relative humidity from 10% to 70% after exposure of the dummy to those conditions for a period of 3 hours.

(k) Coordinate signs for instrumentation polarity shall conform to the Sign Convention For Vehicle Crash Testing, Surface Vehicle Information Report, SAE J1733, 1994–12 (refer to § 572.191(a)(5)).

Appendix A to Subpart V of Part 572—Figures

BILLING CODE 4910–59–P

FIGURE V1
NECK ATTACHED TO HEADFORM ASSEMBLY

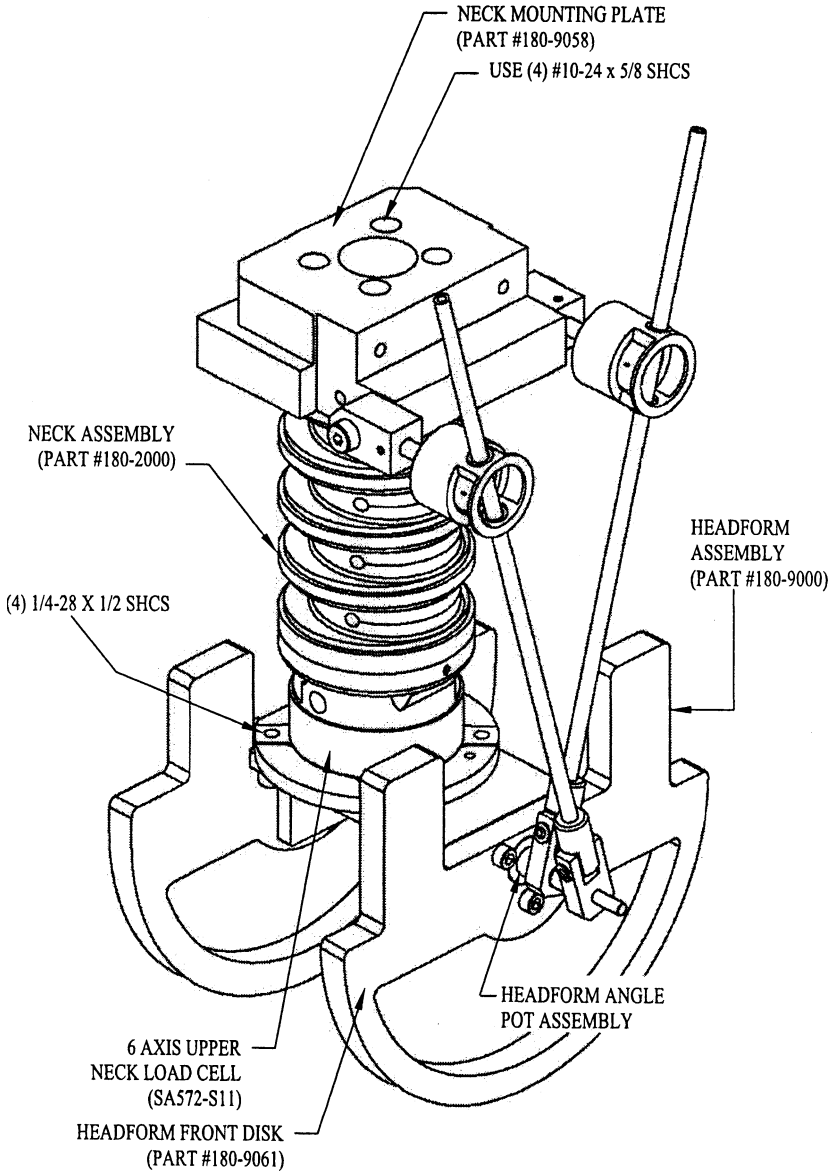

FIGURE V2-A
NECK/HEADFORM ATTACHED TO PENDULUM FOR LEFT-SIDE IMPACT

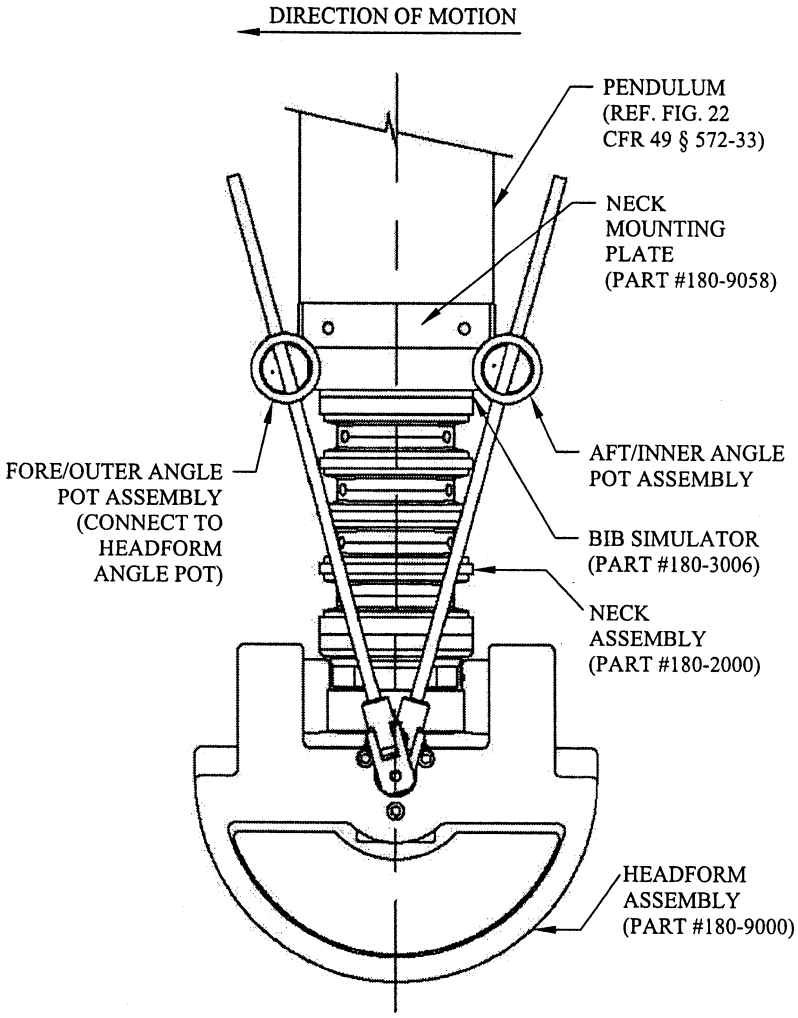

FIGURE V2-B
NECK/HEADFORM ATTACHED TO PENDULUM FOR RIGHT-SIDE IMPACT

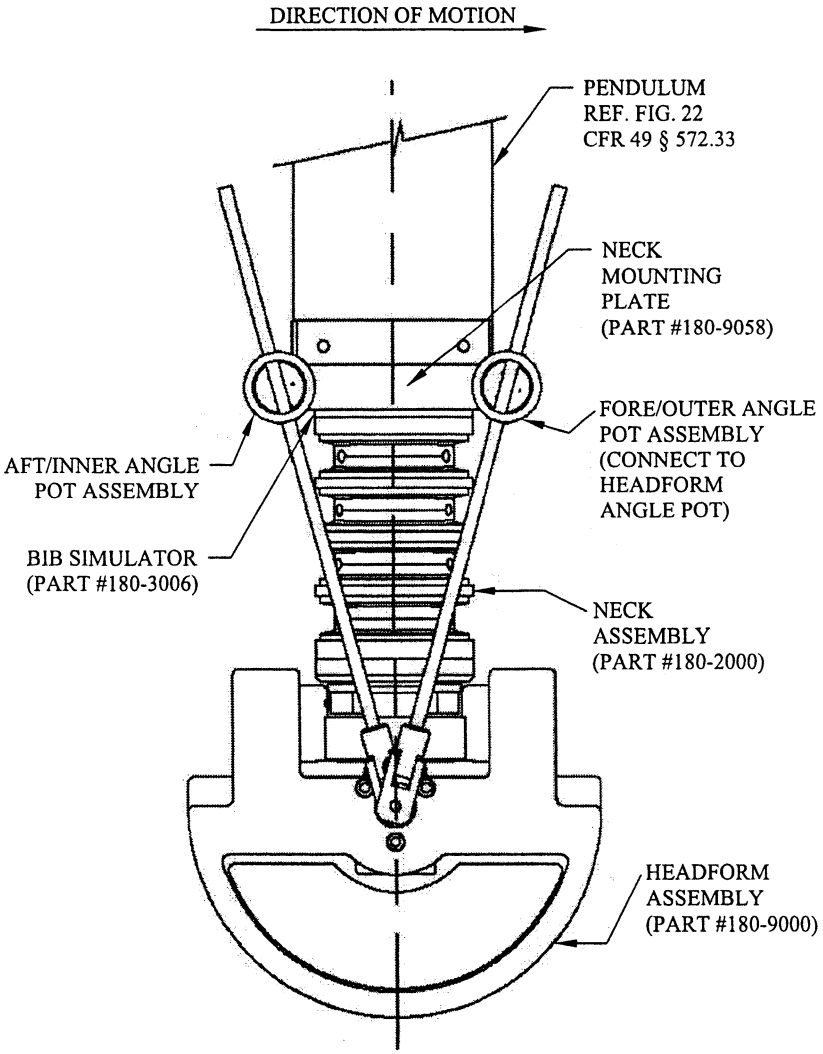

FIGURE V2-C
ANGLE MEASUREMENT WITH HEADFORM SET-UP

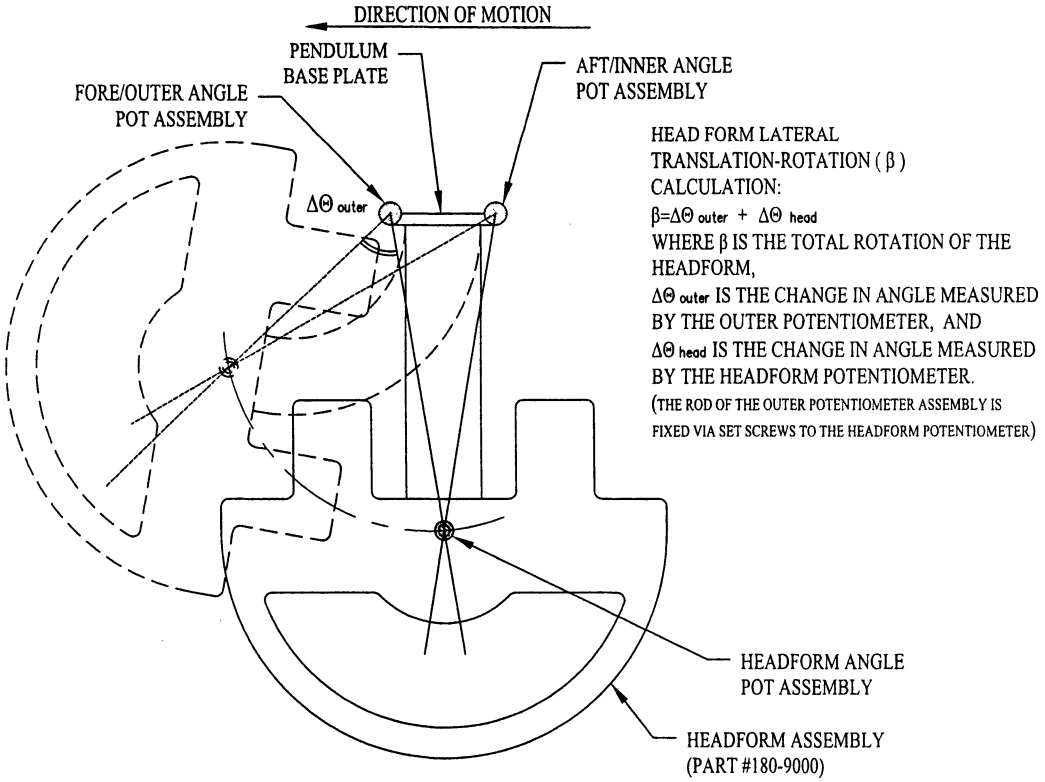

FIGURE V3
CERTIFICATION BENCH

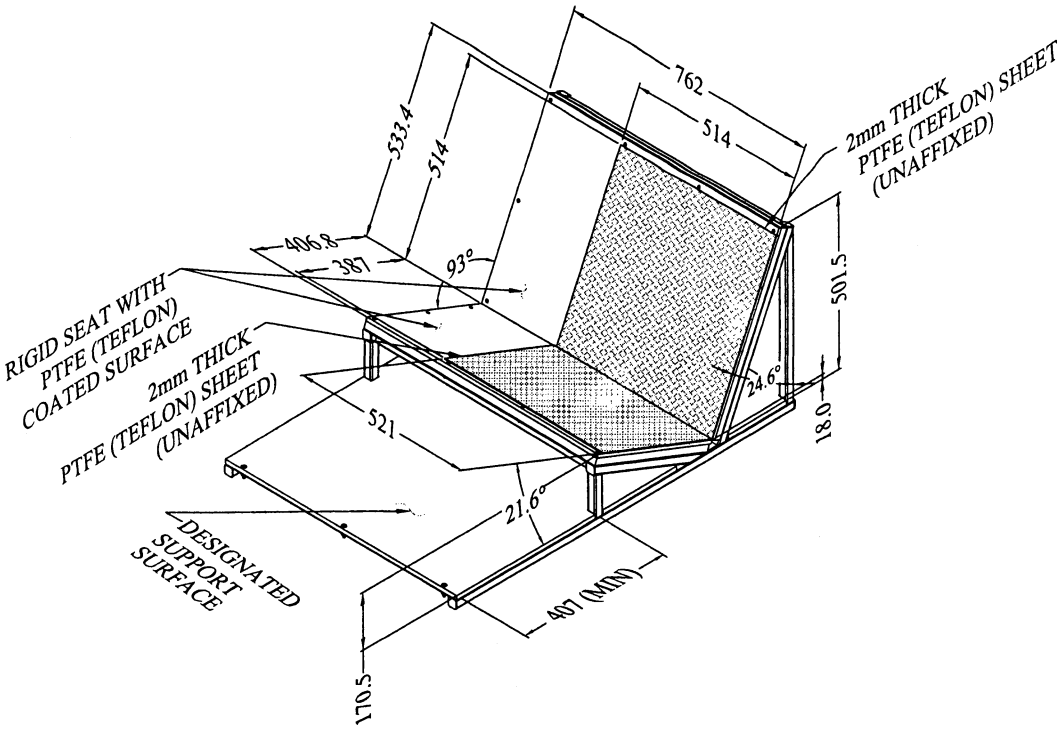

FIGURE V4-A
SHOULDER IMPACT

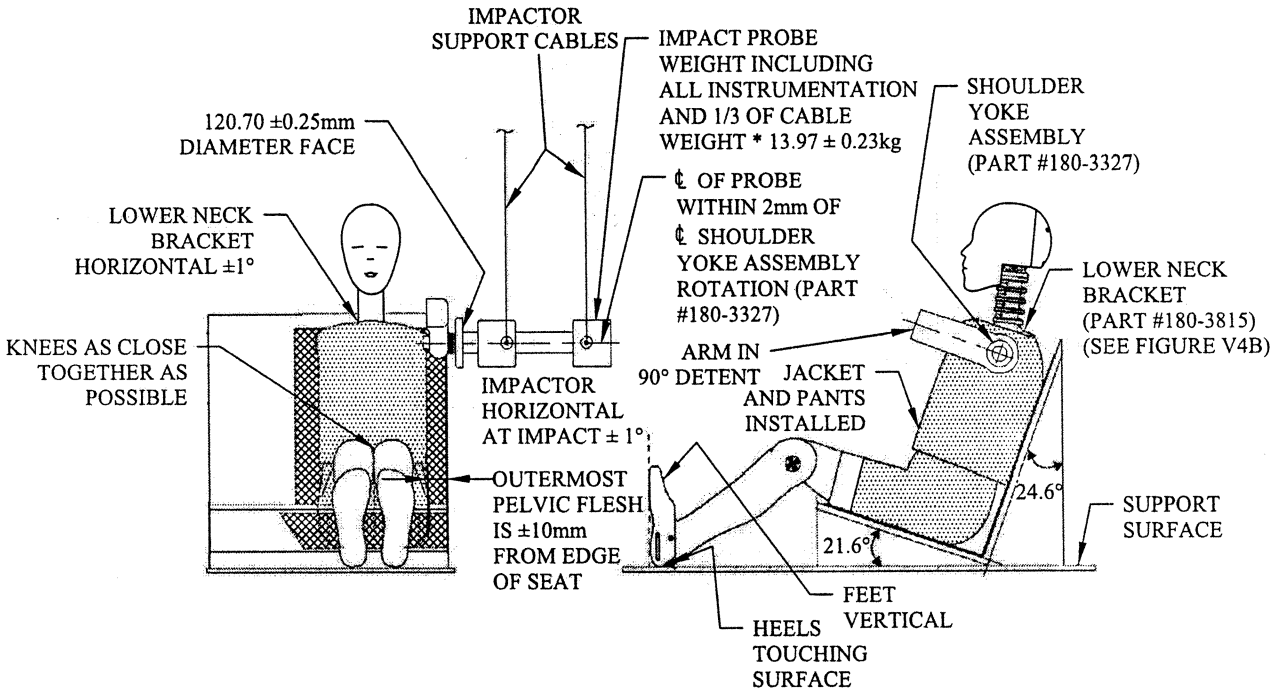

* 1/3 OF CABLE WEIGHT NOT TO EXCEED 5% OF THE TOTAL IMPACTOR PROBE WEIGHT

FIGURE V4-B
SHOULDER IMPACT
(NON-IMPACT SIDE VIEW)

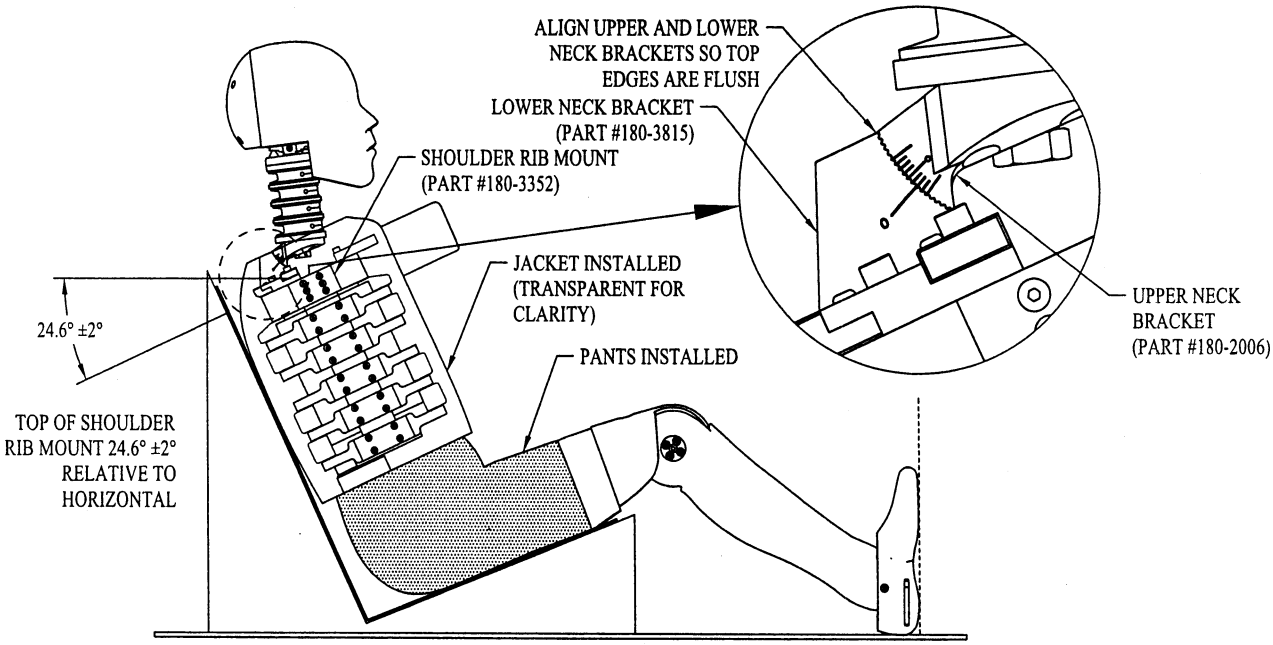

FIGURE V5-A
THORAX WITH ARM IMPACT

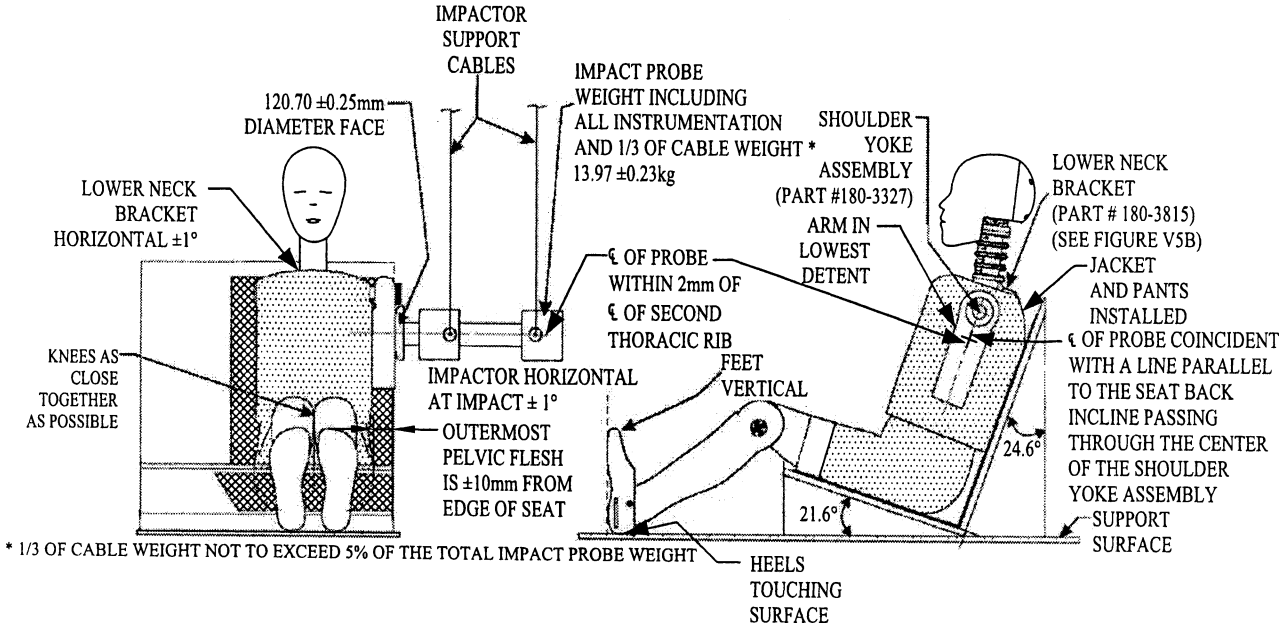

FIGURE V5-B
THORAX WITH ARM IMPACT
(NON-IMPACT SIDE VIEW)

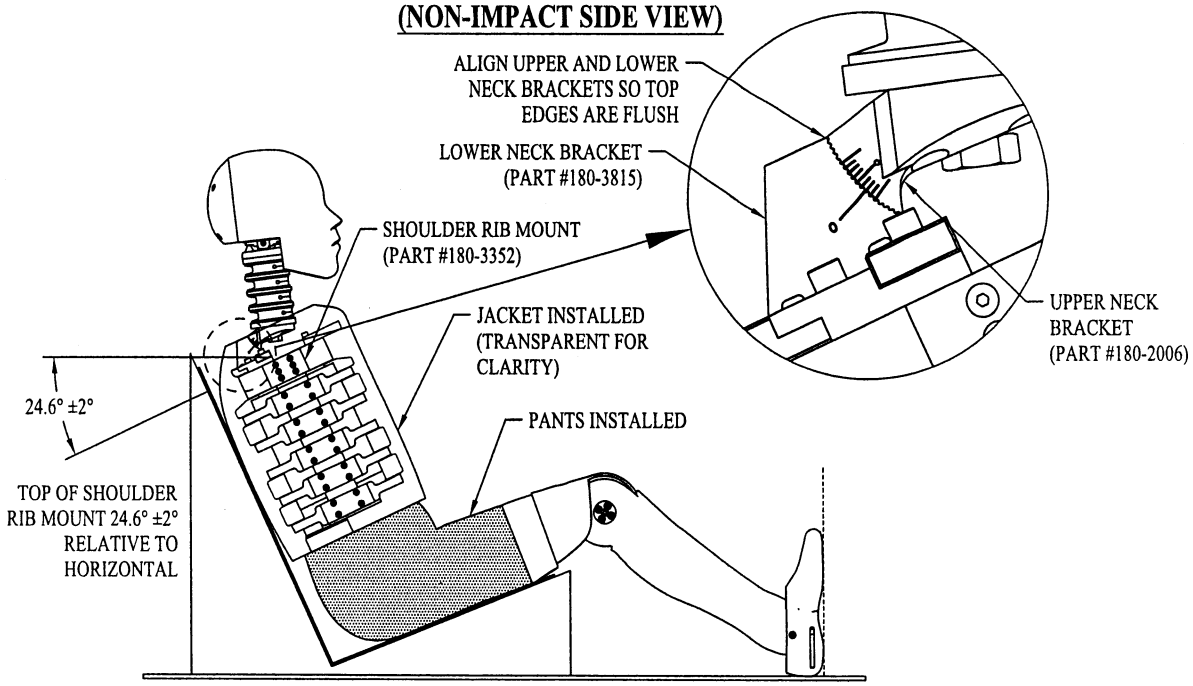

FIGURE V6-A
THORAX WITHOUT ARM IMPACT

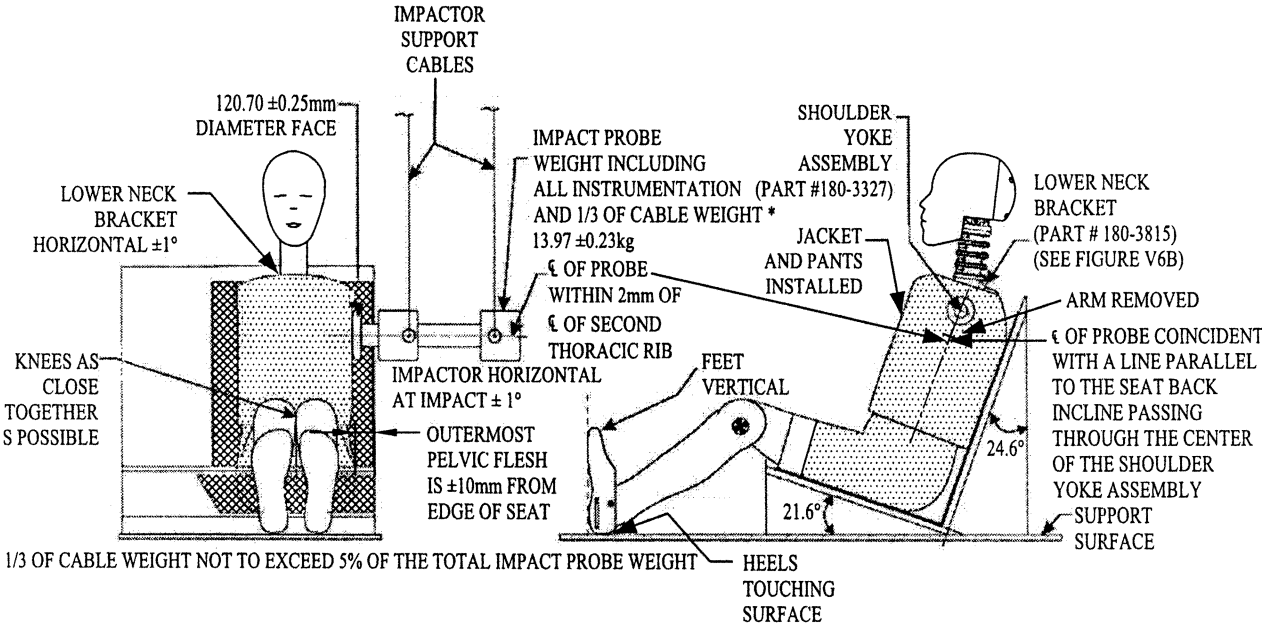

FIGURE V6-B
THORAX WITHOUT ARM IMPACT
(NON-IMPACT SIDE VIEW)

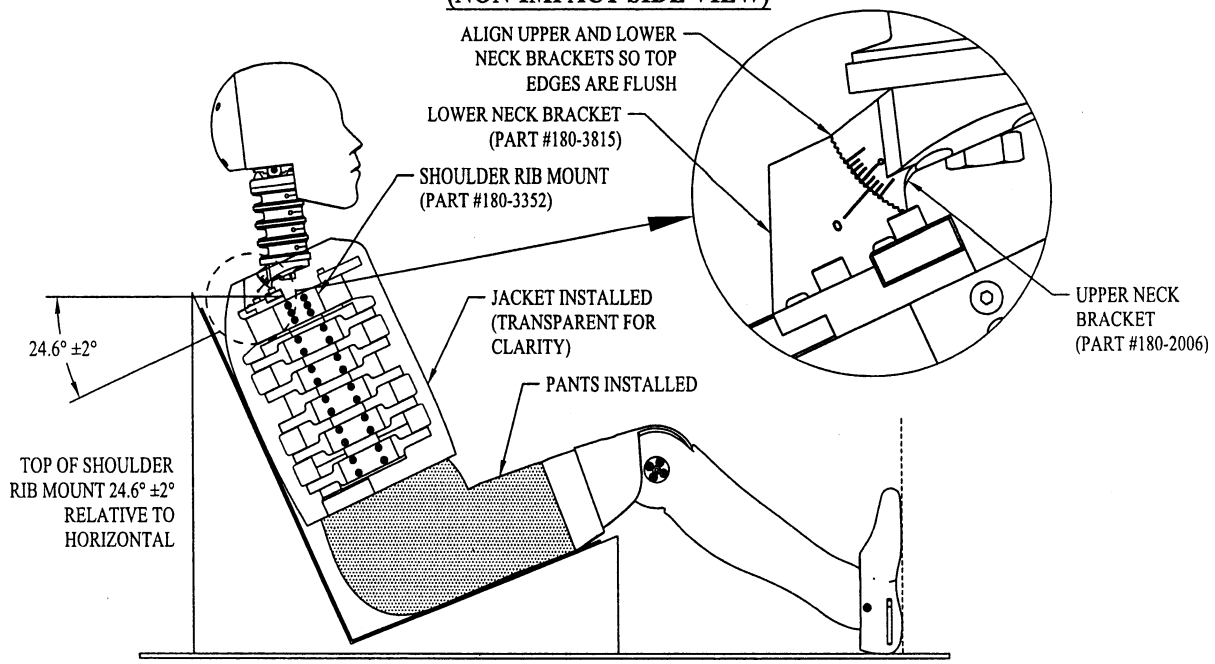

FIGURE V7-A
ABDOMEN IMPACT

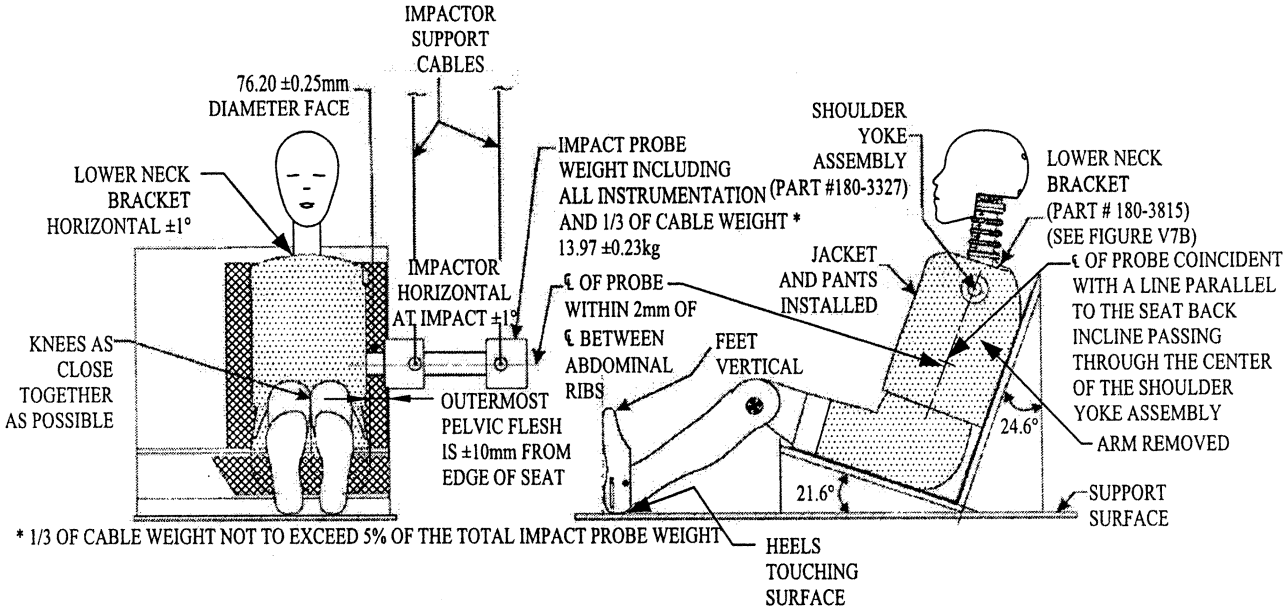

FIGURE V7-B
ABDOMEN IMPACT
(NON-IMPACT SIDE VIEW)

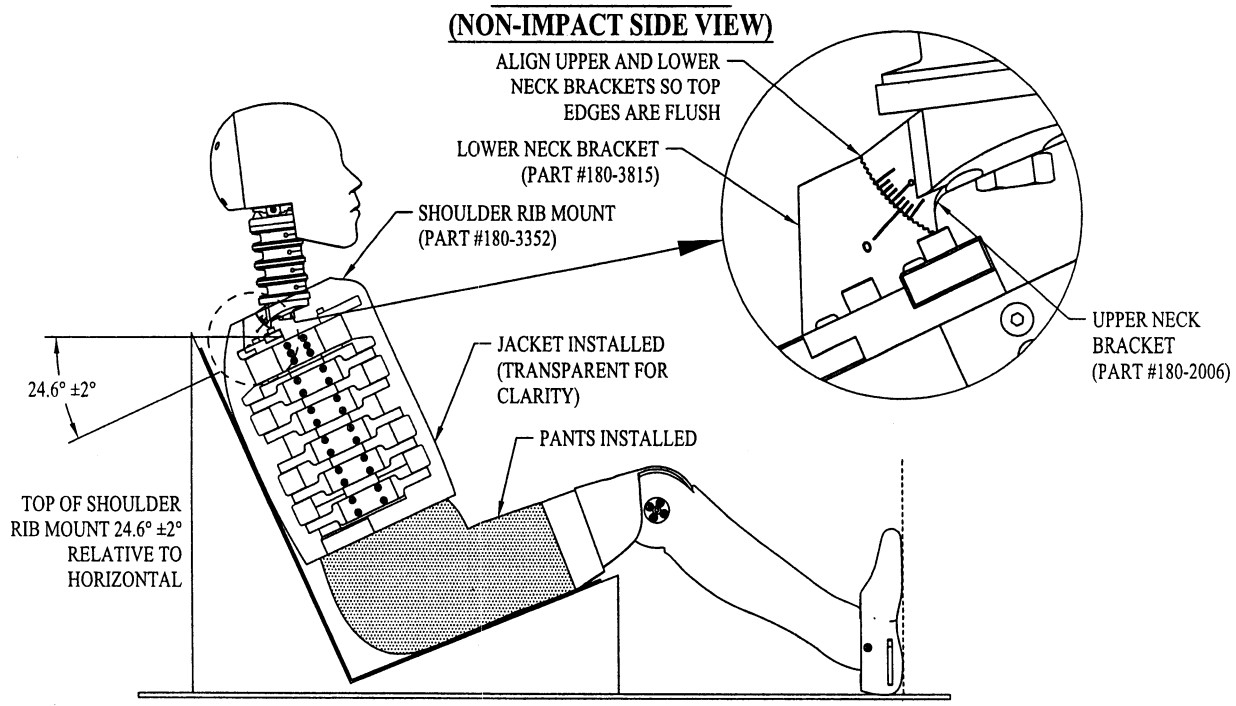

FIGURE V8-A
ACETABULUM IMPACT

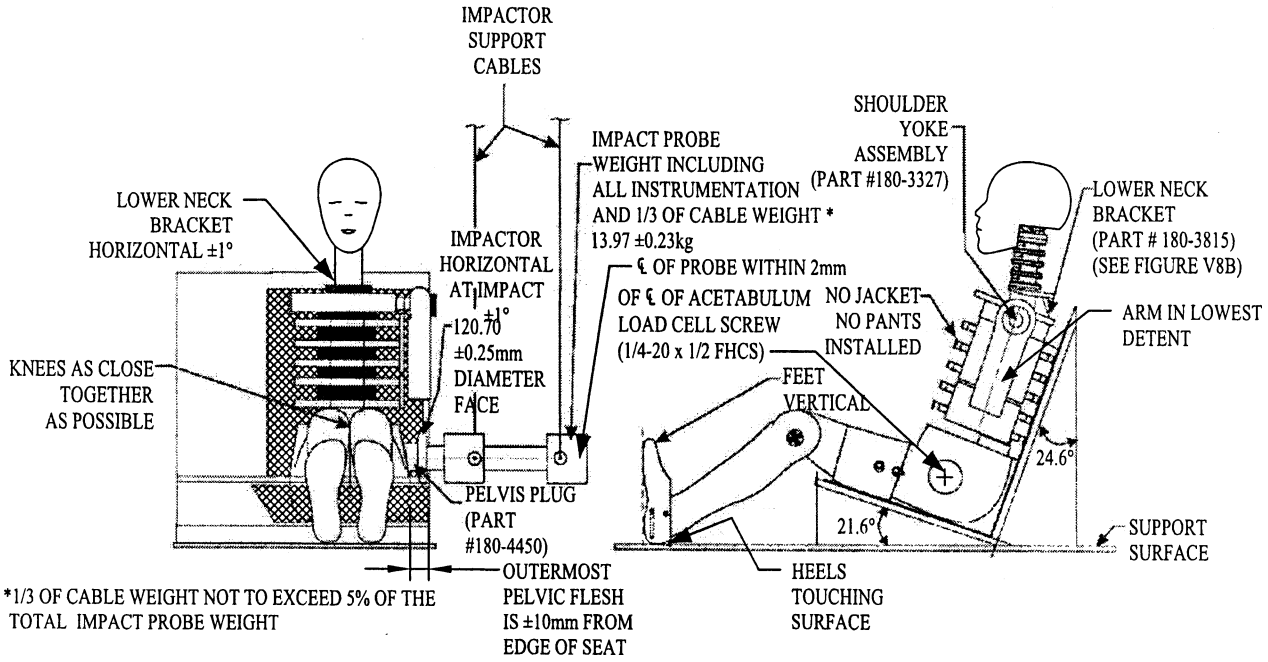

FIGURE V8-B
ACETABULUM IMPACT
(NON-IMPACT SIDE VIEW)

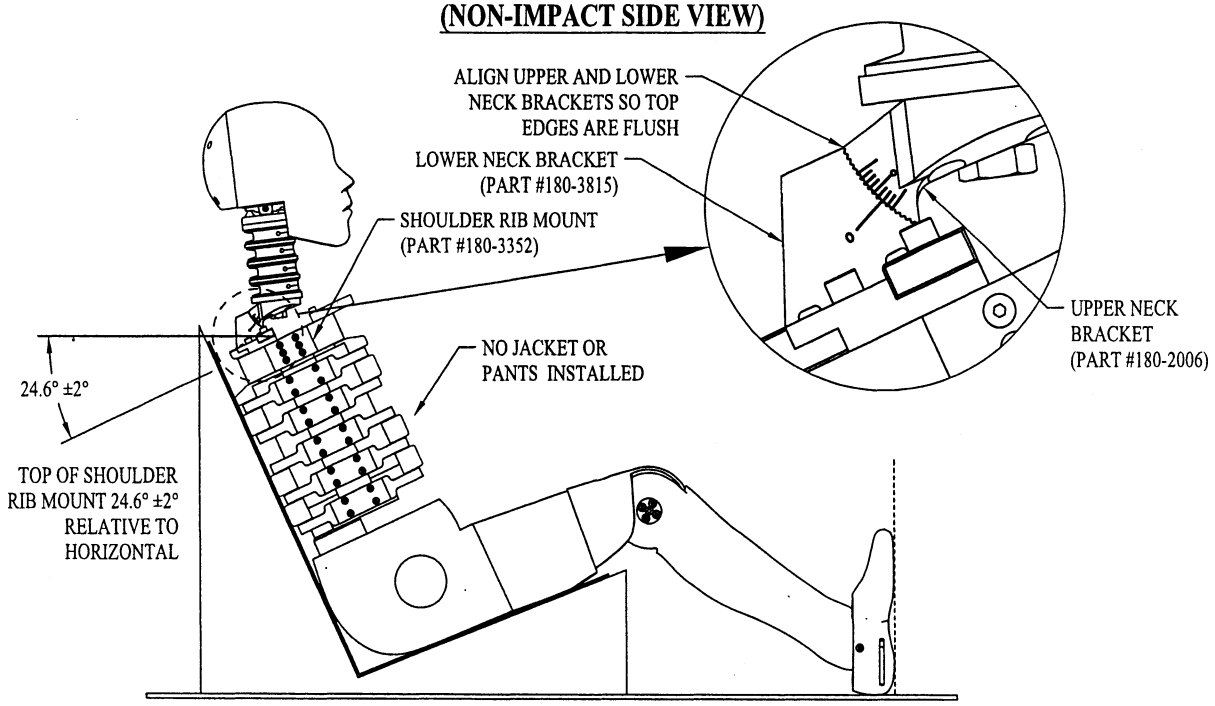

FIGURE V9-A
ILIAC IMPACT

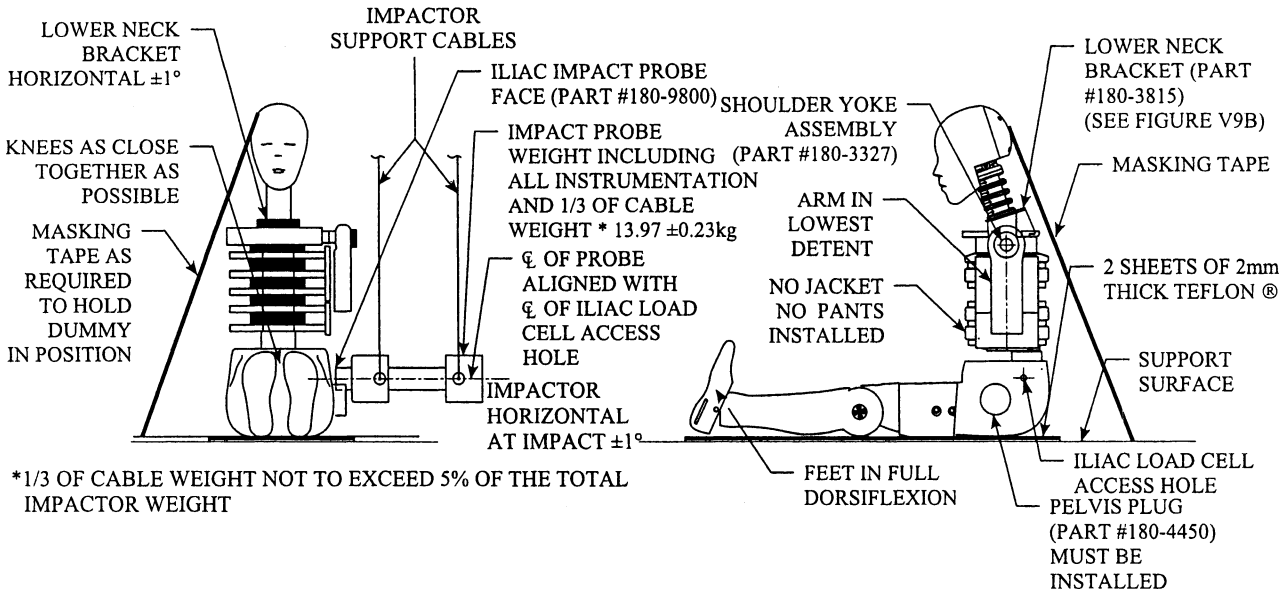

FIGURE V9-B
ILIAC IMPACT
(NON-IMPACT SIDE VIEW)

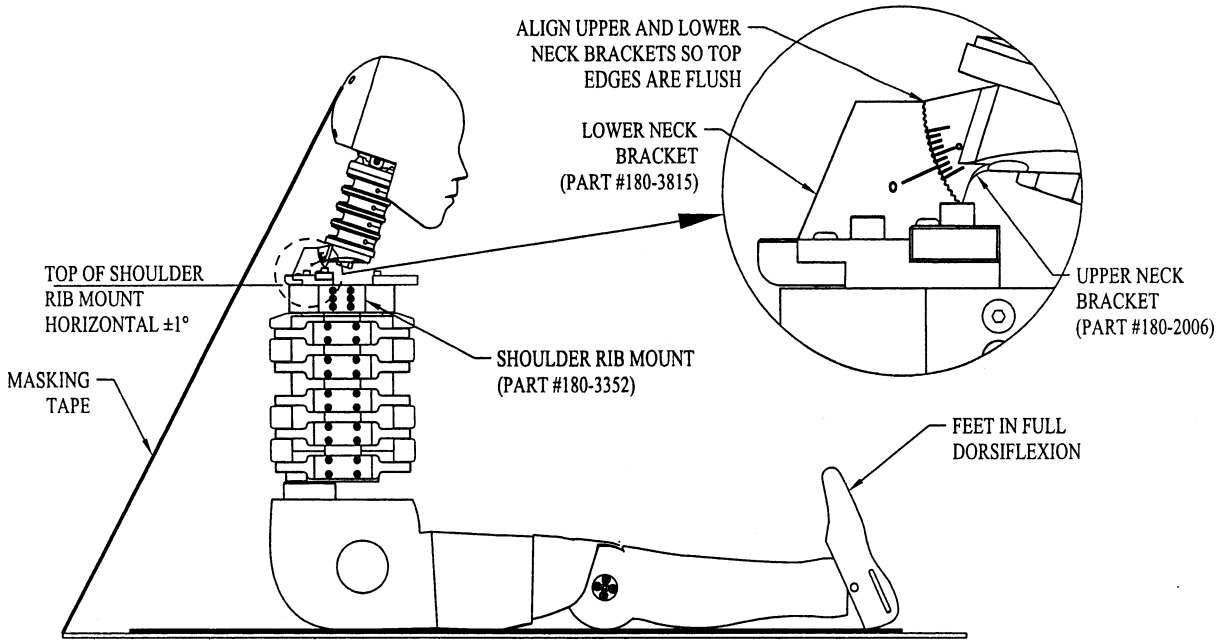

Issued: November 24, 2006.

Nicole R. Nason,

Administrator.

[FR Doc. 06–9555 Filed 12–13–06; 8:45 am]

BILLING CODE 4910–59–C