AUTHENTICATED U.S. GOVERNMENT INFORMATION GPO

Federal Register

12–14–06 Thursday
Vol. 71 No. 240 Dec. 14, 2006

Pages 75083–75406

The **FEDERAL REGISTER** (ISSN 0097–6326) is published daily, Monday through Friday, except official holidays, by the Office of the Federal Register, National Archives and Records Administration, Washington, DC 20408, under the Federal Register Act (44 U.S.C. Ch. 15) and the regulations of the Administrative Committee of the Federal Register (1 CFR Ch. I). The Superintendent of Documents, U.S. Government Printing Office, Washington, DC 20402 is the exclusive distributor of the official edition. Periodicals postage is paid at Washington, DC.

The **FEDERAL REGISTER** provides a uniform system for making available to the public regulations and legal notices issued by Federal agencies. These include Presidential proclamations and Executive Orders, Federal agency documents having general applicability and legal effect, documents required to be published by act of Congress, and other Federal agency documents of public interest.

Documents are on file for public inspection in the Office of the Federal Register the day before they are published, unless the issuing agency requests earlier filing. For a list of documents currently on file for public inspection, see *www.archives.gov.*

The seal of the National Archives and Records Administration authenticates the Federal Register as the official serial publication established under the Federal Register Act. Under 44 U.S.C. 1507, the contents of the **Federal Register** shall be judicially noticed.

The **Federal Register** is published in paper and on 24x microfiche. It is also available online at no charge as one of the databases on GPO Access, a service of the U.S. Government Printing Office.

The online edition of the **Federal Register** *www.gpoaccess.gov/nara,* available through GPO Access, is issued under the authority of the Administrative Committee of the Federal Register as the official legal equivalent of the paper and microfiche editions (44 U.S.C. 4101 and 1 CFR 5.10). It is updated by 6 a.m. each day the **Federal Register** is published and includes both text and graphics from Volume 59, Number 1 (January 2, 1994) forward.

For more information about GPO Access, contact the GPO Access User Support Team, call toll free 1-888-293-6498; DC area 202-512-1530; fax at 202-512-1262; or via e-mail at *gpoaccess@gpo.gov.* The Support Team is available between 7:00 a.m. and 9:00 p.m. Eastern Time, Monday–Friday, except official holidays.

The annual subscription price for the **Federal Register** paper edition is $749 plus postage, or $808, plus postage, for a combined **Federal Register, Federal Register** Index and List of CFR Sections Affected (LSA) subscription; the microfiche edition of the **Federal Register** including the **Federal Register** Index and LSA is $165, plus postage. Six month subscriptions are available for one-half the annual rate. The prevailing postal rates will be applied to orders according to the delivery method requested. The price of a single copy of the daily **Federal Register,** including postage, is based on the number of pages: $11 for an issue containing less than 200 pages; $22 for an issue containing 200 to 400 pages; and $33 for an issue containing more than 400 pages. Single issues of the microfiche edition may be purchased for $3 per copy, including postage. Remit check or money order, made payable to the Superintendent of Documents, or charge to your GPO Deposit Account, VISA, MasterCard, American Express, or Discover. Mail to: New Orders, Superintendent of Documents, P.O. Box 371954, Pittsburgh, PA 15250-7954; or call toll free 1-866-512-1800, DC area 202-512-1800; or go to the U.S. Government Online Bookstore site, see *bookstore.gpo.gov.*

There are no restrictions on the republication of material appearing in the **Federal Register.**

How To Cite This Publication: Use the volume number and the page number. Example: 71 FR 12345.

Postmaster: Send address changes to the Superintendent of Documents, Federal Register, U.S. Government Printing Office, Washington DC 20402, along with the entire mailing label from the last issue received.

SUBSCRIPTIONS AND COPIES

PUBLIC	
Subscriptions:	
Paper or fiche	**202–512–1800**
Assistance with public subscriptions	**202–512–1806**
General online information	**202–512–1530; 1–888–293–6498**
Single copies/back copies:	
Paper or fiche	**202–512–1800**
Assistance with public single copies	**1–866–512–1800 (Toll-Free)**
FEDERAL AGENCIES	
Subscriptions:	
Paper or fiche	**202–741–6005**
Assistance with Federal agency subscriptions	**202–741–6005**

Printed on recycled paper.

Contents

Federal Register

Vol. 71, No. 240

Thursday, December 14, 2006

Editorial Note: In the printed version of the **Federal Register** Table of Contents for Wednesday, December 13, 2006, the page numbers for all the entries were inadvertently replaced with **Federal Register** document numbers. A corrected table of contents appears after the Readers Aids section at the back of today's **Federal Register.**

Agency for Toxic Substances and Disease Registry
NOTICES
Hazardous substances releases and facilities:
Public health assessments and effects; list, 75254–75255

Agriculture Department
See Forest Service

Arts and Humanities, National Foundation
See National Foundation on the Arts and the Humanities

Centers for Disease Control and Prevention
NOTICES
Agency information collection activities; proposals, submissions, and approvals, 75255–75258
Committees; establishment, renewal, termination, etc.:
Mine Safety and Health Research Advisory Committee, 75258
Energy Employees Occupational Illness Compensation Program Act of 2000:
Special Exposure Cohort; employee class designations—
Dow Chemical Co., 75258

Coast Guard
NOTICES
Agency information collection activities; proposals, submissions, and approvals, 75268–75270

Commerce Department
See Foreign-Trade Zones Board
See International Trade Administration
See National Oceanic and Atmospheric Administration

Defense Department
PROPOSED RULES
Federal Acquisition Regulation (FAR):
Performance-based payments, 75186–75188
NOTICES
Federal Acquisition Regulation (FAR):
Agency information collection activities; proposals, submissions, and approvals, 75236

Education Department
NOTICES
Agency information collection activities; proposals, submissions, and approvals, 75237–75238

Employment and Training Administration
NOTICES
Adjustment assistance; applications, determinations, etc.:
AAR Cargo Systems, 75274
Dickten Masch Plastics, LLC, 75274
Hanesbrands, Inc., 75274–75275
Hercules Inc., 75275–75277
Northern Hardwoods, 75277
Roseburg Forest Products, 75277
Wright & Lato, Inc., 75277

Energy Department
See Federal Energy Regulatory Commission

Environmental Protection Agency
RULES
Air pollution; standards of performance for new stationary sources:
Electric utility steam generating units; nonsubmission of Clean Air Mercury Rule State plans, 75117–75121
Air programs:
Stratospheric ozone protection—
Methyl bromide; 2007 critical use exemption from phaseout, 75386–75406
PROPOSED RULES
Air pollutants, hazardous; national emission standards:
Halogenated solvent cleaning, 75182–75186
NOTICES
Agency information collection activities; proposals, submissions, and approvals, 75242–75244
Air pollution control:
State operating permits programs—
Alabama, 75245
Georgia, 75244–75246
Kentucky, 75244
Meetings:
Clean Air Act Advisory Committee, 75246
Pesticide registration, cancellation, etc.:
Acid copper chromate, 75246–75247
Reports and guidance documents; availability, etc.:
Wetlands; nutrient criteria technical guidance manual, 75247–75249

Executive Office of the President
See Presidential Documents
See Trade Representative, Office of United States

Export-Import Bank
NOTICES
Agency information collection activities; proposals, submissions, and approvals, 75249–75250

Federal Aviation Administration
RULES
Airworthiness directives:
Rolls-Royce Corp., 75108–75109
Schempp-Hirth Flugzeugbau GmbH, 75106–75108
Class D airspace, 75110
High altitude reporting points, 75110–75111
PROPOSED RULES
Airworthiness directives:
Airbus, 75145–75147

Federal Communications Commission
RULES
Common carrier services:
Telephone Consumer Protection Act; implementation—
Junk Fax Prevention Act; unwanted telephone solicitations, 75122

Federal Election Commission
NOTICES
Meetings; Sunshine Act, 75250

Federal Energy Regulatory Commission
NOTICES
Agency information collection activities; proposals, submissions, and approvals, 75238–75239
Meetings:
California Independent System Operator Corp.; technical conference, 75241
Midwest Independent Transmission System Operator, Inc., et al.; technical conference, 75241–75242
Applications, hearings, determinations, etc.:
Azusa, CA, 75240
Interstate Power & Light Co., 75240
Leadore Wind Farm, 75240–75241

Federal Highway Administration
RULES
Engineering and traffic operations:
Traffic control devices on Federal-aid and other streets and highways, 75111–75115
NOTICES
Meetings:
National Safe Routes to School Task Force, 75290–75293

Federal Housing Enterprise Oversight Office
RULES
Risk-based capital:
Test methodology and specifications; technical amendments, 75085–75106

Federal Reserve System
NOTICES
Meetings; Sunshine Act, 75250

Fish and Wildlife Service
PROPOSED RULES
Endangered and threatened species:
Critical habitat designations—
Monterey spineflower, 75189–75215
Findings on petitions, etc.—
Uinta Basin hookless cactus and Pariette cactus, 75215–75220
Migratory birds; revised list, 75188–75189

Food and Drug Administration
PROPOSED RULES
Human drugs:
Investigational drugs; sale, 75168–75181
Investigational drugs; treatment use; expanded access, 75147–75168

Foreign-Trade Zones Board
NOTICES
Applications, hearings, determinations, etc.:
Alabama
Arvin Meritor, Inc.; automotive parts manufacturing facility, 75228–75229

Forest Service
NOTICES
Agency information collection activities; proposals, submissions, and approvals, 75227
Environmental statements; notice of intent:
Malheur National Forest, OR, 75227–75228
Reports and guidance documents; availability, etc.:
Open Space Conservation Strategy and Implementation Plan, 75228

General Services Administration
PROPOSED RULES
Federal Acquisition Regulation (FAR):
Performance-based payments, 75186–75188
NOTICES
Federal Acquisition Regulation (FAR):
Agency information collection activities; proposals, submissions, and approvals, 75236

Geological Survey
NOTICES
Patent licenses; non-exclusive, exclusive, or partially exclusive:
Williamson & Associates, 75270

Health and Human Services Department
See Agency for Toxic Substances and Disease Registry
See Centers for Disease Control and Prevention
See Food and Drug Administration
See National Institutes of Health
NOTICES
Reports and guidance documents; availability, etc.:
Medicare appeals; controversy threshold amounts for 2007 CY; amount adjustment, 75250–75252
Pre-pandemic and pandemic influenza vaccine; prioritization, 75252–75253

Homeland Security Department
See Coast Guard

Housing and Urban Development Department
See Federal Housing Enterprise Oversight Office

Interior Department
See Fish and Wildlife Service
See Geological Survey
See National Park Service

Internal Revenue Service
NOTICES
Meetings:
Taxpayer Advocacy Panels, 75293–75294

International Trade Administration
NOTICES
Antidumping:
Carbon and alloy steel wire rod from—
Canada, 75229–75231
Cut-to-length carbon steel plate from—
Germany, 75231–75233
Committees; establishment, renewal, termination, etc.:
U.S.-Iraq Business Dialogue, 75233

Justice Department
NOTICES
Pollution control; consent judgments:
L.A.D. General Contractors et al., 75272
McCann Resources, Inc., et al., 75272
PSEG Fossil LLC, 75272–75273
Smurfit Stone Container Enterprises, Inc., 75273
Von Roll America, Inc., 75273–75274

Labor Department
See Employment and Training Administration

Legal Services Corporation
NOTICES
Meetings; Sunshine Act, 75277

Merit Systems Protection Board
NOTICES
Agency information collection activities; proposals, submissions, and approvals, 75277–75278

National Aeronautics and Space Administration
PROPOSED RULES
Federal Acquisition Regulation (FAR):
Performance-based payments, 75186–75188
NOTICES
Federal Acquisition Regulation (FAR):
Agency information collection activities; proposals, submissions, and approvals, 75236

National Archives and Records Administration
NOTICES
Agency information collection activities; proposals, submissions, and approvals, 75278–75279

National Foundation on the Arts and the Humanities
NOTICES
Reports and guidance documents; availability, etc.:
Federal antidiscrimination, whistleblower protection, and retaliation laws; No FEAR Act notice, 75279–75280

National Highway Traffic Safety Administration
RULES
Anthropomorphic test devices:
Occupant crash protection—
ES-2re side impact crash test dummy; 50th percentile adult male; specifications and qualification requirements, 75304–75342
SID-IIsFRG side impact crash test dummy, 5th percentile adult female, 75342–75384

National Institutes of Health
NOTICES
Inventions, Government-owned; availability for licensing, 75258–75260
Meetings:
National Cancer Institute, 75260
National Heart, Lung, and Blood Institute, 75260–75261
National Institute of Biomedical Imaging and Bioengineering, 75262–75263
National Institute of Child Health and Human Development, 75261
National Institute of Neurological Disorders and Stroke, 75262, 75264
National Institute on Alcohol Abuse and Alcoholism, 75261–75263
National Institute on Deafness and Other Communication Disorders, 75262, 75264–75265
National Institute on Drug Abuse, 75263–75264
Scientific Review Center, 75265–75268

National Oceanic and Atmospheric Administration
RULES
Fishery conservation and management:
Atlantic highly migratory species—
Atlantic commercial shark, 75122–75134
Northeastern United States fisheries—
Summer flounder, scup, and black sea bass, 75134–75144
PROPOSED RULES
Fishery conservation and management:
Caribbean, Gulf, and South Atlantic fisheries—
Gulf red snapper, 75220–75226
Northeastern U.S. fisheries—
Mid-Atlantic Fishery Management Council; hearings, 75226
NOTICES
Committees; establishment, renewal, termination, etc.:
Florida Keys National Marine Sanctuary Advisory Council, 75233
Exempted fishing permit applications, determinations, etc., 75233–75234
Reports and guidance documents; availability, etc.:
Marine mammal Unusual Mortality Events; designation criteria, 75234–75236

National Park Service
NOTICES
Concession contracts and permits:
Expiring contracts; extension, 75270–75271
National Natural Landmark designations:
Irvine Ranch, Orange County, CA, 75271

Nuclear Regulatory Commission
NOTICES
Agency information collection activities; proposals, submissions, and approvals, 75280
Environmental statements; availability, etc.:
Entergy Nuclear Operations, Inc., 75280–75281

Office of Federal Housing Enterprise Oversight
See Federal Housing Enterprise Oversight Office

Office of United States Trade Representative
See Trade Representative, Office of United States

Pension Benefit Guaranty Corporation
RULES
Single-employer plans:
Mortality assumptions, interest rate structure, etc., 75115–75117
PROPOSED RULES
Single-employer plans:
Mortality assumptions, interest rate structure, etc., 75181–75182

Presidential Documents
PROCLAMATIONS
Special observances:
Human Rights Day, Bill of Rights Day, and Human Rights Week (Proc. 8090), 75083–75084

Securities and Exchange Commission
NOTICES
Meetings; Sunshine Act, 75282
Self-regulatory organizations; proposed rule changes:
Depository Trust Co., 75282–75283
Fixed Income Clearing Corp., 75283–75284
National Association of Securities Dealers, Inc., 75285–75286
National Securities Clearing Corp., 75286–75287
Options Clearing Corp., 75287–75289

State Department
NOTICES
Agency information collection activities; proposals, submissions, and approvals, 75289

Committees; establishment, renewal, termination, etc.:
Overseas Schools Advisory Council, 75289
U.S National Commission for UNESCO, 75289–75290
Meetings:
Overseas Schools Advisory Council, 75290
U.S. National Commission for UNESCO, 75290

Surface Transportation Board
NOTICES
Railroad operation, acquisition, construction, etc.:
Pan Western Corp., 75293

Thrift Supervision Office
NOTICES
Reports and guidance documents; availability, etc.:
Concentration in Commercial Real Estate Lending, Sound Risk Management Practices, 75294–75301

Toxic Substances and Disease Registry Agency
See Agency for Toxic Substances and Disease Registry

Trade Representative, Office of United States
NOTICES
Trade Policy Staff Committee:
U. S.-Korea Free Trade Agreement—Environmental review, 75281–75282

Transportation Department
See Federal Aviation Administration
See Federal Highway Administration
See National Highway Traffic Safety Administration
See Surface Transportation Board

Treasury Department
See Internal Revenue Service
See Thrift Supervision Office

Veterans Affairs Department
NOTICES
Meetings:
Health Services Research and Development Service Merit Review Board, 75301–75302

Separate Parts In This Issue

Part II
Transportation Department, National Highway Traffic Safety Administration, 75304–75384

Part III
Environmental Protection Agency, 75386–75406

Reader Aids
Consult the Reader Aids section at the end of this issue for phone numbers, online resources, finding aids, reminders, and notice of recently enacted public laws.

To subscribe to the Federal Register Table of Contents LISTSERV electronic mailing list, go to http://listserv.access.gpo.gov and select Online mailing list archives, FEDREGTOC-L, Join or leave the list (or change settings); then follow the instructions.

CFR PARTS AFFECTED IN THIS ISSUE

A cumulative list of the parts affected this month can be found in the Reader Aids section at the end of this issue.

3 CFR

Proclamations:

8090 75083

12 CFR

1750 75085

14 CFR

39 (2 documents) 75106, 75108

71 (2 documents) 75110

Proposed Rules:

39 75145

21 CFR

Proposed Rules:

312 (2 documents) 75147, 75168

23 CFR

655 75111

29 CFR

4050 75115

4281 75115

Proposed Rules:

4050 75181

4281 75181

40 CFR

60 75117

62 75117

82 75386

Proposed Rules:

63 75182

47 CFR

64 75122

48 CFR

Proposed Rules:

32 75186

52 75186

49 CFR

572 (2 documents) 75304, 75342

50 CFR

635 75122

648 75134

Proposed Rules:

10 75188

17 (2 documents) 75189, 75215

622 75220

648 75226

Federal Register
Vol. 71, No. 240
Thursday, December 14, 2006

Presidential Documents

Title 3—

The President

Proclamation 8090 of December 8, 2006

Human Rights Day, Bill of Rights Day, and Human Rights Week, 2006

By the President of the United States of America

A Proclamation

Peace and justice prevail when people are free to speak, assemble, and worship, when their rights are protected, and when governments are accountable to their citizens. These blessings of freedom are guaranteed for Americans in the Bill of Rights of our Constitution. During Human Rights Day, Bill of Rights Day, and Human Rights Week, we celebrate the ideals of our founders and reaffirm the belief that freedom is the gift of God and the right of all mankind.

Just over six decades ago, the future of freedom seemed bleak, with only a small number of democracies around the world. Today, citizens of over 100 nations enjoy the blessings of democracy, and freedom is taking root in places where liberty had been unimaginable. The United States will continue to support the growth of democratic movements and institutions in every nation.

The advance of freedom is the story of our time, and new chapters are being written before our eyes. Around the world, freedom is replacing tyranny and giving men and women the opportunity to enjoy lives of purpose and dignity. Because Americans are committed to the God-given value of every life, we cherish the freedom of every person in every nation and strive to promote respect for human rights. By standing with those who desire liberty, we will help extend freedom to many who have not known it and lay the foundations of peace for generations to come.

NOW, THEREFORE, I, GEORGE W. BUSH, President of the United States of America, by virtue of the authority vested in me by the Constitution and laws of the United States, do hereby proclaim December 10, 2006, as Human Rights Day; December 15, 2006, as Bill of Rights Day; and the week beginning December 10, 2006, as Human Rights Week. I call upon the people of the United States to mark these observances with appropriate ceremonies and activities.

IN WITNESS WHEREOF, I have hereunto set my hand this eighth day of December, in the year of our Lord two thousand six, and of the Independence of the United States of America the two hundred and thirty-first.

[FR Doc. 06–9732
Filed 12–13–06; 8:45 am]
Billing code 3195–01–P

Rules and Regulations

Federal Register

Vol. 71, No. 240

Thursday, December 14, 2006

This section of the FEDERAL REGISTER contains regulatory documents having general applicability and legal effect, most of which are keyed to and codified in the Code of Federal Regulations, which is published under 50 titles pursuant to 44 U.S.C. 1510.

The Code of Federal Regulations is sold by the Superintendent of Documents. Prices of new books are listed in the first FEDERAL REGISTER issue of each week.

DEPARTMENT OF HOUSING AND URBAN DEVELOPMENT

Office of Federal Housing Enterprise Oversight

12 CFR Part 1750

RIN 2550–AA35

Risk-Based Capital Regulation Amendment

AGENCY: Office of Federal Housing Enterprise Oversight, HUD.

ACTION: Final rule.

SUMMARY: The Office of Federal Housing Enterprise Oversight (OFHEO) is amending Appendix A to Subpart B of 12 CFR part 1750 Risk-Based Capital, (Risk-Based Capital Regulation). The amendments are intended to enhance the accuracy and transparency of the calculation of the risk-based capital requirement for Fannie Mae and Freddie Mac (the Enterprises) and to update the Risk-Based Capital Regulation to incorporate approved new activities treatments.

EFFECTIVE DATE: December 14, 2006.

FOR FURTHER INFORMATION CONTACT: David A. Felt, Deputy General Counsel, telephone (202) 414–3750, or Jamie Schwing, Associate General Counsel, telephone (202) 414–3787 (not toll free numbers), Office of Federal Housing Enterprise Oversight, Fourth Floor, 1700 G Street, NW., Washington, DC 20552. The telephone number for the Telecommunications Device for the Deaf is (800) 877–8339.

SUPPLEMENTARY INFORMATION:

Background

Title XIII of the Housing and Community Development Act of 1992, Pub. L. 102–550, titled the Federal Housing Enterprise Financial Safety and Soundness Act of 1992 (12 U.S.C. 4501 *et seq.*), established OFHEO as an independent office within the Department of Housing and Urban Development to ensure that the Federal National Mortgage Association (Fannie Mae) and the Federal Home Loan Mortgage Corporation (Freddie Mac) (collectively, the Enterprises) are adequately capitalized, operate safely and soundly, and comply with applicable laws, rules and regulations.

In furtherance of its regulatory responsibilities, OFHEO published a final regulation setting forth a risk-based capital test which forms the basis for determining the risk-based capital requirement for each Enterprise.[1] The Risk-Based Capital Regulation has been amended to incorporate corrective and technical amendments that enhance the accuracy and transparency of the calculation of the risk-based capital requirement.[2]

Since the last amendment to the Risk Based Capital Regulation, additional experience with the regulation raised further operational and technical issues. On June 26, 2006, at 71 FR 36231, OFHEO published a proposed notice of rulemaking (NPRM) for comment to incorporate a number of technical amendments to the Risk-Based Capital Regulation. The NPRM proposed amending the Risk-Based Capital Regulation to incorporate additional interest rate indices, clarify definitions, integrate Enterprise new activities and update treatment of certain mark-to-market accounting issues. As stated in the NPRM, the proposed amendments are capital neutral and largely codify existing practice pursuant to the current Risk-Based Capital Regulation.

The 30-day comment period ended July 26, 2006. All comments received have been made available to the public in the OFHEO Public Reading Room and also posted on the OFHEO Web site at *http://OFHEO.gov.*

Comments Received

Comments were received from the Consumer Mortgage Coalition (CMC), a trade group of national residential mortgage lenders; FM Policy Focus, a coalition of financial services and housing-related trade associations; the Mortgage Insurance Companies of America (MICA); the Mortgage Bankers Association (MBA), a national association representing the real estate finance industry; Fannie Mae; and Freddie Mac. All comments were taken into consideration. Significant comments related to the proposed regulation are discussed below.

Purpose and Scope

All of the commenters expressed support for OFHEO's decision to revise the Risk-Based Capital Regulation to address ongoing financial and mortgage market developments that impact the risk profiles of the Enterprises. Commenters also supported OFHEO's decision to provide notice and opportunity to comment on the proposed changes, notwithstanding their technical nature and capital neutrality.

As noted in the comments, the Risk-Based Capital Regulation should be revised periodically to respond to developments in the mortgage markets, address technical issues, and respond to new Enterprise activities. The technical changes proposed by OFHEO are in furtherance of its regulatory duties and enhance both the accuracy and transparency of the Risk-Based Capital Regulation. For these reasons, and the discussions that follow, OFHEO has determined to issue the amendments as discussed below.

Additional Interest Rate Indices

Due to developments in the mortgage and financial markets since the promulgation of the Risk-Based Capital Regulation and the introduction of a number of approved new activities at each Enterprise, OFHEO proposed incorporating additions to the interest rate indices used to measure Enterprise risk. OFHEO proposed the incorporation of the new indices through revisions to Table ''3–18, Interest Rate and Index Inputs,'' and Table ''3–27, Non-Treasury Interest Rates,'' of Appendix A to Subpart B of the Risk-Based Capital Regulation. The new interest rate indices are the Constant Maturity Mortgage Index, 12 month Moving Treasury Average, One month Freddie Mac Reference Bill, Certificate of Deposits Index, 2 Year Swap, 3 Year Swap, 5 Year Swap, 10 Year Swap and 30 Year Swap. All of the commenters addressing this issue supported the adoption of the proposed interest rate indices used to measure more accurately

[1] Risk-Based Capital, 66 FR 47730 (September 13, 2001), 12 CFR part 1750.

[2] Risk-Based Capital, 66 FR 47730 (September 13, 2001), 12 CFR part 1750, *as amended,* 67 FR 11850 (March 15, 2002), 67 FR 19321 (April 19, 2002), 68 FR 7309 (February 13, 2003).

Enterprise risk. OFHEO has determined to adopt the amendments as proposed.

Revised Risk-Based Capital Regulation Definitions

As stated in the NPRM, additional operational experience with the Risk-Based Capital Regulation, as well as financial and mortgage market developments, motivated OFHEO to refine a number of defined terms in the regulation. Proposed amendments include changes to recognize that single family loans with interest-only periods have become common and that the Enterprises have guaranteed or acquired such loans. Sections 3.1.2.1, 3.6.3.3.1 and 3.6.3.3.3 of the appendix to the Risk-Based Capital Regulation currently provide a treatment for interest-only periods. However, sections 3.1.2.1, 3.6.3.3.1, and 3.6.3.3.2 currently assume that only multi-family loans have this feature. OFHEO's proposed amendments would adopt the changes necessary to accommodate single-family interest-only loans. In addition to the single-family interest-only issue, OFHEO proposed amendments to the definition of ''float-days'' in sections 3.1.2.1.1 and 3.6.3.7.2 to improve the accuracy of that definition. Finally, an additional number of definitions throughout the Risk-Based Capital Regulation were revised to ensure consistency and accuracy. All of the commenters that addressed this issue supported the adoption of the proposed amendments. OFHEO has determined to adopt the amendments as proposed.

Incorporation of New Enterprise Activities

Risk-Based Capital Regulation Section 3.11.3, Treatment of New Activities, sets forth the procedures by which new Enterprise activities are reported to OFHEO and analyzed by OFHEO to determine an appropriately conservative treatment to be incorporated into the risk-based capital calculation. The section also describes how any newly incorporated treatment is made available for public comment and possible further revision. The subheadings below describe the responses to comments received on new Enterprise activities.

a. Reverse Mortgages

OFHEO proposed revisions to Section 3.6.3.3.1 of the Risk-Based Capital Regulation to incorporate an appropriate treatment for reverse mortgages. Freddie Mac commented that the proposed treatment for reverse mortgages was operationally complex and that it did not accurately tie capital to risk. Freddie Mac also noted in its comments that it does not currently purchase or guarantee reverse mortgages. Freddie Mac suggested that it may propose an alternative treatment in the future if it ever purchases or guarantees reverse mortgages. Fannie Mae commented that the proposed treatment was ''insufficiently robust with regard to accuracy.'' Fannie Mae did not provide an alternative treatment. OFHEO considered both comments and determined that, in the absence of suggested alternative treatments or additional information that would support development of an alternative treatment, it would adopt the provision as proposed.

b. Futures and Options on Futures

OFHEO proposed technical amendments to Section 3.8 of the Risk-Based Capital Regulation to address treatments for futures and for options on futures. OFHEO's treatment specifies a multi-step process for modeling futures and options on futures. Freddie Mac agreed with the treatment for futures but suggested a better approach to modeling futures options would be to utilize the strike price in the calculation of the cash settlement amount. The comments did not provide an alternative treatment or additional supporting data. OFHEO considered Freddie Mac's comments; however, in the absence of additional data, and given OFHEO's favorable experience with the proposed method, OFHEO has determined to adopt the amendment as proposed.

c. Split-Rate Adjustable Rate Mortgages

OFHEO proposed a new activities treatment for split rate adjustable rate mortgages in Section 3.6 of the Risk-Based Capital Regulation. The proposed treatment ignores the split-rate feature and treats split-rate ARMs as traditional ARMs. Fannie Mae commented that the treatment was ''insufficiently robust.'' Fannie Mae did not propose an alternative treatment. OFHEO considered the comment, and, in the absence of an alternative treatment that improves upon the accuracy or transparency of the OFHEO proposal, determined to adopt the amendment as proposed.

d. CPI-Linked Floating Rate Instruments

OFHEO proposed incorporating a treatment for CPI-linked floating rate instruments in Section 3.8 of the Risk-Based Capital Regulation. Unlike interest rates, the stress test does not project the CPI. Enterprise issuance of CPI-linked instruments is tied to swap market transactions intended to create desired synthetic debt structure and terms. In such cases, the true economic position nets to the payment terms of the related derivative contract. OFHEO proposed a treatment where the net synthetic position is evaluated, whereby the Enterprises would substitute the CPI-linked instrument's coupon payment terms with those of the related swap contract. Fannie Mae commented that the treatment was incomplete and should not be incorporated into the regulation. Fannie Mae did not propose an alternative treatment. OFHEO's proposed treatment provides a transparent and accurate method to assess the impact of these instruments on the risk profiles of the Enterprises. OFHEO has determined to adopt the amendment as proposed.

Update of Mark-to-Market Accounting Treatment

Since the adoption of the Risk-Based Capital Regulation, the Financial Accounting Standards Board has adopted a number of new accounting standards that introduce fair values to the balance sheet and that are similar in complexity to FAS 115 and FAS 133. OFHEO proposed a technical amendment to Section 3.10.3.6.2 [a][1] of the Risk-Based Capital Regulation that would extend the current risk-based capital regulatory treatment of FAS 115 and FAS 133 to other accounting standards that require mark-to-market accounting. Freddie Mac offered several comments regarding the proposed amendments that clarify the scope of the proposed treatment for fair values. Freddie Mac's proposed language clarifies that applicable fair value standards will apply only to amounts that are measured at fair value, not to other amounts mentioned in such standards, and that amounts not measured at fair value are represented by and presented according to GAAP. OFHEO agrees that the language proposed by Freddie Mac will enhance the transparency and accuracy of the treatment and has amended the provision accordingly.

Fannie Mae's comment regarding Section 3.10.3.6.2.[a] 1. b. 1) requested permission to estimate amortized cost basis when implementing applicable fair value standards in order to obviate the maintenance of amortized cost basis information if GAAP no longer requires it. Fannie Mae did not provide an analysis of the impact, savings, applicability or scope of its suggested change. When and if GAAP changes as described by Fannie Mae arise, an alternative treatment could be adopted via an appropriate regulatory method. Thus, OFHEO has determined not to incorporate Fannie Mae's comment.

Other Comments

Commenters also addressed matters beyond the scope of the NPRM.

CMC suggested that OFHEO implement a new regulation mandating a scenario analysis of Enterprise capital to supplement the current analysis performed under the Risk-Based Capital Regulation. CMC suggested that OFHEO develop the alternative scenarios after a notice and comment procedure and a public hearing. This comment was beyond the scope of the NPRM and has not been considered in the current rulemaking.

FM Policy Watch raised concerns regarding the transparency and effectiveness of the new activities provisions of the Risk-Based Capital Regulation. FM Policy Watch recommended that OFHEO amend the new activities process to allow notice and comment on Enterprise new activities prior to their posting on the OFHEO Web site and incorporation into the risk-based capital calculation. Although this comment is beyond the scope of the current rulemaking, OFHEO notes that in addition to posting new activities treatments on the OFHEO Web site, new activities treatments are disclosed as part of the public information provided with the quarterly capital classification. To date, OFHEO has not received any comment on a new activities treatment posted on its Web site.

MICA commented that OFHEO should revise the treatment of loan-to-value ratios (LTVs) in the Risk Based Capital Regulation from the current approach to one that recognizes the combined LTV of all loans outstanding on a property. MICA also urged OFHEO to adopt a formal process to review the safety and soundness implications of Enterprise products, programs and activities. This comment was beyond the scope of the NPRM and has not been considered in the current rulemaking.

Regulatory Impacts

Executive Order 12866, Regulatory Planning and Review

The technical amendments address provisions of the Risk-Based Capital Regulation. The technical amendments incorporate new activities treatments of the Enterprises adopted in accordance with the Risk-Based Capital Regulation, corrections to certain definitions, updates to interest-rate indices and to incorporate recognition of accounting rule changes adopted since the Risk-Based Capital Regulation was promulgated. The technical amendments to the Risk-Based Capital Regulation are not classified as an economically significant rule under Executive Order 12866 because they do not result in an annual effect on the economy of $100 million or more or a major increase in costs or prices for consumers, individual industries, Federal, state or local government agencies, or geographic regions; or have significant adverse effects on competition, employment, investment, productivity, innovation, or on the ability of United States-based enterprises to compete with foreign-based enterprises in foreign or domestic markets. Accordingly, no regulatory impact assessment is required. Nevertheless, the technical amendments were submitted to the Office of Management and Budget (OMB) for review under the provisions of Executive Order 12866 as a significant regulatory action.

Executive Order 13132, Federalism

Executive Order 13132 requires that Executive departments and agencies identify regulatory actions that have significant federalism implications. A regulation has federalism implications if it has substantial direct effects on the states, on the relationship or distribution of power between the Federal Government and the states, or on the distribution of power and responsibilities among various levels of government. The Enterprises are federally chartered entities supervised by OFHEO. The technical amendments to the Risk-Based Capital Regulation address matters which the Enterprises must comply with for Federal regulatory purposes. The technical amendments to the Risk-Based Capital Regulation address matters regarding the risk-based capital calculation for the Enterprises and therefore do not affect in any manner the powers and authorities of any state with respect to the Enterprises or alter the distribution of power and responsibilities between Federal and state levels of government. Therefore, OFHEO has determined that the amendments to the Risk-Based Capital Regulation have no federalism implications that warrant preparation of a Federalism Assessment in accordance with Executive Order 13132.

Paperwork Reduction Act

The amendments do not contain any information collection requirements that require the approval of OMB under the Paperwork Reduction Act (44 U.S.C. 3501 *et seq.*).

Regulatory Flexibility Act

The Regulatory Flexibility Act (5 U.S.C. 601 *et seq.*) requires that a regulation that has a significant economic impact on a substantial number of small entities, small businesses, or small organizations must include an initial regulatory flexibility analysis describing the regulation's impact on small entities. Such an analysis need not be undertaken if the agency has certified that the regulation does not have a significant economic impact on a substantial number of small entities 5 U.S.C. 605(b). OFHEO has considered the impact of the technical amendments to the Risk-Based Capital Regulation under the Regulatory Flexibility Act. The General Counsel of OFHEO certifies that the technical amendments to the Risk-Based Capital Regulation are not likely to have a significant economic impact on a substantial number of small business entities because the regulation is applicable only to the Enterprises, which are not small entities for purposes of the Regulatory Flexibility Act.

List of Subjects in 12 CFR Part 1750

Capital classification, Mortgages, Risk-based capital.

■ Accordingly, for the reasons stated in the preamble, OFHEO amends 12 CFR part 1750 as follows:

PART 1750—CAPITAL

■ 1. The authority citation for part 1750 continues to read as follows:

Authority: 12 U.S.C. 4513, 4514, 4611, 4612, 4614, 4615, 4618.

■ 2. Amend Appendix A to subpart B of part 1750 as follows:

■ a. Revise Table 3–2 in paragraph 3.1.2.1 [c];

■ b. Revise Table 3–4 in paragraph 3.1.2.1 [c];

■ c. Revise Table 3–5 in paragraph 3.1.2.1.1;

■ d. Revise Table 3–8 in paragraph 3.1.2.1.1;

■ e. Revise Table 3–9 in paragraph 3.1.2.1.1;

■ f. Revise Table 3–12 in paragraph 3.1.2.2 [a];

■ g. Revise Table 3–13 in paragraph 3.1.2.2 [b];

■ h. Revise Table 3–14 in paragraph 3.1.2.2 [c];

■ i. Revise Table 3–15 in paragraph 3.1.2.3;

■ j. Revise Table 3–16 in paragraph 3.1.2.4;

■ k. Revise Table 3–18 in paragraph 3.1.3.1 [c];

■ l. Revise Table 3–27 in paragraph 3.3.3 [a] 3. b.;

■ m. Redesignate paragraphs 3.6.3.3.1 [d] and [e] as new paragraphs 3.6.3.3.1. [c] 5. and [c] 6., respectively;

■ n. Add new paragraphs 3.6.3.3.1 [c] 7. and [c] 8.;
■ o. Revise Table 3–32 in paragraph 3.6.3.3.2;
■ p. Revise Table 3–51 in paragraph 3.6.3.7.2;
■ q. Revise Table 3–54 in paragraph 3.6.3.8.2;
■ r. Revise Table 3–56 in paragraph 3.7.2.1.1;
■ s. Revise Table 3–57 in paragraph 3.7.2.1.2 [a];
■ t. Revise Table 3–58 in paragraph 3.7.2.1.3 [a];
■ u. Revise Table 3–66 in paragraph 3.8.2 [a];
■ v. Redesignate paragraph 3.8.3.6.2 [d] as new paragraph 3.8.3.6.2 [h];
■ w. Add new paragraphs 3.8.3.6.2 [d] thru [g];
■ x. Revise Table 3–70 in paragraph 3.9.2;
■ y. Revise paragraphs 3.10.3.6.2 [a] 1. a. and b.
■ z. Remove paragraphs 3.10.3.6.2 [a] 1. c. and d.

The revisions and additions read as follows:

Appendix A to Subpart B of Part 1750—Risk-Based Capital Test Methodology and Specifications

* * * * *

3.1.2.1 * * *

[c] * * *

TABLE 3–2—WHOLE LOAN CLASSIFICATION VARIABLES

Variable	Description	Range
Reporting Date	The last day of the quarter for the loan group activity that is being reported to OFHEO	YYYY0331 YYYY0630 YYYY0930 YYYY1231
Enterprise	Enterprise submitting the loan group data	Fannie Mae Freddie Mac
Business Type	Single family or multifamily	Single family Multifamily
Portfolio Type	Retained portfolio or Sold portfolio	Retained Portfolio Sold Portfolio
Government Flag	Conventional or Government insured loan	Conventional Government
Original LTV	Assigned LTV classes based on the ratio, in percent, between the original loan amount and the lesser of the purchase price or appraised value	LTV<=60 60<LTV<=70 70<LTV<=75 75<LTV<=80 80<LTV<=90 90<LTV<=95 95<LTV<=100 100<LTV
Interest-only Flag	Indicates if the loan is currently paying interest-only. Loans that started as I/Os and are currently amortizing should be flagged as 'N'	Yes No
Current Mortgage Interest Rate	Assigned classes for the current mortgage interest rate	0.0<=Rate<4.0 4.0<=Rate<5.0 5.0<=Rate<6.0 6.0<=Rate<7.0 7.0<=Rate<8.0 8.0<=Rate<9.0 9.0<=Rate<10.0 10.0<=Rate<11.0 11.0<=Rate<12.0 12.0<=Rate<13.0 13.0<=Rate<14.0 14.0<=Rate<15.0 15.0<=Rate<16.0 Rate=>16.0
Original Mortgage Interest Rate	Assigned classes for the original mortgage interest rate	0.0<=Rate<4.0 4.0<=Rate<5.0 5.0<=Rate<6.0 6.0<=Rate<7.0 7.0<=Rate<8.0 8.0<=Rate<9.0 9.0<=Rate<10.0 10.0<=Rate<11.0 11.0<=Rate<12.0 12.0<=Rate<13.0 13.0<=Rate<14.0 14.0<=Rate<15.0 15.0<=Rate<16.0 Rate=>16.0
Mortgage Age	Assigned classes for the age of the loan	0<=Age<=12 12<Age<=24 24<Age<=36 36<Age<=48 48<Age<=60 60<Age<=72

TABLE 3–2—WHOLE LOAN CLASSIFICATION VARIABLES—Continued

Variable	Description	Range
		72<Age<=84 84<Age<=96 96<Age<=108 108<Age<=120 120<Age<=132 132<Age<=144 144<Age<=156 156<Age<=168 168<Age<=180 Age>180
Rate Reset Period	Assigned classes for the number of months between rate adjustments	Period=1 1<Period<=4 4<Period<=9 9<Period<=15 15<Period<=60 60<Period<999 Period=999 (not applicable)
Payment Reset Period	Assigned classes for the number of months between payment adjustments after the duration of the teaser rate	Period<=9 9<Period<=15 15<Period<999 Period=999 (not applicable)
ARM Index	Specifies the type of index used to determine the interest rate at each adjustment	FHLB 11th District Cost of Funds. 1 Month Federal Agency Cost of Funds. 3 Month Federal Agency Cost of Funds. 6 Month Federal Agency Cost of Funds. 12 Month Federal Agency Cost of Funds. 24 Month Federal Agency Cost of Funds. 36 Month Federal Agency Cost of Funds. 60 Month Federal Agency Cost of Funds. 120 Month Federal Agency Cost of Funds. 360 Month Federal Agency Cost of Funds. Overnight Federal Funds (Effective). 1 Week Federal Funds 6 Month Federal Funds 1 month LIBOR 3 Month LIBOR 6 Month LIBOR 12 Month LIBOR Conventional Mortgage Rate 15 Year Fixed Mortgage Rate 7 Year Balloon Mortgage Rate Prime Rate 1 Month Treasury Bill 3 Month CMT 6 Month CMT 12 Month CMT 24 Month CMT 36 Month CMT 60 Month CMT 120 Month CMT 240 Month CMT 360 Month CMT
Cap Type Flag	Indicates if a loan group is rate-capped, payment-capped or uncapped	Payment Capped Rate Capped No periodic rate cap
OFHEO Ledger Code	OFHEO-specific General Ledger account number used in the Stress Test	Appropriate OFHEO Ledger Code based on the chart of accounts.

* * * * *

TABLE 3–4—ADDITIONAL MULTIFAMILY LOAN CLASSIFICATION VARIABLES

Variable	Description	Range
Multifamily Product Code	Identifies the mortgage product types for multifamily loans	Fixed Rate Fully Amortizing Adjustable Rate Fully Amortizing 5 Year Fixed Rate Balloon 7 Year Fixed Rate Balloon 10 Year Fixed Rate Balloon 15 Year Fixed Rate Balloon Balloon ARM Other

TABLE 3–4—ADDITIONAL MULTIFAMILY LOAN CLASSIFICATION VARIABLES—Continued

Variable	Description	Range
New Book Flag	''New Book'' is applied to Fannie Mae loans acquired beginning in 1988 and Freddie Mac loans acquired beginning in 1993, except for loans that were refinanced to avoid a default on a loan originated or acquired earlier	New Book Old Book
Ratio Update Flag	Indicates if the LTV and DCR were updated at origination or at Enterprise acquisition	Yes No
Current DCR	Assigned classes for the Debt Service Coverage Ratio based on the most recent annual operating statement	DCR<1.00 1.00<=DCR<1.10 1.10<=DCR<1.20 1.20<=DCR<1.30 1.30<=DCR<1.40 1.40<=DCR<1.50 1.50<=DCR<1.60 1.60<=DCR<1.70 1.70<=DCR<1.80 1.80<=DCR<1.90 1.90<=DCR<2.00 2.00<=DCR<2.50 2.50<=DCR<4.00 DCR>=4.00
Prepayment Penalty Flag	Indicates if prepayment of the loan is subject to active prepayment penalties or yield maintenance provisions	Yes No

* * * * *

TABLE 3—5—MORTGAGE AMORTIZATION CALCULATION INPUTS

Variable	Description
	Rate Type (Fixed or Adjustable)
	Product Type (30/20/15-Year FRM, ARM, Balloon, Government, etc.)
UPB_{ORIG}	Unpaid Principal Balance at Origination (aggregate for Loan Group)
UPB_0	Unpaid Principal Balance at start of Stress Test (aggregate for Loan Group), adjusted by UPB scale factor.
MIR_0	Mortgage Interest Rate for the Mortgage Payment prior to the start of the Stress Test, or Initial Mortgage Interest Rate for new loans (weighted average for Loan Group) (expressed as a decimal per annum)
PMT_0	Amount of the Mortgage Payment (Principal and Interest) prior to the start of the Stress Test, or first Payment for new loans (aggregate for Loan Group), adjusted by UPB scale factor.
AT	Original loan Amortizing Term in months (weighted average for Loan Group)
RM	Remaining term to Maturity in months (i.e., number of contractual payments due between the start of the Stress Test and the contractual maturity date of the loan) (weighted average for Loan Group)
A_0	Age of the loan at the start of Stress Test, in months (weighted average for Loan Group)
IRP	Initial Rate Period, in months
	Interest-only Flag
RIOP	Remaining Interest-only period, in months (weighted average for loan group)
UPB Scale Factor	Factor determined by reconciling reported UPB to published financials.\
Additional Interest Rate Inputs	
GFR	Guarantee Fee Rate (weighted average for Loan Group) (decimal per annum)
SFR	Servicing Fee Rate (weighted average for Loan Group) (decimal per annum)
Additional Inputs for ARMs (weighted averages for Loan Group, except for Index)	
$INDEX_m$	Monthly values of the contractual Interest Rate Index
LB	Look-Back period, in months
MARGIN	Loan Margin (over index), decimal per annum
RRP	Rate Reset Period, in months

TABLE 3—5—MORTGAGE AMORTIZATION CALCULATION INPUTS—Continued

Variable	Description
	Rate Reset Limit (up and down), decimal per annum
	Maximum Rate (life cap), decimal per annum
	Minimum Rate (life floor), decimal per annum
NAC	Negative Amortization Cap, decimal fraction of UPB_{ORIG}
	Unlimited Payment Reset Period, in months
PRP	Payment Reset Period, in months
	Payment Reset Limit, as decimal fraction of prior payment

* * * * *

TABLE 3–8—MISCELLANEOUS WHOLE LOAN CASH AND ACCOUNTING FLOW INPUTS

Variable	Description
GF	Guarantee Fee rate (weighted average for Loan Group) (decimal per annum)
FDS	Float Days for Scheduled Principal and Interest (weighted average for Loan Group)
FDP	Float Days for Prepaid Principal (weighted average for Loan Group)
FREP	Fraction Repurchased (weighted average for Loan Group) (decimal)
RM	Remaining Term to Maturity in months
UPD_0	Sum of all unamortized discounts, premiums, fees, commissions, etc. for the loan group, such that the unamortized balance equals the book value minus the face value for the loan group at the start of the Stress Test, adjusted by the Unamortized Balance Scale Factor
Unamortized Balance Scale Factor	Factor determined by reconciling reported Unamortized Balance to published financials

TABLE 3–9—ADDITIONAL INPUTS FOR REPURCHASED MBS

Variable	Description
Wtd Ave Percent Repurchased	For sold loan groups, the percent of the loan group UPB that gives the actual dollar amount of loans that collateralize single class MBSs that the Enterprise holds in its own portfolio
$SUPD_0$	The aggregate sum of all unamortized discounts, premiums, fees, commissions, etc. associated with the securities modeled using the Wtd Ave Percent Repurchased, such that the unamortized balance equals the book value minus the face value for the relevant securities at the start of the Stress Test, adjusted by the percent repurchased and the Security Unamortized Balance Scale Factor
Security Unamortized Balances Scale Factor	Factor determined by reconciling reported Security Unamortized Balances to published financials

* * * * *

3.1.2.2 * * *

[a] * * *

TABLE 3–12—INPUTS FOR SINGLE CLASS MBS CASH FLOWS

Variable	Description
Pool Number	A unique number identifying each mortgage pool
CUSIP Number	A unique number assigned to publicly traded securities by the Committee on Uniform Securities Identification Procedures
Issuer	Issuer of the mortgage pool
Government Flag	Indicates Government insured collateral
Original UPB Amount	Original pool balance adjusted by UPB scale factor and multiplied by the Enterprise's percentage ownership
Current UPB Amount	Initial Pool balance (at the start of the Stress Test), adjusted by UPB scale factor and multiplied by the Enterprise's percentage ownership
Product Code	Mortgage product type for the pool

TABLE 3–12—INPUTS FOR SINGLE CLASS MBS CASH FLOWS—Continued

Variable	Description
Security Rate Index	If the rate on the security adjusts over time, the index that the adjustment is based on
Unamortized Balance	The sum of all unamortized discounts, premiums, fees, commissions, etc., such that the unamortized balance equals book value minus face value, adjusted by Unamortized Balance Scale Factor
Wt Avg Original Amortization Term	Original amortization term of the underlying loans, in months (weighted average for underlying loans)
Wt Avg Remaining Term of Maturity	Remaining maturity of the underlying loans at the start of the Stress Test (weighted average for underlying loans)
Wt Avg Age	Age of the underlying loans at the start of the Stress Test (weighted average for underlying loans)
Wt Avg Current Mortgage Interest Rate	Mortgage Interest Rate of the underlying loans at the start of the Stress Test (weighted average for underlying loans)
Wt Avg Pass-Through Rate	Pass-Through Rate of the underlying loans at the start of the Stress Test (Sold loans only) (weighted average for underlying loans)
Wtg Avg Original Mortgage Interest Rate	The current UPB weighted average mortgage interest rate in effect at origination for the loans in the pool
Security Rating	The most current rating issued by any Nationally Recognized Statistical Rating Organization (NRSRO) for this security, as of the reporting date
Wt Avg Gross Margin	Gross margin for the underlying loans (ARM MBS only) (weighted average for underlying loans)
Wt Avg Net Margin	Net margin (used to determine the security rate for ARM MBS) (weighted average for underlying loans)
Wt Avg Rate Reset Period	Rate reset period in months (ARM MBS only) (weighted average for underlying loans)
Wt Avg Rate Reset Limit	Rate reset limit up/down (ARM MBS only) (weighted average for underlying loans)
Wt Avg Life Interest Rate Ceiling	Maximum rate (lifetime cap) (ARM MBS only) (weighted average for underlying loans)
Wt Avg Life Interest Rate Floor	Minimum rate (lifetime floor) (ARM MBS only) (weighted average for underlying loans)
Wt Avg Payment Reset Period	Payment reset period in months (ARM MBS only) (weighted average for underlying loans)
Wt Avg Payment Reset Limit	Payment reset limit up/down (ARM MBS only) (weighted average for underlying loans)
Wt Avg Lockback Period	The number of months to look back from the interest rate change date to find the index value that will be used to determine the next interest rate (weighted average for underlying loans)
Wt Avg Negative Amortization Cap	The maximum amount to which the balance can increase before the payment is recast to a fully amortizing amount. It is expressed as a fraction of the original UPB (weighted average for underlying loans)
Wt Avg Original Mortgage Interest Rate	The current UPB weighted average original mortgage interest rate for the loans in the pool
Wt Avg Initial Interest Rate Period	Number of months between the loan origination date and the first rate adjustment date (weighted average for underlying loans)
Wt Avg Unlimited Payment Reset Period	Number of months between unlimited payment resets i.e., not limited by payment caps, starting with origination date (weighted average for underlying loans)
Notional Flag	Indicates if the amounts reported in Original Security Balance and Current Security Balance are notional
UPB Scale Factor	Factor determined by reconciling reported UPB to published financials
Unamortized Balance Scale Factor	Factor determined by reconciling reported Unamortized Balance to published financials
Whole Loan Modeling Flag	Indicates that the Current UPB Amount and Unamortized Balance associated with this repurchased MBS are included in the Wtg Avg Percent Repurchased and Security Unamortized Balance fields
FAS 115 Classification	The financial instrument's classification according to FAS 115
$HPGR_K$	Vector of House Price Growth Rates for quarters q=1. . .40 of the Stress Period

[b] * * *

TABLE 3–13—INFORMATION FOR MULTI-CLASS AND DERIVATIVE MBS CASH FLOWS INPUTS

Variable	Description
CUSIP Number	A unique number assigned to publicly traded securities by the Committee on Uniform Securities Identification Procedures
Issuer	Issuer of the security: FNMA, FHLMC, GNMA or other

TABLE 3–13—INFORMATION FOR MULTI-CLASS AND DERIVATIVE MBS CASH FLOWS INPUTS—Continued

Variable	Description
Original Security Balance	Original principal balance of the security (notional amount for interest-only securities) at the time of issuance, adjusted by UPB scale factor, multiplied by the Enterprise's percentage ownership
Current Security Balance	Initial principal balance, or notional amount, at the start of the Stress Period, adjusted by UPB scale factor, multiplied by the Enterprise's percentage ownership
Current Security Percentage Owned	The percentage of a security's total current balance owned by the Enterprise
Notional Flag	Indicates if the amounts reported in Original Security Balance and Current Security Balance are notional
Unamortized Balance	The sum of all unamortized discounts, premiums, fees, commissions, etc., such that the unamortized balance equals book value minus face value, adjusted by the Unamortized Balance Scale Factor
Unamortized Balance Scale Factor	Factor determined by reconciling reported Unamortized Balance to published financials
UPB Scale Factor	Factor determined by reconciling the reported current security balance to published financials
Security Rating	The most current rating issued by any Nationally Recognized Statistical Rating Organization (NRSRO) for this security, as of the reporting date

[c] * * *

TABLE 3–14—INPUTS FOR MRBS AND DERIVATIVE MBS CASH FLOWS INPUTS

Variable	Description
CUSIP Number	A unique number assigned to publicly traded securities by the Committee on Uniform Securities Identification Procedures
Original Security Balance	Original principal balance, adjusted by UPB scale factor and multiplied by the Enterprise's percentage ownership
Current Security Balance	Initial Principal balance (at start of Stress Period), adjusted by UPB scale factor and multiplied by the Enterprise's percentage ownership
Unamortized Balance	The sum of all unamortized discounts, premiums, fees, commissions, etc., such that the unamortized balance equals book value minus face value, adjusted by Unamortized Balance scale factor
Unamortized Balance Scale Factor	Factor determined by reconciling reported Unamortized Balance to published financials
UPB Scale Factor	Factor determined by reconciling the reported current security balance to published financials
Floating Rate Flag	Indicates the instrument pays interest at a floating rate
Issue Date	The issue date of the security
Maturity Date	The stated maturity date of the security
Security Interest Rate	The rate at which the security earns interest, as of the reporting date
Principal Payment Window Starting Date, Down-Rate Scenario	The month in the Stress Test that principal payment is expected to start for the security under the statutory ''down'' interest rate scenario, according to Enterprise projections
Principal Payment Window Ending Date, Down-Rate Scenario	The month in the Stress Test that principal payment is expected to end for the security under the statutory ''down'' interest rate scenario, according to Enterprise projections
Principal Payment Window Starting Date, Up-Rate Scenario	The month in the Stress Test that principal payment is expected to start for the security under the statutory ''up'' interest rate scenario, according to Enterprise projections
Principal Payment Window Ending Date, Up-Rate Scenario	The month in the Stress Test that principal payment is expected to end for the security under the statutory ''up'' interest rate scenario, according to Enterprise projections
Notional Flag	Indicates if the amounts reported in Original Security Balance and Current Security Balance are notional
Security Rating	The most current rating issued by any Nationally Recognized Statistical Rating Organization (NRSRO) for this security, as of the reporting date
Security Rate Index	If the rate on the security adjusts over time, the index on which the adjustment is based
Security Rate Index Coefficient	If the rate on the security adjusts over time, the coefficient is the number used to multiply by the value of the index
Security Rate Index Spread	If the rate on the security adjusts over time, the spread is added to the value of the index multiplied by the coefficient to determine the new rate
Security Rate Adjustment Frequency	The number of months between rate adjustments

TABLE 3–14—INPUTS FOR MRBS AND DERIVATIVE MBS CASH FLOWS INPUTS—Continued

Variable	Description
Security Interest Rate Ceiling	The maximum rate (lifetime cap) on the security
Security Interest Rate Floor	The minimum rate (lifetime floor) on the security
Life Ceiling Interest Rate	The maximum interest rate allowed throughout the life of the security
Life Floor Interest Rate	The minimum interest rate allowed throughout the life of security

3.1.2.3 * * *

TABLE 3–15—INPUT VARIABLES FOR NONMORTGAGE INSTRUMENT CASH FLOWS

Data elements	Description
Amortization Methodology Code	Enterprise method of amortizing deferred balances (e.g., straight line)
Asset ID	CUSIP or Reference Pool Number identifying the asset underlying a derivative position
Asset Type Code	Code that identifies asset type used in the commercial information service (e.g. ABS, Fannie Mae pool, Freddie Mac pool)
Associated Instrument ID	Instrument ID of an instrument linked to another instrument
Coefficient	Indicates the extent to which the coupon is leveraged or de-leveraged
Compound Indicator	Indicates if interest is compounded
Compounding Frequency	Indicates how often interest is compounded
Counterparty Credit Rating	NRSRO's rating for the counterparty
Counterparty Credit Rating Type	An indicator identifying the counterparty's credit rating as short-term ('S') or long-term ('L')
Counterparty ID	Enterprise counterparty tracking ID
Country Code	Standard country codes in compliance with Federal Information Processing Standards Publication 10–4
Credit Agency Code	Identifies NRSRO (e.g., Moody's)
Current Asset Face Amount	Current face amount of the asset underlying a swap adjusted by UPB scale factor
Current Coupon	Current coupon or dividend rate of the instrument
Current Unamortized Discount	Current unamortized premium or unaccreted discount of the instrument adjusted by Unamortized Balance Scale Factor. If the proceeds from the issuance of debt or derivatives or the amount paid for an asset were greater than par, the value should be positive. If the proceeds or the amounts paid were less than par, the value should be negative
Current Unamortized Fees	Current unamortized fees associated with the instrument adjusted by Unamortized Balance Scale Factor. Generally fees associated with the issuance of debt or derivatives should be negative numbers. Fees associated with the purchase of an asset should generally be reported as positive numbers
Current Unamortized Hedge	Current unamortized hedging gains (positive) or losses (negative) associated with the instrument adjusted by the Unamortized Balance Scale Factor
Current Unamortized Other	Any other unamortized items originally associated with the instrument adjusted by Unamortized Balance Scale Factor. If the proceeds from the issuance of debt or derivatives or the amount paid for an asset were greater than par, the value should be positive. If the proceeds or the amounts paid were less than par, the value should be negative
CUSIP_ISIN	CUSIP or ISIN Number identifying the instrument
Day Count	Day count convention (e.g. 30/360)
End Date	The last index repricing date
EOP Principal Balance	End of Period face, principal or notional, amount of the instrument adjusted by UPB scale factor
Exact Representation	Indicates that an instrument is modeled according to its contractual terms
Exercise Convention	Indicates option exercise convention (e.g., American Option)
Exercise Price	Par = 1.0; Options
First Coupon Date	Date first coupon is received or paid
Index Cap	Indicates maximum index rate
Index Floor	Indicates minimum index rate
Index Reset Frequency	Indicates how often the interest rate index resets on floating-rate instruments
Index Code	Indicates the interest rate index to which floating-rate instruments are tied (e.g., LIBOR)

TABLE 3–15—INPUT VARIABLES FOR NONMORTGAGE INSTRUMENT CASH FLOWS—Continued

Data elements	Description
Index Term	Point on yield curve, expressed in months, upon which the index is based
Instrument Credit Rating	NRSRO credit rating for the instrument
Instrument Credit Rating Type	An indicator identifying the instruments credit rating as short-term ('S') or long-term ('L')
Instrument ID	An integer used internally by the Enterprise that uniquely identifies the instrument
Interest Currency Code	Indicates currency in which interest payments are paid or received
Interest Type Code	Indicates the method of interest rate payments (e.g., fixed, floating, step, discount)
Issue Date	Indicates the date that the instrument was issued
Life Cap Rate	The maximum interest rate for the instrument throughout its life
Life Floor Rate	The minimum interest rate for the instrument throughout its life
Look-Back Period	Period from the index reset date, expressed in months, that the index value is derived
Maturity Date	Date that the instrument contractually matures
Notional Indicator	Identifies whether the face amount is notional
Instrument Type Code	Indicates the type of instrument to be modeled (e.g., ABS, Cap, Swap)
Option Indicator	Indicates if instrument contains an option
Option Type	Indicates option type (e.g., Call option)
Original Asset Face Amount	Original face amount of the asset underlying a swap adjusted by UPB scale factor
Original Discount	Original premium or discount associated with the purchase or sale of the instrument adjusted by Unamortized Balance Scale Factor. If the proceeds from the issuance of debt or derivatives or the amount paid for an asset were greater than par, the value should be positive. If the proceeds or the amounts paid were less than par, the value should be negative
Original Face	Original face, principal or notional, amount of the instrument adjusted by UPB scale factor
Original Fees	Fees or commissions paid at the time of purchase or sale adjusted by the Unamortized Balance Scale Factor. Generally fees associated with the issuance of debt or derivatives should be negative numbers. Fees associated with the purchase of an asset should generally be reported as positive numbers
Original Hedge	Gains (positive) or losses (negative) from closing out a hedge associated with the instrument at settlement, adjusted by the Unamortized Balance Scale Factor
Original Other	Any other items originally associated with the instrument to be amortized or accreted adjusted by the Unamortized Balance Scale Factor. If the proceeds from the issuance of debt or derivatives or the amount paid for an asset were greater than par, the value should be positive. If the proceeds of the amounts paid were less than par, the value should be negative
Parent Entity ID	Enterprise internal tracking ID for parent entity
Payment Amount	Interest payment amount associated with the instrument (reserved for complex instruments where interest payments are not modeled) adjusted by UPB scale factor
Payment Frequency	Indicates how often interest payments are made or received
Performance Date	"As of" date on which the data is submitted
Periodic Adjustment	The maximum amount that the interest rate for the instrument can change per reset
Position Code	Indicates whether the Enterprise pays or receives interest on the instrument
Principal Currency Code	Indicates currency in which principal payments are paid or received
Principal Factor Amount	EOP Principal Balance expressed as a percentage of Original Face
Principal Payment Date	A valid date identifying the date that principal is paid
Settlement Date	A valid date identifying the date the settlement occurred
Spread	An amount added to an index to determine an instrument's interest rate
Start Date	The date, spot or forward, when some feature of a financial contract becomes effective (e.g., Call Date), or when interest payments or receipts begin to be calculated
Strike Rate	The price or rate at which an option begins to have a settlement value at expiration, or, for interest-rate caps and floors, the rate that triggers interest payments
Submitting Entity	Indicates which Enterprise is submitting information
Trade ID	Unique code identifying the trade of an instrument
Transaction Code	Indicates the transaction that an Enterprise is initiating with the instrument (e.g. buy, issue reopen)

TABLE 3–15—INPUT VARIABLES FOR NONMORTGAGE INSTRUMENT CASH FLOWS—Continued

Data elements	Description
Transaction Date	A valid date identifying the date the transaction occurred
UPB Scale Factor	Factor determined by reconciling reported UPB to published financials
Unamortized Balances Scale Factor	Factor determined by reconciling reported Unamortized Balances to published financials

3.1.2.4 * * *

TABLE 3–16—INPUTS FOR ALTERNATIVE MODELING TREATMENT ITEMS

Variable	Description
TYPE	Type of item (asset, liability or off-balance sheet item)
BOOK	Book Value of item (amount outstanding adjusted for deferred items)
FACE	Face Value or notional balance of item for off-balance sheet items
REMATUR	Remaining Contractual Maturity of item in whole months. Any fraction of a month equals one whole month
RATE	Interest Rate
INDEX	Index used to calculate Interest Rate
FAS115	Designation that the item is recorded at fair value, according to FAS 115
RATING	Instrument or counterparty rating
FHA	In the case of off-balance sheet guarantees, a designation indicating 100% of collateral is guaranteed by FHA
MARGIN	Margin over an Index

* * * * *

3.1.3.1 * * *

[c] * * *

TABLE 3–18—INTEREST RATE AND INDEX INPUTS

Interest rate Index	Description	Source
1 MO Treasury Bill	One-month Treasury bill yield, monthly simple average of daily rate, quoted as actual/360	Bloomberg Generic 1 Month. U.S. Treasury bill. Ticker: GB1M (index).
3 MO CMT	Three-month constant maturity Treasury yield, monthly simple average of daily rate, quoted as bond equivalent yield	Federal Reserve H.15 Release.
6 MO CMT	Six-month constant maturity Treasury yield, monthly simple average of daily rate, quoted as bond equivalent yield	Federal Reserve H.15 Release.
1 YR CMT	One-year constant maturity Treasury yield, monthly simple average of daily rate, quoted as bond equivalent yield	Federal Reserve H.15 Release.
2 YR CMT	Two-year constant maturity Treasury yield, monthly simple average of daily rate, quoted as bond equivalent yield	Federal Reserve H.15 Release.
3 YR CMT	Three-year constant maturity Treasury yield, monthly simple average of daily rate, quoted as bond equivalent yield	Federal Reserve H.15 Release.
5 YR CMT	Five-year constant maturity Treasury yield, monthly simple average of daily rate, quoted as bond equivalent yield	Federal Reserve H.15 Release.
10 YR CMT	Ten-year constant maturity Treasury yield, monthly simple average of daily rate, quoted as bond equivalent yield	Federal Reserve H.15 Release.
20 YR CMT	Twenty-year constant maturity Treasury yield, monthly simple average of daily rate, quoted as bond equivalent yield	Federal Reserve H.15 Release.
30 YR CMT	Thirty-year constant maturity Treasury yield, monthly simple average of daily rate, quoted as bond equivalent yield; after February 15, 2002, estimated according to the Department of Treasury methodology using long-term average rates and extrapolation factors as referenced in OFHEO guideline 402	Federal Reserve H.15 Release, Extrapolation Factors used for estimation, U.S. Dept. of Treasury.

TABLE 3–18—INTEREST RATE AND INDEX INPUTS—Continued

Interest rate Index	Description	Source
12-mo Moving Treasury Average (MTA)	12-month Federal Reserve cumulative average 1 year CMT, monthly simple average of daily rate	Bloomberg Ticker: 12MTA (Index).
Overnight Fed Funds (Effective)	Overnight effective Federal Funds rate, monthly simple average of daily rate	Federal Reserve H.15 Release.
Certificate of Deposits Index (CODI)	12-month average of monthly published yields on 3-month certificates of deposit, based on the Federal Reserve Board statistical release, H–15	Bloomberg Ticker: COF CODI (index).
1 Week Federal Funds	1 week Federal Funds rate, monthly simple average of daily rates	Bloomberg Term Fed Funds U.S. Domestic Ticker: GFED01W (index).
6 Month Fed Funds	6 month Federal Funds rate, monthly simple average of daily rates	Bloomberg Term Fed Funds U.S. Domestic Ticker: GFED06M (index).
Conventional Mortgage Rate	FHLMC (Freddie Mac) contract interest rates for 30 YR fixed-rate mortgage commitments, monthly average of weekly rates	Federal Reserve H.15 Release.
Constant Maturity Mortgage (CMM) Index	Bond equivalent yield on TBA mortgage-backed security which prices at the par price	TradeWeb.
1-mo Freddie Mac Reference Bill	1-month Freddie Mac Reference Bill, actual price and yield by auction date	Freddiemac.com website: *http://www.freddiemac.com/debt/data/cgi-bin/refbillaucres.cgi?order=AD.*
FHLB 11th District COF	11th District (San Francisco) weighted average cost of funds for savings and loans, monthly	Bloomberg Cost of Funds for the 11th District Ticker: COF11 (index).
1 MO LIBOR	One-month London Interbank Offered Rate, average of bid and asked, monthly simple average of daily rates, quoted as actual/360	British Bankers Association Bloomberg Ticker: US0001M (index).
3 MO LIBOR	Three-month London Interbank Offered Rate, average of bid and asked, monthly simple average of daily rates, quoted as actual/360	British Bankers Association Bloomberg Ticker: US0003M (index).
6 MO LIBOR	Six-month London Interbank Offered Rate, average of bid and asked, monthly simple average of daily rates, quoted as actual/360	British Bankers Association Bloomberg Ticker: US0006M (index).
12 MO LIBOR	One-year London Interbank Offered Rate, average of bid and asked, monthly simple average of daily rates, quoted as actual/360	British Bankers Association Bloomberg Ticker: US0012M (index).
Prime Rate	Prevailing rate as quoted, monthly average of daily rates	Federal Reserve H.15 Release.
1 MO Federal Agency COF	One-month Federal Agency Cost of Funds, monthly simple average of daily rates, quoted as actual/360	Bloomberg Generic 1 Month Agency Discount Note Yield Ticker: AGDN030Y (index).
3 MO Federal Agency COF	Three-month Federal Agency Cost of Funds, monthly simple average of daily rates, quoted as actual/360	Bloomberg Generic 3 Month Agency Discount Note Yield Ticker: AGDN090Y (index).
6 MO Federal Agency COF	Six-month Federal Agency Cost of Funds, monthly simple average of daily rates, quoted as actual/360	Bloomberg Generic 6 Month Agency Discount Note Yield Ticker: AGDN180Y (index).
1 YR Federal Agency COF	One-year Federal Agency Cost of Funds, monthly simple average of daily rates, quoted as actual/360	Bloomberg Generic 12 Month Agency Discount Note Yield. Ticker: AGDN360Y (index).
2 YR Federal Agency COF	Two-year Federal Agency Fair Market Yield, monthly simple average of daily rates	Bloomberg Generic 2 Year Agency Fair Market Yield. Ticker: CO842Y (index).
3 YR Federal Agency COF	Three-year Federal Agency Fair Market Yield, monthly simple average of daily rates	Bloomberg Generic 3 Year Agency Fair Market Yield. Ticker: CO843Y (index).
5 YR Federal Agency COF	Five-year Federal Agency Fair Market Yield, monthly simple average of daily rates	Bloomberg Generic 5 Year Agency Fair Market Yield. Ticker: CO845Y (index).
10 YR Federal Agency COF	Ten-year Federal Agency Fair Market Yield, monthly simple average of daily rates	Bloomberg Generic 10 Year Agency Fair Market Yield. Ticker: CO8410Y (index).
30 YR Federal Agency COF	Thirty-year Federal Agency Fair Market Yield, monthly simple average of daily rates	Bloomberg Generic 30 Year Agency Fair Market Yield. Ticker: CO8430Y (index).
15 YR fixed-rate mortgage	FHLMC (Freddie Mac) contract interest rates for 15 YR fixed-rate mortgage commitments, monthly average of FHLMC (Freddie Mac) contract interest rates for 15 YR	Bloomberg FHLMC 15 YR, 10 day commitment rate Ticker: FHCR1510 (index).
7-year balloon mortgage rate	Seven-year balloon mortgage, equal to the Conventional Mortgage Rate less 50 basis points	Computed.
2-yr Swap	2-yr U.S. Dollar Swap Rate, quoted as semi-annually fixed rate vs. 3-mo U.S. dollar	Bloomberg Ticker: USSWAP2 (index).

TABLE 3–18—INTEREST RATE AND INDEX INPUTS—Continued

Interest rate Index	Description	Source
3-yr Swap	3-yr U.S. Dollar Swap Rate, quoted as semi-annually fixed rate vs. 3-mo U.S. dollar LIBOR	Bloomberg Ticker: USSWAP3 (Index).
5-yr Swap	5-yr U.S. Dollar Swap Rate, quoted as semi-annually fixed rate vs. 3-mo U.S. dollar LIBOR	Bloomberg Ticker: USSWAP5 (Index).
10-yr Swap	10-yr U.S. Dollar Swap Rate, quoted as semi-annually fixed rate vs. 3-mo U.S. dollar LIBOR	Bloomberg Ticker: USSWAP10 (Index).
30-yr Swap	30-yr U.S. Dollar Swap Rate, quoted as semi-annually fixed rate vs. 3-mo U.S. dollar LIBOR	Bloomberg Ticker: USSWAP30 (Index).

3.3.3 * * *

[a] * * *

3. * * *

b. * * *

TABLE 3–27—NON-TREASURY INTEREST RATES

Mortgage Rates	Spread Based on
15-year Fixed-rate Mortgage Rate	10-year CMT
30-year Conventional Mortgage Rate	10-year CMT
7-year Balloon Mortgage Rate	(computed from Conventional Mortgage Rate)
Constant Maturity Mortgage Index	10-year CMT
Other Non-Treasury Interest Rates	
Overnight Fed Funds	1-month Treasury Yield
7-day Fed Funds	1-month Treasury Yield
1-month LIBOR	1-month Treasury Yield
1-month Federal Agency Cost of Funds	1-month Treasury Yield
1-mo Freddie Mac Reference Bill	1-month Treasury Yield
3-month LIBOR	3-month CMT
3-month Federal Agency Cost of Funds	3-month CMT
PRIME	3-month CMT
6-month LIBOR	6-month CMT
6-month Federal Agency Cost of Funds	6-month CMT
6-month Fed Funds	6-month CMT
FHLB 11th District Cost of Funds	1-year CMT
12-month LIBOR	1-year CMT
12-mo Moving Treasury Average	1-year CMT
Certificate of Deposits Index	1-year CMT
1-year Federal Agency Cost of Funds	1-year CMT
2-year Federal Agency Cost of Funds	2-year CMT
3-year Federal Agency Cost of Funds	3-year CMT
5-year Federal Agency Cost of Funds	5-year CMT
10-year Federal Agency Cost of Funds	10-year CMT
30-year Federal Agency Cost of Funds	30-year CMT
2-yr Swap	2-year CMT
3-yr Swap	3-year CMT
5-yr Swap	5-year CMT

TABLE 3–27—NON-TREASURY INTEREST RATES—Continued

Mortgage Rates	Spread Based on
10-yr Swap	10-year CMT
30-yr Swap	30-year CMT

* * * * *

3.6.3.3.1 * * *

[c] * * *

7. *Reverse Mortgages.* In a reverse mortgage, a borrower receives one or more payments from the lender and the lender is repaid with a lump sum when the borrower dies, sells the property or moves out of the home permanently. The stress test models reverse mortgages as a ladder of zero-coupon securities:

a. 11 proxy securities for each reverse mortgage program are created.

b. A 10% conditional payment rate is used to create the zero-coupon securities that will mature in every year of the stress test. The zero-coupon securities are a laddered series of floating-rate coupon-bearing accreting bonds with a first payment date at maturity.

c. The 11th zero-coupon security will mature three months after the stress test to reflect the 35% of UPB not paid down during the stress period.

d. An OFHEO credit rating equivalent to AAA for the FHA insured programs and AA for other reverse mortgage programs is assigned.

8. *Split-Rate ARM Loans.* In split-rate ARM loans, the principal portion of the payment is based on a fixed-rate amortization schedule while the interest portion is based on a floating rate index. These multifamily loans are available as fully amortizing product or with a balloon feature. The stress test model does not provide treatment for split-rate ARM loans. Split-rate loans shall be treated as ARMs when they are issued without a balloon payment feature or as Balloon ARMs when the loans contain a balloon payment feature.

3.6.3.3.2 * * *

TABLE 3–32—LOAN GROUP INPUTS FOR MORTGAGE AMORTIZATION CALCULATION

Variable*	Description	Source
	Rate Type (Fixed or Adjustable)	RBC Report
	Product Type (30/20/15-Year FRM, ARM, Balloon, Government, etc.)	RBC Report
UPB_{ORIG}	Unpaid Principal Balance at Origination (aggregate for Loan Group)	RBC Report
UPB_0	Unpaid Principal Balance at start of Stress Test (aggregate for Loan Group)	RBC Report
MIR_0	Mortgage Interest Rate for the Mortgage Payment prior to the start of the Stress Test, or Initial Mortgage Interest Rate for new loans (weighted average for Loan Group) (expressed as a decimal per annum)	RBC Report
PMT_0	Amount of the Mortgage Payment (Principal and Interest) prior to the start of the Stress Test, or first payment for new loans (aggregate for Loan Group)	RBC Report
AT	Original loan Amortizing Term in months (weighted average for Loan Group)	RBC Report
RM	Remaining term to Maturity in months (i.e., number of contractual payments due between the start of the Stress Test and the contractual maturity date of the loan) (weighted average for Loan Group)	RBC Report
A_0	Age immediately prior to the start of the Stress Test, in months (weighted average for Loan Group)	RBC Report
	Interest-only Flag	RBC Report
RIOP	Remaining Interest-only period, in months (weighted average for loan group)	RBC Report
	Additional Interest Rate Inputs	
GFR	Guarantee Fee Rate (weighted average for Loan Group) (decimal per annum)	RBC Report
SFR	Servicing Fee Rate (weighted average for Loan Group) (decimal per annum)	RBC Report
	Additional Inputs for ARMs (weighted averages for Loan Group, except for Index)	
$INDEX_m$	Monthly values of the contractual Interest Rate Index	section 3.3, Interest Rates
LB	Look-Back period, in months	RBC Report
MARGIN	Loan Margin (over index), decimal per annum	RBC Report
RRP	Rate Reset Period, in months	RBC Report
	Rate Reset Limit (up and down), decimal per annum	RBC Report
	Maximum Rate (life cap), decimal per annum	RBC Report
	Minimum Rate (life floor), decimal per annum	RBC Report
NAC	Negative Amortization Cap, decimal fraction of UPB_{ORIG}	RBC Report
	Unlimited Payment Reset Period, in months	RBC Report

TABLE 3–32—LOAN GROUP INPUTS FOR MORTGAGE AMORTIZATION CALCULATION—Continued

Variable*	Description	Source
PRP	Payment Reset Period, in months	RBC Report
	Payment Reset Limit, as decimal fraction of prior payment	RBC Report
IRP	Initial Rate Period, in months	RBC Report

*Variable name is given when used in an equation

* * * * *

3.6.3.7.2 * * *

TABLE 3–51—INPUTS FOR FINAL CALCULATION OF STRESS TEST WHOLE LOAN CASH FLOWS

Variable	Description	Source
UPB_m	Aggregate Unpaid Principal Balance in month m = 0 ... RM	section 3.6.3.3.4, Mortgage Amortization Schedule Outputs
NYR_m	Net Yield Rate in month m = 1 ... RM	section 3.6.3.3.4, Mortgage Amortization Schedule Outputs
GF	Guarantee Fee rate (weighted average for Loan Group) (decimal per annum)	RBC Report
PTR_m	Pass-Through Rate in month m = 1 ... RM	section 3.6.3.3.4, Mortgage Amortization Schedule Outputs
SP_m	Aggregate Scheduled Principal (Amortization) in month m = 1 ... RM	section 3.6.3.3.4, Mortgage Amortization Schedule Outputs
PRE_m^{SF} PRE_m^{MF}	Prepaying Fraction of original Loan Group in month m = 1 ... RM	section 3.6.3.4.4, Single Family Default and Prepayment Outputs and, section 3.6.3.5.4, Multifamily Default and Prepayment Outputs
DEF_m^{SF} DEF_m^{MF}	Defaulting Fraction of original Loan Group in month m = 1 ... RM	section 3.6.3.4.4, Single Family Default and Prepayment Outputs and, section 3.6.3.5.4, Multifamily Default and Prepayment Outputs
$PERF_m^{SF}$ $PERF_m^{MF}$	Performing Fraction of original Loan Group in month m = 1 ... RM	section 3.6.3.4.4, Single Family Default and Prepayment Outputs and, section 3.6.3.5.4, Multifamily Default and Prepayment Outputs
FDS	Float Days for Scheduled Principal and Interest (weighted average for Loan Group)	RBC Report
FDP	Float Days for Prepaid Principal (weighted average for Loan Group)	RBC Report
FER_m	Float Earnings Rate in month m = 1 ... RM	1 week Fed Funds Rate; section 3.3, Interest Rates
LS_m^{SF}	Loss Severity Rate in month m = 1 ... RM	section 3.6.3.6.5.2, Single Family and Multifamily Net Loss Severity Outputs
FREP	Fraction Repurchased (weighted average for Loan Group) (decimal)	RBC Report

* * * * *

3.6.3.8.2 * * *

TABLE 3–54—INPUTS FOR WHOLE LOAN ACCOUNTING FLOWS

Variable	Description	Source
RM	Remaining Term to Maturity in months	RBC Report
UPD_0	Sum of all unamortized discounts, premiums, fees, commissions, etc. for the loan group, such that the unamortized balance equals the book value minus the face value for the loan group at the start of the Stress Test, adjusted by the Unamortized Balance Scale Factor	RBC Report
NYR_0	Net Yield Rate at time zero	section 3.6.3.3.4, Mortgage Amortization Schedule Outputs
$PUPB_m$	Performing Loan Group UPB in months m = 0 ... RM	section 3.6.3.7.4, Stress Test Whole Loan Cash Flow Outputs

TABLE 3–54—INPUTS FOR WHOLE LOAN ACCOUNTING FLOWS—Continued

Variable	Description	Source
PTR_0	Pass-Through Rate at time zero	section 3.6.3.3.4, Mortgage Amortization Schedule Outputs
$SPUPB_m$	Security Performing UPB in months m = 0 ... RM	section 3.6.3.7.4, Stress Test Whole Loan Cash Flow Outputs
$SUPD_0$	The sum of all unamortized discounts, premiums, fees, commissions, etc. associated with the securities modeled using the Wtd Ave Percent Repurchased, such that the unamortized balance equals the book value minus the face value for the relevant securities at the start of the Stress Test, adjusted by the percent repurchased and the Security Unamortized Balance Scale Factor	RBC Report

* * * * *

3.7.2.1.1 * * *

TABLE 3–56—RBC REPORT INPUTS FOR SINGLE CLASS MBS CASH FLOWS

Variable	Description
Pool Number	A unique number identifying each mortgage pool
CUSIP Number	A unique number assigned to publicly traded securities by the Committee on Uniform Securities Identification Procedures
Issuer	Issuer of the mortgage pool
Original UPB Amount	Original pool balance multiplied by the Enterprise's percentage ownership
Current UPB Amount	Initial Pool balance (at the start of the Stress Test), multiplied by the Enterprise's percentage ownership
Product Code	Mortgage product type for the pool
Security Rate Index	If the rate on the security adjusts over time, the index that the adjustment is based on
Unamortized Balance	The sum of all unamortized discounts, premiums, fees, commissions, etc., such that the unamortized balance equals book value minus face value, adjusted by the Unamortized Balance Scale Factor
Wt Avg Original Amortization Term	Original amortization term of the underlying loans, in months (weighted average for underlying loans)
Wt Avg Remaining Term of Maturity	Remaining Maturity of the underlying loans at the start of the Stress Test (weighted average for underlying loans)
Wt Avg Age	Age of the underlying loans at the start of the Stress Test (weighted average for underlying loans)
Wt Avg Current Mortgage Interest rate	Mortgage Interest Rate of the underlying loans at the start of the Stress Test (weighted average for underlying loans)
Wt Avg Pass-Through Rate	Pass-Through Rate of the underlying loans at the start of the Stress Test (weighted average for underlying loans)
Wtg Avg Original Mortgage Interest Rate	The current UPB weighted average Mortgage Interest Rate in effect at Origination for the loans in the pool
Security Rating	The most current rating issued by any Nationally Recognized Statistical Rating Organization (NRSRO) for this security, as of the reporting date. In the case of a ''split'' rating, the lowest rating should be given
Wt Avg Gross Margin	Gross margin for the underlying loans (ARM MBS only) (weighted average for underlying loans)
Wt Avg Net Margin	Net margin (used to determine the security rate for ARM MBS) (weighted average for underlying loans)
Wt Avg Rate Reset Period	Rate reset period in months (ARM MBS only) (weighted average for underlying loans)
Wt Avg Rate Reset Limit	Rate reset limit up/down (ARM MBS only) (weighted average for underlying loans)
Wt Avg Life Interest Rate Ceiling	Maximum rate (lifetime cap) (ARM MBS only) (weighted average for underlying loans)
Wt Avg Life Interest Rate Floor	Minimum rate (lifetime floor) (ARM MBS only) (weighted average for underlying loans)
Wt Avg Payment Reset Period	Payment reset period in months (ARM MBS only) (weighted average for underlying loans)
Wt Avg Payment Reset Limit	Payment reset limit up/down (ARM MBS only) (weighted average for underlying loans)
Wt Avg Lookback Period	The number of months to look back from the interest rate change date to find the index value that will be used to determine the next interest rate (ARM MBS only) (weighted average for underlying loans)
Wt Avg Negative Amortization Cap	The maximum amount to which the balance can increase before the payment is recast to a fully amortizing amount. It is expressed as a fraction of the original UPB. (ARM MBS only) (weighted average for underlying loans)

TABLE 3–56—RBC REPORT INPUTS FOR SINGLE CLASS MBS CASH FLOWS—Continued

Variable	Description
Wt Avg Initial Interest Rate Period	Number of months between the loan origination date and the first rate adjustment date (ARM MBS only) (weighted average for underlying loans)
Wt Avg Unlimited Payment Reset Period	Number of months between unlimited payment resets, *i.e.*, not limited by payment caps, starting with Origination date (ARM MBS only) (weighted average for underlying loans)
Notional Flag	Indicates that amounts reported in Original UPB Amount and Current UPB Amount are notional
UPB Scale Factor	Factor applied to the current UPB that offsets any timing adjustments between the security level data and the Enterprise's published financials
Whole Loan Modeling Flag	Indicates that the Current UPB Amount and Unamortized Balance associated with this Repurchased MBS are included in the Wtg Avg Percent Repurchased and Security Unamortized Balance fields
FAS 115 Classification	The financial instrument's classification according to FAS 115
$HPGR_K$	Vector of House Price Growth Rates for quarters q=1...40 of the Stress Period

3.7.2.1.2 * * *

[a] * * *

TABLE 3–57—RBC REPORT INPUTS FOR MULTI-CLASS AND DERIVATIVE MBS CASH FLOWS

Variable	Description
CUSIP Number	A unique number assigned to publicly traded securities by the Committee on Uniform Securities Identification Procedures
Issuer	Issuer of the security: FNMA, FHLMC, GNMA or other
Original Security Balance	Original principal balance of the security (notional amount for Interest-Only securities) at the time of issuance, multiplied by the Enterprise's percentage ownership
Current Security Balance	Initial principal balance, or notional amount, at the start of the Stress Period multiplied by the Enterprise's percentage ownership
Current Security Percentage Owned	The percentage of a security's total current balance owned by the Enterprise
Unamortized Balance	The sum of all unamortized discounts, premiums, fees, commissions, etc., such that the unamortized balance equals book value minus face value, adjusted by the Unamortized Balance Scale Factor.

* * * * *

3.7.2.1.3 * * *

[a] * * *

TABLE 3–58—RBC REPORT INPUTS FOR MRBS AND DERIVATIVE MBS CASH FLOWS

Variable	Description
CUSIP Number	A unique number assigned to publicly traded securities by the Committee on Uniform Securities Identification Procedures
Original Security Balance	Original principal balance, multiplied by the Enterprise's percentage ownership
Current Security Balance	Initial principal balance (at start of Stress Period), multiplied by the Enterprise's percentage ownership
Unamortized Balance	The sum of all unamortized discounts, premiums, fees, commissions, etc., such that the unamortized balance equals book value minus face value, adjusted by the Unamortized Balance Scale Factor
Issue Date	The Issue Date of the security
Maturity Date	The stated Maturity Date of the security
Security Interest Rate	The rate at which the security earns interest, as of the reporting date
Principal Payment Window Starting Date, Down-Rate Scenario	The month in the Stress Test that principal payment is expected to start for the security under the statutory ''down'' interest rate scenario, according to Enterprise projections
Principal Payment Window Ending Date, Down-Rate Scenario	The month in the Stress Test that principal payment is expected to end for the security under the statutory ''down'' interest rate scenario, according to Enterprise projections
Principal Payment Window Starting Date, Up-Rate Scenario	The month in the Stress Test that principal payment is expected to start for the security under the statutory ''up'' interest rate scenario, according to Enterprise projections

TABLE 3–58—RBC REPORT INPUTS FOR MRBS AND DERIVATIVE MBS CASH FLOWS—Continued

Variable	Description
Principal Payment Window Ending Date, Up-Rate Scenario	The month in the Stress Test that principal payment is expected to end for the security under the statutory ''up'' interest rate scenario, according to Enterprise projections
Security Rating	The most current rating issued by any Nationally Recognized Statistical Rating Organization (NRSRO) for this security, as of the reporting date. In the case of a ''split'' rating, the lowest rating should be given.
Security Rate Index	If the rate on the security adjusts over time, the index on which the adjustment is based
Security Rate Index Coefficient	If the rate on the security adjusts over time, the coefficient is the number used to multiply by the value of the index
Security Rate Index Spread	If the rate on the security adjusts over time, the spread is added to the value of the index multiplied by the coefficient to determine the new rate
Security Rate Adjustment Frequency	The number of months between rate adjustments
Security Interest Rate Ceiling	The maximum rate (lifetime cap) on the security
Security Interest Rate Floor	The minimum rate (lifetime floor) on the security

* * * * *

3.8.2 * * *

[a] * * *

TABLE 3–66—INPUT VARIABLES FOR NONMORTGAGE INSTRUMENT CASH FLOWS

Data elements	Description
Amortization Methodology Code	Enterprise method of amortizing deferred balances (e.g., straight line)
Asset ID	CUSIP or Reference Pool Number identifying the asset underlying a derivative position
Asset Type Code	Code that identifies asset type used in the commercial information service (e.g., ABS, Fannie Mae pool, Freddie Mac pool)
Associated Instrument ID	Instrument ID of an instrument linked to another instrument
Coefficient	Indicates the extent to which the coupon is leveraged or de-leveraged
Compound Indicator	Indicates if interest is compounded
Compounding Frequency	Indicates how often interest is compounded
Counterparty Credit Rating	NRSRO's rating for the counterparty
Counterparty Credit Rating Type	An indicator identifying the counterparty's credit rating as short-term ('S') or long-term ('L')
Counterparty ID	Enterprise counterparty tracking ID
Country Code	Standard country codes in compliance with Federal Information Processing Standards Publication 10–4
Credit Agency Code	Identifies NRSRO (e.g., Moody's)
Current Asset Face Amount	Current face amount of the asset underlying a swap
Current Coupon	Current coupon or dividend rate of the instrument
Current Unamortized Discount	Current unamortized premium or unaccreted discount of the instrument adjusted by the Unamortized Balance Scale Factor. If the proceeds from the issuance of debt or derivatives or the amount paid for an asset were greater than par, the value should be positive. If the proceeds or the amounts paid were less than par, the value should be negative
Current Unamortized Fees	Current unamortized fees associated with the instrument adjusted by the Unamortized Balance Scale Factor. Generally fees associated with the issuance of debt or derivatives should be negative numbers. Fees associated with the purchase of an asset should generally be reported as positive numbers
Current Unamortized Hedge	Current unamortized hedging gains (positive) or losses (negative) associated with the instrument adjusted by the Unamortized Balance Scale Factor
Current Unamortized Other	Any other unamortized items originally associated with the instrument adjusted by the Unamortized Balance Scale Factor. If the proceeds from the issuance of debt or derivatives or the amount paid for an asset was greater than par, the value should be positive. If the proceeds or the amounts paid were less than par, the value should be negative
CUSIP_ISIN	CUSIP or ISIN Number identifying the instrument
Day Count	Day count convention (e.g., 30/360)

TABLE 3–66—INPUT VARIABLES FOR NONMORTGAGE INSTRUMENT CASH FLOWS—Continued

Data elements	Description
End Date	The last index repricing date
EOP Principal Balance	End of Period face, principal or notional, amount of the instrument
Exact Representation	Indicates that an instrument is modeled according to its contractual terms
Exercise Convention	Indicates option exercise convention (e.g., American Option)
Exercise Price	Par = 1.0; Options
First Coupon Date	Date first coupon is received or paid
Index Cap	Indicates maximum index rate
Index Floor	Indicates minimum index rate
Index Reset Frequency	Indicates how often the interest rate index resets on floating-rate instruments
Index Code	Indicates the interest rate index to which floating-rate instruments are tied (e.g., LIBOR)
Index Term	Point on yield curve, expressed in months, upon which the index is based
Instrument Credit Rating	NRSRO credit rating for the instrument
Instrument Credit Rating Type	An indicator identifying the instruments credit rating as short-term ('S') or long-term ('L')
Instrument ID	An integer used internally by the Enterprise that uniquely identifies the instrument
Interest Currency Code	Indicates currency in which interest payments are paid or received
Interest Type Code	Indicates the method of interest rate payments (e.g., fixed, floating, step, discount)
Issue Date	Indicates the date that the instrument was issued
Life Cap Rate	The maximum interest rate for the instrument throughout its life
Life Floor Rate	The minimum interest rate for the instrument throughout its life
Look-Back Period	Period from the index reset date, expressed in months, that the index value is derived
Maturity Date	Date that the instrument contractually matures
Notional Indicator	Identifies whether the face amount is notional
Instrument Type Code	Indicates the type of instrument to be modeled (e.g., ABS, Cap, Swap)
Option Indicator	Indicates if instrument contains an option
Option Type	Indicates option type (e.g., Call option)
Original Asset Face Amount	Original face amount of the asset underlying a swap
Original Discount	Original premium or discount associated with the purchase or sale of the instrument adjusted by the Unamortized Balance Scale Factor. If the proceeds from the issuance of debt or derivatives or the amount paid for an asset were greater than par, the value should be positive. If the proceeds or the amounts paid were less than par, the value should be negative
Original Face	Original face, principal or notional, amount of the instrument
Original Fees	Fees or commissions paid at the time of purchase or sale adjusted by the Unamortized Balance Scale Factor. Generally fees associated with the issuance of debt or derivatives should be negative numbers. Fees associated with the purchase of an asset should generally be reported as positive numbers
Original Hedge	Gains (positive) or losses (negative) from closing out a hedge associated with the instrument at settlement, adjusted by the Unamortized Balance Scale Factor
Original Other	Any other amounts originally associated with the instrument to be amortized or accreted adjusted by the Unamortized Balance Scale Factor. If the proceeds from the issuance of debt or derivatives or the amount paid for an asset were greater than par, the value should be positive. If the proceeds or the amounts paid were less than par, the value should be negative
Parent Entity ID	Enterprise internal tracking ID for parent entity
Payment Amount	Interest payment amount associated with the instrument (reserved for complex instruments where interest payments are not modeled)
Payment Frequency	Indicates how often interest payments are made or received
Performance Date	"As of" date on which the data is submitted
Periodic Adjustment	The maximum amount that the interest rate for the instrument can change per reset
Position Code	Indicates whether the Enterprise pays or receives interest on the instrument

TABLE 3–66—INPUT VARIABLES FOR NONMORTGAGE INSTRUMENT CASH FLOWS—Continued

Data elements	Description
Principal Currency Code	Indicates currency in which principal payments are paid or received
Principal Factor Amount	EOP Principal Balance expressed as a percentage of Original Face
Principal Payment Date	A valid date identifying the date that principal is paid
Settlement Date	A valid date identifying the date the settlement occurred
Spread	An amount added to an index to determine an instrument's interest rate
Start Date	The date, spot or forward, when some feature of a financial contract becomes effective (e.g., Call Date), or when interest payments or receipts begin to be calculated
Strike Rate	The price or rate at which an option begins to have a settlement value at expiration, or, for interest-rate caps and floors, the rate that triggers interest payments
Submitting Entity	Indicates which Enterprise is submitting information
Trade ID	Unique code identifying the trade of an instrument
Transaction Code	Indicates the transaction that an Enterprise is initiating with the instrument (e.g., buy, issue reopen)
Transaction Date	A valid date identifying the date the transaction occurred
UPB Scale Factor	Factor applied to UPB to adjust for timing differences
Unamortized Balances Scale Factor	Factor applied to Unamortized Balances to adjust for timing differences

* * * * *

3.8.3.6.2 * * *

[a] * * *

[b] * * *

[c] * * *

[d] Futures and Options on Futures also require special treatment:

1. Settle positions on their expiration dates. Exercise only in-the-money options (settlement value greater than zero).
2. Settle all contracts for cash
3. Calculate the cash settlement amount—the change in price of a contract from the contract trade date to its expiration date. Calculate the price on the expiration date based on stress test interest rates (or, as necessary, forward rates extrapolated from these rates).
4. Amortize amounts received or paid at the expiration date into income or expense on a straight-line basis over the life of the underlying instrument (in the case of an option on a futures contract, the life of the instrument underlying the futures contract).
5. Amortize an option premium on a straight-line basis over the life of the option. (Amortize any remaining balances upon option exercise.)

[e] Swaptions also require special treatment:

1. Assume swap settlement (i.e., initiation of the underlying swap) when a swap option is exercised.
2. Calculate a ''normalized'' fixed-pay coupon by subtracting the spread over the index, if any, from the coupon on the fixed-rate swap leg.
3. For all exercise types (American, Bermudan, and European), consistent with RBC Rule section 3.8.3.7, assume exercise by the party holding the swap option if the equivalent maturity Enterprise Cost of Funds is more than
   a. 50 basis points above the normalized fixed-pay coupon, for a pay-fixed swaption (a call or 'payor' swaption), or
   b. 50 basis points below the normalized fixed pay coupon for a receive-fixed swaption (a put or 'receiver' swaption).
4. Amortize option premiums on a straight-line basis over the option term. (Amortize any remaining balances upon option exercise).

[f] CPI-Linked Instruments also require special treatment. The stress test lacks the ability to accommodate floating-rate instruments that reset in response to changes in the consumer price index (CPI) as published by the Bureau of Labor Statistics. Enterprise issuance of CPI-linked instruments is tied to swap market transactions intended to create desired synthetic debt structure and terms. In such cases, the true economic position nets to the payment terms of the related derivative contract. Accordingly, in order to accommodate and address the existence of CPI-linked instruments in the Enterprises' portfolios, the net synthetic position shall be evaluated in the stress test. That is, for CPI-linked instruments tied to swap transactions that are formally linked in a hedge accounting relationship, the Enterprise should substitute the CPI-linked instrument's coupon payment terms with those of the related swap contract.

[g] Pre-refunded municipal bonds also require special treatments. Pre-refunded municipal bonds are collateralized by securities that are structured to fund all the cash flows of the refunded municipal bonds until the bonds are callable. Since the call date for the bonds, also referred to as the pre-refunded date, is a more accurate representation of the payoff date than the contractual maturity date of the bonds, the stress test models the bonds to mature on the call date.

* * * * *

3.9.2 * * *

TABLE 3–70—ALTERNATIVE MODELING TREATMENT INPUTS

Variable	Description
TYPE	Type of item (asset, liability or off-balance sheet item)
BOOK	Book Value of item (amount outstanding adjusted for deferred items)
FACE	Face Value or notional balance of item for off-balance sheet items
REMATUR	Remaining Contractual Maturity of item in whole months. Any fraction of a month equals one whole month.
RATE	Interest Rate
INDEX	Index used to calculate Interest Rate

TABLE 3–70—ALTERNATIVE MODELING TREATMENT INPUTS—Continued

Variable	Description
FAS115	Designation that the item is recorded at fair value, according to FAS 115
RATING	Instrument or counterparty rating
FHA	In the case of off-balance sheet guarantees, a designation indicating 100% of collateral is guaranteed by FHA
MARGIN	Margin over an Index

* * * * *

3.10.3.6.2 * * *

[a] * * *

1. Fair Values

a. The valuation impact of any Applicable Fair Value Standards (AFVS), cumulative from their time of implementation, will be reversed out of the starting position data, by debiting any accumulated credits, and crediting any accumulated debits.

(1) AFVS are defined as GAAP pronouncements that require or allow fair value measurements, e.g., EITF 99–20, FAS 65, FAS 87, FAS 115, FAS 133, FAS 140, FAS 149 and FIN 45. Valuation impacts of AVFS pertain only to amounts that are measured at fair value and not to other amounts that are included in AFVS but are not measured at fair value.

(2) The GAAP pronouncements covered by this treatment are subject to OFHEO review. The Enterprises will submit a list of standards and pronouncements that are being reversed in their RBC Reports.

b. After reversing the valuation impact of AFVS, any affected items are presented as follows:

(1) If absent the adoption of the AFVS, the affected transactions measured at fair value would have been accounted for on an amortized cost basis, they are presented as if they had always been accounted for on an amortized cost basis. Amounts not measured at fair value are represented as specified by GAAP and are presented using current GAAP rules.

(2) To the extent that transactions would not have been accounted for on an amortized cost basis, they are accounted for as if they were income and expense items.

* * * * *

Dated: November 21, 2006.

James B. Lockhart III,

Director, Office of Federal Housing Enterprise Oversight.

[FR Doc. 06–9446 Filed 12–13–06; 8:45 am]

BILLING CODE 4220–01–P

DEPARTMENT OF TRANSPORTATION

Federal Aviation Administration

14 CFR Part 39

[FAA–2006–26437; Directorate Identifier 2006–CE–73–AD; Amendment 39–14855; AD 2006–25–14]

RIN 2120–AA64

Airworthiness Directives; Schempp-Hirth Flugzeugbau GmbH Model Duo Discus T Gliders

AGENCY: Federal Aviation Administration (FAA), DOT.

ACTION: Final rule; request for comments.

SUMMARY: We are adopting a new airworthiness directive (AD) for the products listed above. This AD results from mandatory continuing airworthiness information (MCAI) issued by the aviation authority of another country to identify and correct an unsafe condition on an aviation product. The MCAI describes the unsafe condition as the possible failure of the attachment of the propeller blades. This AD requires actions that are intended to address the unsafe condition described in the MCAI.

DATES: This AD becomes effective January 3, 2007.

We must receive comments on this AD by January 16, 2007.

ADDRESSES: You may send comments by any of the following methods:

- DOT Docket Web site: Go to *http://dms.dot.gov* and follow the instructions for sending your comments electronically.
- Fax: (202) 493–2251.
- Mail: Docket Management Facility, U.S. Department of Transportation, 400 Seventh Street, SW., Nassif Building, Room PL–401, Washington, DC 20590–0001.
- Hand Delivery: Room PL–401 on the plaza level of the Nassif Building, 400 Seventh Street, SW., Washington, DC, between 9 a.m. and 5 p.m., Monday through Friday, except Federal holidays.
- Federal eRulemaking Portal: *http://www.regulations.gov*. Follow the instructions for submitting comments.

Examining the AD Docket

You may examine the AD docket on the Internet at *http://dms.dot.gov*; or in person at the Docket Management Facility between 9 a.m. and 5 p.m., Monday through Friday, except Federal holidays. The AD docket contains this AD, the regulatory evaluation, any comments received, and other information. The street address for the Docket Office (telephone (800) 647–5227) is in the **ADDRESSES** section. Comments will be available in the AD docket shortly after receipt.

FOR FURTHER INFORMATION CONTACT: Greg Davison, Glider Program Manager, 901 Locust, Room 301, Kansas City, Missouri 64106; telephone: (816) 329–4130; fax: (816) 329–4090.

SUPPLEMENTARY INFORMATION:

Streamlined Issuance of AD

The FAA is implementing a new process for streamlining the issuance of ADs related to MCAI. The streamlined process will allow us to adopt MCAI safety requirements in a more efficient manner and will reduce safety risks to the public. This process continues to follow all FAA AD issuance processes to meet legal, economic, Administrative Procedure Act, and **Federal Register** requirements. We also continue to meet our technical decision-making responsibilities to identify and correct unsafe conditions on U.S.-certificated products.

This AD references the MCAI and related service information that we considered in forming the engineering basis to correct the unsafe condition. The AD contains text copied from the MCAI and for this reason might not follow our plain language principles.

Discussion

The European Aviation Safety Agency (EASA), which is the Technical Agent for the Member States of the European Community, has issued AD No.: 2006–0294–E, dated September 25, 2006 (referred to after this as ''the MCAI''), to correct an unsafe condition for the specified products. The MCAI states that the aircraft manufacturer has identified a possible failure of the attachment of the propeller blades and

that the propeller hub has to be checked and overhauled. You may obtain further information by examining the MCAI in the AD docket.

Relevant Service Information

Schempp-Hirth Flugzeugbau GmbH has issued Technical Note No. 890–8/868–11, dated September 22, 2006. The actions described in this service information are intended to correct the unsafe condition identified in the MCAI.

FAA's Determination and Requirements of the AD

This product has been approved by the aviation authority of another country, and is approved for operation in the United States. Pursuant to our bilateral agreement with this State of Design Authority, they have notified us of the unsafe condition described in the MCAI and service information referenced above. We are issuing this AD because we evaluated all information provided by the State of Design Authority and determined the unsafe condition exists and is likely to exist or develop on other products of the same type design.

Differences Between This AD and the MCAI or Service Information

We have reviewed the MCAI and related service information and, in general, agree with their substance. But we might have found it necessary to use different words from those in the MCAI to ensure the AD is clear for U.S. operators and is enforceable. In making these changes, we do not intend to differ substantively from the information provided in the MCAI and related service information.

We might have also required different actions in this AD from those in the MCAI in order to follow FAA policies. Any such differences are described in a separate paragraph of the AD. These requirements take precedence over those copied from the MCAI.

FAA's Determination of the Effective Date

An unsafe condition exists that requires the immediate adoption of this AD. The FAA has found that the risk to the flying public justifies waiving notice and comment prior to adoption of this rule because of a possible failure of the attachment of the propeller blades. Therefore, we determined that notice and opportunity for public comment before issuing this AD are impracticable and that good cause exists for making this amendment effective in fewer than 30 days.

Comments Invited

This AD is a final rule that involves requirements affecting flight safety, and we did not precede it by notice and opportunity for public comment. We invite you to send any written relevant data, views, or arguments about this AD. Send your comments to an address listed under the **ADDRESSES** section. Include ''Docket No. FAA–2006–26437; Directorate Identifier 2006–CE–73–AD'' at the beginning of your comments. We specifically invite comments on the overall regulatory, economic, environmental, and energy aspects of this AD. We will consider all comments received by the closing date and may amend this AD because of those comments.

We will post all comments we receive, without change, to *http://dms.dot.gov*, including any personal information you provide. We will also post a report summarizing each substantive verbal contact we receive about this AD.

Authority for This Rulemaking

Title 49 of the United States Code specifies the FAA's authority to issue rules on aviation safety. Subtitle I, section 106, describes the authority of the FAA Administrator. ''Subtitle VII: Aviation Programs,'' describes in more detail the scope of the Agency's authority.

We are issuing this rulemaking under the authority described in ''Subtitle VII, Part A, Subpart III, Section 44701: General requirements.'' Under that section, Congress charges the FAA with promoting safe flight of civil aircraft in air commerce by prescribing regulations for practices, methods, and procedures the Administrator finds necessary for safety in air commerce. This regulation is within the scope of that authority because it addresses an unsafe condition that is likely to exist or develop on products identified in this rulemaking action.

Regulatory Findings

We determined that this AD will not have federalism implications under Executive Order 13132. This AD will not have a substantial direct effect on the States, on the relationship between the national government and the States, or on the distribution of power and responsibilities among the various levels of government.

For the reasons discussed above, I certify that this AD:

(1) Is not a ''significant regulatory action'' under Executive Order 12866;

(2) Is not a ''significant rule'' under DOT Regulatory Policies and Procedures (44 FR 11034, February 26, 1979); and

(3) Will not have a significant economic impact, positive or negative, on a substantial number of small entities under the criteria of the Regulatory Flexibility Act.

We prepared a regulatory evaluation of the estimated costs to comply with this AD and placed it in the AD docket.

List of Subjects in 14 CFR Part 39

Air transportation, Aircraft, Aviation safety, Safety.

Adoption of the Amendment

■ Accordingly, under the authority delegated to me by the Administrator, the FAA amends14 CFR part 39 as follows:

PART 39—AIRWORTHINESS DIRECTIVES

■ 1. The authority citation for part 39 continues to read as follows:

Authority: 49 U.S.C. 106(g), 40113, 44701.

§ 39.13 [Amended]

■ 2. The FAA amends § 39.13 by adding the following new AD:

2006–25–14 SCHEMPP–HIRTH FLUGZEUGBAU GMBH: Amendment 39–14855; Docket No. FAA–2006–26437; Directorate Identifier 2006–CE–73–AD.

Effective Date

(a) This airworthiness directive (AD) becomes effective January 3, 2007.

Affected ADs

(b) None.

Applicability

(c) This AD applies to Model Duo Discus T gliders, serial numbers 1 through 149, certificated in any category.

Reason

(d) The mandatory continuing airworthiness information (MCAI) states the aircraft manufacturer has identified a possible failure of the attachment of the propeller blades and that the propeller hub has to be checked and overhauled.

Actions and Compliance

(e) As of January 3, 2007 (the effective date of this AD), unless already done, do the following actions.

(1) *For propellers with less than 15 hours time-in-service (TIS) as of the effective date of this AD:*

(i) Prior to the first flight of each day, visually inspect the propeller hub in the area of the five propeller blade roots for cracks using a minimum 10x magnifier. If necessary, clean the hub before checking.

(ii) Prior to further flight after any crack is found or upon accumulating 15 hours TIS, whichever occurs first, remove the propeller hub and return to the propeller manufacturer for inspection and overhaul. Send the propeller hub along with the propeller hours time-in-service (TIS) to Technoflug

Leichtflugzeugbau GmbH, Dr. Kurt Steim Strasse 6, D–78713 Schramberg.

(iii) You may remove the propeller hub and return as specified in paragraph (e)(1)(ii) of this AD at any time prior to accumulating 15 hours TIS on the propeller to terminate the inspection requirement of paragraph (e)(1)(i) of this AD.

(2) *For propellers with 15 or more hours TIS as of the effective date of this AD:* Prior to further flight, remove the propeller hub and return to the propeller manufacturer for inspection and overhaul. Send the propeller hub along with the propeller hours time-in-service (TIS) to Technoflug Leichtflugzeugbau GmbH, Dr. Kurt Steim Strasse 6, D–78713 Schramberg.

(3) *For all sailplanes:* With the propeller removed, the powered sailplane can temporarily be used in the sailplane configuration. If the engine battery (at the steel frame between the seats) is not removed, a new weight and balance report is not necessary. After the inspection and overhaul of the propeller hub is done, the propeller must be reinstalled.

FAA AD Differences

Note: This AD differs from the MCAI and/or service information as follows:

(1) The MCAI did not have a required action if cracks were found during the inspection. This AD requires the propeller hub to be overhauled by the manufacturer before further flight if cracks are found.

(2) The MCAI allowed continued flight over the 15 hour propeller TIS limit (up to the annual inspection) if the propeller TIS was less than 15 hours as of the effective date of this AD. For propellers at or less than 15 hours TIS, the FAA is requiring the propeller hub to be overhauled by the manufacturer upon the accumulation of 15 hours TIS or prior to further flight if cracks are found, whichever occurs first.

(3) The service information allows for the pilot to perform the inspection and the removal and reinstallation of the propeller. By FAA regulation (14 CFR part 43), the pilot is not allowed to do these actions and an appropriately-rated mechanic must perform these actions.

(4) The MCAI incorporates the service information. We have modified the procedures in the service information as stated above and incorporated the procedures into this AD. This AD only references the service information.

Other FAA AD Provisions

(f) The following provisions also apply to this AD:

(1) Alternative Methods of Compliance (AMOCs): The Manager, Standards Staff, FAA, ATTN: Gregory Davison Aerospace Engineer, FAA, Small Airplane Directorate, 901 Locust, Room 301, Kansas City, Missouri 64106; telephone: (816) 329–4130; fax: (816) 329–4090, has the authority to approve AMOCs for this AD, if requested using the procedures found in 14 CFR 39.19.

(2) Airworthy Product: For any requirement in this AD to obtain corrective actions from a manufacturer or other source, use these actions if they are FAA-approved. Corrective actions are considered FAA-approved if they are approved by the State of Design Authority (or their delegated agent). You are required to assure the product is airworthy before it is returned to service.

(3) Reporting Requirements: For any reporting requirement in this AD, under the provisions of the Paperwork Reduction Act (44 U.S.C. 3501 et seq.), the Office of Management and Budget (OMB) has approved the information collection requirements and has assigned OMB Control Number 2120–0056.

Related Information

(g) Refer to European Aviation Safety Agency (EASA) AD No.: 2006–0294–E, dated September 25, 2006, and Schempp-Hirth Flugzeugbau GmbH Technical Note No. 890–8/868–11, dated September 22, 2006, for related information.

Material Incorporated by Reference

(h) None.

Issued in Kansas City, Missouri on December 7, 2006.

John R. Colomy,

Acting Manager, Small Airplane Directorate, Aircraft Certification Service.

[FR Doc. E6–21212 Filed 12–13–06; 8:45 am]

BILLING CODE 4910–13–P

DEPARTMENT OF TRANSPORTATION

Federal Aviation Administration

14 CFR Part 39

[Docket No. FAA–2006–26414; Directorate Identifier 2006–NE–42–AD; Amendment 39–14854; AD 2006–25–13]

RIN 2120–AA64

Airworthiness Directives; Rolls-Royce Corporation AE 2100D3 Turboprop Engines

AGENCY: Federal Aviation Administration (FAA), Department of Transportation (DOT).

ACTION: Final rule; request for comments.

SUMMARY: The FAA is adopting a new airworthiness directive (AD) for Rolls-Royce Corporation (RRC) AE 2100D3 turboprop engines. This AD requires removing certain part number (P/N) compressor cone shaft assemblies at a new reduced cyclic life limit of 5,000 engine cycles. This AD results from low-cycle-fatigue testing and analysis of certain P/N compressor cone shaft assemblies, by RRC. We are issuing this AD to prevent uncontained failure of the compressor cone shaft assembly, leading to engine shutdown and damage to the airplane.

DATES: This AD becomes effective December 29, 2006.

We must receive any comments on this AD by February 12, 2007.

ADDRESSES: Use one of the following addresses to comment on this AD:

- DOT Docket Web site: Go to *http://dms.dot.gov* and follow the instructions for sending your comments electronically.
- Governmentwide rulemaking Web site: Go to *http://www.regulations.gov* and follow the instructions for sending your comments electronically.
- Mail: Docket Management Facility; U.S. Department of Transportation, 400 Seventh Street, SW., Nassif Building, Room PL–401, Washington, DC 20590–0001.
- Fax: (202) 493–2251.
- Hand Delivery: Room PL–401 on the plaza level of the Nassif Building, 400 Seventh Street, SW., Washington, DC, between 9 a.m. and 5 p.m., Monday through Friday, except Federal holidays.

Contact Rolls-Royce Corporation, P.O. Box 420, Indianapolis, IN 46206–0420; telephone (317) 230–6400; fax (317) 230–4243 for the service information identified in this AD.

FOR FURTHER INFORMATION CONTACT: Michael Downs, Aerospace Engineer, Chicago Aircraft Certification Office, FAA, 2300 East Devon Avenue, Des Plaines, IL 60018–4696; telephone (847) 294–7870; fax (847) 294–7834.

SUPPLEMENTARY INFORMATION: RRC conducted low-cycle-fatigue testing, and strength and life analysis, of compressor cone shaft assemblies, P/Ns 23050728, 23070729, and 23076017. The study concluded that these compressor cone shaft assemblies have a lower fatigue life than originally calculated. This condition, if not corrected, could result in uncontained failure of the compressor cone shaft assembly, leading to engine shutdown and damage to the airplane.

FAA's Determination and Requirements of This AD

Although no airplanes that are registered in the United States use these RRC AE 2100D3 turboprop engines, the possibility exists that the engines could be used on airplanes that are registered in the United States in the future. The unsafe condition described previously is likely to exist or develop on other AE 2100D3 turboprop engines of the same type design. We are issuing this AD to prevent uncontained failure of the compressor cone shaft assembly, leading to engine shutdown and damage to the airplane. This AD requires removing compressor cone shaft assemblies, P/Ns 23050728, 23070729, and 23076017, at a new reduced cyclic life limit of 5,000 engine cycles. The original cyclic life limit was 20,000 engine cycles. RRC will revise Chapter 5 of the maintenance

manual to show the new reduced cyclic life limit of 5,000 engine cycles.

FAA's Determination of the Effective Date

Since there are currently no domestic operators of this engine model, notice and opportunity for public comment before issuing this AD are unnecessary. A situation exists that allows the immediate adoption of this regulation.

Comments Invited

This AD is a final rule that involves requirements affecting flight safety and was not preceded by notice and an opportunity for public comment; however, we invite you to send us any written relevant data, views, or arguments regarding this AD. Send your comments to an address listed under **ADDRESSES**. Include ''AD Docket No. FAA–2006–26414; Directorate Identifier 2006–NE–42–AD'' in the subject line of your comments. We specifically invite comments on the overall regulatory, economic, environmental, and energy aspects of the rule that might suggest a need to modify it.

We will post all comments we receive, without change, to *http://dms.dot.gov,* including any personal information you provide. We will also post a report summarizing each substantive verbal contact with FAA personnel concerning this AD. Using the search function of the DMS Web site, anyone can find and read the comments in any of our dockets, including the name of the individual who sent the comment (or signed the comment on behalf of an association, business, labor union, etc.). You may review the DOT's complete Privacy Act Statement in the **Federal Register** published on April 11, 2000 (65 FR 19477–78) or you may visit *http://dms.dot.gov.*

Examining the AD Docket

You may examine the docket that contains the AD, any comments received, and any final disposition in person at the Docket Management Facility Docket Office between 9 a.m. and 5 p.m., Monday through Friday, except Federal holidays. The Docket Office (telephone (800) 647–5227) is located on the plaza level of the Department of Transportation Nassif Building at the street address stated in **ADDRESSES**. Comments will be available in the AD docket shortly after the DMS receives them.

Authority for This Rulemaking

Title 49 of the United States Code specifies the FAA's authority to issue rules on aviation safety. Subtitle I, Section 106, describes the authority of the FAA Administrator. Subtitle VII, Aviation Programs, describes in more detail the scope of the Agency's authority.

We are issuing this rulemaking under the authority described in Subtitle VII, Part A, Subpart III, Section 44701, ''General requirements.'' Under that section, Congress charges the FAA with promoting safe flight of civil aircraft in air commerce by prescribing regulations for practices, methods, and procedures the Administrator finds necessary for safety in air commerce. This regulation is within the scope of that authority because it addresses an unsafe condition that is likely to exist or develop on products identified in this rulemaking action.

Regulatory Findings

We have determined that this AD will not have federalism implications under Executive Order 13132. This AD will not have a substantial direct effect on the States, on the relationship between the national Government and the States, or on the distribution of power and responsibilities among the various levels of government.

For the reasons discussed above, I certify that the regulation:

1. Is not a ''significant regulatory action'' under Executive Order 12866;

2. Is not a ''significant rule'' under the DOT Regulatory Policies and Procedures (44 FR 11034, February 26, 1979); and

3. Will not have a significant economic impact, positive or negative, on a substantial number of small entities under the criteria of the Regulatory Flexibility Act.

We prepared a summary of the costs to comply with this AD and placed it in the AD Docket. You may get a copy of this summary at the address listed under **ADDRESSES**.

List of Subjects in 14 CFR Part 39

Air transportation, Aircraft, Aviation safety, Safety.

Adoption of the Amendment

■ Under the authority delegated to me by the Administrator, the Federal Aviation Administration amends part 39 of the Federal Aviation Regulations (14 CFR part 39) as follows:

PART 39—AIRWORTHINESS DIRECTIVES

■ 1. The authority citation for part 39 continues to read as follows:

Authority: 49 U.S.C. 106(g), 40113, 44701.

§ 39.13 [Amended]

■ 2. The FAA amends § 39.13 by adding the following new airworthiness directive:

2006–25–13 Rolls-Royce Corporation (formerly Allison Engine Company, Allison Gas Turbine Division, and Detroit Diesel Allison): Amendment 39–14854. Docket No. FAA–2006–26414; Directorate Identifier 2006–NE–42–AD.

Effective Date

(a) This airworthiness directive (AD) becomes effective December 29, 2006.

Affected ADs

(b) None.

Applicability

(c) This AD applies to Rolls-Royce Corporation (RRC) AE 2100D3 turboprop engines with a compressor cone shaft assembly, part number 23050728, 23070729, or 23076017, installed. These engines are installed on, but not limited to, Lockheed Martin C–130J military transport airplanes.

Unsafe Condition

(d) This AD results from low-cycle-fatigue testing and analysis of the affected compressor cone shaft assemblies, by RRC. We are issuing this AD to prevent uncontained failure of the compressor cone shaft assembly, leading to engine shutdown and damage to the airplane.

Compliance

(e) You are responsible for having the actions required by this AD performed within the compliance times specified unless the actions have already been done.

Removal of Compressor Cone Shaft Assemblies

(f) After the effective date of this AD, remove compressor cone shaft assemblies from service at the new reduced life limit of 5,000 engine cycles.

Alternative Methods of Compliance

(g) The Manager, Engine Certification Office, has the authority to approve alternative methods of compliance for this AD if requested using the procedures found in 14 CFR 39.19.

Related Information

(h) Rolls-Royce Corporation Alert Service Bulletin No. AE 2100D3–A–72–249, dated March 14, 2006, pertains to the subject of this AD.

Material Incorporated by Reference

(i) None.

Issued in Burlington, Massachusetts, on December 6, 2006.

Diane Cook,

Acting Manager, Engine and Propeller Directorate, Aircraft Certification Service.

[FR Doc. E6–21185 Filed 12–13–06; 8:45 am]

BILLING CODE 4910–13–P

DEPARTMENT OF TRANSPORTATION

Federal Aviation Administration

14 CFR Part 71

[Docket FAA 2006–25671; Airspace Docket 06–AWP–15]

Establishment of Class D Airspace; Castle Airport, Atwater, CA

AGENCY: Federal Aviation Administration (FAA), DOT.

ACTION: Final rule.

SUMMARY: This action establishes Class D airspace at Castle Airport, Atwater, CA. A contract Airport Traffic Control Tower (ATCT) is being established at Castle Airport, Atwater, CA, which will meet criteria for Class D airspace. Class D airspace is required when the ATCT is open, and to contain and protect Standard Instrument Approach Procedures (SIAPs) and other Instrument Flight Rules (IFR) operations at the airport. This action would establish Class D airspace extending upward from the surface to 2,500 feet Mean Sea Level (MSL) within a 4.5 nautical mile radius of the airport.

EFFECTIVE DATE: 0901 UTC, January 18, 2007. The Director of the Federal Register approves this incorporation by reference action under title 1, Code of Federal Regulations, part 51, subject to the annual revision of FAA Order 7400.9 and publication of conforming amendments.

FOR FURTHER INFORMATION CONTACT: Larry Tonish, System Support Specialists, Federal Aviation Administration, Western Service Area, 15000 Aviation Boulevard, Lawndale, CA 90261; telephone (310) 725–6539.

SUPPLEMENTARY INFORMATION:

History

On November 13, 2006, the FAA proposed to amend Title 14 Code of Federal Regulations part 71 (CFR part 71) to establish Class D airspace at Castle Airport, Atwater, CA, (71FR 66144). An ATCT is being contracted at Castle Airport, and Class D airspace is required during the hours the ATCT is open. Class D controlled airspace is necessary for the safety of aircraft executing SIAPs and other IFR operations at Castle Airport. Class D airspace will be effective during specified dates and times established in advance by a Notice to Airmen. The effective date and time will, thereafter, be published in the Airport/Facility Directory.

Interested parties were invited to participate in this rule making proceeding by submitting written comments on the proposal to the FAA. No comments were received. Class D airspace designations for airspace areas extending upward from the surface of the earth are published in Paragraph 5000 of FAA Order 7400.9P, dated September 1, 2006, and effective September 15, 2006, which is incorporated by reference in 14 CFR 71.1. The Class D airspace designations listed in this document would be published subsequently in the Order.

The Rule

This amendment to 14 CFR part 71 establishes Class D airspace at Castle Airport, Atwater, CA. An Airport Traffic Tower (ATCT) is being established at Castle Airport, Atwater, CA, which will meet criteria for Class D airspace.

The FAA has determined that this regulation only involves an established body of technical regulations for which frequent and routine amendments are necessary to keep them operationally current. Therefore, this regulation: (1) Is not a ''significant regulatory action'' under Executive Order 12866; (2) is not a ''significant rule'' under DOT Regulatory Policies and Procedures (44 FR 11034; February 26, 1979); and (3) does not warrant preparation of a regulatory evaluation as the anticipated impact is so minimal. Since this is a routine matter that will only affect air traffic procedures and air navigation, it is certified that this rule, when promulgated, will not have a significant economic impact on a substantial number of small entities under the criteria of the Regulatory Flexibility Act.

List of Subjects in 14 CFR Part 71

Airspace, Incorporation by reference, Navigation (air).

Adoption of the Amendment

■ In consideration of the foregoing, the Federal Aviation Administration amends 14 CFR part 71 as follows:

PART 71—DESIGNATION OF CLASS A, CLASS B, CLASS C, CLASS D, AND CLASS E AIRSPACE AREAS; ROUTES; AND REPORTING POINTS

■ 1. The authority citation for 14 CFR part 71 continues to read as follows:

Authority: 49 U.S.C. 106(g), 40103, 40113, 40120; E.O. 10854, 24 FR 9565, 3 CFR, 1959–1963 Comp., p. 389.

§ 71.1 [Amended]

■ 2. The incorporation by reference in 14 CFR 71.1 of the Federal Aviation Administration Order 7400.9P, Airspace Designations and Reporting Points, dated September 1, 2006, and effective September 15, 2006, is amended as follows:

Paragraph 5000; Class D Airspace area extending upward from the surface of the earth.

* * * * *

AWP CA D Castle Airport, Atwater, CA [NEW]

Castle Airport, Atwater, CA
(Lat. 37°22′50″ N, long. 120°34′05″ W)

That airspace extending upward from the surface to 2,500 feet MSL beginning at lat. 37°18′34″ N., long. 120°35′54″ W. and extending clockwise around the 4.5 nautical mile radius of the Castle Airport to lat. 37°21′06″ N., long. 120°28′53″, thence to the point of beginning. This Class D airspace is effective during the specific days and times established in advance by a Notice to Airmen. The effective days and times will thereafter be continuously published in the Airport/Facility Directory.

* * * * *

Issued in Los Angeles, California on December 11, 2006.

Leonard Mobley,

Acting Area Director, Western Terminal Operations, Western Terminal Area Office.

[FR Doc. 06–9694 Filed 12–13–06; 8:45 am]

BILLING CODE 4910–13–M

DEPARTMENT OF TRANSPORTATION

Federal Aviation Administration

14 CFR Part 71

[Docket No. FAA–2006–26244; Airspace Docket No. 06–AAL–36]

RIN 2120–AA66

Establishment of Alaskan High Altitude Reporting Points; AK

AGENCY: Federal Aviation Administration (FAA), DOT.

ACTION: Final rule.

SUMMARY: This action establishes four high altitude reporting points AYZOL, BORAN, EMSOW, and TIBOY in Alaska. The designation of these high altitude reporting points is needed to facilitate the separation of air traffic in Alaska.

DATES: *Effective Date:* 0901 UTC, March 15, 2007. The Director of the Federal Register approves this incorporation by reference action under 1 CFR part 51, subject to the annual revision of FAA Order 7400.9 and publication of conforming amendments.

FOR FURTHER INFORMATION CONTACT: Ken McElroy, Airspace and Rules, Office of System Operations and Safety, Federal Aviation Administration, 800 Independence Avenue, SW.,

Washington, DC 20591; telephone: (202) 267–8783.

SUPPLEMENTARY INFORMATION:

Background

The non-compulsory reporting points AYZOL, BORAN, EMSOW, and TIBOY are in use by the Anchorage Center on a daily basis and are needed for the separation of air traffic.

The Rule

This action amends Title 14 Code of Federal Regulations (14 CFR) part 71 by establishing four high altitude reporting points, AYZOL, BORAN, EMSOW, and TIBOY in Alaska. The FAA has determined these reporting points are needed to support the NAS. This action improves air safety and facilitates the management of air traffic in Alaska. Since this action involves the designation of reporting points already in use by ATC, no additional impact will be incurred by the public. Therefore, I find that notice or public procedure under 5 U.S.C. 553(b) is impractical and contrary to the public interest.

Alaskan High Altitude Reporting Points are published in paragraph 7005 of FAA Order 7400.9P September 1, 2006, and effective September 15, 2006, which is incorporated by reference in 14 CFR 71.1. The Alaskan High Altitude Reporting Points listed in this document will be published subsequently in the Order.

The FAA has determined that this regulation only involves an established body of technical regulations for which frequent and routine amendments are necessary to keep them operationally current. Therefore, this proposed regulation: (1) Is not a ''significant regulatory action'' under Executive Order 12866; (2) is not a ''significant rule'' under Department of Transportation (DOT) Regulatory Policies and Procedures (44 FR 11034; February 26, 1979); and (3) does not warrant preparation of a regulatory evaluation as the anticipated impact is so minimal. Since this is a routine matter that will only affect air traffic procedures and air navigation, it is certified that this rule, when promulgated, will not have a significant economic impact on a substantial number of small entities under the criteria of the Regulatory Flexibility Act.

Environmental Review

The FAA has determined that this action qualifies for categorical exclusion under the National Environmental Policy Act in accordance with FAA Order 1050.1E, ''Environmental Impacts: Policies and Procedures,'' paragraph 311a. This airspace action is not expected to cause any potentially significant environmental impacts, and no extraordinary circumstances exist that warrant preparation of an environmental assessment.

List of Subjects in 14 CFR Part 71

Airspace, Incorporation by reference, Navigation (air).

Adoption of the Amendment

■ In consideration of the foregoing, the Federal Aviation Administration amends 14 CFR part 71 as follows:

PART 71—DESIGNATION OF CLASS A, B, C, D, AND E AIRSPACE AREAS; AIR TRAFFIC SERVICE ROUTES; AND REPORTING POINTS

■ 1. The authority citation for part 71 continues to read as follows:

Authority: 49 U.S.C. 106(g), 40103, 40113, 40120; E.O. 10854, 24 FR 9565, 3 CFR, 1959–1963 Comp., p. 389.

§ 71.1 [Amended]

■ 2. The incorporation by reference in 14 CFR 71.1 of FAA Order 7400.9P, Airspace Designations and Reporting Points, dated September 1, 2006, and effective September 15, 2006, is amended as follows:

Paragraph 7005 Alaskan High Altitude Reporting Points.

* * * * *

7001 [Amend]

AYZOL AK [New]

* * * * *

BORAN AK [New]

* * * * *

EMSOW AK [New]

* * * * *

TIBOY AK [New]

* * * * *

Issued in Washington, DC on December 7, 2006.

Edith V. Parish,

Acting Manager, Airspace and Rules.

[FR Doc. E6–21190 Filed 12–13–06; 8:45 am]

BILLING CODE 4910–13–P

DEPARTMENT OF TRANSPORTATION

Federal Highway Administration

23 CFR Part 655

[FHWA Docket No. FHWA–2005–23182]

RIN 2125–AF16

Traffic Control Devices on Federal-Aid and Other Streets and Highways; Standards

AGENCY: Federal Highway Administration (FHWA), DOT.

ACTION: Final rule.

SUMMARY: The FHWA is revising its regulation that prescribes procedures for obtaining basic uniformity of traffic control devices on Federal-aid and other streets and highways. This final rule makes some nomenclature changes, removes outdated references, and provides clarification on the meaning of roads ''open to public travel'' and ''substantial conformance.''

DATES: Effective January 16, 2007.

FOR FURTHER INFORMATION CONTACT: Mr. Hari Kalla, Office of Transportation Operations, (202) 366–5915, or Mr. Raymond Cuprill, Office of the Chief Counsel, (202) 366–0791, U.S. Department of Transportation, Federal Highway Administration, 400 Seventh Street, SW., Washington, DC 20590. Office hours are from 7:45 a.m. to 4:15 p.m. e.t., Monday through Friday, except Federal holidays.

SUPPLEMENTARY INFORMATION:

Electronic Access

This document, the notice of proposed rulemaking (NPRM), and all of the comments received may be viewed online through the Document Management System (DMS) at *http://dms.dot.gov.* The DMS is available 24 hours each day, 365 days each year. Electronic submission and retrieval help and guidelines are available under the help section of the Web site.

An electronic copy of this document may also be downloaded by accessing the Office of the Federal Register's home page at *http://www.archives.gov* or the Government Printing Office's Web page at *http://www.gpoaccess.gov/nara.* An electronic version of this document may also be downloaded at the FHWA Web site: *http://mutcd.fhwa.dot.gov.*

Background

The Manual on Uniform Traffic Control Devices (MUTCD), also referred to as the Manual, is developed and approved by the Federal Highway Administration and recognized as the national standard for all traffic control

devices installed on any street, highway, or shared-use path open to public travel in accordance with 23 U.S.C. 109(d) and 402(a). It is incorporated by reference into the Code of Federal Regulations at 23 CFR part 655. The FHWA proposed a number of changes to 23 CFR 655 in order to update its regulations. The FHWA proposed removing certain outdated references, making certain nomenclature changes, and providing clarification of certain terms.

Discussion of Comments Received to the Notice of Proposed Rulemaking (NPRM)

On April 25, 2006, the FHWA published a NPRM in the **Federal Register** at 71 FR 23877 to provide an opportunity for public comment on the proposed changes to 23 CFR part 655. In response to the NPRM, the FHWA received comments to the docket from 20 entities, including 4 national associations, 8 State transportation agencies (California, Maryland, Michigan, North Carolina, Ohio, Oregon, Washington, and Minnesota), 2 city transportation agencies (City of Phoenix and City of Tucson), 1 private company (KDD and Associates), and 4 private individuals. The national associations included the American Association of State Highway and Transportation Officials (AASHTO), the Advocates for Highway and Auto Safety (AHAS), the American Traffic Safety Services Association (ATSSA), and the National Committee on Uniform Traffic Control Devices (NCUTCD). One of the 20 docket submissions was a request from the NCUTCD for a time extension of the docket comment period. In response to this request, on June 14, 2006, the FHWA published a notice in the **Federal Register** at 71 FR 34297 to extend the comment closing date from June 26, 2006, to July 21, 2006.

While four of the docket submissions addressed all of the proposed changes, the majority of the letters to the docket addressed specific proposed changes. The FHWA considered each of these comments in adopting this final rule. These issues are identified and addressed under the appropriate section below.

Section-by-Section Discussion of Changes

Section 655.601 Purpose

The FHWA is removing the reference to the Standard Alphabets for Highway Signs (SAHS) by removing paragraph (b). The SAHS, 1966 Edition, is outdated and no longer exists as a separate document. The FHWA now publishes the SAHS as part of the Standard Highway Signs (SHS) Book. The SHS Book is referenced in MUTCD Section 1A.11 and throughout MUTCD Part 2. The SHS Book is also posted on the MUTCD Web page at *http://mutcd.fhwa.dot.gov.* The FHWA received five comments in support of this change and no comments opposed. This change will be adopted without modification in the final rule.

Section 655.603 Standards

''Open to Public Travel''

The FHWA is revising the language in 23 CFR 655.603(a) to clarify that, for the purpose of MUTCD applicability, the phrase ''open to public travel'' includes toll roads and roads within shopping centers, parking lots, airports, sports arenas, and other similar business and recreation facilities that are privately owned but where the public is allowed to travel without access restrictions. Military bases and other gated properties where access is restricted and private railroad grade crossings are not included in the term ''open to public travel.''

Eleven comments generally supported this clarification but offered potential areas of concern for consideration by the FHWA, and one comment opposed this clarification. Based on the comments received, the FHWA has modified the clarification to include parking lots on the list of examples where the term ''open to public travel'' applies, and to include military bases and other gated properties as examples of what is not included in the term. We have also indicated that the clarification of ''open to public travel'' is for the purpose of MUTCD applicability only. It is important to note that FHWA's intent is only to provide some general examples of what is meant by ''open to public travel'' because we recognize that it would not be possible to list them all.

Of the 11 docket comments in support of this clarification, some expressed the following concerns: (1) This could create an unreasonable State responsibility to mandate compliance without the necessary authority; (2) Without enforcement, the intent of this change would be undermined; (3) It is not reasonable to expect all private property owners to have the means and expertise to place and maintain standard traffic control devices; and (4) The language needs to consider State law.

The FHWA does not believe it is necessary for State and/or local highway agencies to have specific authority or enforcement responsibility for traffic control devices on private roads. This change to 23 CFR part 655 does not require State or local agencies to police the private properties open to public travel to ensure compliance with the MUTCD. However, this change does make it clear that private roads open to public travel are subject to the same traffic control standards as public streets and highways. Therefore, owners or parties responsible for such private roads are encouraged to bring the traffic control devices into compliance with the MUTCD and other applicable State Manuals.

The FHWA believes that the change to 23 CFR 655.603(a) will clarify the application of this term, create awareness of the applicability of the MUTCD to certain private properties, improve safety, and increase the uniformity of traffic control devices on roads used by the general public.

''Substantial Conformance''

23 CFR 655.603(b)(1) provides that where State or other Federal agency MUTCDs or supplements are required, they shall be in ''substantial conformance'' with the National MUTCD as approved by the FHWA Division Administrator. The FHWA proposed to define ''substantial conformance'' to mean that the State MUTCD or supplement shall conform as a minimum to the standard statements included in the National MUTCD. Standard statements in the MUTCD describe required practices and are indicated by the term ''shall.'' The FHWA also proposed to define ''substantial conformance'' to mean that the guidance statements contained in the National MUTCD also are expected to be in the State Manual or supplement unless the reason for not including it is satisfactorily explained based on engineering judgment or a documented engineering study. Guidance statements in the MUTCD describe recommended practices and are indicated by the term ''should.'' Under the proposed definition, a State Manual or supplement could not be less prescriptive than the MUTCD but it could be more prescriptive; meaning, for example, that a guidance or ''should'' statement in the National MUTCD could not be an option in the State Manual, but that it could be a standard or ''shall'' statement. The Division Administrator and the FHWA Associate Administrator of the Federal Lands Highway Program have the flexibility to determine on a case-by-case basis the degree of variation allowed.

Seven comments generally supported this change but offered potential areas of concern for consideration by the FHWA, and 10 comments opposed this proposed change. Some of the areas of

concern from those who supported the change included the following: (1) Agree that there needs to be a definition but do not agree that all ''shalls'' must be included. (2) Agree, but what happens if States have specific legislation which conflicts with the standards. (3) The proposed definition is fundamentally sound, but will be challenging to meet because of statutory laws that differ from the MUTCD. (4) This change puts unfair liability on cities, particularly the part of the definition that suggests State Manuals or supplements cannot be less prescriptive than the National MUTCD. In urban conditions, there may be any number of reasons why a less prescriptive proposal would still meet the goal of providing adequate uniformity (*i.e.*, the MUTCD requires overhead signs for all HOV but in urban areas this may not be possible).

Some of the comments from those opposed to this change included the following: (1) A State's right to use alternative techniques that are equal to or better than the MUTCD should be protected. (2) The definition does not allow flexibility to accommodate State and local issues. (3) States should retain the option to deviate from standard statements. (4) In some situations, legislative action would put the State in conflict with the National MUTCD.

The FHWA agrees with the comments above that suggest this regulation should address the impact of State laws that may force non-conformance with the National MUTCD and should allow more flexibility to accommodate State and local issues. Therefore, in addition to the definition provided for substantial conformance as it applies to the standard statements in the National MUTCD, the FHWA is also adding the following sentence to 23 CFR 655.603(b)(1) to address these comments: ''The FHWA Division Administrators and Associate Administrator for the Federal Lands Highway Program may grant exceptions in cases where a State MUTCD or supplement cannot conform to standard statements in the National MUTCD because of the requirements of a specific State law that was in effect prior to the effective date of this final rule, provided that the Division Administrator or Associate Administrator determines based on information available and documentation received from the State that the non-conformance does not create a safety concern.'' In addition to the definition for substantial conformance as it applies to the guidance statements in the National MUTCD, the FHWA is modifying the sentence to read: ''The guidance statements contained in the National MUTCD shall also be in the State Manual or supplement unless the reason for not including it is satisfactorily explained based on engineering judgment, specific conflicting State law, or a documented engineering study.'' Finally, since the FHWA is adding flexibility in the description of substantial conformance as it relates to standard and guidance statements in the National MUTCD, the FHWA agrees that describing State Manuals or supplements in terms of being either ''less prescriptive'' or ''more prescriptive'' is not necessary and the language has been removed from this final rule.

These additional comments were also submitted to the docket and were handled as follows: (1) Defining substantial conformance should be left up to the Division Office in each State. (2) Eliminates right of practitioner to exercise engineering judgment and destroys the only current method by which FHWA employees get to consult and exchange ideas with practitioners. (3) States should not have to incur cost of engineering study to deviate from guidance statements. The FHWA believes that the concern about the Division Office involvement is already addressed because the Division Administrator is an integral part of the process for adopting State Manuals or supplements and this does not change by incorporating any of these changes in the final rule. The FHWA believes that the comment about ''engineering judgment'' is also addressed in that States have a choice of using engineering judgment to explain deviations from the guidance statements and unlike an engineering study, engineering judgment does not involve a cost. One comment suggested that FHWA should conduct a thorough review of State exceptions or supplements and search for ways to improve the 2003 MUTCD before making this change. The FHWA believes that this comment is beyond the intent of this rulemaking activity.

''Issuance Date''

In the current § 655.603(b)(1), States or other Federal agencies are required to adopt the National MUTCD within 2 years of issuance any changes. The term ''issuance date'' is incorrect nomenclature and the FHWA is changing this term to ''effective date.'' The effective date occurs 30 days after a final rule is published in the **Federal Register** in order to allow parties affected by the rule a reasonable time to prepare for the effective date of a rule, or to take any other action which a final rule may prompt. The FHWA is also moving this discussion to new paragraph (b)(3). The FHWA received four comments in support of this change and no comments opposed. This change will be adopted without modification in the final rule.

Two-Year Adoption Period for States That Automatically Adopt the MUTCD

The FHWA is revising the second sentence in § 655.603(b)(1) to include language that will provide the Division Administrators and the Associate Administrator of the Federal Lands Highway Program the flexibility to allow States that automatically adopt the MUTCD immediately upon the effective date, the option of a 2-year adoption period. This will give States the opportunity to use their existing stocks of certain noncompliant traffic control devices and complete construction projects with previously approved plans that have certain non-compliant traffic control devices under the new MUTCD. The FHWA is also moving this discussion to new § 655.603(b)(3). The FHWA received five comments in support of this change and no comments opposed. This change will be adopted without modification in the final rule.

Reorganization and Editorial Changes

In 23 CFR 655.603(b)(2), the FHWA is combining the first sentence, which gives the FHWA Associate Administrator of the Federal Lands Highway Program approval authority for Federal land management agencies' MUTCDs, with the discussion in 23 CFR 655.603(b)(1) which discusses the Division Administrator's authority to approve State MUTCDs and supplements. The second sentence in paragraph (b)(2) will now become the first and only sentence for paragraph (b)(2).

The FHWA is amending § 655.603(c) by removing footnote number and footnote reference ''2'' and adding in its place footnote number and footnote reference ''1''.

The FHWA is moving the discussion in § 655.603(d)(4) to § 655.603(d)(1). The discussion in § 655.603(d)(4) about the FHWA's option to establish target dates for achieving compliance with changes in the MUTCD is more appropriate for inclusion in § 655.603(d)(1). Therefore, § 655.603(d)(4) is removed.

The FHWA is removing § 655.603(e). This paragraph was originally included when the Specific Service Sign Program was first adopted on January 23, 1969, so that interested persons would be directed to the MUTCD for more details. Since the Specific Service Sign Program has been in the MUTCD for 35 years and

the public is very familiar with this program, the FHWA believes that this information is no longer necessary or appropriate for inclusion in Title 23, Code of Federal Regulations.

The FHWA received three comments in support and no comments opposed to the above reorganization and editorial changes. These changes will be adopted without modification in the final rule.

Section 655.604 Achieving Basic Uniformity

In § 655.604, paragraphs (a) and (b) indicate that the systematic upgrading of existing traffic control devices and installation of devices should be based on inventories made in accordance with 23 CFR 1204.4. That section refers to a program required by the former Highway Safety Program Standard Number 13, Traffic Engineering Services (23 CFR 1204.4), a NHTSA regulation that no longer exists. Therefore, the FHWA is removing this reference to 23 CFR 1204.4. The FHWA received five comments in support of this change and no comments opposed. Two of the comments that supported this change and understood why we are removing the outdated reference, did not agree with downgrading the contents of 23 CFR 1204.4 from standards to guidelines. This particular comment is outside the scope of this effort to update the information in 23 CFR part 655 and has not been addressed in this document. This change will be adopted without modification in the final rule.

Rulemaking Analysis and Notices

Executive Order 12866 (Regulatory Planning and Review) and U.S. DOT Regulatory Policies and Procedures

The FHWA has determined that this action would not be a significant regulatory action within the meaning of Executive Order 12866 or significant within the meaning of U.S. Department of Transportation regulatory policies and procedures. These changes are not anticipated to adversely affect, in any material way, any sector of the economy. The FHWA expects that these changes will provide clarity at little or no additional expense to public agencies or the motoring public. In addition, these changes would not create a serious inconsistency with any other agency's action or materially alter the budgetary impact of any entitlements, grants, user fees, or loan programs. Therefore, a full regulatory evaluation is not required.

Regulatory Flexibility Act

In compliance with the Regulatory Flexibility Act (Pub. L. 96–354, 5 U.S.C. 601–612), the FHWA has evaluated the effects of these changes on small entities and has determined that this action would not have a significant economic impact on a substantial number of small entities.

This rule updates the authorities of the FHWA and referenced documents regarding MUTCD compliance on existing highways. Such updates will provide transportation entities with the appropriate points of contact regarding the MUTCD. The FHWA hereby certifies that these revisions would not have a significant economic impact on a substantial number of small entities.

Unfunded Mandates Reform Act of 1995

This final rule would not impose unfunded mandates as defined by the Unfunded Mandates Reform Act of 1995 (Pub. L. 104–4, 109 Stat. 48, March 22, 1995). This action will not result in the expenditure by State, local, and tribal governments, in the aggregate, or by the private sector, of $128.1 million or more in any one year (2 U.S.C. 1532).

Executive Order 13132 (Federalism)

This action has been analyzed in accordance with the principles and criteria contained in Executive Order 13132 dated August 4, 1999, and the FHWA has determined that this action would not have sufficient federalism implications to warrant the preparation of a federalism assessment. The FHWA has also determined that this rulemaking will not preempt any State law or State regulation or affect the States' ability to discharge traditional State governmental functions.

Executive Order 13175 (Tribal Consultation)

The FHWA has analyzed this action under Executive Order 13175, dated November 6, 2000, and believes that it would not have substantial direct effects on one or more Indian tribes; would not impose substantial direct compliance costs on Indian tribal governments; and would not preempt tribal law. Therefore, a tribal summary impact statement is not required.

Executive Order 13211 (Energy Effects)

The FHWA has analyzed this action under Executive Order 13211, Actions Concerning Regulations That Significantly Affect Energy Supply, Distribution, or Use. We have determined that it is not a significant energy action under that order because it is not likely to have a significant adverse effect on the supply, distribution, or use of energy. Therefore, a Statement of Energy Effects under Executive Order 13211 is not required.

Executive Order 12372 (Intergovernmental Review)

Catalog of Federal Domestic Assistance program Number 20.205, Highway Planning and Construction. The regulations implementing Executive Order 12372 regarding intergovernmental consultation on Federal programs and activities apply to this program.

Paperwork Reduction Act

Under the Paperwork Reduction Act of 1995 (PRA) (44 U.S.C. 3501, *et seq.*), Federal agencies must obtain approval from the Office of Management and Budget (OMB) for each collection of information they conduct, sponsor, or require through regulations. The FHWA has determined that this action does not contain collection information requirements for purposes of the PRA.

Executive Order 12988 (Civil Justice Reform)

This action meets applicable standards in sections 3(a) and 3(b)(2) of Executive Order 12988, Civil Justice Reform, to minimize litigation, eliminate ambiguity, and reduce burden.

Executive Order 13045 (Protection of Children)

The FHWA has analyzed this action under Executive Order 13045, Protection of Children from Environmental Health Risks and Safety Risks. The FHWA certifies that this action would not concern an environmental risk to health or safety that may disproportionately affect children.

Executive Order 12630 (Taking of Private Property)

The FHWA does not anticipate that this action would affect a taking of private property or otherwise have taking implications under Executive Order 12630, Governmental Actions and Interference with Constitutionally Protected Property Rights.

National Environmental Policy Act

The agency has analyzed this action for the purpose of the National Environmental Policy Act of 1969 (42 U.S.C. 4321–4347) and has determined that it would not have any effect on the quality of the environment.

Regulation Identification Number

A regulation identification number (RIN) is assigned to each regulatory action listed in the Unified Agenda of Federal Regulations. The Regulatory Information Service Center publishes the Unified Agenda in April and

October of each year. The RIN contained in the heading of this document can be used to cross reference this action with the Unified Agenda.

List of Subjects in 23 CFR Part 655

Design standards, Grant programs—transportation, Highways and roads, Incorporation by reference, Signs, Traffic regulations.

Issued on: December 7, 2006.

J. Richard Capka,

Federal Highway Administrator.

■ In consideration of the foregoing, the FHWA amends title 23, Code of Federal Regulations, part 655, subpart F as follows:

PART 655—TRAFFIC OPERATIONS

■ 1. The authority citation for part 655 continues to read as follows:

Authority: 23 U.S.C. 101(a), 104, 109(d), 114(a), 217, 315, and 402(a); 23 CFR 1.32; and, 49 CFR 1.48(b).

§ 655.601 [Amended]

■ 2. Amend § 655.601 by removing paragraph (b) and by redesignating paragraphs (c) and (d) as paragraphs (b) and (c), respectively.

■ 3. Amend § 655.603 by revising paragraphs (a) and (b); amending paragraph (c), by redesignating footnote 2 as footnote 1; by revising paragraph (d)(1); and by removing paragraphs (d)(4) and (e) to read as follows:

§ 655.603 Standards.

(a) *National MUTCD.* The MUTCD approved by the Federal Highway Administrator is the national standard for all traffic control devices installed on any street, highway, or bicycle trail open to public travel in accordance with 23 U.S.C. 109(d) and 402(a). For the purpose of MUTCD applicability, open to public travel includes toll roads and roads within shopping centers, parking lot areas, airports, sports arenas, and other similar business and/or recreation facilities that are privately owned but where the public is allowed to travel without access restrictions. Military bases and other gated properties where access is restricted and private highway-rail grade crossings are not included in this definition.

(b) *State or other Federal MUTCD.* (1) Where State or other Federal agency MUTCDs or supplements are required, they shall be in substantial conformance with the National MUTCD. Substantial conformance means that the State MUTCD or supplement shall conform as a minimum to the standard statements included in the National MUTCD. The FHWA Division Administrators and Associate Administrator for the Federal Lands Highway Program may grant exceptions in cases where a State MUTCD or supplement cannot conform to standard statements in the National MUTCD because of the requirements of a specific State law that was in effect prior to the effective date of this final rule, provided that the Division Administrator or Associate Administrator determines based on information available and documentation received from the State that the non-conformance does not create a safety concern. The guidance statements contained in the National MUTCD shall also be in the State Manual or supplement unless the reason for not including it is satisfactorily explained based on engineering judgment, specific conflicting State law, or a documented engineering study. The FHWA Division Administrators shall approve the State MUTCDs and supplements that are in substantial conformance with the National MUTCD. The FHWA Associate Administrator of the Federal Lands Highway Program shall approve other Federal land management agencies MUTCDs and supplements that are in substantial conformance with the National MUTCD. The FHWA Division Administrators and the FHWA Associate Administrators for the Federal Lands Highway Program have the flexibility to determine on a case-by-case basis the degree of variation allowed.

(2) States and other Federal agencies are encouraged to adopt the National MUTCD in its entirety as their official Manual on Uniform Traffic Control Devices.

(3) States and other Federal agencies shall adopt changes issued by the FHWA to the National MUTCD within two years from the effective date of the final rule. For those States that automatically adopt the MUTCD immediately upon the effective date of the latest edition or revision of the MUTCD, the FHWA Division Administrators have the flexibility to allow these States to install certain devices from existing inventory or previously approved construction plans that comply with the previous MUTCD during the two-year adoption period.

* * * * *

(d) *Compliance*—(1) *Existing highways.* Each State, in cooperation with its political subdivisions, and Federal agency shall have a program as required by 23 U.S.C. 402(a), which shall include provisions for the systematic upgrading of substandard traffic control devices and for the installation of needed devices to achieve conformity with the MUTCD. The FHWA may establish target dates of achieving compliance with changes to specific devices in the MUTCD.

* * * * *

■ 4. Revise the first sentence of paragraph (a) and the first sentence of paragraph (b) of § 655.604 to read as follows:

§ 655.604 Achieving basic uniformity.

(a) *Programs.* Programs for the orderly and systematic upgrading of existing traffic control devices or the installation of needed traffic control devices on or off the Federal-aid system should be based on inventories made in accordance with the Highway Safety Program Guideline 21, ''Roadway Safety.'' * * *

(b) *Inventory.* An inventory of all traffic control devices is recommended in the Highway Safety Program Guideline 21, ''Roadway Safety.'' * * *

[FR Doc. E6–21228 Filed 12–13–06; 8:45 am]

BILLING CODE 4910–22–P

PENSION BENEFIT GUARANTY CORPORATION

29 CFR Parts 4050 and 4281

RIN 1212–AB08

Mortality Assumptions

AGENCY: Pension Benefit Guaranty Corporation.

ACTION: Direct final rule.

SUMMARY: This document makes changes to the mortality assumptions under parts 4050 (Missing Participants) and 4281 (Duties of Plan Sponsor Following Mass Withdrawal) of PBGC's regulations. In a final rule published in the **Federal Register** on December 2, 2005, PBGC amended part 4044 (Allocation of Assets in Single-employer Plans) of its regulations to update mortality tables used for certain valuations for single-employer plans. Because of the dependence of certain valuations under part 4050 on part 4044, amendments updating the mortality assumptions under part 4050 are needed. This rule also makes a minor conforming amendment to the mortality assumptions in part 4281.

DATES: Effective February 27, 2007, without further notice, unless PBGC receives significant adverse comment by January 16, 2007. For a discussion of applicability of this rule, see **SUPPLEMENTARY INFORMATION**.

ADDRESSES: Comments, identified by RIN number 1212–AB08, may be submitted by any of the following methods:

- Federal eRulemaking Portal: *http://www.regulations.gov*. Follow the Web site instructions for submitting comments.
- E-mail: *reg.comments@pbgc.gov.*
- Fax: 202–326–4224.
- Mail or Hand Delivery: Legislative and Regulatory Department, Pension Benefit Guaranty Corporation, 1200 K Street, NW., Washington, DC 20005–4026.

All submissions must include the Regulatory Information Number for this rulemaking (RIN number 1212–AB08). Comments received, including personal information provided, will be posted to *www.pbgc.gov*. Copies of comments may also be obtained by writing to Disclosure Division, Office of the General Counsel, Pension Benefit Guaranty Corp., 1200 K Street, NW., Washington, DC 20005–4026 or calling 202–326–4040 during normal business hours. (TTY and TDD users may call the Federal relay service toll-free at 1–800–877–8339 and ask to be connected to 202–326–4040.)

FOR FURTHER INFORMATION CONTACT: Catherine B. Klion, Manager, or James L. Beller, Jr., Attorney, Regulatory and Policy Division, Legislative and Regulatory Department, Pension Benefit Guaranty Corp., 1200 K Street, NW., Suite 1200, Washington, DC 20005–4026; 202–326–4024. (TTY/TDD users may call the Federal relay service toll-free at 1–800–877–8339 and ask to be connected to 202–326–4024.)

SUPPLEMENTARY INFORMATION: PBGC is publishing this rule without prior proposal because we view it as a non-controversial amendment and expect no significant adverse comment. The rule is expected to have minimal economic impact on plans and participants. Unless we receive significant adverse comment by January 16, 2007, this rule will be effective on February 27, 2007 without further notice.

For the reasons stated herein, PBGC for good cause finds that prior proposal and opportunity for public comment are unnecessary. However, in the ''Proposed Rules'' section of today's **Federal Register**, we are publishing a separate document that will serve as a notice of proposal to amend parts 4050 and 4281 as described in this direct final rule in case we receive significant adverse comment. If that happens, PBGC will publish, in a timely manner, a document in the Rules category of the **Federal Register** withdrawing the direct final rule. We will then address public comments in a subsequent final rule based on the proposed rule. We will not institute a second comment period on this rule. Any parties interested in commenting must do so at this time.

Part 4050—Missing Participants

Under part 4050 (Missing Participants), a plan terminating in a standard termination (or a sufficient distress termination) may pay a ''designated benefit'' to PBGC on behalf of a missing participant. For participants with non-*de minimis* benefits, the designated benefit is equal to or based on the participant's most valuable annuity benefit determined using the ''missing participant annuity assumptions'' as defined in § 4050.2.

The term ''missing participant annuity assumptions'' is defined with reference to valuation assumptions under part 4044 (Allocation of Assets in Single-Employer Plans), including part 4044 interest assumptions, but the use of a different mortality table is required (i.e., a unisex rather than a sex-distinct mortality table). For this purpose, the current regulation specifies the use of the mortality table prescribed by the Internal Revenue Service under Revenue Ruling 95–6 (the ''95–6 Mortality Table'').

On December 2, 2005, at 70 FR 72205, PBGC published a final rule modifying part 4044 of its regulations to update the mortality tables in Appendix A. PBGC uses these updated mortality tables to derive the interest factors it prescribes under part 4044. In deriving these interest factors, PBGC attempts to match market annuity prices. The new mortality tables result in interest factors that are higher than they would have been using the old tables.

Before the part 4044 mortality tables were updated, the 95–6 Mortality Table reasonably approximated a unisex blend of the part 4044 healthy-life mortality tables and, when combined with the part 4044 interest factors (as is required under part 4050), produced values that reasonably matched the market prices of annuities. However, the 95–6 Mortality Table no longer approximates a unisex blend of the part 4044 mortality tables and, when combined with the part 4044 interest factors, will tend to produce values that are lower than market annuity prices.

Therefore, PBGC is amending part 4050 to update the mortality rates used to value annuity benefits. The updated rates will be a fixed blend of 50 percent of the healthy male mortality rates under part 4044 and 50 percent of the healthy female mortality rates under part 4044.

This amendment is applicable to plans terminating on or after the effective date of this amendment.

In addition, PBGC is correcting the cross-reference in paragraph (4) of the definition of ''missing participant annuity assumptions.'' The current reference to § 4044.52(e) should be to § 4044.52(d).

Part 4281—Duties of Plan Sponsor Following Mass Withdrawal

PBGC is amending § 4281.14 by adding a new paragraph (f), which provides that, for valuing deferred annuities, the mortality of the contingent annuitant during the deferral period is disregarded. This is because a contingent annuitant who dies during the deferral period may be replaced with a different contingent annuitant. This amendment conforms to the assumptions used for single-employer plans. This amendment is applicable to valuations with valuation dates on or after the effective date of this rule.

On July 12, 2006, at 71 FR 39205, PBGC published a Technical Amendment to part 4281 making conforming changes to paragraphs (c), (d), and (e) of § 4281.14 that were inadvertently omitted from the final rule amending part 4044, published on December 2, 2005, at 70 FR 72205. PBGC is restating § 4281.14 in its entirety to incorporate those technical amendments into this rulemaking.

Compliance With Rulemaking Guidelines

PBGC has determined, in consultation with the Office of Management and Budget, that this rule is a not a ''significant regulatory action'' under Executive Order 12866, and, therefore, is not subject to OMB review.

PBGC certifies under section 605(b) of the Regulatory Flexibility Act that this rule will not have a significant economic impact on a substantial number of small entities. The economic impact on a particular plan of these amendments is expected to be minimal. The adjustment for each benefit valuation will generally be small. In addition, the change to part 4050 will affect only a small number of participants (i.e., missing participants). The change to 4281 also will affect only a small number of participants (i.e., deferred annuitants in multiemployer plans experiencing mass withdrawal). Therefore, this rule is not expected to have a significant economic impact on a substantial number of entities of any size. Accordingly, sections 603 and 604 of the Regulatory Flexibility Act do not apply.

List of Subjects for 29 CFR Parts 4050 and 4281

Employee benefit plans, Pension insurance, Reporting and recordkeeping requirements.

■ For the reasons set forth above, PBGC amends parts 4050 and 4281 of 29 CFR chapter XL as follows:

PART 4050—MISSING PARTICIPANTS

■ 1. The authority citation for part 4050 continues to read as follows:

Authority: 29 U.S.C. 1302(b)(3), 1350.

■ 2. Amend § 4050.2, by revising paragraphs (2) and (4) of the definition of *Missing participant annuity assumptions* to read as follows:

§ 4050.2 Definitions.

* * * * *

Missing participant annuity assumptions means the interest rate assumptions and actuarial methods for valuing benefits under § 4044.52 of this chapter, applied—

(1) * * *

(2) Using mortality rates that are a fixed blend of 50 percent of the healthy male mortality rates in § 4044.53(c)(1) of this chapter and 50 percent of the healthy female mortality rates in § 4044.53(c)(2) of this chapter;

(3) * * *

(4) Without making the adjustment for expenses provided for in § 4044.52(d) of this chapter; and

* * * * *

PART 4281—DUTIES OF PLAN SPONSOR FOLLOWING MASS WITHDRAWAL

■ 3. The authority citation for part 4281 continues to read as follows:

Authority: 29 U.S.C. 1302(b)(3), 1341a, 1399(c)(1)(D), and 1441.

■ 4. Revise § 4281.14 to read as follows:

§ 4281.14 Mortality assumptions.

(a) *General rule.* Subject to paragraph (b) of this section (regarding certain death benefits), the plan administrator shall use the mortality factors prescribed in paragraphs (c), (d), (e), and (f) of this section to value benefits under § 4281.13.

(b) *Certain death benefits.* If an annuity for one person is in pay status on the valuation date, and if the payment of a death benefit after the valuation date to another person, who need not be identifiable on the valuation date, depends in whole or in part on the death of the pay status annuitant, then the plan administrator shall value the death benefit using—

(1) The mortality rates that are applicable to the annuity in pay status under this section to represent the mortality of the pay status annuitant; and

(2) The mortality rates applicable to annuities not in pay status and to deferred benefits other than annuities, under paragraph (c) of this section, to represent the mortality of the death beneficiary.

(c) *Mortality rates for healthy lives.* The mortality rates applicable to annuities in pay status on the valuation date that are not being received as disability benefits, to annuities not in pay status on the valuation date, and to deferred benefits other than annuities, are,—

(1) For male participants, the rates in Table 1 of Appendix A to part 4044 of this chapter projected from 1994 to the calendar year in which the valuation date occurs plus 10 years using Scale AA from Table 2 of Appendix A to part 4044 of this chapter; and

(2) For female participants, the rates in Table 3 of Appendix A to part 4044 of this chapter projected from 1994 to the calendar year in which the valuation date occurs plus 10 years using Scale AA from Table 4 of Appendix A to part 4044 of this chapter.

(d) *Mortality rates for disabled lives (other than Social Security disability).* The mortality rates applicable to annuities in pay status on the valuation date that are being received as disability benefits and for which neither eligibility for, nor receipt of, Social Security disability benefits is a prerequisite, are,—

(1) For male participants, the lesser of—

(i) The rate determined from Table 1 of Appendix A to part 4044 of this chapter projected from 1994 to the calendar year in which the valuation date occurs plus 10 years using Scale AA from Table 2 of Appendix A to part 4044 of this chapter and setting the resulting table forward three years, or

(ii) The rate in Table 5 of Appendix A to part 4044 of this chapter.

(2) For female participants, the lesser of—

(i) The rate determined from Table 3 of Appendix A to part 4044 of this chapter projected from 1994 to the calendar year in which the valuation date occurs plus 10 years using Scale AA from Table 4 of Appendix A to part 4044 of this chapter and setting the resulting table forward three years, or

(ii) The rate in Table 6 of Appendix A to part 4044 of this chapter.

(e) *Mortality rates for disabled lives (Social Security disability).* The mortality rates applicable to annuities in pay status on the valuation date that are being received as disability benefits and for which either eligibility for, or receipt of, Social Security disability benefits is a prerequisite, are—

(1) For male participants, the rates in Table 5 of Appendix A to part 4044 of this chapter; and

(2) For female participants, the rates in Table 6 of Appendix A to part 4044 of this chapter.

(f) *Contingent annuitant mortality during deferral period.* If a participant's joint and survivor benefit is valued as a deferred annuity, the mortality of the contingent annuitant during the deferral period will be disregarded.

Issued in Washington, DC, this 8th day of December, 2006.

Elaine L. Chao,

Chairman, Board of Directors, Pension Benefit Guaranty Corporation.

Issued on the date set forth above pursuant to a resolution of the Board of Directors authorizing its Chairman to issue this final rule.

Judith R. Starr,

Secretary, Board of Directors, Pension Benefit Guaranty Corporation.

[FR Doc. E6–21280 Filed 12–13–06; 8:45 am]

BILLING CODE 7709–01–P

ENVIRONMENTAL PROTECTION AGENCY

40 CFR Parts 60 and 62

[OAR; FRL–8255–9]

Notice of Finding That Certain States Did Not Submit Clean Air Mercury Rule (CAMR) State Plans for New and Existing Electric Utility Steam Generating Units and Status of Submission of Such Plans

AGENCY: Environmental Protection Agency (EPA).

ACTION: Final rule.

SUMMARY: In this action, EPA is making a finding on the status of submission of State Plans in response to the Clean Air Mercury Rule (CAMR). CAMR requires States to develop plans for implementing a phased cap on mercury emissions from new and existing large, coal-fired electric generating units leading to nationwide reductions in mercury emissions from such units and establishes November 17, 2006 as the deadline for submitting those plans. At present, some States have submitted plans, others are still in the process of developing plans, and some are choosing not to submit plans but instead to allow a Federal Plan addressing such emissions to go into effect in that State.

In this action, EPA is making specific findings that certain States did not submit CAMR State Plans by the November 17, 2006 deadline and is otherwise providing notice of the status of State Plan submissions. In conjunction with this rule, EPA is also providing letters to each State regarding this action.

DATES: *Effective Date:* The effective date of this rule is December 14, 2006.

FOR FURTHER INFORMATION CONTACT: Mr. Murat Kavlak, U.S. Environmental Protection Agency, (202) 343–9634.

SUPPLEMENTARY INFORMATION: For questions related to a specific State, please contact the appropriate regional office:

Regional offices	States and tribes
Dave Conroy, Acting Branch Chief, Air Programs Branch, EPA New England, I Congress Street, Suite 1100, Boston, MA 02114–2023, (617) 918–1661.	Connecticut, Maine, Massachusetts, New Hampshire, Rhode Island, and Vermont.
Raymond Werner, Chief, Air Programs Branch, EPA Region 2, 290 Broadway, 25th Floor, New York, NY 10007–1866, (212) 637–4249.	New Jersey, New York, Puerto Rico, and Virgin Islands.
Dave Campbell, Chief, Permits and Technical Assessment Branch, EPA Region 3, 1650 Arch Street, Philadelphia, PA 19103–2187, (215) 814–2196.	Delaware, District of Columbia, Maryland, Pennsylvania, Virginia, and West Virginia.
Dr. Kenneth Mitchell, Chief, Air Toxics Assessment and Implementation Section, EPA Region 4, Sam Nun Atlanta Federal Center, 61 Forsyth Street, SW, 12th Floor, Atlanta, GA 30303–8960, (404) 562–9065.	Alabama, Florida, Georgia, Kentucky, Mississippi, North Carolina, South Carolina, and Tennessee.
Carl Nash, Chief, Integrated Air Toxics Section, EPA Region 5, 77 West Jackson Street, Chicago, IL 60604, (312) 886–6030.	Illinois, Indiana, Michigan, Minnesota, Ohio, and Wisconsin.
Rebecca Weber, Branch Chief, EPA Region 6, 1445 Ross Avenue, Dallas, TX 75202, (214) 665–6656.	Arkansas, Louisiana, New Mexico, Oklahoma, and Texas.
Michael Jay, Air Programs Branch, EPA Region 7, 901 North 5th Street, Kansas City, Kansas 66101–2907, (913) 551–7460.	Iowa, Kansas, Missouri, and Nebraska.
Richard R. Long, Director, Air and Radiation Program, EPA Region 8, 999 18th Street, Suite 300, Denver, CO 80202, (303) 312–6005.	Colorado, Montana, North Dakota, South Dakota, Utah, and Wyoming.
Andrew Steckel, Chief, Rules Office, EPA Region 9, 75 Hawthorne Street, San Francisco, CA 94105, (415) 947–4115.	Arizona, California, Guam, Hawaii, and Nevada.
Mahbubul Islam, Manager, State and Tribal Air Programs, EPA Region 10, Office of Air, Waste, and Toxics, Mail Code OAQ–107, 1200 Sixth Avenue, Seattle, WA 98101, (206) 553–6985.	Alaska, Idaho, Oregon, and Washington.

Table of Contents:

I. Background
II. This Action
III. Statutory and Executive Order Reviews
A. Notice and Comment Under the Administrative Procedures Act
B. Executive Order 12866: Regulatory Planning and Review
C. Paperwork Reduction Act
D. Regulatory Flexibility Act
E. Unfunded Mandates Reform Act
F. Executive Order 13132: Federalism
G. Executive Order 13175: Consultation and Coordination With Indian Tribal Governments
H. Executive Order 13045: Protection of Children From Environmental Health and Safety Risks
I. Executive Order 13211: Actions That Significantly Affect Energy Supply, Distribution, or Use
J. National Technology Transfer Advancement Act
K. Congressional Review Act
L. Judicial Review

I. Background

On March 15, 2005, EPA finalized CAMR and established standards of performance for reducing mercury emissions from new and existing coal-fired electric generating units (EGUs) (70 FR 28606, May 18, 2005). CAMR was revised on June 9, 2006 (71 FR 33388, June 9, 2006). CAMR affects 53 jurisdictions, including the 50 States, the District of Columbia, and 2 Tribes, and requires State Plan submissions by these jurisdictions, except for the 2 Tribes. (The States and the District of Columbia are generally referred to in this notice as ''States''.) CAMR requires each State to submit a State Plan containing provisions that ensure that the State's applicable annual EGU mercury emissions budget is not exceeded. In choosing a mechanism for meeting the applicable State budget, States are free to choose the mechanism that best suits the particular State's needs, so long as that mechanism ensures that the State budget is not exceeded. CAMR also established a nationwide, EPA-administered cap-and-trade program that affected jurisdictions may choose to adopt in order to achieve the required reductions.

The mercury reductions are required under CAMR in two phases. The first phase will cap nationwide annual EGU mercury emissions at 38 tons beginning in 2010. The first phase cap reflects ''co-benefit'' reductions, i.e., mercury reductions that will result from reductions of sulfur dioxide (SO_2) and nitrogen oxides (NO_X) emissions under the Clean Air Interstate Rule (CAIR), issued on May 12, 2005 and revised on April 28, 2006. Because of incentives for early emission reductions under CAMR, mercury emissions are projected to be below the cap level in 2010. The second phase commences in 2018 and will limit nationwide annual EGU mercury emissions to 15 tons upon full implementation. Under CAMR, coal-fired EGUs that commence construction starting on or after January 30, 2004 will have to meet new source performance standards, in addition to being subject to the CAMR emission caps.

CAMR requires States to submit State Plans to EPA by November 17, 2006 (40 CFR 60.24(h)(2)). The rule provides each State with flexibility to achieve the required mercury emission reductions in a manner chosen by the State and provides a model mercury trading rule that a State may choose to adopt to achieve the reductions. Section 60.24(h)(1) in CAMR lists the States required to submit CAMR State Plans (70 FR 28649–50).

Status of Submission of State Plans

EPA acknowledges and appreciates the extensive effort that States have undertaken to develop CAMR State Plans as quickly as possible. In particular, EPA acknowledges that certain States (listed below) have submitted State Plans in response to CAMR by the November 17, 2006, deadline. (EPA intends to treat State Plans as being timely submitted as long as the plan is postmarked November 17, 2006 or earlier, regardless of when it is actually received. As a result, it is possible that one or more of the States not listed below did in fact submit a State Plan by November 17, 2006 that

EPA has not yet received. If this is the case, EPA will notify each State in question of that fact and will withdraw today's finding that the State did not submit the required State Plan by November 17, 2006.) EPA is now reviewing these plans. EPA also recognizes that additional States that did not submit CAMR State Plans by November 17, 2006 are, nevertheless, making substantial efforts to complete and submit State Plans. EPA encourages continuation of these efforts and will continue to assist States as they develop their plans. EPA looks forward to receiving these State Plans in the relatively near future, will give full consideration to all State Plans, and will approve those plans that meet the criteria specified in CAMR and subpart B of 40 CFR part 60, regardless of when the plan is submitted.

EPA also believes that some States may choose Federal implementation of CAMR and, therefore, do not intend to submit a State Plan. This may be advantageous for States with limited resources. EPA believes that it is appropriate for States to determine whether it is more effective to develop their own plans or to decide to allow Federal implementation of the required mercury emission reductions. EPA fully supports either approach. There are no sanctions that apply to States that choose Federal implementation of CAMR. EPA will continue to work with States that have not yet submitted State Plans to meet the requirements in CAMR and wish to submit such a plan.

Under 40 CFR 60.27(b), the Administrator must approve or disapprove State Plans within 4 months of the November 17, 2006 submission deadline. Moreover, under 40 CFR 60.27(c), the Administrator must propose a Federal Plan for States that did not submit State Plans by the submission deadline or whose State Plans the Administrator disapproves. Within 6 months of the submission deadline, the Administrator must finalize a Federal Plan for such States under 40 CFR 60.27(d), unless in the meantime the State submits a State Plan that the Administrator determines to be approvable. Consistent with the regulation, EPA is proposing a Federal Plan in a separate action and intends to then proceed with promulgating a final Federal Plan. The final Federal Plan will only apply in those States that have not submitted a State Plan, whose State Plan submitted by November 17, 2006 has been disapproved by EPA as of the date of promulgation of the final Federal Plan, or whose State Plan submitted after November 17, 2006 has not been approved as of the date of promulgation of the final Federal Plan. The final Federal Plan will not apply in States that have submitted a State Plan by November 17, 2006 on which EPA has not taken final action. EPA intends to review any submitted State Plans as expeditiously as practicable. Even if EPA finalizes a Federal Plan for a State, it is EPA's intention to work quickly to review any State Plan or revision of a State Plan submitted by the State so that an approvable State Plan can take the place of the Federal Plan as quickly as possible.

EPA's administrative efforts for CAMR will be similar to those occurring for CAIR in that the Agency wants to work with States to implement the program using mechanisms chosen by the States (for States choosing to implement the programs), while also guaranteeing the public that in a timely manner all coal-fired EGUs will be covered by the CAMR requirements, including emissions monitoring that begins in 2009 and the annual emissions cap that starts in 2010. EPA intends to propose a CAMR Federal Plan with provisions that provide administrative flexibility to States, similar to the flexibility provided in the CAIR Federal Implementation Plan (FIP) (*see* 71 FR 25328, April 28, 2006).

II. This Action

By this action, EPA is, in accordance with sections 110(c) and 111(d)(2) of the CAA and 40 CFR 60.27(c)(1), making a finding that certain States did not submit a CAMR State Plan by November 17, 2006, as required by CAMR. CAMR covers the States listed in 40 CFR 60.24(h)(1). The following States submitted CAMR State Plans as of the November 17, 2006, deadline: Alabama, Arizona, Connecticut, Delaware, Idaho, Illinois, Iowa, Louisiana, Massachusetts, Montana, Nevada, New Hampshire, New Jersey, New York, North Dakota, Pennsylvania, Rhode Island, South Dakota, Texas, Vermont, and West Virginia. No other States subject to CAMR submitted CAMR State Plans by the November 17, 2006 deadline. As to those States that did not submit CAMR State Plans, EPA finds, in accordance with CAA sections 110(c) and 111(d)(2) and 40 CFR 60.27(c)(1), that each such State did not submit a State Plan by the November 17, 2006 deadline. Recognizing that many States that did not submit CAMR State Plans by November 17, 2006 are making substantial efforts to complete and submit their State Plans, EPA encourages continuation of these efforts and looks forward to receiving and reviewing those State Plans. As discussed above, EPA is proposing a Federal Plan in a separate action.

III. Statutory and Executive Order Reviews

A. Notice and Comment Under the Administrative Procedures Act

This is a final EPA action, but is not subject to notice-and-comment requirements of the Administrative Procedures Act (APA), 5 U.S.C. 553(b). The EPA invokes, consistent with past practice, the good cause exception pursuant to APA, 5 U.S.C. 553(b)(3)(B). Notice and comment are unnecessary because no significant EPA judgment is involved in finding that certain States did not submit a State Plan by the November 17, 2006 deadline specified in CAMR and providing notice of the status of submission of State Plans. In addition, EPA believes that providing notice and an opportunity to comment would be contrary to the public interest in that the finding is a necessary predicate to EPA proposing a Federal Plan that will ultimately ensure that emission reductions are achieved in areas not covered by an approved State Plan and EPA needs to proceed promptly with proposing a Federal Plan to ensure that the Federal Plan can be finalized in a timely manner.

B. Executive Order 12866: Regulatory Planning and Review

This action is not a ''significant regulatory action'' under the terms of Executive Order (EO) 12866 (58 FR 51735, October 4, 1993) and is therefore not subject to review under the EO.

This final rule simply identifies those States that did not submit a CAMR State Plan and provides notice of the status of State Plan submissions in response to CAMR, therefore, EPA did not prepare an analysis of the potential costs and benefits associated with this action.

C. Paperwork Reduction Act

This action does not impose an information collection burden under the provisions of the Paperwork Reduction Act, 44 U.S.C. 3501, *et seq.* This rule relates to the requirement in CAMR for States to submit State Plans. The present final rule simply identifies those States that did not submit a CAMR State Plan by the November 17, 2006 deadline specified in CAMR and, otherwise, provides notice of the status of State Plan submissions and does not establish any new information collection requirement. Burden means the total time, effort, or financial resources expended by persons to generate, maintain, retain, or disclose or provide information to or for a Federal agency.

This includes the time needed to review instructions; develop, acquire, install, and utilize technology and systems for the purposes of collecting, validating, and verifying information, processing and maintaining information, and disclosing and providing information; adjust the existing ways to comply with any previously applicable instructions and requirements; train personnel to be able to respond to a collection of information; search data sources; complete and review the collection of information; and transmit or otherwise disclose the information. An Agency may not conduct or sponsor, and a person is not required to respond to a collection of information unless it displays a currently valid OMB control number. The OMB control numbers for EPA's regulations in the Code of Federal Regulations (CFR) are listed in 40 CFR part 9.

D. Regulatory Flexibility Act

The Regulatory Flexibility Act (RFA) generally requires an agency to prepare a regulatory flexibility analysis of any rule subject to notice and comment rulemaking requirements under the Administrative Procedures Act (APA) or any other statute unless the EPA certifies that the rule will not have a significant economic impact on a substantial number of small entities. Small entities include small businesses, small organizations, and small governmental jurisdictions.

For the purpose of assessing the impacts of today's final rule on small entities, small entity is defined as: (1) A small business that is a small industry entity as defined in the U.S. Small Business Administration (SBA) size standards (*see* 13 CFR 121.201); (2) a small governmental jurisdiction that is a government of a city, county, town, school district or special district with a population of less than 50,000; and (3) a small organization that is any not-for-profit enterprise which independently owned and operated is not dominate in its field.

Courts have interpreted the RFA to require a regulatory flexibility analysis only when small entities will be subject to the requirements of the rule. *See Michigan* v. *EPA*, 213 F.3d 663, 668–69 (D.C. Cir., 2000), *cert. den.*, 532 U.S. 903 (2001). The present final rule simply identifies those States that did not submit a CAMR State Plan by the November 17, 2006 deadline specified in CAMR and, otherwise, provides notice of the status of State Plan submissions and does not establish requirements applicable to small entities. After considering the economic impacts of today's final rule on small entities, I certify that this rule will not have a significant economic impact on a substantial number of small entities.

E. Unfunded Mandates Reform Act

Title II of the Unfunded Mandates Reform Act of 1995 (UMRA), Pub. L. 104–4, establishes requirements for Federal agencies to assess the effects of their regulatory actions on State, local, or Tribal governments and the private sector. Under section 202 of the UMRA, EPA generally must prepare a written statement, including a cost-benefit analysis, for proposed and final rules with ''Federal mandates'' that may result in expenditures to State, local, or Tribal governments, in the aggregate, or to the private sector, of $100 million or more in any one year. Before promulgating an EPA rule for which a written statement is needed, section 205 of the UMRA generally requires EPA to identify and consider a reasonable number of regulatory alternatives and adopt the least costly, most cost-effective, or least burdensome alternative that achieves the objectives of the rule. The provisions of section 205 do not apply when they are inconsistent with applicable law. Moreover, section 205 allows EPA to adopt an alternative other than the least costly, most cost-effective, or least burdensome alternative if the Administrator publishes with the final rule an explanation of why that alternative was not adopted. Before EPA establishes any regulatory requirements that may significantly or uniquely affect small governments, including Tribal governments, it must have developed under section 203 of the UMRA a small government agency plan. The plan must provide for notifying potentially affected small governments, enabling officials of affected small governments to have meaningful and timely input in the development of EPA regulatory proposals with significant Federal intergovernmental mandates, and informing, educating, and advising small governments on compliance with the regulatory requirements.

This action does not include a Federal mandate within the meaning of UMRA that may result in expenditures of $100 million or more in any 1 year by either State, local, or Tribal governments in the aggregate or to the private sector and, therefore, is not subject to the requirements of sections 202 and 205 of the UMRA. It does not create any additional requirements beyond those of CAMR. Therefore, no UMRA analysis is needed. The present final rule simply identifies those States that did not submit a CAMR State Plan by the November 17, 2006 deadline specified in CAMR and, otherwise, provides notice of the status of State Plan submissions in response to CAMR.

Inasmuch as this action simply provides notice of the status of State submissions in response to pre-existing requirements under CAMR, EPA has determined that this action contains no regulatory requirements that might significantly or uniquely affect small governments.

F. Executive Order 13132: Federalism

Executive Order 13132, entitled ''Federalism'' (64 FR 43255, August 10, 1999), requires EPA to develop an accountable process to ensure ''meaningful and timely input by State and local officials in the development of regulatory policies that have federalism implications.'' ''Policies that have federalism implications'' is defined in the Executive Order to include regulations that have ''substantial direct effects on the States, or the relationship between the national government and the States, or on the distribution of power and responsibilities among the various levels of government.''

This final rule does not have federalism implications. It will not have substantial direct effects on the States, on the relationship between the national government and the States, or on the distribution of power and responsibilities among the various levels of government, as specified in Executive Order 13132. The Clean Air Act (CAA) establishes the scheme whereby States take the lead in developing plans to meet the standards of performance for new and existing sources. This rule will not modify the relationship of the States and EPA for purposes of developing programs to implement the standards. In addition, this rule does not impose any new obligations on the States. Thus, Executive Order 13132 does not apply to this rule.

G. Executive Order 13175: Consultation and Coordination With Indian Tribal Governments

Executive Order 13175, entitled ''Consultation and Coordination with Indian Tribal Governments'' (65 FR 67249, November 9, 2000), requires EPA to develop an accountable process to ensure ''meaningful and timely input by Tribal officials in the development of regulatory policies that have Tribal implications.'' This final rule does not have ''Tribal implications'' as specified in Executive Order 13175. The present final rule simply identifies those States that did not submit a CAMR State Plan by the November 17, 2006 deadline specified in CAMR and, otherwise,

provides notice of the status of State Plan submissions in response to CAMR. The Tribal Authority Rule (TAR) gives Tribes the opportunity to develop and implement CAA programs, but it leaves to the discretion of the Tribe whether to develop these programs and which programs, or appropriate elements of a program, the Tribe will adopt. Moreover, the present final rule does not have a substantial direct effect on one or more Indian Tribes, because no Tribe has implemented an air quality management program related to the standards of performance for new and existing EGUs under CAMR at this time.

Furthermore, this rule does not affect the relationship or distribution of power and responsibilities between the Federal government and Indian Tribes. The CAA and the TAR establish the relationship of the Federal government and Tribes in developing plans to implement the standards of performance for new and existing EGUs, and this rule does nothing to modify that relationship. Because this rule does not have Tribal implications, Executive Order 13175 does not apply.

H. Executive Order 13045: Protection of Children From Environmental Health and Safety Risks

Executive Order 13045: ''Protection of Children from Environmental Health and Safety Risks'' (62 FR 19885, April 23, 1997) applies to any rule that (1) is determined to be ''economically significant'' as defined under Executive Order 12866, and (2) concerns an environmental health and safety risk that EPA has reason to believe may have a disproportionate effect on children. If the regulatory action meets both criteria, EPA must evaluate the environmental health or safety effects of the planned rule on children and explain why the planned regulation is preferable to other potentially effective and reasonably feasible alternatives considered by EPA. This action is not subject to Executive Order 13045 because it is not economically significant as defined in Executive Order 12866 and because EPA does not have reason to believe that the environmental health risks or safety risks addressed by this action present a disproportionate risk or safety risk to children.

I. Executive Order 13211: Actions That Significantly Affect Energy Supply, Distribution, or Use

This action is not subject to Executive Order 13211, ''Actions that Significantly Affect Energy Supply, Distribution, or Use'' (66 FR 28355, May 22, 2001), because it is not a significant regulatory action under Executive Order 12866. The present final rule simply identifies those States that did not submit a CAMR State Plan by the November 17, 2006 deadline specified in CAMR and, otherwise, provides notice of the status of State Plan submissions in response to CAMR.

J. National Technology Transfer Advancement Act

Section 12(d) of the National Technology Transfer Advancement Act of 1995 (NTTAA), Public Law No. 104–113, section 12(d) (15 U.S.C. 272 note), directs EPA to use voluntary consensus standards (VCS) in its regulatory activities unless to do so would be inconsistent with applicable law or otherwise impracticable. Voluntary consensus standards are technical standards (e.g., materials specifications, test methods, sampling procedures, and business practices) that are developed or adopted by VCS bodies. The NTTAA directs EPA to provide Congress, through OMB, explanations when EPA decides not to use available and applicable VCS.

This action does not involve technical standards. Therefore, EPA did not consider the use of any VCS.

K. Congressional Review Act

The Congressional Review Act, 5 U.S.C. 801, *et seq.*, as added by the Small Business Regulatory Enforcement Fairness Act of 1996, generally provides that before a rule may take effect, the Agency promulgating the rule must submit a rule report, which includes a copy of the rule, to each House of the Congress and to the Comptroller General of the United States. This action is not a ''major rule'' as defined by the 5 U.S.C. 804(2). This rule will be effective upon promulgation. EPA will submit a report containing this rule and other required information to the U.S. Senate, the U.S. House of Representatives, and the Comptroller General of the United States prior to publication of the rule in the **Federal Register**.

L. Judicial Review

Section 307 (b)(1) of the CAA indicates which Federal Courts of Appeal have jurisdiction and are the appropriate venue for filing petitions of review of final actions by EPA. This section provides, in part, that petitions for review must be filed in the Court of Appeals for the District of Columbia Circuit: (i) When the EPA action consists of ''nationally applicable regulations promulgated, or final actions taken, by the Administrator;'' or (ii) when such action is locally or regionally applicable, if ''such action is based on a determination of nationwide scope or effect and if in taking such action the Administrator finds and publishes that such action is based on such a determination.''

This action identifying those States that did not submit a CAMR State Plan by the November 17, 2006 deadline specified in CAMR and, otherwise, providing notice of the status of State Plan submissions in response to CAMR is ''nationally applicable'' within the meaning of section 307(b)(1). For the same reasons, the Administrator also is determining that notice of the status of submission of CAMR State Plans is based on a determination of nationwide scope and effect for the purposes of section 307(b)(1). This is particularly appropriate because in the report on the 1977 Amendments that revised section 307(b)(1) of the CAA, Congress noted that the Administrator's determination that an action is of ''nationwide scope or effect'' would be appropriate for any action that has ''scope or effect beyond a single judicial circuit.'' H.R. Rep. No. 95–294 at 323, 324, reprinted in 1977 U.S.C.C.A.N. 1402–03. Here, the scope and effect of this rulemaking extends to numerous judicial circuits since the findings and notice of the status of submission of CAMR State Plans apply to all areas of the country. In these circumstances, section 307(b)(1) and its legislative history call for the Administrator to find the rule to be of ''nationwide scope or effect'' and for venue to be in the D.C. Circuit. Thus, any petitions for review of this action related to the present final rule must be filed in the Court of Appeals for the District of Columbia Circuit within 60 days from the date final action is published in the **Federal Register**.

List of Subjects in 40 CFR Parts 60 and 62

Environmental protection, Administrative practice and procedure, Air pollution control, Intergovernmental relations.

Dated: December 7, 2006.

Stephen L. Johnson,

Administrator.

[FR Doc. E6–21283 Filed 12–13–06; 8:45 am]

BILLING CODE 6560–50–P

FEDERAL COMMUNICATIONS COMMISSION

47 CFR Part 64

[CG Docket Nos. 02–278 and 05–338]

Rules and Regulations Implementing the Telephone Consumer Protection Act of 1991; Junk Fax Prevention Act of 2005

AGENCY: Federal Communications Commission.

ACTION: Final rule.

SUMMARY: This document contains revisions to the final regulations of the Telephone Consumer Protection Act of 1991 (TCPA). The regulations relate to unwanted telephone solicitations pursuant to the TCPA.

DATES: Effective December 14, 2006.

FOR FURTHER INFORMATION CONTACT: Erica McMahon or Lynne Montgomery, Consumer & Governmental Affairs Bureau, (202) 418–2512.

SUPPLEMENTARY INFORMATION: The Commission published a document in the **Federal Register** on July 25, 2003, 68 FR 44144, which revised the TCPA rules and adopted new regulations to provide consumers with options for avoiding unwanted telephone solicitations. The Commission revises the final regulations to reflect recent updates to other provisions of part 64 relative to the TCPA.

List of Subjects in 47 CFR Part 64

Communications common carriers, Telecommunications, Telephone.

Federal Communications Commission.

Marlene H. Dortch,

Secretary.

■ For the reasons discussed in the preamble, the Federal Communications Commission amends 47 CFR part 64 as follows:

PART 64—MISCELLANEOUS RULES RELATING TO COMMON CARRIERS

■ 1. The authority citation for part 64 continues to read as follows:

Authority: 47 U.S.C. 154, 254(k) secs. 403(b)(2)(B), (c), Pub. L. 104–104, 110 Stat. 56. Interpret or apply 47 U.S.C. 201, 218, 222, 225, 226, 228, and 254(k) unless otherwise noted.

■ 2. Amend § 64.1200 by revising paragraph (c) introductory text to read as follows:

§ 64.1200 Delivery restrictions.

* * * * *

(c) No person or entity shall initiate any telephone solicitation, as defined in paragraph (f)(12) of this section, to:

* * * * *

■ 3. Amend § 64.1601 by revising paragraph (e) to read as follows:

§ 64.1601 Delivery requirements and privacy restrictions.

* * * * *

(e) Any person or entity that engages in telemarketing, as defined in section 64.1200(f)(10) must transmit caller identification information.

* * * * *

[FR Doc. E6–21308 Filed 12–13–06; 8:45 am]

BILLING CODE 6712–01–P

DEPARTMENT OF COMMERCE

National Oceanic and Atmospheric Administration

50 CFR Part 635

[Docket No. 060925247–6323–02; I.D. 091106B]

RIN 0648–AU84

Atlantic Highly Migratory Species; Atlantic Commercial Shark Management Measures

AGENCY: National Marine Fisheries Service (NMFS), National Oceanic and Atmospheric Administration (NOAA), Commerce.

ACTION: Final rule and temporary rule for emergency action; request for comments on temporary rule for emergency action.

SUMMARY: This combined final and temporary rule for emergency action establishes the 2007 first trimester season quotas for large coastal sharks (LCS), small coastal sharks (SCS), and pelagic sharks and publishes the opening and closing dates for the LCS fishery based on adjustments to the trimester quotas. The final rule also opens the existing mid-Atlantic shark closed area in July 2007, pending available quota. This combined rule is needed to address over- and underharvests that occurred in the Atlantic shark fishery in the first trimester of 2006.

DATES: *Final Rule:* The pelagic shark quotas, North Atlantic regional LCS and SCS quotas, North Atlantic regional LCS season, South Atlantic regional LCS quota and season opening and closing dates are provided in Table 2 under **SUPPLEMENTARY INFORMATION**.

The revision to the mid-Atlantic shark closed area under § 635.21(d)(1) is effective January 1, 2007.

Temporary Rule for Emergency Action: The Gulf of Mexico regional LCS and SCS quotas, Gulf of Mexico regional LCS season, and South Atlantic regional SCS quota are being taken via a temporary rule for emergency action and are effective on January 1, 2007, until June 12, 2007.

The Atlantic commercial shark quotas and fishing season opening and closing dates for the temporary rule for emergency action as set forth in this document are provided in Table 2 under **SUPPLEMENTARY INFORMATION**.

Comments on the temporary rule for emergency action must be received no later than February 12, 2007.

ADDRESSES: For copies of the Final Environmental Assessment/Regulatory Impact Review/Final Regulatory Flexibility Analysis (EA/RIR/FRFA), please contact Michael Clark at 1315 East-West Highway, Silver Spring, MD 20910, or at (301) 713–1917 (fax). Copies are also available from the HMS website at *http://www.nmfs.noaa.gov/sfa/hms/*. Written comments on the temporary rule for emergency action portions of this action may be submitted to Michael Clark, Highly Migratory Species Management Division via:

- E-mail: *SF1.091106B@noaa.gov*. Include in the subject line the following identifier: I.D. 091106B.
- Mail: 1315 East-West Highway, Silver Spring, MD 20910. Please mark on the outside of the envelope ''Comments on the Emergency Rule for 2007 1st Trimester Season Lengths and Quotas.''
- Fax: 301–713–1917.
- Federal e-Rulemaking portal: *http://www.regulations.gov*.

FOR FURTHER INFORMATION CONTACT: Michael Clark or Karyl Brewster-Geisz by phone: 301–713–2347 or by fax: 301–713–1917.

SUPPLEMENTARY INFORMATION:

Background

The Atlantic shark fishery is managed under the authority of the Magnuson-Stevens Fishery Conservation and Management Act (Magnuson-Stevens Act). NMFS recently finalized a Consolidated Highly Migratory Species Fishery Management Plan (HMS FMP) that consolidated and replaced previous FMPs for Atlantic Billfish and Atlantic Tunas, Swordfish, and Sharks. The HMS FMP is implemented by regulations at 50 CFR part 635.

Currently, the Atlantic shark annual quotas, with the exception of pelagic sharks, are split among three regions based on historic landings. Consistent with 50 CFR 635.27(b)(1)(iii) and (iv), the annual LCS quota (1,017 mt dw) is split among the three regions as follows: 52 percent to the Gulf of Mexico, 41 percent to the South Atlantic, and 7 percent to the North Atlantic. The

annual SCS quota (454 mt dw) is split among the three regions as follows: 10 percent to the Gulf of Mexico, 87 percent to the South Atlantic, and 3 percent to the North Atlantic. The regional quotas for LCS and SCS are divided equally between the trimester seasons in the South Atlantic and the Gulf of Mexico, and according to historical landings of 4, 88, and 8 percent for LCS, and 1, 9, and 90 percent for SCS in the first, second, and third trimester seasons, respectively, in the North Atlantic. Consistent with 50 CFR 635.27(b)(1)(iii) and (vi), any over- or underharvest in a given region from the 2006 first trimester season will be carried over to the 2007 first trimester season in that region.

On October 5, 2006 (71 FR 58778), NMFS published a draft EA and proposed rule that examined the regional quotas and proposed season lengths for the 2007 first trimester season for LCS managed under the HMS FMP. This rule was based on dealer reports received by August 24, 2006, indicating that approximately 230 percent (326.1 mt dw) of the LCS for the South Atlantic region had been reported harvested during the first trimester of 2006. At that time, the Gulf of Mexico and North Atlantic regions had reported approximately 46 and 6 percent of their LCS quotas, respectively, as being harvested.

On October 20, 2006, NMFS was informed that due to late Federal shark dealer reports, significant landings of LCS and SCS from the Gulf of Mexico region during the first trimester in 2006 may not have been included in previous published landings estimates and the proposed rule. On November 1, 2006, NMFS published a second **Federal Register** notice (71 FR 64213) extending the comment period on the proposed rule to November 13, 2006. On November 13, 2006, NMFS published a revised shark landings update and extended the comment period for the proposed rule to November 17, 2006 (71 FR 66154). As of November 13, 2006, landings estimates indicated that 151.1 percent (336.6 mt dw) of the LCS quota and 527 percent (78 mt dw) of the SCS quota for the Gulf of Mexico region had been landed during the first trimester of 2006. Additionally, landings estimates for the South Atlantic region increased to a total of 287.2 percent (393.1 mt dw) of the LCS quota and 15.6 percent (44.5 mt dw) of the SCS quota for the first trimester of 2006. The North Atlantic region harvested only 3.8 percent (0.2 mt dw) of its LCS quota and 0 percent of the SCS quota during the first trimester in 2006.

To address the overharvests in the South Atlantic and Gulf of Mexico regions and the underharvest in the North Atlantic region, NMFS is implementing LCS and SCS management measures outlined in Table 1 via this combined final and temporary rule for emergency action. These measures are necessary to ensure that over- and underharvests from 2006 are accounted for and social and economic impacts of the over- and underharvests are analyzed. The overall annual baseline quota for LCS and SCS has not been affected.

TABLE 1. QUOTA AND SEASON MANAGEMENT ACTIONS THAT WILL BE TAKEN FOR ATLANTIC SHARKS IN DIFFERENT MANAGEMENT REGIONS.

Species Complex	Region		
	North Atlantic	South Atlantic	Gulf of Mexico
Large Coastal Sharks	Final Rule	Final Rule	Temp. rule for emergency action
Small Coastal Sharks	Final Rule	Temp. rule for emergency action	Temp. rule for emergency action
All Pelagic Sharks		Final rule	

Two of the five alternatives that were initially analyzed in the draft EA and proposed rule no longer apply. These were alternative 2 (to adjust the South Atlantic regional LCS quota for the first trimester by transferring up to 10 percent of the 2006 first trimester quota from the Gulf of Mexico region) and alternative 5 (to transfer LCS underharvest from the Gulf of Mexico's first trimester of 2006 to the South Atlantic region in 2007). Since an underharvest of LCS in the Gulf of Mexico region during the 2006 first trimester no longer exists, quota cannot be transferred in 2007 to cover the overharvest of LCS in the South Atlantic region during the 2006 first trimester. The alternatives that were analyzed (former alternatives 1, 3, and 4) have been renumbered as alternatives A1, A2, and A3. The renumbered alternatives have been carried forward and analyzed in the final EA. NMFS is finalizing preferred alternative A2, which was also the preferred alternative in the proposed rule. The preamble of the October 5, 2006, proposed rule (71 FR 58778) contains the alternatives that have been carried forward and analyzed in the final EA and final rule and is not repeated here. The final two alternatives (Alternatives A4 and A5) would have modified the percent of the annual baseline quota each region received based on recent harvest (A4) or would have spread the impacts of the current overharvest out over several years (A5).

Due to the overharvest of LCS and SCS in the Gulf of Mexico during the 2006 first trimester, NMFS analyzed four new alternatives to address the LCS quota and season length in the Gulf of Mexico region and SCS quotas in the South Atlantic and Gulf of Mexico regions. One alternative (alternative B1), if selected, would maintain existing procedures for addressing regional trimester over- and underharvests for SCS when establishing the regional quotas for the first trimester of 2007 (status quo). This alternative would close the Gulf of Mexico regional SCS fishery during the 2007 first trimester due to the extensive overharvest in the 2006 first trimester. It would also apply the underharvests in the first trimester of 2006 to the 2007 first trimester for the North and South Atlantic regions, resulting in 2007 first trimester quotas of 18.8 mt dw and 371.6 mt dw, respectively. NMFS did not select this alternative because it would cause negative economic impacts on the Gulf of Mexico region by not allowing a SCS fishery during the 2007 first trimester.

The preferred alternative (alternative B2) transfers 63.2 mt dw of the South Atlantic's regional SCS underharvest during the 2006 first trimester to the Gulf of Mexico region in the 2007 first trimester. This gives the Gulf of Mexico region a 15.1 mt dw SCS quota and affords them a SCS fishery that would have otherwise not been possible. NMFS prefers this alternative because it has positive economic impacts in the Gulf of Mexico region. In addition, NMFS does not anticipate that the quota transfer in this alternative will affect the South Atlantic region since the region has never caught their full SCS quota in a given trimester, and NMFS is still adjusting their quota with significant

underharvest of SCS during each trimester. Finally, NMFS anticipates minimal ecological impacts by the quota transfer, given the similar catch composition of SCS between the South Atlantic and Gulf of Mexico regions. Unlike blacktip sharks, SCS are not thought to exhibit population structure between the Atlantic Ocean and Gulf of Mexico.

The third new alternative (alternative B3), if selected, would transfer 126.4 mt dw of the South Atlantic's regional SCS underharvest during the 2006 first trimester to the Gulf of Mexico region in the 2007 first trimester. This amount would cover the overharvest of SCS in the Gulf of Mexico during the 2006 first trimester (63.2 mt dw) as well as give the region additional SCS quota during the 2007 first trimester. NMFS did not select this alternative because under the other preferred alternative, alternative A2, the South Atlantic region will be closed to directed LCS fishing during the 2007 first trimester. Therefore, the South Atlantic region might need a larger SCS quota during the 2007 first season to compensate for the LCS fishery closure.

The last new alternative (alternative B4), if selected, would transfer SCS underharvests from each region during the 2006 first trimester into a reserve category that would then be used to cover the overharvest of any region in the 2007 first trimester. NMFS did not selected this alternative because it could cause negative economic impacts in the North and South Atlantic regions and because this type of action would be more appropriate in a permanent rule rather than a temporary rule. Under the status quo, alternative B1, the 2006 first trimester underharvests in the North and South Atlantic regions would carry over to their quotas in the 2007 first trimester, resulting in 2007 first trimester quotas of 18.8 and 371.6 mt dw, respectively. However, under this alternative, the North and South Atlantic regions would allocate their baseline first trimester SCS quotas or 0.1 and 131.5 mt dw, respectively. This would be a difference in SCS quota of 18.7 and 240.1 mt dw, respectively.

Response To Comments

Comments on the October 5, 2006, proposed rule (71 FR 58778) received from October 5, 2006, through November 17, 2006, are summarized below and are organized according to issue, together with NMFS' responses.

A. Economic Aspects of the Shark Fishery

Comment 1: NMFS received a comment regarding the phase-out of most, if not all, of the U.S. Atlantic commercial shark fishery, and a buyback program because numerous fishermen will be affected by the abbreviated fishing season in 2007 and pending regulations based upon the LCS and dusky shark stock assessment. Stopgap measures such as the institution of minimum sizes, retention of all fins for better species identification, and designation of additional closed areas do not appear, at the time, to be capable of slowing the decline of LCS. Directed commercial fisheries for sandbar and other LCS fisheries cannot continue much longer, except perhaps with a tightly limited and monitored commercial fishery directed at the blacktip shark in the Gulf of Mexico.

Response: This rule addresses overharvests that occurred in the South Atlantic and Gulf of Mexico regions and establishes the appropriate fishing seasons and quotas for the first trimester of 2007, consistent with the rebuilding plan established in 2003 (December 24, 2003; 68 FR 74746). An amendment to the Consolidated Highly Migratory Species Fishery Management Plan will be forthcoming in 2007 (November 7, 2006; 71 FR 65086). The amendment will implement measures to address the recent stock assessments for LCS and dusky sharks, which indicate that these species are in need of more protective measures to prevent further declines in their abundance. The measures included in this amendment will be wide-ranging and evaluate the most effective means of aligning harvest of LCS with the most recent stock assessments. Such measures could include those listed in the comment. Additionally, NMFS is currently reviewing a buyback business plan conducted by the Gulf of Mexico and South Atlantic Fisheries Foundation for the industry and submitted to NMFS in September 2006.

Comment 2: NMFS received numerous comments stating that shark fishermen are also impacted by restrictions and management measures in other fisheries, especially the reef fish, snapper/grouper, and golden tilefish fisheries. Fishermen in Cocoa Beach, FL indicated that quota cuts in the golden tilefish fishery off the Atlantic coast of Florida coupled with the proposed closure of the LCS fishery in this region will cost fishermen a lot of money. The effect on the commercial shark business is that some vessels will go into bankruptcy. NMFS' statements of ''no significant impacts'' regarding the collective impact of these actions has no bearing on reality.

Response: NMFS realizes that there are few participants in HMS fisheries that depend solely on the species under the purview of the HMS Management Division. Shark fishermen participants also target reef fish, snapper/grouper, mackerel, and golden tilefish either on the same trip or at different times of the year. Pelagic longline fishermen target swordfish and tunas in addition to dolphin and/or wahoo. Current regulations state that if overharvests of LCS or SCS occur, these overharvests must be taken into consideration when establishing subsequent years' quota for that trimester. In the analyses that established these regulations, NMFS took into account the fact that few, if any, HMS fishermen rely solely on HMS fish and that closures and opening of other fisheries affect whether or not HMS fishermen will fish for HMS species. This current rulemaking attempts to provide fishermen with every opportunity to catch LCS and SCS while maintaining consistency with existing regulations and preventing overfishing of managed species. NMFS is also working on methods to improve fishery management on a more ecosystem-based level. In regard to the statement regarding ''no significant impact,'' NMFS did not state in the proposed rule that the proposed actions would have no significant impact on a substantial number of small entities. Rather, NMFS conducted an Initial Regulatory Flexibility Analysis (IRFA) consistent with the Regulatory Flexibility Act. While NMFS received several comments regarding the potential economic impacts of the proposed rule, NMFS did not receive any comments specific to the IRFA. Nonetheless, NMFS considered the economic impacts and conducted a FRFA for the final rule portion of this action. A summary of the FRFA is provided below in the Classification section.

Comment 3: The ultimate solution for the participants in the shark fishery and for fisheries management is the implementation of individual fishing quotas (IFQs). All of the serious shark fishermen that I am in contact with would support IFQs. Allocation could be related to catch history. They would be willing to pay for observers if necessary. This would allow the fishermen to fish when the sharks are there and when the market is right and when it did not conflict with other fisheries.

Response: NMFS agrees that implementation of IFQs could be beneficial for both fishermen and the resource. However, implementation of IFQs will take several years as NMFS

and fishermen would need to devise a program that would split the quota among participants in a equitable and appropriate manner. The development of such a program would also likely require an Environmental Impact Statement (EIS) and is beyond the scope of this rulemaking, which was only meant to establish season lengths and quotas for the first season of 2007, consistent with existing regulations. As stated in previous documents, NMFS would like to review the existing HMS commercial permit structure in the near future. Such a review could include IFQs as a potential solution to some of the problems in the current permit structure.

Comment 4: The economic impacts of closing the South Atlantic region are more likely neutral because the fishermen harvested 230 percent of the region's trimester quota in 2006, so they attained the economic benefits already.

Response: While fishermen received greater revenues in the first trimester of 2006 resulting from the overharvest, those economic benefits would not likely address the future cash flow issues that fishing operations may face in the future due to extended closures. The economic impacts of closing the South Atlantic region would likely include decreases in employment, financing costs to cover fixed costs, difficulty covering fixed costs, and potential negative cash flows that could result in business failures of marginal operators. In addition, the lack of LCS supply to South Atlantic dealers during this period would potentially impact those dealers' ability to meet the demands of their customers for prolonged periods potentially resulting in lost clients as buyers shift their demand to other regions. Finally, shoreside support businesses would also likely receive lower demands for gear, fuel, and other services if the closures result in less fishing activity by affected vessels.

Comment 5: The negative economic impacts were underestimated, the South Atlantic is closed for LCS in October, meaning the South Atlantic will experience a 10 month closure of this fishery and not just 6 months as stated.

Response: NMFS acknowledges that the South Atlantic will in fact experience a closure in the South Atlantic region for LCS that, in total, is longer than six months. The analysis for previous rules accounted for the closure period at the end of 2006. As such, technically, the scope of analysis for this particular rulemaking starts on January 1, 2007, and the baseline for analysis in this rule already factors in the closure period at the end of 2006. However, NMFS takes prior closures and potential future closures into consideration when determining the type of management actions to implement. Thus, in this rulemaking, NMFS is opening the entire South Atlantic region, including the Mid-Atlantic shark closed area, for the month of July, pending available quota, to ensure that all fishermen in the South Atlantic region have the same opportunity to fish in their region in the second season of 2007. This action is being taken after considering the impacts of a long closure on the region (October 3, 2006, to July 2007), the potential for a longer closure or short 2nd season given the overharvest in the second season of 2006, and closures in other fisheries.

Comment 6: Alternative 5, transfer the LCS underharvest from the Gulf of Mexico's first trimester of 2006 to the South Atlantic first trimester of 2007 is preferable because it would provide some economic benefits for the shark fishery in case it is phased out.

Response: Alternative 5 would have distributed a portion of the originally anticipated LCS underharvest from the Gulf of Mexico's landings from the first trimester of 2006 to the South Atlantic first trimester of 2007, thus providing for a first trimester season for 2007 in the South Atlantic. While this alternative would have provided some revenue generating opportunities in the South Atlantic, this alternative was not selected as it would not account for the overharvest experienced in the South Atlantic region during the first trimester of 2006, resulting in additional fishing mortality in 2007 and negative ecological impacts as a consequence. Furthermore, the potential exists for the South Atlantic region to exceed its 2007 first trimester quota, exacerbating future potential economic and ecological impacts as a result.

Revised 2006 first trimester harvest numbers now indicate that the Gulf of Mexico's landing from the first trimester resulted in an overharvest of 113.9 mt of LCS. Therefore, a quota transfer from the Gulf of Mexico region to the South Atlantic region for the 2007 first trimester no longer exists, and therefore this alternative was not considered in the final rule and EA.

B. Quota Monitoring and Trimester Seasons

Comment 7: NMFS received several comments, including one from the State of North Carolina, regarding the mechanisms for reporting and quota monitoring, including: the Agency needs real-time quota monitoring to prevent this from happening in the future; and quotas for sharks should be like they are for flounder - you should be allowed to go fishing wherever you want and allow fishermen to land fish even when the season is closed; NMFS should develop some additional transparency on the data collection; and NMFS should look for independent means to verify 2006 landings and investigate how long this situation has existed.

Response: NMFS realizes there were problems with reporting shark dealer landings during the first trimester season of 2006. Several weeks after the publication of the proposed rule on October 2, 2006, NMFS became aware of extensive landings by several shark dealers that were not received by the Agency during the first trimester of 2006. Incomplete or non-submitted data make it difficult for the Agency to effectively monitor quotas and establish future seasons based on these landings. Accordingly, NMFS is pursuing options to ensure that these issues do not occur in the future and to investigate problems that have occurred in the past. While implementation of real-time quota monitoring may be an effective substitute for the twice monthly reporting regime currently in place, such a system would still depend on shark dealers to submit their data in a timely manner and would require additional time and Agency resources that are beyond the objectives of this rulemaking. Similar to other fisheries, sharks need to be managed in a comprehensive way, including managing them through the use of time/area closures and quotas.

Comment 8: NMFS received several comments regarding quotas in general and the trimester seasons, including: quotas used to be beneficial and some regulation is a good thing, but trimester seasons are ineffective and semi-annual seasons are better; there are conflicts with the openings and closings of other fisheries with the trimester fishing seasons as currently configured; dividing the fishing year into two parts allowed for more flexibility and was more workable for the fishermen; and the Agency needs to re-evaluate how the quota that was transferred between the South Atlantic and Gulf of Mexico regions back in 2004; if the South Atlantic regional quota were at pre-transfer levels, the overharvest may not have been as severe.

Response: This rule will not address the trimester seasons or shark fishing regions that were established in 2003 Amendment 1 to the 1999 FMP for Atlantic Tunas, Swordfish and Sharks, and the subsequent rulemaking (November 30, 2004, 69 FR 69537).

When NMFS first implemented the trimester seasons, NMFS thought the trimesters would provide fishermen with more fishing opportunities later in the year (September through December) when they were traditionally not allowed to fish under the semi-annual seasons and to protect large pregnant female sharks and their pups from excessive fishing pressure. Similarly, NMFS thought regional quota allocations would provide NMFS with the ability to manage each region in a manner that would benefit commercial shark fishing and fishermen in that region. Under the current regime, regions that did not experience an overharvest are not penalized by quota reductions for overharvests that may occur in the adjacent region. The November 30, 2004, rulemaking adjusted the regional quota allocations based on landings data that were more recent (through 2003) than the landings information analyzed for the 2003 Amendment 1 to the 1999 FMP for Atlantic Tunas, Swordfish and Sharks (through 2001). These data indicated that landings in the Gulf of Mexico region had increased, and therefore, that region was given more quota. Effectively, this resulted in an 11 percent adjustment between the Gulf of Mexico and South Atlantic region for LCS. Had this adjustment not been initiated, the South Atlantic region would have still experienced an LCS overharvest in the first trimester of 2006 large enough to warrant a closure of the fishery, and the Gulf of Mexico region would also have had a larger overharvest. NMFS will likely re-examine trimester and regional quotas in the amendment to the Consolidated HMS FMP.

Comment 9: Carrying forward underharvests does not seem like a good idea. The Agency should only carry underharvests over for a year. Anymore than that does not make any sense. It could allow the quota to get too high. Eventually the base quota becomes meaningless.

Response: This rulemaking did not consider modifications to the existing regulations for adjustment of subsequent quotas based on over- or underharvests that occur in a given trimester season and region. In addition, underharvests is only a major issue for SCS and the first trimester in the North Atlantic region for LCS. NMFS will be conducting a stock assessment for SCS in 2007, at which time NMFS can evaluate the effect of recent carry overs on SCS populations. NMFS agrees that carrying substantial underharvest forward every year could allow the quota to get too high and could have negative ecological impacts if the entire adjusted quota is taken in one year. However, carrying forward smaller underharvests provides fishermen with additional fishing opportunities in the future, especially in circumstances where the fishermen were not able to catch their quota because of factors outside their control (i.e., hurricanes, oceanographic conditions, etc.). Similarly, removing overharvests from the next year's trimester ensures that overfishing does not occur and fisheries are managed at quota levels that are consistent with the most recent stock assessment and corresponding optimum (OY) or maximum sustained yield (MSY). The issue of substantial underharvests for bluefin tuna was recently addressed in the Consolidated HMS FMP where no more than the 100 percent of the baseline allocation can be carried forward. Similar measures could be addressed for sharks in the upcoming amendment.

Comment 10: NMFS received numerous comments expressing concern about the landings for large coastal sharks, including: why did the South Atlantic exceed their quota by so much?; the reported landings for the South Atlantic region do not make sense because most of the boats fishing for shark are based in the Gulf of Mexico and most of the effort is in that region; landings reported in Key West should be carefully analyzed because this port is unique in that boats can fish either the Gulf of Mexico or South Atlantic and land in Key West; and errors in reporting areas fished can influence the decision making process in a way that is potentially unfair to one region or another.

Response: The original proposed rule that was published on October 5, 2006, was based on landings reports that had been received through August 24, 2006. Due to the extensive overharvest of LCS in the South Atlantic region, the original dealer reports were scrutinized to ensure that there were no landings, including the ones in Key West, mistakenly attributed to the South Atlantic region's quota. In mid-October, NMFS received information that indicated that the August 24, 2006, landings data were incomplete because they did not include all the shark dealer landings for the first trimester of 2006. Landings reports that had not previously been received by the Agency were received and drastically modified the estimated landings for LCS in the Gulf of Mexico and South Atlantic regions and SCS in the Gulf of Mexico region that the proposed rule was based upon. Additionally, the Agency examined other data sources to identify dealers that were reporting shark landings via other reporting requirements.

Errors in reporting, late reporting, and no reporting are unfair to fishermen in all regions who rely on the Agency's quota monitoring to make decisions on whether or not they should or can fish for sharks. As described in the response to comment 7, the Agency is taking steps to ensure it will not happen again.

C. Season Lengths

Comment 11: NMFS received several comments on opening the second trimester in May, including: it was my hope when we switched to regional quotas that the Gulf of Mexico would be open in May, which would benefit the Gulf of Mexico and the South Atlantic by creating a year round market for sharks; when everyone opens at the same time you glut the market and we have fish in the Gulf of Mexico in May; and, is it possible to open the second trimester season in May in the South Atlantic as a result of the extensive period of time that region is proposed to be closed?

Response: The rulemaking did not evaluate quotas and season lengths for the second trimester of 2007. These measures will be addressed in a subsequent rulemaking once more landings data are available for the 2006 second and third trimester seasons. Traditionally, shark fishing in the second trimester begins in July to avoid concerns regarding pupping seasons for various species in the Gulf of Mexico and South Atlantic regions and to avoid conflicts with the fourth of July food markets. Opening the second trimester in May might be an option for consideration for the Gulf of Mexico region. However, given the decision to open the mid-Atlantic shark closed area in July, pending available quota, it is unlikely the South Atlantic region would open earlier than July for the second season.

D. Quota Transfer

Comment 12: NMFS received comments for and against transferring LCS quota from the Gulf of Mexico region to the South Atlantic region, including: any opening of the first trimester South Atlantic fishery would be better than nothing. Whether the quota allocation is transferred from the Gulf of Mexico or otherwise justified, it would be a welcome alternative to tying up the boats. Perhaps it could begin February 1, 2007, when the migration in the South Atlantic is well underway; I am concerned about shifting blacktip quota from the Gulf of Mexico region to the South Atlantic region because these

are unique populations of blacktip sharks, furthermore, since the 2006 LCS assessment stated that the population status of blacktip sharks in the South Atlantic is unknown, fishing pressure in that region should not be increased; Alternative 5, a one year, one time 120 mt dw transfer, will not make much difference; I support a one-time transfer of quota from the Gulf of Mexico region to the South Atlantic region; the State of Louisiana opposes reallocation of Gulf of Mexico quota to the South Atlantic region because the underharvest that occurred during the first trimester of 2006 was a result of the hurricane season of 2005, and underharvests in other fisheries have also taken place; and transferring quotas appears to provide economic benefit for fishermen but provides no conservation benefit to species.

Response: The Agency is aware of the economic consequences of closing the South Atlantic region to LCS fishing during the first trimester of 2007. An alternative that would transfer underharvest from the Gulf of Mexico region to the South Atlantic region was considered in the proposed rule (October 5, 2006; 71 FR 58778). As a result of revised landings estimates, which indicate that the Gulf of Mexico no longer has underharvest to transfer, this is no longer a viable alternative. Overharvests experienced by the South Atlantic region (278 percent) and the Gulf of Mexico (151 percent) limit the viable options available for the first trimester 2006 LCS fisheries, while not resulting in overfishing. As such, LCS quota transfers, as outlined in the proposed rule alternatives 1, 2, and 5, will no longer be considered in this rule making.

Under the preferred alternative, alternative B2, during the 2007 first trimester, the Gulf of Mexico region will receive a quota transfer of 63.2 mt dw from the South Atlantic's regional SCS underharvest in 2006. Unlike LCS populations, SCS are not thought to exhibit population structure between the Atlantic and Gulf of Mexico basins. In addition, SCS quotas for each region were based on historical landings, and the trimester quotas were based on public comment, and the catch composition of SCS are similar among the two regions. Therefore, the ecological impacts of reallocating SCS quota from one region to another would most likely be minimal, and would allow fishermen in the Gulf of Mexico region a SCS fishery in the first trimester of 2007 that would otherwise not be possible.

Comment 13: The State of Louisiana submitted a comment stating concern over the proposed open season for LCS and the fact that this will conflict with a state imposed shark closure in Louisiana water that exists between April 1 and June 30 each year.

Response: As a result of revised landings estimates, the Gulf of Mexico region no longer has an underharvest of LCS. As such, the season in the Gulf of Mexico will only last two weeks in the beginning of January, and there should no longer be conflicts with the closure in Louisiana state waters.

E. Preferred Alternative A2 (formerly alternative 3)

Comment 14: NMFS received several comments in support of the preferred alternative, to close the entire South Atlantic region for LCS during the first trimester of 2007, and open the entire South Atlantic region, including the mid-Atlantic shark closed area in July 2007, pending availability of quota, including: I find the preferred alternative in the proposed rule to be the most acceptable option offered by NMFS because transferring overharvest and underharvest between regions makes no biological sense given the current LCS status; closing the South Atlantic region until July is justified given the overharvest in the first trimester of 2006, and will help to protect pregnant female sandbar sharks along the Atlantic coast; and the preferred alternative would be good for the Gulf of Mexico region because we would have single access to the LCS. The market would not be flooded in January as it usually is.

Response: The preferred alternatives have changed since the October 5, 2006, rulemaking as a result of revised landings data received after the proposed rule had published. These data indicate an overharvest for LCS in the Gulf of Mexico during the first trimester of 2006, which will result in the Gulf of Mexico having a two-week LCS season instead of the full trimester as proposed. The transfer of quota from the Gulf of Mexico region is no longer an option. The preferred alternatives account for overharvests in the LCS and SCS fisheries while providing additional fishing opportunities to offset the negative ecological impacts of a six month closure in the South Atlantic region.

Comment 15: NMFS received several comments opposing the preferred alternative and that NMFS should reverse course and further protect depleted populations of these shark species.

Response: In light of the extensive overharvest of LCS that occurred in the South Atlantic during the first trimester of 2006, NMFS has preferred to close the LCS fishery for six months, and NMFS is opening the mid-Atlantic shark closed area in July, pending available quota. This time period for a closure of the entire South Atlantic region encompasses the entire first trimester season of 2007 plus two additional months (May and June). While this opening will allow for some limited fishing, it will not cause further harm to the species. NMFS realizes that the ecological impacts of this alternative would be neutral or slightly negative; however, as described in the EA, this alternative is the best balance of all the factors (social, economic, and ecological) that the Agency must consider during a rulemaking.

F. Mid-Atlantic Shark Closed Area

Comment 16: NMFS received numerous comments expressing concern about reopening the mid-Atlantic shark closed area in July 2007 depending upon availability of quota for that region and trimester, including: I question opening the mid-Atlantic shark closed area in July of 2007, this may be balanced by a larger closure (South Atlantic wide) January through June, however, the closed area was closed for a reason; the Agency needs to ensure that there are no adverse ecological impacts as a result of opening the mid Atlantic shark closed area; what is the ecological value of the closed area off North Carolina?; the benefits of reopening a closed area need to be weighed against the fact that this may set a precedent for opening other closed areas; what will the ecological impacts be of opening the closed area?; why would you not need an EIS to modify the closed area since an EIS was required to implement the closure?; the EA provides dubious justification for the assertions that it met Council of Environmental Quality (CEQ) context and intensity criteria that actions taken will not significantly jeopardize the sustainability of target and non-target species. The EA stated that NMFS does not know the extent of the impact; what does the BLL closed area have to do with any of this, the overharvest was for the entire region not just the mid-Atlantic closed area; the mid-Atlantic shark closed area raises National Standard 4 issues; the majority of the HMS advisory panel (AP) stated at the October 2006 meeting, that the proposal to relax the time area closure was without merit; and, everyone should consider the ramifications of North Carolina closing its state waters.

Response: The mid-Atlantic shark closed area is of ecological value as both an area of high localized density of

sandbar and dusky sharks and as a Habitat Area of Particular Concern (HAPC) as an important nursery and pupping ground for these species. Although this time/area closure is of limited geographic extent, it was established for ecological reasons, not to discriminate against any particular region or user group as prohibited under National Standard 4. Comparing landings reported in the Coastal Fisheries logbooks from the South Atlantic region between 2002–2004 (without closed area) with 2005 (with closed area) indicates that landings of LCS decreased by 22.3 percent after implementation of the mid-Atlantic shark closed area. Landings of sandbar sharks in the South Atlantic region decreased by 26.7 percent in 2005 compared to 2002–2004, which could have been a result of the mid-Atlantic shark closed area. Specific to the month of July in the South Atlantic region, landings of LCS and sandbar sharks have decreased by 9.7 and 18 percent, respectively. The Agency only has one year of logbook data (2005) since the implementation of the closure, therefore, it is difficult to discern exactly what the actual ecological impacts of opening the closure for an additional month in 2007 would be. Overall ecological impacts of the preferred alternative, which includes opening the closed area for one month, is expected to be neutral or slightly negative. While the quota overage that occurred in 2006 must be accounted for ecologically, NMFS must consider the social and economic repercussions of such actions. As described below in the response to comment 17, the preferred alternative is the best balance of these interests. NMFS feels that the potential negative ecological impact of opening the mid-Atlantic shark closed area for a portion of the month of July 2007 would be minor, particularly compared to the potential economic and social impacts to fishermen and communities that rely on the area if the area remains closed.

In regard to the statement about conducting an EIS to open the closed area, the Agency must consider numerous factors in determining the NEPA action required. In this case, the Agency determined that an EIS is not necessary for the action regarding opening the closed area in part because, given the limited size and magnitude of this one time, one month opening of the mid-Atlantic closed area, NMFS does not anticipate significant effects individually or cumulatively on the environment. Nor does NMFS consider this action to be a major action. An EIS would be more likely if the Agency were more permanent or lengthy changes to the closed area. Additionally, the LCS overharvest that occurred in the South Atlantic in 2006 was unique, and occurred just prior to the release of a new LCS stock assessment report. The results of the stock assessment will most likely lead to modifications to the current structure of shark management in the Atlantic, making it very unlikely that a precedent would be set by this action. Given the results of the recent stock assessment, NMFS intends to take a more species-specific approach, compared to the current approach based on the complex as a whole, to managing sharks based on the individual stock assessments of LCS, sandbar, dusky, and porbeagle sharks. Thus, given the changes likely in shark management in the near future, this action is likely not precedent setting and likely will not be repeated.

Comment 17: NMFS also received a number of comments regarding the effects of the time area closure, specifically on sandbar and dusky sharks including: the closed area is for pups of dusky and sandbar sharks, given the assessment for sandbars, why are you opening up the closed area?; it is just a month reopening, but these stocks are in bad shape; sandbar and dusky assessments underscore the need for highly protective management measures to ensure that dusky sharks do not slip further towards extinction; NMFS should act now to strengthen conservation measures for dusky and sandbar sharks; NMFS should not open the mid-Atlantic time area closure because it is designed to protect juvenile sandbar sharks (they need 70 years to rebuild); the EA admits that the change would increase fishing mortality on dusky and sandbar sharks but it does not quantify the extent to which mortality will increase; NMFS admits an 18–percent reduction in sandbar shark landings as a result of the mid Atlantic closure before and after the closure was established; the EA dismissed the impact of the additional fishing mortality on sandbar and dusky sharks as a result of opening the mid Atlantic time area closure; the prohibited status of dusky sharks alone has not improved the status of dusky sharks, therefore, time area closure is also necessary; is the closed area part of the existing provisions of the rebuilding timeframe for sandbar sharks?; EA is vague about the impacts of proposed action on individual shark species; some of the species are likely to be disproportionately affected by the proposed actions; it is clearly inappropriate to manage sharks by multi-species complexes; would any good data be available as a result of opening the closed area; NMFS needs to ensure that observers are present onboard vessels that fish in July in the mid-Atlantic shark closed area in order to get data regarding landings and bycatch; this closed area has caused a great deal of controversy since its inception, opening for a short time period may provide some good data and determine whether or not the controversy initiated by the closure has been worthwhile; and closed area off a single jurisdiction should be eliminated from consideration, and trip limits and quotas are far more fair and equitable management tools.

Response: Alternative A2, the preferred alternative, would close the South Atlantic region to LCS fishing during the first trimester of 2007 and open the mid-Atlantic shark closed area in July 2007. The mid-Atlantic shark closed area was implemented to protect neonate and juvenile dusky and sandbar sharks by reducing discards and preventing bycatch of prohibited species during January through July. The Agency's decision to open the mid-Atlantic shark closed area in July, depending on available quota, is based on the realization that the LCS fishery in the South Atlantic region will experience a closure from the conclusion of the 2006 third trimester season (October 3, 2007) until July 1, 2007, or nine months. Historically, the second semi-annual or trimester season has opened in July. The opening of this closed area depends on the level of overharvest in the second trimester of 2006 in the South Atlantic region. Current landings estimates indicate the South Atlantic region landed 135.5 percent (205.5 mt dw) of their 2006 second trimester quota (151.7 mt dw) (November 13, 2006, 71 FR 66154); given this overharvest, the second season may not be open as long as in previous years, and may only occur for a few weeks in July 2007. If NMFS does not consider opening the mid-Atlantic shark closed area during a portion of the month of July 2007, then depending on the start date of the 2007 second trimester in the South Atlantic region, fishermen that normally fish in the closed area would not have an LCS fishery in Federal waters until September 2007, when the third LCS season traditionally opens, unless they moved to another area. This is equivalent of an 11 month LCS fishery closure in that area. Meanwhile, other areas in the South Atlantic region would have a fishery in July 2007, which would be the start of the second

trimester season. Thus, this opening may result in increased opportunity between fishery participants in the vicinity of the mid-Atlantic shark closed area and those in other portions of the South Atlantic region. Therefore, given the limited opening of the area and the amount of time the South Atlantic region will be closed (October 2006 to at least July 2007), NMFS feels that the potential negative ecological impact of opening the mid-Atlantic shark closed area for a portion of July 2007 would be minor.

The ecological impacts of this alternative are similar to alternative A1, with the exception of the impacts of opening the mid-Atlantic shark closed area. NMFS does anticipate that opening the closure for a portion of the month of July will potentially increase dead discards of dusky and sandbar sharks compared to maintaining the closure through July. However, under the existing rebuilding plan, the numbers of dead discards that may occur as a result of opening this area in for one month are anticipated to be minor. It is anticipated the number of neonates and juveniles affected by opening the closure during a portion of July will be relatively minor, especially since no fishing in the entire South Atlantic region will occur between January through June, a time during which pregnant females and neonate sandbar sharks begin to pup off the coast of Florida and dusky sharks start to pup between South Carolina and Maryland (NMFS, 2003).

According to the analyses in the 2003 Amendment 1 to the 1999 FMP Atlantic Tunas, Swordfish, and Sharks, over 80 percent of all dusky sharks observed caught in the Atlantic were caught in January through June. Of those dusky sharks observed caught in the closed area, 86 percent were caught from January through June. In July, the number of dusky sharks observed in the closed was less than 13 percent of all dusky sharks observed throughout the year. The highest catches occurred during the months of January and March. Similarly, approximately 70 percent of all sandbars observed caught in the Atlantic were caught in January through June and 81 percent were observed caught in the closed area from January through June. For sandbar sharks, 18 percent were observed caught in the closed area in July, with the month of January having the highest catches. Thus, opening the closed area for a portion of July would help mitigate the economic hardships in this region while potentially creating minor negative ecological impacts due the lack of a LCS fishery in the 2007 first trimester in the entire South Atlantic region.

As described above in the response to comment 16, data indicate that landings of LCS decreased by 22.3 percent after implementation of the mid-Atlantic shark closed area and landings of sandbar sharks in the South Atlantic region decreased by 26.7 percent in 2005 compared to 2002–2004. Specific to the month of July in the South Atlantic region, landings of LCS and sandbar sharks have decreased by 9.7 and 18 percent, respectively. These reductions could have been due to the implementation of the closed area. Data also indicate that only 6 percent of the effort (i.e., number of hooks) occurred in the closed area for the month of July compared to the rest of the Atlantic throughout the year (NMFS, 2003). However, given that the Agency only has one year of logbook data (2005) since the implementation of the closure, therefore, it is difficult to discern exactly what the actual ecological impacts of opening the closure for an additional month in 2007 would be. Nonetheless, the Agency feels that the ecological impacts of opening the closure for one month would be neutral or slightly negative.

Currently, vessels are randomly selected to carry observers; however, NMFS agrees that valuable information could be retrieved during the one month opening. As such, NMFS is investigating its ability (e.g., available resources) to increase observer coverage in that area and time and the information that could be collected (including the possibility of placing pop-up archival satellite tags on released animals). NMFS will let affected fishermen know of any changes in observer coverage, as appropriate.

G. General Comments

Comment 18: The failure to land the quota for porbeagle sharks is likely a testament to the scarcity of porbeagles. Canadian porbeagles are to be listed as endangered under their Species Risk Act, and the International Union for the Conservation of Nature (IUCN) has also listed porbeagles as endangered. NMFS has recently placed them on the Species of Concern list. In doing so, NMFS acknowledged that only approximately 15 percent of the porbeagle population is estimated to be mature breeding females. NMFS should revoke the quota for porbeagles and add them to the Prohibited Species category.

Response: Only 0.5 mt dw of the porbeagle 2006 first trimester quota was landed for all regions. NMFS does not expect an increase in fishing pressure on porbeagle sharks during 2007 as fishermen that catch porbeagles as bycatch prefer to target swordfish and tuna (i.e., they are not targeting porbeagles) since swordfish and tuna meat have higher market values. However, due to the overfished status of this species (November 7, 2006; 71 FR 65086), NMFS will develop a rebuilding plan for porbeagles in the upcoming amendment to the Consolidated HMS FMP. Any necessary changes in porbeagle quota will be considered at that time.

Comment 19: Shark quotas have been too small, and the shark science is incorrect; my catches have been increasing even though the seasons have been shortened. Why are our quotas still being reduced?; and with some rebuilding times measured in hundreds of years, what is the Agency's intention in terms of maintaining a viable fishery?

Response: The current LCS quotas were established in accordance with the 2002 LCS stock assessment and implemented by the 2003 Amendment to the 1999 FMP for Atlantic Tunas, Swordfish, and Sharks. Any changes to these quotas, based on the 2005/2006 LCS stock assessment, 2005 porbeagle shark assessment, and 2006 dusky shark assessment will be done in an amendment to the 2006 Consolidated HMS FMP. While an individual fisherman's catches may have increased during different periods of time, the stock assessments indicated that the overall catch rates for most species individually assessed (except for the Gulf of Mexico blacktip sharks) are on the decline. In the 2002 assessment, LCS were overfished with overfishing occurring and sandbar sharks had overfishing occurring. Based on the current assessments, sandbar, and dusky sharks have been determined to be overfished with overfishing occurring, and porbeagle sharks have overfishing occurring. As such, NMFS has adjusted quotas, and will continue to adjust quotas for these species, as appropriate, to rebuild these stocks and end overfishing. As part of these adjustments, NMFS will consider commercial and recreational management measures that will provide some level of commercial and recreational fishing as well as the opportunity to rebuild the resource.

Comment 20: The sandbar shark assessment changed dramatically from the last assessment, primarily as a result of the maturity ogives. There is significant concern surrounding this change and a formal review of the data needs to be accomplished before new measures are proposed. Additionally, continued citation of the dusky shark assessment that has been neither peer-

reviewed nor based on an accepted modeling technique is premature.

Response: The maturity ogives used in the 2006 sandbar shark assessment were based on the best available science for sandbar sharks. The current LCS stock assessment, including the blacktip and sandbar sharks assessments, were conducted under the Southeast Data and Review (SEDAR) process. During the peer review process of the assessment, the reviewers requested analyses using the maturity ogive from the 2002 stock assessment. The result of that sensitivity analysis was similar to the result using the updated ogive. The dusky shark assessment was started in 2002, before the SEDAR process was initiated. This assessment was done at the request of the industry and others, who wanted more species-specific assessments conducted. The modeling techniques used in this assessment are based on commonly accepted assessment practices that have been internally reviewed within the NMFS. In addition, staff members of the Southeast Fisheries Science Center that were involved in the 2005/2006 LCS stock assessment, and are therefore familiar with appropriate stock assessment approaches, conducted the dusky shark assessment. Therefore, this assessment constitutes the best available science for dusky sharks.

Changes From the Proposed Rule

NMFS has made several changes from the October 5, 2006, proposed rule (71 FR 58778) regarding the Gulf of Mexico's regional SCS and LCS quotas and LCS season and the South Atlantic's regional SCS quotas. These changes are outlined below. The proposed management measures for the North Atlantic regional LCS and SCS and South Atlantic regional LCS and pelagic sharks did not change. Similarly, the proposed measure to open the mid-Atlantic closure in the month of July, pending available quota, did not change.

1. In the proposed rule, NMFS proposed that the Gulf of Mexico region would have a LCS quota of 295.8 mt dw. This proposal was based on landings estimates as of August 24, 2006. Updated landings estimates on November 13, 2006 (71 FR 66154), indicated that Gulf of Mexico region harvested 151.1 percent (336.6 mt dw) of their LCS quota during the first trimester of 2006. Thus, due to the additional landings reports and the overharvest of LCS in the Gulf of Mexico region during the 2006 trimester, NMFS is adjusting the quota to 62.3 mt dw (176.1 mt dw regional and baseline quota – 113.8 mt dw overharvest).

2. In the proposed rule, NMFS proposed that the Gulf of Mexico region would have a LCS season of January 1, 2007, until April 30, 2007. As described in the proposed rule, this season length was based on calculations of the average catch rates from January through April during the first season in recent years (2003–2006) and the available quota. Because state landings during a Federal closure are counted against the quota, NMFS also considered the average amount of quota reported as received during the Federal closure dates of the years used to estimate catch rates. Based on revised landings estimates, the season length for the Gulf of Mexico region must be recalculated.

Based on the average January LCS catch rates in recent years in the Gulf of Mexico region, NMFS calculates that approximately 91.6 percent of the available first trimester LCS quota (62.3 mt dw) would likely be taken in two weeks, and 137.4 percent of the available LCS quota would likely be taken in three weeks. Dealer data also indicate that, on average, approximately 4 mt dw of LCS has been reported received by dealers during a Federal closure. This is approximately 6.4 percent of the available quota. If catch rates in 2007 are similar to the average catch rates from 2003 to 2006, 98 percent (91.5 + 6.4 percent) of the first trimester quota could be caught in two weeks, and 144 percent (137.4 + 6.4) of the quota could be caught in three weeks. Thus, NMFS will open the fishery in the Gulf of Mexico region on January 1, 2007, and close the fishery on January 15, 2007 (two weeks).

3. In the proposed rule, NMFS proposed that the Gulf of Mexico, South Atlantic, and North Atlantic regions would have SCS quotas of 24.9, 374.0, and 18.7 mt dw, respectively. This proposal was also based on landings estimates as of August 24, 2006. Updated landings estimates on November 13, 2006 (71 FR 66154), indicated that Gulf of Mexico region harvested 527 percent (78 mt dw) of their SCS quota during the first trimester of 2006. Meanwhile, the South and North Atlantic regions harvested 44.5 and 0 mt dw, respectively, of their SCS quotas. Due to the additional landings reports, NMFS is allocating 63.2 mt dw of the SCS underharvest in the South Atlantic region during the 2006 first trimester to the Gulf of Mexico during the 2007 first trimester. This will result in a SCS quota of 15.1 mt dw for the Gulf of Mexico region and 307.3 mt dw of SCS quota in the South Atlantic region during the first trimester of 2007. Based on the underharvest in the 2006 first trimester (18.7 mt dw), the North Atlantic region will have a 2007 first trimester SCS quota of 18.8 mt dw.

Quotas for First Trimester 2007

Pursuant to 50 CFR 635.27(b)(1)(iii) and (iv), the 2007 annual base landings quotas are 1,017 mt dw (2,242,078 lb dw) for LCS and 454 mt dw (1,000,888.4 lb dw) for SCS. The 2007 quota levels for pelagic, blue, and porbeagle sharks are 488 mt dw (1,075,844.8 lb dw), 273 mt dw (601,855.8 lb dw), and 92 mt dw (202,823.2 lb dw), respectively. This final and temporary rule for an emergency action does not change these overall base landings quotas. Table 2 describes the quotas for LCS, SCS, and pelagic sharks for the various regions (if applicable) for the first trimester of 2007 adjusted for over- and underharvests that occurred during the first trimester of 2006.

Existing regulations do not allow underharvests of pelagic sharks to be carried forward to the next fishing management period. As of August 24, 2006, approximately 20.3 mt dw had been reported landed in the 2006 first trimester fishing season in total for pelagic, blue, and porbeagle sharks combined. Thus, the pelagic shark quota does not need to be reduced consistent with the current regulations 50 CFR 635.27(b)(1)(iv). The 2007 first trimester season quotas for pelagic, blue, and porbeagle sharks are 162.7 mt dw (358,688 lb dw), 91 mt dw (200,619 lb dw), and 30.7 mt dw (67,681 lb dw), respectively.

Fishing Season Notification and Quotas for the First Trimester Season 2007

The first trimester fishing season of the 2007 fishing year for SCS, pelagic sharks, blue sharks, and porbeagle sharks in the northwestern Atlantic Ocean, including the Gulf of Mexico and the Caribbean Sea, will open on January 1, 2007 (Table 2). When quotas are projected to be reached for the SCS, pelagic, blue, or porbeagle sharks, the Assistant Administrator (AA) will file notification of closures at the Office of the **Federal Register** at least 14 days before the effective date, consistent with 50 CFR 635.28(b)(2).

Pursuant to 50 CFR 635.5(b)(1), shark dealers must report any sharks received twice a month. More specifically, sharks received between the first and 15th of every month must be reported to NMFS by the 25th of that same month and those received between the 16th and the end of the month must be reported to NMFS by the 10th of the following month. Thus, in order to provide consistency and predictability in managing the fishery, NMFS aims to close the Federal LCS fishery on either

the 15th or the last day of any given month.

Final Opening and Closing Dates and Quotas

Final opening and closing dates for the 2007 first trimester season, by region and species group, are provided in Table 2.

TABLE 2. SEASONS AND QUOTAS FOR LCS, SCS, AND PELAGIC SHARKS FOR THE FIRST TRIMESTER OF 2007. ALL QUOTAS AND LANDINGS ARE DRESSED WEIGHT, IN METRIC TONS, UNLESS SPECIFIED OTHERWISE.

First Trimester Season 2007					
Species Group (Annual Quota)	Region (Allocation)	Opening Date	Closure Date	Quota	Rule Type
Large Coastal Sharks (1,017)	Gulf of Mexico (52 %)	January 1, 2007	January 15, 2007, 11:30 p.m. local time	62.3 (137,347 lb dw)	Temp. rule for emergency action
	South Atlantic (41 %)	Closed Entire Season		-112.9 (248,899 lb dw)	Final Rule
	North Atlantic (7 %)	January 1, 2007	April 30, 2007, 11:30 p.m. local time	7.9 (17,416 lb dw)	Final Rule
Small Coastal Sharks (454)	Gulf of Mexico (10 %)	January 1, 2007	To be determined, as necessary	15.1 (33,289 lb dw)	Temp. rule for emergency action
	South Atlantic (87 %)			308.4 (679,899 lb dw)	Temporary rule for emergency action
	North Atlantic (3 %)			18.8 (41,446 lb dw)	Final Rule
Blue Sharks (273)	No regional quotas	January 1, 2007	To be determined, as necessary	91 (200,619 lb dw)	Final Rule
Porbeagle sharks (92)				30.7 (67,681 lb dw)	Final Rule
Pelagic Sharks other than porbeagle or blue (488)				162.7 (358,688 lb dw)	Final Rule

Comment Period

NMFS is accepting comments on the temporary rule for emergency action portion of this action through February 12, 2007.

Classification

NMFS has determined that this action is consistent with section 304(c)(6) of the Magnuson-Stevens Act, including the national standards, and other applicable law. The emergency actions are published under the authority of Section 305(c) of the Magnuson-Stevens Act.

Under 5 U.S.C. 553(b)(5), the Assistant Administrator finds good cause to waive prior notice and opportunity for public comments on the emergency portion of this action as such prior notice and opportunity for public comment is impracticable and contrary to the public interest.

Prior notice and opportunity for public comment is impracticable and contrary to the public interest because it would prevent NMFS from taking immediate action to stem the overharvest of LCS and SCS in the Gulf of Mexico region in the 2006 first trimester. NMFS was not aware of these overharvests until the end of October 2006 and did not have definitive estimates of landings until mid-November 2006. As the fishing season for LCS and SCS opens on January 1, 2007, NMFS has insufficient time to allow for public comments on this action as it needs to implement these emergency measures in time for the season to open as otherwise further overfishing could occur with no management measures in place to halt it. Previous catch rates indicate that fishermen could catch almost 37 percent of the baseline LCS quota in the South Atlantic region if the fishery remains open until January 15, 2007, and almost 55 percent if the fishery remained open through the third week of January. Similarly, previous catch rates indicate that the entire available LCS quota for the first 2007 season in the Gulf of Mexico region could be taken in the first two weeks of January. Given the fact that fishermen caught almost three times the available LCS quota in the South Atlantic in 2006 and experienced overharvests in the Gulf of Mexico region for LCS, such an additional harvest and increase in fishing mortality would be contrary to the rebuilding plan outlined in the 2003 Amendment 1 to the 1999 FMP for Atlantic Tunas, Swordfish, and Sharks and would cause serious damage to the resource. If action is not taken, fishing mortality would increase, contrary to the rebuilding plan outlined in the 2003 Amendment 1 to the 1999 FMP for Atlantic Tunas, Swordfish, and Sharks and serious damage to the fishery resource could occur.

Similarly, the Assistant Administrator find good cause under 5 U.S.C.(d)(3) to waive part of the 30–day delay in effectiveness of the this entire combined action. NMFS needs to implement these measures in a timely manner to address the overharvest of LCS in the Gulf of Mexico and South Atlantic regions in the 2006 first trimester and prevent serious damage to the fishery resources. Due to late Federal shark dealer reports, which NMFS received during the comment period for the initial proposed rule, significant landings of LCS and

SCS from the Gulf of Mexico region during the first 2006 trimester were not included in previous published landings estimates and the proposed rule. NMFS needs to implement this action immediately in order to prevent fishing for LCS in the South Atlantic region starting in January 1, 2007. Without this action, the baseline quota levels will take effect and fishermen could begin to fish for LCS on January 1, 2007, in all regions, including those that had significant overharvests in 2006. Previous catch rates indicate that fishermen could catch almost 37 percent of the baseline LCS quota in the South Atlantic region if the fishery remains open until January 15, 2007, and almost 55 percent if the fishery remained open through the third week of January. Similarly, previous catch rates indicate that the entire available LCS quota for the first 2007 season in the Gulf of Mexico region could be taken in the first two weeks of January. Given the fact that fishermen caught almost three times the available LCS quota in the South Atlantic in 2006 and experienced overharvests in the Gulf of Mexico region for LCS, such an additional harvest and increase in fishing mortality would be contrary to the rebuilding plan outlined in the 2003 Amendment 1 to the 1999 FMP for Atlantic Tunas, Swordfish, and Sharks and would cause serious damage to the resource.

This combined final and temporary rule for emergency action has been determined to be not significant for purposes of Executive Order 12866.

In compliance with Section 604 of the Regulatory Flexibility Act, a Final Regulatory Flexibility Analysis (FRFA) was prepared for this rule. The FRFA analyzes the anticipated economic impacts of the preferred actions and any significant alternatives to the final rule portion of this action (not the action taken via emergency action) that could minimize economic impacts on small entities. Each of the statutory requirements of Section 604 of the Regulatory Flexibility Act has been addressed, and a summary of the FRFA is below. The full FRFA and analysis of economic and ecological impacts, are available from NMFS (see ADDRESSES). The temporary rule for emergency action portion of this rulemaking is exempt from the procedures of the Regulatory Flexibility Act because the rule is issued without opportunity for prior notice and opportunity for public comment.

Section 604(a)(1) of the Regulatory Flexibility Act requires the Agency to state the objective and need for the rule. As stated in the preamble and in the proposed rule, the objective of this rule is to establish the quotas and season length for the 2007 first season of the Atlantic shark fishery consistent with the Consolidated HMS FMP and the rebuilding plan established in the 2003 Amendment 1 to the Atlantic Tunas, Swordfish, and Sharks FMP. NMFS needs to implement this action in order to maintain fishing mortality at the levels designated in the 2003 Amendment 1 to the 1999 FMP for Atlantic Tunas, Swordfish, and Sharks to prevent serious damage to the fishery resource.

Section 604(a)(2) of the Regulatory Flexibility Act requires the Agency to summarize significant issues raised by the public comment in response to the IRFA, a summary of the assessment of the agency of such issues, and a statement of any changes made as a result of the comments. The IRFA was done in the draft EA for the 2007 first trimester season for the LCS South Atlantic quota management alternatives considered for the proposed rule. NMFS received several comments on the proposed rule and draft EA during the public comment period. A summary of these comments and the Agency's responses are included earlier in this action. NMFS did not receive any comments specific to the IRFA, but did receive a limited number of comments related to economic issues and concerns. NMFS has addressed these comments in the ''Response to Comments'' section of this action. The specific economic concerns are also summarized here.

Comments were received suggesting the economic impacts of closing the South Atlantic region are more likely neutral because the overharvest of the region's trimester quota in 2006 resulted in fishermen already receiving the economic benefits. While fishermen received greater revenues in the first trimester of 2006 resulting from the overharvest, those economic benefits would not likely address the economic impacts of future cash flow issues that fishing operations may face due to extended closures in the future.

Public comment also indicated that Alternative 5 in the proposed rule was preferable to fishermen because it would provide some economic benefits for the shark fishery in case it is phased out. Alternative 5 in the proposed rule would have distributed a portion of the originally anticipated LCS underharvest from the Gulf of Mexico region's landings from the first trimester of 2006 to the South Atlantic region first trimester of 2007. This transfer would have provided for a limited first trimester season for 2007 in the South Atlantic region. While this alternative would have provided some revenue generating opportunities in the South Atlantic region, this alternative was not selected as it would not account for the overharvest experienced in the South Atlantic region during the first trimester of 2006, resulting in additional fishing mortality in 2007 and negative ecological impacts as a consequence. Furthermore, the potential exists for the South Atlantic region to exceed its 2007 first trimester quota, exacerbating future potential economic and ecological impacts as a result. Revised 2006 first trimester harvest numbers now indicate that the Gulf of Mexico's landing from the first trimester resulted in an overharvest of 113.9 mt of LCS. After calculating 2007 and 2008 adjusted quotas for the South Atlantic region, NMFS determined that this alternative would not allow for a first trimester season in 2007, and therefore this alternative is now not further analyzed.

Finally, NMFS also received comment that the negative economic impacts were underestimated in the proposed rule since the South Atlantic region was closed for LCS in October 2006, meaning the South Atlantic would experience a 10 month closure of this fishery and not just the six months stated. NMFS acknowledges that the South Atlantic region will in fact experience a closure in the South Atlantic region for LCS that is in total longer than six months. Given that the analysis for previous rules already accounted for the closure period at the end of 2006, technically the scope of analysis for this particular rulemaking starts on January 1, 2007, and the baseline for analysis in this rule factors in the closure period at the end of 2006. Nonetheless, NMFS did consider the economic impacts of a nine-month closure (October 3, 2006, to the end of June 2007) and closures in other fisheries when determining the final action.

No changes were made in the rule as a result of these comments.

Section 604(a)(3) of the Regulatory Flexibility Act requires the Agency to describe and provide an estimate of the number of small entities to which the rule will apply. NMFS considers all HMS permit holders to be small entities because they either had gross receipts less than $3.5 million for fish-harvesting, gross receipts less than $6.0 million for charter/party boats, or 100 or fewer employees for wholesale dealers. These are the Small Business Association size standards for defining a small versus large business entity in this industry. As of February 2006, there were a total of 552 commercial permit holders in the Atlantic shark fishery

(240 directed and 312 incidental permits). Comparing 2005 logbook data with permit holders indicates that there were 86 active vessels in the Gulf of Mexico region, 46 active vessels in the South Atlantic region, and 6 active vessels in the North Atlantic region. More information regarding the numbers of small entities involved in the fishery and their locations can be found in Chapter 6 of the EA (see **ADDRESSES**).

Section 604(a)(4) of the Regulatory Flexibility Act requires the Agency to describe the projected reporting, recordkeeping, and other compliance requirements of the final rule, including an estimate of the classes of small entities which would be subject to the requirements of the report or record. None of the alternatives considered for this final rule would result in additional reporting, recordkeeping, and compliance requirements.

Section 604(a)(5) of the Regulatory Flexibility Act requires the Agency to describe the steps taken to minimize the significant economic impact on small entities consistent with the stated objectives of applicable statutes. Additionally, the Regulatory Flexibility Act (5 U.S.C. § 603(c)(1)-(4)) lists four general categories of ''significant'' alternatives that would assist an agency in the development of significant alternatives. These categories of alternatives are:

- Establishment of differing compliance or reporting requirements or timetables that take into account the resources available to small entities;
- Clarification, consolidation, or simplification of compliance and reporting requirements under the rule for such small entities;
- Use of performance rather than design standards; and,
- Exemptions from coverage of the rule for small entities.

As noted earlier, NMFS considers all permit holders in this fishery to be small entities. In order to meet the objectives of this final rule, consistent with Magnuson-Stevens Act and the Endangered Species Act (ESA), NMFS cannot exempt small entities or change the reporting requirements only for small entities. Thus, there are no alternatives discussed that fall under the first and fourth categories described above. In addition, none of the alternatives considered would result in additional reporting or compliance requirements (category two above). NMFS does not know of any performance or design standards that would satisfy the aforementioned objectives of this rulemaking while, concurrently, complying with the Magnuson-Stevens Act.

NMFS considered five different alternatives (A1 - A5) in the final rule portion of this rulemaking for LCS quota and season length for the North and South Atlantic and provides justification for selection of the preferred alternative to achieve the desired objective.

The alternatives included: status quo (alternative A1), closing the South Atlantic region during the first trimester of 2007 and opening the entire South Atlantic region including the mid-Atlantic shark closed area in July 2007 pending available quota (alternative A2), opening the mid-Atlantic shark closed area on January 1, 2007, through July 31, 2007, dependant on available quota for LCS during the first and second trimester seasons of 2007 (alternative A3), modification of the percent of the annual baseline quota each region received based on recent harvest (alternative A4), and spreading the impacts of the current overharvest out over several years (alternative A5). Closing the South Atlantic region during the first trimester and opening the entire South Atlantic region including the mid-Atlantic shark closed area in July 2007 pending available quota is the preferred alternative (alternative A2).

Alternative A1 is the status quo alternative and would maintain existing procedures for addressing regional trimester over- and underharvests when establishing the regional quotas and seasons for the first trimester of 2007 and it would also maintain the existing mid-Atlantic shark closed area. Positive economic benefits may be realized in the North Atlantic regions because that region would be open, with ample quota, throughout the entire first trimester 2007. This alternative is not preferred, as it would result in negative economic impacts for the South Atlantic region and Gulf of Mexico region, compared to the preferred alternative.

In and of itself, alternative A1 does not create any new economic burdens on the shark commercial industry that was not included in previous rulemaking. Regardless, the unexpected magnitude of the 2006 first trimester overharvest would result in no commercial fishing for LCS in the entire South Atlantic region from January 1 to July 31, 2007, and there would be no fishing with bottom longline gear permitted in the mid-Atlantic shark closed area until August 1, 2007, per status quo. In addition, as a result of the revised landings numbers indicating a significant overharvest in the Gulf of Mexico, the Gulf of Mexico fishing season for the first trimester of 2007 will only be from January 1 to January 15, 2007.

If not for the overharvest in 2006, the first trimester quota available would have been 137.6 mt of LCS in the South Atlantic. Using a median ex-vessel price of $0.51 for LCS and $12.61 for shark fin reported in HMS Dealer reports from 2002 to 2005 for the South Atlantic region and adjusted for inflation, the value of this harvest would have been approximately $146,976 for LCS fresh (95 percent of the quota weight) and $191,266 for shark fins (based on the 5 percent shark fin to carcass regulation). Therefore, the 2006 overharvest is estimated to have an estimated direct revenue impact on South Atlantic regional commercial shark fishing activity of approximately $338,242. There will also be continued economic hardship compared to the preferred alternative for fishing operations using BLL gear that are dependant on LCS in the vicinity of the mid-Atlantic shark closed area since they would not be permitted to fish until August 1, 2007. Using the median ex-vessel prices for the first trimester of 2006 of $0.45 and $14.00 for LCS flesh and shark fins, respectively, the estimated revenue for the first trimester in 2006 from the 184.3 mt in overharvest was $625,902. However, a closure during the first trimester of 2007 would result in disrupted revenue flows and result in negative economic impacts. Maintaining the mid-Atlantic shark closed area would result in no fishing with bottom longline gear permitted in the mid-Atlantic shark closed area until August 1, 2007. This could impact some of the vessels dependant on fishing with BLL gear in this region.

If not for the overharvest in 2006 in the Gulf of Mexico, the first trimester quota available would have been 176.1 mt of LCS in the Gulf of Mexico. However, it is instead an adjusted quota of 62.3 mt of LCS. Using a median ex-vessel price of $0.43 for LCS and $16.56 for shark fin reported in HMS Dealer reports from 2002 to 2005 for the Gulf of Mexico region and adjusted for inflation, the value of this 113.8 mt reduction in the available quote for the first trimester of 2007 is approximately $102,487 for LCS fresh (95 percent of the quota weight) and $207,733 for shark fins (based on the 5 percent shark fin to carcass ratio required by regulation). Therefore, the 2006 overharvest is estimated to have an estimated direct revenue impact on Gulf of Mexico regional commercial shark fishing activity of approximately $310,220. Using the median ex-vessel prices for the first trimester of 2006 of $0.40 and $17.75 for LCS flesh and

shark fins, respectively, the estimated revenue for the first trimester in 2006 from the 113.8 mt in overharvest was $317,998. However, a closure during the first trimester of 2007 would result in disrupted revenue flows and result in negative economic impacts.

Overall, the economic impact of reduced 2007 LCS quota for both the South Atlantic and Gulf of Mexico regions would result in a total economic impact of $648,462 in reduced revenues. While those past excess revenues exceed the 2007 estimated reductions in revenues from LCS, it is still likely that fishing operations will face economic impacts due to dramatic cash flow reductions in 2007 and, potentially, beyond since it is likely that 2006 excess revenues were not retained by fishermen to offset future shortfalls since reductions in quota were likely unanticipated at the time. Some of these impacts might be mitigated somewhat for vessels that can fish in other regions or fisheries. However, these opportunities will likely be limited and result in additional costs associated with adjusting current fishing practices. The Agency received public comment indicating that quota reductions in the golden tilefish fishery will also impact participants fishing with bottom longline gear in the Cape Canaveral, FL, area as many of these fishermen depend on LCS and golden tilefish.

Alternative A2, the preferred alternative, which would close the entire South Atlantic region for LCS during the first trimester of 2007 and open the entire region including the mid-Atlantic shark closed area region in July 2007, pending availability of quota, could minimize the economic costs associated with the South Atlantic regional overharvest. As described above for Alternative A1, the 2006 overharvest is estimated to have a direct revenue impact on regional commercial shark fishing activity of approximately $338,242 for the South Atlantic and $310,220 for the Gulf of Mexico. In 2005, 46 vessels reported landings in the South Atlantic region, indicating that the LCS closure could result in a loss of revenue of approximately $7,353 per vessel. There were also 86 vessels reporting landings in the Gulf of Mexico, indicating that the LCS reduced quota in this region for the first trimester could result in a loss of revenues of approximately $3,607 per vessel. However, this alternative might provide an additional month of fishing opportunities for vessels that may not be able to participate in the South Atlantic regional fishery during the first six months of 2007. Compared to pre-closure landings (2002–2004), landings in 2005 of LCS decreased by 13.9 mt dw which may have been a result of the closed area. This additional month of access to the mid-Atlantic shark closed area during the month of July is estimated to potentially result in an additional $34,188 in gross shark revenues based on the difference in landings that may occur as a result of reopening the mid-Atlantic shark closed area.

Alternative A3 would open the mid-Atlantic shark closed area on January 1, 2007, through July 31, 2007, dependant on available quota for LCS during the first and second trimester seasons of 2007. Given the preliminary landings data as of November 13, 2006 (71 FR 66154), it is likely quota will not be available since the data indicate that extensive overharvests in the South Atlantic region would result in no available quota in that region. The impacts of this alternative would be similar to the preferred alternative or the status quo alternative as lack of available quota would prevent fishing in the South Atlantic region during the first trimester. In addition, updated landings data for LCS in the Gulf of Mexico region indicate that a transfer of LCS quota from the Gulf of Mexico region to the South Atlantic region is no longer a feasible option. This alternative is not preferred because the preferred alternative achieves similar objectives, yet ensures that the ecological benefits of maintaining the mid-Atlantic shark closed area are maintained through June 2007.

Alternatives (A4 and A5) were also considered. These two alternatives would have modified the percent of the annual baseline quota each region received based on recent harvest (A4) or would have spread the impacts of the current overharvest out over several years (A5). These two alternatives were not preferred given the data used for modifying the current regional allocation did not consider the overharvest (logbooks from 2006 are not available for analyses yet) and given the Agency's decision to amend shark management based on the results of the latest assessments (November 7, 2006; 71 FR 65086).

List of Subjects in 50 CFR Part 635

Fisheries, Fishing, Fishing vessels, Foreign relations, Imports, Penalties, Reporting and recordkeeping requirements, Treaties.

Dated: December 7, 2006.

William T. Hogarth,

Assistant Administrator for Fisheries, National Marine Fisheries Service.

■ For reasons set out in the preamble, 50 CFR part 635 is amended as follows:

PART 635—ATLANTIC HIGHLY MIGRATORY SPECIES

■ 1. The authority citation for part 635 continues to read as follows:

Authority: 16 U.S.C. *et seq.*; 16 U.S.C. 1801 *et seq.*

■ 2.In § 635.21, paragraph (d)(1) is revised to read asfollows:

§ 635.21 Gear operation and deployment restrictions.

* * * * *

(d) * * *

(1) If bottom longline gear is on board a vessel issued a permit under this part 635, persons on board that vessel may not fish or deploy any type of fishing gear in the mid-Atlantic shark closed area from January 1 through July 31 each calendar year, except that in 2007 the mid-Atlantic shark closed area will be closed from January 1 through June 30 and may open in July, contingent upon available quota.

* * * * *

[FR Doc. 06–9667 Filed 12–8–06; 2:52 pm]

BILLING CODE 3510–22–S

DEPARTMENT OF COMMERCE

National Oceanic and Atmospheric Administration

50 CFR Part 648

RIN 0648–AT60

[Docket No. 061020273–6321–02; I.D. 101606A]

Fisheries of the Northeastern United States; Summer Flounder, Scup, and Black Sea Bass Fisheries; 2007 Summer Flounder, Scup, and Black Sea Bass Specifications

AGENCY: National Marine Fisheries Service (NMFS), National Oceanic and Atmospheric Administration (NOAA), Commerce.

ACTION: Final rule.

SUMMARY: NMFS issues final specifications for the 2007 summer flounder, scup, and black sea bass fisheries. This final rule specifies allowed harvest limits for both commercial and recreational fisheries, including commercial scup possession limits. This action prohibits federally permitted commercial vessels from

landing summer flounder in Delaware in 2007 due to continued quota repayment from previous year's overages.

The actions of this final rule are necessary to comply with regulations of implementing the Summer Flounder, Scup, and Black Sea Bass Fishery Management Plan (FMP) as well as to ensure compliance with the Magnuson-Stevens Fishery Conservation and Management Act (Magnuson-Stevens Act).

The intent of this action is to establish harvest levels and other management measures to ensure that target fishing mortality rates (F) or exploitation rates, as specified for these species in the FMP, are not exceeded. In addition, this action implements measures that ensure continued rebuilding of the overfished scup stock and end overfishing in the summer flounder fishery.

DATES: Effective January 1, 2007, through December 31, 2007.

ADDRESSES: Copies of the specifications document, including the Environmental Assessment (EA), Regulatory Impact Review (RIR), the Initial Regulatory Flexibility Analysis (IRFA), and other supporting documents used by the Summer Flounder, Scup, and Black Sea Bass Monitoring Committees are available from Daniel Furlong, Executive Director, Mid-Atlantic Fishery Management Council, Room 2115, Federal Building, 300 South Street, Dover, DE 19901–6790. The specifications document is also accessible via the Internet at *http://www.nero.noaa.gov*. The Final Regulatory Flexibility Analysis (FRFA) consists of the IRFA, public comments and responses contained in this final rule, and the summary of impacts and alternatives contained in this final rule. Copies of the small entity compliance guide and the Supplemental Regulatory Impact Review Analysis are available from Patricia A. Kurkul, Regional Administrator, Northeast Region, National Marine Fisheries Service, One Blackburn Drive, Gloucester, MA 01930–2298.

FOR FURTHER INFORMATION CONTACT: Michael P. Ruccio, Fishery Policy Analyst, (978) 281–9104.

SUPPLEMENTARY INFORMATION:

Background

The summer flounder, scup, and black sea bass fisheries are managed cooperatively by the Atlantic States Marine Fisheries Commission (Commission) and the Mid-Atlantic Fishery Management Council (Council), in consultation with the New England and South Atlantic Fishery Management Councils.

The management units specified in the FMP include summer flounder (*Paralichthys dentatus*) in U.S. waters of the Atlantic Ocean from the southern border of NC northward to the U.S./Canada border, and scup (*Stenotomus chrysops*) and black sea bass (*Centropristis striata*) in U.S. waters of the Atlantic Ocean from 35°13.3′ N. lat. (the latitude of Cape Hatteras Lighthouse, Buxton, NC) northward to the U.S./Canada border. Implementing regulations for these fisheries are found at 50 CFR part 648, subpart A (general provisions), subpart G (summer flounder), subpart H (scup), and subpart I (black sea bass).

The regulations outline the process for specifying the annual catch limits for the summer flounder, scup, and black sea bass commercial and recreational fisheries, as well as other management measures (e.g., mesh requirements, minimum fish sizes, gear restrictions, possession restrictions, and area restrictions) for these fisheries. The measures are intended to achieve the annual targets set forth for each species in the FMP, specified either as an F or an exploitation rate (the proportion of fish available at the beginning of the year that may be removed by fishing during the year). Once the catch limits are established, they are divided into quotas based on formulas contained in the FMP. Detailed background information regarding the status of the summer flounder, scup, and black sea bass stocks and the development of the 2007 specifications for these fisheries was provided in the proposed specifications (71 FR 62972, October 27, 2006). That information is not repeated here.

NMFS will establish the 2007 recreational management measures for summer flounder, scup, and black sea bass by publishing a proposed and final rule in the **Federal Register** at a later date, following receipt of the Council's recommendations as specified in the FMP.

Summer Flounder

The FMP specifies a target F of F_{max}, that is, the level of fishing that produces maximum yield per recruit. The best available scientific information indicates that, for 2007, the Total Allowable Landings (TAL) must be set equal to $F_{rebuild}$ or the level of fishing mortality that will help ensure that the summer flounder stock is rebuilt by 2010. Therefore, for 2007, $F_{target} = F_{rebuild}$ at 0.15. This complies with the requirement at 50 CFR 648.100 that the agency implement measures (e.g., a TAL) necessary to ensure, with at least a 50–percent probability, that F_{max} will not be exceeded. This provision gives NMFS the ability to meet the statutory obligation under section 304 of the Magnuson-Stevens Act to rebuild the summer flounder stock to its target biomass within the statutory 10-year period.

The TAL associated with the target F is allocated 60 percent to the commercial sector and 40 percent to the recreational sector. The commercial quota is allocated to the coastal states based upon percentage shares specified in the FMP. The recreational harvest limit is specified on a coastwide basis. Recreational measures will be the subject of a separate rulemaking early in 2007.

This final rule implements the specifications contained in the October 27, 2006, proposed rule: A summer flounder TAL of 12.983 million lb (5,889 mt) for 2007. The TAL for 2007 is allocated 7,789,800 lb (3,533 mt) to the commercial sector and 5,193,200 lb (2,356 mt) to the recreational sector. This TAL is expected to have at least a 75–percent probability of achieving the target F of 0.15 in 2007, if the 2006 TAL and assumed discard levels are not exceeded, and is also expected to allow for rebuilding of the stock to the target biomass by 2010.

Four research projects that would utilize the full summer flounder research set-aside (RSA) of 389,490 lb (177 mt) have been conditionally approved by NMFS and are currently awaiting notice of award. If a project is not approved by the NOAA Grants Office, the research quota associated with the disapproved proposal will be restored to the summer flounder TAL through publication in the **Federal Register**.

Consistent with the revised quota setting procedures for the FMP found at 50 CFR 648.100(a)(1)(ii), summer flounder overages are determined based upon landings for the 2005 calendar year that were not accounted for in the 2006 final rule (70 FR 77060, December 29, 2005) and any current fishing year overages through October 31, 2006. Table 1 summarizes, for each state, the commercial summer flounder percent share, the 2007 commercial quota (both initial and less the RSA), the quota reductions from overages as described above, and the resulting final adjusted 2007 commercial quota.

TABLE 1. FINAL STATE-BY-STATE COMMERCIAL SUMMER FLOUNDER ALLOCATIONS FOR 2007

State	Percent Share	Initial Quota		Initial Quota, Less RSA		Quota Overages (through 10/31/06)[1]		Adjusted Quota less RSA[2]	
		lb	kg	lb	kg	lb	kg	lb	kg
ME	0.04756	3,705	1,681	3,594	1,630	0	0	3,594	1,630
NH	0.00046	36	16	35	16	0	0	35	16
MA	6.82046	531,300	240,998	515,361	233,768	30,046	13,629	485,315	220,139
RI	15.68298	1,221,673	554,151	1,185,023	537,526	0	0	1,185,023	537,526
CT	2.25708	175,822	79,753	170,547	77,360	16,470	7,471	154,077	69,889
NY	7.64599	595,685	270,203	577,815	262,097	156,038	70,779	421,777	191,318
NJ	16.72499	1,302,843	590,970	1,263,758	573,241	0	0	1,263,758	573,241
DE	0.01779	1,386	629	1,344	610	50,528	22,920	-49,184	-22,310
MD	2.03910	158,842	72,051	154,077	69,889	0	0	154,077	69,889
VA	21.31676	1,660,533	753,218	1,610,717	730,621	0	0	1,610,717	730,621
NC	27.44584	2,137,976	969,786	2,073,837	940,692	0	0	2,073,837	940,692
Total [3]	100.00	7,789,801	3,533,454	7,556,108	3,427,451	253,082	114,798	7,303,026	3,312,653

[1] 2006 quota overage is determined through comparison of landings for January through October 2006 plus any landings in 2005 in excess of the 2005 quota that were not previously addressed in the 2006 quota specifications, with the final 2006 quota for each state (70 FR 77060, December 29, 2006).
[2] Negative numbers indicate a state allocation in quota repayment status from previous year's overages.
[3] Total quota is the sum of all states having allocation. A state with a negative number has an allocation of zero (0). Kilograms are as converted from pounds and may not necessarily add due to rounding.

The Commission has established a system whereby 15 percent of each state's quota may be voluntarily set aside each year to enable vessels to land an incidental catch allowance after the directed fishery in a state has been closed. The intent of the incidental catch set-aside is to reduce discards by allowing fishermen to land summer flounder caught incidentally in other fisheries during the year, while ensuring that the state's overall quota is not exceeded. These Commission set-asides are not included in these 2007 final summer flounder specifications because NMFS does not have authority to establish such subcategories.

The Commission's Summer Flounder, Scup, and Black Sea Bass Management Board (Board) did not adopt a 2007 summer flounder TAL recommendation at their joint meeting with the Council in October 2006, leaving the TAL for state waters undecided. The Board is scheduled to take action on recommending a 2007 TAL on December 10, 2006. There is insufficient time for NMFS to wait until after the Board's decision to submit documents to the **Federal Register** and still publish specifications no later than the Court-mandated January 1 deadline. While it is possible that the Board will adopt the TAL implemented by this rule, it is also possible that the Board will adopt a higher TAL, resulting in to inconsistent 2007 summer flounder TALs for state and Federal waters.

Should the Board adopt a TAL higher than 12.983 million lb (5,889 mt) for 2007, NMFS would be required to take immediate action and suspend the specifications contained in this final rule by utilizing an interim or emergency action in the **Federal Register** to implement alternative measures that ensure that overfishing does not occur in 2007, and that the rebuilding schedule is not compromised by the dual-TAL situation in 2007. These measures may consist of, but are not limited to, the following:

- A complete closure of the commercial and recreational summer flounder fisheries in Federal waters (i.e., the Exclusive Economic Zone (EEZ)) in 2007. Possession of summer flounder by federally permitted vessels in the commercial or recreational for-hire fisheries would not be permitted.
- No summer flounder RSA would be authorized for 2007.
- Commercial landings in states that exceed their percentage allocation of the 7.79–million lb (3,534–mt) quota, which is 60 percent of the 12.983–million-lb (5,889–mt) TAL, from state water commercial landings constitute and overage; these states would be in quota repayment status for 2008 and subsequent years, as needed.
- Conservation equivalency in the recreational fishery would not be approved for 2007 and possibly for subsequent years.

If the Board adopts the 12.983–million-lb (5,889–mt) TAL, then no additional action by NMFS will be necessary to ensure that the 2007 F-target is attained for the 2007 summer flounder fishery.

Delaware Summer Flounder Closure

Table 1 indicates that, for Delaware, the amount of the 2006 summer flounder quota overage (inclusive of overharvest from previous years) is greater than the amount of commercial quota allocated to Delaware for 2007. As a result, there is no quota available for 2007 in Delaware. The regulations at § 648.4(b) provide that Federal permit holders, as a condition of their permit, must not land summer flounder in any state that the Regional Administrator has determined no longer has commercial quota available for harvest. Therefore, effective January 1, 2007, landings of summer flounder in Delaware by vessels holding commercial Federal summer flounder fisheries permits are prohibited for the 2007 calendar year, unless additional quota becomes available through a quota

transfer and is announced in the **Federal Register**. Federally permitted dealers are advised that they may not purchase summer flounder from federally permitted vessels that land in Delaware for the 2007 calendar year, unless additional quota becomes available through a transfer.

Scup

This final rule implements the specifications contained in the November 27, 2006, proposed rule: A 13.97–million-lb (6,337–mt) scup TAC and a 12.0–million-lb (5,443–mt) scup TAL. The FMP specifies that the Total Allowable Catch (TAC) associated with a given exploitation rate be allocated 78 percent to the commercial sector and 22 percent to the recreational sector. Scup discard estimates are deducted from both sectors' TACs to establish TALs for each sector, i.e., TAC minus discards equals TAL. The commercial TAC, discards, and TAL (commercial quota) are then allocated on a percentage basis to three quota periods, as specified in the FMP: Winter I (January-April)--45.11 percent; Summer (May-October)--38.95 percent; and Winter II (November-December)--15.94 percent. The recreational harvest limit is allocated on a coastwide basis. Recreational measures will be the subject of a separate rulemaking early in 2007.

After deducting 360,000 lb (163 mt) of RSA for the approved research projects, the TAL is divided into a commercial quota of 8,895,800 lb (4,035 mt) and a recreational harvest limit of 2,744,200 lb (1,245 mt). If a project is not approved by the NOAA Grants Office, the research quota associated with the disapproved proposal will be restored to the scup TAL through publication in the **Federal Register**.

Consistent with the revised quota setting procedures established for the FMP at 50 CFR 648.120(d)(4)(i), scup overages are determined based upon landings for the Winter I and Summer 2006 periods plus any previously unaccounted for landings from the 2005 calendar year. Table 2 presents the final 2006 commercial scup quota for each period and the reported landings for the 2006 Winter I and Summer periods; there was no overage of the Winter I or Summer quota. In addition, there were no outstanding overages from the 2005 calendar year that were not included in the 2006 final rule (70 FR 77060, December 29, 2005). Therefore, no overage deduction adjustments are required to be made to the 2007 quota as part of this action. After June 30, 2007, NMFS will determine any overages that occur during the Winter II 2006 period. Any quota adjustments to the 2007 Winter II allocation determined to be necessary will be announced in the **Federal Register** in July 2007.

TABLE 2. SCUP PRELIMINARY 2006 LANDINGS BY QUOTA PERIOD

Quota Period	2006 Quota		Reported 2006 landings through 10/31/2006		Quota Overages as of 10/31/2006	
	lb	kg	lb	kg	lb	kg
Winter I	5,382,589	2,441,542	3,557,859	1,613,845	0	0
Summer	4,647,569	2,108,137	3,050,422	1,383,671	0	0
Winter II	1,901,983	862,739	N/A	N/A	N/A	N/A
Total	11,932,141	5,412,419	6,608,281	2,997,516	N/A	N/A

N/A = Not Applicable.

Table 3 presents the commercial scup percent share, 2007 TAC,projected discards, 2007 initial quota (with and without the RSAdeduction), and initial possession limits, by quota period. Toachieve the commercial quotas, this final rule implements aWinter I period (January-April) per-trip possession limit of30,000 lb (13.6 mt), and a Winter II period (November-December)initial per-trip possession limit of 2,000 lb (907 kg). TheWinter I per-trip possession limit will be reduced to 1,000 lb(454 kg) when 80 percent of the commercial quota allocated tothat period is projected to be harvested.

TABLE 3. INITIAL COMMERCIAL SCUP QUOTA ALLOCATIONS FOR 2007 BY QUOTA PERIOD

Quota Period	Percent Share	Total Allowable Catch		Discards		Initial Quota		Initial Quota less RSA		Possession Limits (Per Trip) [1]	
		lb	mt	lb	mt	lb	mt	lb	mt	lb	mt
Winter I	45.11	4,915,456	2,230	775,892	352	4,139,564	1,878	4,012,895	1,820	30,000	13,608
Summer	38.95	4,244,226	1,925	669,940	304	3,574,286	1,621	3,464,914	1,572	N/A	N/A
Winter II	15.94	1,736,918	788	274,168	124	1,462,750	664	1,417,991	643	2,000	907
Total	100.00	10,896,600	4,943	1,720,000	780	9,176,600	4,163	8,895,800	4,035	N/A	N/A

[1] The Winter I possession limit will drop to 1,000 lb (454 kg) upon attainment of 80 percent of that period's allocation. The Winter II possession limit may be adjusted (in association with a transfer of unused Winter I quota to the Winter II period) via notification in the Federal Register.
[2] Metric tons are as converted from pound and may not necessarily add due to rounding.
N/A = Not applicable.

Consistent with the unused Winter I commercial scup quota rollover provisions at 50 CFR 648.120(a)(3), this final rule will maintain the Winter II possession limit-to-rollover amount ratios that had been in place for the

2006 fishing year, as shown in Table 4. The Winter II possession limit will increase by 1,500 lb (680 kg) for each 500,000 lb (227 mt) of unused Winter I period quota transferred, up to maximum of a 8,000 lb (3,629 kg).

TABLE 4. POTENTIAL INCREASE IN WINTER II POSSESSION LIMITS BASED ON THE AMOUNT OF SCUP ROLLED OVER FROM WINTER I TO WINTER II PERIOD

Initial Winter II Possession Limit		Rollover from Winter I to Winter II		Increase in Initial Winter II Possession Limit		Final Winter II Possession Limit after Rollover from Winter I to Winter II	
lb	kg	lb	kg	lb	kg	lb	kg
2,000	907	0-499,999	0-227	0	0	2,000	907
2,000	907	500,000-999,999	227-454	1,500	680	3,500	1,588
2,000	907	1,000,000-1,499,999	454-680	3,000	1,361	5,000	2,268
2,000	907	1,500,000-1,999,999	680-907	4,500	2,041	6,500	2,948
2,000	907	2,000,000-2,500,000	907-1,134	6,000	2,722	8,000	3,629

Black Sea Bass

The FMP specifies that the TAL is allocated 49 percent to the commercial sector and 51 percent to the recreational sector. The recreational harvest limit is allocated on a coastwide basis. Recreational measures will be the subject of a separate rulemaking early in 2007.

This final rule implements the specifications contained in the October 27, 2006, proposed rule: A 5.0–million lb (2,270–mt) black sea bass TAL. After deducting 150,000 lb (68 mt) of RSA for the approved research projects, the TAL is divided into a commercial quota of 2,376,500 lb (1,078 mt) and a recreational harvest limit of 2,473,500 lb (1,122 mt). If a project is not approved by the NOAA Grants Office, the research quota associated with the disapproved proposal will be restored to the black sea bass TAL through publication in the **Federal Register**.

Consistent with the revised quota setting procedures for the FMP, black sea bass overages are determined based upon landings for the 2005 calendar year that were not accounted for in the 2006 final rule (70 FR 77060, December 29, 2005) and any current fishing year overages through September 30, 2006. As there were no overages from either period, no overage deduction adjustment to the 2007 commercial quota is necessary.

Comments and Responses

NMFS received 83 written comments during the 21-day comment period for the October 27, 2006, proposed rule. Comments were received from the following groups or individuals: Two U.S. Senators from New Jersey; four U.S. Representatives to Congress from New Jersey, two from New York, and one from Pennsylvania; the director of a New Jersey commercial fishing association; the Commission's Summer Flounder, Scup, and Black Sea Bass Management Board Chairman; the Council chairman; four conservation group representatives; the director and 56 individual members of a recreational fishing association; 12 members of a coastal New Jersey town chamber of commerce; a Rhode Island recreational angler association; the manager of a wholesale fish company; and six members of the public. Some parties submitted different comments on more than one occasion. Only comments that were applicable to the proposed 2007 specifications, including the analyses used to support these specifications, are addressed in this preamble. Significant issues and concerns raised by commenters are summarized below and responded to as follows.

Summer Flounder Comments

Total Allowable Landings for 2007

Comment 1: The majority of comments received urged NMFS to adopt the Council's preferred alternative TAL of 19.9 million lb (9,026 mt). Specifically, some commenters stated that the 19.9–million-lb (9,026–mt) TAL complies with the 50–percent probability of achieving the target F rate (F_{max}) in the FMP, some stated that the higher TAL meets the National Standards contained in the Magnuson-Stevens Act, continues rebuilding, and many stated that, by nature of being less restrictive than the 12.983–million-lb (5,889–mt) TAL implemented by this final rule, will have less of an impact on fishery participants and coastal communities than the TAL proposed by NMFS.

Response: The Council recommended TAL of 19.9 million lb (9,206 mt) is an amount that was projected in the most recent stock assessment update in June 2006 to have a 50–percent probability of not exceeding F_{max} (0.28). However, the peer-reviewed Summer Flounder Assessment and Biological Reference Point Update that has been used as the basis for the TAL NMFS is implementing through this rule indicates that fishing at the level proposed by the Council would not result in achieving the rebuilding biomass target until after 2022, 12 years after the end of the rebuilding period, even though the single year (2007) F target may not be exceeded. NMFS considers the results of the Reference Point update the best available scientific information (see responses to Comments 7,8, and 9).

Fishing at a TAL that has only a 50–percent probability that Fmax will not be exceeded in 2007 will not rebuild the fishery by the end of the rebuilding period. NMFS has the obligation under the Magnuson–Stevens Act to set annual quotas for summer flounder that rebuild the stock by January 1, 2010.

As such, NMFS is implementing a more conservative 12.983–million-lb (5,889–mt) TAL based on the best science available, as specified in the updated assessment. This TAL has a 75–percent probability of not exceeding the Frebuild (F=0.15) level in 2007. This is necessary to ensure that rebuilding of summer flounder occurs by January 1, 2010.

Impact on summer flounder fishery participants and coastal communities are addressed under Comment 10.

Comment 2: One group of commenters requested that NMFS implement a 14.156–million lb (6,421–mt) TAL in 2007.

Response: Under the updated assessment for 2006, a TAL of 14.156 million lb (6,421 mt) is associated with a 50–percent probability of not

exceeding the F target ($F_{rebuild}$=0.15) for 2007. The Peer Review Panel convened for re-examination of the biological reference points recommended that fishing at a TAL that has only a 50–percent probability that Fmax will not be exceeded in 2007 will not rebuild the fishery by the end of the rebuilding period. The updated assessment indicated that a 14.156–million-lb (6,421–mt) TAL in 2007 would fall short of the rebuild goal. In addition, the Peer Review Panel recommended that the retrospective pattern that has resulted in underestimated F's in past years be taken into account when setting the 2007 TAL. To do so, NMFS must set annual quotas for summer flounder that are based on much lower annual rates of removal than those of the past few years to rebuild the stock by January 1, 2010, as required by the Magnuson-Stevens Act. Therefore, NMFS is implementing a more conservative 12.983–million lb (5,889–mt) TAL that has a 75–percent probability of not exceeding the fishing mortality level ($F_{rebuild}$= 0.15) in 2007. Achieving this fishing mortality level in 2007 is necessary to provide for rebuilding of the summer flounder stock by January 1, 2010. See response to Comment 1 for details.

Comment 3: One commenter requested that NMFS implement a TAL in the range of 40.0 to 44.0 million lb (18,144 to 19,958 mt).

Response: NMFS cannot implement a TAL that has less than 50–percent probability of achieving the Fmax in 2007 and that would not rebuild the stock by 2010. A TAL in the range of 40.0 to 44.0 million lb (18,144 to 19,958 mt) does not meet the required probability of attaining the F_{max}, would not rebuild the stock by 2010, and, therefore, cannot be implemented by NMFS.

Rebuilding

Comment 4: Many commenters questioned the need to rebuild fully the summer flounder stock within a 10-year period ending January 1, 2010. Specific commenters urged NMFS to utilize administrative discretion or to exercise flexibility and to extend the rebuilding period by 2 or 3 years to avoid disproportionate economic impacts resulting from the reduced summer flounder TAL. Other commenters stated that the 10-year rebuilding period has no scientific or rational basis and should not be imposed on the summer flounder fishery.

Response: The Magnuson-Stevens Act stipulates that an FMP must, for any fishery that is overfished, rebuild the fishery in as short a time as possible, not to exceed 10 years, except in three narrowly defined circumstances (where (1) the biology of the stock, (2) other environmental conditions, or (3) management measures under an international agreement in which the United States participates dictate otherwise.) Based on the results of all recent stock assessments and peer reviews, there is no information to suggest that either the biology of the stock or prevailing environmental conditions would prevent the summer flounder stock from rebuilding within the required timeframe; also, there are no international agreements to which the United States is a participant that are related to the management of summer flounder. Therefore, none of the exceptions to the 10–year rebuilding timeframe provided in the Magnuson–Stevens Act are applicable to current conditions for the summer flounder stock, and NMFS is not authorized to extend the rebuliding period beyond the 10–year statutory limitation. The response to Comment 10 addresses the socioeconomic impacts of the summer flounder TAL implemented by this rule.

Comment 5: The conservation organization representatives also expressed concern that rigid adherence to the 10-year rebuilding period mandated by the Magnuson-Stevens Act may have negative impacts on the reauthorization of the Magnuson-Stevens Act.

Response: NMFS continues to support a strong Magnuson-Stevens Act and looks forward to working with the Congress and constituents during the reauthorization process. However, NMFS is bound to comply with the existing provisions of the Magnuson-Stevens Act.

Comment 6: The majority of comments received on summer flounder stated that the stock has responded favorably to rebuilding efforts and that the recent plateau in stock size is a function of the stock having reached the maximum level attainable under current environmental and ecological conditions. Many of these commenters stated that they believe the stock to be rebuilt at its current level or that it can never attain the target rebuilding level, particularly within the required 10-year period.

Response: Peer-reviewed information utilized for setting the 2007 TAL indicates that the summer flounder stock is rebuilding but is not yet rebuilt. The current stock levels are only slightly above the current biomass threshold ($\frac{1}{2}B_{msy}$) which is half of the rebuilt level. None of the peer-reviewed science indicates that the rebuilding target cannot be attained within the 10-year rebuilding period or that the biomass target is incorrect.

Use of Best Available Science

Comment 7: Several commenters stated that NMFS is not using the best scientific information in setting the 2007 summer flounder TAL, including the modeling approach used.

Response: The information used to set the summer flounder TAL is the best scientific information available, consistent with National Standard 2 of the Magnuson-Stevens Act. The information used in TAL setting, including the model and methods applied to it, have undergone substantial peer review in recent years. While recommendations have been made to develop additional modeling approaches, peer reviews have confirmed the current model and modeling approaches to be statistically valid for the annual stock assessment updates that provide the foundation for establishing the TAL.

Comment 8: The conservation organization representatives requested that an outside, independent review of the summer flounder stock assessment occur before the 2008 TAL is set. They also requested that this review include an examination of alternative model structures, the management implications of retrospective patterns, and an assessment of ecosystem impacts that may be affecting summer flounder.

Response: The summer flounder stock assessment has been independently reviewed by scientists from outside NMFS twice in the rebuilding period: In 2002 as part of Stock Assessment Review Committee (SARC) 35 and again in 2005 during SARC 41. The NMFS Office of Science and Technology convened an additional review of the biological reference points for the summer flounder stock to ensure that the 2007 quota for the fishery is based on the best possible scientific information available. The review panelists selected were scientists with recognized stock assessment expertise who have not specifically been involved in past summer flounder assessments: Two from the NMFS Northwest Region and one from Louisiana State University. The peer review panel recommended several adjustments in the assessment, and these were incorporated into the analysis that stemmed from the peer review.

NMFS is seeking to mitigate the retrospective patterns regarding fishing mortality by implementing a more conservative TAL for 2007, to ensure that the necessary F's are actually achieved.

The next full summer flounder stock assessment is scheduled for June 2008. The subcommittee meeting in which the assessment is conducted is an open meeting, and NMFS encourages the commenters to participate and present relevant data and analyses at the meeting.

Comment 9: Several commenters stated that the TALs authorized by NMFS for the first 7 years of the rebuilding period were set at incorrect levels. These commenters stated that TALs had been set too high, were overly optimistic, were routinely exceeded (i.e., as indicated by the retrospective analysis of F) and did not adequately compensate year to year to ensure timely rebuilding of the summer flounder stock.

Response: For each year during the rebuilding period, NMFS set the summer flounder TAL based on the best scientific information available, consistent with National Standard 2 of the Magnuson-Stevens Act. The information for setting the annual TAL is provided through the stock assessment update. In some years, additional levels of review are conducted. In 2002 and 2005, this included an external peer review of the stock assessment vetted through independent stock assessment scientists provided by the Center for Independent Experts (CIE) and reported on through the Center's Stock Assessment Workshop (SAW) and SARC process (35th and 41st, SARCs, respectively). For 2007, the annual stock assessment is accompanied by a peer reviewed Summer Flounder Assessment and Biological Reference Point Update.

The regulations state that the Council shall recommend, and NMFS shall implement, measures (including the TAL) necessary to ensure, with at least a 50–percent probability of success, that the applicable specified F will not be exceeded. This requirement is also consistent with a 2000 Federal Court Order (*Natural Resources Defense Council* v. *Daley*, Civil No. 1:99 CV 00221 (JLG)) regarding the setting of the summer flounder TAL. Through the course of the rebuilding period, NMFS has set TALs estimated to have at least a 50–percent probability of not exceeding F_{max}. NMFS is also required to ensure, under the Magnuson-Stevens Act, that the summer flounder stock is rebuilt within 10 years.

In the first 4 years of the rebuilding period, 2000–2004, the summer flounder stock was rebuilding at a rate that appeared likely to achieve the rebuilding target by 2009. During 2004, the Council provided, at NMFS's request, a rebuilding trajectory so that TALs could be recommended that would ensure that rebuilding continued, as needed, to the eventual target by 2009. These projections indicated that setting TALs with an F_{max} at the 75–percent probability level, rather than the 50–percent probability level, would rebuild the stock within the 10-year time frame. Based on this information, the Council recommended, and NMFS implemented, TALs of 30.3 million lb (13,744 mt) for 2005 and 33.0 million lb (14,969 mt) for 2006, consistent with the precautionary 75–percent probability of achieving the F target (F_{max}).

In 2005, new information on the retrospective pattern that underestimated previous years' F and revised reference points associated with a new stock assessment indicated that the 33.0–million-lb (13,744–mt) TAL set for 2006 during 2004 would need to be lowered to 23.59 million lb (10,700 mt) to achieve even a 50–percent probability of achieving the F target. The Council recommended a constant harvest TAL of 26.0 million lb (11,794 mt) for 2006–2008 that would average a 50–percent probability of achieving the target F for the 3-year period but that would not achieve the necessary target in 2006. NMFS implemented the 23.59–million-lb (10,700–mt) TAL to ensure that the mortality objective met the regulatory requirement of at least a 50–percent probability of attaining the F target in 2006. Doing so was controversial and many of the above listed commenters also responded to the 2006 specification proposed rule, asking NMFS not to implement the more conservative TAL of 23.59 million lb (10,700 mt).

Annual stock assessment updates to information used in previous year's TAL setting continue to illustrate that fishing mortality has been underestimated in previous years, while stock size and recruitment has been overestimated. Now, in light of the best science available and considering the retrospective patterns of F, stock size, and recruitment, it is clear that fishing at a TAL that has only a 50–percent probability that F_{max} will not be exceeded in 2007 will not rebuild the fishery by the end of the rebuilding period. Therefore, NMFS is implementing a more conservative 12.983–million lb (5,889–mt) TAL that has a 75–percent probability of not exceeding the fishing mortality level ($F_{rebuild}$= 0.15) in 2007. Achieving this fishing mortality level in 2007 is necessary to provide for rebuilding of the summer flounder stock by January 1, 2010.

Negative Socio-economic Impacts of a Reduced TAL

Comment 10: The majority of those commenting on summer flounder spoke about negative impacts associated with the reduction in TAL for 2007. Comments suggested that the 45–percent reduction in TAL from 2006 to 2007 would have severe economic impacts to charter, for hire, head boat, and commercial fishing vessels, and would have substantial impacts to fishing-related support industries ranging from bait shops to ocean-front hotels. Some commenters stated that the magnitude of the negative impacts would be higher than outlined in the EA/RIR/IRFA.

Response: Impacts of the 12.983–million lb (5,889–mt) TAL have been fully analyzed in the EA/RIR/IRFA published in the proposed rule (71 FR 62972, October 27, 2006). These analyses are based on the best information available and the details of the EA/RIR/IRFA are not repeated here in their entirety.

NMFS recognizes that substantial socioeconomic impacts are associated with the implementation of the 2007 TAL. NMFS has statutory and regulatory obligations to set annual harvest levels that, based on the best information available, will have at least a 50–percent probability of not exceed the annual fishing mortality level target and that will ensure that the summer flounder stock will be rebuilt within the specified time frame. As previously stated in the response to Comment 1, NMFS has selected a conservative TAL that has a 75–percent probability of attaining the level needed ($F_{rebuild}$) in 2007 to ensure rebuilding by January 1, 2010, in order to comply with the mandates of the Magnuson-Stevens Act. Although this final rule will not directly affect support industries as these entities do not hold Federal permits and are, therefore, not directly regulated, potential reductions in fishing effort and associated expenditures may have indirect impacts on hotels, restaurants, gear and bait shops, and other associated businesses. Sufficient data are not available to enumerate or characterize the impacts on these businesses.

Scup Comments

Comment 11: Two commenters wrote in support of the Council and Board recommended TAL of 16.0 million lb (7,257 mt) for 2007. One of these commenters stated that the 16.0–million lb (7,257–mt) TAL is sufficiently risk-averse and a substantial reduction from the 31.12–million lb (14,116–mt) TAL that was calculated to achieve the

targeted exploitation rate of 21 percent in 2007.

Response: Scup is considered overfished and the Council is currently developing Amendment 14 to the FMP to implement a scup rebuilding plan. Spring survey indices values have fallen below the biomass threshold, which is utilized for long-term potential catch projections. NMFS is implementing a risk-averse 12.0–million lb (5,443–mt) TAL for 2007, given the current overfished status for scup, poor 2004 and 2005 year classes, and continued uncertainty associated with the survey indices. The NMFS implemented TAL value falls within the range of yields expected at about ½ B_{msy} (11–16.5 million lb (4,990–7,484 mt)) based on the long-term potential catch, and would constrain harvest to the level of actual landings in 2005. The Scup Monitoring Committee and Council staff agreed with this approach.

Comment 12: One commenter stated that reduced values from the spring survey were not a compelling reason to implement a decreased TAL for 2007.

Response: NMFS utilized several factors in the decision to implement a more risk-averse TAL for 2007, including, but not limited to, the reduced spring survey indices values. Scup is currently overfished and the Council is developing a formal rebuilding plan to be implemented through Amendment 14 to the FMP. The response to Comment 11 outlines the information used as NMFS's justification for implementing a more risk-averse TAL for 2007.

Comment 13: One commenter stated that a more precautionary approach should be utilized in setting the 2007 scup TAL. This commenter also stated that scup management requires a significant overhaul and a rebuilding plan is long overdue.

Response: NMFS is implementing a TAL that is at the lower end of the range of yields expected at about ½B_{msy} (11–16.5 million lb (4,990–7,484 mt)). A further reduction does not appear to be warranted at this time. The Council is currently developing Amendment 14 to the FMP to address scup rebuilding.

Comment 14: One commenter stated that the reduced quota will result in the loss of recently re-established markets for scup, particularly the fresh fish market.

Response: NMFS is required to implement a TAL for 2007 that will contribute to the rebuilding of the scup stock. NMFS has selected a 12.0–million lb (5,443–mt) TAL for the reasons outlined in the response to Comment 11 (above) to meet that end. The 2007 TAL is consistent with the level of landings that occurred in 2005 and NMFS considers it unlikely to result in a loss of established markets for scup.

Black Sea Bass Comments

Comment 15: Three commenters relayed general opposition to the 2007 black sea bass TAL being implemented by NMFS, stating that disruption of black sea bass supply will result in market niches being filled by other fish and/or imports and ultimately lost.

Response: NMFS is implementing a 2007 black sea bass TAL that is a 37.5–percent decrease from 2006. NMFS is implementing a more risk-averse TAL for 2007 in light of the most recent biomass indices, the uncertainty in the stock status determination criteria, and to ensure continued rebuilding to the end of the rebuilding period that ends in 2009. The 2007 TAL is consistent with the level of landings that occurred in 2005 and NMFS considers it unlikely to result in a loss of established markets for black sea bass.

NMFS recognizes that socio-economic impacts may be associated with the implementation of the 2007 black sea bass TAL. These impacts may include industries that are involved with with the supply, purchase, distribution, and sale of black sea bass for consumption. NMFS has regulatory and statutory obligations to set annual harvest levels that, based on the best scientific information available, will not exceed recommended fishing mortality levels and that will ensure that the black sea bass stock will be rebuilt within the specified time frame, thus providing for long-term sustainable yields. The 2007 TAL meets the fishing mortality objectives and has a high probability of ensuring continued rebuilding.

Comment 16: One commenter stated that trawl surveys are an unreliable method for surveying black sea bass.

Response: The 43rd SAW, held in July 2006, included black sea bass. The Southern Demersal Working Group concluded that the data available, including trawl survey information, were adequate to perform a stock assessment for black sea bass. The SARC–43 panel utilized length data incorporating growth information, landings estimates, fishery length frequencies, and survey length frequencies to get preliminary estimates of biomass and fishing mortality rates. The SARC–43 panel did not endorse using the existing biomass reference point (the 3-year average weight per tow of black sea bass (>22 cm) in the Center spring trawl) as a basis for management. NMFS has encouraged the Council to develop replacement stock status determination criteria that are scientifically supportable and that can be relied on to measure stock rebuilding. The Council may consider additional data sources beyond trawl data when developing the criteria.

Comment 17: One commenter stated that the black sea bass rebuilding period should be liberalized to a 20-year time frame.

Response: The required time frame for stock rebuilding under the Magnuson-Stevens Act is outlined in response to Comment 4, and is not repeated here.

Research Set-Aside Comments

Comment 18: Two comments were received regarding the 2007 RSA program. One supported up to 3 percent for the 2007 TALs being set aside for research; one opposed the RSA program in its entirety.

Response: NMFS continues to support the RSA program as a useful means of acquiring information necessary to assess and manage the fisheries.

Classification

The Assistant Administrator for Fisheries, NOAA, finds good cause under 5 U.S.C. 553(d)(3) to waive the 30-day delayed effectiveness period for this rule. This action establishes annual quotas for the summer flounder, scup, and black sea bass fisheries and possession limits for the commercial scup fishery. Preparation of the proposed rule was dependent on the submission of the final EA/RIR/IRFA by the Council and on the submission of a supplemental economic analysis by the Northeast Fisheries Science Center (Center), both of which occurred in October 2006, in order for the agency to provide the public with information from the environmental and economic analyses as required in rulemaking. NMFS published the proposed rule on October 27, 2006, with a 21-day comment period, in order to allow for finalization of the proposed specifications by January 1, 2007. NMFS was unable to obtain the necessary data from the Council and Center before October 2006, to finalize the specifications. Publication of the adjusted summer flounder quota at the start of the fishing year is required by the order of Judge Robert Doumar in *North Carolina Fisheries Association* v. *Daley*.

If implementation of the specifications is delayed until beyond January 1, 2007, NMFS will be prevented from carrying out its legal obligation to prevent overfishing of these three species. If a 30-day delay in effectiveness were to be required, the lack of effective quota specifications would prevent NMFS from closing the

fishery should landings exceed the quotas. The summer flounder, scup, and black sea bass fisheries are all expected to be active at the start of the fishing season in 2007. In addition, the Delaware summer flounder fishery would be open for fishing but in a negative quota situation. All of these factors would result in large overages that would have distributional effects on other quota periods and could disadvantage some gear sectors.

This final rule has been determined to be not significant for purposes of Executive Order 12866.

Included in this final rule is the FRFA prepared pursuant to 5 U.S.C. 604(a). The FRFA incorporates the IRFA, a summary of the significant issues raised by the public comments in response to the IRFA, NMFS's responses to those comments, and a summary of the analyses completed to support the action. A copy of the EA/RIR/IRFA is available from the Council (see **ADDRESSES**).

The preamble to the proposed rule included a detailed summary of the analyses contained in the IRFA, and that discussion is not repeated here.

Final Regulatory Flexibility Analysis

Statement of Objective and Need

A description of the reasons why this action is being taken, and the objectives of and legal basis for these specifications are explained in the preambles to the proposed rule and this final rule and are not repeated here.

Summary of Significant Issues Raised in Public Comments

Several of the comment letters received on the proposed specifications specifically opposed the reductions to the TALs for summer flounder, scup, and black sea bass. Many of the comments addressed the potential economic impact of reduction of the summer flounder TAL on the recreational fishing industry, particularly in New York and New Jersey. Although consideration of the reduced TALs was given, no changes were made in the final rule as a result of these comments. For a summary of the comments received, and the responses thereto, refer to the ''Comments and Responses'' section of this preamble.

Description and Estimate of Number of Small Entities to Which the Rule will Apply

The categories of small entities likely to be affected by this action include commercial and charter/party vessel owners holding an active Federal permit for summer flounder, scup, or black sea bass, as well as owners of vessels that fish for any of these species in state waters. The Council estimates that the 2007 quotas could affect 2,242 vessels that held a Federal summer flounder, scup, and/or black sea bass permit in 2005. However, the more immediate impact of this final rule will likely be felt by the 906 vessels that actively participated (i.e., landed these species) in these fisheries in 2005.

Description of Projected Reporting, Recordkeeping, and Other Compliance Requirements

No additional reporting, recordkeeping, or other compliance requirements are included in this final rule.

Description of the Steps Taken to Minimize Economic Impact on Small Entities

Specification of commercial quotas and possession limits is constrained by the conservation objectives set forth in the FMP and implemented at 50 CFR part 648 under the authority of the Magnuson-Stevens Act. Economic impacts of reduced quota specifications, that reduce the number of fish that may be taken by participants of both commercial and recreational fisheries, may be offset by adjustments to such things as commercial fish sizes, changes to mesh size, gear restrictions, or possession and trip limits that may increase efficiency or value of the fishery. This action contains no adjustments to such measures. Therefore, the economic impact analysis of the action is evaluated solely on the different levels of quota specified in the alternatives. The ability of NMFS to minimize economic impacts for this action is constrained to approving quota levels that provide for the maximum availability of fish while still meeting the required objectives of the FMP, its implementing regulations, and the Magnuson-Stevens Act.

The economic analysis for the 2007 specifications assessed the impacts of five of the six management alternatives. Council staff provided analysis for Alternatives 1, 2, and 3, while the Center provided analysis for Alternatives 5 and 6. The no action alternative, designated as Alternative 4, was excluded from analysis because it is not consistent with the goals and objectives of the FMP and the Magnuson-Stevens Act. Implementation of the no action alternative would substantially complicate the approved management program for these fisheries, and would very likely result in overfishing of the resources.

Alternatives 1 (Council preferred), 3 (status quo), and 5 (NMFS analyzed) all have an economic impact that is less than or equal to the alternative implemented by this rule, depending on the specific species examined. These three alternatives were evaluated by NMFS as outlined below:

Alternative 3 (status quo) would provide for the maximum amount of landings within the range of alternatives and would produce the smallest impact on small entities. However, Alternative 3 would likely result in the biological targets (i.e., fishing mortality and exploitation rates) specified in the FMP being exceeded. Alternative 3 is inconsistent with the goals and objectives of the FMP and the Magnuson-Stevens Act.

Alternative 1 (Council preferred), the second least restrictive alternative with the second smallest impact to small entities, would also provide for landing levels that could not be implemented. Alternative 1 is not sufficiently risk-averse for summer flounder, and fishing mortality would likely exceed the biological targets specified in the FMP, resulting in continued overfishing. In addition, Alternative 1 did not adequately address concerns raised by Council staff and the Monitoring Committee regarding the scup and black sea bass biological targets and status of these stocks.

Alternative 5 (NMFS analyzed) is more restrictive for summer flounder than Alternatives 1 or 3, but is equal to the most restrictive alternatives for scup and black sea bass. The measures contained in Alternative 5 were not selected because they were not sufficiently risk-averse for the required rebuilding of the summer flounder stock.

Alternative 2 is the most restrictive alternative for summer flounder and equal to the most restrictive alternatives for scup and black sea bass. Accordingly, Alternative 2 is associated with the highest economic impact to small entities, particularly for summer flounder. This alternative would meet all the objectives of the FMP and satisfy the requirements of the Magnuson-Stevens Act for all three species. This alternative was not selected because the measures contained therein were overly restrictive for summer flounder in light of the best scientific information available. Three alternatives, including the alternative implemented by this action, provide the same quota level for scup and black sea bass as Alternative 2.

This final rule implements Alternative 6, which consists of the second most restrictive quota of those

considered for summer flounder and is equal to the most restrictive quota alternatives considered for scup and black sea bass. As such, the economic impacts of the alternative are the second highest for summer flounder and equal to the highest impacts for scup and black sea bass. Relative to 2006, the 2007 commercial quotas and recreational harvest limits contained in this action would result in the following TAL decreases for the commercial and recreational sectors:

- 45 percent for summer flounder
- 26 percent for scup
- 38 percent for black sea bass

This alternative was selected because it is based on the best science available and is consistent with the goals, objectives, and requirements of the FMP, its implementing regulations, and the Magnuson-Stevens Act. It contains the highest landing limits that achieve the highest probability of attaining the fishing mortality and exploitation targets for the summer flounder fishery for 2007 among the alternatives considered. Alternative 6 follows the recommendation of the Monitoring Committee and Council staff for a risk-averse quota in the scup fishery and was selected because of the current overfished status of the fishery, uncertainty associated with the current survey indices, and poor 2004 and 2005 year classes. The black sea bass quota in Alternative 6 was also recommended by the Monitoring Committee and Council staff. The black sea bass quota in Alternative 6 was selected as a risk-averse measure that will constrain harvest within the 2005 and 2006 levels until such time that stock determination criteria that are scientifically supportable can be developed.

Table 5 presents the 2007 initial TALs, RSA, commercial quotas adjusted for RSA, and preliminary recreational harvests for the fisheries under the five analyzed quota alternatives.

TABLE 5. COMPARISON OF THE ALTERNATIVES OF QUOTA COMBINATIONS REVIEWED

	Initial TAL		RSA		2006 Commercial Quota Overage		Preliminary Adjusted Commercial Quota		Preliminary Recreational Harvest Limit	
	million lb	mt	lb	mt	lb	mt	million lb	mt	million lb	mt
Quota Alternative 1 (Council's Preferred)										
Summer Flounder	19.9	9,026	567,092	257	253,082	115	11.45	5,193	7.63	3,462
Scup	16	7,257	480	218	0	0	11.93	5,411	3.59	1,628
Black Sea Bass	6.5	2,948	132,000	60	0	0	3.12	1,415	3.25	1,474
Quota Alternative 2 (Most Restrictive)										
Summer Flounder	5.22	2,368	156,600	71	253,082	115	2.89	1,309	19.24	873
Scup	12	5,442	360,000	163	0	0	8.90	4,037	2.74	1,243
Black Sea Bass	5	2,268	132,000	60	0	0	2.39	1,084	2.48	1,125
Quota Alternative 3 (Status-Quo-Least Restrictive)										
Summer Flounder	23.59	10,700	567,062	257	253,082	115	13.66	6,197	9.11	4,131
Scup	16.27	7,380	488,100	221	0	0	12.13	5,502	3.65	1,656
Black Sea Bass	8	3.629	132,000	60	0	0	3.86	1,751	4.01	1,819
Quota Alternative 4 (No Action- described but not analyzed)										
Quota Alternative 5 (NMFS Analysis)										
Summer Flounder	14.156	6,421	424,680	193	253,082	115	8.09	3,668	5.39	2,445
Scup	12	5,443	360,000	163	0	0	8.90	4,037	2.74	1,243
Black Sea Bass	5	2,268	150,000	68	0	0	2.38	1,078	2.47	1,122
Quota Alternative 6 (NMFS Analysis-Implemented by this Final Rule)										
Summer Flounder	12.983	5,889	389,490	177	253,082	115	7.40	3,359	4.94	2,239
Scup	12	5,443	360,000	163	0	0	8.90	4,037	2.74	1,243

TABLE 5. COMPARISON OF THE ALTERNATIVES OF QUOTA COMBINATIONS REVIEWED—Continued

	Initial TAL		RSA		2006 Commercial Quota Overage		Preliminary Adjusted Commercial Quota		Preliminary Recreational Harvest Limit	
	million lb	mt	lb	mt	lb	mt	million lb	mt	million lb	mt
Black Sea Bass	5	2,268	150,000	68	0	0	2.38	1,084	2.47	1,122

The revenue decreases associated with the RSA program are expected to be minimal, and are expected to yield important benefits associated with improved fisheries data. It should also be noted that fish harvested under the RSA would be sold, and the profits would be used to offset the costs of research. As such, total gross revenue to the industry will not decrease substantially if the RSAs are utilized.

Small Entity Compliance Guide

Section 212 of the Small Business Regulatory Enforcement Fairness Act of 1996 states that, for each rule or group of related rules for which an agency is required to prepare a FRFA, the agency shall publish one or more guides to assist small entities in complying with the rule, and shall designate such publications as ''small entity compliance guides.'' The agency shall explain the actions a small entity is required to take to comply with a rule or group of rules. As part of this rulemaking process, a small entity compliance guide will be sent to all holders of Federal permits issued for the summer flounder, scup, and black sea bass fisheries. In addition, copies of this final rule and guide (i.e., permit holder letter) are available from NMFS (see **ADDRESSES**) and at the following website: *http://www.nero.noaa.gov/nero/nr/index.html*.

Dated: December 8, 2006.

Samuel D. Rauch III,

Deputy Assistant Administrator for Regulatory Programs, National Marine Fisheries Service.

[FR Doc. 06–9677 Filed 12–8–06; 4:13 pm]

BILLING CODE 3510–22–S

Proposed Rules

Federal Register
Vol. 71, No. 240
Thursday, December 14, 2006

This section of the FEDERAL REGISTER contains notices to the public of the proposed issuance of rules and regulations. The purpose of these notices is to give interested persons an opportunity to participate in the rule making prior to the adoption of the final rules.

DEPARTMENT OF TRANSPORTATION

Federal Aviation Administration

14 CFR Part 39

[Docket No. FAA–2006–26120; Directorate Identifier 2006–NM–184–AD]

RIN 2120–AA64

Airworthiness Directives; Airbus Model A300 B4–600, B4–600R, and F4–600R Series Airplanes and Model C4–605R Variant F Airplanes (Collectively Called A300–600 Series Airplanes)

AGENCY: Federal Aviation Administration (FAA), Department of Transportation (DOT).

ACTION: Notice of proposed rulemaking (NPRM).

SUMMARY: The FAA proposes to adopt a new airworthiness directive (AD) for all Airbus Model A300–600 series airplanes. This proposed AD would require revising the Airworthiness Limitations Section of the Instructions for Continued Airworthiness to incorporate new limitations for fuel tank systems. This proposed AD results from fuel system reviews conducted by the manufacturer. We are proposing this AD to prevent the potential of ignition sources inside fuel tanks, which, in combination with flammable fuel vapors caused by latent failures, alterations, repairs, or maintenance actions, could result in fuel tank explosions and consequent loss of the airplane.

DATES: We must receive comments on this proposed AD by January 16, 2007.

ADDRESSES: Use one of the following addresses to submit comments on this proposed AD.

- *DOT Docket Web site:* Go to *http://dms.dot.gov* and follow the instructions for sending your comments electronically.
- *Government-wide rulemaking Web site:* Go to *http://www.regulations.gov* and follow the instructions for sending your comments electronically.
- *Mail:* Docket Management Facility, U.S. Department of Transportation, 400 Seventh Street, SW., Nassif Building, Room PL–401, Washington, DC 20590.
- *Fax:* (202) 493–2251.
- *Hand Delivery:* Room PL–401 on the plaza level of the Nassif Building, 400 Seventh Street, SW., Washington, DC, between 9 a.m. and 5 p.m., Monday through Friday, except Federal holidays.

Contact Airbus, 1 Rond Point Maurice Bellonte, 31707 Blagnac Cedex, France, for service information identified in this proposed AD.

FOR FURTHER INFORMATION CONTACT: Tom Stafford, Aerospace Engineer, International Branch, ANM–116, FAA, Transport Airplane Directorate, 1601 Lind Avenue, SW., Renton, Washington 98057–3356; telephone (425) 227–1622; fax (425) 227–1149.

SUPPLEMENTARY INFORMATION:

Comments Invited

We invite you to submit any relevant written data, views, or arguments regarding this proposed AD. Send your comments to an address listed in the **ADDRESSES** section. Include the docket number ''FAA–2006–26120; Directorate Identifier 2006-NM–184–AD'' at the beginning of your comments. We specifically invite comments on the overall regulatory, economic, environmental, and energy aspects of the proposed AD. We will consider all comments received by the closing date and may amend the proposed AD in light of those comments.

We will post all comments we receive, without change, to *http://dms.dot.gov,* including any personal information you provide. We will also post a report summarizing each substantive verbal contact with FAA personnel concerning this proposed AD. Using the search function of that web site, anyone can find and read the comments in any of our dockets, including the name of the individual who sent the comment (or signed the comment on behalf of an association, business, labor union, etc.). You may review the DOT's complete Privacy Act Statement in the **Federal Register** published on April 11, 2000 (65 FR 19477–78), or you may visit *http://dms.dot.gov.*

Examining the Docket

You may examine the AD docket on the Internet at http://dms.dot.gov, or in person at the Docket Management Facility office between 9 a.m. and 5 p.m., Monday through Friday, except Federal holidays. The Docket Management Facility office (telephone (800) 647–5227) is located on the plaza level of the Nassif Building at the DOT street address stated in the **ADDRESSES** section. Comments will be available in the AD docket shortly after the Docket Management System receives them.

Discussion

The FAA has examined the underlying safety issues involved in fuel tank explosions on several large transport airplanes, including the adequacy of existing regulations, the service history of airplanes subject to those regulations, and existing maintenance practices for fuel tank systems. As a result of those findings, we issued a regulation titled ''Transport Airplane Fuel Tank System Design Review, Flammability Reduction and Maintenance and Inspection Requirements'' (66 FR 23086, May 7, 2001). In addition to new airworthiness standards for transport airplanes and new maintenance requirements, this rule included Special Federal Aviation Regulation No. 88 (''SFAR 88,'' Amendment 21–78, and subsequent Amendments 21–82 and 21–83).

Among other actions, SFAR 88 requires certain type design (*i.e.*, type certificate (TC) and supplemental type certificate (STC)) holders to substantiate that their fuel tank systems can prevent ignition sources in the fuel tanks. This requirement applies to type design holders for large turbine-powered transport airplanes and for subsequent modifications to those airplanes. It requires them to perform design reviews and to develop design changes and maintenance procedures if their designs do not meet the new fuel tank safety standards. As explained in the preamble to the rule, we intended to adopt airworthiness directives to mandate any changes found necessary to address unsafe conditions identified as a result of these reviews.

In evaluating these design reviews, we have established four criteria intended to define the unsafe conditions associated with fuel tank systems that require corrective actions. The percentage of operating time during which fuel tanks are exposed to flammable conditions is one of these criteria. The other three criteria address the failure types under evaluation:

single failures, single failures in combination with a latent condition(s), and in-service failure experience. For all four criteria, the evaluations included consideration of previous actions taken that may mitigate the need for further action.

The Joint Aviation Authorities (JAA) has issued a regulation that is similar to SFAR 88. (The JAA is an associated body of the European Civil Aviation Conference (ECAC) representing the civil aviation regulatory authorities of a number of European States who have agreed to co-operate in developing and implementing common safety regulatory standards and procedures.) Under this regulation, the JAA stated that all members of the ECAC that hold type certificates for transport category airplanes are required to conduct a design review against explosion risks.

We have determined that the actions identified in this AD are necessary to reduce the potential of ignition sources inside fuel tanks, which, in combination with flammable fuel vapors, could result in fuel tank explosions and consequent loss of the airplane.

The European Aviation Safety Agency (EASA), which is the airworthiness authority for the European Union, notified us that an unsafe condition may exist on all Airbus Model A300 B4–600, B4–600R, and F4–600R series airplanes and Model C4–605R Variant F airplanes (collectively called A300–600 series airplanes). The EASA advises that Airbus has issued new fuel airworthiness limitations (FALs) to address failure conditions for which an unacceptable probability of ignition risk could exist if specific tasks or practices or both are not performed in accordance with the manufacturer's requirements. The new FALs are intended to satisfy the JAA's Interim Policy of Fuel Tank Safety and SFAR 88 requirements.

Relevant Service Information

Airbus has issued A300–600 ALS—Airworthiness Limitations Section, dated May 31, 2006, which is a repository for stand-alone documents that are approved independently from each other. The Airbus A300–600 ALS comprises the following documents:

- ALS Part 1—Safe Life Airworthiness Limitation Items
- ALS Part 2—Damage-Tolerant Airworthiness Limitation Items
- ALS Part 3—Certification Maintenance Requirements
- ALS Part 4—Aging Systems Maintenance
- ALS Part 5—Fuel Airworthiness Limitations

ALS Part 5—Fuel Airworthiness Limitations, dated May 31, 2006, refers to Airbus A300–600 Fuel Airworthiness Limitations, Document 95A.1929/05, Issue 1, dated December 19, 2005 (approved by the EASA on March 13, 2006). Section 1, ''Maintenance/Inspection Tasks,'' of Document 95A.1929/05 describes certain FAL inspections, which are periodic inspections of certain features for latent failures that could contribute to an ignition source. Section 2, ''Critical Design Configuration Control Limitations,'' of Document 95A.1929/05 identifies critical design configuration control limitations (CDCCLs). A CDCCL is a limitation requirement to preserve a critical ignition source prevention feature of the fuel tank system design that is necessary to prevent the occurrence of an unsafe condition. The purpose of a CDCCL is to provide instruction to retain the critical ignition source prevention feature during configuration change that may be caused by alterations, repairs, or maintenance actions. A CDCCL is not a periodic inspection.

Accomplishing the actions specified in the service information is intended to adequately address the unsafe condition. The EASA mandated the service information and issued airworthiness directive 2006–0201, dated July 11, 2006, to ensure the continued airworthiness of these airplanes in the European Union.

FAA's Determination and Requirements of the Proposed AD

These airplane models are manufactured in France and are type certificated for operation in the United States under the provisions of section 21.29 of the Federal Aviation Regulations (14 CFR 21.29) and the applicable bilateral airworthiness agreement. As described in FAA Order 8100.14A, ''Interim Procedures for Working with the European Community on Airworthiness Certification and Continued Airworthiness,'' dated August 12, 2005, the EASA has kept the FAA informed of the situation described above. We have examined the EASA's findings, evaluated all pertinent information, and determined that we need to issue an AD for airplanes of this type design that are certificated for operation in the United States.

Therefore, we are proposing this AD, which would require revising the Airworthiness Limitations Section of the Instructions for Continued Airworthiness to incorporate new limitations for fuel tank systems.

Costs of Compliance

This proposed AD would affect about 138 airplanes of U.S. registry. The proposed actions would take about 2 work hours per airplane, at an average labor rate of $80 per work hour. Based on these figures, the estimated cost of the proposed AD for U.S. operators is $22,080, or $160 per airplane.

Authority for This Rulemaking

Title 49 of the United States Code specifies the FAA's authority to issue rules on aviation safety. Subtitle I, Section 106, describes the authority of the FAA Administrator. Subtitle VII, Aviation Programs, describes in more detail the scope of the Agency's authority.

We are issuing this rulemaking under the authority described in Subtitle VII, Part A, Subpart III, Section 44701, ''General requirements.'' Under that section, Congress charges the FAA with promoting safe flight of civil aircraft in air commerce by prescribing regulations for practices, methods, and procedures the Administrator finds necessary for safety in air commerce. This regulation is within the scope of that authority because it addresses an unsafe condition that is likely to exist or develop on products identified in this rulemaking action.

Regulatory Findings

We have determined that this proposed AD would not have federalism implications under Executive Order 13132. This proposed AD would not have a substantial direct effect on the States, on the relationship between the national Government and the States, or on the distribution of power and responsibilities among the various levels of government.

For the reasons discussed above, I certify that the proposed regulation:

1. Is not a ''significant regulatory action'' under Executive Order 12866;
2. Is not a ''significant rule'' under the DOT Regulatory Policies and Procedures (44 FR 11034, February 26, 1979); and
3. Will not have a significant economic impact, positive or negative, on a substantial number of small entities under the criteria of the Regulatory Flexibility Act.

We prepared a regulatory evaluation of the estimated costs to comply with this proposed AD and placed it in the AD docket. See the **ADDRESSES** section for a location to examine the regulatory evaluation.

List of Subjects in 14 CFR Part 39

Air transportation, Aircraft, Aviation safety, Safety.

The Proposed Amendment

Accordingly, under the authority delegated to me by the Administrator,

the FAA proposes to amend 14 CFR part 39 as follows:

PART 39—AIRWORTHINESS DIRECTIVES

1. The authority citation for part 39 continues to read as follows:

Authority: 49 U.S.C. 106(g), 40113, 44701.

§ 39.13 [Amended]

2. The Federal Aviation Administration (FAA) amends § 39.13 by adding the following new airworthiness directive (AD):

Airbus: Docket No. FAA–2006–26120; Directorate Identifier 2006–NM–184–AD.

Comments Due Date

(a) The FAA must receive comments on this AD action by January 16, 2007.

Affected ADs

(b) None.

Applicability

(c) This AD applies to all Airbus Model A300 B4–601, B4–603, B4–620, and B4–622 airplanes; Model A300 B4–605R and B4–622R airplanes; Model A300 F4–605R and F4–622R airplanes; and Model A300 C4–605R Variant F airplanes; certificated in any category.

Note 1: This AD requires revisions to certain operator maintenance documents to include new inspections and critical design configuration control limitations (CDCCLs). Compliance with the operator maintenance documents is required by 14 CFR 91.403(c). For airplanes that have been previously modified, altered, or repaired in the areas addressed by these inspections and CDCCLs, the operator may not be able to accomplish the inspections and CDCCLs described in the revisions. In this situation, to comply with 14 CFR 91.403(c), the operator must request approval for an alternative method of compliance according to paragraph (j) of this AD. The request should include a description of changes to the required inspections and CDCCLs that will preserve the critical ignition source prevention feature of the affected fuel system.

Unsafe Condition

(d) This AD results from fuel system reviews conducted by the manufacturer. We are issuing this AD to prevent the potential of ignition sources inside fuel tanks, which, in combination with flammable fuel vapors caused by latent failures, alterations, repairs, or maintenance actions, could result in fuel tank explosions and consequent loss of the airplane.

Compliance

(e) You are responsible for having the actions required by this AD performed within the compliance times specified, unless the actions have already been done.

Revise Airworthiness Limitations Section (ALS) To Incorporate Fuel Maintenance and Inspection Tasks

(f) Within 3 months after the effective date of this AD, revise the ALS of the Instructions for Continued Airworthiness to incorporate Airbus A300–600 ALS Part 5—Fuel Airworthiness Limitations, dated May 31, 2006, as defined in Airbus A300–600 Fuel Airworthiness Limitations, Document 95A.1929/05, Issue 1, dated December 19, 2005 (approved by the European Aviation Safety Agency (EASA) on March 13, 2006), Section 1, ''Maintenance/Inspection Tasks.'' For all tasks identified in Section 1 of Document 95A.1929/05, the initial compliance times start from the effective date of this AD and must be accomplished within the repetitive interval specified in Section 1 of Document 95A.1929/05, except as provided by paragraph (g) of this AD.

Initial Compliance Time for Task 28–18–00–03–1

(g) For Task 28–18–00–03–1, ''Operational check of lo-level/underfull/calibration sensors,'' identified in Section 1, ''Maintenance/Inspection Tasks,'' of Airbus A300–600 Fuel Airworthiness Limitations, Document 95A.1929/05, Issue 1, dated December 19, 2005: The initial compliance time is the later of the times specified in paragraphs (g)(1) and (g)(2) of this AD. Thereafter, Task 28–18–00–03–1 must be accomplished within the repetitive interval specified in Section 1 of Document 95A.1929/05.

(1) Prior to the accumulation of 34,000 total flight hours.

(2) Within 72 months or 20,000 flight hours after the effective date of this AD, whichever occurs first.

Revise ALS To Incorporate CDCCLs

(h) Within 12 months after the effective date of this AD, revise the ALS of the Instructions for Continued Airworthiness to incorporate Airbus A300–600 ALS Part 5—Fuel Airworthiness Limitations, dated May 31, 2006, as defined in Airbus A300–600 Fuel Airworthiness Limitations, Document 95A.1929/05, Issue 1, dated December 19, 2005 (approved by the EASA on March 13, 2006), Section 2, ''Critical Design Configuration Control Limitations.''

No Alternative Inspections, Inspection Intervals, or CDCCLs

(i) Except as provided by paragraph (j) of this AD: After accomplishing the actions specified in paragraphs (f) and (h) of this AD, no alternative inspections, inspection intervals, or CDCCLs may be used.

Alternative Methods of Compliance (AMOCs)

(j)(1) The Manager, International Branch, ANM–116, Transport Airplane Directorate, FAA, has the authority to approve AMOCs for this AD, if requested in accordance with the procedures found in 14 CFR 39.19.

(2) Before using any AMOC approved in accordance with § 39.19 on any airplane to which the AMOC applies, notify the appropriate principal inspector in the FAA Flight Standards Certificate Holding District Office.

Related Information

(k) EASA airworthiness directive 2006–0201, dated July 11, 2006, also addresses the subject of this AD.

Issued in Renton, Washington, on October 17, 2006.

Jeffrey E. Duven,

Acting Manager, Transport Airplane Directorate, Aircraft Certification Service.

[FR Doc. E6–21262 Filed 12–13–06; 8:45 am]

BILLING CODE 4910–13–P

DEPARTMENT OF HEALTH AND HUMAN SERVICES

Food and Drug Administration

21 CFR Part 312

[Docket No. 2006N–0062]

RIN 0910–AF14

Expanded Access to Investigational Drugs for Treatment Use

AGENCY: Food and Drug Administration, HHS.

ACTION: Proposed rule.

SUMMARY: The Food and Drug Administration (FDA) is proposing to amend its regulations on access to investigational new drugs for the treatment of patients. The proposed rule would clarify existing regulations and add new types of expanded access for treatment use. Under the proposal, expanded access to investigational drugs for treatment use would be available to individual patients, including in emergencies; intermediate-size patient populations; and larger populations under a treatment protocol or treatment investigational new drug application (IND). The proposed rule is intended to improve access to investigational drugs for patients with serious or immediately life-threatening diseases or conditions, who lack other therapeutic options and who may benefit from such therapies.

DATES: Submit written or electronic comments by March 14, 2007. Submit written comments on the information collection requirements by January 16, 2007.

ADDRESSES: You may submit comments, identified by Docket No. 2006N–0062 and RIN 0910–AF14, by any of the following methods:

Electronic Submissions

Submit electronic comments in the following ways:

- Federal eRulemaking Portal: *http://www.regulations.gov*. Follow the instructions for submitting comments.
- Agency Web site: *http://www.fda.gov/dockets/ecomments*.

Follow the instructions for submitting comments on the agency Web site.

Written Submissions

Submit written submissions in the following ways:

- FAX: 301–827–6870.
- Mail/Hand delivery/Courier [For paper, disk, or CD–ROM submissions]: Division of Dockets Management (HFA–305), Food and Drug Administration, 5630 Fishers Lane, rm. 1061, Rockville, MD 20852.

To ensure more timely processing of comments, FDA is no longer accepting comments submitted to the agency by e-mail. FDA encourages you to continue to submit electronic comments by using the Federal eRulemaking Portal or the agency Web site, as described in the *Electronic Submissions* portion of this paragraph.

Instructions: All submissions received must include the agency name and docket number and Regulatory Information Number (RIN) for this rulemaking. All comments received may be posted without change to *http://www.fda.gov/ohrms/dockets/default.htm*, including any personal information provided. For additional information on submitting comments, see the ''Comments'' heading of the **SUPPLEMENTARY INFORMATION** section of this document.

Docket: For access to the docket to read background documents or comments received, go to *http://www.fda.gov/ohrms/dockets/default.htm* and insert the docket number, found in brackets in the heading of this document, into the ''Search'' box and follow the prompts and/or go to the Division of Dockets Management, 5630 Fishers Lane, rm. 1061, Rockville, MD 20852.

The Office of Management and Budget (OMB) is still experiencing significant delays in the regular mail, including first class and express mail, and messenger deliveries are not being accepted. To ensure that comments on the information collection are received, OMB recommends that written comments be faxed to the Office of Information and Regulatory Affairs, OMB, Attn: Desk Officer for FDA, FAX: 202–395–6974.

FOR FURTHER INFORMATION CONTACT:

Colleen L. Locicero, Center for Drug Evaluation and Research, Food and Drug Administration, 10903 New Hampshire Ave., Bldg. 22, rm. 4200, Silver Spring, MD 20993–0002, 301–796–2270; or Steve Ripley, Center for Biologics Evaluation and Research (HFM–17), Food and Drug Administration, 1401 Rockville Pike, Rockville, MD 20852, 301–827–6210.

SUPPLEMENTARY INFORMATION:

Table of Contents

I. Background
  A. Informal Access to Drugs for Treatment Use
  B. Current Regulations Concerning Expanded Access for Treatment Use
  C. Concerns About Treatment Use Programs
  D. The Food and Drug Administration Modernization Act of 1997
II. Why FDA Is Proposing This Rule
III. Goals and Limitations of the Proposed Rule
IV. Description of the Proposed Rule
  A. Sections Removed
  B. Clinical Holds
  C. Expanded Access Overview
  D. General Provisions
  E. Requirements for All Expanded Access Uses (Proposed § 312.305)
  F. Expanded Access for Individual Patients (Proposed § 312.310)
  G. Expanded Access for Intermediate-Size Patient Populations (Proposed § 312.315)
  H. Expanded Access Treatment IND or Treatment Protocol (Proposed § 312.320)
  I. Open-Label Safety Studies
  J. Continuation Phase of a Clinical Trial
V. Legal Authority
VI. Environmental Impact
VII. Analysis of Economic Impacts
  A. Objectives of the Proposed Action
  B. Nature of the Problem Being Addressed
  C. Baseline for the Analysis
  D. Nature of the Impact
  E. Benefits of the Proposed Rule
  F. Costs of the Proposed Rule
  G. Minimizing the Impact on Small Entities
VIII. Paperwork Reduction Act of 1995
  A. The Proposed Rule
  B. Estimates of Reporting Burden
IX. Request for Comments
X. Federalism

I. Background

A. Informal Access to Drugs for Treatment Use

FDA has a long history of permitting access to investigational drugs to treat serious or immediately life-threatening diseases or conditions without adequate available therapy under INDs, generally for drugs being evaluated in clinical studies intended to support marketing. The distinction between these and the usual studies covered under an IND is that the treatment uses are not primarily to answer safety or effectiveness questions about the drug, but are intended to treat the patient. Before 1987, there was no formal recognition of such treatment use in the IND regulations, but investigational drugs were made available for treatment use informally. ''Compassionate use INDs,'' ''single-patient protocol exceptions,'' and ''large open protocols'' are some of the terms that have been used to refer to such informal access. The vast majority of these INDs were used to make an investigational drug available to an individual patient, but some of the expanded access programs made particularly promising investigational drugs available to large populations. For example, more than 10,000 patients obtained access through treatment access programs to the first cardioselective beta-blockers and the first calcium channel blockers for vasospastic angina.

B. Current Regulations Concerning Expanded Access for Treatment Use

In 1987, FDA revised the IND regulations in part 312 (21 CFR part 312) to explicitly provide for one specific kind of treatment use of investigational drugs (52 FR 19466, May 22, 1987). Section 312.34 authorizes broad access to investigational drugs under a treatment protocol or treatment IND when the following criteria are met:

- The drug is intended to treat a serious or immediately life-threatening disease;
- There is no comparable or satisfactory alternative drug or other therapy available to treat that stage of the disease in the intended patient population;
- The drug is under investigation in a controlled clinical trial under an IND in effect for the trial, or all clinical trials have been completed; and
- The sponsor of the controlled clinical trial is actively pursuing marketing approval of the investigational drug with due diligence.

Section 312.34 states that for a serious disease, data from phase 3 trials or, in appropriate circumstances, data from phase 2 trials would ordinarily be needed to permit treatment use in a substantial population. For an immediately life-threatening disease, less evidence of safety and effectiveness is needed for treatment use. The standard for treatment use for immediately life-threatening conditions is that the available scientific evidence, taken as a whole, provides a reasonable basis to conclude that the drug may be effective and would not expose patients to an unreasonable and significant additional risk of illness or injury. FDA estimates that more than 100,000 patients have received investigational drugs through treatment INDs.

The 1987 IND regulations recognized only one kind of treatment use, the treatment protocol or treatment IND, generally providing availability to a broad population. However, it also implicitly acknowledged the existence of other kinds of treatment use, notably use in individual patients, by adding a provision describing an expedited procedure to obtain an investigational drug for treatment use in an emergency

situation (§ 312.36). However, § 312.36 does not describe criteria or requirements that must be met to authorize individual patient treatment use.

C. Concerns About Treatment Use Programs

FDA has been criticized for its failure to explain in regulation or guidance the basis for agency decisionmaking on individual patient treatment use and other treatment use programs not currently described in FDA's regulations. One concern is that the lack of specific criteria and submission requirements results in disparate access to treatment use for different types of patients and diseases. Some have asserted that knowledge of FDA's policies on these other kinds of treatment use tends to be concentrated among physicians in academic medical centers who are familiar with investigational drugs and FDA procedures. Consequently, according to this line of criticism, patients treated outside of academic medical centers are less likely to have access to investigational drugs for treatment use. There has also been concern that access to investigational drugs for treatment use has focused primarily on cancer- and human immunodeficiency virus (HIV)-related conditions, and that patients with other types of serious diseases or conditions have not had comparable access to appropriate treatment use of unapproved drugs.

D. The Food and Drug Administration Modernization Act of 1997

In response to these concerns about inconsistent policies, inequitable access, and preferential access for certain categories of disease, in the Food and Drug Administration Modernization Act of 1997 (FDAMA) (Public Law 105–115), Congress amended the Federal Food, Drug, and Cosmetic Act (the act) to include specific provisions concerning expanded access to investigational drugs for treatment use (Expanded Access to Unapproved Therapies and Diagnostics, section 561 (21 U.S.C. 360bbb) of the act). By incorporating specific expanded access provisions in the statute, Congress intended to emphasize that ''opportunities to participate in expanded access programs are available to every individual with a life-threatening or seriously debilitating illness for which there is not an effective, approved therapy'' (Joint Explanatory Statement of the Committee of Conference in House Report 105–399, November 9, 1997, p. 100).

Section 561(a) of the act provides specific statutory authority to make investigational drugs available for the diagnosis, monitoring, or treatment of a serious disease or condition in an emergency situation. The Secretary of Health and Human Services (the Secretary) is to determine appropriate conditions under which an investigational drug may be made available in an emergency situation.

Section 561(b) of the act permits any person, acting through a licensed physician, to request access to an investigational drug to diagnose, monitor, or treat a serious disease or condition provided that the following conditions are met:

- The licensed physician determines that the person has no comparable or satisfactory alternative therapy to diagnose, monitor, or treat the disease or condition, and that the probable risk from the investigational drug is not greater than the probable risk from the disease or condition;
- The Secretary determines that there is sufficient evidence of safety and effectiveness to support the use of the investigational drug;
- The Secretary determines that provision of the investigational drug will not interfere with the initiation, conduct, or completion of clinical investigations to support marketing approval; and
- The sponsor or clinical investigator submits a protocol consistent with the requirements of section 505(i) of the act (21 U.S.C 355(i)) and its implementing regulations in part 312, which describe use of the drug in a single patient or a small group of patients.

Section 561(c) of the act closely tracks existing § 312.34 of the IND regulations. Section 561(c) authorizes the Secretary to permit an investigational drug to be made available for widespread access if the following determinations have been made:

1. The investigational drug is intended for use in the diagnosis, monitoring, or treatment of a serious or immediately life-threatening disease or condition;
2. There is no comparable or satisfactory alternative therapy available to diagnose, monitor, or treat that stage of disease or condition in a particular patient population;
3. The investigational drug is under investigation in a controlled clinical trial under an IND, or all clinical trials necessary for approval of the use have been completed;
4. The sponsor of the controlled clinical trial is actively pursuing marketing approval with due diligence;
5. The provision of the investigational drug will not interfere with the enrollment of patients in ongoing clinical investigations;
6. In the case of serious diseases, there is sufficient evidence of safety and effectiveness to support the use;
7. In the case of immediately life-threatening diseases, the available scientific evidence, taken as a whole, provides a reasonable basis to conclude that the investigational drug may be effective for its intended use and would not expose patients to an unreasonable and significant risk of illness or injury.

Section 561(c) also provides that a protocol for an expanded access treatment IND shall be subject to the requirements of section 505(i) of the act and FDA's implementing regulations in part 312.

To specifically address concerns that physicians and their patients are often unaware of the availability of investigational drugs under access programs, section 561(c) of the act also allows the Secretary to inform national, State, and local medical associations and societies, voluntary health associations, and other appropriate persons about the availability of expanded access treatment INDs or treatment protocols.

II. Why FDA Is Proposing This Rule

This proposed rule is intended to further address the concerns that motivated Congress to include in the act specific provisions on expanded access to investigational drugs for treatment use. As discussed in section I of this document, these concerns included inconsistent application of access policies and programs and inequities in access based on the relative sophistication of the setting in which a patient is treated or on the patient's disease or condition. By describing in detail in the proposed rule the criteria, submission requirements, and safeguards for the different types of expanded access for treatment uses of investigational drugs, the agency seeks to increase awareness and knowledge of expanded access programs and the procedures for obtaining investigational drugs. Increased knowledge and awareness about expanded access options should make investigational drugs more widely available in appropriate situations. Clearly articulated procedures for obtaining investigational drugs for treatment use should ease the administrative burdens on individual physicians seeking investigational drugs for their patients, as well as the burdens on sponsors who make investigational drugs available for treatment use. In addition, we expect

that clearly articulating procedures and standards for expanded access will result in more patients with serious or immediately life-threatening diseases or conditions getting the earliest possible access to these therapies.

III. Goals and Limitations of the Proposed Rule

Recognizing that FDA's authority derives from the act, the proposed rule attempts to reconcile individual patients' desires to make their own decisions about their health care with society's need for drugs to be developed for marketing. It recognizes the need for the risks and benefits of drugs to be well characterized and the need for appropriate protection of human subjects in an investigation. These interests are not always easily reconciled. Allowing individual patients relatively unfettered access to an investigational drug at a preliminary stage in its development, for example, may expose them to significant and unacceptable risks.

In addition, patients may find participation in a clinical trial less desirable than receiving the drug for treatment use for a variety of reasons. For example, clinical trial participants may receive a treatment other than the study drug, and clinical trials may have more onerous monitoring requirements (such as laboratory and other tests). Thus, a system of blindly permitting uncontrolled access to investigational drugs could make it difficult or impossible to enroll adequate numbers of patients in clinical trials to establish the safety and effectiveness of the drug for marketing approval.

FDA has a statutory responsibility to ensure that marketed drugs are safe and effective, and its rules should not compromise the integrity of the drug development process. In this proposed rule, as envisioned by the act, the agency has tried to strike the appropriate balance between authorizing access to promising drugs for treatment use under our expanded access authority and ensuring the integrity of the drug approval process.

While this proposed rule aims to clarify, and thereby expand, the situations in which expanded access to unapproved drugs could be available, under its existing authority, FDA cannot compel a drug manufacturer to provide access to investigational drugs for treatment use.

IV. Description of the Proposed Rule

FDA is proposing to amend its regulations on INDs by removing the current sections on treatment use, revising the section on clinical holds, and adding subpart I on expanded access. The term ''expanded access'' is used here to refer to all types of treatment uses. The term ''treatment protocol or treatment IND'' continues to refer to one specific kind of treatment use, the large access protocol.

A. Sections Removed

The proposed rule would remove the following three sections of FDA's regulations:

- Current § 312.34 concerning the treatment use of an investigational new drug;
- Current § 312.35 concerning submissions for treatment use; and
- Current § 312.36 concerning emergency use of an investigational new drug.

B. Clinical Holds

The proposed rule would amend § 312.42 *Clinical holds and requests for modification* by providing for clinical holds, when necessary, of any of the types of expanded access uses described in this proposed rule. A clinical hold is an order issued by FDA to the sponsor to delay a proposed clinical investigation or suspend an ongoing investigation (§ 312.42(a)). Proposed § 312.42(b)(3)(i) provides that FDA may place an expanded access IND or protocol[1] on clinical hold if it is determined that the pertinent criteria in proposed subpart I for permitting the expanded access use to begin are not satisfied or the IND or protocol does not comply with the requirements for expanded access submissions in proposed subpart I.

Proposed § 312.42(b)(3)(ii) provides that FDA may place an ongoing expanded access IND or protocol on clinical hold if it is determined that the pertinent criteria in proposed subpart I for permitting the expanded access are no longer satisfied (e.g., a satisfactory alternative therapy becomes available).

C. Expanded Access Overview

The agency is proposing to add new subpart I to part 312. Proposed subpart I describes the following ways that expanded access to treatment use of investigational drugs would be available:

- Expanded access for individual patients, including emergency procedures;
- Expanded access for intermediate-size patient populations (smaller than those typical of a treatment IND or treatment protocol); and
- Expanded access treatment IND or treatment protocol (described in current §§ 312.34 and 312.35).

The following items are set forth in the proposed rule: (1) Criteria that must be met to authorize the expanded access use, (2) requirements for expanded access submissions, and (3) safeguards to protect patients and preserve the ability to develop meaningful data about treatment use.

D. General Provisions

Proposed § 312.300(a) states that the aim of subpart I is to facilitate the availability of investigational new drugs to seriously ill patients when there is no comparable or satisfactory alternative therapy to diagnose, monitor, or treat the patient's disease or condition. Proposed § 312.300(b) provides a definition of the term ''immediately life-threatening disease'' as a stage of disease in which there is reasonable likelihood that death will occur within a matter of months or in which premature death is likely without early treatment.

E. Requirements for All Expanded Access Uses (Proposed § 312.305)

Proposed § 312.305 contains the general requirements for the use of investigational drugs when the primary purpose is to diagnose, monitor, or treat a patient's disease or condition, rather than to generate safety and effectiveness data to support a marketing application. Proposed § 312.305 contains criteria, submission requirements, and safeguards that apply to all expanded access uses described in proposed subpart I. Additional criteria, submission requirements, and safeguards that apply to specific types of expanded access use are described in the sections of the proposed rule describing those expanded access types.

1. Criteria for All Expanded Access Uses

Proposed § 312.305(a) sets forth three criteria that apply to all types of expanded access use:

a. *First criterion*. Under proposed § 312.305(a)(1), FDA must determine that the patient (or patients) to be treated has a serious or immediately life-threatening disease or condition, and there is no comparable or satisfactory alternative therapy to diagnose, monitor, or treat the disease or condition. Because, by definition, the risks and benefits of investigational drugs are not as well characterized as those of approved drugs, the agency believes, and the act contemplates, that expanded access to investigational

[1] A submission seeking to allow an expanded access use of an investigational drug may come to FDA either in the form of a new, separate IND or as a new protocol submitted to an already existing IND.

drugs is warranted only under these conditions. Section 561(c)(1) and (c)(2) of the act expressly requires FDA to make these determinations in order to authorize a treatment IND or treatment protocol, and section 561(b)(1) and (b)(2) of the act likewise requires FDA to determine that there is sufficient evidence of safety and effectiveness to support the use of the unapproved drug in treating an individual patient or a small group of patients. Determining that the patient has a serious or immediately life-threatening disease or condition and that there is no comparable or satisfactory alternative therapy are integral parts of determining whether there is sufficient evidence of safety and effectiveness to support the proposed use in the situation described by the physician or sponsor seeking the authorization.

In various documents, the agency has described or illustrated what is meant by a serious condition (see, e.g., FDA's guidance for industry entitled ''Fast Track Drug Development Programs—Designation, Development, and Application Review'' (63 FR 64093, November 18, 1998), revised 2004, pp. 3–4; preamble to the 1992 proposed rule on accelerated approval of new drugs for serious or life-threatening illnesses (57 FR 13234 at 13235, April 15, 1992)). As discussed in these documents, the ''serious disease or condition'' requirement refers to conditions that have an important effect on functioning (e.g., stroke, schizophrenia, rheumatoid arthritis, osteoarthritis) or on other aspects of quality of life (e.g., chronic depression, seizures). Alzheimer's dementia, Amyotrophic Lateral Sclerosis (ALS), and narcolepsy are specific examples of serious conditions for which FDA has granted expanded access to investigational drugs in the past. Short-lived and self-limiting morbidity will usually not be sufficient to qualify a condition as serious, but the morbidity need not be irreversible, provided it is persistent or recurrent. Similarly, the proposed requirement here that treatment be for a ''serious disease or condition'' is not intended to be unnecessarily restrictive. It is primarily intended to exclude expanded access to investigational drugs for conditions that are clearly not serious (e.g., symptomatic relief of minor pain or allergic symptoms and other self-limiting conditions not associated with major morbidity). Because of the difficulty of specifically describing the criteria that characterize a ''serious disease or condition,'' the proposed rule itself does not provide a definition of ''serious,'' though it does provide a definition of ''immediately life-threatening.'' See proposed § 312.300(b). We solicit comments on this approach. If a disease or condition were to be both serious and immediately life-threatening, for the purpose of this proposed rule, it would be considered ''immediately life-threatening.''

Ordinarily, a lack of comparable or satisfactory therapeutic alternatives would mean that there exists no other available therapy to treat the patient's condition or that the patient has tried available therapies and failed to respond adequately or is intolerant to them. Available therapy, as defined in FDA's guidance for industry entitled ''Available Therapy'' (69 FR 44039, July 23, 2004), generally refers to FDA-approved products that are labeled to be used for the relevant disease or condition. In some cases, however, available therapy might mean a treatment that is not regulated by FDA (e.g., surgery) or one that is not labeled for use for the relevant disease or condition, but is supported by compelling literature evidence.

b. *Second criterion.* Under proposed § 312.305(a)(2), FDA must determine that the potential patient benefit justifies the potential risks of the treatment use and that those potential risks are not unreasonable in the context of the disease or condition to be treated. FDA is required to make this determination under sections 561(b)(2), (c)(6), and (c)(7) of the act.

c. *Third criterion.* Under proposed § 312.305(a)(3), FDA must determine that providing the investigational drug for the requested use will not interfere with the initiation, conduct, or completion of clinical investigations that could support marketing approval of the expanded access use or otherwise compromise the potential development of the expanded access use. Section 561(b)(3) and (c)(5) of the act requires FDA to make this determination. The most efficient and effective way to make a drug available to all those who can benefit from the drug, is to market it. Therefore, it is important to ensure that expanded access use does not compromise enrollment in the trials needed to demonstrate the safety and effectiveness of the drug.

Proposed § 312.305(a) does not elaborate on the safety and/or effectiveness showing that must be made to merit authorization of the expanded access use. Rather, the showing is described in the criteria that pertain to each type of expanded access because the evidence needed to demonstrate the safety and potential benefit of a proposed use varies with the size of the population to be treated and the relative seriousness of the disease or condition to be treated. Treatment of a large patient population through a treatment IND or treatment protocol[2] generally would require more evidence of safety and effectiveness than treatment of just a few patients. The evidence required to support expanded access for an intermediate-size patient population would be somewhere between that needed for expanded access for an individual patient and that needed for a treatment IND or treatment protocol.

In addition, as the seriousness of the disease increases, it may be appropriate to authorize expanded access use based on less data, still taking the size of the population into account. For example, to support expanded access for an individual patient when the patient has an immediately life-threatening condition that is not responsive to available therapy, ordinarily, completed phase 1 safety testing in humans at doses similar to those to be used in the treatment use, together with preliminary evidence suggesting possible effectiveness, would be sufficient to support such a use. In some cases, however, there may be no relevant clinical experience, and the case for the potential benefit may be based on preclinical data or on the mechanism of action.

In contrast, much more safety and effectiveness data would be needed to support a treatment IND or treatment protocol that anticipated enrollment of several thousand patients with a serious, but not imminently life-threatening, condition. Ordinarily, evidence of safety and effectiveness from phase 3 clinical trials would be needed to support such an expanded access use in these significantly larger populations. If the disease being treated under a treatment IND or treatment protocol were immediately life-threatening, however, compelling data from phase 2 trials might be sufficient to permit expanded access use.

2. Submission Requirements for All Expanded Access Uses

Proposed § 312.305(b)(1) states that an expanded access submission is required

[2]This proposed rule continues to describe the specific type of expanded access for treatment use that makes investigational drugs available to large populations as the ''treatment IND'' or ''treatment protocol.'' We recognize that it may be confusing to carry over this terminology from our current regulations (§§ 312.34 and 312.35). However, this terminology has been used since 1987, and we believe it would be more confusing to change terminology when the nature of this type of treatment use remains essentially unchanged. The broader term ''expanded access'' refers to all kinds of treatment use. We solicit comment on this approach.

for each type of expanded access use. The submission may be a new IND or a protocol amendment to an existing IND. Information required for a submission may be supplied by referring to pertinent information contained in an existing IND if the sponsor of the existing IND grants a right of reference to the IND.

Proposed § 312.305(b)(2) describes the expanded access submission requirements. The following items must be included:

- A cover sheet (Form FDA 1571) meeting the requirements of § 312.23(a);
- The rationale for the intended use of the drug, including a list of available therapeutic options that would ordinarily be tried before resorting to the investigational drug or an explanation of why the use of the investigational drug is preferable to the use of available therapeutic options;
- The criteria for patient selection or, for an individual patient, a description of the patient's disease or condition, including recent medical history and previous treatments of the disease or condition;
- The method of administration of the drug, dose, and duration of therapy;
- A description of the facility where the drug will be manufactured;
- Chemistry, manufacturing, and controls information adequate to ensure the proper identification, quality, purity, and strength of the investigational drug;
- Pharmacology and toxicology information adequate to conclude that the drug is reasonably safe at the dose and duration proposed for treatment use (ordinarily, information that would be adequate to permit clinical testing of the drug in a population of the size expected to be treated); and
- A description of clinical procedures, laboratory tests, or other monitoring necessary to evaluate the effects of the drug and minimize its risks.

If this proposed rule becomes final, FDA will make educational programs and materials available to help physicians and sponsors understand the expanded access use submission requirements in general, as well as the additional information necessary to justify the different types of expanded access.

Proposed § 312.300(b)(3) requires the expanded access submission and its mailing cover to be plainly marked ''EXPANDED ACCESS SUBMISSION.'' If the expanded access submission is for a treatment IND or treatment protocol, the applicable box on Form FDA 1571 must be checked.

3. Safeguards for All Expanded Access Uses

Proposed § 312.305(c) explains how the responsibilities of sponsors and investigators set forth in subpart D of part 312 apply to expanded access.

Proposed § 312.305(c)(1) states that a licensed physician under whose immediate direction an investigational drug is administered or dispensed for expanded access use under subpart I is considered an *investigator* for purposes of part 312 and must comply with the responsibilities for investigators set forth in subpart D of part 312 to the extent they are applicable to the expanded access use. A nonexclusive list of duties of investigators—those duties that apply in all types of expanded access—is set forth in proposed § 312.305(c)(4), and is explained further in the following paragraphs.

Proposed § 312.305(c)(2) provides that an individual or entity that submits an IND or protocol for expanded access under subpart I is considered a *sponsor* for purposes of part 312 and must comply with the responsibilities for sponsors set forth in subpart D of part 312 to the extent they are applicable to the expanded access use.

Proposed § 312.305(c)(3) provides that a licensed physician under whose immediate direction an investigational drug is administered or dispensed, and who submits an IND for expanded access under subpart I, is considered a sponsor-investigator for purposes of part 312 and must comply with the responsibilities for sponsors and investigators set forth in subpart D of part 312 to the extent they are applicable to the expanded access use.

Proposed § 312.305(c)(4) provides that, in all types of expanded access, investigators have the following responsibilities:

- Reporting adverse drug experiences to the sponsor,
- Ensuring that the informed consent requirements of 21 CFR part 50 are met,
- Ensuring that Institutional Review Board (IRB) review of the expanded access use is obtained in a manner consistent with the requirements of part 56 (21 CFR part 56), and
- Maintaining accurate case histories and drug disposition records and retaining records in a manner consistent with the requirements of § 312.62.

However, this list of duties under subpart D of part 312 is not exclusive, and other requirements may apply, depending on the particular type of expanded access.

Proposed § 312.305(c)(5) provides that, in all cases, sponsors have the following responsibilities:

- Submitting IND safety reports and annual reports (when the IND or protocol continues for 1 year or longer) to FDA as required by §§ 312.32 and 312.33,
- Ensuring that licensed physicians are qualified to administer the investigational drug for the expanded access use,
- Providing licensed physicians with the information needed to minimize the risk and maximize the potential benefits of the investigational drug (e.g., providing the investigator's brochure, if there is one),
- Maintaining an effective IND for the expanded access use, and
- Maintaining adequate drug disposition records and retaining records in a manner consistent with the requirements of § 312.57.

As with the list of investigator's duties under proposed § 312.305(c)(4), this list of sponsor's duties under subpart D of part 312 is not exclusive, and other requirements may apply, depending on the particular type of expanded access.

4. When Expanded Access Use May Begin

Proposed § 312.305(d) explains when expanded access use may begin, assuming FDA has not placed a clinical hold on the expanded access use. Under IND rules, a study described in a protocol in a newly submitted IND can begin 30 days after FDA receipt of the IND (or on earlier notification by FDA that the study may proceed), unless FDA puts the study on hold. Once there is an IND in place, new protocols submitted to that IND may begin on the date of submission.

Proposed § 312.300(d)(1) states that an expanded access IND goes into effect 30 days after FDA receives the IND or on earlier notification by FDA that the expanded access use may begin, consistent with FDA's normal practice.

Proposed § 312.300(d)(2) explains when expanded access use may begin, if the expanded access submission is in the form of a new protocol submitted under an existing IND. The proposed rule states that expanded access use under a protocol submitted under an existing IND may begin as described in § 312.30(a). Section 312.30(a) provides that the study under the protocol may begin provided two conditions are met: (1) The sponsor has submitted the protocol to FDA for its review and (2) the protocol has been approved by the IRB with responsibility for review and approval of the study in accordance with the requirements of part 56. Section 312.30(a) states that the sponsor may comply with these two conditions in either order.

The proposed rule provides two exceptions to the general rules concerning when expanded access use under a new protocol may begin. First, proposed § 312.305(d)(2)(i) provides that treatment under a protocol for individual patient expanded access in an emergency situation may begin when it is authorized by the FDA reviewing official. Second, proposed § 312.305(d)(2)(ii) states that expanded access use under proposed § 312.320 (the treatment IND or treatment protocol described in §§ 312.34 and 312.35 of the current IND regulations) may begin 30 days after FDA receives the protocol (or on earlier notification by FDA that the treatment use may begin); that is, there would be a 30-day wait even for a protocol submitted under an existing IND. Expanded access use under a treatment IND or treatment protocol often involves thousands of patients. The agency believes it is important to build in time for agency review of a proposed expanded access use with the potential to affect so many people.

Proposed § 312.300(d)(3) states that FDA may place any expanded access IND or protocol on clinical hold as described in § 312.42.

F. Expanded Access for Individual Patients (Proposed § 312.310)

Proposed § 312.310 would permit an investigational drug to be used for the treatment of an individual patient by a licensed physician.

1. Expanded Access for Individual Patients—Criteria

In addition to the proposed criteria for all expanded access uses, proposed § 312.310(a) sets forth two criteria for permitting an investigational drug to be used for the treatment of an individual patient by a licensed physician.

- First, the physician must determine that the probable risk to the person from the investigational drug is not greater than the probable risk from the disease or condition (proposed § 312.310(a)(1)).
- Second, FDA must determine that the patient cannot obtain the drug under another type of IND (proposed § 312.310(a)(2)). (Section 561(b)(3) of the act requires that FDA determine that provision of the investigational drug will not interfere with the initiation, conduct, or completion of clinical investigations to support marketing approval.) Thus, expanded access for an individual patient would not be available, for example, if the patient can participate in a clinical trial of the investigational drug. However, participation in a clinical trial may not be possible for many reasons. A patient may have a stage of the disease different from the stage being studied. The patient may have failed on, or be intolerant of, the active control in a randomized active-control trial. It may be geographically impossible for the patient to participate in a clinical trial.

One of the proposed general criteria for any expanded access use is that FDA must determine that the potential benefit to the patient justifies the potential risks of the expanded access use and those potential risks are not unreasonable in the context of the disease or condition to be treated. The evidence needed to make this determination for expanded access for an individual patient will vary. For a patient with an immediately life-threatening condition, the evidentiary burden could be very low—little if any clinical evidence to suggest a potential benefit or possibly only animal data to support safety of the use. For a patient with a serious, but not immediately life-threatening, condition who could expect to enjoy a reasonable quality of life for an extended time without any treatment, the evidentiary burden would be higher.

2. Expanded Access for Individual Patients—Submission Requirements

In addition to the proposed submission requirements for all expanded access uses, proposed § 312.310(b) provides that the expanded access submission must include information adequate to demonstrate that the general criteria for expanded access use and those specific to expanded access for individual patients have been met.

Proposed § 312.310(b) provides that if the drug is the subject of an existing IND, the expanded access submission may be made by the sponsor or by a licensed physician. A sponsor may satisfy the submission requirements by amending its existing IND to include a protocol for individual patient expanded access. Sponsors are strongly encouraged to include individual patient expanded access protocols under their own INDs.

Proposed § 312.310(b) provides that a licensed physician may satisfy the submission requirements by obtaining from the sponsor permission for FDA to refer to any information in the IND that would be needed to support the individual patient expanded access request (right of reference) and by providing any other required information not contained in the IND (usually only the information specific to the individual patient). Obtaining a right of reference is consistent with current practice. Sponsors who agree to make an investigational drug available to an individual patient, but prefer that it be provided under an IND obtained by the licensed physician rather than under the sponsor's IND, routinely provide a right of reference to necessary information in the existing IND, and such a right of reference is necessary for FDA to be able to make the necessary determinations about whether the expanded access use may proceed.

3. Expanded Access for Individual Patients—Safeguards

Proposed § 312.310(c) sets forth safeguards that apply specifically to expanded access for individual patients. These proposed safeguards are listed as follows:

- Treatment of an individual patient with an investigational drug is generally limited to a single course of therapy for a specified duration, unless FDA expressly authorizes multiple courses or chronic therapy.
- FDA may require sponsors to monitor an individual patient expanded access use if the use is for an extended duration.
- At the conclusion of treatment, the licensed physician or sponsor (whoever made the expanded access submission) must provide a written summary of the results of the treatment use, including unexpected adverse drug experiences.
- When FDA receives a significant number of similar requests for individual patient expanded access, the agency may ask the sponsor to submit an IND or protocol for the use under § 312.315 or § 312.320.

What constitutes a significant number of similar requests will vary depending on the indication, the number of patients with no available therapeutic options, and the extent to which the drug has the potential to benefit those patients. In general, when the agency receives 10 or more requests for the same individual patient expanded access use within a relatively short time period (e.g., less than 6 months), FDA will consider whether to request that a potential sponsor submit an intermediate-size patient population IND or protocol for the expanded access use and, possibly, conduct a clinical trial of the expanded access use.

4. Expanded Access for Individual Patients—Emergency Procedures

Proposed § 312.310(d) sets out emergency procedures for expanded access for individual patients. If there is an emergency that requires a patient to be treated before a written submission can be made, FDA may authorize the expanded access use to begin without a written submission. Under the proposed rule, the FDA reviewing official may

authorize the emergency use by telephone. Emergency expanded access use may be requested by telephone, facsimile, or other means of electronic communications. The proposed rule also provides phone numbers for requests for investigational drugs and investigational biological drug products, and an after-hours contact number.

Proposed § 312.310(d)(2) requires the licensed physician or sponsor to explain how the expanded access use will meet the requirements of proposed §§ 312.305 and 312.310 and requires agreement to submit an expanded access submission that complies with proposed §§ 312.305 and 312.310 within 5 working days of FDA's authorization of the expanded access use.

For individual patient expanded access use situations in which there is time to make a written submission, the expedited procedures would not be available. Lack of a prior written submission decreases FDA's ability to review the proposed use. Furthermore, FDA's experience with emergency treatment use is that the written submission and followup information on the outcome of the treatment use frequently have not been provided. By limiting use of the emergency procedures to true emergencies, the agency hopes to better monitor individual patient expanded access use.

G. Expanded Access for Intermediate-Size Patient Populations (Proposed § 312.315)

Proposed § 312.315 provides for expanded access use by patient populations smaller than those typical in treatment INDs or treatment protocols. FDA may ask a sponsor to consolidate expanded access use under this section when the agency has received a significant number of requests for individual patient expanded access to an investigational drug for the same use.

Proposed § 312.315(a) states that expanded access use under the section may be needed in the following situations:

- Drug not being developed. The drug is not being developed, for example, because the disease or condition is so rare that the sponsor is unable to recruit patients for a clinical trial. Nonetheless, the drug may represent the only promising therapy for the people with the disease or condition (proposed § 312.315(a)(1)).
- Drug being developed. The drug is being studied in a clinical trial, but patients requesting the drug for expanded access use are unable to participate in the trial. Patients may not be able to participate in the trial, for example, because they have a different disease or stage of disease from the one being studied or otherwise do not meet the enrollment criteria; because enrollment in the trial is closed; or because the trial site is not geographically accessible (proposed § 312.315(a)(2)).
- Approved or related drug. The drug is an approved drug product that is no longer marketed for safety reasons or is unavailable through marketing due to failure to meet the conditions of the approved application (proposed § 312.315(a)(3)(i)), or the drug contains the same active moiety as an approved drug product that is unavailable through marketing due to failure to meet the conditions of the approved application or a drug shortage (proposed § 312.315(a)(3)(ii)).

When a drug is no longer marketed due to safety reasons, there may be a subset of patients for whom the benefits of treatment are believed to outweigh the risks and who lack satisfactory alternative therapies. Under proposed § 312.315(a)(3)(i), those patients could continue to receive the drug under an intermediate-size patient population IND for expanded access use.

This provision is also intended to allow uninterrupted therapy when an approved drug is not being manufactured in a manner consistent with the specifications on which the approval is based (good manufacturing practice (GMP) violations) and therefore cannot be marketed under the new drug application (NDA). Under proposed § 312.315(a)(3)(i), the drug could be made available to patients for whom the drug is a medical necessity until the GMP violations are addressed (assuming that, despite those violations, the product does not pose a risk that is unreasonable in the context of the disease or condition to be treated, per proposed § 312.305(a)(2)). If the product does pose a risk because of GMP concerns, proposed § 312.315(a)(3)(ii) could be used to make available an unapproved drug product containing the same active moiety (e.g., a drug product approved in another country).

Proposed § 312.315(a)(3)(ii) could also be used in a drug shortage situation to make available an unapproved drug containing the same active moiety as the approved drug that is in short supply (e.g., a drug product approved in another country).

1. Expanded Access for Intermediate-Size Patient Populations—Criteria

In addition to the proposed criteria for all expanded access uses, proposed § 312.315(b) sets forth the criteria that apply specifically to expanded access use for intermediate-size patient populations.

- The first criterion requires that there be enough evidence that the drug is safe at the dose and duration proposed for expanded access use to justify a clinical trial of the drug in the approximate number of patients expected to receive the drug for expanded access use (proposed § 312.315(b)(1)).

In ordinary drug development, it is usual practice to gradually increase the number of subjects exposed to a drug (from first human exposure in a very small number of subjects through large phase 3 trials). This practice limits the risk from drugs that turn out to have significant adverse effects, as more and better information (e.g., about dosing) is obtained about the drug before larger numbers of subjects are treated. The same rationale would apply in the expanded access use setting. There should be more clinical experience for an intermediate-size patient population than for an individual patient, and the amount of clinical experience to justify expanded access use in a certain population should be roughly the same as would justify a clinical trial in that size population. FDA anticipates that the typical intermediate-size patient population treatment use IND or protocol will provide access to between 10 and 100 patients.

- The second criterion requires that there be at least preliminary clinical evidence of effectiveness of the drug or of a plausible pharmacologic effect of the drug to make expanded access use a reasonable therapeutic option in the anticipated patient population (proposed § 312.315(b)(2)).

2. Expanded Access for Intermediate-Size Patient Populations—Submission Requirements

In addition to the proposed submission requirements for all expanded access uses, proposed § 312.315(c) sets forth the submission requirements that apply specifically to expanded access use by intermediate-size patient populations. The expanded access use submission must do the following:

- State whether the drug is being developed or is not being developed and describe the patient population to be treated (proposed § 312.315(c)(1));
- Include an explanation by the sponsor, if the drug is not being actively developed, of why the drug cannot currently be developed for the expanded access use and under what circumstances the drug could be developed (proposed § 312.315(c)(2)); and

• Include an explanation by the sponsor, if the drug is being studied in a clinical trial, of why the patients to be treated cannot be enrolled in the clinical trial and under what circumstances the sponsor would conduct a clinical trial in these patients (proposed § 312.315(c)(3)).

3. Expanded Access for Intermediate-Size Patient Populations—Safeguards

Proposed § 312.315(d) sets forth the safeguards that apply specifically to expanded access use by intermediate-size populations. Upon review of the IND annual report, FDA will determine whether it is appropriate for the use to continue under this section. If the drug is not being actively developed or if the expanded access use is not being developed (but another use is being developed), FDA will consider whether it is possible to conduct a clinical study to develop the expanded access use for marketing (proposed § 312.315(d)(1)(i)). If the drug is being actively developed, FDA will consider whether providing the investigational drug for expanded access use is interfering with the clinical development of the drug (proposed § 312.315(d)(1)(ii)). As the number of patients enrolled increases, FDA will also consider whether to request that a sponsor submit a treatment IND or treatment protocol as described in § 312.320 for the expanded access use (proposed § 312.315(d)(1)(iii)). The sponsor is responsible for monitoring the expanded access protocol to ensure that licensed physicians comply with the protocol and the regulations applicable to investigators (proposed § 312.315(d)(2)).

H. Expanded Access Treatment IND or Treatment Protocol (Proposed § 312.320)

Proposed § 312.320 describes the treatment IND or treatment protocol mechanism that is currently provided in §§ 312.34 and 312.35. Proposed § 312.320 retains the basic terminology ''treatment IND'' and ''treatment protocol'' from current §§ 312.34 and 312.35.

1. Expanded Access Treatment IND or Treatment Protocol—Criteria

In addition to the proposed criteria for all expanded access uses, proposed § 312.320(a) provides the criteria that apply specifically to a treatment IND or treatment protocol.

Proposed § 312.320(a)(1) requires that either the drug is being investigated in a controlled clinical trial under an IND designed to support a marketing application for the expanded access use (proposed § 312.320(a)(1)(i)), or all clinical trials of the drug have been completed (proposed § 312.320(a)(1)(ii)).

In addition, the sponsor must be actively pursuing marketing approval of the drug for the expanded access use with due diligence (proposed § 312.320(a)(2)).

Proposed § 312.320(a)(3)(i) provides that, when the expanded access use is for a serious disease or condition, there must be sufficient clinical evidence of safety and effectiveness to support the expanded access use. Such evidence would ordinarily consist of data from phase 3 trials, but could consist of compelling data from completed phase 2 trials.

Proposed § 312.320(a)(2)(ii) provides that, when the expanded access use is for an immediately life-threatening disease or condition, the available scientific evidence, taken as a whole, provides a reasonable basis to conclude that the investigational drug may be effective for the expanded access use and would not expose patients to an unreasonable and significant risk of illness or injury. This evidence would ordinarily consist of clinical data from phase 3 or phase 2 trials, but could be based on more preliminary clinical evidence.

2. Expanded Access Treatment IND or Treatment Protocol—Submission Requirements

In addition to the proposed submission requirements for all expanded access uses, proposed § 312.320(b) states that the expanded access submission must include information adequate to satisfy FDA that the general criteria for expanded access use and those specific to the treatment IND or treatment protocol have been met.

3. Expanded Access Treatment IND or Treatment Protocol—Safeguards

Proposed § 312.320(c) provides a safeguard that applies specifically to treatment protocols. The sponsor is responsible for monitoring the treatment protocol to ensure that licensed physicians comply with the protocol and the regulations applicable to investigators.

I. Open-Label Safety Studies

The primary purpose of the treatment IND or treatment protocol is to make investigational drugs available to patients with serious or immediately life-threatening diseases or conditions when there is a reasonable evidentiary basis to support the use in a substantial population, but the evidence needed for marketing approval either has not been entirely collected or has been collected but not yet analyzed and reviewed by the agency.

FDA is concerned that sponsors have used programs other than treatment INDs or treatment protocols to make investigational drugs available to large populations for treatment use, particularly by identifying such programs as ''open-label safety studies.'' The goal of an open-label safety study is to better characterize the safety of a drug late in its development. However, in practice, many studies that are described as open-label safety studies have characteristics that appear to be more consistent with treatment INDs or treatment protocols. For example:

• The investigators are not selected by the sponsor but can be any physician (sometimes with specified qualifications),

• The population receiving the drug is quite large,

• Collection of data is minimal, and

• The studies may not generate the kind of reliable information that would be developed in a study designed to meaningfully assess safety endpoints.

Consequently, in the future, the agency intends to evaluate whether proposals for open-label safety studies should be treatment INDs or treatment protocols that would have to meet the criteria in proposed § 312.320. A study described as an open-label safety study that provides broad access to an investigational drug in the later stages of development, but lacks planned, systematic data collection and a design appropriate to evaluation of a safety issue is likely to be considered a treatment IND or treatment protocol. The agency believes treatment INDs or treatment protocols are more appropriate programs to provide treatment because the authorization for such expanded access uses will require a more formal review process that would explicitly consider the impact of expanded access on enrollment in clinical trials and the progress of drug development generally.

J. Continuation Phase of a Clinical Trial

The continuation phase of a clinical trial may have characteristics in common with open-label safety studies or expanded access, or both. In the continuation phase of a clinical trial, patients have the option of receiving the study drug after completing the controlled portion of the trial (continue on the study drug or cross over from a control treatment to the study drug), often as an inducement to enroll in the clinical study. All patients receive the study drug. The primary intent may be to develop additional safety data or to

treat the patient's condition. Notwithstanding the intent, however, because enrollment is limited to only clinical study participants, the use is considered a part of the clinical study rather than an expanded access use for purposes of proposed subpart I.

V. Legal Authority

The agency believes it has the authority to impose requirements regarding expanded access to investigational drugs under various sections of the act, including sections 505(i); 561; and 701(a) (21 U.S.C. 371(a)).

Section 505(i) of the act directs the agency[3] to issue regulations exempting from the operation of the new drug approval requirements drugs intended solely for investigational use by experts qualified by scientific training and expertise to investigate the safety and effectiveness of drugs. The proposed rule explains procedures for obtaining FDA authorization for expanded access uses of investigational drugs and factors relevant to making necessary determinations.

Section 561 of the act, added by FDAMA, provides significant additional authority for this proposed rule. Section 561(a) of the act states that FDA may, under appropriate conditions determined by the agency, authorize the shipment of investigational drugs for the diagnosis, monitoring, or treatment of a serious disease or condition in emergency situations. This proposed rule sets forth factors that the agency will consider in determining whether to authorize shipment of investigational drugs in emergency situations.

Section 561(b) of the act allows any person, acting through a physician licensed in accordance with State law, to request from a manufacturer or distributor an investigational drug for the diagnosis, monitoring, or treatment of a serious disease or condition if four conditions are met: (1) The physician must determine that the person has no comparable or satisfactory alternative therapy available and the probable risk to the person from the investigational drug is not greater than the probable risk from the disease or condition; (2) FDA must determine that there is sufficient evidence of safety and effectiveness to support the use of the investigational drug in the particular case; (3) FDA must determine that provision of the investigational drug will not interfere with the initiation, conduct, or completion of clinical investigations to support marketing approval; and (4) the sponsor or clinical investigator of the investigational drug submits a clinical protocol consistent with the provisions of section 505 of the act describing the use of the investigational drug in a single patient or a small group of patients. The proposed rule sets forth factors that FDA will consider in making the necessary determinations and explains the procedures and criteria for physicians, sponsors, and/or investigators to make the necessary representations and submissions to FDA.

Section 561(c) of the act specifically authorizes expanded access under a treatment IND if FDA makes the following determinations: (1) Under the treatment IND, the investigational drug is intended for use in diagnosing, monitoring, or treating a serious or immediately life-threatening disease or condition; (2) there is no comparable or satisfactory alternative therapy available to diagnose, monitor, or treat that stage of disease or condition in the population of patients to which the investigational drug is intended to be administered; (3) the investigational drug is already under investigation in a controlled clinical trial for the same use under an IND under section 505(i) of the act, or all clinical trials necessary for approval of that use of the investigational drug have been completed; (4) the sponsor of the controlled clinical trials is actively pursuing marketing approval of the investigational drug, with due diligence, for the same intended use; (5) provision of the investigational drug will not interfere with the enrollment of patients in ongoing clinical investigations under section 505(i) of the act; (6) in the case of serious diseases, there is sufficient evidence of safety and effectiveness to support the intended use; and (7) in the case of immediately life-threatening diseases, the available scientific evidence, taken as a whole, provides a reasonable basis to conclude that the investigational drug may be effective for its intended use and would not expose patients to an unreasonable and significant risk of illness and injury. The proposed rule sets forth factors that FDA will consider in making the necessary determinations.

Section 561 of the act further requires that protocols submitted under section 561 be subject to section 505(i) of the act including regulations issued under section 505(i). Section 561(d) of the act permits the agency to terminate expanded access for failure to comply with the requirements of section 561 of the act. The proposed rule sets forth the conditions under which FDA will place an expanded access use on clinical hold.

In this proposed rule, the agency proposes three categories of expanded access. While authority for individual patient access is based on section 561(b) of the act, and authority for treatment INDs and treatment protocols is based on section 561(c) of the act, there is also authority in the statute for FDA to issue regulations for intermediate-size patient populations. Section 561(b)(4) of the act requires submission of a protocol for the expanded access use that is consistent with the requirements of the IND regulations describing the use of the investigational drug in a single patient or a small group of patients. The provisions of the proposed rule concerning expanded access for intermediate-size patient populations address the use of the investigational drug in the small groups of patients mentioned in the statute.

Section 701(a) of the act provides general authority to issue regulations for the efficient enforcement of the act. By clarifying the criteria and procedures relating to expanded access to investigational products, this proposed rule is expected to aid in the efficient enforcement of the act.

VI. Environmental Impact

The agency has determined under 21 CFR 25.30(h) that this action is of a type that does not individually or cumulatively have a significant effect on the human environment. Therefore, neither an environmental assessment nor an environmental impact statement is required.

VII. Analysis of Economic Impacts

FDA has examined the impacts of the proposed rule under Executive Order 12866 and the Regulatory Flexibility Act (5 U.S.C. 601–612), and under the Unfunded Mandates Reform Act of 1995 (Public Law 104–4). Executive Order 12866 directs agencies to assess all costs and benefits of available regulatory alternatives and, when regulation is necessary, to select regulatory approaches that maximize net benefits (including potential economic, environmental, public health and safety, and other advantages; distributive impacts; and equity). The agency believes that this proposed rule is not an economically significant regulatory action as defined by the Executive Order.

The Regulatory Flexibility Act requires agencies to analyze regulatory options that would minimize any significant impact of a rule on small

[3] In light of section 903(d) of the act (21 U.S.C. 393(d)) and the Secretary's delegations to the Commissioner of Food and Drugs, statutory references to ''the Secretary'' in the discussion of legal authority have been changed to ''FDA'' or ''the agency.''

entities. Currently, the agency does not believe that the proposed rule will have a significant economic impact on a substantial number of small entities. Nevertheless, we recognize our uncertainty regarding the number and size distribution of affected entities, as well as the economic impact of the proposed rule on those entities. Therefore, this economic analysis, together with other relevant sections of this document, constitutes the agency's initial regulatory flexibility analysis. The agency specifically requests detailed public comment regarding the number of affected small entities as well as the potential economic impact of the proposed rule on those entities.

Section 202(a) of the Unfunded Mandates Reform Act of 1995 requires that agencies prepare a written statement, which includes an assessment of anticipated costs and benefits, before proposing ''any rule that includes any Federal mandate that may result in an expenditure by State, local, and tribal governments, in the aggregate, or by the private sector, of $100,000,000 or more (adjusted annually for inflation) in any one year.'' The current threshold after adjustment for inflation is approximately $122 million, using the most current (2005) Implicit Price Deflator for the Gross Domestic Product. FDA does not expect this proposed rule to result in any 1-year expenditure that would meet or exceed this amount.

A. Objectives of the Proposed Action

FDA is proposing this action to describe in greater detail all of the ways patients may obtain expanded access to investigational drugs for treatment use. Specifically, the proposed rule establishes eligibility criteria, submission requirements, and safeguards for the expanded access use of investigational drugs by individual patients, including in emergencies; intermediate size patient populations; and larger populations under a treatment protocol or treatment IND. The proposal is also intended to increase public knowledge and awareness of expanded access and, thus, to make investigational drugs more widely available. In addition, by establishing clear eligibility criteria and submission requirements, the proposed rule would ease administrative burdens on physicians seeking investigational drugs for their patients and on sponsors who are willing to make promising unapproved therapies available for treatment use. The agency believes that the proposed rule would achieve these objectives in a way that fairly addresses the interests of patients, drug sponsors, and society as a whole.

B. Nature of the Problem Being Addressed

The fundamental problem addressed by the proposed rule is one of incomplete information. In some circumstances, a lack of clearly defined eligibility criteria and submission requirements has created inefficiencies that limit patient access to potentially beneficial investigational drugs. The proposed rule is also intended to address concerns that, historically, cancer and AIDS patients have had better access to investigational drugs than patients with other serious diseases or conditions, and that patients under the care of physicians based in academic medical centers are more likely to obtain such access than patients whose physicians practice outside such centers. In addition, the lack of clearly defined eligibility criteria and submission requirements has led some physicians and drug sponsors to devote more resources than necessary to the preparation of expanded access submissions. Through this proposed rule, the agency seeks to correct these shortcomings.

The proposed rule establishes general eligibility criteria, submission requirements, and safeguards for the expanded access use of investigational drugs. The requirements that apply to all types of expanded access use are described in detail in section IV.E of this document. The proposed rule also describes more specific eligibility criteria, submission requirements, and safeguards for three specific categories of expanded access: (1) Expanded access for individual patients, (2) expanded access for intermediate-size patient populations, and (3) expanded access under a treatment protocol or treatment IND. These types of expanded access uses are described in detail in sections IV.F, IV.G, and IV.H of this document, respectively.

C. Baseline for the Analysis

During the period 1997 through 2005, FDA received an average of 2,046.6 INDs per year. Of this number, on average, approximately 659, or 32.2 percent (0.322 = 659 / 2,046.6) were individual patient or emergency INDs. In addition, FDA received approximately 4.6 treatment IND or treatment protocol submissions per year during this time period. Thus, treatment IND or treatment protocol submissions represent about 0.2 percent (0.022 = 4.6 / 2,046.6) of all INDs received by the agency each year. Because expanded access for intermediate size patient populations is not currently established in regulation, FDA does not have a record of the number of submissions in this category. However, based on an internal survey of drug review divisions, FDA estimates that approximately 55 other expanded access submissions were received each year between 2000 and 2002. While it is not possible to determine the precise number that would be considered intermediate size patient population expanded access submissions, FDA experts believe that most of the 55 other submissions each year would fall under this category. Thus, approximately 2.7 percent (0.0268 = 55 / 2,046.6) of all INDs received by FDA each year may be associated with intermediate size patient population expanded access requests. The information presented above is summarized in table 1 of this document.

TABLE 1.—BASELINE DATA FOR THE NUMBER OF INDS AND EXPANDED ACCESS REQUESTS BY CATEGORY

Category	Total INDs	Individual Patient or Emergency IND	Treatment IND or Protocol	Other
Number	2,046.6	659.0	4.6	55.0
Percent of all INDs	100%	32.2%	0.2%	2.7%

D. Nature of the Impact

The proposed rule would affect patients who lack effective therapeutic alternatives and may benefit from access to investigational drugs, physicians attempting to obtain investigational drugs for their patients, drug sponsors who make investigational drugs available to patients, and FDA in its oversight role in the process for making investigational drugs available for expanded access use. As discussed

further in section I.D of this document, a major purpose of this proposed rule is to expand access to investigational drugs for patients with serious and immediately life-threatening conditions who lack satisfactory therapeutic alternatives. Therefore, FDA anticipates that the proposed rule would increase the number of patients who obtain access to investigational drugs for treatment use. This increase in volume would lead to more expanded access submissions from sponsors and physicians seeking investigational drugs for their patients and, as a consequence, would require FDA to review more submissions. Given the relatively small percentage of all INDs received by the agency that are associated with expanded access use submissions, FDA expects that the overall impact of the proposed rule will not be significant.

The proposed rule also attempts to minimize the potential administrative burdens for physicians, sponsors, and FDA that would result from an increased volume of patients obtaining investigational drugs for expanded access use. The proposed rule encourages the consolidation of multiple individual patient INDs or protocols for a given use under an intermediate-size patient population IND or protocol (see sections VII.D.2 and VII.F of this document for additional discussion). By reducing the total volume of submissions that would have been prepared if all patients were to obtain a drug under individual patient INDs or protocols, consolidation will limit the additional administrative burdens from increased patient access. In addition, by explicitly clarifying the eligibility criteria and submission requirements for expanded access, the proposed rule should make the process of obtaining access to investigational drugs more efficient for all affected parties.

It is expected that any increase in the volume of submissions would result primarily from greater numbers of patients obtaining investigational drugs under expanded access INDs or protocols for individual patients and intermediate-size patient populations. Because this proposed rule does not significantly change the existing regulation concerning treatment INDs or treatment protocols, the number of patients receiving investigational drugs under these mechanisms should be largely unaffected.

1. Individual Patient Expanded Access Submissions

By increasing awareness of the ways individual patients can obtain expanded access to investigational drugs for treatment use, and decreasing the perceived difficulty of obtaining such access, the proposed rule should increase the number of individual patients seeking access to investigational drugs. FDA anticipates that this increase in individual patient expanded access submissions would be greatest in the years immediately following implementation of a final rule and would at some point level off, or possibly even decline. This leveling off or decline would occur when a significant volume of individual patient expanded access has accumulated for a variety of drugs, and the individual patient expanded access INDs or protocols for those drugs are then replaced with intermediate-size patient population INDs or protocols that enroll multiple subjects. Making the transition from multiple individual patient INDs or protocols to a single intermediate-size patient population IND or protocol should reduce the overall administrative burden associated with making a particular investigational drug available for treatment use.

From 1997 to 2005, FDA received, on average, approximately 659 individual patient and emergency IND submissions per year. Although FDA is confident this proposed rule would increase this volume, it is difficult to predict with precision the extent of the increase. There is uncertainty concerning the extent to which patients who desire expanded access to investigational drugs are unable to obtain them; the extent to which better information about the mechanisms and processes for obtaining access to investigational drugs will stimulate more patients, or their physicians, to seek investigational drugs for expanded access use; and the extent to which drug manufacturers will be willing to make investigational drugs more broadly available for expanded access use. Although FDA is confident there will be an increase in the volume of individual patient expanded access use if this rulemaking is finalized, because of these uncertainties the agency can provide only an estimate of the range of potential increase. FDA believes, after publication of a final rule, that it is reasonable to anticipate a 40 to 60 percent increase in the volume of individual patient expanded access submissions by year 3. As discussed previously in this document, we anticipate that growth would be most rapid in the years immediately following publication of a final rule and would eventually plateau, or possibly even decline. The implications of these assumptions for the total number of individual patient expanded access submissions are summarized in table 2 of this document.

TABLE 2.—EXPECTED PERCENT INCREASE AND ESTIMATED NUMBER OF INDIVIDUAL PATIENT EXPANDED ACCESS SUBMISSIONS

Year After Implementation of Final Rule	Expected Percent Increase in Individual Patient Submissions	Expected Number of Individual Patient Submissions[1]
1	20% to 40%	791 to 923
2	30% to 50%	857 to 988
3	40% to 60%	923 to 1,054
4	0%	923 to 1,054
5	0%	923 to 1,054

[1]Based on the current average of 659 individual patient treatment use submissions per year and the estimated percent increases in column 2.

2. Intermediate Size Patient Population Expanded Access Submissions

Although intermediate-size patient population expanded access has not previously been described in regulation, this general type of mechanism has been used informally to make investigational drugs available for treatment use. Based on an internal survey of review divisions, FDA estimates that for the period 2000 through 2002 it received approximately 55 submissions per year that would be considered intermediate size patient population expanded access submissions under the proposed criteria. The agency anticipates that this proposed rule would increase the number of such submissions. Because this previously informal mechanism will be described in regulation for the first time, there will be greater awareness, which is likely to stimulate submissions. In addition, the anticipated increase in volume of individual patient expanded access submissions discussed previously in this document is expected to increase the number of intermediate size patient population expanded access submissions because the proposed rule encourages the consolidation of multiple individual patient INDs or protocols for a given expanded access use.

The extent to which submissions for expanded access for intermediate-size patient populations will increase is uncertain. Section 312.315 of the proposed rule concerns expanded access for intermediate-size patient populations. This section provides that

FDA may ask a sponsor to consolidate expanded access under this section when the agency has received a significant number of requests for individual patient expanded access to an investigational drug for the same use. FDA does not have historical information that would permit us to accurately predict what portion of individual patient expanded access submissions are likely to be appropriate for consolidation. Based on our experience, we believe that many of the individual patient expanded access submissions we receive will be appropriate for consolidation. However, some individual patient expanded access submissions will be for expanded access uses that are sufficiently rare that it is unlikely that there will be enough similar uses to consolidate them under an intermediate-size patient population IND or protocol. There is also uncertainty about the extent to which sponsors will be willing to make investigational drugs available for expanded access use under intermediate-size patient population INDs or protocols. Although FDA is confident that there will be growth in the volume of intermediate-size patient population expanded access INDs or protocols, because of the uncertainties identified, we can provide only an estimate of the range of potential increase. FDA believes it is reasonable to anticipate a 25 to 50 percent growth in the volume of submissions for intermediate-size population expanded access INDs or protocols over a 5-year period.

Compared to the growth in individual patient expanded access submissions, this increase is likely to be more gradual in the years immediately following implementation of a final rule, and will increase more sharply after 2 to 3 years as some of the increase in volume of individual patient expanded access submissions is shifted to intermediate size population INDs or protocols. As in the case of expanded access for individual patients, growth in the number of submissions is expected to plateau or even decline after a few years. The implications of these assumptions for the number of individual patient expanded access submissions are summarized in table 3 of this document.

TABLE 3.—EXPECTED PERCENT INCREASE AND ESTIMATED NUMBER OF INTERMEDIATE SIZE PATIENT POPULATION EXPANDED ACCESS SUBMISSIONS

Year After Implementation of Final Rule	Expected Percent Increase in Intermediate Size Patient Population Submissions	Expected Number of Intermediate Size Patient Population Submissions[1]
1	5% to 10%	58 to 61
2	10% to 20%	61 to 66
3	20% to 40%	66 to 77
4	25% to 50%	69 to 82
5	0%	69 to 82

[1]Based on the current average of 55 intermediate size patient population submissions per year and the estimated percent increases in column 2.

3. Expanded Access Under Treatment INDs and Treatment Protocols

The number of treatment INDs and treatment protocols should be largely unaffected by the proposed rule. The concept of large access programs is well established and most drugs that meet an unmet medical need for a serious or immediately life-threatening condition have had some kind of large access program late in their development. Therefore, the number of large access programs is primarily a function of the number of new drugs to treat serious and immediately life-threatening conditions that reach the latter stages of drug development (e.g., become NDA submissions). This rule is unlikely to influence that number.

As discussed previously in this document, sponsors have instituted large expanded access programs under treatment INDs or treatment protocols or under less formal open-label or open-access protocols (see section IV.I of this document). The agency intends to be more vigilant in ensuring that a use of an investigational drug that has the characteristics of a treatment IND or treatment protocol is submitted and authorized as such, rather than as an open-label protocol. While this increased vigilance may increase the number of treatment INDs or treatment protocols, any increase will be primarily attributable to reclassifying open-label safety studies as treatment INDs or treatment protocols rather than a net increase in the overall number of large access programs. This reclassification should also improve safety monitoring of large access programs without significantly increasing administrative costs, because the costs for a treatment IND or treatment protocol and an open-label protocol are similar.

Reclassification of an open-label protocol as a treatment IND or treatment protocol may also increase publicity for, and awareness of, the access program. Sponsors of treatment INDs or treatment protocols are required to list those programs at *http://www.clinicaltrials.gov*, a Web site maintained by the National Institutes of Health as a resource for patients seeking to enroll in clinical trials or obtain access to investigational drugs for treatment use. The additional exposure generated by this site may attract more patients than would have had access under an open-label protocol. As a result, any given treatment IND or treatment protocol may be somewhat more costly than a less publicized open-label protocol due to the volume of patients enrolled. FDA is not able to predict the impact on patient volume as a result of reclassifying open-label or open-access protocols as treatment INDs or treatment protocols. However, FDA anticipates that there would be some economies of scale, so that the incremental costs would be relatively small on a per-patient basis. FDA believes any added costs would be justified by the potentially greater number of patients who would benefit from access to investigational drugs.

E. Benefits of the Proposed Rule

Because FDA currently has no data that would allow us to predict the extent to which the proposed amendments to existing IND regulations would generate direct benefits for consumers, it is not possible to accurately quantify the magnitude of any expected incremental benefits at this time. The number of patients obtaining expanded access to investigational drugs is expected to increase. However, because eligible patients will have serious or immediately life-threatening conditions that have failed to respond to available therapies, and because the investigational drugs are unproven, FDA cannot predict the extent to which individual patients would benefit from access to these drugs. Thus, the following discussion describes, in general terms, the nature of the potential benefits associated with the proposed rule.

The benefits of the proposed rule are expected to result from improved patient access to investigational drugs generally and from expanded access being made available for a broader variety of disease conditions and

treatment settings. In particular, the clarification of eligibility criteria and submission requirements would enhance patient access by easing the administrative burdens on individual physicians seeking investigational drugs for their patients and on sponsors who make investigational drugs available for expanded access use. Expanded access to investigational drugs may generate both private and social benefits. Private benefits would accrue to individual patients receiving drugs for expanded access use, whereas social benefits would accrue if these private benefits are also valued by society at large, or if any information obtained contributes to the development of new therapies generally.

The proposed rule is also designed to address concerns that many physicians and their patients, particularly those outside of academic medical centers, are unaware of the availability of investigational drugs for expanded access use. In FDAMA, Congress included language in section 561(c) of the act to authorize the Secretary to inform medical associations, medical societies, and other appropriate persons of the availability of investigational drugs under treatment INDs or treatment protocols. FDA believes that this action, along with detailed eligibility criteria and submission requirements established in the proposed rule, would improve access to investigational drugs and result in making expanded access use more widely available to patients regardless of treatment setting.

In formulating the proposed rule, FDA considered its statutory mandate, the interests of individuals and special patient populations, drug sponsors, and the general public. The agency found that in many situations, individuals or special patient populations have benefited from increased access to a drug that has not yet been approved for marketing (e.g., in the case of cancer or HIV therapies, etc.). These individuals or patient groups generally have serious or immediately life-threatening conditions and have not responded to available therapies or cannot participate in ongoing clinical trials for some reason.

On the other hand unrestricted access to investigational drugs for treatment use could negatively affect enrollment in the clinical trials required to demonstrate safety and efficacy in support of new drug marketing applications. If expanded access to investigational drugs were to adversely affect the marketing approval process, the general population would experience diminished social benefits due to the reduced or delayed availability of new therapies approved for marketing by FDA.

The proposed rule addresses these competing interests by allowing investigational drugs to be made available for expanded access use only if providing the drug for the requested use will not interfere with the initiation, conduct, or completion of clinical investigations that could support marketing approval, or otherwise compromise the potential development of the expanded access use. In this way, the proposed rule effectively balances the interests of those patient populations who would benefit from having greater access to investigational drugs, with the broader interests of society in having safe and effective new therapies approved for marketing and widely available.

The agency is also aware that allowing expanded access to investigational drugs before they are fully evaluated for safety may have adverse consequences for the seriously ill patients who receive them. The safeguards in the proposed rule are also designed with this concern in mind. Authorization of a particular expanded access use is generally contingent upon a number of factors, including some evidence of the drug's safety and effectiveness, obtaining the informed consent of the patient, approval of an IRB, and a careful assessment of the potential risks and benefits to the patient. In addition, the proposed rule would place limits on the scope and duration of certain types of expanded access use, require that sponsors of such INDs or protocols monitor the expanded access use and comply with safety and annual reporting requirements for INDs, and subject ongoing INDs or protocols to periodic reassessment. The agency believes these safeguards would adequately protect the safety and welfare of patients who would seek, and may benefit from, expanded access to investigational drugs.

F. Costs of the Proposed Rule

To the extent that the proposed rule results in an increase in the number of expanded access submissions, drug sponsors and physicians requesting investigational drugs on behalf of their patients will incur some additional costs. Because the proposed rule does not include any mandatory reporting requirements, the agency believes that the one-time costs associated with this rule will be negligible. Thus, the incremental burden imposed by this proposed rule will be in the form of additional annual or recurring costs associated with the increased number of expanded access submissions estimated previously in this document.

The agency estimates that preparation and submission of an individual patient expanded access submission would require a total of approximately 8 hours. This time burden would be divided among physicians (approximately 15 percent or 1.2 hours) and nurses, nurse practitioners, or medical administrators (approximately 85 percent or 6.8 hours). According to the U.S. Department of Labor, Bureau of Labor Statistics,[4] total employer costs per hour worked for employee compensation for registered nurses in the health care and social assistance sector was $36.21 as of June 24, 2004. Thus, the cost of the estimated 6.8 hours of nurse time required to prepare and submit an individual patient expanded access submission would be approximately $245 ($36.21 per hour x 6.8 hours).

Historically, most of the treatment use requests submitted to the agency have been prepared by physicians in the hematology/oncology specialty category. Data available on the Internet indicate that the median expected total compensation for a hematologist/oncologist in the United States was $287,016 as of October 2004.[5] This median total compensation figure corresponds to approximately $138 per hour ($137.99 = $287,016 / 2,080 hours). Thus the cost for the 1.2 hours of physician time required to prepare and submit an individual patient expanded access submission is about $165 ($138 per hour x 1.2 hours). Therefore, the agency estimates that the total cost to prepare and submit an individual patient expanded access submission would be about $410 ($410 = $245 + $165). Applying this cost figure to the number of additional individual patient expanded access submissions estimated previously in this document suggests the pattern of incremental annual costs summarized in table 4 of this document.

[4]See *http://www.bls.gov/news.release/ecec.toc.htm*. (FDA has verified the Web site address, but FDA is not responsible for any subsequent changes to the Web site after this document publishes in the **Federal Register**.)

[5]See *http://swz.salary.com/salarywizard/layouthtmls/swzl_compresult_national_HC07000054.html*. (FDA has verified the Web site address, but FDA is not responsible for any subsequent changes to the Web site after this document publishes in the **Federal Register**.)

TABLE 4.—NUMBER OF ADDITIONAL INDIVIDUAL PATIENT EXPANDED ACCESS SUBMISSIONS AND ESTIMATED ANNUAL COSTS

Year After Implementation of Final Rule	Expected Increase in the Number of Individual Patient Submissions[1]	Expected Cost of Additional Individual Patient Submissions[2]
1	132 to 264	$54,120 to $108,240
2	198 to 329	$81,180 to $134,890
3	264 to 395	$108,240 to $161,950
4	264 to 395	$108,240 to $161,950
5	264 to 395	$108,240 to $161,950

[1]Based on increases in the number of individual patient expanded access submissions implied by the estimates presented in table 2 of this document.

[2]Based on an estimated cost of $410 per individual patient expanded access submission.

Preparation and submission of an intermediate size patient population expanded access IND or protocol is expected to require a total of about 120 hours of staff time. This time burden would be divided between a Director of Clinical Research, typically a medical doctor (approximately 50 percent or 60 hours), a Director of Regulatory Affairs (approximately 20 percent or 24 hours), and a Clinical Research Associate (approximately 30 percent or 36 hours).

Information available on the Internet and from industry sources suggests that the average salary for a Director of Clinical Research is about $200,000 per year.[6] Assuming that benefits represent approximately 30 percent of salary implies a total annual compensation estimate of $260,000. This translates into an estimated hourly total compensation figure of about $125 ($260,000 / 2,080 hours). Thus, the cost associated with the 60 hours of Clinical Research Director time required to prepare and submit an intermediate size patient population expanded access submission is approximately $7,500 (60 hours x $125).

Information available on the Internet and from industry sources also indicates that the average salary for a Director of Regulatory Affairs is approximately $160,000 per year.6 Assuming that benefits represent about 30 percent of this salary implies a total annual compensation estimate of $208,000. This translates into an estimated hourly total compensation figure of about $100 ($209,000 / 2,080 hours). Thus, the cost associated with the 24 hours of Director of Regulatory Affairs time required to prepare and submit an intermediate size patient population expanded access submission is approximately $2,400 (24 hours x $100).

Finally, information available on the Internet indicates that the median total compensation for a Clinical Research Associate is approximately $70,000 per year.[6] This translates into an estimated hourly total compensation figure of about $33.65 ($70,000 / 2,080 hours). Thus, the cost associated with the 36 hours of Clinical Research Associate time required to prepare and submit an intermediate size patient population expanded access submission is approximately $1,200 (36 hours x $33.65).

Based on the information presented, the agency estimates that the total cost to prepare and submit an intermediate size patient population expanded access submission would be approximately $11,100 ($11,100 = $7,500 + $2,400 + $1,200). Applying this figure to the increases in the number of intermediate size patient population expanded access submissions estimated previously in this document suggests the pattern of annual cost increases summarized in table 5 of this document.

TABLE 5.—NUMBER OF ADDITIONAL INTERMEDIATE SIZE PATIENT POPULATION EXPANDED ACCESS SUBMISSIONS AND ESTIMATED ANNUAL COSTS

Year After Implementation of Final Rule	Expected Increase in the Number of Intermediate Size Patient Population Submissions[1]	Expected Cost of Additional Intermediate Size Patient Population Submissions[2]
1	3 to 6	$33,300 to $66,600
2	5 to 11	$55,500 to $122,100
3	11 to 22	$122,100 to $244,200
4	14 to 27	$155,400 to $299,700

TABLE 5.—NUMBER OF ADDITIONAL INTERMEDIATE SIZE PATIENT POPULATION EXPANDED ACCESS SUBMISSIONS AND ESTIMATED ANNUAL COSTS—Continued

Year After Implementation of Final Rule	Expected Increase in the Number of Intermediate Size Patient Population Submissions[1]	Expected Cost of Additional Intermediate Size Patient Population Submissions[2]
5	14 to 27	$155,400 to $299,700

[1]Based on increases in the number of intermediate size patient population expanded access submissions implied by the estimates presented in table 3 of this document.

[2]Based on an estimated cost of $11,000 per intermediate size patient population expanded access submission.

For reasons discussed previously in this document, the agency does not expect that the proposed rule will have an impact on the overall number of treatment INDs or treatment protocols. Therefore, FDA does not expect the provisions of this proposed rule regarding treatment INDs or treatment protocols to impose any incremental cost burden.

The total estimated annual and annualized cost burdens associated with this proposed rule are summarized in table 6 of this document.

TABLE 6.—COST SUMMARY

Year After Implementation of Final Rule	One-Time Cost	Annual Cost	Annualized Cost[1]
1	$0	$87,240 to $174,840	$87,240 to $174,840
2	$0	$136,680 to $256,990	$136,680 to $256,990
3	$0	$230,340 to $406,150	$230,340 to $406,150
4	$0	$263,340 to $461,650	$263,340 to $461,650
5	$0	$263,340 to $461,650	$263,340 to $461,650

[1]Since estimated one-time costs are negligible, annual costs and annualized costs will be the same regardless of the interest rate.

For reasons discussed previously in this document, the agency expects that the total one-time costs of the proposed

[6]See *http://www.executivesonly.com/preview/exresults.cfm* under the Pharmaceutical specialty category. Viewed January 3, 2005. (FDA has verified the Web site address, but FDA is not responsible for any subsequent changes to the Web site after this document publishes in the **Federal Register**.)

rule will be negligible. FDA expects that the annual and annualized costs of this proposed rule will range from a low of about $87,000 to $175,000 in the first year following publication of any final rule based on this proposal, to a high of about $263,000 to $406,000 in the fourth and fifth years. These estimates suggest total annual and annualized costs for the proposed rule of between $1.0 and $1.8 million for the 5-year period following implementation of any final rule based on this proposal.

The agency expects that the estimated incremental cost burdens associated with this proposed rule are likely to be widely dispersed among affected entities for several reasons. First, given the historical volume of various types of treatment use submissions, the agency believes that a particular drug sponsor—or a physician acting on behalf of a patient—would submit a request for expanded access to investigational drugs fairly infrequently. Second, as noted previously, the proposed rule encourages the consolidation of multiple expanded access INDs or protocols for individual patients for a particular expanded access use under an intermediate size patient population expanded access IND or protocol. Such consolidation should, to some extent, offset incremental administrative burdens caused by increased patient access. Making the transition from multiple individual patient expanded access INDs or protocols to a single IND or protocol for an intermediate size patient population should reduce for sponsors the administrative burdens associated with making a drug available for expanded access use. In addition, provisions of the proposed rule are designed to minimize the amount of information and paperwork required to support a particular expanded access request. Physicians and drug sponsors would need to review the rule to become familiar with its provisions and to gather the evidence and information necessary to support an expanded access submission. However, in instances where a current IND already exists, a sponsor need only submit an amendment describing the information relevant to the expanded access protocol. Also, another sponsor or individual physician acting on behalf of a patient may, with the written permission of the original sponsor, reference information in the current IND already on file. The agency believes that a majority of expanded access submissions would have such a right of reference, either because the sponsor is also the drug developer or the developer would generally be willing to grant the request. To the extent that these provisions minimize the informational burden on potential sponsors or physicians, the proposed rule would enhance both efficiency and cost effectiveness.

G. Minimizing the Impact on Small Entities

The agency does not believe the proposed rule will have a significant economic impact on a substantial number of small entities. Nevertheless, we recognize our uncertainty regarding the number and size distribution of affected entities, as well as the economic impact of the proposed rule on those entities. Therefore, the agency specifically requests detailed public comment on these issues.

Agency records indicate that the majority of submissions for treatment use of investigational drugs (about 78 percent) are submitted by commercial drug sponsors. Other entities making treatment use submissions include government agencies (approximately 14 percent), individual physicians (7 percent), and academic institutions (1 percent). Thus, the agency believes that the vast majority (92 percent) of sponsors of expanded access INDs or protocols (consisting of commercial drug sponsors or government agencies) would not be considered small entities. The remaining 8 percent of treatment use submissions are made by individual physicians and academic institutions that the agency believes would meet Small Business Administration small business criteria.

Of the average of 659 individual patient treatment use submissions submitted annually, very few are associated with commercial sponsors. The vast majority are submitted by individual physicians and various other unidentified sponsors for research purposes. Because nearly all individual patient treatment use submissions are made by various types of entities for research purposes, the agency believes that most of these entities would be classified as small entities.

Because there is currently no formal mechanism in place for tracking the other types of expanded access (e.g., intermediate size patient population submissions), no data exist that would allow the agency to identify the number of sponsors in this category that would qualify as small entities.

Thus, while highly uncertain, the agency believes that at least some of the entities submitting expanded access requests would qualify as small entities. Because of this uncertainty, the agency specifically requests detailed public comment regarding the number and size distribution of entities affected by the proposed rule. As discussed in section VII.E of this document, the agency expects that any incremental burden associated with the proposed rule will be small and widely dispersed among affected entities.

FDA considered several alternatives to the proposed rule. They are discussed in the following paragraphs.

1. Do Not Propose Implementing Regulations for the Expanded Access Provisions of FDAMA

FDAMA revised the act to specifically authorize the use of investigational new drugs by licensed physicians to diagnose, monitor, or treat individual patients who have a serious disease or condition if, among other things, the physician determines that the person has no comparable or satisfactory alternative therapy to diagnose, monitor, or treat the disease or condition, and that the probable risk from the investigational drug is not greater than the probable risk from the disease or condition; and FDA determines that there is sufficient evidence of safety and effectiveness to support the use of the investigational drug. FDAMA also largely incorporated into the act FDA's current regulation concerning treatment INDs or treatment protocols under which large populations currently receive investigational drugs for treatment use. Because FDAMA did not require that FDA adopt implementing regulations, the agency could have chosen not to do so.

However, the agency believes that implementing regulations would further improve expanded access to investigational drugs for treatment use. One of the major criticisms about access to investigational drugs is that the criteria for authorizing access are unclear and that there is not broad knowledge among affected, or potentially affected, parties about the mechanisms or procedures to obtain access. FDA believes the proposed regulations are needed to address these concerns. The regulations provide to sponsors, patients, and licensed physicians who will be seeking investigational drugs for their patients clear direction about the criteria for authorizing expanded access and what information must be submitted to the agency to enable it to evaluate a proposed expanded access submission. Clearer direction and greater knowledge of the mechanisms and procedures for obtaining investigational drugs for expanded access use should reduce barriers to access.

2. Propose a Regulation Describing Only Individual Patient Expanded Access and the Treatment IND or Treatment Protocol

As discussed in the previous paragraphs, FDAMA specifically authorized the use of investigational new drugs by licensed physicians to diagnose, monitor, or treat individual patients in certain circumstances. FDAMA also essentially repeated FDA's current regulation concerning treatment INDs or treatment protocols under which large populations currently receive investigational drugs for treatment use.

FDA could have chosen to adopt regulations that described only these two categories of expanded access. However, FDA has had a long history of using an informal mechanism to make investigational drugs available to intermediate size patient populations. This mechanism would not be appropriate for either expanded access for individual patients or for treatment INDs or treatment protocols. The agency concluded that, consistent with the terminology of section 561(b)(4) of the act, it would be preferable to establish an intermediate category for expanded access, with additional criteria and monitoring requirements, that would be used for more than an individual patient, but fewer than the large numbers of patients in treatment INDs or treatment protocols.

In FDA's experience, there is often a need for a middle ground between an individual patient IND or protocol and a treatment IND or treatment protocol. For some drugs in development, there is considerable demand for expanded access before the use meets the criteria for a treatment IND or treatment protocol. There are also situations in which investigational drugs that are not being actively developed are the best available therapy for a significant number of patients and should be made available to patients under an expanded access process. In these situations, making the drug available under a series of individual patient expanded access INDs or protocols is burdensome on physicians, sponsors, and FDA, and makes it difficult to monitor the expanded access use to identify significant safety concerns such as serious adverse events.

Describing this intermediate category in regulation is also consistent with FDA's goal of maximizing awareness of expanded access programs by being more transparent about the processes for making drugs available for expanded access. As stated previously, FDA has used this intermediate category informally in the past and believes it will have reason to use this category in the future. Therefore, FDA believes it is appropriate to formalize and fully describe in regulation the intermediate expanded access category, as well as the two other categories of expanded access.

3. Propose a Regulation Describing More Than Three Expanded Access Categories

FDA also considered proposing a rule that would include more than three expanded access categories, but rejected this alternative. In internal discussions, FDA found that the distinctions between the proposed categories and the additional categories it considered were unclear. FDA was concerned that the additional categories would create confusion, rather than provide the clarity that is the goal of the proposed regulations. FDA concluded that the additional categories could be merged into the three proposed categories and that these categories will be able to provide access to investigational drugs in all situations FDA is likely to encounter.

VIII. Paperwork Reduction Act of 1995

This proposed rule contains collections of information that are subject to review by the Office of Management and Budget (OMB) under the Paperwork Reduction Act of 1995 (44 U.S.C. 3501–3520). ''Collection of information'' includes any request or requirement that persons obtain, maintain, retain, or report information to the agency, or disclose information to a third party or to the public (44 U.S.C. 3502(3) and 5 CFR 1320.3(c)). The title, description, and respondent description of the information collection are shown in the following paragraphs with an estimate of the annual reporting burden. Included in the estimate is the time for reviewing instructions, gathering and maintaining the data needed, and completing and reviewing the collection of information.

FDA invites comments on these topics: (1) Whether the proposed collection of information is necessary for proper performance of FDA's functions, including whether the information will have practical utility; (2) the accuracy of FDA's estimate of the burden of the proposed collection of information, including the validity of the methodology and assumptions used; (3) ways to enhance the quality, utility, and clarity of the information to be collected; and (4) ways to minimize the burden of the collection of information on respondents, including through the use of automated collection techniques and other forms of information technology, when appropriate.

Title: Expanded Access to Investigational Drugs for Treatment Use

Description: The proposed rule would clarify existing regulations and expand on them by adding new types of expanded access for treatment use. Under the proposal, expanded access to investigational drugs would be available to individual patients, including in emergencies; to intermediate size patient populations; and to larger populations under a treatment protocol or IND. The proposed rule is intended to improve access to investigational drugs for patients with serious or immediately life-threatening diseases or conditions who lack other therapeutic options and may benefit from such therapies.

A. The Proposed Rule

1. Submission Requirements for All Expanded Access Uses

Proposed § 312.305(b) describes the submission requirements applicable to all types of expanded access. Proposed § 312.305(b)(1) states that an expanded access submission is required for each type of expanded access. The submission may be a new IND or a protocol amendment to an existing IND. Information required for a submission may be supplied by referring to pertinent information contained in an existing IND if the sponsor of the existing IND grants a right of reference to the IND.

Proposed § 312.305(b)(2) describes the expanded access submission requirements. The following items must be included:

- A cover sheet (Form FDA 1571) meeting the requirements of § 312.23(a);
- The rationale for the intended use of the drug, including a list of available therapeutic options that would ordinarily be tried before resorting to the investigational drug or an explanation of why the use of the investigational drug is preferable to the use of available therapeutic options;
- The criteria for patient selection; or, for an individual patient, a description of the patient's disease or condition, including recent medical history and previous treatments used for the disease or condition;
- The method of administration of the drug, dose, and duration of therapy;
- A description of the facility where the drug will be manufactured;
- Chemistry, manufacturing, and controls information adequate to ensure the proper identification, quality, purity, and strength of the investigational drug;
- Pharmacology and toxicology information adequate to conclude that

the drug is reasonably safe at the dose and duration proposed for expanded access use (ordinarily, information that would be adequate to permit clinical testing of the drug in a population of the size expected to be treated); and

- A description of clinical procedures, laboratory tests, or other monitoring necessary to evaluate the effects of the drug and minimize its risks.

2. Individual Patient Expanded Access

Proposed § 312.310(b) contains additional submission requirements that apply to use of an investigational drug for the treatment of an individual patient by a licensed physician. The expanded access submission must include information adequate to satisfy FDA that the criteria for all expanded access uses and those specific to individual patient expanded access have been met. The individual patient expanded access criteria are: (1) The physician must determine that the probable risk to the person from the investigational drug is not greater than the probable risk from the disease or condition and (2) FDA must determine that the patient cannot obtain the drug under another type of IND.

Proposed § 312.310(b)(1) states that if the drug is the subject of an existing IND, the expanded access submission may be made by a commercial sponsor or by a licensed physician. Proposed § 312.310(b)(2) states that a sponsor may satisfy the submission requirements by amending its existing IND to include an individual patient expanded access protocol. Proposed § 312.310(b)(3) states that a licensed physician may satisfy the submission requirements by obtaining a right of reference to pertinent information in the IND and providing any other required information not contained in the IND (usually only the information specific to the individual patient).

3. Intermediate Size Patient Populations

Proposed § 312.315(c) states that an expanded access submission for an intermediate size patient population must include information adequate to satisfy FDA that the criteria for all expanded access uses and those specific to intermediate size patient populations have been met. The intermediate size patient population criteria are: (1) There is enough evidence that the drug is safe at the dose and duration proposed for treatment use to justify a clinical trial of the drug in the approximate number of patients expected to receive the drug for treatment use and (2) there is at least preliminary clinical evidence of effectiveness of the drug or of a plausible pharmacologic effect of the drug to make expanded access use a reasonable therapeutic option in the anticipated patient population.

Proposed § 312.315(c) contains additional submission requirements that apply to use of an investigational drug for intermediate size patient populations. The expanded access submission must state whether the drug is being developed or is not being developed and describe the patient population to be treated. If the drug is not being actively developed, the sponsor must explain why the drug cannot currently be developed for the expanded access use and under what circumstances the drug could be developed. If the drug is being studied in a clinical trial, the sponsor must explain why the patients to be treated cannot be enrolled in the clinical trial and under what circumstances the sponsor would conduct a clinical trial in these patients.

4. Treatment IND or Protocol

Proposed § 312.320 describes the treatment IND or treatment protocol currently codified in §§ 312.34 and 312.35. Proposed § 312.320(b) states that the expanded access submission must include information adequate to satisfy FDA that the criteria for all expanded access uses and those specific to the treatment IND or protocol have been met. The criteria specific to a treatment IND or treatment protocol are: (1) The drug is being investigated in a controlled clinical trial designed to support a marketing application for the expanded access use or all clinical trials of the drug have been completed, (2) the sponsor is pursuing marketing approval of the drug for the expanded access use with due diligence, and (3) there is sufficient clinical evidence of safety and effectiveness to support the treatment use. Such evidence would ordinarily consist of data from phase 3 trials, but could consist of compelling data from completed phase 2 trials. When the expanded access use is for an immediately life-threatening disease or condition, the available scientific evidence, taken as a whole, could provide a reasonable basis to conclude that the investigational drug may be effective for the expanded access use and would not expose patients to an unreasonable and significant risk of illness or injury. This evidence would ordinarily consist of clinical data from phase 3 or phase 2 trials, but could be based on more preliminary clinical evidence.

B. Estimates of Reporting Burden

FDA's estimate of the amount of time required to complete an expanded access submission is based on the assumption that either the submission will be made by the drug developer or the submitter will have obtained a right of reference from the drug developer. FDA expects that, if finalized, the proposed rule would result in an increase in the number of submissions for expanded access for individual patients and for intermediate size patient populations.

1. Individual Patient Expanded Access

From 1997 to 2005, FDA received on average approximately 659 submissions for the treatment use of investigational drugs by individual patients per year. This estimate is based on FDA records on the number of individual patient IND submissions (primarily from physicians) and a survey of review divisions on the prevalence of individual patient protocol exception submissions received from commercial drug sponsors. The agency expects an increase in the number of individual patient expanded access submissions as a result of the proposed rule because the proposed rule would increase awareness of the option for individual patients to gain access to investigational drugs and decrease the perceived difficulty of obtaining such access. FDA anticipates that the increase in individual patient expanded access INDs or protocols would be greatest in the years immediately following implementation of a final rule and would at some point level off, or possibly even decline. This leveling off or decline would occur when a significant volume of individual patient expanded access INDs or protocols have accumulated for a variety of drugs, and the individual patient expanded access INDs or protocols for those drugs are then replaced with intermediate size patient population expanded access INDs or protocols that enroll multiple subjects.

The agency estimates that preparation and submission of an individual patient expanded access IND or protocol submission would require a total of approximately 8 hours.

2. Intermediate Size Patient Population Expanded Access

Although intermediate size patient population expanded access INDs or protocols have not previously been described in regulation, investigational drugs have been made available informally for treatment use to such populations. Based on an internal survey of review divisions, FDA

estimates that, for the period 2000 through 2002, it received approximately 55 submissions per year that would be considered expanded access for an intermediate size patient population under the proposed criteria. The agency anticipates that this proposed rule would increase the number of such submissions because there will be greater awareness of this option. In addition, the anticipated increase in volume of submissions for expanded access for individual patients discussed previously is expected to increase the number of submissions for expanded access for intermediate size patient populations because the proposed rule encourages the consolidation of multiple individual patient INDs or protocols for a given expanded access use.

Information provided by FDA review division staff indicates that preparation and submission of an intermediate size patient population IND would require a total of about 120 hours of staff time.

3. Treatment IND or Treatment Protocol

The agency does not expect that the proposed rule will have an impact on the overall number of treatment INDs or treatment protocols because this type of expanded access is already established in FDA's regulations. Therefore, FDA does not expect the provisions of this proposed rule regarding treatment INDs or treatment protocols to impose any increased paperwork burden.

4. Capital Costs

There are capital costs associated with this proposed rulemaking. These costs are discussed in section VII of this document, ''Analysis of Economic Impacts.''

Description of Respondents: Licensed physicians and manufacturers, including small business manufacturers. Table 7 of this document presents the annualized reporting burden for the total number of expanded access submissions, broken down by type of expanded access use. The figures in the table are based on the analysis of economic impacts (section VII of this document) and are derived by averaging the projected number of submissions for the first 3 years after implementation of a final rule based on this proposed rule.

TABLE 7.—ESTIMATED REPORTING BURDEN

21 CFR section	No. of Respondents	No. of Responses per Respondent	Total Responses	Hours per Response	Total Hours
312.310(b) Individual patient expanded access and 310.305(b) submission requirements generally	1,054	1	1,054	8	8,432
312.315(c) Intermediate size patient population expanded access and 310.305(b) submission requirements generally	77	1	77	120	9,240
312.320 Treatment IND or protocol and 310.305(b) submission requirements generally	5	1	5	300	1,500
Total					19,172

In compliance with section 3507(d) of the Paperwork Reduction Act of 1995 (44 U.S.C. 3507(d)), the agency has submitted the information collection provisions of this proposed rule to OMB for review. Interested persons are requested to send comments regarding information collection (see **ADDRESSES**).

IX. Request for Comments

Interested persons may submit to the Division of Dockets Management (see **ADDRESSES**) written or electronic comments regarding this document. Submit a single copy of electronic comments or two paper copies of any mailed comments, except that individuals may submit one paper copy. Comments are to be identified with the docket number found in brackets in the heading of this document. Received comments may be seen in the Division of Dockets Management between 9 a.m. and 4 p.m., Monday through Friday.

X. Federalism

FDA has analyzed this proposed rule in accordance with the principles set forth in Executive Order 13132. FDA has tentatively determined that the rule does not contain policies that have substantial direct effects on the States, on the relationship between the National Government and the States, or on the distribution of power and responsibilities among the various levels of government. Accordingly, the agency has tentatively concluded that the rule does not contain policies that have federalism implications as defined in the order and, consequently, a federalism summary impact statement is not required.

List of Subjects in 21 CFR Part 312

Drugs, Exports, Imports, Investigations, Labeling, Medical research, Reporting and recordkeeping requirements, and Safety.

Therefore, under the Federal Food, Drug, and Cosmetic Act and under authority delegated to the Commissioner of Food and Drugs, it is proposed that 21 CFR part 312 be amended as follows:

PART 312—INVESTIGATIONAL NEW DRUG APPLICATION

1. The authority citation for 21 CFR part 312 is revised to read as follows:

Authority: 21 U.S.C. 321, 331, 351, 352, 353, 355, 360bbb, 371; 42 U.S.C. 262.

§ 312.34 [Removed]

2. Section 312.34 *Treatment use of an investigational new drug* is removed.

§ 312.35 [Removed]

3. Section 312.35 *Submissions for treatment use* is removed.

§ 312.36 [Removed]

4. Section 312.36 *Emergency use of an investigational new drug (IND)* is removed.

5. Section 312.42 is amended by revising paragraph (b)(3) to read as follows:

§ 312.42 Clinical holds and requests for modification.

* * * * *

(b) * * *

(3) *Clinical hold of an expanded access IND or expanded access protocol.* FDA may place an expanded access IND or expanded access protocol on clinical hold under the following conditions:

(i) *Proposed use.* FDA may place a proposed expanded access IND or treatment use protocol on clinical hold if it is determined that:

(A) The pertinent criteria in subpart I of this part for permitting the expanded access use to begin are not satisfied; or

(B) The expanded access IND or expanded access protocol does not comply with the requirements for expanded access submissions in subpart I of this part.

(ii) *Ongoing use*. FDA may place an ongoing expanded access IND or expanded access protocol on clinical hold if it is determined that the pertinent criteria in subpart I of this part for permitting the expanded access are no longer satisfied.

* * * * *

6. Part 312 is amended by adding and reserving subpart H, and by adding subpart I, consisting of §§ 312.300 through 312.320, to read as follows:

Subpart H—[Reserved]

Subpart I—Expanded Access to Investigational Drugs for Treatment Use

Sec.
312.300 General.
312.305 Requirements for all expanded access uses.
312.310 Individual patients, including for emergency use.
312.315 Intermediate size patient populations.
312.320 Treatment IND or treatment protocol.

§ 312.300 General.

(a) *Scope*. This subpart contains the requirements for the use of investigational new drugs when the primary purpose is to diagnose, monitor, or treat a patient's disease or condition. The aim of this subpart is to facilitate the availability of investigational new drugs to seriously ill patients when there is no comparable or satisfactory alternative therapy to diagnose, monitor, or treat the patient's disease or condition.

(b) *Definition*. In this subpart, the term immediately life-threatening disease means a stage of disease in which there is reasonable likelihood that death will occur within a matter of months or in which premature death is likely without early treatment.

§ 312.305 Requirements for all expanded access uses.

The criteria, submission requirements, safeguards, and beginning treatment information set out in this section apply to all expanded access uses described in this subpart. Additional criteria, submission requirements, and safeguards that apply to specific types of expanded access are described in §§ 312.310 through 312.320.

(a) *Criteria*. FDA must determine that:

(1) The patient or patients to be treated have a serious or immediately life-threatening disease or condition, and there is no comparable or satisfactory alternative therapy to diagnose, monitor, or treat the disease or condition;

(2) The potential patient benefit justifies the potential risks of the treatment use and those potential risks are not unreasonable in the context of the disease or condition to be treated; and

(3) Providing the investigational drug for the requested use will not interfere with the initiation, conduct, or completion of clinical investigations that could support marketing approval of the expanded access use or otherwise compromise the potential development of the expanded access use.

(b) *Submission*. (1) An expanded access submission is required for each type of expanded access described in this subpart. The submission may be a new IND or a protocol amendment to an existing IND. Information required for a submission may be supplied by referring to pertinent information contained in an existing IND if the sponsor of the existing IND grants a right of reference to the IND.

(2) The expanded access submission must include:

(i) A cover sheet (Form FDA 1571) meeting the requirements of § 312.23(a);

(ii) The rationale for the intended use of the drug, including a list of available therapeutic options that would ordinarily be tried before resorting to the investigational drug or an explanation of why the use of the investigational drug is preferable to the use of available therapeutic options;

(iii) The criteria for patient selection; or, for an individual patient, a description of the patient's disease or condition, including recent medical history and previous treatments of the disease or condition;

(iv) The method of administration of the drug, dose, and duration of therapy;

(v) A description of the facility where the drug will be manufactured;

(vi) Chemistry, manufacturing, and controls information adequate to ensure the proper identification, quality, purity, and strength of the investigational drug;

(vii) Pharmacology and toxicology information adequate to conclude that the drug is reasonably safe at the dose and duration proposed for expanded access use (ordinarily, information that would be adequate to permit clinical testing of the drug in a population of the size expected to be treated); and

(viii) A description of clinical procedures, laboratory tests, or other monitoring necessary to evaluate the effects of the drug and minimize its risks.

(3) The expanded access submission and its mailing cover must be plainly marked ''EXPANDED ACCESS SUBMISSION.'' If the expanded access submission is for a treatment IND or treatment protocol, the applicable box on Form FDA 1571 must be checked.

(c) *Safeguards*. The responsibilities of sponsors and investigators set forth in subpart D of this part are applicable to expanded access use under this subpart as described in this paragraph.

(1) A licensed physician under whose immediate direction an investigational drug is administered or dispensed for an expanded access use under this subpart is considered an *investigator*, for purposes of this part, and must comply with the responsibilities for investigators set forth in subpart D of this part to the extent they are applicable to the expanded access use.

(2) An individual or entity that submits an expanded access IND or protocol under this subpart is considered a *sponsor*, for purposes of this part, and must comply with the responsibilities for sponsors set forth in subpart D of this part to the extent they are applicable to the expanded access use.

(3) A licensed physician under whose immediate direction an investigational drug is administered or dispensed, and who submits an IND for expanded access use under this subpart is considered a *sponsor-investigator*, for purposes of this part, and must comply with the responsibilities for sponsors and investigators set forth in subpart D of this part to the extent they are applicable to the expanded access use.

(4) *Investigators*. In all cases of expanded access, investigators are responsible for reporting adverse drug experiences to the sponsor, ensuring that the informed consent requirements of part 50 of this chapter are met, ensuring that IRB review of the expanded access use is obtained in a manner consistent with the requirements of part 56 of this chapter, and maintaining accurate case histories and drug disposition records and retaining records in a manner consistent with the requirements of § 312.62. Depending on the type of expanded access, other investigator's responsibilities under subpart D may also apply.

(5) *Sponsors*. In all cases of expanded access, sponsors are responsible for submitting IND safety reports and annual reports (when the IND or protocol continues for 1 year or longer) to FDA as required by §§ 312.32 and

312.33, ensuring that licensed physicians are qualified to administer the investigational drug for the expanded access use, providing licensed physicians with the information needed to minimize the risk and maximize the potential benefits of the investigational drug (e.g., providing the investigator's brochure, if there is one), maintaining an effective IND for the expanded access use, and maintaining adequate drug disposition records and retaining records in a manner consistent with the requirements of § 312.57. Depending on the type of expanded access, other sponsor's responsibilities under subpart D may also apply.

(d) *Beginning treatment*. (1) *INDs*. An expanded access IND goes into effect 30 days after FDA receives the IND or on earlier notification by FDA that the expanded access use may begin.

(2) *Protocols*. With the following exceptions, expanded access use under a protocol submitted under an existing IND may begin as described in § 312.30(a).

(i) Expanded access use under the emergency procedures described in § 312.310(d) may begin when the use is authorized by the FDA reviewing official.

(ii) Expanded access use under § 312.320 may begin 30 days after FDA receives the protocol or upon earlier notification by FDA that use may begin.

(3) *Clinical holds*. FDA may place any expanded access IND or protocol on clinical hold as described in § 312.42.

§ 312.310 Individual patients, including for emergency use.

Under this section, FDA may permit an investigational drug to be used for the treatment of an individual patient by a licensed physician.

(a) *Criteria*. The criteria in § 312.305(a) must be met; and the following determinations must be made:

(1) The physician must determine that the probable risk to the person from the investigational drug is not greater than the probable risk from the disease or condition; and

(2) FDA must determine that the patient cannot obtain the drug under another type of IND or protocol.

(b) *Submission*. The expanded access submission must include information adequate to demonstrate that the criteria in § 312.305(a) and paragraph (a) of this section have been met. The expanded access submission must meet the requirements of § 312.305(b).

(1) If the drug is the subject of an existing IND, the expanded access submission may be made by the sponsor or by a licensed physician.

(2) A sponsor may satisfy the submission requirements by amending its existing IND to include a protocol for individual patient expanded access.

(3) A licensed physician may satisfy the submission requirements by obtaining from the sponsor permission for FDA to refer to any information in the IND that would be needed to support the expanded access request (right of reference) and by providing any other required information not contained in the IND (usually only the information specific to the individual patient).

(c) *Safeguards*. (1) Treatment is generally limited to a single course of therapy for a specified duration unless FDA expressly authorizes multiple courses or chronic therapy.

(2) At the conclusion of treatment, the licensed physician or sponsor must provide a written summary of the results of the expanded access use, including unexpected adverse effects.

(3) FDA may require sponsors to monitor an individual patient expanded access use if the use is for an extended duration.

(4) When a significant number of similar individual patient expanded access requests have been submitted, FDA may ask the sponsor to submit an IND or protocol for the use under § 312.315 or § 312.320.

(d) *Emergency procedures*. If there is an emergency that requires the patient to be treated before a written submission can be made, FDA may authorize the expanded access use to begin without a written submission. The FDA reviewing official may authorize the emergency use by telephone.

(1) Emergency expanded access use may be requested by telephone, facsimile, or other means of electronic communications. For investigational biological drug products regulated by the Center for Biologics Evaluation and Research, the request should be directed to the Office of Communication, Training, and Manufacturers Assistance, Center for Biologics Evaluation and Research, 301–827–2000, e-mail: *octma@cber.fda.gov*. For all other investigational drugs, the request for authorization should be directed to the Division of Drug Information, Center for Drug Evaluation and Research, 301–827–4570, e-mail: *druginfo@cder.fda.gov*. After normal working hours, the request should be directed to the FDA Office of Emergency Operations, 301–443–1240, e-mail: *emergency.operations@fda.hhs.gov*.

(2) The licensed physician or sponsor must explain how the expanded access use will meet the requirements of §§ 312.305 and 312.310 and must agree to submit an expanded access submission within 5 working days of FDA's authorization of the use.

§ 312.315 Intermediate-size patient populations.

Under this section, FDA may permit an investigational drug to be used for the treatment of a patient population smaller than that typical of a treatment IND or treatment protocol. FDA may ask a sponsor to consolidate expanded access under this section when the agency has received a significant number of requests for individual patient expanded access to an investigational drug for the same use.

(a) *Need for expanded access*. Expanded access under this section may be needed in the following situations:

(1) *Drug not being developed*. The drug is not being developed, for example, because the disease or condition is so rare that the sponsor is unable to recruit patients for a clinical trial.

(2) *Drug being developed*. The drug is being studied in a clinical trial, but patients requesting the drug for expanded access use are unable to participate in the trial. For example, patients may not be able to participate in the trial because they have a different disease or stage of disease than the one being studied or otherwise do not meet the enrollment criteria, because enrollment in the trial is closed, or because the trial site is not geographically accessible.

(3) *Approved or related drug*. (i) The drug is an approved drug product that is no longer marketed for safety reasons or is unavailable through marketing due to failure to meet the conditions of the approved application, or

(ii) The drug contains the same active moiety as an approved drug product that is unavailable through marketing due to failure to meet the conditions of the approved application or a drug shortage.

(b) *Criteria*. The criteria in § 312.305(a) must be met; and FDA must determine that:

(1) There is enough evidence that the drug is safe at the dose and duration proposed for expanded access use to justify a clinical trial of the drug in the approximate number of patients expected to receive the drug under expanded access; and

(2) There is at least preliminary clinical evidence of effectiveness of the drug, or of a plausible pharmacologic effect of the drug to make expanded access use a reasonable therapeutic option in the anticipated patient population.

(c) *Submission*. The expanded access submission must include information

adequate to satisfy FDA that the criteria in § 312.305(a) and paragraph (b) of this section have been met. The expanded access submission must meet the requirements of § 312.305(b). In addition:

(1) The expanded access submission must state whether the drug is being developed or is not being developed and describe the patient population to be treated.

(2) If the drug is not being actively developed, the sponsor must explain why the drug cannot currently be developed for the expanded access use and under what circumstances the drug could be developed.

(3) If the drug is being studied in a clinical trial, the sponsor must explain why the patients to be treated cannot be enrolled in the clinical trial and under what circumstances the sponsor would conduct a clinical trial in these patients.

(d) *Safeguards*. (1) Upon review of the IND annual report, FDA will determine whether it is appropriate for the expanded access to continue under this section.

(i) If the drug is not being actively developed or if the expanded access use is not being developed (but another use is being developed), FDA will consider whether it is possible to conduct a clinical study of the expanded access use.

(ii) If the drug is being actively developed, FDA will consider whether providing the investigational drug for expanded access use is interfering with the clinical development of the drug.

(iii) As the number of patients enrolled increases, FDA may ask the sponsor to submit an IND or protocol for the use under § 312.320.

(2) The sponsor is responsible for monitoring the expanded access protocol to ensure that licensed physicians comply with the protocol and the regulations applicable to investigators.

§ 312.320 Treatment IND or treatment protocol.

Under this section, FDA may permit an investigational drug to be used for widespread treatment use.

(a) *Criteria*. The criteria in § 312.305(a) must be met, and FDA must determine that:

(1) *Trial status*. (i) The drug is being investigated in a controlled clinical trial under an IND designed to support a marketing application for the expanded access use, or

(ii) All clinical trials of the drug have been completed; and

(2) *Marketing status*. The sponsor is actively pursuing marketing approval of the drug for the expanded access use with due diligence; and

(3) *Evidence*. (i) When the expanded access use is for a serious disease or condition, there is sufficient clinical evidence of safety and effectiveness to support the expanded access use. Such evidence would ordinarily consist of data from phase 3 trials, but could consist of compelling data from completed phase 2 trials; or

(ii) When the expanded access use is for an immediately life-threatening disease or condition, the available scientific evidence, taken as a whole, provides a reasonable basis to conclude that the investigational drug may be effective for the expanded access use and would not expose patients to an unreasonable and significant risk of illness or injury. This evidence would ordinarily consist of clinical data from phase 3 or phase 2 trials, but could be based on more preliminary clinical evidence.

(b) *Submission*. The expanded access submission must include information adequate to satisfy FDA that the criteria in § 312.305(a) and paragraph (a) of this section have been met. The expanded access submission must meet the requirements of § 312.305(b).

(c) *Safeguard*. The sponsor is responsible for monitoring the treatment protocol to ensure that licensed physicians comply with the protocol and the regulations applicable to investigators.

Dated: December 6, 2006.

Jeffrey Shuren,

Assistant Commissioner for Policy.

[FR Doc. 06–9684 Filed 12–11–06; 10:01 am]

BILLING CODE 4160–01–S

DEPARTMENT OF HEALTH AND HUMAN SERVICES

Food and Drug Administration

21 CFR Part 312

[Docket No. 2006N–0061]

RIN 0910–AF13

Charging for Investigational Drugs

AGENCY: Food and Drug Administration, HHS.

ACTION: Proposed rule.

SUMMARY: The Food and Drug Administration (FDA) is proposing to amend its investigational new drug application (IND) regulation concerning charging patients for investigational new drugs. FDA is proposing to revise the current charging regulation to clarify the circumstances in which charging for an investigational drug in a clinical trial is appropriate, to set forth criteria for charging for an investigational drug for the different types of expanded access for treatment use described in the agency's proposed rule on expanded access for treatment use of investigational drugs published elsewhere in this issue of the **Federal Register**, and to clarify what costs can be recovered for an investigational drug. The proposed rule is intended to permit charging for a broader range of investigational and expanded access uses than is explicitly permitted in current regulations.

DATES: Submit written or electronic comments by March 14, 2007. Submit written comments on the information collection requirements by January 16, 2007.

ADDRESSES: You may submit comments, identified by Docket No. 2006N–0061 and/or RIN number 0910–AF13, by any of the following methods:

Electronic Submissions

Submit electronic comments in the following ways:

- Federal eRulemaking Portal: *http://www.regulations.gov*. Follow the instructions for submitting comments.
- Agency Web site: *http://www.fda.gov/dockets/ecomments*. Follow the instructions for submitting comments on the agency Web site.

Written Submissions

Submit written submissions in the following ways:

- FAX: 301–827–6870.
- Mail/Hand delivery/Courier [For paper, disk, or CD–ROM submissions]: Division of Dockets Management (HFA–305), Food and Drug Administration, 5630 Fishers Lane, rm. 1061, Rockville, MD 20852.

To ensure more timely processing of comments, FDA is no longer accepting comments submitted to the agency by e-mail. FDA encourages you to continue to submit electronic comments by using the Federal eRulemaking Portal or the agency Web site, as described in the *Electronic Submissions* portion of this paragraph.

Instructions: All submissions received must include the agency name and Docket No(s). and Regulatory Information Number (RIN) (if a RIN number has been assigned) for this rulemaking. All comments received may be posted without change to *http://www.fda.gov/ohrms/dockets/default.htm*, including any personal information provided. For additional information on submitting comments, see the ''Comments'' heading of the **SUPPLEMENTARY INFORMATION** section of this document.

Docket: For access to the docket to read background documents or

comments received, go to *http://www.fda.gov/ohrms/dockets/default.htm* and insert the docket number(s), found in brackets in the heading of this document, into the ''Search'' box and follow the prompts and/or go to the Division of Dockets Management, 5630 Fishers Lane, rm. 1061, Rockville, MD 20852.

The Office of Management and Budget (OMB) is still experiencing significant delays in the regular mail, including first class and express mail, and messenger deliveries are not being accepted. To ensure that comments on the information collection are received, OMB recommends that written comments be faxed to the Office of Information and Regulatory Affairs, OMB, Attn: Desk Officer for FDA, FAX: 202–395–6974.

FOR FURTHER INFORMATION CONTACT:

For the Center for Drug Evaluation and Research: Colleen L. Locicero, Center for Drug Evaluation and Research (HFD–101), Food and Drug Administration, 10903 New Hampshire Ave., Bldg. 22, rm. 4200, Silver Spring, MD 20993–0002, 301–796–2270.

For the Center for Biologics Evaluation and Research: Steve Ripley, Center for Biologics Evaluation and Research (HFM–17), Food and Drug Administration, 1401 Rockville Pike, Rockville, MD 20852, 301–827–6210.

SUPPLEMENTARY INFORMATION:

Table of Contents

I. The Current Regulation
II. Why the Current Charging Rule Needs to be Revised
A. Overview
B. Criteria for Charging in a Clinical Trial
C. Charging for Expanded Access for Treatment Use
D. Recoverable Costs
III. Description of the Proposed Rule
A. General Requirements
B. Clinical Trials
C. Expanded Access for Treatment Use
D. Recoverable Costs
IV. Legal Authority
V. Environmental Impact
VI. Analysis of Economic Impacts
A. Objectives of the Proposed Action
B. The Need for the Proposed Rule
C. Why Allow Charging?
D. Baseline for the Analysis
E. Nature of the Impact
F. Benefits of the Proposed Rule
G. Costs of the Proposed Rule
H. Minimizing the Impact on Small Entities
VII. Paperwork Reduction Act of 1995
VIII. Federalism
IX. Request for Comments

I. The Current Regulation

FDA's current regulation on charging for an investigational drug is § 312.7(d) (21 CFR 312.7(d)). Section 312.7(d) was first proposed in the **Federal Register** of June 9, 1983 (48 FR 26720), and reproposed March 19, 1987 (52 FR 8850) (the 1987 proposal). The final rule published in the **Federal Register** of May 22, 1987 (52 FR 19466) (the 1987 final rule). Under § 312.7(d), FDA may authorize charging for an investigational drug used in a clinical trial under an IND and for an investigational drug used in a treatment protocol or treatment IND.

Section 312.7(d)(1) provides that a sponsor who wishes to charge for an investigational drug in a clinical trial must provide a full written explanation of why charging is necessary for the sponsor to undertake or continue the clinical trial, e.g., why distribution of the drug to test subjects should not be considered part of the normal cost of doing business.

Section 312.7(d)(2) sets out the following four conditions that must be met to charge for an investigational drug used under a treatment protocol or treatment IND:

- There must be adequate enrollment in the ongoing clinical investigations under the authorized IND;
- Charging must not constitute commercial marketing of a new drug for which a marketing application has not been approved;
- The drug must not be commercially promoted or advertised; and
- The sponsor of the drug must be actively pursuing marketing approval with due diligence.

Section 312.7(d)(2) also provides that to charge for an investigational drug used in a treatment IND or treatment protocol, the sponsor must submit an information amendment under § 312.31 (21 CFR 312.31) of the IND regulations. Authorization for charging goes into effect automatically 30 days after FDA receives the information amendment, unless the agency notifies the sponsor to the contrary.

Section 312.7(d)(3) provides that a sponsor may not commercialize an investigational drug by charging a price larger than that necessary to recover costs of manufacture, research, development, and handling of the investigational drug.

Section 312.7(d)(4) provides that FDA will withdraw authorization to charge if it determines that charging is interfering with the development of a drug for marketing approval or that the criteria for the authorization are no longer being met.

II. Why the Current Charging Rule Needs to be Revised

A. Overview

There are three principal reasons for revising the current charging regulation.

First, the provisions of the current charging regulation concerning charging for investigational drugs in a clinical trial need to be revised to take into account circumstances that were not anticipated when the original rule was adopted in 1987. FDA expected that requests to charge in a clinical trial would be limited to requests to charge for the sponsor's drug being tested in the trial. In fact, the agency has received few such requests. Far more common are requests to charge for approved drugs in trials when the drugs must be obtained from another company. The approved drug may be used in a trial of the sponsor's drug as an active control or in combination with the sponsor's drug. Even more common are requests to charge for approved drugs used in studies by a third party (not a manufacturer) that are intended to study new uses of the approved drug or to compare two drugs. FDA believes that requests to charge for investigational drugs in these situations may be appropriate, but that the criteria for evaluation of such requests are different from those that apply when the request to charge is for the sponsor's drug being tested in a clinical trial. Accordingly, the agency believes the current charging regulation needs to be revised to provide criteria for charging for approved drugs used in clinical trials.

Second, the provisions of the current charging regulation related to treatment use provide for charging patients for investigational drugs only when those drugs are provided under a treatment IND or treatment protocol. Elsewhere in this issue of the **Federal Register**, FDA is proposing to add to part 312 (21 CFR part 312) new subpart I concerning ''Expanded Access to Investigational Drugs for Treatment Use.'' That proposed rule would retain the treatment IND and treatment protocol provisions in the current regulation with minor modifications, and provide for two additional categories of expanded access for treatment use—expanded access for individual patients and expanded access for intermediate size patient populations. The current charging rule needs to be revised to provide authority to charge for investigational drugs for these two new categories of expanded access for treatment use.

Third, FDA believes the current charging regulation needs to be revised to specify the types of costs that can be

recovered. The language of the current charging rule is not very specific and does not provide sufficient guidance to sponsors on the costs that can be recovered. Moreover, because of the different justifications for charging in a clinical trial and charging for treatment use, the agency believes that the costs appropriate for recovery also differ.

The reasons why FDA believes the current charging regulation needs to be revised are described more fully in sections II.B, C, and D of this document.

B. Criteria for Charging in a Clinical Trial

Generally, the costs of conducting a clinical trial are costs that the sponsor should bear. Conducting a clinical trial is part of the drug development process, and drug development is an ordinary business expense for a commercial sponsor. If the investigational drug proves successful in clinical trials, the sponsor will recoup its development costs by marketing the drug for its approved indication. Because research subjects who participate in a clinical trial are permitting themselves to be exposed to a drug that has not been proven to be effective and that may also pose safety risks, subjects generally should not be expected to pay for the drug. In fact, in return for their willingness to be exposed to an unapproved drug, subjects in clinical trials are usually compensated, rather than charged for the drug.

The current regulation on charging requires a sponsor who wishes to charge for an investigational drug in a clinical trial to provide a full written explanation of why charging is necessary for the sponsor to undertake or continue the clinical trial (e.g., why distributing the study drug to test subjects should not be considered part of the normal cost of doing business). However, the regulation does not specify the criteria that FDA would use to evaluate the sponsor's explanation for why charging is necessary to undertake the trial or why the cost of a drug should not be considered part of the normal cost of doing business.

The preambles to the reproposed and final rules, however, were more specific about the circumstances in which FDA believed charging for an investigational drug in a clinical trial might be appropriate. In the preamble to the 1987 reproposal, the agency stated that ''extremely high costs could warrant the sale of drugs used in clinical trials'' (52 FR 8850 at 8854). The agency indicated that allowing charging for very expensive drugs could be particularly advantageous by ''permitting small and fledgling companies to test products that are extremely expensive to produce * * *'' (52 FR 8850 at 8854). In the preamble to the 1987 final rule, the agency also stated that ''cost recovery is justified in clinical trials only when necessary to further the study and development of promising drugs that might otherwise be lost to the medical armamentarium'' (52 FR 19466 at 19474).

Thus, the philosophy behind the current charging regulation was that authorizing charging in a clinical trial required an exceptional circumstance, including evidence that the drug might provide an advantage over available therapy and that the study for which charging is requested is necessary to further the development of the drug and could not be conducted without charging. FDA is now proposing to describe in regulation specific criteria for charging that are consistent with the policies articulated in the preambles to the reproposed and final rules. These criteria are described in greater detail in section III.B of this document.

As discussed in section II.A of this document, FDA now believes that charging for an investigational drug in a clinical trial may also be appropriate when the clinical trial includes approved drugs that must be obtained from another company. The approved drug may be used in a trial of the sponsor's drug as an active control or in combination with the sponsor's drug. In another situation, an approved drug may need to be obtained from the marketer of that drug for use in studies by a third party (not the manufacturer) that are intended to study a new use for the approved drug or to compare two drugs. Thus, FDA is now proposing to revise the charging rule to include criteria that apply to these two situations when an approved drug is used in a clinical trial. These criteria are described in section III.B of this document.

C. Charging for Expanded Access for Treatment Use

Charging for the cost of an investigational drug for expanded access for treatment use is a very different situation from charging for a drug in a clinical trial. Treatment use is not a necessary part of the drug development process and does not benefit the pharmaceutical companies by leading to systematic accumulation of data intended to support marketing authorization. Rather, treatment use is primarily intended to benefit very sick patients by permitting them to receive investigational drugs to treat their diseases and conditions, with collection of information about the drug being incident to the intent to treat. FDA wants to encourage sponsors to make investigational drugs available to seriously ill patients who lack satisfactory alternative treatment and might benefit from these drugs. However, making investigational drugs available for expanded access for treatment use is potentially costly, especially when many patients are involved. Therefore, the agency believes that sponsors should be permitted to charge patients for investigational drugs for expanded access for treatment use, provided that charging will not impede the progress of drug development.

The current charging regulation in § 312.7(d)(2) contains FDA's criteria for allowing a sponsor to charge for investigational drugs for treatment use under a treatment IND or treatment protocol in accordance with §§ 312.34 and 312.35. Elsewhere in this issue of the **Federal Register**, FDA is proposing to add to part 312 new subpart I (Expanded Access to Investigational Drugs for Treatment Use), which would retain the treatment IND and protocol provisions in the current regulation with minor modifications, and provide for two additional categories of expanded access for treatment use that have not previously been described in regulation, (1) expanded access for individual patients and (2) expanded access for intermediate size patient populations. FDA is proposing to revise the current charging regulation to incorporate criteria to permit charging for these newly described categories of expanded access for treatment use. The criteria that must be met to charge for these uses are described in more detail in section III.C of this document.

D. Recoverable Costs

FDA is also proposing to revise the regulation on charging to clearly describe the costs a sponsor can include in its cost recovery calculation for an investigational drug. Under the current charging regulation, a sponsor may not charge a price ''larger than that necessary to recover costs of manufacture, research, development, and handling of the investigational drug'' (§ 312.7(d)(3)). In FDA's experience, this provision has been prone to varied interpretations, sometimes resulting in unrealistic cost calculations. For example, some sponsors have interpreted the provision as allowing cost recovery for all possible costs associated with the research, development, manufacture, and handling of the drug from the inception of drug development. Some sponsors have also interpreted § 312.7(d)(3) as permitting cost recovery for the entire

cost of facilities designed to produce the drug in quantities that would be adequate for the ultimate marketing of the drug. These interpretations typically result in a cost that cannot reasonably be recovered from the number of patients who will be receiving the investigational drug.

FDA believes the current cost recovery provision was intended to permit a sponsor to recover the costs associated with providing an expensive drug product to study subjects in a clinical trial or making a drug product available for treatment use. FDA does not believe the intent was to allow a sponsor to recover the costs of research and development of a drug before it is marketed. The proposed rule is intended to clearly describe what costs may be recovered by a sponsor by providing criteria that are less susceptible to varied interpretations. These criteria are described in section III.D of this document.

III. Description of the Proposed Rule

The proposed rule would remove paragraph (d) of current § 312.7 that discusses charging for and commercialization of investigational drugs. The proposed rule would create new § 312.8 describing general requirements for charging for investigational drugs, specific requirements pertaining to charging for investigational drugs in a clinical trial, charging for investigational drugs for treatment use under proposed subpart I (described elsewhere in this issue of the **Federal Register**), and requirements for determining what costs can be recovered when charging for an investigational drug.

A. General Requirements

Proposed § 312.8(a) describes the following general requirements and conditions for charging for investigational new drugs. A sponsor who wishes to charge for an investigational drug must do the following:

- Comply with the applicable requirements for the type of use for which charging is requested (either in a clinical trial or for treatment use) (proposed § 312.8(a)(1)),
- Provide justification that the amount to be charged reflects only those costs that are permitted to be recovered (proposed § 312.8(a)(2)), and
- Obtain prior written authorization from FDA (proposed § 312.8(a)(3)).

The requirement in the proposed rule to obtain prior written authorization from FDA to charge for any investigational drug would be a change from the provisions of the current charging regulation. At the present time, sponsors must obtain prior written approval from FDA to charge for an investigational drug in a clinical trial (§ 312.7(d)(1)). On the other hand, authorization to charge for an investigational drug in a treatment protocol or treatment IND goes into effect automatically 30 days after receipt by FDA of an information amendment concerning charging, unless FDA notifies the sponsor to the contrary (§ 312.7(d)(2)). The proposal to require sponsors to obtain prior written authorization to charge for all types of expanded access is consistent with the agency's current practice of reviewing requests to charge for investigational drugs in treatment protocols or treatment INDs. The agency wants to review requests to charge for any type of expanded access to ensure that the criteria for charging have been met and that the amount to be charged does not exceed the costs permissible under the proposed rule.

Proposed § 312.8(a)(4) provides that FDA will withdraw authorization to charge if it determines that charging is interfering with the development of a drug for marketing approval or that the criteria for the authorization are no longer being met.

B. Clinical Trials

Proposed § 312.8(b) describes specific requirements pertaining to charging for an investigational drug in a clinical trial. This provision addresses three situations in which FDA may authorize charging for an investigational drug in a clinical trial, including investigational use of an approved drug.

Proposed § 312.8(b)(1) describes criteria for charging for the sponsor's own drug in a clinical trial. The cost of an investigational drug used in a clinical trial is an anticipated cost of drug development and should ordinarily be borne by the sponsor. Therefore, FDA believes that charging should be permitted only when three circumstances are present. First, charging should be allowed only to facilitate development of a promising new drug or indication that might not otherwise be developed, or to obtain important safety information that might not otherwise be obtained. Accordingly, the proposed rule provides that a sponsor wishing to charge for its investigational drug in a clinical trial must provide some evidence of potential clinical benefit that, if demonstrated in clinical investigations, would provide a significant advantage over available products in the diagnosis, treatment, mitigation, or prevention of a disease or condition (proposed § 312.8(b)(1)(i)).

Second, charging should be permitted only for a trial that is necessary for the development of the drug. Therefore, the sponsor must demonstrate that the data to be obtained from the clinical trial would be essential to establishing that the drug is effective or safe for the purpose of obtaining initial marketing approval of the drug, or that it would support a significant change in the labeling of the sponsor's approved drug (proposed § 312.8(b)(1)(ii)). For example, the trial could be designed to provide data that would support approval of a new indication or generate important comparative safety information. The type of products that are likely to meet these two criteria are also likely to be eligible for fast track development programs and priority review (see FDA's guidance for industry on ''Fast Track Drug Development Programs—Designation, Development, and Application Review,'' including the priority review policies for the Centers for Drug Evaluation and Research and Biologics Evaluation and Research in appendix 3 (available on the Internet at *http://www.fda.gov/cder/guidance/index.htm*)).

Third, charging must be necessary to the conduct of the clinical trial. Under proposed § 312.8(b)(1)(iii), a sponsor would be required to demonstrate that clinical development of the drug could not be continued without charging because the cost of the drug is extraordinary. The cost of the drug may be extraordinary because of manufacturing complexity, scarcity of a natural resource, the large quantity of drug needed (e.g., due to the size or duration of the trial), or some combination of these or other extraordinary circumstances.

Proposed § 312.8(b)(2) describes criteria for charging for an approved drug that a sponsor must obtain from another entity for use as an active control or in combination with another drug in a clinical trial designed to evaluate the effectiveness or safety of the sponsor's investigational drug. In these situations, the study subjects typically must receive some therapy for their disease or condition because using a placebo control would be unethical. In addition, the subjects often would be treated with the approved drug in the course of medical practice if they were not participating in the clinical trial. Therefore, FDA believes the threshold for charging in this situation should be lower than the threshold for charging by a sponsor for the sponsor's own investigational drug. To charge for an approved drug in this situation, a

sponsor must demonstrate that the trial is of adequate design to evaluate the safety or effectiveness of the sponsor's drug and that the drug is not being provided free of charge by its manufacturer (proposed § 312.8(b)(2)(i) and (b)(2)(ii)).

Proposed § 312.8(b)(3) describes criteria for charging for an approved drug that must be obtained from another entity in a clinical trial designed to evaluate the approved drug (e.g., for another indication). This provision is primarily intended to enable sponsors who are not commercial entities in the business of drug development to study new uses of approved drugs that might not be of commercial interest to the drug's manufacturer or to conduct studies that provide additional information about a drug that might not otherwise be obtained. Typically, these sponsors are sponsor-investigators conducting relatively small trials at a single site. Such sponsors lack the resources of commercial sponsors and are not conducting the research for commercial purposes, so they will not be able to recover the cost of obtaining the approved drug by marketing the drug, for example, for a new indication. The agency believes these kinds of trials should be encouraged because they may yield important data about less commercially viable uses of a drug. Therefore, FDA believes the threshold for charging by a sponsor in this situation should be lower than the threshold for charging for the sponsor's own investigational drug. To charge for an approved drug in this situation, a sponsor must demonstrate that the clinical trial of the approved drug is of adequate design to evaluate the safety or effectiveness of a new indication, or provide important safety information related to an approved indication, and that the drug is not being provided free of charge by its manufacturer (proposed § 312.8(b)(3)(i) and (b)(3)(ii)).

Proposed § 312.8(b)(4) provides that the authorization to charge for a drug in a clinical trial would ordinarily continue for the duration of the clinical trial because it is unlikely that the need for charging would change during the course of the trial. However, proposed § 312.8(b)(4) gives FDA the discretion to specify a duration shorter than the length of the trial. FDA may specify a shorter duration if, for example, there is a particular concern that the authorization to charge has the potential to delay the development of a drug for marketing approval.

C. Expanded Access for Treatment Use

Proposed § 312.8(c) sets forth the criteria for charging for the three types of expanded access to investigational drugs for treatment use described in proposed subpart I of part 312 described elsewhere in this issue of the **Federal Register**. Proposed subpart I describes two types of treatment use (expanded access for individual patients and expanded access for intermediate size patient populations) not previously described in FDA's regulations and, therefore, not specifically contemplated by the existing charging regulation. The agency's principal concern with charging patients in expanded access settings for investigational drugs is that charging not interfere with the development of drugs for commercial marketing. Accordingly, proposed § 312.8(c)(1) would require a sponsor wishing to charge for an investigational drug for any of the three types of expanded access under proposed subpart I to provide reasonable assurance that charging will not interfere with developing the drug for marketing approval.

For the types of expanded access to investigational drugs described in proposed subpart I, FDA believes it is less likely that the limited numbers of patients who might obtain individual patient expanded access to an investigational drug (§ 312.305 of proposed subpart I) or intermediate size patient population expanded access (§ 312.310 of proposed subpart I) would impede development of a drug or indication. The potential to interfere with drug development is greatest for treatment use under a treatment IND or protocol (§ 312.320 of proposed subpart I). Treatment INDs or protocols can attract large numbers of patients and thus have the potential to significantly affect enrollment in the clinical trials needed to establish safety and effectiveness. Accordingly, proposed § 312.8(c)(2) sets forth specific information that would be required to reasonably assure FDA that charging for an investigational drug under a treatment IND or protocol will not interfere with drug development. Sponsors would be required to provide evidence of sufficient enrollment in any ongoing clinical trials needed for marketing approval to reasonably assure FDA that the trials will be completed as planned (proposed § 312.8(c)(2)(i)). Sponsors would also be required to provide evidence of adequate progress in the development of the drug for marketing approval (proposed § 312.8(c)(2)(ii)). Such evidence could include successful meetings with FDA before submission of a new drug application (NDA), submission of an NDA, or completion of other significant drug development milestones. Sponsors would also be required to submit information under their general investigational plans (§ 312.23(a)(3)(iv)) specifying the drug development milestones they plan to meet in the coming year (proposed § 312.8(c)(2)(iii)).

Proposed § 312.8(c)(3) specifies that the authorization to charge be limited to the number of patients authorized to receive the drug for treatment use, if there is a limitation. For example, the authorization to charge for an investigational drug under an individual patient expanded access submission would be limited to a single patient. Similarly, the authorization to charge under an intermediate size patient population expanded access submission would be limited to the number of patients permitted to receive the drug under that particular intermediate patient population expanded access IND or protocol.

Proposed § 312.8(c)(4) provides that FDA will ordinarily authorize charging for expanded access for treatment use under proposed subpart I to continue for 1 year from the time of FDA authorization. It also provides FDA the discretion to specify a shorter authorization. FDA proposes to limit the authorization to charge to a period of 1 year or less to permit the agency to periodically assess whether the criteria for charging continue to be met. FDA anticipates that it would exercise its discretion to specify a shorter duration when there is a particular concern that charging could interfere with drug development. Proposed § 312.8(c)(4) provides that a sponsor may request that FDA reauthorize charging for additional periods.

D. Recoverable Costs

Proposed § 312.8(d) describes the kinds of costs that are recoverable when charging for an investigational drug in a clinical trial and for expanded access for treatment use under proposed subpart I. The purpose of permitting charging for an investigational drug in a clinical trial is to permit a sponsor to recover the costs of a drug when the drug is extraordinarily expensive. Thus, proposed § 312.8(d)(1) would limit cost recovery to the direct costs of making the investigational drug available in these situations. Indirect costs could not be recovered.

Proposed § 312.8(d)(1)(i) describes direct costs as costs incurred by a sponsor that can be specifically and exclusively attributed to providing the drug for the investigational use for which FDA has authorized cost recovery. Direct costs include costs per unit to manufacture the drug (e.g., raw

materials, labor, and nonreusable supplies and equipment used to manufacture the quantity of drug needed for the use for which charging is authorized) or costs to acquire the drug from another manufacturing source, and direct costs to ship and handle (e.g., store) the drug.

Indirect costs are costs that are not attributable solely to making the drug available for the investigational use for which charging is requested. For example, expenditures for physical plant and equipment that are incurred primarily for the purpose of producing large quantities of the drug for commercial sale after approval, or for making the drug available for a variety of investigational uses, are not appropriate for cost recovery for these investigational uses because these are costs that would be incurred even if the clinical trial or expanded access use for which charging is authorized did not occur. Proposed § 312.8(d)(1)(ii) states that indirect costs include costs incurred primarily to produce the drug for commercial sale (e.g., costs for facilities and equipment used to manufacture the supply of investigational drug, but that are primarily intended to produce large quantities of the drug for eventual commercial sale) and research and development, administrative, labor, or other costs that would be incurred even if the clinical trial or treatment use for which charging is authorized did not occur.

Sponsors who provide investigational drugs for expanded access for treatment use for intermediate size patient populations and for treatment INDs and protocols incur costs in addition to the anticipated and ordinary costs of drug development. The purpose of permitting cost recovery for expanded access use is to encourage sponsors to make investigational drugs available for treatment use. Thus, proposed § 312.8(d)(2) would permit a sponsor to recover the costs of administering treatment use programs for intermediate size patient populations and for treatment INDs and protocols, as well as the direct costs of the drug. The proposed rule would not authorize sponsors to recover administrative costs associated with expanded access for individual patients because these costs would be so minor.

Proposed § 312.8(d)(2) provides that, in addition to the direct costs of the drug described in proposed § 312.8(d)(1), a sponsor may recover the costs of monitoring the expanded access use, complying with IND reporting requirements, and other administrative costs directly associated with making a drug available for treatment use under §§ 312.315 and 312.320 of proposed subpart I.

Sponsors who provide investigational drugs for expanded access for treatment use for intermediate size patient populations and for treatment INDs and protocols incur costs in addition to the anticipated and ordinary costs of drug development. The purpose of permitting cost recovery for expanded access use is to encourage sponsors to make investigational drugs available for treatment use. Thus, proposed § 312.8(d)(2) would permit a sponsor to recover the costs of administering treatment use programs for intermediate size patient populations and for treatment INDs and protocols, as well as the direct costs of the drug. The proposed rule would not authorize sponsors to recover administrative costs associated with expanded access for individual patients because these costs would be so minor.

Proposed § 312.8(d)(3) provides that, to support its calculation for cost recovery, a sponsor must provide supporting documentation to show that the cost calculation is consistent with the relevant requirements in proposed § 312.8(d). If such documentation relies on financial information or accounting methods beyond the expertise of FDA reviewers, FDA may request that a sponsor provide independent certification that its cost recovery calculation is consistent with the requirements of this section.

IV. Legal Authority

FDA has the authority under the Federal Food, Drug, and Cosmetic Act (the act) to permit charging for an investigational new drug under the conditions set forth in this proposed rule. This proposed rule would clarify and slightly expand the charging scheme that is already in place. It is based on the agency's[1] authority to issue regulations pertaining to the investigational use of drugs, section 505(i) of the act (21 U.S.C. 355(i)), its authority pertaining to expanded access to unapproved drugs for treatment use, section 561 of the act (21 U.S.C. 360bbb), and its general grant of rulemaking authority for the efficient enforcement of the act, section 701(a) of the act (21 U.S.C. 371(a)).

Section 505(i) of the act directs the agency to issue regulations exempting from the operation of the new drug approval requirements drugs intended solely for investigational use by experts qualified by scientific training and expertise to investigate the safety and effectiveness of drugs. It is this authority that underlies FDA's IND regulations in part 312. The proposed rule would add to and clarify the existing IND regulations by revising the current charging regulation to explain the circumstances under which charging for an investigational drug is appropriate in a clinical trial and to clarify what costs can be recovered.

Section 561 of the act, added by the Food and Drug Administration Modernization Act of 1997 (Public Law 105–115), provides additional authority for this proposed rule. One of that section's preconditions to providing an investigational drug for treatment use is that the sponsor submit a protocol consistent with regulations issued under section 505(i) of the act. (See section 561(b)(1)(4) and (c) of the act.) This rulemaking, proposed under section 505(i) of the act, sets out the circumstances under which charging for an investigational drug is appropriate for treatment use in an expanded access program as well as in a clinical trial and clarifies what costs can be recovered.

Section 701(a) of the act gives FDA the authority to issue regulations for the efficient enforcement of the act. Further discussion of FDA's legal authority regarding charging can be found at 52 FR 19466 at 19472 (May 22, 1987).

V. Environmental Impact

The agency has determined, under 21 CFR 25.30(h), that this action is of a type that does not individually or cumulatively have a significant effect on the human environment. Therefore, neither an environmental assessment nor an environmental impact statement is required.

VI. Analysis of Economic Impacts

FDA has examined the impacts of the proposed rule under Executive Order 12866 and the Regulatory Flexibility Act (5 U.S.C. 601–612), and the Unfunded Mandates Reform Act of 1995 (Public Law 104–4). Executive Order 12866 directs agencies to assess all costs and benefits of available regulatory alternatives and, when regulation is necessary, to select regulatory approaches that maximize net benefits (including potential economic, environmental, public health and safety, and other advantages; distributive impacts; and equity). The agency believes that this proposed rule is not an economically significant regulatory action as defined by the Executive order.

[1] In light of section 903(d) of the act (21 U.S.C. 393(d)), and the Secretary of Health and Human Service's delegations to the Commissioner of Food and Drugs, statutory references to ''the Secretary'' in the discussion of legal authority have been changed to ''FDA'' or ''the agency.''

The Regulatory Flexibility Act requires agencies to analyze regulatory options that would minimize any significant impact of a rule on small entities. Currently, the agency does not believe that the proposed rule will have a significant economic impact on a substantial number of small entities. Nevertheless, we recognize our uncertainty regarding the number and size distribution of affected entities as well as the economic impact of the proposed rule on those entities. Therefore, the analysis presented below, along with other relevant sections of this document, constitutes the agency's initial regulatory flexibility analysis. The agency specifically requests detailed public comment regarding the number of affected small entities as well as the potential economic impact of the proposed rule on those entities.

Section 202(a) of the Unfunded Mandates Reform Act of 1995 requires that agencies prepare a written statement, which includes an assessment of anticipated costs and benefits, before proposing ''any rule that includes any Federal mandate that may result in an expenditure by State, local, and tribal governments, in the aggregate, or by the private sector, of $100,000,000 or more (adjusted annually for inflation) in any one year.'' The current threshold after adjustment for inflation is approximately $122 million, using the most current (2005) Implicit Price Deflator for the Gross Domestic Product. FDA does not expect this proposed rule to result in any one-year expenditure that would meet or exceed this amount.

A. Objectives of the Proposed Action

FDA is proposing this action to clarify and expand on an existing regulation (in place since 1987) that permits sponsors to charge patients for investigational drugs. Currently, FDA may authorize charging for an investigational drug used in a clinical trial or under a treatment IND or treatment protocol. This proposed rule would expand the agency's authority to permit charging for investigational drugs in a number of other situations. In clinical trial settings, the proposed rule would add provisions that permit charging for another entity's approved drug—either for use as an active control, as combination therapy with its own drug, or to study new indications. The proposed rule would also add provisions that permit charging for investigational drugs for all of the various types of expanded access for treatment use described under proposed subpart I of part 312. Finally, the proposed rule describes more specifically the types of costs that could be recovered when charging for an investigational drug.

B. The Need for the Proposed Rule

This proposed rule is needed for several reasons. The current charging regulation only provides for charging for a sponsor's own drug in a clinical trial. However, since the charging rule was adopted in 1987, FDA has received requests to charge in a clinical trial for approved drugs that must be obtained from another company. In one situation, an approved drug is being used in a clinical trial as an active control or in combination with the sponsor's drug. In another situation, a third party who is not a manufacturer requests permission to charge for an approved drug that is being studied in the hope of discovering new uses for that drug. The proposed rule would authorize charging for approved drugs in these situations and provide criteria governing such requests to charge.

The proposed rule is also needed to establish charging provisions for types of expanded access for treatment use other than the treatment IND or treatment protocol. Elsewhere in this issue of the **Federal Register**, FDA is proposing to amend part 312 of its regulations by adding subpart I concerning expanded access to investigational drugs for treatment use. In addition to the treatment IND or treatment protocol currently described in FDA regulations, the expanded access proposed rule would specifically authorize expanded access for individual patients, including in emergencies, and expanded access for intermediate size patient populations. The expanded access proposed rule is intended to improve access to investigational drugs for patients with serious or life-threatening conditions who have exhausted other therapeutic options and may benefit from such therapies. This proposed rule is necessary to establish provisions that would permit charging for investigational drugs for all of the types of expanded access use described under proposed subpart I.

Finally, the proposed rule is needed to clarify and better explain the types of costs sponsors are permitted to recover through charging. The current regulatory language describing the costs a sponsor can recover when charging for an investigational drug has proven difficult to interpret and apply. Some sponsors have interpreted the language broadly to permit recovery of costs much greater than those directly attributable to providing the investigational drug for the approved treatment use. In addition, ambiguities in the current regulatory language may have caused inefficiencies leading some drug sponsors to devote more resources than necessary to the preparation and submission of charging requests.

C. Why Allow Charging?

The expense of conducting a clinical trial is considered a normal cost of drug development that should be recovered through sales after marketing approval. However, in some clinical trial settings, a sponsor may incur extraordinary costs compared to typical drug development expenses. An extraordinary cost burden may arise because of unusually high manufacturing costs, the quantity of the drug required, the number of patients involved, the expected duration of treatment, or some combination of these factors. The agency believes that allowing cost recovery through charging may be appropriate in these instances, but only as a last resort source of funding to facilitate development of a promising new therapy that could not otherwise be developed.

In some clinical trials, it may be necessary for a sponsor to obtain an approved drug from another entity. The approved drug may be used as an active control or in combination with the sponsor's drug in a clinical trial designed to evaluate the effectiveness or safety of the sponsor's investigational drug. In these situations, the study subjects typically must receive some therapy for their disease or condition because using a placebo control would be unethical. In addition, the subjects often would be treated with the approved drug in the course of medical practice if they were not participating in the clinical trial. Therefore, FDA believes the threshold for charging in this situation should be lower than the threshold for charging for the sponsor's own investigational drug.

In other situations, an approved drug must be obtained by a third party (not the manufacturer) to study the drug in a clinical trial for a new indication or to obtain important safety information about an approved indication. Researchers conducting such clinical trials are primarily noncommercial entities who are not in the business of drug development. Typically, these sponsor-investigators conduct relatively small trials at a single site. Since such sponsors lack the resources of commercial sponsors and do not conduct the research for commercial purposes, they will not be able to recover the cost of obtaining the approved drug by marketing the drug, for example, for a new indication. The agency believes these kinds of trials should be encouraged because they may

yield important data about less commercially viable uses of a drug or additional drug safety information. Therefore, FDA believes the threshold for charging by a sponsor in this situation should be lower than the threshold for charging for the sponsor's own investigational drug.

In contrast to clinical trials, granting expanded access to investigational drugs for treatment use primarily benefits individual patients and is not intended typically to generate data needed to support marketing approval. Thus, the costs to sponsors associated with making a drug available for expanded access are not considered typical drug development expenditures. For this reason, the agency believes that it is generally more appropriate to permit sponsors to charge for expanded access to investigational drugs for treatment use. Allowing charging in expanded access settings may also provide financial incentives for sponsors to make investigational drugs more widely available in these situations.

D. Baseline for the Analysis

During the period 1997 through 2005, FDA received an average of 2,046.6 INDs per year. During this same period, the agency received an annual average of 22.6 requests to charge patients for investigational drugs. Thus, only about 1.1 percent (0.011 = 22.6 / 2,046.6) of all INDs received by the agency on an annual basis were associated with charging requests. Similarly, FDA received an average of 1.1 treatment IND or treatment protocol charging requests per year during this period. Thus, requests to charge under treatment INDs or treatment protocols were associated with about 0.06 percent (0.0006 = 1.1 / 2,046.6) of all INDs received by the agency each year. Finally, FDA received an average of 15.6 other charging requests per year during this period. These requests were to charge patients for expanded access to investigational drugs in situations other than individual patient or emergency INDs, and treatment INDs or treatment protocols. Such situations would generally include requests to charge for expanded access in intermediate-size patient populations and under clinical trials. Because the intermediate-size patient population IND or protocol is not currently established in regulation, a more precise distribution of other charging requests cannot be determined. Nevertheless, other charging requests were associated with about 0.76 percent (0.0076 = 15.6 / 2,046.6) of all INDs received by the agency each year from 1997 through 2005. This information is summarized in table 1 below.

TABLE 1. BASELINE DATA FOR NUMBER OF INDS AND CHARGING REQUESTS BY CATEGORY

Category	Total INDs	All Charging Requests	Treatment IND/ or Protocol Requests	Other Charging Requests
Number	2,046.6	22.6	1.1	15.6
Percent of all INDs	100.0%	1.1%	0.06%	0.76%

FDA also received an average of 659 individual patient and emergency INDs per year during the period 1997 through 2005. This number represents approximately 32.2 percent (0.322 = 659 / 2,046.6) of all INDs received by the agency each year. During this same period, FDA received an average of 7.1 charging requests for individual patient or emergency INDs or protocols per year. Thus, charging requests are associated with about 1.1 percent (0.0108 = 7.1 / 659) of all individual patient and emergency INDs or protocols received by the agency each year. This information is summarized in table 2 below.

TABLE 2: BASELINE DATA FOR NUMBER OF INDIVIDUAL PATIENT/EMERGENCY INDS

Category	Individual Patient or Emergency INDs	Charging Requests
Number	659.0	7.1
Percent	100.0%	1.1%

E. Nature of the Impact

The proposed rule would affect patients who lack effective therapeutic alternatives for serious and life-threatening conditions; sponsors who develop drugs to treat serious and life-threatening conditions; and FDA in determining whether to authorize charging for investigational drugs. By clarifying requirements and establishing the full range of situations in which it may be appropriate to charge for an investigational drug, the proposed rule would improve patient access by providing a financial incentive for sponsors to make promising therapies more widely available. Thus, this proposed rule should help to facilitate patient access to drugs that could not be provided without charging and permit sponsors to study drugs that might otherwise be too costly to develop.

By describing in regulation the full range of situations in which charging for an investigational drug may be permitted, this proposed rule would likely increase the volume of charging requests somewhat. However, by clarifying the circumstances under which charging would be permitted and specifying the types of costs that sponsors could recover, this proposed rule should also make the process of obtaining authorization to charge more transparent and more efficient. Given the small percentage of all INDs that include charging requests, FDA believes that the impact of the proposed rule will not be significant.

This proposed rule could also increase treatment expenses for some patients who obtain investigational drugs for which charging is permitted, or for third party payors if they choose to reimburse patients for some or all of the costs of such drugs. The agency believes that such costs would not be excessive and would be justified by the primary benefit of this proposed rule, making investigational drugs available for treatment use that could not otherwise be made available without charging. The potential impact of specific provisions of the proposed rule is discussed in greater detail in the following paragraphs.

1. Charging in a Clinical Trial

a. *Charging for a sponsor's drug in a clinical trial.* The existing charging regulation has permitted charging for investigational drugs in clinical trials intended to support marketing approval since 1987. This proposed rule is intended only to clarify the situations in which charging for a sponsor's investigational drug in such a clinical trial is appropriate. Therefore, FDA does not expect this proposed rule to have a significant effect on the number of requests to charge for sponsors'

investigational drugs in clinical trials to support initial marketing approval.

b. *Charging for an approved drug in a clinical trial.* As discussed in section II.A of this document, a major reason for revising the current charging regulation is to describe criteria for charging for approved drugs in clinical trials that are subject to part 312. These criteria are needed because the bulk of the requests to charge in the clinical trial setting have been requests to charge for approved drugs and the existing criteria do not readily apply to this situation.

By explicitly acknowledging that charging for an approved drug in a clinical trial subject to part 312 is possible under appropriate circumstances, this proposed rule should increase awareness of this option and thus stimulate requests to charge. The extent to which the volume of such requests might increase is uncertain. FDA's experience is that sponsors are most likely to request to charge when the drug is quite expensive and that expense represents a substantial burden relative to the sponsor's resources. Because prescription drugs are becoming increasingly expensive, it is reasonable to expect that approved products used in clinical trials will become increasingly expensive as well. However, because charging may affect a sponsor's ability to enroll subjects in clinical trials in a timely manner, FDA believes that sponsors will continue to be reluctant to charge unless the cost is truly burdensome. Therefore, FDA does not anticipate a substantial increase in the number of these requests to charge.

2. Charging for Expanded Access for Treatment Uses Described Under Proposed Subpart I

a. *Expanded access for individual patients.* FDA anticipates that there would be some increase in the number of requests to charge for investigational drugs for expanded access for individual patients. By establishing in regulation that it may be permissible to charge for an investigational drug for expanded access for individual patients, this proposed rule should increase awareness of the option to charge and thereby stimulate additional requests. In addition, as discussed in the preamble to the expanded access proposed rule, that rule is anticipated to initially increase the overall volume of expanded access for individual patients, which may also lead to some increase in the volume of requests to charge.

For the period 1997 through 2005, FDA received an average of 7.1 requests per year to charge for such use, or about 1.1 percent (0.011 = 7.1 charging requests/659 single patient INDs per year) of all individual patient treatment use. The extent to which the volume of requests to charge for expanded access for individual patients would increase under the proposed rule is uncertain. Historically, sponsors have been willing to provide an investigational drug to an individual patient free of charge in most cases, presumably because the cost is not great. However, this willingness may be tempered somewhat if there is an increase in the volume of requests for expanded access for individual patients received by a particular sponsor, especially if the cost of the drug is relatively high. There may also be some increase in the number of requests to charge for expanded access for individual patients because the prevalence of costly drugs is increasing. At this time, FDA has no reasoned basis to project a percentage increase in the number of charging requests for expanded access to investigational drugs for individual patients. However, because the cost of providing a drug to a single patient is usually not a substantial burden for a sponsor, FDA believes that the number of requests to charge for individual patient expanded access would continue to represent a relatively small percentage of such use.

b. *Expanded access for intermediate size patient populations.* By establishing in regulation that it is possible to charge for expanded access to an investigational drug for treatment use in an intermediate size patient population, the proposed rule should increase awareness that charging may be permitted for such uses, thereby stimulating requests to charge. Because access to expanded access for intermediate size patient populations has to date been authorized informally, FDA does not have records to indicate the number of times charging has been requested or permitted for this type of treatment use. If charging has been permitted in these situations, the authorizations would have been grouped with, and cannot be differentiated from, the authorizations to charge under clinical trials.

FDA does not anticipate a significant number of charging requests for expanded access for intermediate size patient populations. Historically, sponsors have been willing to provide drugs free of charge to a limited number of patients for treatment use. As in the case of expanded access for individual patients, we expect this behavior would continue.

c. *Treatment INDs and treatment protocols.* The agency's current regulations allowing charging for investigational drugs under a treatment IND or treatment protocol (in place since 1987) would be clarified, but not significantly altered, by the proposed rule. Therefore, the agency does not anticipate that the proposed rule would lead to a change in the number of requests to charge under treatment protocols or treatment INDs.

3. Costs Recoverable When Charging for an Investigational Drug

Finally, the proposed rule clarifies and better explains the types of costs sponsors are permitted to recover through charging. In particular, sponsors would be limited to recovery of the direct or marginal costs associated with making an investigational drug available for the approved treatment use. Direct costs that would be recoverable under the proposed rule include per unit manufacturing costs and shipping and handling costs. In addition, the proposed rule would permit sponsors to recover the costs of monitoring an expanded access protocol, complying with IND reporting requirements, and other administrative costs directly associated with expanded access for an intermediate size patient population and for a treatment IND or protocol.

4. Summary

The agency does not expect the number of requests to charge for a sponsor's drug in a clinical trial, or to charge for an investigational drug under a treatment IND or treatment protocol, to be affected because the proposed rule does not significantly change the existing regulation. The agency does expect some incremental impact from the proposed provisions that would allow charging for approved drugs in clinical trial and for expanded access for single patients and intermediate size patient populations. The agency believes the impact of these provisions would be limited for the reasons described previously in this document, but we are unable to estimate the quantitative impact because of a lack of reliable data. Thus, the following discussion describes, in general terms, the nature of the associated benefits and costs.

F. Benefits of the Proposed Rule

Because FDA currently has no data that would allow us to predict the quantitative impact of the proposed rule, it is not possible to accurately quantify the magnitude of any expected incremental benefits at this time. We would expect the number of requests to charge for investigational drugs for expanded access use to increase somewhat. However, the number of additional patients that would gain

access to investigational drugs as a result and the extent to which these patients would benefit from such access are highly uncertain.

Establishing in regulation all of the situations in which charging is permissible and clearly specifying the types of costs that are eligible for recovery would ease the administrative burdens associated with obtaining authorization to charge and could improve patient access to investigational drugs for treatment use. Private benefits would accrue to individual patients receiving the drugs, whereas social benefits would accrue if society also values these individual patient benefits. Because the overall impact of the proposed rule is not expected to be significant, the potential for any new regulatory benefits is somewhat limited.

In formulating the proposed rule, FDA considered the interests of patients, drug sponsors, and the general public. Concerning charging for investigational drugs in expanded access settings, the agency concluded that seriously ill patients could often benefit from increased access to investigational drugs that have not yet been approved for marketing. On the other hand, greater patient access to investigational drugs outside of the clinical trial setting could have the potential to delay approvals of drugs to treat serious and life-threatening conditions (e.g., by reducing incentives for potential subjects to enroll in clinical trials). If allowing charging were to adversely affect the drug approval process, the general population would experience diminished social benefits due to the reduced or delayed availability of new therapies approved for marketing by FDA.

The proposed rule would address this tension by allowing sponsors to charge for investigational drugs in expanded access settings as long as the sponsor provides reasonable assurance that charging will not interfere with development of the drug for marketing approval. In this way, the proposed rule would effectively address the interests of those patient populations that would benefit from having greater access to investigational drugs and the broader interests of society in having safe and effective therapies approved for marketing and widely available.

The proposed rule would limit sponsors to recovery of the direct or marginal costs associated with making the drug available. Direct costs that are recoverable under the proposed rule include per unit manufacturing costs and shipping and handling costs. Indirect or fixed costs incurred for joint or common objectives and physical plant and equipment expenditures for producing marketable quantities of the drug would be specifically excluded under the cost recovery provisions of the proposed rule. The agency believes that these cost recovery provisions would prevent sponsors from inappropriately shifting the normal financial risks associated with new drug development onto patients when they charge for drugs in clinical trial settings. For expanded access use, the limitation to direct cost recovery would also ensure that drug development costs that properly belong to sponsors are not shifted to patients.

G. Costs of the Proposed Rule

Although the proposed rule largely clarifies current agency practice, some additional paperwork costs would be incurred to the extent that the rule increases the total number of sponsor requests to charge patients for investigational drugs. The information requirements associated with the proposed rule are not expected to impose a significant burden. Drug sponsors who wish to charge for investigational drugs would need to review the rule to become familiar with its provisions and to gather the evidence and information necessary to support charging requests. Because of the lack of data described previously in this document, we are unable to generate quantitative estimates of compliance costs at this time. The agency expects that any incremental cost burdens would likely be small and widely dispersed among affected entities for a number of reasons.

First, regulations covering charging for investigational drugs in clinical trials and under treatment INDs or treatment protocols have been in place since 1987. As a result, the primary incremental impact of the proposed rule would be limited to the new charging provisions for the following: (1) Clinical trials using approved drugs and (2) the new mechanisms for expanded access for treatment use described under proposed subpart I of part 312. Second, the agency does not expect that these proposed charging provisions would lead to a large increase in the total number of charging requests. Because it is not usually extraordinarily expensive to make an investigational drug available to a single patient or a limited number of patients, the agency does not anticipate that the number of charging requests for expanded access to investigational drugs for single patients or intermediate size patient populations would increase substantially. Finally, requests to charge are relatively infrequent and the expense necessary to prepare a charging request would ordinarily be small compared to the overall cost of preparing the expanded access submission.

The agency estimates that, on average, 48 hours would be needed to prepare a request to charge under the proposed rule. This estimate is based on FDA's experience in reviewing charging requests under the 1987 regulation and on a projection of the increased paperwork burden associated with the proposed rule.

FDA believes that 80 percent, or about 38 hours, of this burden would be associated with establishing that the amount proposed to be charged is limited to the direct costs of making the drug available. The agency believes that the cost justification portion of the charging request would need to be performed by a cost accountant qualified to assess the direct costs of charging. Information available on the Internet indicates that median total compensation for a Cost Accountant IV (senior level) was approximately $102,000 per year in 2004 or about $49 per hour ($102,138/2,080 hours).[2] Thus the cost associated with certifying the amount to be charged is expected to be about $1,900 ($49 per hour x 38 hours) per charging request.

The remaining burden—20 percent or about 10 hours—for the preparation of a charging request would consist of a brief demonstration that the criteria for charging that are not related to the amount to be charged have been met. When the request is to charge for a drug used in a clinical trial, this information would ordinarily be available as part of the normal drug development process. When the request is to charge for a drug for expanded access, the primary criterion is to show that charging will not interfere with development of the drug for marketing. FDA believes that preparation of this portion of the charging request would likely be performed by a mid-level regulatory affairs person. Information available on the Internet indicates that the total median compensation for a Regulatory Affairs Specialist II (intermediate level) was approximately $80,000 or about $39 per hour in 2004 ($80,288/2,080 hours).[3] Thus, the cost to demonstrate

[2]See *http://swz.salary.com/salarywizard/layoutscripts/swzl_newsearch.asp*, last viewed 7/6/05. (FDA has verified the Web site address, but we are not responsible for subsequent changes to the Web site after this document publishes in the **Federal Register**.)

[3]See *http://swz.salary.com/salarywizard/layoutscripts/swzl_newsearch.asp*, last viewed 7/6/05. (FDA has verified the Web site address, but we

Continued

that a charging request meets appropriate criteria is about $400 (10 hours x $39 per hour) per charging request.

Based on the figures presented previously in this document, FDA estimates the cost to prepare and submit a charging request would thus be about $2,300 ($1,900 + $400). We also believe that the total costs associated with this proposed rule will be widely dispersed among affected entities because charging requests are rare, and thus, a particular sponsor would be expected to submit such a request very infrequently.

A significant concern with the proposed rule relates to the potential effect on access to investigational therapies for economically disadvantaged individuals and the uninsured. Allowing sponsors to charge could impose a significant financial burden on many seriously ill individuals who lack therapeutic alternatives and could preclude access by some needy patients. However, in the past, many companies that have provided investigational drugs for treatment use have often included assistance programs to cover the costs for those who could not otherwise afford them. FDA expects this practice would continue.

H. Minimizing the Impact on Small Entities

The agency does not believe that the proposed rule will have a significant economic impact on a substantial number of small entities. Nevertheless, we recognize our uncertainty regarding the number and size distribution of affected entities as well as the economic impact of the proposed rule on those entities. The agency specifically requests detailed public comment regarding the number of affected small entities as well as the potential economic impact of the proposed rule on those entities.

According to agency records, the majority of treatment INDs and treatment protocols (approximately 92 percent) are submitted by commercial sponsors and government agencies that are not likely to meet Small Business Administration (SBA) criteria defining a small entity in the relevant industry sector. Thus, the agency believes that the vast majority of requests to charge under expanded access submissions would not be submitted by small entities. Most single patient INDs are for treatment use and are submitted by individual physicians, and these entities would be classified as small entities. However, for reasons discussed previously, we do not anticipate that the volume of requests to charge for individual patient expanded access would increase substantially. Because expanded access for intermediate size patient populations is not currently tracked by the agency, no data exist that would allow the agency to identify either the number of sponsors in this category or the number that would qualify as small entities. FDA believes that requests to charge for investigational drugs in clinical trials of a sponsor's drug, whether the drug charged for is the sponsor's own drug or is an approved drug used for combination therapy or as an active control, would generally be submitted by large commercial drug sponsors. Requests to charge for an approved drug that is being studied for a new use would likely come from researchers or research organizations that meet the SBA standards for small business. In sum, the agency believes that some entities submitting charging requests would meet SBA small businesses criteria. However, because this determination is uncertain, the agency specifically requests detailed public comment regarding the number and size distribution of entities that would be affected by the proposed rule, as well as the economic impact of the rule on those entities. As discussed in section V.E of this document, the agency expects that any incremental burden associated with the proposed rule would be small and widely dispersed among affected entities.

FDA considered several alternatives to the proposed rule. Each is discussed in the following paragraphs:

- Do not revise the current charging rule.

FDA considered and rejected this alternative because the current charging rule does not address all of the types of requests to charge for drugs in clinical trials received by the agency. Furthermore, the current charging rule does not address all of the types of expanded access to investigational drugs for treatment use specified under proposed subpart I of part 312.

- Do not permit charging for approved drugs in clinical trials.

FDA considered this alternative. However, requests to charge for investigational drugs in a clinical trial would then be limited to requests to charge for the sponsor's drug that was being tested in the trial. In fact, the agency has received few such requests. Far more common are requests to charge for approved drugs in trials when the drugs must be obtained from another company. The approved drug may be used in a trial of the sponsor's drug as an active control or in combination with the sponsor's drug. Even more common are requests to charge for approved drugs used in studies by a third party (e.g., not the manufacturer) that are intended to evaluate the approved drug, for example, to discover a new use. FDA believes that requests to charge for investigational drugs in these situations may be appropriate; thus the agency believes the current charging rule should be revised to specifically contemplate such requests and to provide criteria applicable to such requests.

- Do not permit charging for expanded access for individual patients or for intermediate size patient populations.

FDA considered not revising the current regulation concerning charging for treatment use and thus permitting charging only for treatment INDs and treatment protocols. However, elsewhere in this issue of the **Federal Register**, the agency is proposing to amend its regulations concerning the treatment use of investigational drugs to specifically authorize expanded access for individual patients and for intermediate size patient populations. The purpose of that proposal is to expand access to investigational drugs. In some situations, permitting sponsors to charge for investigational drugs to be used by individual patients or by intermediate size patient populations may be the only way that such patients can receive access to these therapies because sponsors may not be willing to provide the drugs free of charge. Thus, consistent with the philosophy of the expanded access rule, the agency decided to propose to permit charging for investigational drugs in all expanded access settings to improve access to investigational drugs for patients with serious or life-threatening diseases or conditions who lack other therapeutic options and who may benefit from such therapies.

VII. Paperwork Reduction Act of 1995

This proposed rule contains collections of information that are subject to review by OMB under the Paperwork Reduction Act of 1995 (44 U.S.C. 3501–3520). ''Collection of information'' includes any request or requirement that persons obtain, maintain, retain, or report information to the agency, or disclose information to a third party or to the public (44 U.S.C. 3502(3) and 5 CFR 1320.3(c)). The title, description, and respondent description of the information collection are shown in the following paragraphs, with an

are not responsible for subsequent changes to the Web site after this document publishes in the **Federal Register**.)

estimate of the annual reporting burden. Included in the estimate is the time for reviewing instructions, gathering and maintaining the data needed, and completing and reviewing the collection of information.

FDA invites comments on the following topics: (1) Whether the proposed collection of information is necessary for proper performance of FDA's functions, including whether the information will have practical utility; (2) the accuracy of FDA's estimate of the burden of the proposed collection of information, including the validity of the methodology and assumptions used; (3) ways to enhance the quality, utility, and clarity of the information to be collected; and (4) ways to minimize the burden of the collection of information on respondents, including through the use of automated collection techniques, when appropriate, and other forms of information technology.

Title: Charging for Investigational Drugs

Description: The proposed rule describes the types of investigational uses for which a sponsor may be able to charge, including uses for which charging was not previously expressly permitted, and the criteria for allowing charging for the identified investigational uses. The proposed rule authorizes sponsors to request to charge for investigational drugs used in clinical trials and for investigational drugs for expanded access for treatment use. The proposed rule also describes the types of costs that can be recovered when charging for an investigational drug.

Section 312.8(a)(1) of the proposed rule provides that a sponsor who wishes to charge for an investigational drug must meet the criteria applicable to the specific sections of the proposal relating to charging in a clinical trial or charging for expanded access.

Section 312.8(b) of the proposed rule describes the criteria for charging in a clinical trial in three situations.

Proposed § 312.8(b)(1) describes criteria for charging for the sponsor's own drug in a clinical trial. To charge in this situation, the sponsor must show the following three things. The sponsor must:

- Provide evidence that the drug has a potential clinical benefit that, if demonstrated in the clinical investigations, would provide a significant advantage over available products in the diagnosis, treatment, mitigation, or prevention of a disease or condition;
- Demonstrate that the data to be obtained from the clinical trial would be essential to establishing that the drug is effective or safe for the purpose of obtaining initial approval of a drug, or would support a significant change in the labeling of an approved drug (e.g., new indication, inclusion of comparative safety information); and
- Demonstrate that the clinical trial could not be conducted without charging because the cost of the drug is extraordinary. The cost may be extraordinary due to manufacturing complexity, scarcity of a natural resource, the large quantity of drug needed (e.g., due to the size or duration of the trial), or some combination of these or other extraordinary circumstances.

Proposed § 312.8(b)(2) describes criteria for charging for an approved drug that a sponsor must obtain from another entity for use as an active control or in combination with another drug in a clinical trial designed to evaluate the effectiveness or safety of the sponsor's investigational drug. To charge for an approved drug in this situation, a sponsor must demonstrate that the trial is of adequate design to evaluate the safety or effectiveness of the sponsor's drug and that the drug is not being provided free of charge by its manufacturer.

Proposed § 312.8(b)(3) describes criteria for charging for an approved drug that must be obtained from another entity in a clinical trial designed to evaluate the approved drug (e.g., for another indication). To charge for an approved drug in this situation, a sponsor must demonstrate that the clinical trial of the approved drug is of adequate design to evaluate the safety or effectiveness of a new indication or provide important safety information related to an approved indication and that the drug is not being provided free of charge by its manufacturer.

Proposed § 312.8(c) describes criteria for charging for an investigational drug for in an expanded access setting. The general criterion to charge for expanded access for treatment use is that the sponsor provide reasonable assurance that charging will not interfere with developing the drug for marketing approval.

For treatment use under a treatment IND or treatment protocol, the sponsor must also provide the following:

- Evidence of sufficient enrollment in any ongoing clinical trial(s) needed for marketing approval to reasonably assure FDA that the trial(s) will be successfully completed as planned;
- Evidence of adequate progress in the development of the drug for marketing approval; and
- Information submitted under its general investigational plan (§ 312.23(a)(3)(iv)) specifying the drug development milestones the sponsor plans to meet in the next year.

Section 312.8(a)(2) of the proposed rule provides that a sponsor who wishes to charge for an investigational drug must justify the amount to be charged.

Section 312.8(d) of the proposed rule describes more specifically the costs that are potentially recoverable. Proposed § 312.8(d)(1) provides that a sponsor may recover only the direct costs of making the investigational drug available. Proposed § 312.8(d)(1)(i) defines direct costs as costs incurred by a sponsor that can be specifically and exclusively attributed to providing the drug for the investigational use for which FDA has authorized cost recovery. Direct costs include costs per unit to manufacture the drug (e.g., raw materials, labor, and nonreusable supplies and equipment used to manufacture the quantity of drug needed for the use for which charging is authorized) or costs to acquire the drug from another manufacturing source, and direct costs to ship and handle (e.g., store) the drug.

Proposed § 312.8(d)(1)(ii) states that indirect costs include costs that are incurred primarily to produce the drug for commercial sale. Such costs include, e.g., costs for facilities and equipment that are used to manufacture the supply of investigational drug, but that are primarily intended to produce large quantities of drug for eventual commercial sale and research and development, administrative, labor, or other costs that would be incurred even if the clinical trial or expanded access for which charging is authorized did not occur.

Proposed § 312.8(d)(2) provides that when the sponsor is charging for making the drug available for expanded access for an intermediate size patient population or for a treatment IND or protocol under subpart I, the sponsor may also recover the costs of monitoring the protocol, complying with IND reporting requirements, and other administrative costs directly associated with the expanded access in addition to the sponsor's direct costs.

Description of Respondents: Licensed physicians and manufacturers, including small business manufacturers.

Estimates of Reporting Burden

Table 1 of this document presents the estimated annualized reporting burden for the total number of charging requests. The estimates in the table have been derived in the following manner. Between 1999 and 2003, FDA received approximately 25 requests to charge for investigational drugs annually. FDA estimates that there will be a 25 to 50 percent increase in requests to charge if

the proposed rule is finalized. These requests are expected to be requests to charge for expanded access for single patients and intermediate size patient populations and for approved drugs in clinical trials. Accordingly, table 1 of this document gives the total annual responses as 38 (25 x 1.50 = 37.5). FDA's experience has been that, in general, a single sponsor does not make multiple requests to charge for investigational drugs in the same year. However, the agency anticipates that multiple requests may increase somewhat if, as we expect, the number of individual patient treatment uses increases. Thus, we have assumed that the number of annual respondents will be 35.

FDA believes the largest portion of the paperwork burden associated with the proposed rule would be to justify the request to charge by showing that the amount proposed to be charged is limited to the direct costs of making the drug available (proposed § 312.8(d)(1)). When the sponsor requests to charge for making the drug available for expanded access by an intermediate size patient population or through a treatment IND or treatment protocol, the sponsor may also recover the costs of monitoring the treatment use protocol, complying with IND reporting requirements, and other administrative costs directly associated with the expanded access (proposed § 312.8(d)(2)). The sponsor would also need to support its suggested charge for these expenses.

The remaining portion of the paperwork burden associated with the proposed rule would be to show that the criteria applicable to the specific type of charging request (i.e., the type of clinical trial (proposed § 312.8(b)) or type of expanded access (proposed § 312.8(c))) have been met.

FDA estimates the average number of hours needed to prepare a request to charge for an investigational drug under the proposed rule as 48. This estimate is based on FDA's experience in reviewing charging requests in the past and on a projection of the increased paperwork burden associated with the proposed rule.

TABLE 1.—ESTIMATED ANNUAL REPORTING BURDEN[1]

21 CFR Section	No. of Respondents	No. of Responses per Respondent	Total Annual Responses	Hours Per Response	Total Hours
312.8	35	1.08	38	48	1,824

[1]There are no capital costs or operating and maintenance costs associated with this collection of information.

VIII. Federalism

FDA has analyzed this proposed rule in accordance with the principles set forth in Executive Order 13132. FDA has determined that the rule does not contain policies that have substantial direct effects on the States, on the relationship between the National Government and the States, or on the distribution of power and responsibilities among the various levels of government. Accordingly, the agency has concluded that the rule does not contain policies that have federalism implications as defined in the Executive order and, consequently, a federalism summary impact statement is not required.

IX. Request for Comments

Interested persons may submit to the Division of Dockets Management (see **ADDRESSES**) written or electronic comments regarding this document. Submit a single copy of electronic comments or two paper copies of any mailed comments, except that individuals may submit one paper copy. Comments are to be identified with the docket number found in brackets in the heading of this document. Received comments may be seen in the Division of Dockets Management between 9 a.m. and 4 p.m., Monday through Friday.

List of Subjects in 21 CFR Part 312

Drugs, Exports, Imports, Investigations, Labeling, Medical research, Reporting and recordkeeping requirements, Safety.

Therefore, under the Federal Food, Drug, and Cosmetic Act and under authority delegated to the Commissioner of Food and Drugs, it is proposed that 21 CFR part 312 be amended as follows:

PART 312—INVESTIGATIONAL NEW DRUG APPLICATION

1. The authority citation for 21 CFR part 312 continues to read as follows:

Authority: 21 U.S.C. 321, 331, 351, 352, 353, 355, 356, 371, 381, 382, 383, 393; 42 U.S.C. 262.

§ 312.7 [Amended]

2. Section 312.7 is amended by removing paragraph (d) and by revising the section heading to read as follows:

§ 312.7 Promotion of investigational drugs.

* * * * *

3. Section 312.8 is added to subpart A to read as follows:

§ 312.8 Charging for investigational drugs.

(a) *General criteria for charging.* (1) A sponsor must meet the applicable requirements in paragraph (b) of this section for charging in a clinical trial or paragraph (c) of this section for charging for expanded access to an investigational drug treatment use under subpart I of this part.

(2) A sponsor must justify the amount to be charged in accordance with paragraph (d) of this section.

(3) A sponsor must obtain prior written authorization from FDA to charge for an investigational drug.

(4) FDA will withdraw authorization to charge if it determines that charging is interfering with the development of a drug for marketing approval or that the criteria for the authorization are no longer being met.

(b) *Charging in a clinical trial*—(1) *Charging for a sponsor's drug.* A sponsor who wishes to charge for its investigational drug, including investigational use of its approved drug, must:

(i) Provide evidence that the drug has a potential clinical benefit that, if demonstrated in the clinical investigations, would provide a significant advantage over available products in the diagnosis, treatment, mitigation, or prevention of a disease or condition;

(ii) Demonstrate that the data to be obtained from the clinical trial would be essential to establishing that the drug is effective or safe for the purpose of obtaining initial approval of a drug, or would support a significant change in the labeling of an approved drug (e.g., new indication, inclusion of comparative safety information); and

(iii) Demonstrate that the clinical trial could not be conducted without charging because the cost of the drug is extraordinary. The cost may be extraordinary due to manufacturing complexity, scarcity of a natural resource, the large quantity of drug needed (e.g., due to the size or duration of the trial), or some combination of these or other extraordinary circumstances.

(2) *Charging for an approved drug obtained from another entity for use as an active control or in combination with another drug.* A sponsor who wishes to charge for an approved drug that it must obtain from another entity for use as an active control or in combination with its investigational drug in a clinical trial of the sponsor's investigational drug must:

(i) Demonstrate that the clinical trial is adequately designed to evaluate the safety or effectiveness of the sponsor's drug; and

(ii) Demonstrate that the holder of the approved application is not providing the drug to the sponsor free of charge.

(3) *Charging for an approved drug obtained from another entity in a clinical trial of that drug.* A sponsor who wishes to charge for an approved drug that it must obtain from another source for use in a clinical trial intended to evaluate the acquired drug must:

(i) Demonstrate that the clinical trial is adequately designed to evaluate the safety or effectiveness of a new indication or to provide important safety information related to an approved indication; and

(ii) Demonstrate that the holder of the approved application is not providing the drug to the sponsor free of charge.

(4) *Duration of charging in a clinical trial.* Unless FDA specifies a shorter period, charging may continue for the length of the clinical trial.

(c) *Charging for expanded access to investigational drug for treatment use.* (1) A sponsor who wishes to charge for expanded access to an investigational drug for treatment use under subpart I of this part must provide reasonable assurance that charging will not interfere with developing the drug for marketing approval.

(2) For expanded access under § 312.320, such assurance must include:

(i) Evidence of sufficient enrollment in any ongoing clinical trial(s) needed for marketing approval to reasonably assure FDA that the trial(s) will be successfully completed as planned;

(ii) Evidence of adequate progress in the development of the drug for marketing approval; and

(iii) Information submitted under the general investigational plan (§ 312.23(a)(3)(iv)) specifying the drug development milestones the sponsor plans to meet in the next year.

(3) The authorization to charge is limited to the number of patients authorized to receive the drug under the treatment use, if there is a limitation.

(4) Unless FDA specifies a shorter period, charging for expanded access to an investigational drug for treatment use under subpart I of this part may continue for one year from the time of FDA authorization. A sponsor may request that FDA reauthorize charging for additional periods.

(d) *Costs recoverable when charging for an investigational drug.* (1) A sponsor may recover only the direct costs of making the investigational drug available.

(i) Direct costs are costs incurred by a sponsor that can be specifically and exclusively attributed to providing the drug for the investigational use for which FDA has authorized cost recovery. Direct costs include costs per unit to manufacture the drug (e.g., raw materials, labor, and nonreusable supplies and equipment used to manufacture the quantity of drug needed for the use for which charging is authorized) or costs to acquire the drug from another manufacturing source, and direct costs to ship and handle (e.g., store) the drug.

(ii) Indirect costs include costs incurred primarily to produce the drug for commercial sale (e.g., costs for facilities and equipment used to manufacture the supply of investigational drug, but that are primarily intended to produce large quantities of drug for eventual commercial sale) and research and development, administrative, labor, or other costs that would be incurred even if the clinical trial or treatment use for which charging is authorized did not occur.

(2) For expanded access to an investigational drug for treatment use under §§ 312.315 and 312.320, in addition to the direct costs described in paragraph (d)(1)(i) of this section, a sponsor may recover the costs of monitoring the expanded access IND or protocol, complying with IND reporting requirements, and other administrative costs directly associated with the expanded access.

(3) To support its calculation for cost recovery, a sponsor must provide supporting documentation to show that the calculation is consistent with the requirements of paragraphs (d)(1) and, if applicable, (d)(2) of this section.

Dated: December 6, 2006.

Jeffrey Shuren,

Assistant Commissioner for Policy.

[FR Doc. 06–9685 Filed 12–11–06; 10:01 am]

BILLING CODE 4160–01–S

PENSION BENEFIT GUARANTY CORPORATION

29 CFR Parts 4050 and 4281

RIN 1212–AB08

Mortality Assumptions

AGENCY: Pension Benefit Guaranty Corporation.

ACTION: Proposed rule.

SUMMARY: This proposed rule is a companion to PBGC's direct final rule (published today in the ''Rules and Regulations'' section of the **Federal Register**) making changes to the mortality assumptions under parts 4050 (Missing Participants) and 4281 (Duties of Plan Sponsor Following Mass Withdrawal) of its regulations. PBGC is making these changes as a direct final rule without prior proposal because we view them as non-controversial revisions and anticipate no significant adverse comment. We have explained our reasons in the preamble to the direct final rule. If we receive no significant adverse comment, no further action on this proposed rule will be taken. However, if we receive significant adverse comment, we will withdraw the direct final rule and it will not take effect. In that case, we will address all public comments in a subsequent final rule based on this proposed rule. We will not institute a second comment period on this rule. Any parties interested in commenting must do so at this time.

DATES: Comments must be received on or before January 16, 2007.

ADDRESSES: Comments, identified by RIN number 1212–AB08, may be submitted by any of the following methods:

- Federal eRulemaking Portal: *http://www.regulations.gov.* Follow the Web site instructions for submitting comments.
- E-mail: *reg.comments@pbgc.gov.*
- Fax: 202–326–4224.
- Mail or Hand Delivery: Legislative and Regulatory Department, Pension Benefit Guaranty Corporation, 1200 K Street, NW., Washington, DC 20005–4026.

All submissions must include the Regulatory Information Number for this rulemaking (RIN number 1212–AB08). Comments received, including personal information provided, will be posted to *http://www.pbgc.gov.* Copies of comments may also be obtained by writing to Disclosure Division, Office of the General Counsel, Pension Benefit Guaranty Corp., 1200 K Street, NW, Washington, DC 20005–4026 or calling

202–326–4040 during normal business hours. (TTY and TDD users may call the Federal relay service toll-free at 1–800–877–8339 and ask to be connected to 202–326–4040.)

FOR FURTHER INFORMATION CONTACT: Catherine B. Klion, Manager, or James L. Beller, Jr., Attorney, Regulatory and Policy Division, Legislative and Regulatory Department, Pension Benefit Guaranty Corp., 1200 K Street, NW., Suite 1200, Washington, DC 20005–4026; 202–326–4024. (TTY/TDD users may call the Federal relay service toll-free at 1–800–877–8339 and ask to be connected to 202–326–4024.)

SUPPLEMENTARY INFORMATION: In the ''Rules and Regulations'' section of today's **Federal Register**, PBGC is publishing a direct final rule making changes to the mortality assumptions under parts 4050 (Missing Participants) and 4281 (Duties of Plan Sponsor Following Mass Withdrawal) of its regulations. The provisions proposed here are those contained in the direct final rule. Please refer to the preamble and regulatory text of the direct final rule for further information and the actual text of the revisions. Additionally, all information regarding Statutory and Executive Orders for this proposed rule can be found in the Supplementary Information section of the direct final rule.

Issued in Washington, DC, this 8th day of December, 2006.

Vincent K. Snowbarger,

Interim Director, Pension Benefit Guaranty Corporation.

[FR Doc. E6–21279 Filed 12–13–06; 8:45 am]

BILLING CODE 7709–01–P

ENVIRONMENTAL PROTECTION AGENCY

40 CFR Part 63

[EPA–HQ–OAR–2002–0009; FRL–8256–2]

RIN 2060–AK22

National Air Emission Standards for Hazardous Air Pollutants, Halogenated Solvent Cleaning: Notice of Data Availability

AGENCY: Environmental Protection Agency (EPA).

ACTION: Notice of data availability.

SUMMARY: EPA is issuing this Notice of Data Availability (NODA) in support of the proposed rule issued August 17, 2006, entitled ''National Emission Standards for Hazardous Air Pollutants—Halogenated Solvent Cleaning''. EPA received a number of comments on the proposed rule and is in the process of evaluating those comments. This NODA addresses certain new data and information that EPA received concerning the unique nature and size of the degreasing machines used by the following facilities: narrow tubing manufacturing facilities, facilities that manufacture specialized products requiring continuous web cleaning, aerospace manufacturing and maintenance facilities, large military vehicle maintenance operations, and facilities that use multiple degreasing machines. Specifically, the new data and information that form the basis of this NODA relates to the following three issues; the ability of the above-noted facilities meeting the proposed facility-wide emission limits; the cost impacts associated with the above-noted facilities implementing the proposed facility-wide emission limits; and, the time frame needed for the above-noted facilities to comply with the proposed facility-wide emission limits.

Although we recognize that the public has access to comments submitted during the comment period, we are nonetheless issuing this NODA because the new data and information at issue in this NODA are directly relevant to the alternative proposed standards described in the proposed rule. We are seeking comment only on the three issues identified above that relate to the unique nature and size of the degreasing machines used by the facilities specified above. We do not intend to respond to comments addressing any other aspect of the proposed rule.

DATES: Comments on the NODA must be received on or before January 29, 2007.

ADDRESSES: Comments on the NODA should be submitted to Docket ID No. EPA–HQ–OAR–2002–0009. Comments may be submitted by one of the following methods: Federal eRulemaking Portal: *http://http://www.regulations.gov*. Follow the on-line instructions for submitting comments.

Agency Web site: *http://www.epa.gov/edocket*. EDOCKET, EPA's electronic public docket and comment system is EPA's preferred method for receiving comments. Follow the on-line instructions for submitting comments.

E-mail: *A-and-R-Docket@epa.gov*.

Mail: Air Docket, National Emission Standards for Hazardous Air Pollutants—Halogenated Solvent Cleaning, Environmental Protection Agency, Mail Code: 6102T, 1200 Pennsylvania Avenue, NW., Washington, DC 20460. Please include a total of two copies.

Hand Delivery: EPA Docket Center, 1301 Constitution Avenue, NW., Room B108, Washington, DC. Such deliveries are only accepted during the Docket's normal hours of operation, and special arrangements should be made for deliveries of boxed information.

Note: The EPA Docket Center suffered damage due to the flooding during the last week of June 2006. The Docket Center is continuing to operate. During the cleanup, however, there will be temporary changes to Docket Center telephone numbers, addresses, and hours of operation for people who wish to make hand deliveries or visit the Public Reading Room to view documents. Consult the EPA Web site at *http://www.epa.gov/eaphome/dockets.htm* for current information on docket operations, locations and telephone numbers. The Docket Center's mailing address for U.S. mail and the procedure for submitting comments to *www.regulations.gov* are not affected by the flooding and will remain the same.

Instructions: Direct your comments on the NODA to Docket ID No. EPA–HQ–OAR–2002–0009. The EPA's policy is that all comments received will be included in the public docket(s) without change and may be made available online at *http://www.epa.gov/edocket*, including any personal information provided, unless the comment includes information claimed to be Confidential Business Information (CBI) or other information whose disclosure is restricted by statute. Do not submit information that you consider to be CBI or otherwise protected through EDOCKET, regulations.gov, or e-mail. The EPA EDOCKET and the Federal regulations.gov Web sites are ''anonymous access'' systems, which means EPA will not know your identity or contact information unless you provide it in the body of your comment. If you send an e-mail comment directly to EPA without going through EDOCKET or regulations.gov, your E-mail address will be automatically captured and included as part of the comment that is placed in the public docket and made available on the Internet. If you submit an electronic comment, EPA recommends that you include your name and other contact information in the body of your comment and with any disk or CD–ROM you submit. If EPA cannot read your comment due to technical difficulties and cannot contact you for clarification, EPA may not be able to consider your comment. Electronic files should avoid the use of special characters, any form of encryption, and be free of any defects or viruses.

Docket: All documents in the docket are listed in the EDOCKET index at *http://www.epa.gov/edocket*. Although listed in the index, some information is

not publicly available (i.e., CBI or other information whose disclosure is restricted by statute). Certain other material, such as copyrighted material, is not placed on the Internet and will be publicly available only in hard copy form. Publicly available docket materials are available either electronically in EDOCKET or in hard copy at the EPA Docket Center, EPA West, Room B102, 1301 Constitution Avenue, NW., Washington, DC. The Public Reading Room is open from 8:30 a.m. to 4:30 p.m., Monday through Friday, excluding legal holidays. The telephone number for the Public Reading Room is (202) 566–1744, and the telephone number for the Air Docket is (202) 566–1742.

FOR FURTHER INFORMATION CONTACT: H. Lynn Dail, U.S. EPA, Office of Air Quality Planning and Standards, Sector Policies and Planning Division, Natural Resources and Commerce Group (E143–03), Research Triangle Park, North Carolina 27711, telephone number (919) 541–2363, e-mail at *dail.lynn@epa.gov*.

SUPPLEMENTARY INFORMATION: The information presented in this NODA is organized as follows:

I. Additional Information on Submitting Comments
- A. How Can I Help EPA Ensure That My Comments Are Reviewed Quickly?
- B. What Should I Consider as I Prepare My Comments for EPA?
- 1. Submitting CBI
- 2. Tips for Preparing Your Comments

II. Why Is EPA Issuing This NODA and What Are the Issues on Which EPA Is Soliciting Comment?

III. Proposed Emission Limit Options
- A. What Are the Proposed Emissions Limits?
- B. What Is the New Information or Data That EPA Is Making Available for Review and Comment?
- C. What Additional Supporting Data or Documentation Do I Need To Provide With My Comments?

IV. EPA's Proposed Cost Assessment
- A. What Are the Estimated Compliance Costs?
- B. What Is the New Information EPA Is Making Available for Review and Comment?
- C. What Additional Supporting Data or Documentation Do I Need To Provide With My Comments?

V. EPA's Proposed Compliance Schedule
- A. What Is the Proposed Compliance Schedule?
- B. What Is the New Information EPA Is Making Available for Review and Comment?
- C. What Additional Supporting Data or Documentation Do I Need To Provide With My Comments?

I. Additional Information on Submitting Comments

A. How Can I Help EPA Ensure That My Comments Are Reviewed Quickly?

To expedite review of your comments by Agency staff, you are encouraged to send a separate copy of your comments, in addition to the copy you submit to the official docket, to H. Lynn Dail, U.S. EPA, Office of Air Quality Planning and Standards, Natural Resources and Commerce Group, Mail Code E143–03, Research Triangle Park, North Carolina 27711, telephone (919) 541–2363, e-mail *dail.lynn@epa.gov*.

B. What Should I Consider as I Prepare My Comments for EPA?

1. Submitting CBI. Do not submit CBI information to EPA through EDOCKET, regulations.gov, or e-mail. Clearly mark the part or all of the information that you claim to be CBI. For CBI information on a disk or CD ROM that you mail to EPA, mark the outside of the disk or CD ROM as CBI and then identify electronically within the disk or CD ROM the specific information that is claimed as CBI. In addition to one complete version of the comment that includes information claimed as CBI, a copy of the comment that does not contain the information claimed as CBI must be submitted for inclusion in the public docket.

Information or documents declared as CBI will not be disclosed except in accordance with procedures set forth in 40 CFR part 2.

2. Tips for Preparing Your Comments. When submitting comments, remember to:

a. Identify the rulemaking by docket number and other identifying information (subject heading, **Federal Register** date and page number).

b. Follow directions—The Agency may ask you to respond to specific questions or organize comments by referencing a Code of Federal Regulations (CFR) part or section number.

c. Explain why you agree or disagree; suggest alternatives and substitute language for your requested changes.

d. Describe any assumptions and provide any technical information and/or data that you used.

e. If you estimate potential costs or burdens, explain how you arrived at your estimate in sufficient detail to allow for it to be reproduced.

f. Provide specific examples to illustrate your concerns, and suggest alternatives.

g. Make sure to submit your comments by the comment period deadline identified.

II. Why Is EPA Issuing This NODA and What Are the Issues on Which EPA Is Soliciting Comment?

In August 2006, pursuant to CAA sections 112(d)(6) and (f)(2), EPA issued the proposed rule entitled, ''National Emission Standards for Hazardous Air Pollutants—Halogenated Solvent Cleaning'' (Docket ID No. EPA–HQ–OAR–2002–0009) (the ''proposed rule''). See 71 FR 47670 (Aug. 17, 2006). In developing the proposed rule, EPA used the best available data that it had before it at the time. Detailed background information describing the proposed rulemaking may be found in the proposed rule and the docket in support of that rule.

During the public comment period, EPA received certain new data and information concerning the unique nature and size of the degreasing machines used by the following facilities: narrow tubing manufacturing facilities, facilities that manufacture specialized products requiring continuous web cleaning,[1] aerospace manufacturing and maintenance facilities, large military vehicle maintenance operations, and facilities that use multiple degreasing machines. The new data and information at issue in this NODA are directly relevant to the alternative proposed standards described in the proposed rule. To better inform our decision making, we are identifying the new data and information received from the above-noted facilities and soliciting comment on the following three discrete issues: (1) The ability of the above-noted facilities meeting the proposed facility-wide emission limits, (2) the cost impacts associated with the above-noted facilities implementing the proposed facility-wide emission limits, and (3) the time frame needed for the above-noted facilities to comply with the proposed facility-wide emission limits. The EPA will consider only comments, data or information related to these three issues. We do not intend to respond to comments addressing any other aspect of the proposed rule.

All the comments, information and data submitted by commenters and discussed in this NODA are available in the Air Docket, National Emission

[1] On December 2, 1994, EPA promulgated HSC NESHAP that established both control device and work practice requirements for batch and in-line solvent cleaning machines (59 FR 61801). Continuous web cleaning machines are a subset of in-line cleaning machines. Subsequently, we clarified the applicability of certain compliance options under the HSC NESHAP, and also specified alternative compliance requirements for continuous web cleaning machines (64 FR 67793, 67794–67796 (December 3, 1999)).

Standards for Hazardous Air Pollutants—Halogenated Solvent Cleaning, Environmental Protection Agency, Docket ID No. EPA–HQ–OAR–2002–0009.

III. Proposed Emissions Limit Options

A. What Are the Proposed Emissions Limits?

The proposed rule presented an emissions limit approach whereby emissions of the hazardous air pollutants (HAP), perchloroethylene (PCE), trichloroethylene (TCE), and methylene chloride (MC) from facilities operating halogenated solvent cleaning machines are capped at levels determined to protect public health with an ample margin of safety and to prevent adverse environmental effects.[2]

Specifically, under the proposed rule, the owner or operator of each affected facility would ensure that the facility-wide PCE, TCE, and MC emissions from all halogenated solvent cleaning machines subject to the MACT standards are less than or equal to specific solvent emissions limits, as identified in the proposed rule. The proposed rule identified six different regulatory alternatives in this regard, including the two co-proposed options of 25,000 kilograms per year (kg/yr) and 40,000 kg/yr of MC equivalent.

We believe that there are multiple ways in which facilities can comply with the proposed rule, and while we analyzed and identified in the proposed rule some of the methods that may effectively reduce emissions, we neither proposed specific compliance options nor did we limit the options by which facilities could comply. Under the proposed revised standards, the HSC MACT requirements for all applicable new and existing sources would remain applicable. See 71 FR 47675–47676 and 47683–47684 for a complete discussion of the proposed facility-wide solvent emission limit and compliance options. Nothing in the proposed rule precludes a facility from using a compliance option not identified in the proposal. Sources may implement compliance options identified in the MACT or whatever compliance options they choose regardless of whether it is mentioned in the August 2006 proposal or the MACT.

B. What Is the New Information or Data That EPA Is Making Available for Review and Comment?

- Comments and data provided by the Halogenated Solvents Industry Alliance (HSIA) concerning the technical infeasibility of using solvent switching, retrofitting, and installation of vacuum-to-vacuum machines on applications in the narrow tubing and aerospace industries, facilities that use continuous web cleaners and large military vehicle maintenance facilities. HSIA states that these degreasing applications use large machines and the current low-emitting cleaning machines are technically infeasible because these industries degrease parts of uncommon sizes and shapes that these machines have not been commonly designed to handle. The commenter provides instances where particular companies have installed low-emitting equipment yet were unable to meet the 1994 HSC NESHAP. The commenter stated that the EPA should revise its emission reduction estimate for vacuum cleaning machines and have this new estimate confirmed by companies that have recently installed vacuum-to-vacuum machines.
- Comments and data provided by the American Safety Razor Company, concerning the technical infeasibility of solvent switching, retrofitting and vacuum-to-vacuum machines for facilities using continuous web cleaning machines because the cleaning process is so unique and different from the other forms of degreasing, batch cold and vapor cleaning. The commenter states that EPA incorrectly concluded that solvent switching will work for continuous web cleaners because, according to the commenter, a majority of alternative HAP and non-HAP solvents are incompatible with its products. Without any supporting data, the commenter also states that EPA's proposal significantly overstates the potential for emission reductions in the source category.
- Comments and data provided by Delta Air Lines suggesting that EPA should establish limits on each degreaser in terms of either kilograms per degreaser or kilograms per square meter of solvent/air interface area. The commenter indicates that low-emitting technology such as the vacuum-to-vacuum machines are not feasible when considering the unique shape and size of the parts they clean because of shape, size, metallurgy, corrosion resistance and that many aerospace maintenance procedures are approved by the Federal Aviation Administration. The commenter further suggests that EPA create emissions limits for an aerospace degreasing subcategory.
- Comments and data provided by Spirit Aerosystems on compliance options for the proposed facility-wide emissions limits. The commenter compels EPA to consider regulatory approaches other than the single facility-wide emissions limit that do not result in a disproportionate and unfair regulatory burden on large facilities with unique, complex and stringent production requirements related to materials cleaning and for whom few compliance options are available. In simple terms, the commenter states that reducing emissions to the emission limit, when compared to smaller facilities, the aerospace facilities faces greater liability and burden than most other degreasing facilities.
- Comments provided by Eastman Kodak Company indicate their belief that facility-wide emission limits leave source owners only two compliance options: (1) establish internal production restrictions or (2) install add-on capture and control equipment to insure operating flexibility.
- Comments and data provided by narrow tubing manufacturers, such as Salem Tubing, Superior Tubing, Plymouth Tubing, Accellent Endoscopy and Summerill Tubing, on the technical infeasibility of achieving the degree of emissions reduction projected by EPA. The commenters contend that there may be no technology or degreasing method available to their industry that would allow them to reduce emissions further. The commenters state that switching to an alternative solvent could present a myriad of problems including incompatibility with materials being cleaned, solvent performance, and worker safety concerns, especially with MC. The commenters also explain that many facilities have retrofitted their equipment and that emission reduction option would not be available to them. They also state that vacuum-to-vacuum cleaning machines have not been engineered or built to the large size necessary to effectively degrease specialized tubing such as 40-foot lengths of tubing and large coils. The commenters provided data to support these comments.

C. What Additional Supporting Data or Documentation Do I Need To Provide With My Comments?

The EPA is soliciting comment on the new data provided. EPA also seeks additional data and information concerning the specific comments described above that relate to the three issues identified at the outset of this NODA. In addition, with respect to narrow tubing manufacturing facilities, aerospace manufacturing and maintenance facilities, large military vehicle maintenance operations, facilities that use multiple degreaser machines, and facilities that use continuous web cleaners, EPA seeks

[2] EPA's proposed determination pursuant to CAA section 112(d)(6) is set forth in the proposed rule at 71 FR 47684–47685.

additional data and information from these facilities that includes, but is not limited to, any technology or other methods or approaches that may achieve the proposed emission limits. The EPA is also requesting that commenters provide detailed comments if their responses indicate that there are no technologies or other methods available or feasible. Commenters may also provide details of any barriers that may exist to prevent lowering of emission levels. The EPA further requests that commenters provide data on the operational life expectancy of HSC machines, and the difference in floor space needed to install low-emitting machines.

IV. EPA's Proposed Cost Assessment

A. What Are the Estimated Compliance Costs?

Pursuant to the CAA section 112(f), EPA evaluated the remaining risk to public health and the environment following implementation of the technology-based rule for HSC machines. The EPA proposed more stringent standards in order to protect the public health with an ample margin of safety and to prevent adverse environmental impacts. In the second step of the ample margin of safety analysis, EPA considered the issue of costs consistent with section 112(f)(2).

EPA analyzed and presented the nationwide cost impacts and emissions reductions associated with each of the six regulatory alternatives identified in the proposal. Two of those alternatives include the 25,000 kilograms per year (kg/yr) and 40,000 kg/yr of MC equivalent alternatives noted above. See 71 FR 47681–47683 for a complete discussion of our estimated costs to reduce HAP emissions from HSC machines.

B. What Is the New Information EPA Is Making Available for Review and Comment?

- Comments and cost information for design and installation of new vacuum-to-vacuum machines was provided by the narrow tube manufacturers. They also included comments and data that indicates that EPA's capital cost basis is approximately fifteen times below industry projected costs range. They also indicate that EPA failed to factor in the costs associated with facilities expanding current building to accommodate vacuum-to-vacuum machines that may require a larger floor space.
- Comments and data provided by an aerospace industry association indicates that EPA understated compliance costs for the aerospace industry because any action by the facility to switch solvents must go through a rigorous approval process to meet the requirements of the original equipment manufacturer and the Federal Aviation Administration (FAA) to ensure that safety and quality criteria are met. This process is not a common process for other HSC facilities. The commenter also reports that there are few manufacturers of vacuum-to-vacuum degreasing machines and they are not aware if the technology can effectively degrease parts of specific types and sizes. The commenter reported that similar facilities that installed the technology incurred costs of over $1 million with new annualized costs of approximately $80,000 per year.
- Comments and data provided by the HSIA indicating that EPA failed to meet the duty to reasonably consider the economic effects of the rulemaking on small businesses. Comments and data provided by HSIA indicate that EPA's costs are understated because, in actuality, fewer facilities than estimated by EPA can comply with the rule by switching solvent, and more facilities would need to use a more costly method to comply with the rule. The HSIA asserts that, even assuming that emission control technology and/or low-emitting cleaning machines such as vacuum-to-vacuum machines can be adapted to the very specific degreasing requirements for the aerospace and the narrow tubing industries, the cost of installing vacuum-to-vacuum machines at facilities with very large degreasing operations would be cost prohibitive. HSIA provides data supporting this assertion.
- Comments and data provided by Plymouth Tubing indicate that most companies using larger machines are able to purchase solvent at significant savings, per unit cost. The commenter contends that EPA solvent cost was estimated at $1.05 per pound. That cost is significantly higher that the $0.71 per pound of fresh unused TCE the commenter purchases. The commenter indicates that the cost savings EPA anticipated with reduced solvent use is significantly overstated.

C. What Additional Supporting Data or Documentation Do I Need To Provide With My Comments?

EPA is soliciting comment on the new data provided. EPA also seeks additional data and information concerning the specific comments described above that relate to the three issues identified at the outset of this NODA. In addition, as for the narrow tubing manufacturing facilities, aerospace manufacturing and maintenance facilities, large military vehicle maintenance operations, facilities that use multiple degreaser machines, and facilities that use continuous web cleaners, EPA specifically seeks data and information from these facilities including, but not limited to, information on the costs (capital and operating) to achieve the proposed facility-wide emission limits.

EPA also requests that commenters provide specific cost data on the cleaning machines used by the above-named specific industries that may include, but is not limited to, the costs of machine replacement with low emitting machine technology, the costs associated with applying emission capture and control technology, the costs of operating and maintaining such systems, the costs of installing emission control systems or low-emitting machines, the costs of clean unused solvent, and the cost of switching solvent to a non-HAP solvent or to a solvent with less health effects.

EPA is also requesting commenters that identify new technology, methods or processes for compliance other than those EPA analyzed in the proposed rule to provide the associated costs of such new technology, methods or processes. Commenters may provide comments on barriers to implementing new technology, methods or processes.

Commenters may also provide comments with supporting data on any production rate increases or losses that may occur at the types of facilities discussed in this notice when complying with the proposed emission limits.

V. EPA's Proposed Compliance Schedule

A. What Is the Proposed Compliance Schedule?

In our proposed rule, we proposed a compliance deadline of 2 years for existing sources of halogenated cleaning machines to comply with the proposed emissions limits. We also indicated that the CAA section 112(f)(4)(B) states that EPA may grant a waiver of up to an additional 2 years after the effective date of a standard if more time is needed to install controls or implement steps to assure that the health of persons will be protected from imminent endangerment. We said we believed the proposed compliance deadline was both reasonable and realistic for any affected facility that has to plan their control strategy, purchase and install the control device(s), and bring the control device online. See 71 FR 47684 for a

complete discussion of the proposed compliance deadline.

B. What Is the New Information EPA Is Making Available for Review and Comment?

• Comments provided by Aerospace Industry Association and an airline, indicating that changing solvents involves a rigorous approval process to meet requirements of the Federal Aviation Administration (FAA) and of the original equipment manufacturer (OEM). The commenter indicates that such an approval process takes considerable time and requires many steps.

• Comments provided by HSIA indicated that a compliance period of as much as 10 years would be required for industry to complete the multi-step process of upgrading degreasing operations. The commenter cites installations of new equipment at an existing facility may require the following: (1) Extended time to test performance of untried degreasing technologies for their particular application, (2) additional or redesigned floor space, (3) customer approval of new degreasing techniques and machines, (4) amending air permits; (5) amending government agency directives on cleaning protocols. HSIA did not submit data to support this comment.

• Comments and data provided by the American Safety Razor Company indicated that EPA should remain consistent with the proposed HON rule and provide affected facilities three (3) years after the effective date of the promulgated standard.

• Comments and data provided by Salem Tubing Company on the compliance period for sources of existing HSC machines and constructed or reconstructed HSC machines after August 17, 2006. The facility indicated that vacuum-to-vacuum cleaning is not a feasible option for the narrow tube manufacturing industry because of the large size of their degreasing machines and the fact that the vacuum-to-vacuum technology is not currently available in the machines sizes required. The commenter contends that in order to design, test and implement such a system would take much longer than the proposed compliance period.

• Comments provided by the HSIA indicated that the compliance schedule should be amended to (1) require new facilities constructed after the date of promulgation to be in compliance upon startup; (2) consider new facilities constructed prior to the date of promulgation to be existing facilities; (3) allow existing HSC facilities that installed new equipment after the date of proposal, but prior to the date of promulgation, 10 years to come into compliance with any new requirements consistent with CAA section 112(i)(7), and (4) allow the maximum amount of time possible for existing HSC facilities to come into compliance.

C. What Additional Supporting Data or Documentation Do I Need To Provide With My Comments?

EPA is soliciting comment on the new information provided described above that relates to the issues identified at the outset of this NODA. In addition, as for the narrow tubing manufacturing facilities, aerospace manufacturing and maintenance facilities, large military vehicle maintenance operations, facilities that use multiple degreaser machines, and facilities that use continuous web cleaners, EPA specifically seeks data and information from these facilities including, but not limited to, information on the time to design and install new HSC machines, the lifespan of the typical HSC machine used in the facilities of interest (listed above), the time required to seek additional permits from State and local air permitting agencies, the time required for FAA and OEM approvals to vary or change degreasing cleaning procedures, whether a 2-year or a 3-year compliance period is appropriate, or data on how much time it would take to comply with the proposed requirements.

List of Subjects in 40 CFR Part 63

Environmental protection, Administrative practice and procedure, Air pollution control, Hazardous substances, Intergovernmental relations, Reporting and recordkeeping requirements.

Dated: December 8, 2006.

Stephen D. Page,

Director, Office of Air Quality Planning and Standards.

[FR Doc. E6–21296 Filed 12–13–06; 8:45 am]

BILLING CODE 6560–50–P

DEPARTMENT OF DEFENSE

GENERAL SERVICES ADMINISTRATION

NATIONAL AERONAUTICS AND SPACE ADMINISTRATION

48 CFR Parts 32 and 52

[FAR Case 2005–016; Docket 2006–0020; Sequence 14]

RIN 9000–AK64

Federal Acquisition Regulation; FAR Case 2005–016, Performance-based Payments

AGENCIES: Department of Defense (DoD), General Services Administration (GSA), and National Aeronautics and Space Administration (NASA).

ACTION: Proposed rule.

SUMMARY: The Civilian Agency Acquisition Council and the Defense Acquisition Regulations Council (Councils) are proposing to amend the Federal Acquisition Regulation (FAR) to implement recommendations to change the regulations related to performance-based payments (PBP).

DATES: Interested parties should submit written comments to the FAR Secretariat on or before February 12, 2007 to be considered in the formulation of a final rule.

ADDRESSES: Submit comments identified by FAR case 2005–016 by any of the following methods:

• Federal eRulemaking Portal: *http://www.regulations.gov*. Search for any document by first selecting the proper document types and selecting ''Federal Acquisition Regulation'' as the agency of choice. At the ''Keyword'' prompt, type in the FAR case number (for example, FAR Case 2006–001) and click on the ''Submit'' button. Please include any personal and/or business information inside the document.You may also search for any document by clicking on the ''Advanced search/document search'' tab at the top of the screen, selecting from the agency field ''Federal Acquisition Regulation'', and typing the FAR case number in the keyword field. Select the ''Submit'' button.

• Fax: 202–501–4067.

• Mail: General Services Administration, Regulatory Secretariat (VIR), 1800 F Street, NW, Room 4035, ATTN: Laurieann Duarte, Washington, DC 20405.

Instructions: Please submit comments only and cite FAR case 2005–016 in all correspondence related to this case. All comments received will be posted

without change to *http://www.regulations.gov*, including any personal and/or business confidential information provided.

FOR FURTHER INFORMATION CONTACT: For clarification of content, contact Mr. Jerry Olson at (202) 501–3221. For information pertaining to status or publication schedules, contact the FAR Secretariat at (202) 501–4755. Please cite FAR case 2005–016.

SUPPLEMENTARY INFORMATION:

A. Background

The proposed changes to FAR 32.1000, 32.1003, 32.1004, 32.1005, and 32.1007 and the clause at 52.232–32 are intended to increase the use of performance-based payments as the method of contract financing on Federal Government contracts, and improve the efficiency of performance-based payments when used on these contracts. These proposed changes originated from recommendations submitted by the Department of Defense Performance-based Payments Working Group in their March 8, 2005 report. This is not a significant regulatory action and, therefore, was not subject to review under Section 6(b) of Executive Order 12866, Regulatory Planning and Review, dated September 30, 1993. This rule is not a major rule under 5 U.S.C. 804.

B. Discussion

The Councils are proposing to revise the following FAR provisions:

1. The current FAR 32.1001(e) is renumbered to (d) and rephrased to require payments to be made in accordance with each agency's policy.

2. FAR 32.1001(e) is moved from 32.1000 to clarify when use of PBPs is appropriate.

3. FAR 32.1003 is revised to specifically address when PBP's may be used. This revised language clarifies use of PBPs on fixed-priced line items and orders and on Indefinite Delivery-Indefinite Quantity and non-Indefinite Delivery contracts.

4. FAR 32.1004(a)(1), to clarify that events not requiring meaningful effort or action must not be included as events or criteria for PBPs. FAR 32.1004(a)(2)(iii), to specifically state that all cumulative events be identified. FAR 32.1004(b)(2)(ii) requires that the contracting officer must document the rationale for establishing a performance-based payment rate that is below the applicable progress payment rate. FAR 32.1004(c) is added (and the existing (c) renumbered) to clarify that the contracting officer shall not limit the amount of a PBP payment to a percentage of actual incurred cost for the scheduled event or performance criteria. FAR 32.1004(e)(1)(ii) is renumbered to 32.1004(f)(1)(ii) and revised to clarify that solicitations related to competitive source selections should state that the evaluation of the proposed prices will include an adjustment to reflect the estimated cost to the Government of providing each offeror's proposed PBP terms.

5. FAR 32.1007(a) is revised to clarify that the contracting officer responsible for administering the performance-based payments should also be responsible for reviewing, approving, and transmitting the payment requests to the payment office. FAR 32.1007(c) is revised to prohibit actual cost verification unless the purpose is to assist in establishing revised or new PBP milestones or values.

C. Regulatory Flexibility Act

The Councils do not expect this proposed rule to have a significant economic impact on a substantial number of small entities within the meaning of the Regulatory Flexibility Act, 5 U.S.C. 601, *et seq.*, because this rule should reduce administrative costs for contractor and the Government, thus further encouraging the use of performance based payments. An Initial Regulatory Flexibility Analysis has, therefore, not been performed. We invite comments from small businesses and other interested parties. The Councils will consider comments from small entities concerning the affected FAR Parts 32 and 52 in accordance with 5 U.S.C. 610. Interested parties must submit such comments separately and should cite 5 U.S.C. 601, *et seq.* (FAR case 2005–016), in correspondence.

D. Paperwork Reduction Act

The Paperwork Reduction Act does not apply because the proposed changes to the FAR do not impose information collection requirements that require the approval of the Office of Management and Budget under 44 U.S.C. 3501, *et seq.*

List of Subjects in 48 CFR Parts 32 and 52

Government procurement.

Dated: December 7, 2006.

Ralph De Stefano

Director, Contract Policy Division.

Therefore, DoD, GSA, and NASA propose amending 48 CFR parts 32 and 52 as set forth below:

1. The authority citation for 48 CFR parts 32 and 52 continues to read as follows:

Authority: 40 U.S.C. 121(c); 10 U.S.C. chapter 137; and 42 U.S.C. 2473(c).

PART 32—CONTRACT FINANCING

32.110 [Amended]

2. Amend section 32.110 by removing from paragraph (d) ''32.1004(d)'' and adding ''32.1004(e)'' in its place.

3. Revise section 32.1000 to read as follows:

32.1000 Scope of subpart.

This subpart provides policy and procedures for performance-based payments under noncommercial purchases pursuant to Subpart 32.1.

4. Amend section 32.1001 by—

a. Removing from paragraph (c) ''32.1003(c)'' and adding ''32.1003(d))'' in its place;

b. Removing paragraph (d); redesignating paragraph (e) as (d); and adding a new paragraph (e); and

c. Revising newly designated paragraph (d).

The revised and added text reads as follows:

32.1001 Policy.

* * * * *

(d) Performance-based payments are contract financing payments and, therefore, are not subject to the interest-penalty provisions of prompt payment (see Subpart 32.9). These payments shall be made in accordance with agency policy.

(e) Performance-based payments shall not be used for—

(1) Payments under cost-reimbursement line items;

(2) Contracts for architect-engineer services or construction, or for shipbuilding or ship conversion, alteration, or repair, when the contracts provide for progress payments based upon a percentage or stage of completion; or

(3) Contracts awarded through sealed bid procedures.

32.1002 [Amended]

5. Amend section 32.1002 by—

a. Removing from the end of paragraph (a) the semi-colon and adding a period in its place; and

b. Removing from the end of paragraph (b) ''; or'' and adding a period in its place.

6. Revise section 32.1003 to read as follows:

32.1003 Criteria for use.

The contracting officer may use performance-based payments for individual orders and contracts provided—

(a) The contracting officer and offeror agree on the performance-based payment terms;

(b) The contract, individual order, or line item is a fixed-price type;

(c) For indefinite delivery contracts, the individual order does not provide for progress payments; and

(d) For other than an indefinite delivery contract, the contract does not provide for progress payments.

7. Amend section 32.1004 by—

a. Revising the 3rd sentence of paragraph (a)(1);

b. Revising paragraph (a)(2)(iii);

c. Revising the introductory text of paragraph (b)(2);

d. Adding a new sentence to the end of paragraph (b)(2)(ii);

e. Redesignating paragraphs (c), (d), and (e) as (d), (e), and (f) respectively, and adding a new paragraph (c);

f. Revising the 2nd sentence of the newly redesignated paragraph (f)(1)(ii); and

g. Removing from the newly redesignated paragraph (f)(2)(ii) ''(e)(1)(ii)'' and adding ''(f)(1)(ii)'' in its place.

The revised and added text reads as follows:

32.1004 Procedures.

* * * * *

(a) * * * (1) * * * The signing of contracts or modifications, the exercise of options, the passage of time, or other such occurrences do not represent meaningful efforts or actions and shall not be identified as events or criteria for performance-based payments. * * *

* * * * *

(2) * * *

(iii) The contract must specifically identify cumulative events or criteria and identify which events or criteria are preconditions for the successful achievement of each cumulative event or criterion.

* * * * *

(b) * * *

(2) Total performance-based payments shall—

* * * * *

(ii) * * * Unless otherwise provided in agency procedures, the contracting officer shall document the rationale for establishing the performance-based payment rate if the performance-based payment rate is less than the contractor's applicable progress payment rate.

* * * * *

(c) *Payment Amount.* The contracting officer shall not limit the amount of a performance-based payment to a percentage of actual incurred cost for the scheduled event or performance criteria.

* * * * *

(f) * * *

(1) * * *

(ii) * * * Unless agencies prescribe other evaluation procedures, if the contracting officer anticipates that the cost of providing performance-based payments would have a significant impact on determining the best value offer, the solicitation should state that the evaluation of the offeror's proposed prices will include an adjustment to reflect the estimated cost to the Government of providing each offeror's proposed performance-based payments (see Alternate I to the provision at 52.232–28).

* * * * *

8. Amend section 32.1005 by—

a. Revising the introductory text of paragraph (a); and

b. Removing from paragraph (b)(2) ''32.1004(e)'' and adding ''32.1004(f)'' in its place.

The revised text reads as follows:

32.1005 Solicitation provision and contract clause.

(a) Insert the clause at 52.232–32, Performance-Based Payments, in—

* * * * *

9. Amend section 32.1007 by—

a. Revising paragraph (a);

b. Removing from paragraph (b)(2) ''32.1004(c)'' and adding ''32.1004(d)'' in its place; and

c. Adding to the end of paragraph (c) a new sentence.

The revised and added text reads as follows:

32.1007 Administration and payment of performance-based payments.

(a) *Responsibility.* The contracting officer responsible for administering performance-based payments (see 42.302(a)(12)) for the contract shall review and approve all performance-based payments for that contract.

* * * * *

(c) * * * Reviews shall not include verification of actual cost unless the purpose is to assist in establishing revised or new performance-based payment milestones or values.

* * * * *

PART 52—SOLICITATION PROVISIONS AND CONTRACT CLAUSES

10. Amend section 52.232–32 by revising the date of the clause and the second sentence of paragraph (c)(2) to read as follows:

52.232–32 Performance-Based Payments.

* * * * *

PERFORMANCE-BASED PAYMENTS (DATE)

* * * * *

(c) * * *

(2) * * * The designated payment office will pay approved requests on the _____ [*Contracting Officer insert day as prescribed by agency head; if not prescribed, insert ''30th''*] day after receipt of the request for performance-based payment by the designated payment office. * * *

* * * * *

(End of clause)

[FR Doc. 06–9678 Filed 12–13–06; 8:45 am]

BILLING CODE 6820–EP–S

DEPARTMENT OF THE INTERIOR

Fish and Wildlife Service

50 CFR Part 10

RIN 1018–AB72

General Provisions; Revised List of Migratory Birds

AGENCY: Fish and Wildlife Service, Interior.

ACTION: Proposed rule; reopening of comment period.

SUMMARY: We, the Fish and Wildlife Service, are reopening the comment period for our proposed rule to revise the list of migratory birds protected by the Migratory Bird Treaty Act (MBTA) to allow interested persons additional time to prepare and submit comments.

DATES: We will consider all comments that we receive on or before December 29, 2006.

ADDRESSES: Submit your comments on this proposal in one of the following ways:

1. By postal mail to Chief, Division of Migratory Bird Management, U.S. Fish and Wildlife Service, 4401 North Fairfax Drive, Mail Stop 4107, Arlington, VA 22203;

2. By hand-delivery to U.S. Fish and Wildlife Service, Division of Migratory Bird Management, 4501 North Fairfax Drive, Room 4000, Arlington, VA 22203. By prior arrangement, materials available for public inspection can also be examined at this location;

3. By fax to (703) 358–2272; or

4. By e-mail to *mbtabirdlist@fws.gov;* or

5. By the Federal eRulemaking Portal at *http://www.regulations.gov.*

FOR FURTHER INFORMATION CONTACT: John L. Trapp, (703) 358–1714.

SUPPLEMENTARY INFORMATION: On August 24, 2006, we published in the **Federal Register** (71 FR 50194–50221) a proposed rule to revise the List of Migratory Birds by adding numerous species and removing numerous species. The proposed rule is available for online viewing or downloading at *http://www.fws.gov/migratorybirds/.*

Our reasons for proposing changes to the list include correcting previous

mistakes, including misspellings; adding species based on new evidence of occurrence in the United States or U.S. territories; removing species no longer known to occur within the United States; and changing names based on new taxonomy. The net increase of 140 species (152 added and 12 removed) would bring to 972 the total number of species protected by the MBTA (16 U.S.C. 703–711).

We regulate most aspects of the taking, possession, transportation, sale, purchase, barter, exportation, and importation of migratory birds. An accurate and up-to-date list of species protected by the MBTA is essential for regulatory purposes.

The comment period for the proposed rule ended October 23, 2006. We are reopening the comment period for an additional 15 days (see **DATES**) to allow interested persons additional time to prepare and submit comments. We will also consider all comments received between October 24, 2006 (the day after the close of the original comment period) and the date of this notice.

Dated: December 5, 2006.

David M. Verhey,

Acting Assistant Secretary for Fish and Wildlife and Parks.

[FR Doc. E6–21313 Filed 12–13–06; 8:45 am]

BILLING CODE 4310–55–P

DEPARTMENT OF THE INTERIOR

Fish and Wildlife Service

50 CFR Part 17

RIN 1018–AU83

Endangered and Threatened Wildlife and Plants; Designation of Critical Habitat for the Monterey Spineflower (Chorizanthe pungens var. pungens)

AGENCY: Fish and Wildlife Service, Interior.

ACTION: Proposed rule.

SUMMARY: In response to a settlement agreement, we, the U.S. Fish and Wildlife Service (Service), propose to revise currently designated critical habitat for the Monterey spineflower (*Chorizanthe pungens* var. *pungens*) pursuant to the Endangered Species Act of 1973, as amended (Act). In total, approximately 11,032 acres (ac) (4,466 hectares (ha)) fall within the boundaries of the proposed revision to the critical habitat designation. The proposed revision to critical habitat is located in Santa Cruz and Monterey Counties, California.

DATES: We will accept comments from all interested parties until February 12, 2007. We must receive requests for public hearings, in writing, at the address shown in the **ADDRESSES** section by January 29, 2007.

ADDRESSES: If you wish to comment, you may submit your comments and materials concerning this proposal by any one of several methods:

1. You may mail or hand-deliver written comments and information to Diane Noda, Field Supervisor, U.S. Fish and Wildlife Service, Ventura Fish and Wildlife Office (VFWO), 2493 Portola Road, Suite B, Ventura, California 93003.

2. You may send comments by electronic mail (e-mail) to *fw8mosp@fws.gov*. Please see the Public Comments Solicited section below for file format and other information about electronic filing.

3. You may fax your comments to 805/644–3958.

4. You may go to the Federal eRulemaking Portal: *http://www.regulations.gov*. Follow the instructions for submitting comments.

Comments and materials received, as well as supporting documentation used in the preparation of this proposed rule, will be available for public inspection, by appointment, during normal business hours at the VFWO 2493 Portola Road, Suite B, Ventura, California 93003 (telephone 805/644–1766).

FOR FURTHER INFORMATION CONTACT: Diane Noda, Field Supervisor, VFWO, 2493 Portola Road, Suite B, Ventura, California 93003, (telephone 805/644–1766, ext. 319; facsimile 805/644–3958). Persons who use a telecommunications device for the deaf (TDD) may call the Federal Information Relay Service (FIRS) at 800–877–8339, 7 days a week and 24 hours a day.

SUPPLEMENTARY INFORMATION:

Public Comments Solicited

We intend that any final action resulting from this proposal will be as accurate and as effective as possible. Therefore, comments or suggestions from the public, other concerned governmental agencies, the scientific community, industry, or any other interested party concerning this proposed rule are hereby solicited. Comments particularly are sought concerning:

(1) The reasons any habitat should or should not be determined to be critical habitat as provided by section 4 of the Act, including whether the benefit of designation will outweigh any threats to the species due to designation;

(2) Specific information on the amount and distribution of *Chorizanthe pungens* var. *pungens* habitat, and what areas should be included in the designations that were occupied at the time of listing that contain the features that are essential for the conservation of the species and why, and what areas that were not occupied at the time of listing are essential to the conservation of the species and why;

(3) Land use designations and current or planned activities in the subject areas and their possible impacts on proposed critical habitat;

(4) Any foreseeable economic, national security, or other potential impacts resulting from the proposed designation and, in particular, any impacts on small entities;

(5) Whether our approach to designating critical habitat could be improved or modified in any way to provide for greater public participation and understanding, or to assist us in accommodating public concerns and comments;

(6) This proposed designation's revised criteria for determining essential features and critical habitat boundaries; and

(7) The existence of any conservation or management plans being implemented by California State Parks, Bureau of Land Management (BLM) on former Fort Ord, or other public or private land management agencies or owners that we should consider for exclusion from the designation pursuant to section 4(b)(2) of the Act. Please include information on any benefits (educational, regulatory, etc.) of including or excluding lands from this proposed revised designation.

If you wish to comment, you may submit your comments and materials concerning this proposal by any one of several methods (see **ADDRESSES** section). Please submit Internet comments to *fw8mosp@fws.gov* in ASCII file format and avoid the use of special characters or any form of encryption. Please also include ''Attn: *Chorizanthe pungens* var. *pungens*'' in your e-mail subject header and your name and return address in the body of your message. If you do not receive a confirmation from the system that we have received your Internet message, contact us directly by calling our VFWO at phone number 805/644–1766, ext. 333. Please note that the Internet address, *fw8mosp@fws.gov*, will be closed out at the termination of the public comment period.

Our practice is to make comments, including names and home addresses of respondents, available for public review during regular business hours. Individual respondents may request that we withhold their names and home

addresses, etc., but if you wish us to consider withholding this information, you must state this prominently at the beginning of your comments. In addition, you must present rationale for withholding this information. This rationale must demonstrate that disclosure would constitute a clearly unwarranted invasion of privacy. Unsupported assertions will not meet this burden. In the absence of exceptional, documentable circumstances, this information will be released. We will always make submissions from organizations or businesses, and from individuals identifying themselves as representatives of or officials of organizations or businesses, available for public inspection in their entirety.

Role of Critical Habitat in Actual Practice of Administering and Implementing the Act

Attention to and protection of habitat is paramount to successful conservation actions. The role that designation of critical habitat plays in protecting habitat of listed species, however, is often misunderstood. As discussed in more detail below in the discussion of exclusions under section 4(b)(2) of the Act, there are significant limitations on the regulatory effect of designation under section 7(a)(2) of the Act. In brief, (1) designation provides additional protection to habitat only where there is a Federal nexus; (2) the protection is relevant only when, in the absence of designation, destruction or adverse modification of the critical habitat would in fact take place (in other words, other statutory or regulatory protections, policies, or other factors relevant to agency decision-making would not prevent the destruction or adverse modification); and (3) designation of critical habitat triggers the prohibition of destruction or adverse modification of that habitat, but it does not require specific actions to restore or improve habitat.

Currently, only 476 species, or 36 percent of the 1,311 listed species in the U.S. under the jurisdiction of the Service, have designated critical habitat. We address the habitat needs of all 1,311 listed species through conservation mechanisms such as listing, section 7 consultations, the Section 4 recovery planning process, the Section 9 protective prohibitions of unauthorized take, Section 6 funding to the States, the Section 10 incidental take permit process, and cooperative, nonregulatory efforts with private landowners. The Service believes that it is these measures that may make the difference between extinction and survival for many species.

In considering exclusions of areas proposed for designation, we evaluated the benefits of designation in light of *Gifford Pinchot Task Force* v. *U.S. Fish and Wildlife Service*, 378 F.3d 1059 (9th Cir 2004) (hereinafter *Gifford Pinchot*). In that case, the Ninth Circuit invalidated the Service's regulation defining ''destruction or adverse modification of critical habitat.'' In response, on December 9, 2004, the Director issued guidance to be considered in making section 7 adverse modification determinations. This proposed critical habitat designation does not use the invalidated regulation in our consideration of the benefits of including areas. The Service will carefully manage future consultations that analyze impacts to designated critical habitat, particularly those that appear to be resulting in an adverse modification determination. Such consultations will be reviewed by the Regional Office prior to finalizing to ensure that an adequate analysis has been conducted that is informed by the Director's guidance.

On the other hand, to the extent that designation of critical habitat provides protection, that protection can come at significant social and economic cost. In addition, the mere administrative process of designation of critical habitat is expensive, time-consuming, and controversial. The current statutory framework of critical habitat, combined with past judicial interpretations of the statute, make critical habitat the subject of excessive litigation. As a result, critical habitat designations are driven by litigation and courts rather than biology, and made at a time and under a time frame that limits our ability to obtain and evaluate the scientific and other information required to make the designation most meaningful.

In light of these circumstances, the Service believes that additional agency discretion would allow our focus to return to those actions that provide the greatest benefit to the species most in need of protection.

Procedural and Resource Difficulties in Designating Critical Habitat

We have been inundated with lawsuits for our failure to designate critical habitat, and we face a growing number of lawsuits challenging critical habitat determinations once they are made. These lawsuits have subjected the Service to an ever-increasing series of court orders and court-approved settlement agreements, compliance with which now consumes nearly the entire listing program budget. This leaves the Service with little ability to prioritize its activities to direct scarce listing resources to the listing program actions with the most biologically urgent species conservation needs.

The consequence of the critical habitat litigation activity is that limited listing funds are used to defend active lawsuits, to respond to Notices of Intent (NOIs) to sue relative to critical habitat, and to comply with the growing number of adverse court orders. As a result, listing petition responses, the Service's own proposals to list critically imperiled species, and final listing determinations on existing proposals are all significantly delayed.

The accelerated schedules of court-ordered designations have left the Service with limited ability to provide for public participation or to ensure a defect-free rulemaking process before making decisions on listing and critical habitat proposals, due to the risks associated with noncompliance with judicially imposed deadlines. This in turn fosters a second round of litigation in which those who fear adverse impacts from critical habitat designations challenge those designations. The cycle of litigation appears endless, and is very expensive, thus diverting resources from conservation actions that may provide relatively more benefit to imperiled species.

The costs resulting from the designation include legal costs, the cost of preparation and publication of the designation, the analysis of the economic effects and the cost of requesting and responding to public comment, and in some cases the costs of compliance with the National Environmental Policy Act (NEPA; 42 U.S.C. 4371 et seq.). These costs, which are not required for many other conservation actions, directly reduce the funds available for direct and tangible conservation actions.

Background

It is our intent to discuss only those topics directly relevant to the designation of critical habitat in this proposed revision to the critical habitat designation. Detailed background information covering the appearance, seed ecology, habitat requirements, and the historical and current distribution for *Chorizanthe pungens* var. *pungens* was published in the final designation of critical habitat for *Chorizanthe pungens* var. *pungens* on May 29, 2002 (67 FR 37498). Additional information on *C. p.* var. *pungens* is also available in the final listing rule published in the **Federal Register** on February 4, 1994 (59 FR 5499).

Chorizanthe pungens var. *pungens* (Monterey spineflower) is endemic to sandy soils in active dune systems, and bluffs featuring deposited windblown sands, in coastal areas in southern Santa Cruz and northern Monterey Counties (Reveal and Hardham 1989, pp. 124–125; Ertter 1990, p. 5). These areas feature open spaces between dominant vegetative elements that are dynamic and generally maintained through time via wind, fire, or other types of disturbance. Populations are also found in grassland, scrub, chaparral, and woodland habitats, featuring sandy soils and openings that are free of other vegetation. The furthest inland population is found in the Salinas Valley in interior Monterey County.

Chorizanthe pungens var. *pungens* is one of two varieties of the species *C. pungens.* The other variety, *C. p.* var. *hartwegiana* (Ben Lomond spineflower) is restricted to the Santa Cruz Mountains, generally between Scotts Valley and Ben Lomond. The ranges of these two varieties of *C. pungens* do not overlap. The range of *C. p.* var. *pungens* partially overlaps with another closely related taxon, *Chorizanthe robusta* var. *robusta* (robust spineflower), in southern Santa Cruz County. *Chorizanthe pungens* var. *hartwegiana* and *C. r.* var. *robusta* are both listed as federally-endangered species (59 FR 5499). A detailed description of these related taxa is available in the Recovery Plan for Seven Coastal Plants and the Myrtle's Silverspot Butterfly (Service 1998), the Recovery Plan for Insect and Plant Taxa in the Santa Cruz Mountains in California (Service 1998), the Recovery Plan for the Robust Spineflower (Service 2004), and scientific literature cited within these plans. A recent study on the genetic relationships between various spineflower taxa in the central coast region of California noted genetic variability between populations of *Chorizanthe pungens* var. *pungens* located at four sites between Sunset State Beach and Marina State Beach (Brinegar 2006, pp. 6–10).

Chorizanthe pungens var. *pungens* is an annual species that produces one seed per flower, and depending on the vigor of an individual plant, dozens to over one hundred seeds can be produced (Abrams 1944, F35–1; Fox et al. 2006, pp. 162–163). Seed dispersal in *C. p.* var. *pungens* is likely facilitated by hooked spines on the structure surrounding the seed. In the *Chorizanthe* genus, these are believed to attach to passing animals and disperse seed between plant colonies and populations (Reveal 2001, unpaginated). Wind also disperses seed within colonies and populations.

New information concerning the seed bank of *Chorizanthe pungens* var. *pungens* was published in 2006 (Fox et al. 2006, pp. 157–170). This 5-year study found that the density of *C. p.* var *pungens* was directly related to the previous year's seed set and, based on these observations, suggests that *C. p.* var. *pungens* apparently germinates well under most winter conditions and does not develop an extensive persistent soil seed bank. Consequently, this new information suggests that protection of existing plants in any year is important to the long-term conservation of *C. p.* var. *pungens* because the species persistence relies primarily on the previous year's seed set as opposed to a large dormant seed bank that remains viable for decades. If this hypothesis is correct, loss of above-ground individuals prior to seed set could ultimately have more of an impact on populations than was previously thought. However, there exist anecdotal reports of *C. p.* var. *pungens* reappearing in several areas after habitat restoration efforts removed dense cover of iceplant. This tends to support the idea that, under some conditions, at least, a soil seed bank that persists for several years may be present and substantial enough to repopulate a site.

A pollination ecology study was conducted on the related *Chorizanthe robusta* var. *robusta* in Santa Cruz County that compared the pollination ecology of coastal and inland populations (Murphy 2003b, pp. 1–78). The study found that, although this species may self-pollinate, pollinator access to flowers increased seed set significantly, indicating that pollinators increase plant reproductive success. This same study noted a high diversity of pollinators and correlated that diversity, in part, to variation in microhabitat conditions, including exposure; proximity to the coast; and structure, composition, and density of the surrounding vegetation (Murphy 2003b, pp. 28–63). Results suggest that protecting pollinator habitat and diversity is likely to be important to the survival of this taxon. These results can be inferred to *C. p.* var. *pungens* as these two taxa occur in proximity to each other at several locations (Sunset and Manresa State Beaches), occupy similar habitats and plant communities, and are similar genetically (Brinegar 2006, p. 13) and phenotypically (the outward appearance of the plant).

The historical range of *Chorizanthe pungens* var. *pungens* was more extensive than what it is now known to occupy. Collections from the late 1800s and the first half of the 1900s indicate that the species occurred along the coast as far south as the San Simeon area in San Luis Obispo County (Consortium of California Herbaria 2006). In Monterey County, numerous collections were made from the Salinas Valley. However, this area has been largely converted to agriculture and habitat no longer remains; the last collection was made in 1920 (Consortium of California Herbaria 2006). This taxon currently occupies the entire range identified in the final listing rule (59 FR 5499).

Current information concerning the presence of populations throughout its range is summarized here. Current information about populations on former Fort Ord, is from surveys conducted between 1992 and 2004, and provides more detail than the information available at the time of listing (e.g., BLM 2006). Former Fort Ord is a closed military installation which is in the process of being remediated and transferred for reuse. Reuse will include residential, recreational, and commercial development, as well as conservation of lands in habitat reserves. A response to our request for information (Service 2006) from the California Department of Parks and Recreation (CDPR) (CDPR 2006a) confirms that populations at Manresa and Sunset State Beaches are stable and that the Sunset State Beach population is expanding due to habitat restoration activities (primarily removal of nonnative European beachgrass (*Ammophila arenaria*)). Occurrence records for the eastern Prunedale unit were provided by the California Department of Transportation (Caltrans) from surveys conducted for the Highway 101 re-route study in 2001 (Caltrans 2001). A small population which was thought to be extirpated at the former U.S. Coast Guard's Light Station, Point Pinos property, very close to the northern boundary of the Asilomar unit, was rediscovered during recent surveys (Kephart 2004, p. 1). Also, recent surveys at the Monterey Peninsula Airport (Environmental Science Associates 2004, pp. 3.12–3.13) and leased properties surrounding the Monterey Peninsula Airport provide information about populations in the Del Rey Oaks area. Records that have been prepared, but not yet submitted, for entry into the CNDDB database were reviewed for some areas, including the Armstrong Ranch, Prunedale, Elkhorn Slough, and Aromas. Service staff also conducted site visits at various locations between 2001 and the present.

Previous Federal Actions

For more information on previous Federal actions concerning *Chorizanthe pungens* var. *pungens,* refer to the final listing rule published in the **Federal Register** on February 4, 1994 (59 FR 5499), and the designation of critical habitat for *C. p.* var. *pungens* published in the **Federal Register** on May 29, 2002 (67 FR 37498). In September 1998, we published a recovery plan for seven coastal plants and the Myrtle's silverspot butterfly which included *C. p.* var. *pungens.* On May 29, 2002, we designated critical habitat for approximately 18,829 acres (ac) (7,620 hectares (ha)) of land in Santa Cruz and Monterey Counties, California. In March 2005, the Homebuilders Association of Northern California, et al., filed suit against the Service (CV–013630LKK–JFM) challenging final critical habitat rules for several species, including *Chorizanthe pungens* var. *pungens.* In March 2006, a settlement was reached that requires the Service to re-evaluate five final critical habitat designations, including critical habitat designated for *C. p.* var. *pungens.* The settlement stipulated that any proposed revisions to the *C. p.* var. *pungens* designation would be submitted to the **Federal Register** for publication on or before December 7, 2006.

Critical Habitat

Critical habitat is defined in section 3 of the Act as—(i) the specific areas within the geographical area occupied by a species, at the time it is listed in accordance with the Act, on which are found those physical or biological features (I) essential to the conservation of the species and (II) that may require special management considerations or protection; and (ii) specific areas outside the geographical area occupied by a species at the time it is listed, upon a determination that such areas are essential for the conservation of the species. Conservation, as defined under section 3 of the Act means to use and the use of all methods and procedures which are necessary to bring any endangered species or threatened species to the point at which the measures provided under the Act are no longer necessary. Such methods and procedures include, but are not limited to, all activities associated with scientific resources management such as research, census, law enforcement, habitat acquisition and maintenance, propagation, live trapping, and transplantation, and, in the extraordinary case where population pressures within a given ecosystem cannot be otherwise relieved, may include regulated taking.

Critical habitat receives protection under section 7 of the Act through the prohibition against destruction or adverse modification of critical habitat with regard to actions carried out, funded, or authorized by a Federal agency. Section 7 requires consultation on Federal actions that are likely to result in the destruction or adverse modification of critical habitat. The designation of critical habitat does not affect land ownership or establish a refuge, wilderness, reserve, preserve, or other conservation area. Such designation does not allow government or public access to private lands. Section 7 is a purely protective measure and does not require implementation of restoration, recovery, or enhancement measures.

To be included in a critical habitat designation, the habitat within the area occupied by the species must first have features that are essential to the conservation of the species. Critical habitat designations identify, to the extent known using the best scientific data available, habitat areas that provide essential life cycle needs of the species (i.e., areas on which are found the primary constituent elements, as defined at 50 CFR 424.12(b)).

Habitat occupied at the time of listing may be included in critical habitat only if the essential features thereon may require special management or protection. Thus, we do not include areas where existing management is sufficient to conserve the species. (As discussed below, such areas may also be excluded from critical habitat under section 4(b)(2).) Accordingly, when the best available scientific data do not demonstrate that the conservation needs of the species require additional areas, we will not designate critical habitat in areas outside the geographical area occupied by the species at the time of listing. An area currently occupied by the species but was not known to be occupied at the time of listing will likely, but not always, be essential to the conservation of the species and, therefore, typically included in the critical habitat designation.

The Service's Policy on Information Standards Under the Endangered Species Act, published in the **Federal Register** on July 1, 1994 (59 FR 34271), and Section 515 of the Treasury and General Government Appropriations Act for Fiscal Year 2001 (P.L. 106–554; H.R. 5658) and the associated Information Quality Guidelines issued by the Service, provide criteria, establish procedures, and provide guidance to ensure that decisions made by the Service represent the best scientific data available. They require Service biologists to the extent consistent with the Act and with the use of the best scientific data available, to use primary and original sources of information as the basis for recommendations to designate critical habitat. When determining which areas are critical habitat, a primary source of information is generally the listing package for the species. Additional information sources include the recovery plan for the species, articles in peer-reviewed journals, conservation plans developed by States and counties, scientific status surveys and studies, biological assessments, or other unpublished materials and expert opinion or personal knowledge. All information is used in accordance with the provisions of Section 515 of the Treasury and General Government Appropriations Act for Fiscal Year 2001 (Pub. L. 106–554; H.R. 5658) and the associated Information Quality Guidelines issued by the Service.

Section 4 of the Act requires that we designate critical habitat and make revisions thereto on the basis of the best scientific data available. Habitat is often dynamic, and species may move from one area to another over time. Furthermore, we recognize that designation of critical habitat may not include all of the habitat areas that may eventually be determined to be necessary for the recovery of the species. For these reasons, critical habitat designations do not signal that habitat outside the designation is unimportant or may not be required for recovery.

Areas that support populations, but are outside the critical habitat designation, will continue to be subject to conservation actions implemented under section 7(a)(1) of the Act and to the regulatory protections afforded by the section 7(a)(2) jeopardy standard, as determined on the basis of the best available information at the time of the action. Federally funded or permitted projects affecting listed species outside their designated critical habitat areas may still result in jeopardy findings in some cases. Similarly, critical habitat designations made on the basis of the best available information at the time of designation will not control the direction and substance of future recovery plans, habitat conservation plans, or other species conservation planning efforts if new information available to these planning efforts calls for a different outcome.

Methods

As required by section 4(b)(2) of the Act, we used the best scientific data available in determining areas that contain the features that are essential to the conservation of *Chorizanthe pungens* var. *pungens.* This includes information from the final listing rule; data from research and survey observations published in peer-reviewed articles; reports and survey forms prepared for Federal, State, local agencies, and private corporations; site visits; regional Geographic Information System (GIS) layers, including soil and species coverages; and data submitted to the California Natural Diversity Database (CNDDB). We have also reviewed available information that pertains to the ecology, life history, and habitat requirements of this species. This material included information and data in peer-reviewed articles; reports of monitoring and habitat characterizations; reports submitted during section 7 consultations; our recovery plan for the species; and information received from local species experts. We are not proposing to designate as critical habitat any areas not occupied at the time of listing and presently occupied by the species.

At the time of the final listing in 1994, it was thought that approximately 70 percent of the range of *Chorizanthe pungens* var. *pungens* occurred on Fort Ord; *C. p.* var. *pungens* was reported from approximately two-thirds of the installation at varying densities (U.S. Army Corps of Engineers (ACOE) 1992, Figure F–3). Fort Ord was considered the most important inland occurrence of *C. p.* var. *pungens* because of the extent of habitat the species occupied at this location. Further refined mapping of occurrences in the Prunedale area, north of Fort Ord, and extensions of inland occurrences (that were reported at the time of the final listing) have been identified over the last few years. This more complete information on the relative distribution of the species within its known range has led us to conclude that preserving the population on Fort Ord, as well as several inland sites is important to the long-term conservation of the species.

Primary Constituent Elements

In accordance with section 3(5)(A)(i) of the Act and regulations at 50 CFR 424.12, in determining which areas to propose as critical habitat, we consider those physical and biological features (PCEs) that are essential to the conservation of the species, and within areas occupied by the species at the time of listing, that may require special management considerations or protection. These include, but are not limited to space for individual and population growth and for normal behavior; food, water, air, light, minerals, or other nutritional or physiological requirements; cover or shelter; sites for breeding, reproduction, and rearing (or development) of offspring; and habitats that are protected from disturbance or are representative of the historic geographical and ecological distributions of a species.

The specific primary constituent element required for *Chorizanthe pungens* var. *pungens* is derived from the biological needs of *C. p.* var. *pungens* as described in the Background section of this proposal and referenced in the previous designation for critical habitat published in the **Federal Register**.

Space for Individual and Population Growth, Including Sites for Seed Dispersal and Germination; and for the Seed Bank

Chorizanthe pungens var. *pungens* readily grows where suitable sandy substrates occur and, like other Chorizanthe species, where competition with other plant species is minimal (Harding Lawson Associates 2000, p. 1; Reveal 2001, unpaginated). Where *C. p.* var. *pungens* occurs within native plant communities, along the coast as well as at more interior sites, it occupies microhabitat sites found between shrub stands where there is little cover from other herbaceous species. Where *C. p.* var. *pungens* occurs within grassland communities, the density of *C. p.* var. *pungens* may decrease with an increase in the density of other herbaceous species. Conserved areas should be of sufficient size to maintain the native plant communities that support *C. p.* var. *pungens* which include coastal dune, coastal scrub, grassland, maritime chaparral, oak woodland, and interior floodplain dune communities and have a structure with openings between the dominant elements (Service 1998, p. 20).

These openings within the vegetation community should be free of nonnative invasive plant species. Not only do invasive, non-native plants physically exclude *C. p.* var. *pungens* seedlings, but many of the hymenopteran (members of the insect order that includes bees, wasps, and ants) pollinators important to *Chorizanthe* pollination (e.g., sphecid wasps, bumblebees, and bees from the families, Halictidae and Anthophoridae), require bare ground for nesting (Murphy 2003a, p 4). Removal of invasive non-native species may help to maintain existing rates of pollinator visitation. Although areas with little or no cover of non-native invasive species may be optimal for the conservation of *C. p.* var. *pungens*, seeds that subsequently germinate may still be present beneath the canopy of the non-native invasive plants.

Conservation of *Chorizanthe pungens* var. *pungens* depends not only on adequate space for growth, but also on maintaining the dynamic nature of *C. p.* var. *pungens* habitat, which ensures the availability of microsites appropriate for germination and growth. Coastal dune communities are subject to natural dynamic processes that create suitable openings in scrub and chaparral communities (Cooper 1967, pp. 63–72; Barbour and Johnson 1988, p. 242). Shifts in habitat composition caused by patterns of dune mobilization that create openings suitable for *C. p.* var. *pungens* are followed by stabilization and successional trends in coastal dune scrub that result in increased vegetation cover over time (Barbour and Johnson 1988, p. 242). Accordingly, over time there are shifts in the distribution and size of individual colonies of *C. p.* var. *pungens* found in the gaps between shrub vegetation.

Human-caused disturbances, such as scraping of roads and firebreaks, can reduce the competition from other herbaceous species and consequently provide favorable conditions for *Chorizanthe pungens* var. *pungens*. This has been observed at former Fort Ord where *C. p.* var. *pungens* occurs along the margins of dirt roads (ACOE 1992, p. 39; U.S. BLM 2003, pp. 15–22). However, such activities can also promote the spread and establishment of non-native species, can bury the seedbank of *C. p.* var. *pungens*, and do not result in the cycling of nutrients and soil microbial changes that are associated with large-scale natural disturbances, such as fires (Stylinski and Allen 1999, pp. 544–554; Keeley and Keeley 1989, pp. 67–70). This type of management may not sustain populations over the long term and would likely result in a general degradation of habitat for *C. p.* var. *pungens* if conducted over large areas.

Conservation of *Chorizanthe pungens* var. *pungens* depends on adequate space to promote pollinator activity and decrease the edge effects associated with urban development. Larger areas with a high volume-to-edge ratio are less likely to be affected by the range of human activities that would alter adjacent *C. p.* var. *pungens* habitat. Potential edge effects identified for other Chorizanthe species that may also affect *C. p.* var. *pungens* include the introduction of

non-native plants (*e.g.*, landscaping plants), roadside mowing for fuel reduction, informal recreation, trash and landscape waste dumping, hydrologic changes from landscape watering or increased paved surfaces, and pesticide drift (Conservation Biology Institue 2000, pp. 6–17). Large occurrences of *C. p.* var. *pungens* are more likely to attract insect pollinators necessary for the production of viable seed and promote gene flow, to withstand periodic extreme environmental stresses (e.g., drought, disease), and may act as important ''source'' populations to allow recolonization of surrounding areas following periodic extreme environmental stresses (Schemske et al., pp. 584–588). Small patches of plants have been documented to suffer reproductive failure due to lack of effective pollination when critical thresholds of isolation were exceeded. In contrast, sufficiently large patches attracted pollinators regardless of their degree of isolation (Groom 1998, p. 487). However, small populations of plants may serve other functions that support the long-term persistence of the species. They may serve as corridors for gene flow between larger populations, and may harbor greater levels of genetic diversity than predicted for their size (Lesica and Allendorf 1991, pp. 172–175).

Chorizanthe pungens var. *pungens* appears to function as an opportunistic annual plant, most of its seeds germinating under variable winter conditions, rather than persisting to create an extensive, long-lasting soil seed bank (Fox et al. 2006, p. 168). This highlights the importance of protecting above-ground plants from germination through seed set each year (approximately December through the following September), as it appears the persistence of *C. p.* var. *pungens* relies on successful seed set from the previous year in addition to adequate climatic conditions. This has implications for the amount of successive disturbance that *C. p.* var. *pungens* can endure and still persist. Management activities that are used for non-native invasive species removal, such as mowing prior to seed development, are unlikely to be compatible with the long-term persistence of *C. p.* var. *pungens.*

Areas That Provide the Basic Requirements for Growth (Such as Water, Light, and Minerals)

Chorizanthe pungens var. *pungens* occurs on sandy soils with a variable origin, including active dunes, interior fossil dunes, and floodplain alluvium (Service 1998, pp 1–13, 20). The most prevalent soil series represented are coastal beaches, dune sand, Baywood sand, Oceano loamy sand, Arnold loamy sand, Santa Ynez fine sandy loam, Arnold-Santa Ynez complex, Metz loamy sand, and Metz complex (Soil Conservation Service 1978, pp 13–73, 1980, pp. 9–81). Sites where *C. p.* var. *pungens* occurs are generally bare, sandy patches free of other vegetation (Zoger and Pavlik 1987, unpaginated). On the coast, it occurs in coastal dune scrub and chaparral communities (Service 1998, pp 19–20; CNDDB 2006). *Chorizanthe pungens* var. *pungens* does not occur under dense stands of vegetation, but will occur between more widely-spaced shrubs or gaps in the shrub vegetation. At more inland sites, *C. p.* var. *pungens* occurs on sandy, well-drained soils in a variety of habitat types, most frequently maritime chaparral, valley oak woodlands, and grasslands (CNDDB 2006). In grassland and oak woodland communities, abundant annual grasses may outcompete *C. p.* var. *pungens,* but in places where grass species are controlled through grazing, mowing, or fire activities that are appropriate in timing and intensity, *C. p.* var. *pungens* may persist (e.g. Zander Associates 2003, pp. B.22–B.24; Morgan 2006). Additional specific information about the native plant communities associated with *C. p.* var. *pungens* can be found in the listing rule notice (59 FR 5499) and the final critical habitat designation (67 FR 37498).

Primary Constituent Elements for Chorizanthe pungens var. pungens

Pursuant to our regulations, we are required to identify the known physical and biological features (PCEs) essential to the conservation of *Chorizanthe pungens* var. *pungens.* All areas proposed as critical habitat for *C. p.* var. *pungens* were occupied at the time of listing and are presently occupied, within the species' historic geographic range, and contain the PCE to support at least one life history function.

Based on our current knowledge of the life history, biology, and ecology of the species and the requirements of the habitat to sustain the essential life history functions of the species, we have determined that the PCE for *Chorizanthe pungens* var. *pungens* is:

1. A vegetation structure arranged in a mosaic with openings between the dominant elements (e.g., scrub, shrub, oak trees, clumps of herbaceous vegetation) providing for sunlight on the following sandy soils: coastal beaches, dune land, Baywood sand, Ben Lomond sandy loam, Elder sandy loam, Oceano loamy sand, Arnold loamy sand, Santa Ynez fine sandy loam, Arnold-Santa Ynez complex, Metz complex, and Metz loamy sand.

This proposed revision to the critical habitat designation is designed for those areas containing the PCE necessary to support the life history functions that were the basis for the proposal. Each of the areas proposed in this rule have been determined to contain the PCE to provide for the life history functions of *Chorizanthe pungens* var. *pungens.* Units are proposed for designation based on the PCE being present to support one or more of the species' life history functions.

Criteria Used To Identify Critical Habitat

As required by section 4(b)(2) of the Act, we use the best scientific data available in determining areas that contain the features that are essential to the conservation of *Chorizanthe pungens* var. *pungens.* This includes information from the final listing rule; data from research and survey observations published in peer-reviewed articles; reports and survey forms prepared for Federal, State, and local agencies, and private corporations; site visits; regional Geographic Information System (GIS) layers, including soil and species coverages; and data submitted to the California Natural Diversity Database (CNDDB). We have also reviewed available information that pertains to the ecology, life history, and habitat requirements of this species. This material included information and data in peer-reviewed articles, reports of monitoring and habitat characterizations, reports submitted during section 7 consultations, scientific information cited in our recovery plan, and information received from local species experts. We are not proposing to designate any areas outside of the areas occupied by the species at the time of listing.

The long-term conservation of *Chorizanthe pungens* var. *pungens* is dependent upon the protection of existing population sites and the maintenance of ecologic functions, such as connectivity between populations within close geographic proximity to facilitate pollinator activity and seed dispersal.

We are proposing to designate critical habitat on lands occupied by the species at the time of listing and that, according to the best available information, continue to be occupied to date. All proposed units contain the features essential to the conservation of *Chorizanthe pungens* var. *pungens.* We are not proposing any units that are unoccupied.

Determining the specific areas that this taxon occupies is challenging for several reasons: (1) The distribution of *Chorizanthe pungens* var. *pungens* appears to be more closely tied to the presence of sandy soils and openings in the surrounding vegetation than to specific plant communities because plant communities may undergo changes over time, which, due to the degree of cover that is provided by that vegetation type, may either favor the presence of *C. p.* var. *pungens* or not; (2) the way the current distribution of *C. p.* var. *pungens* is mapped varies depending on the scale at which patches of individuals were recorded (e.g., many small patches versus one large patch); and (3) depending on the climate and other annual variations in habitat conditions, the extent of the distributions may either shrink and temporarily disappear, or enlarge and cover a more extensive area.

We used a multi-step process to identify and delineate proposed critical habitat units. First we mapped all CNDDB records of *Chorizanthe pungens* var. *pungens* known at the time of the final listing in a GIS format. These data consist of points and polygons depicting the results of field surveys. Additional records from recent surveys that have been reported to the CNDDB but have not yet been entered into their database were also mapped in GIS format. These surveys provided more detailed distribution information for *C. p.* var. *pungens* within and around known occurrences, but did not extend the known range of the taxon. We then selected sites from among this data set that contain the necessary features essential to the conservation of *C. p.* var. *pungens*, that may require special management considerations or protection, and would result in a designation that: (a) Represents the geographic range of the species, and captures peripheral populations; (b) encompasses large occurrences in large areas of contiguous native habitat, as these have the highest likelihood of persisting through the environmental extremes that characterize California's climate and of retaining the genetic variability to withstand future introduced stressors (e.g., new diseases, pathogens, or climate change); (c) includes the range of plant communities and soil types in which *C. p. pungens* is found; (d) maintains connectivity of occurrences; and (e) maintains the disturbance factors that create the openings in vegetation cover on which this taxon depends.

Species and plant communities that are protected across their ranges are expected to have lower likelihoods of extinction (Soule and Simberloff 1986; Scott et al 2001, p. 1297–1300); therefore, proposed critical habitat should include multiple locations across the entire range of the species to prevent range collapse. Protecting peripheral or isolated populations is highly desirable because they may contain genetic variation not found in core populations. The genetic variation results from the effects of population isolation and adaptation to locally distinct environments (Lesica and Allendorf 1995, pp. 754–757; Fraser 2000, pp. 49–51; Hamrick and Godt, pp. 291–295). We also sought to include the range of plant communities, soil types, and elevational gradients in which *Chorizanthe pungens* var. *pungens* is found to preserve the genetic variation that may result from adaptation to local environmental conditions, documented in other plant species (e.g. see Hamrick and Godt pp. 299–301; Millar and Libby 1991, pp. 150, 152–155). Finally, habitat fragmentation can result in loss of genetic variation (Young et al. 1996, pp. 413–417); therefore, we sought to maintain connectivity between patches or occurrences of plants.

In determining the extent of lands to propose as critical habitat, we identified all areas which contain those biological and physical features essential to the conservation of the species and are either already protected, managed, or otherwise unencumbered by conflicting use (e.g., undeveloped County or City parks, proposed preservation areas). Populations in these areas are most likely to persist into the future and to contribute to the species' survival and recovery. We added ownership categories to the proposed designation in the following manner: First we included undeveloped Federal and State lands, then local agency and private lands with recognized resource conservation emphasis (e.g., lands owned by a conservation-oriented non-profit organization, undeveloped County or City parks), and finally other agency and private lands.

Mapping

To map the proposed revised critical habitat units, we overlaid *Chorizanthe pungens* var. *pungens* records on soil series data and, where available, vegetation data (e.g., maritime chaparral mapped by Van Dyke and Holl (2003)) to determine appropriate polygons that would contain the necessary habitat features essential to the conservation of *C. p.* var. *pungens.* This taxon is closely tied to the presence of sandy soil types, and occurrences are generally scattered between vegetation gaps within appropriate soil types. Units were delineated by first mapping the occurrences and soil types and considering other geographic features such as developed areas and road boundaries.

When determining the proposed revisions to critical habitat boundaries within this proposed rule, we made every effort to avoid including developed areas, such as buildings, paved areas, and other structures, as well as tilled fields, row crops, and golf courses that lack the PCE for *Chorizanthe pungens* var. *pungens.* The scale of the maps prepared under the parameters for publication within the Code of Federal Regulations may not reflect the non-inclusion of such developed areas. Any such structures and the land under them inadvertently left inside critical habitat boundaries shown on the maps of this proposed revision to critical habitat have been excluded by text in the proposed revision and are not proposed for designation as critical habitat. Therefore, Federal actions limited to these areas would not trigger section 7 consultation, unless they affect the species and/or the primary constituent element in adjacent critical habitat.

Using the above criteria we identified nine units that contain the necessary features essential to the conservation of *Chorizanthe pungens* var. *pungens.* Four units are located in southern Santa Cruz and northern Monterey County along the immediate coast; four are located in Monterey County inland from the Monterey Bay (including two in the Aptos area, one in the Prunedale area, and one at former Fort Ord); and one unit is located in the Salinas River Valley near Soledad.

Units were designated based on the PCE being present to support *Chorizanthe pungens* var. *pungens* life processes.

We are proposing to revise the critical habitat designation on lands that meet the first prong of the definition of critical habitat given previously and, therefore, were determined to be occupied at the time of listing and contain the primary constituent element to support life history functions essential for the conservation of the species. The proposed revision to critical habitat is designed to provide sufficient habitat to maintain self-sustaining populations of *C. p.* var. *pungens* throughout its range and provide those habitat components that have the necessary features that are essential for the conservation of the species. The habitat components provide for: (1) individual and population growth, including sites for germination, pollination, reproduction,

pollen and seed dispersal; (2) areas that allow gene flow and provide connectivity between occupied areas; and (3) areas that provide basic requirements for growth, such as appropriate soil type and openings within vegetation cover. All proposed revised critical habitat units were delineated based on the PCE being present to support *C. p.* var. *pungens* life processes.

Section 10(a)(1)(B) of the Act authorizes us to issue permits for the take of listed animal species incidental to otherwise lawful activities. An incidental take permit application must be supported by a habitat conservation plan (HCP) that identifies conservation measures that the permittee agrees to implement for the species to minimize and mitigate the impacts of the requested incidental take. We often exclude non-Federal public lands and private lands that are covered by an existing operative HCP and incidental take permit under section 10(a)(1)(B) of the Act from designated critical habitat because the benefits of exclusion outweigh the benefits of inclusion as discussed in section 4(b)(2) of the Act. We are currently unaware of any areas within this critical habitat proposal that fall into this category.

Special Management Considerations or Protections

When designating critical habitat, we assess whether the areas determined to be occupied at the time of listing and which contain the PCE may require special management considerations or protections. We have also considered how revising the current designation highlights habitat that needs special management consideration or protection.

Many of the known occurrences of *Chorizanthe pungens* var. *pungens* are threatened by direct and indirect effects from habitat fragmentation and loss, and edge effects resulting from urban development. Examples of edge effects include increases in invasive non-native species and increased trampling and soil compaction from recreation (Conservation Biology Institute 2000, p 5). Additional threats to *C. p.* var. *pungens* include road development, invasive species control with herbicides, industrial and recreational development, equestrian and other recreational activities, and dune stabilization using non-native species (59 FR 5499). Threats that could result in unfavorable disturbance intensity, frequency, or timing and can destroy individual plants or deplete any associated seed bank include road maintenance, invasive species control, and fire suppression. These threats may require special management to ensure the long-term conservation of *C. p.* var. *pungens*. Threats specific to individual units are described in the following below titled ''Proposed Revisions to the Critical Habitat Designation.''

Summary of Changes From Previously Designated Critical Habitat

The areas identified in this proposed rule constitute a proposed revision from the areas we designated as critical habitat for *Chorizanthe pungens* var. *pungens* on May 29, 2002 (67 FR 37498). The main differences include the following:

1. The 2002 critical habitat rule (67 FR 37498) consisted of 10 units comprising a total of 18,829 acres (7,620 ha). This proposed revision includes 9 units comprising a total of 11,032 acres (ac) (4,466 ha). Eight of the units in the proposed revision are generally located in the same geographic locations as those from the previous designation and bear the same unit names. The ninth unit in this current proposed revision (Manresa) was included in the previous proposed critical habitat designation in 2000, but dropped from the previous final designation in 2002 due to confusion concerning the identity of the spineflower populations that occur there. Since 2002, we confirmed the presence of *Chorizanthe pungens* var. *pungens* at Manresa State Beach. Additionally, two of the units included in the previous designation in 2002 were not included in this proposed revision. One of these units, Del Rey Oaks, has substantial areas of development within its boundaries, and as a consequence the areas within the unit that contain the PCEs are very fragmented. The second of these units, Bel Mar, is in close proximity to the Manresa unit included in this proposed revision, but not included in the 2002 critical habitat rule. The Monterey spineflower in the Manresa unit was recently discovered and contains a more robust population than the Bel Mar unit. For these reasons, the Del Rey Oaks and Bel Mar units are no longer considered essential to the conservation of the species.

2. We revised the PCEs. The 2002 critical habitat rule listed four separate elements that we believed to be important to maintaining populations of *Chorizanthe pungens* var. *pungens* where they occur (soils, plant communities, low cover of non-native species, and physical processes that support natural dune dynamics). In our proposed revision of critical habitat, we have combined these four elements within one PCE in an effort to emphasize the overarching importance of the structure of the vegetation (mosaic with openings between the dominant elements).

3. Most of the units in this proposed revision are smaller in acreage than their counterpart units in the 2002 critical habitat rule. The decrease in size is due primarily to the removal of numerous parcels in private ownership where, due to the availability of updated aerial imagery, we removed areas of development included in the 2002 critical habitat rule and areas developed since the publication of the prior rule. In addition, the changes to Unit 7 are due to the removal of areas in the 2002 rule that are underlain by soil types not known to support Monterey spineflower, and removal of areas containing suitable soils isolated by development (and not known to support Monterey spineflower). The resulting units are more accurately mapped to include those areas that contain the PCEs.

Proposed Revisions to the Critical Habitat Designation

We are proposing nine critical habitat units for *Chorizanthe pungens* var. *pungens*. These units, which generally correspond to those units in the 2002 designation, if finalized, would entirely replace the current critical habitat designation for *Chorizanthe pungens* var. *pungens* in 50 CFR 17.95(a). The critical habitat units described below constitute our best assessment at this time of areas determined to be occupied at the time of listing that contain the primary constituent element, and that may require special management. The nine proposed critical habitat units are: Sunset Unit 1, Moss Landing Unit 2, Marina Unit 3, Asilomar Unit 4, Freedom Boulevard Unit 5, Manresa Unit 6, Prunedale Unit 7, Fort Ord Unit 8, and Soledad Unit 9.

The approximate area encompassed within each proposed critical habitat unit is shown in Table 1.

TABLE 1.—CRITICAL HABITAT UNITS PROPOSED FOR CHORIZANTHE PUNGENS VAR. PUNGENS

[Area estimates reflect all land within critical habitat unit boundaries] [1]

Unit name	State lands		Private lands		County and other local jurisdictions		Federal lands		Estimate of total acreages	
	Acres	Hectares	Acres	Hectares	Acres	Hectares	Acres	Hectares	Acres	Hectares
1. Sunset	85	35	0	0	0	0	0	0	85	35
2. Moss Landing	224	91	0	0	0	0	0	0	224	91
3. Marina [2]	884	358	0	0	0	0	0	0	884	358
4. Asilomar	40	16	0	0	4	2	4	1	48	19
5. Freedom Blvd.	0	0	24	10	0	0	0	0	24	10
6. Manresa	94	38	0	0	0	0	0	0	94	38
7. Prunedale	155	63	17	7	18	7	0	0	190	77
8. Fort Ord [2]	606	245	0	0	654	265	8,172	3,307	9,432	3,817
9. Soledad	0	0	51	21	0	0	0	0	51	21
Approximate Total	2,088	845	92	38	676	274	8,176	3,309	11,032	4,466

[1] Approximate acres have been converted to hectares (1 ha = 2.47 ac). Based on the level of imprecision of mapping of each unit, hectares and acres greater than 10 have been rounded to the nearest 5; hectares and acres less than or equal to 10 have been rounded to the nearest whole number. Totals are sums of units.

[2] Acreages assigned to various landowner categories for the Fort Ord and Marina units (on former Fort Ord) reflect future land recipient, as indicated by 2006 Army records.

We present descriptions of all units, and reasons why they meet the definition of critical habitat for *Chorizanthe pungens* var. *pungens*, below.

Unit 1: Sunset (85 ac (35 ha))

This unit consists of coastal beaches, dunes, and bluffs located west of Watsonville in southern Santa Cruz County. Unit 1 contains space for individual and population growth, including sites for seed dispersal and germination; provides the basic requirements for growth; and includes soils primarily in the coastal beach, dune land, and Baywood sand series (Soil Conservation Service 1978, pp. 13–25; 1980 (maps)) (PCE 1). This unit was occupied at the time of listing and is currently occupied (CNDDB 2006, CDPR 2006a). This unit consists exclusively of State land (85 ac (35 ha)) and is entirely within the boundaries of Sunset State Beach. The unit includes land from Sunset Beach Road south to the gate on Shell Road, just north of the mouth of the Pajaro River, and west of Shell Road, which extends the length of the park. Unit 1 is important because it supports a large population of *Chorizanthe pungens* var. *pungens* that in some years numbers in the tens of thousands (CNDDB 2006, CDPR 2006a). Threats that may require special management considerations or protection in this unit include invasive non-native plants, particularly European beachgrass which forms dense stands on coastal beaches and crowds out *C. p.* var. *pungens*, and recreational activities, including camping and foot traffic, which could result in the trampling of plants.

Unit 2: Moss Landing (224 ac (91 ha))

This unit consists of coastal beaches, dunes, and bluffs to the north and south of the community of Moss Landing in northern Monterey County. Unit 2 contains space for individual and population growth, including sites for seed dispersal and germination, and areas that provide for the basic requirements for growth, including soils in the coastal beach, and dune land series (Soil Conservation Service 1978, pp. 13–25) (PCE 1). The northern portion of this unit includes lands owned and managed by the State, including portions of Zmudowski State Beach and Moss Landing State Beach between the mouths of the Pajaro River and Elkhorn Slough. The southern portion of this unit includes State lands within Salinas River State Beach. This unit was occupied at the time of listing and was included in our previous critical habitat designation. Herbarium records indicate that this site was occupied as early as 1933 and has remained occupied through time (Consortium of California Herbaria 2006 cites collections by H.S. Tates, 1936; T. Craig, 1933; J. Thomas, 1950). *Chorizanthe pungens* var. *pungens* was also recently observed in this unit (CDPR 2006b, unpaginated). This unit contains one of only five populations found along the coast, and it may provide connectivity between the Sunset unit to the north, and the Marina unit to the south. Threats that may require special management considerations or protection in this unit consist of invasive non-native plants, particularly ice-plant which forms dense ground cover on coastal beaches and crowds out *C. p.* var. *pungens*; and recreational activities including foot traffic, which could result in the trampling of plants.

Unit 3: Marina (884 ac (358 ha))

This unit consists of coastal beaches, dunes, and bluffs ranging from just south of the mouth of the Salinas River, south to the city of Monterey in northern Monterey County; these lands are entirely west of Highway 1. Unit 3 contains space for individual and population growth, including sites for seed dispersal and germination, and areas that provide for the basic requirements for growth, including soils in the coastal beach, dune land, and Oceano loamy sand soil series (Soil Conservation Service 1978, pp. 13–25, 54–55) (PCE 1). This unit was occupied at the time of listing and it is currently occupied (CNDDB 2006, CDPR 2006, Service 2002 p. 54). Unit 3 is comprised of State lands, including Marina State Beach and Monterey State Beach. This unit is important because it supports a population of *C. p.* var. *pungens* that numbers in the thousands in some years (CNDDB 2006, Service 1998 p. 67); it is the southernmost of the Monterey Bay area coastal populations; and it may provide connectivity between the populations along the coast and the more interior populations found at former Fort Ord. Threats that may require special management considerations or protection in this unit consist of invasive non-native plants, particularly ice-plant which forms dense ground cover on coastal beaches and crowds out *C. p.* var. *pungens*; recreational activities such as foot traffic which could result in the trampling of

plants; and edge effects of urban development.

Unit 4: Asilomar (48 ac (19 ha))

This unit consists of coastal dunes and bluffs near the communities of Pacific Grove and Pebble Beach on the Monterey Peninsula in northern Monterey County. The unit includes a portion of Asilomar State Beach and extends just beyond Lighthouse Avenue to the north and terminates at the boundary of the Asilomar Conference Grounds. The unit's eastern boundary extends from Highway 68 north along Asilomar Avenue and then turns west on Arena Avenue where the boundary connects to Sunset Drive. Unit 4 contains space for individual and population growth, including sites for seed dispersal and germination; and areas that provide for the basic requirements for growth, including soils in the coastal beach, dune land, and Baywood sand soil series (Soil Conservation Service 1978, pp. 13–25) (PCE 1). The unit is comprised of 4 ac (1 ha) of Federal lands, 40 ac (16 ha) of State lands at Asilomar State Beach, and 4 ac (2 ha) of local government ownership. This unit was occupied at the time of listing and is currently occupied. Herbarium records that include specimens from this area include the following (collector and year): Lemmon 1881, L.C. Wheeler, 1936, R. Hoover, 1941 and 1963, L.S. Rose 1963, (Consortium of California Herbaria 2006)). This unit currently supports a population of *Chorizanthe pungens* var. *pungens* that numbers in the hundreds (Moss 2000, unpaginated). This unit is important because it is the southernmost of only five populations of *C. p.* var. *pungens* along the coast and it is the only Peninsular population in the proposed designation. Preserving the genetic characteristics that have allowed individuals at this site to survive at the southern end of the species' range along the coast is important for the long-term survival and conservation of *C. p.* var. *pungens.* Threats that may require special management considerations or protection in this unit consist of invasive non-native plants, particularly ice-plant which forms dense ground cover on coastal beaches and crowds out *C. p.* var. *pungens*; recreational activities such as foot traffic which could result in the trampling of plants; and edge effects of urban development. An additional threat in this unit is the expansion of unregulated vehicle parking in the dunes caused by the high numbers of visitors this area receives each year.

Unit 5: Freedom Boulevard (24 ac (10 ha))

This unit consists of grassland, maritime chaparral, and oak woodland habitat near the western terminus of Freedom Boulevard and northeast of Highway 1 in Santa Cruz County. This unit consists entirely of private lands (24 ac (10 ha)). Unit 5 contains space for individual and population growth, including sites for seed dispersal and germination; areas that provide for the basic requirements for growth; and includes soils in the Baywood sand and Ben Lomond sandy loam series (Soil Conservation Service 1980, pp. 64–65; maps) (PCE 1). This unit was occupied at the time of listing and is currently occupied (CNDDB 2006, EOs 32 and 34; Morgan 2006, unpaginated). This unit currently supports a population of *Chorizanthe pungens* var. *pungens* that numbers in the thousands in favorable years, but many fewer in unfavorable years (CNDDB 2006, EOs 32, 34). This unit is important because it is the northernmost occurrence in the designation. Threats that may require special management considerations or protection in this unit include invasive non-native plants, particularly annual grasses which crowd out *C. p.* var. *pungens,* and edge effects from urban development.

Unit 6: Manresa (94 ac (38 ha))

This unit consists of coastal bluffs along the immediate coast, south of Seacliff State Beach and north of Sunset State Beach in Santa Cruz County. Unit 6 contains space for individual and population growth, including sites for seed dispersal and germination, and areas that provide for the basic requirements for growth, including soils in the coastal beach, Baywood sand, and Elder sandy loam series (Soil Conservation Service 1980, pp. 11–70, maps (PCE 1). This unit is comprised entirely of lands owned and managed by the State at Manresa State Beach. This unit was occupied at the time of listing and is currently occupied. This unit is important because it is the most northerly population that is known from the immediate coast and provides connectivity to populations in the Sunset unit to the south. Threats that may require special management considerations or protection in this unit consist of invasive non-native plants, and recreational activities including foot traffic, which could result in the trampling of plants.

Unit 7: Prunedale (190 ac (77 ha))

This unit consists of grassland, maritime chaparral, and oak woodland in the area around Prunedale in northern Monterey County. On the west side of Highway 101, the unit includes Manzanita County Park located between Castroville Boulevard and San Miguel Canyon Road. On the east side of Highway 101, the unit consists of four subunits. The four subunits support similar plant communities and need similar types of special management; therefore, we discuss them as a unit. Unit 7 contains space for individual and population growth, including sites for seed dispersal and germination, and areas that provide for the basic requirements for growth, including soils in the Arnold loamy sand, Santa Ynez fine sandy loam, and Arnold-Santa Ynez complex series (Soil Conservation Service 1978, pp. 9–11, 72–73) (PCE 1). This unit consists of 155 ac (63 ha) of State lands, 18 ac (7 ac) of local agency lands (Manzanita County Park), and 17 ac (7 ha) of Pacific Gas and Electric easement lands. This unit was occupied at the time of listing and was included in our rule in reference to the Prunedale area (59 FR 5499) and is currently occupied (Caltrans 2001, Consortium of California Herbaria 2006). This unit is important because it is one of only four units that are known to support populations associated with maritime chaparral and oak woodland habitats more representative of hotter, interior sites and is the easternmost of the proposed units in the interior hills. Threats that may require special management considerations or protections in this unit include invasive non-native plants which crowd out *C. p.* var. *pungens*, edge effects from urban development, and recreational activities such as off road vehicles which can crush plants and destroy seeds.

Unit 8: Fort Ord (9,432 ac (3,817 ha))

This unit consists of grassland, maritime chaparral, coastal scrub, and oak woodland on the former Department of Defense (DOD) base at Fort Ord, east of the city of Seaside in northern Monterey County. This unit is entirely within the area formerly known as Fort Ord, bounded by Highway 1 on the northwest, the Salinas River to the east, and Monterey-Salinas Road (Highway 68) to the south. Approximately 87 percent of this critical habitat unit is Federal land (8,172 ac (3,307 ha)) managed by the BLM and the Army, 6 percent is State land, and 7 percent is under local jurisdictions. Portions of Fort Ord have been transferred to the BLM; University of California, Santa Cruz; California State University at Monterey Bay; and local city and county jurisdictions. All of the lands included in this unit are designated as current or

future habitat reserves under the Army's habitat management plan (ACOE 1997, Attachment A map; Zander Associates 2002, Figures 4–6). Unit 8 contains space for individual and population growth, including sites for seed dispersal and germination, and areas that provide for the basic requirements for growth, and includes soils in the Arnold-Santa Ynez complex, Baywood sand, and Oceano loamy sand series (Soil Conservation Service 1978, pp. 9–73). Lands in this unit are intended to be managed at a landscape scale, using prescribed fire, as needed, to maintain a range of different aged maritime chaparral stands (ACOE 1997, p. 4.24–4.25) and by doing so preserve substantial populations of rare maritime chaparral species in the Monterey Bay area. This unit was occupied at the time of listing (59 FR 5499) and is currently occupied. This unit is important because it currently supports multiple large populations of *Chorizanthe pungens* var. *pungens* that number in the tens of thousands in some years (CNDDB 2006, EO 2; Jones and Stokes 1992, Figure F–3; BLM 2006), and it is one of only five units which include maritime chaparral and oak woodland habitats more representative of hotter, interior sites. Threats that may require special management considerations or protection in this unit include invasive species that crowd out *C. p.* var. *pungens,* munitions clean-up methods on former ranges that remove and chip all standing vegetation, and recreational activities and road and trail maintenance, which could result in the trampling of plants.

Unit 9: Soledad (51 ac (21 ha))

This unit consists of an interior dune in the floodplain of the Salinas River channel just south of the town of Soledad in central Monterey County on privately owned lands. Unit 9 contains space for individual and population growth, including sites for seed dispersal and germination, and areas that provide for the basic requirements for growth, including soils in the dune land and Metz complex soil series (Soil Conservation Service 1978, pp. 24, 48–49) (PCE 1). This unit was occupied at the time of listing and is currently occupied. Approximately 5,000 plants were observed in this unit in 1994 (CNDDB 2006 EO 28, Wesco 1994, pp. 5–8). This unit is important because it is the southernmost interior location that supports a population and the only unit where *Chorizanthe pungens* var. *pungens* grows in interior floodplain dune habitat. This population is geographically remote from all others in this designation. Protecting peripheral or isolated populations of rare species is highly desirable because they may contain genetic variation not found in core populations (Lesica and Allendorf 1995, p. 755–757) Threats that may require special management considerations or protection in this unit include invasive non-native plants which crowd out *C. p.* var. *pungens;* overspray of herbicides and pesticides from agricultural operations; and vegetation clearing activities associated with road maintenance.

Effects of Critical Habitat Designation

Section 7 Consultation

Section 7 of the Act requires Federal agencies, including the Service, to ensure that actions they fund, authorize, or carry out are not likely to destroy or adversely modify critical habitat. In our regulations at 50 CFR 402.02, we define destruction or adverse modification as ''a direct or indirect alteration that appreciably diminishes the value of critical habitat for both the survival and recovery of a listed species. Such alterations include, but are not limited to, alterations adversely modifying any of those physical or biological features that were the basis for determining the habitat to be critical.'' However, recent decisions by the 5th and 9th Circuit Court of Appeals have invalidated this definition (see *Gifford Pinchot Task Force* v. *U.S. Fish and Wildlife Service,* 378 F. 3d 1059 (9th Cir 2004) and *Sierra Club* v. *U.S. Fish and Wildlife Service et al.,* 245 F.3d 434, 442F (5th Cir 2001)). Pursuant to current national policy and the statutory provisions of the Act, destruction or adverse modification is determined on the basis of whether, with implementation of the proposed Federal action, the affected critical habitat would remain functional (or retain the current ability for the primary constituent elements to be functionally established) to serve the intended conservation role for the species.

Section 7(a) of the Act requires Federal agencies, including the Service, to evaluate their actions with respect to any species that is proposed or listed as endangered or threatened and with respect to its critical habitat, if any is proposed or designated. Regulations implementing this interagency cooperation provision of the Act are codified at 50 CFR part 402.

Section 7(a)(4) of the Act requires Federal agencies to confer with us on any action that is likely to jeopardize the continued existence of a proposed species or result in destruction or adverse modification of proposed critical habitat. This is a procedural requirement only. However, once proposed species becomes listed, or proposed critical habitat is designated as final, the full prohibitions of section 7(a)(2) apply to any Federal action. The primary utility of the conference procedures is to maximize the opportunity for a Federal agency to adequately consider proposed species and critical habitat and avoid potential delays in implementing their proposed action as a result of the section 7(a)(2) compliance process, should those species be listed or the critical habitat designated.

Under conference procedures, the Service may provide advisory conservation recommendations to assist the agency in eliminating conflicts that may be caused by the proposed action. The Service may conduct either informal or formal conferences. Informal conferences are typically used if the proposed action is not likely to have any adverse effects to the proposed species or proposed critical habitat. Formal conferences are typically used when the Federal agency or the Service believes the proposed action is likely to cause adverse effects to proposed species or critical habitat, inclusive of those that may cause jeopardy or adverse modification.

The results of an informal conference are typically transmitted in a conference report; while the results of a formal conference are typically transmitted in a conference opinion. Conference opinions on proposed critical habitat are typically prepared according to 50 CFR 402.14, as if the proposed critical habitat were designated. We may adopt the conference opinion as the biological opinion when the critical habitat is designated, if no substantial new information or changes in the action alter the content of the opinion (see 50 CFR 402.10(d)). As noted above, any conservation recommendations in a conference report or opinion are strictly advisory.

If a species is listed or critical habitat is designated, section 7(a)(2) of the Act requires Federal agencies to ensure that activities they authorize, fund, or carry out are not likely to jeopardize the continued existence of such a species or to destroy or adversely modify its critical habitat. If a Federal action may affect a listed species or its critical habitat, the responsible Federal agency (action agency) must enter into consultation with us. As a result of this consultation, compliance with the requirements of section 7(a)(2) will be documented through the Service's issuance of: (1) a concurrence letter for Federal actions that may affect, but are not likely to adversely affect, listed species or critical habitat; or (2) a

biological opinion for Federal actions that may affect, but are likely to adversely affect, listed species or critical habitat.

When we issue a biological opinion concluding that a project is likely to result in jeopardy to a listed species or the destruction or adverse modification of critical habitat, we also provide reasonable and prudent alternatives to the project, if any are identifiable. ''Reasonable and prudent alternatives'' are defined at 50 CFR 402.02 as alternative actions identified during consultation that can be implemented in a manner consistent with the intended purpose of the action, that are consistent with the scope of the Federal agency's legal authority and jurisdiction, that are economically and technologically feasible, and that the Director believes would avoid jeopardy to the listed species or destruction or adverse modification of critical habitat. Reasonable and prudent alternatives can vary from slight project modifications to extensive redesign or relocation of the project. Costs associated with implementing a reasonable and prudent alternative are similarly variable.

Regulations at 50 CFR 402.16 require Federal agencies to reinitiate consultation on previously reviewed actions in instances where a new species is listed or critical habitat is subsequently designated that may be affected and the Federal agency has retained discretionary involvement or control over the action or such discretionary involvement or control is authorized by law. Consequently, some Federal agencies may request reinitiation of consultation with us on actions for which formal consultation has been completed, if those actions may affect subsequently listed species or designated critical habitat or adversely modify or destroy proposed critical habitat.

Federal activities that may affect *Chorizanthe pungens* var. *pungens* or its designated critical habitat will require section 7 consultation under the Act. Activities on State, tribal, local or private lands requiring a Federal permit (such as a permit from the Corps under section 404 of the Clean Water Act or a permit under section 10(a)(1)(B) of the Act from the Service) or involving some other Federal action (such as funding from the Federal Highway Administration, Federal Aviation Administration, or the Federal Emergency Management Agency) will also be subject to the section 7 consultation process. Federal actions not affecting listed species or critical habitat, and actions on State, tribal, local or private lands that are not federally-funded, authorized, or permitted, do not require section 7 consultations.

Application of the Jeopardy and Adverse Modification Standards for Actions Involving Effects to Chorizanthe pungens var. pungens and Its Critical Habitat

Jeopardy Standard

Prior to and following designation of critical habitat, the Service has applied an analytical framework for *Chorizanthe pungens* var. *pungens* jeopardy analyses that relies heavily on the importance of core area populations to the survival and recovery of the *C. p.* var. *pungens.* The section 7(a)(2) analysis is focused not only on these populations but also on the habitat conditions necessary to support them.

The jeopardy analysis usually expresses the survival and recovery needs of the *Chorizanthe pungens* var. *pungens* in a qualitative fashion without making distinctions between what is necessary for survival and what is necessary for recovery. Generally, if a proposed Federal action is incompatible with the viability of the affected core area population(s), inclusive of associated habitat conditions, a jeopardy finding is considered to be warranted, because of the relationship of each core area population to the survival and recovery of the species as a whole.

Adverse Modification Standard

The analytical framework described in the Director's December 9, 2004, memorandum will be used to complete section 7(a)(2) analyses for Federal actions affecting *Chorizanthe pungens* var. *pungens* critical habitat. The key factor related to the adverse modification determination is whether, with implementation of the proposed Federal action, the affected critical habitat would remain functional (or retain the current ability for the primary constituent elements to be functionally established) to serve the intended conservation role for the species. Generally, the conservation role of *C. p.* var. *pungens* critical habitat units is to support viable core area populations.

Section 4(b)(8) of the Act requires us to briefly evaluate and describe in any proposed or final regulation that designates critical habitat those activities involving a Federal action that may destroy or adversely modify such habitat, or that may be affected by such designation. Activities that may destroy or adversely modify critical habitat may also jeopardize the continued existence of the species.

Activities that may destroy or adversely modify critical habitat are those that alter the PCEs to an extent that the conservation value of critical habitat for the *Chorizanthe pungens* var. *pungens* is appreciably reduced. Activities that, when carried out, funded, or authorized by a Federal agency, may affect critical habitat and therefore result in consultation for the *C. p.* var. *pungens* include, but are not limited to:

(1) Actions that would degrade or destroy native maritime chaparral, dune, and oak woodland communities, including but not limited to, livestock grazing, clearing, discing, introducing or encouraging the spread of non-native plants, and heavy recreational use;

(2) Actions that would appreciably diminish habitat value or quality through indirect effects (e.g., edge effects, invasion of non-native plants or animals, or fragmentation).

All of the units in the proposed revision to critical habitat to contain features essential to the conservation of *Chorizanthe pungens* var. *pungens.* All units are within the geographic range of the species, and all were occupied by the species at the time of listing. All units are currently occupied by *C. p.* var. *pungens.* Federal agencies already consult with us on activities in areas currently occupied by the *C. p.* var. *pungens*, or if the species may be affected by the action, to ensure that their actions do not jeopardize the continued existence of the *C. p.* var. *pungens.*

Application of Section 4(a)(3) of the Act

The Sikes Act Improvement Act of 1997 (Sikes Act) (16 U.S.C. 670a) required each military installation that includes land and water suitable for the conservation and management of natural resources to complete, by November 17, 2001, an Integrated Natural Resource Management Plan (INRMP). An INRMP integrates implementation of the military mission of the installation with stewardship of the natural resources found on the base. Each INRMP includes an assessment of the ecological needs on the installation, including the need to provide for the conservation of listed species; a statement of goals and priorities; a detailed description of management actions to be implemented to provide for these ecological needs; and a monitoring and adaptive management plan. Among other things, each INRMP must, to the extent appropriate and applicable, provide for fish and wildlife management, fish and wildlife habitat enhancement or modification, wetland protection, enhancement, and

restoration where necessary to support fish and wildlife and enforcement of applicable natural resource laws.

The National Defense Authorization Act for Fiscal Year 2004 (Public Law 108–136) amended the Act to limit areas eligible for designation as critical habitat. Specifically, section 4(a)(3)(B)(i) of the Act (16 U.S.C. 1533(a)(3)(B)(i)) now provides: The Secretary shall not designate as critical habitat any lands or other geographical areas owned or controlled by the Department of Defense, or designated for its use, that are subject to an integrated natural resources management plan prepared under section 101 of the Sikes Act (16 U.S.C. 670a), if the Secretary determines in writing that such plan provides a benefit to the species for which critical habitat is proposed for designation.

Lands at former Fort Ord are not discussed in this section because Fort Ord is no longer an active military installation. All but a few hundred acres at former Fort Ord are to be eventually transferred to non-military entities. The few hundred acres that the Army may retain do not occur within this proposed critical habitat designation.

Application of Section 4(b)(2) of the Act

Section 4(b)(2) of the Act states that critical habitat shall be designated, and revised, on the basis of the best available scientific data after taking into consideration the economic impact, national security impact, and any other relevant impact, of specifying any particular area as critical habitat. The Secretary may exclude an area from critical habitat if he determines that the benefits of such exclusion outweigh the benefits of specifying such area as part of the critical habitat, unless he determines, based on the best scientific data available, that the failure to designate such area as critical habitat will result in the extinction of the species. In making that determination, the Congressional record is clear that the Secretary is afforded broad discretion regarding which factor(s) to use and how much weight to give to any factor.

Pursuant to section 4(b)(2) of the Act, we must consider relevant impacts in addition to economic ones. We anticipate no impact to national security, Tribal lands, or habitat conservation plans from this proposed revision to the current critical habitat designation. Based on the best available information, we believe that all of the proposed revised units contain the features essential to *Chorizanthe pungens* var. *pungens* or are otherwise essential for the conservation of this species. As such, we have considered but are not proposing to exclude any lands from this designation based on the potential impacts to these or other factors.

Economic Analysis

An analysis of the economic impacts of this proposed critical habitat revision for *Chorizanthe pungens* var. *pungens* is being prepared. We will announce the availability of the draft economic analysis as soon as it is completed, at which time we will seek public review and comment. At that time, copies of the draft economic analysis will be available for downloading from the Internet at *http://www.fws.gov/ventura/* or by contacting the VFWO directly (see **ADDRESSES** section).

Peer Review

In accordance with our joint policy published in the **Federal Register** on July 1, 1994 (59 FR 34270), we will seek the expert opinions of at least three appropriate and independent specialists regarding this proposed revised rule. The purpose of such review is to ensure that our critical habitat designation is based on scientifically sound data, assumptions, and analyses. We will send these peer reviewers copies of this proposed revised rule immediately following publication in the **Federal Register**. We will invite these peer reviewers to comment, during the public comment period, on the specific assumptions and conclusions regarding the proposed revisions to the current critical habitat designation.

We will consider all comments and information received during the comment period on this proposed revised rule during preparation of a final rulemaking. Accordingly, the final decision may differ from this proposed revision.

Public Hearings

The Act provides for one or more public hearings on this proposal, if requested. Requests for public hearings must be made in writing at least 15 days prior to the close of the public comment period. We will schedule public hearings on this proposal, if any are requested, and announce the dates, times, and places of those hearings in the **Federal Register** and local newspapers at least 15 days prior to the first hearing.

Clarity of the Rule

Executive Order 12866 requires each agency to write regulations and notices that are easy to understand. We invite your comments on how to make this proposed revised rule easier to understand, including answers to questions such as the following: (1) Are the requirements in the proposed revised rule clearly stated? (2) Does the proposed revised rule contain technical jargon that interferes with the clarity? (3) Does the format of the proposed revised rule (grouping and order of the sections, use of headings, paragraphing, and so forth) aid or reduce its clarity? (4) Is the description of the notice in the **SUPPLEMENTARY INFORMATION** section of the preamble helpful in understanding the proposed revised rule? (5) What else could we do to make this proposed revised rule easier to understand?

Send a copy of any comments on how we could make these proposed revisions to the critical habitat designation easier to understand to: Office of Regulatory Affairs, Department of the Interior, Room 7229, 1849 C Street, NW., Washington, DC 20240. You may e-mail your comments to this address: *Exsec@ios.doi.gov.*

Required Determinations

Regulatory Planning and Review

In accordance with Executive Order 12866, this document is a significant rule in that it may raise novel legal and policy issues, but it is not anticipated to have an annual effect on the economy of $100 million or more or affect the economy in a material way. Due to the tight timeline for publication in the **Federal Register**, the Office of Management and Budget (OMB) has not formally reviewed this rule. We are preparing a draft economic analysis of this proposed action, which will be available for public comment, to determine the economic consequences of designating the specific areas as critical habitat. This economic analysis also will be used to determine compliance with Executive Order 12866, Regulatory Flexibility Act, Small Business Regulatory Enforcement Fairness Act, and Executive Order 12630.

Further, Executive Order 12866 directs Federal Agencies promulgating regulations to evaluate regulatory alternatives (Office of Management and Budget, Circular A–4, September 17, 2003). Pursuant to Circular A–4, once it has been determined that the Federal regulatory action is appropriate, then the agency will need to consider alternative regulatory approaches. Since the determination of critical habitat is a statutory requirement under the Endangered Species Act of 1973, as amended (Act) (16 U.S.C. 1531 *et seq.*), we must then evaluate alternative regulatory approaches, where feasible, when promulgating a designation of critical habitat.

In developing our designations of critical habitat, we consider economic impacts, impacts to national security, and other relevant impacts under section 4(b)(2) of the Act. Based on the discretion allowable under this provision, we may exclude any particular area from the designation of critical habitat providing that the benefits of such exclusion outweigh the benefits of specifying the area as critical habitat and that such exclusion would not result in the extinction of the subspecies. As such, we believe that the evaluation of the inclusion or exclusion of particular areas, or combination thereof, in a designation constitutes our regulatory alternative analysis.

Within these areas, the types of Federal actions or authorized activities that we have identified as potential concerns are listed above in the section on Section 7 Consultation. The availability of the draft economic analysis will be announced in the **Federal Register** and in local newspapers so that it is available for public review and comments. The draft economic analysis can be obtained from the internet website at *http://www.fws.gov/ventura/* or by contacting the VFWO directly (see **ADDRESSES** section).

Regulatory Flexibility Act (5 U.S.C. 601 et seq.)

Under the Regulatory Flexibility Act (5 U.S.C. 601 *et seq.*, as amended by the Small Business Regulatory Enforcement Fairness Act (SBREFA) of 1996), whenever an agency is required to publish a notice of rulemaking for any proposed or final rule, it must prepare and make available for public comment a regulatory flexibility analysis that describes the effects of the rule on small entities (i.e., small businesses, small organizations, and small government jurisdictions). However, no regulatory flexibility analysis is required if the head of the agency certifies the rule will not have a significant economic impact on a substantial number of small entities. The SBREFA amended the Regulatory Flexibility Act (RFA) to require Federal agencies to provide a statement of the factual basis for certifying that the rule will not have a significant economic impact on a substantial number of small entities.

At this time, the Service lacks the available economic information necessary to provide an adequate factual basis for the required RFA finding. Therefore, the RFA finding is deferred until completion of the draft economic analysis prepared under section 4(b)(2) of the Act and E.O. 12866. This draft economic analysis will provide the required factual basis for the RFA finding. Upon completion of the draft economic analysis, the Service will publish a notice of availability of the draft economic analysis of the proposed designation and reopen the public comment period for the proposed designation for an additional 60 days. The Service will include with the notice of availability, as appropriate, an initial regulatory flexibility analysis or a certification that the rule will not have a significant economic impact on a substantial number of small entities accompanied by the factual basis for that determination. The Service has concluded that deferring the RFA finding until completion of the draft economic analysis is necessary to meet the purposes and requirements of the RFA. Deferring the RFA finding in this manner will ensure that the Service makes a sufficiently informed determination based on adequate economic information and provides the necessary opportunity for public comment.

Executive Order 13211

On May 18, 2001, the President issued an Executive Order (E.O. 13211; Actions Concerning Regulations That Significantly Affect Energy Supply, Distribution, or Use) on regulations that significantly affect energy supply, distribution, and use. Executive Order 13211 requires agencies to prepare Statements of Energy Effects when undertaking certain actions. Although this proposed rule to designate critical habitat for the *Chorizanthe pungens* var. *pungens* is a significant regulatory action under Executive Order 12866, it is not expected to significantly affect energy supplies, distribution, or use. Therefore, this action is not a significant energy action, and no Statement of Energy Effects is required.

Unfunded Mandates Reform Act (2 U.S.C. 1501 et seq.)

In accordance with the Unfunded Mandates Reform Act (2 U.S.C. 1501), the Service makes the following findings:

(a) This rule will not produce a Federal mandate. In general, a Federal mandate is a provision in legislation, statute or regulation that would impose an enforceable duty upon State, local, tribal governments, or the private sector and includes both ''Federal intergovernmental mandates'' and ''Federal private sector mandates.'' These terms are defined in 2 U.S.C. 658(5)–(7). ''Federal intergovernmental mandate'' includes a regulation that ''would impose an enforceable duty upon State, local, or tribal governments'' with two exceptions. It excludes ''a condition of Federal assistance.'' It also excludes ''a duty arising from participation in a voluntary Federal program,'' unless the regulation ''relates to a then-existing Federal program under which $500,000,000 or more is provided annually to State, local, and tribal governments under entitlement authority,'' if the provision would ''increase the stringency of conditions of assistance'' or ''place caps upon, or otherwise decrease, the Federal Government's responsibility to provide funding,'' and the State, local, or tribal governments ''lack authority'' to adjust accordingly. At the time of enactment, these entitlement programs were: Medicaid; AFDC work programs; Child Nutrition; Food Stamps; Social Services Block Grants; Vocational Rehabilitation State Grants; Foster Care, Adoption Assistance, and Independent Living; Family Support Welfare Services; and Child Support Enforcement. ''Federal private sector mandate'' includes a regulation that ''would impose an enforceable duty upon the private sector, except (i) a condition of Federal assistance or (ii) a duty arising from participation in a voluntary Federal program.''

The designation of critical habitat does not impose a legally binding duty on non-Federal government entities or private parties. Under the Act, the only regulatory effect is that Federal agencies must ensure that their actions do not destroy or adversely modify critical habitat under section 7. While non-Federal entities that receive Federal funding, assistance, or permits, or that otherwise require approval or authorization from a Federal agency for an action, may be indirectly impacted by the designation of critical habitat, the legally binding duty to avoid destruction or adverse modification of critical habitat rests squarely on the Federal agency. Furthermore, to the extent that non-Federal entities are indirectly impacted because they receive Federal assistance or participate in a voluntary Federal aid program, the Unfunded Mandates Reform Act would not apply; nor would critical habitat shift the costs of the large entitlement programs listed above on to State governments.

(b) We do not believe that this rule will significantly or uniquely affect small governments because much (93 percent) of the proposed critical habitat is owned and managed by the Federal government and the State and only about 6 percent of the total proposed critical habitat designation is owned and managed by local jurisdictions. Of the lands under local jurisdiction, 97

percent are associated with land transfers through Fort Ord and are therefore already taking into consideration the management of *Chorizanthe pungens* var. *pungens* and other sensitive species. In addition, less than 1 percent of the total proposed designation is private lands. Therefore, a Small Government Agency Plan is not required. We will, however, further evaluate this issue as we conduct our economic analysis and revise this assessment if appropriate.

Takings

In accordance with Executive Order 12630 (''Government Actions and Interference with Constitutionally Protected Private Property Rights''), we have analyzed the potential takings implications of designating critical habitat for the *Chorizanthe pungens* var. *pungens* in a takings implications assessment. The takings implications assessment concludes that this designation of critical habitat for the *Chorizanthe pungens* var. *pungens* does not pose significant takings implications. However, we will further evaluate this issue as we conduct our economic analysis and review and revise this assessment as warranted.

Federalism

In accordance with Executive Order 12630 (''Government Actions and Interference with Constitutionally Protected Private Property Rights''), we have analyzed the potential takings implications of designating critical habitat for the Monterey spine flower in a takings implications assessment. The takings implications assessment concludes that this designation of critical habitat for the Monterey spine flower does not pose significant takings implications. However, we will further evaluate this issue as we conduct our economic analysis and review and revise this assessment as warranted.

Civil Justice Reform

In accordance with Executive Order 12988, the Office of the Solicitor has determined that the rule does not unduly burden the judicial system and meets the requirements of sections 3(a) and 3(b)(2) of the Order. We have proposed designating critical habitat in accordance with the provisions of the Act. This proposed revised rule uses standard property descriptions and identifies the primary constituent elements within the designated areas to assist the public in understanding the habitat needs of *Chorizanthe pungens* var. *pungens.*

Paperwork Reduction Act of 1995 (44 U.S.C. 3501 et seq.)

This rule does not contain any new collections of information that require approval by OMB under the Paperwork Reduction Act. This rule will not impose recordkeeping or reporting requirements on State or local governments, individuals, businesses, or organizations. An agency may not conduct or sponsor, and a person is not required to respond to, a collection of information unless it displays a currently valid OMB control number.

National Environmental Policy Act

It is our position that, outside the Tenth Circuit, we do not need to prepare environmental analyses as defined by the NEPA in connection with designating critical habitat under the Endangered Species Act of 1973, as amended. We published a notice outlining our reasons for this determination in the **Federal Register** on October 25, 1983 (48 FR 49244). This assertion was upheld in the courts of the Ninth Circuit (*Douglas County* v. *Babbitt*, 48 F.3d 1495 (9th Cir. Ore. 1995), cert. denied 116 S. Ct. 698 (1996)).

Government-to-Government Relationship With Tribes

In accordance with the President's memorandum of April 29, 1994, ''Government-to-Government Relations with Native American Tribal Governments'' (59 FR 22951), Executive Order 13175, and the Department of Interior's manual at 512 DM 2, we readily acknowledge our responsibility to communicate meaningfully with recognized Federal Tribes on a government-to-government basis. We have determined that there are no tribal lands occupied at the time of listing or currently occupied that contain the features essential for the conservation and no tribal lands that are unoccupied areas that are essential for the conservation of *Chorizanthe pungens* var. *pungens*. Therefore, in this proposed revised rule, critical habitat for the *C. p.* var. *pungens* has not been proposed for designation on tribal lands.

References Cited

A complete list of all references cited in this rulemaking is available upon request from the Field Supervisor, VFWO (see **ADDRESSES** section).

Author(s)

The primary author of this package is the VFWO.

List of Subjects in 50 CFR Part 17

Endangered and threatened species, Exports, Imports, Reporting and recordkeeping requirements, Transportation.

Proposed Regulation Promulgation

Accordingly, we propose to amend part 17, subchapter B of chapter I, title 50 of the Code of Federal Regulations, as set forth below:

PART 17—[AMENDED]

1. The authority citation for part 17 continues to read as follows:

Authority: 16 U.S.C. 1361–1407; 16 U.S.C. 1531–1544; 16 U.S.C. 4201–4245; Pub. L. 99–625, 100 Stat. 3500; unless otherwise noted.

2. In § 17.96(a), revise the entry for ''Family Polygonaceae: *Chorizanthe pungens* var. *pungens* (Monterey spineflower)'' to read as follows:

§ 17.96 Critical habitat—plants.

(a) *Flowering plants.*

* * * * *

Family Polygonaceae: *Chorizanthe pungens* var. *pungens* (Monterey spineflower)

(1) Critical habitat units are depicted for Santa Cruz and Monterey Counties, California, on the maps below.

(2) The primary constituent element of critical habitat for *Chorizanthe pungens* var. *pungens* is vegetation structure arranged in a mosaic with openings between the dominant elements (*e.g.*, scrub, shrub, oak trees, clumps of herbaceous vegetation) providing for sunlight on the following sandy soils: coastal beaches, dune land, Baywood sand, Ben Lomond sandy loam, Elder sandy loam, Oceano loamy sand, Arnold loamy sand, Santa Ynez fine sandy loam, Arnold—Santa Ynez complex, Metz complex, and Metz loamy sand.

(3) Critical habitat does not include manmade structures, such as buildings, aqueducts, airports, and roads, and the land on which such structures are located, existing on the effective date of this rule and not containing the primary constituent element.

(4) *Critical habitat map units.* Data layers defining map units were created on base maps using aerial imagery from the National Agricultural Imagery Program (aerial imagery captured June 2005). Data were projected to Universal Transverse Mercator (UTM) zone 11, North American Datum (NAD) 1983.

(5) Note: Index map (Map 1) follows:

BILLING CODE 4310–55–P

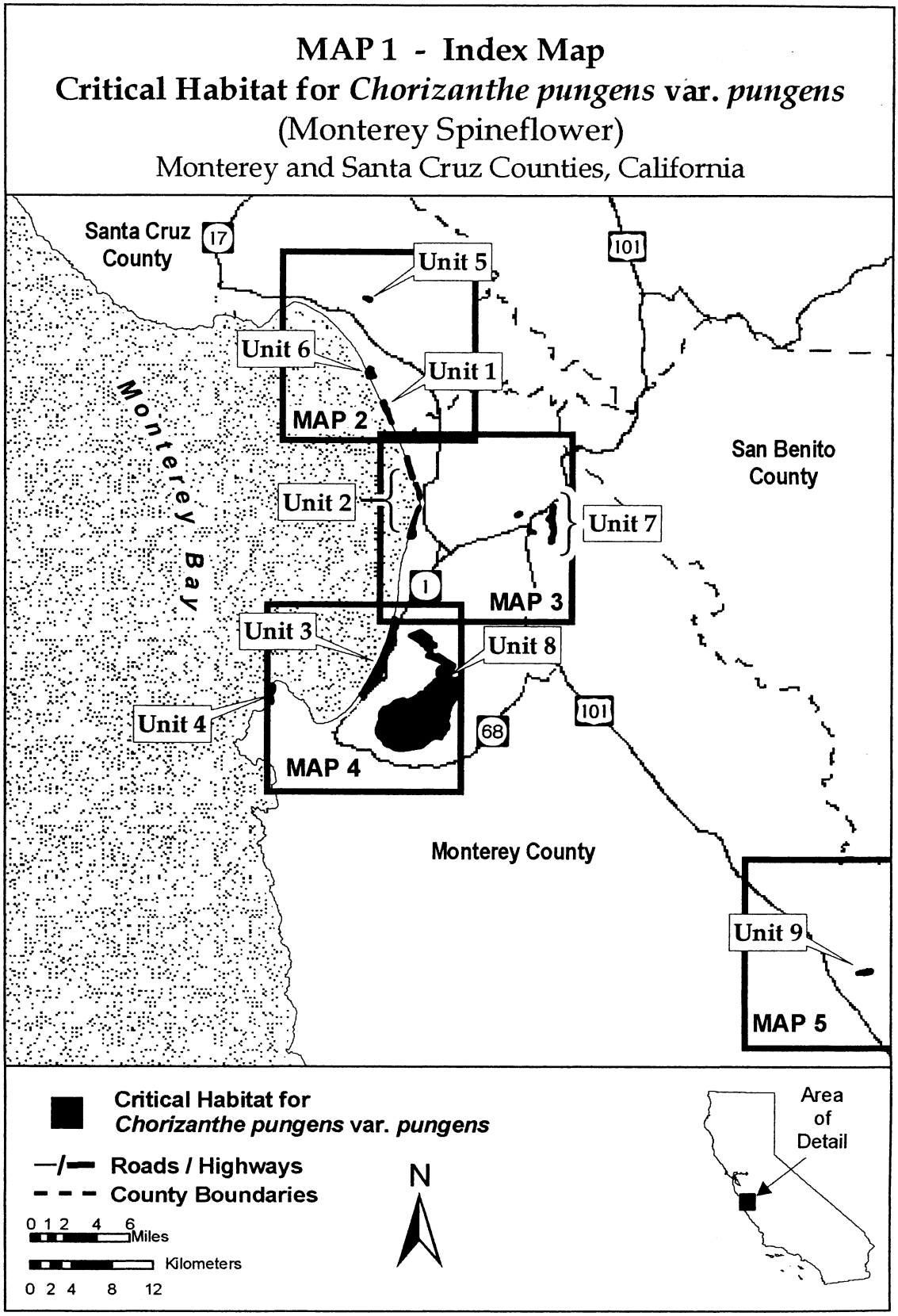
MAP 1 - Index Map
Critical Habitat for Chorizanthe pungens var. pungens
(Monterey Spineflower)
Monterey and Santa Cruz Counties, California
Santa Cruz County
17
101
Unit 5
Unit 6
Unit 1
MAP 2
Monterey Bay
San Benito County
Unit 2
Unit 7
1
MAP 3
Unit 3
Unit 8
Unit 4
68
101
MAP 4
Monterey County
Unit 9
MAP 5
Critical Habitat for Chorizanthe pungens var. pungens
Roads / Highways
County Boundaries
0 1 2 4 6 Miles
Kilometers
0 2 4 8 12
N
Area of Detail

(6) Unit 1: Sunset Unit, Santa Cruz County, California.

(i) From USGS 1:24,000 scale quadrangle Watsonville West. Land bounded by the following UTM zone 10 NAD83 coordinates (E, N): 603929, 4083699; 604051, 4083487; 604059, 4083449; 604045, 4083383; 604045, 4083351; 604091, 4083265; 604106, 4083164; 604122, 4083147; 604176, 4083117; 604222, 4083063; 604255, 4083022; 604279, 4083005; 604325, 4082960; 604349, 4082925; 604373, 4082842; 604412, 4082708; 604424, 4082671; 604426, 4082579; 604449, 4082515; 604460, 4082474; 604491, 4082428; 604504, 4082397; 604510, 4082350; 604527, 4082300; 604546, 4082248; 604535, 4082205; 604688, 4081900; 604847, 4081649; 604743, 4081648; 604613, 4081903; 604338, 4082450; 604205, 4082695; 604132, 4082828; 603987, 4083070; 603703, 4083577; returning to 603929, 4083699.

(ii) Note: Map of Units 1, 5, and 6 (Map 2) follows:

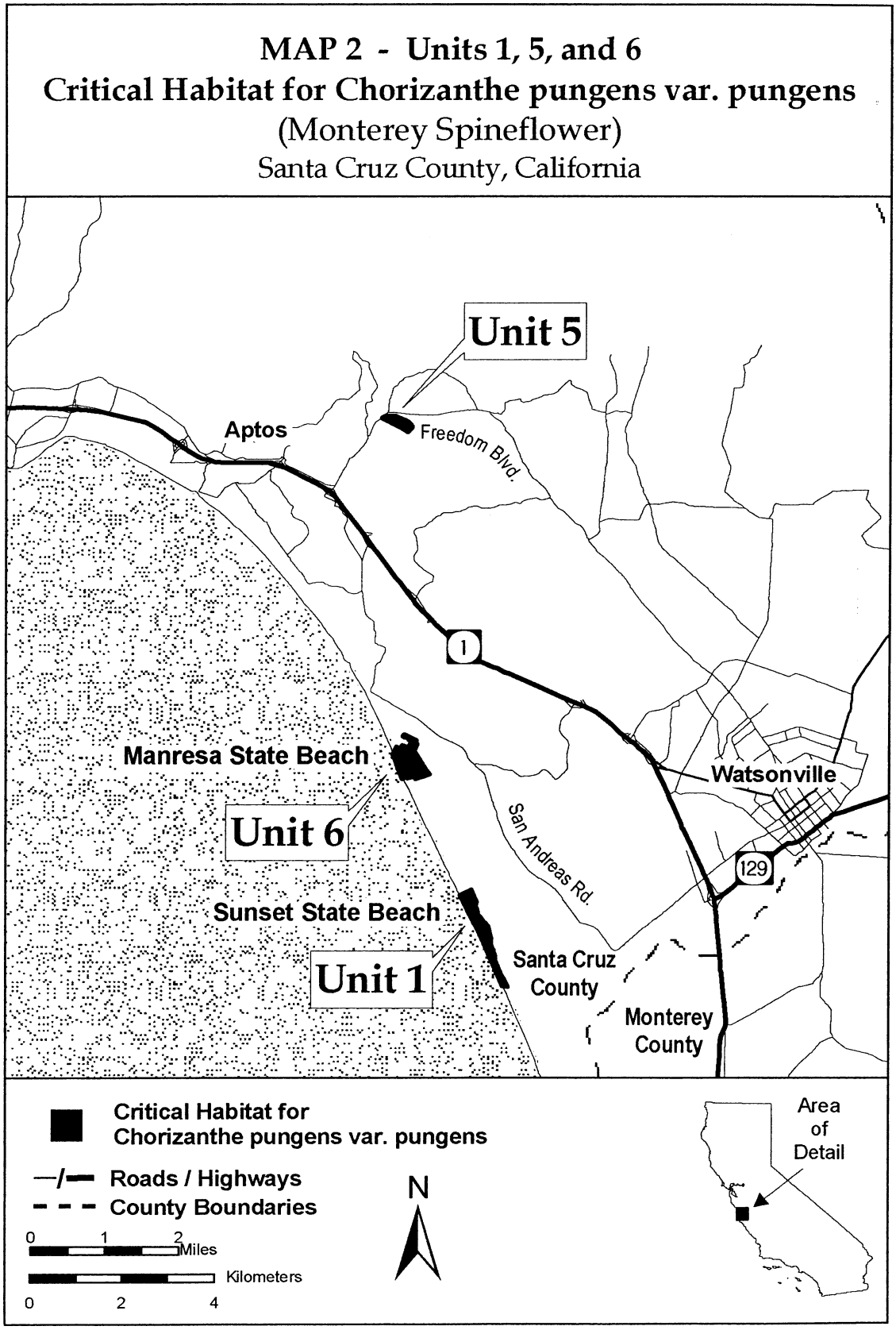

BILLING CODE 4310–55–C

(7) Unit 2: Moss Landing Unit, Monterey County, California.

(i) From USGS 1:24,000 scale quadrangle Moss Landing. Land bounded by the following UTM zone 10 NAD83 coordinates (E, N): 607507, 4075612; 607621, 4075684; 607654, 4075633; 607631, 4075619; 607636, 4075576; 607597, 4075556; 607690, 4075440; 607823, 4075301; 607910, 4075107; 607947, 4074934; 607954, 4074719; 608021, 4074544; 608058, 4074335; 607999, 4074277; 607936, 4074603; 607872, 4074869; 607801, 4075108; 607725, 4075268; 607599, 4075459; returning to 607507, 4075612.

(ii) From USGS 1:24,000 scale quadrangle Moss Landing. Land bounded by the following UTM zone 10 NAD83 coordinates (E, N): 607903, 4073162; 608016, 4073442; 608084, 4073399; 607962, 4073136; returning to 607903, 4073162.

(iii) From USGS 1:24,000 scale quadrangle Moss Landing. Land bounded by the following UTM zone 10 NAD83 coordinates (E, N): 607228, 4070373; 607310, 4070736; 607328, 4070904; 607348, 4071016; 607384, 4071156; 607514, 4071712; 607717, 4072508; 607772, 4072783; 607853, 4073038; 607914, 4073020; 607895, 4072915; 607865, 4072861; 607783, 4072474; 607787, 4072361; 607718, 4072182; 607621, 4071731; 607609, 4071579; 607619, 4071527; 607625, 4071342; 607616, 4071320; 607621, 4071220; 607596, 4071153; 607592, 4071096; 607570, 4071047; 607576, 4071014; 607648, 4070995; 607689, 4070941; 607666, 4070915; 607668, 4070868; 607631, 4070839; 607679, 4070781; 607677, 4070715; 607710, 4070665; 607739, 4070545; 607696, 4070507; 607689, 4070486; 607670, 4070465; 607654, 4070436; 607649, 4070398; 607502, 4070309; 607230, 4070348; returning to 607228, 4070373.

(iv) From USGS 1:24,000 scale quadrangle Moss Landing. Land bounded by the following UTM zone 10 NAD83 coordinates (E, N): 606454, 4078187; 606601, 4078347; 606679, 4078021; 606792, 4077578; 606824, 4077463; 606863, 4077367; 606841, 4077344; 606846, 4077325; 606856, 4077319; 606883, 4077322; 606936, 4077244; 607001, 4076989; 607221, 4076534; 607207, 4076523; 607206, 4076512; 607216, 4076487; 607238, 4076472; 607272, 4076417; 607272, 4076386; 607298, 4076371; 607309, 4076358; 607302, 4076347; 607281, 4076295; 607281, 4076279; 607170, 4076277; 607008, 4076687; 606805, 4077227; 606661, 4077584; 606561, 4077910; returning to 606454, 4078187.

(v) Note: Map of Units 2 and 7 (Map 3) follows:

BILLING CODE 4310–55–P

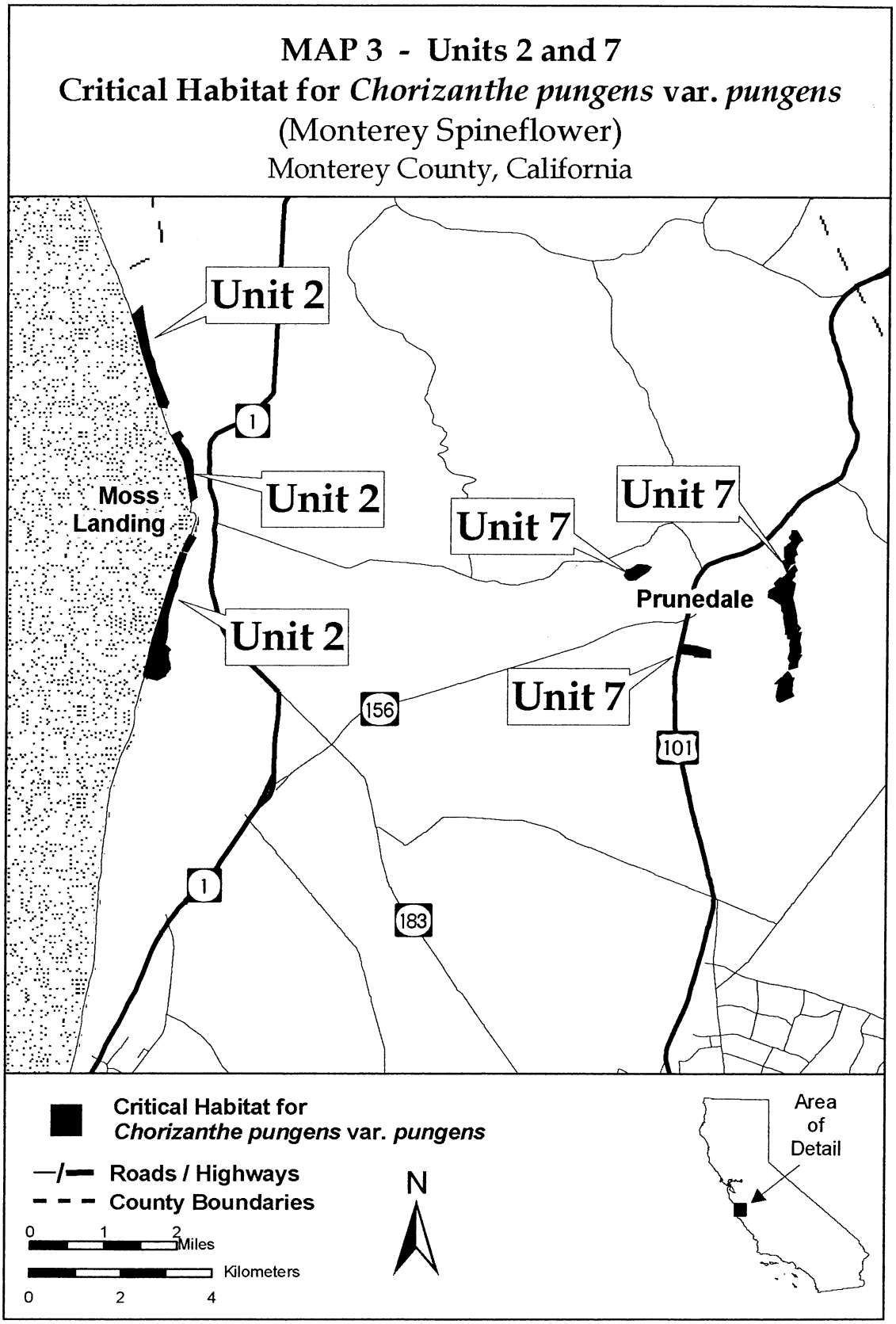

BILLING CODE 4310–55–C

(8) Unit 3: Marina Unit, Monterey County, California.

(i) From USGS 1:24,000 scale quadrangle Marina. Land bounded by the following UTM zone 10 NAD83 coordinates (E, N): 603550, 4054338; 603691, 4054583; 603944, 4055018; 604173, 4055496; 604429, 4056021; 604819, 4056877; 605042, 4057450; 605354, 4058252; 605565, 4058848; 605837, 4059750; 605918, 4060031; 606155, 4061060; 606282, 4061745; 606320, 4062114; 606653, 4061944; 606642, 4061777; 606595, 4061605; 606497, 4061365; 606456, 4061248; 606413, 4061089; 606388, 4060903; 606384, 4060755; 606390, 4060633; 606431, 4060406; 606349, 4060385; 606398, 4060148; 606370, 4060069; 606443, 4060021; 606446, 4059958; 606490, 4059933; 606225, 4059382; 606099, 4059154; 605974, 4058942; 605942, 4058878; 605861, 4058673; 605779, 4058394; 605739, 4058410; 605709, 4058346; 605679, 4058361; 605597, 4058304; 605587, 4058210; 605728, 4058160; 605683, 4058028; 605674, 4057900; 605681, 4057671; 605667, 4057538; 605662, 4057406; 605671, 4057317; 605690, 4057220; 605712, 4057147; 605763, 4057024; 605756, 4056939; 605731, 4056910; 605457, 4056766; 605429, 4056741; 605335, 4056560; 605360, 4056447; 605356, 4056395; 605232, 4056155; 605212, 4056093; 604940, 4055894; 604498, 4055349; 604397, 4055203; 604345, 4055087; 604323, 4055018; 604254, 4054897; 604077, 4054661; 604008, 4054566; 603934, 4054465; 603914, 4054402; 603758, 4054196; 603755, 4054189; 603737, 4054200; 603550, 4054338; 604416, 4055878; 604427, 4055852; 604451, 4055848; 604497, 4055868; 604526, 4055905; 604560, 4055938; 604613, 4055965; 604651, 4056003; 604699, 4056069; 604731, 4056138; 604736, 4056182; 604732, 4056242; 604726, 4056273; 604709, 4056296; 604675, 4056304; 604634, 4056288; 604613, 4056256; 604609, 4056220; 604632, 4056186; 604631, 4056167; 604605, 4056141; 604599, 4056122; 604602, 4056098; 604599, 4056084; 604568, 4056084; 604524, 4056092; 604513, 4056083; 604512, 4056070; 604528, 4056015; 604522, 4056001; 604501, 4055983; 604475, 4055969; 604459, 4055945; 604456, 4055931; 604438, 4055912; 604416, 4055878.

(ii) Note: Map of Units 3, 4, and 8 (Map 4) follows:

BILLING CODE 4310–55–P

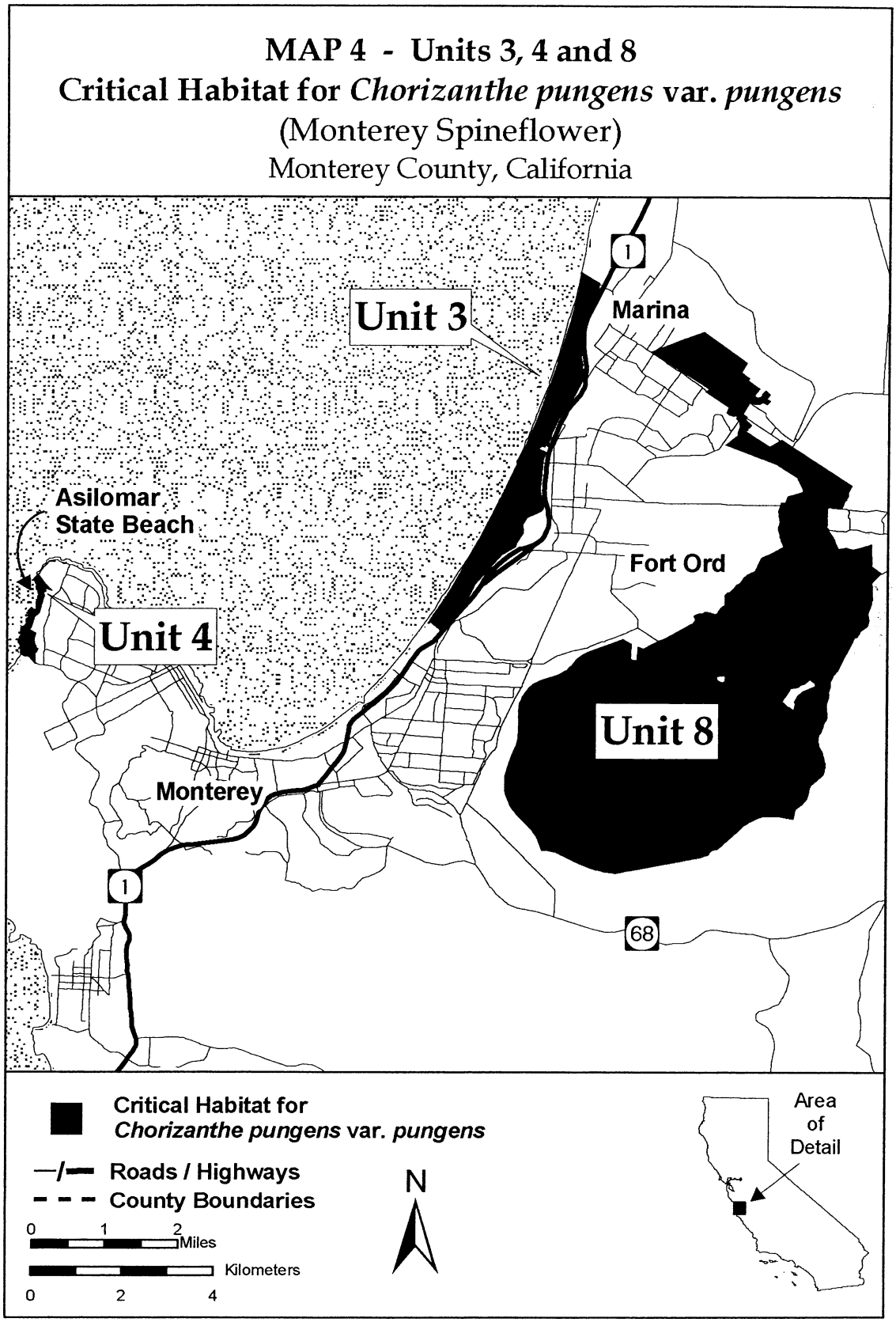

BILLING CODE 4310–55–C

(9) Unit 4: Asilomar Unit, Monterey County, California.

(i) From USGS 1:24,000 scale quadrangle Monterey. Land bounded by the following UTM zone 10 NAD83 coordinates (E, N): 594619, 4053296; 594619, 4053330; 594626, 4053369; 594643, 4053405; 594653, 4053431; 594654, 4053454; 594660, 4053514; 594648, 4053561; 594648, 4053583; 594655, 4053600; 594727, 4053636; 594734, 4053644; 594740, 4053671; 594751, 4053688; 594765, 4053700; 594763, 4053748; 594755, 4053773; 594750, 4053787; 594766, 4053795; 594788, 4053798; 594800, 4053805; 594811, 4053823; 594817, 4053849; 594813, 4053884; 594795, 4053906; 594779, 4053929; 594776, 4053948; 594778, 4053962; 594784, 4053976; 594798, 4054002; 594808, 4054006; 594824, 4054004; 594853, 4053992; 594880, 4053986; 594908, 4053991; 594929, 4054006; 594949, 4054037; 594950, 4054065; 594944, 4054114; 594952, 4054174; 594968, 4054190; 594979, 4054237; 594977, 4054292; 594972, 4054311; 595001, 4054351; 594980, 4054393; 594962, 4054440; 594960, 4054479; 594946, 4054509; 594969, 4054511; 594985, 4054509; 595008, 4054518; 595011, 4054528; 595025, 4054538; 595059, 4054529; 595052, 4054467; 595026, 4054447; 595013, 4054407; 595028, 4054355; 595028, 4054328; 595021, 4054284; 594958, 4054012; 594959, 4054012; 594943, 4053970; 594883, 4053919; 594857, 4053880; 594796, 4053673; 594782, 4053639; 594769, 4053626; 594713, 4053598; 594719, 4053582; 594888, 4053489; 594869, 4053373; 594896, 4053299; 594890, 4053268; 594927, 4053223; 594919, 4053193; 594957, 4053160; 594950, 4053123; 594886, 4053082; 594885, 4053056; 594923, 4053026; 594924, 4052940; 594906, 4052966; 594871, 4053005; 594832, 4053036; 594804, 4053053; 594726, 4053053; 594680, 4053081; 594680, 4053142; 594667, 4053173; 594651, 4053254; returning to 594619, 4053296.

(ii) From USGS 1:24,000 scale quadrangle Monterey. Land bounded by the following UTM zone 10 NAD83 coordinates (E, N): 594873, 4054693; 594913, 4054742; 595038, 4054606; 595057, 4054580; 595062, 4054561; 594921, 4054598; 594905, 4054625; returning to 594873, 4054693

(iii) Note: Map of Unit 4 is provided at paragraph (8)(ii) of this entry.

(10) Unit 5: Freedom Unit, Monterey County, California.

(i) From USGS 1:24,000 scale quadrangle Watsonville West. Land bounded by the following UTM zone 10 NAD83 coordinates (E, N): 601321.000 4093848; 601363, 4093878; 601484, 4093904; 601600, 4093907; 601710, 4093877; 601828, 4093833; 601921, 4093791; 601965, 4093746; 601983, 4093719; 601989, 4093682; 601905, 4093585; 601870, 4093613; 601487, 4093784; 601333, 4093837; returning to 601321, 4093848.

(ii) Note: Map of Unit 5 is provided at paragraph (6)(ii) of this entry.

(11) Unit 6: Manresa Unit, Monterey County, California.

(i) From USGS 1:24,000 scale quadrangle Watsonville West. Land bounded by the following UTM zone 10 NAD83 coordinates (E, N): 602044, 4086559; 602112, 4086716; 602197, 4086682; 602210, 4086694; 602221, 4086722; 602232, 4086754; 602285, 4086738; 602326, 4086722; 602374, 4086749; 602431, 4086877; 602376, 4086900; 602383, 4086914; 602296, 4086951; 602289, 4086937; 602236, 4086959; 602268, 4086998; 602524, 4086894; 602501, 4086838; 602557, 4086814; 602494, 4086665; 602763, 4086296; 602864, 4086162; 602562, 4086054; 602541, 4086096; 602394, 4086067; 602378, 4086099; 602302, 4086085; 602318, 4086053; 602275, 4086044; 602210, 4086186; 602139, 4086348; 602115, 4086409; returning to 602044, 4086559.

(ii) Note: Map of Unit 6 is provided at paragraph (6)(ii) of this entry.

(12) Unit 7: Prunedale Unit, Monterey County, California.

(i) From USGS 1:24,000 scale quadrangle Prunedale. Land bounded by the following UTM zone 10 NAD83 coordinates (E, N): 618887, 4071619; 618896, 4071742; 619145, 4071725; 619431, 4071664; 619441, 4071576; 619439, 4071574; 619169, 4071562; 619166, 4071601; returning to 618887, 4071619.

(ii) From USGS 1:24,000 scale quadrangle Prunedale. Land bounded by the following UTM zone 10 NAD83 coordinates (E, N): 621025, 4070792; 621080, 4071114; 621051, 4071111; 621085, 4071163; 621121, 4071173; 621136, 4071182; 621157, 4071219; 621160, 4071234; 621207, 4071274; 621233, 4071259; 621258, 4071205; 621283, 4071171; 621295, 4071168; 621290, 4071132; 621295, 4071048; 621284, 4070900; 621321, 4070847; 621314, 4070833; 621093, 4070705; 621046, 4070723; returning to 621025, 4070792.

(iii) From USGS 1:24,000 scale quadrangle Prunedale. Land bounded by the following UTM zone 10 NAD83 coordinates (E, N): 620707, 4073069; 620896, 4073161; 620837, 4073252; 620899, 4073326; 620937, 4073319; 621026, 4073386; 621107, 4073506; 621199, 4073608; 621206, 4073579; 621166, 4073526; 621173, 4073436; 621083, 4073322; 621197, 4073259; 621151, 4072949; 621158, 4072940; 621187, 4072867; 621278, 4072572; 621300, 4072385; 621364, 4072301; 621342, 4072258; 621328, 4072169; 621331, 4072151; 621353, 4072139; 621389, 4072155; 621377, 4072009; 621414, 4071899; 621422, 4071791; 621411, 4071786; 621361, 4071747; 621364, 4071718; 621377, 4071704; 621421, 4071702; 621385, 4071615; 621370, 4071533; 621379, 4071479; 621265, 4071449; 621256, 4071455; 621283, 4071501; 621288, 4071541; 621282, 4071565; 621230, 4071628; 621278, 4071792; 621255, 4071940; 621265, 4072089; 621192, 4072091; 621191, 4072183; 621130, 4072185; 621130, 4072300; 621085, 4072462; 621060, 4072649; 621031, 4072686; 621017, 4072730; 621009, 4072808; 620987, 4072831; 620927, 4072859; 620775, 4072954; 620739, 4072948; 620709, 4072962; returning to 620707, 4073069.

(iv) From USGS 1:24,000 scale quadrangle Prunedale. Land bounded by the following UTM zone 10 NAD83 coordinates (E, N): 620983, 4073724; 621027, 4073754; 620988, 4073922; 620997, 4073968; 620986, 4074025; 621101, 4074125; 621133, 4074174; 621144, 4074209; 621084, 4074270; 621123, 4074335; 621127, 4074380; 621146, 4074396; 621174, 4074395; 621273, 4074228; 621256, 4074215; 621206, 4074150; 621149, 4074028; 621163, 4073968; 621180, 4073920; 621159, 4073901; 621160, 4073898; 621124, 4073845; 621154, 4073750; 621074, 4073707; 621036, 4073609; returning to 620983, 4073724.

(v) Note: Map of Unit 7 is provided at paragraph (7)(v) of this entry.

(13) Unit 8: Fort Ord Unit, Monterey County, California.

(i) From USGS 1:24,000 scale quadrangle Marina. Land bounded by the following UTM zone 10 NAD83 coordinates (E, N): 609697, 4059326; 609722, 4059410; 610034, 4059231; 610010, 4059188; 610075, 4059114; 610137, 4059066; 610125, 4059051; 610114, 4059037; 610103, 4059024; 610091, 4059012; 610078, 4058998; 610065, 4058986; 609965, 4058895; 609958, 4058903; 609998, 4059020; 609962, 4059186; 609940, 4059175; 609906, 4059214; 609932, 4059260; 609797, 4059338; 609773, 4059296; 609709, 4059308; returning to 609697, 4059326.

(ii) From USGS 1:24,000 scale quadrangle Marina. Land bounded by the following UTM zone 10 NAD83 coordinates (E, N): 610192, 4059594; 610236, 4059663; 610258, 4059655; 610274, 4059651; 610309, 4059651;

610379, 4059665; 610390, 4059664; 610433, 4059733; 610443, 4059751; 610466, 4059785; 610502, 4059762; 610434, 4059652; 610504, 4059609; 610493, 4059592; 610463, 4059611; 610444, 4059619; 610420, 4059623; 610397, 4059620; 610355, 4059601; 610331, 4059591; 610295, 4059584; 610267, 4059581; 610240, 4059582; 610211, 4059588; returning to 610192, 4059594.

(iii) From USGS 1:24,000 scale quadrangle Marina. Land bounded by the following UTM zone 10 NAD83 coordinates (E, N): 608008, 4060536; 609030, 4060994; 609030, 4060995; 609971, 4060407; 609846, 4060206; 610033, 4060089; 609999, 4060034; 610264, 4059868; 610164, 4059707; 610220, 4059673; 610168, 4059589; 610111, 4059623; 609932, 4059336; 609230, 4059739; 609322, 4059793; returning to 608008, 4060536.

(iv) From USGS 1:24,000 scale quadrangle Marina and Salinas. Land bounded by the following UTM zone 10 NAD83 coordinates (E, N): 609751, 4058616; 610060, 4058898; 610647, 4058564; 610667, 4058598; 610879, 4058745; 612436, 4057852; 612399, 4057799; 612384, 4057756; 612381, 4057739; 612387, 4057693; 612378, 4057650; 612361, 4057603; 612352, 4057589; 612317, 4057541; 612304, 4057508; 612294, 4057462; 612274, 4057395; 611971, 4057411; 611159, 4057399; 611101, 4057397; 611145, 4057519; 611450, 4057629; 611480, 4057720; 611321, 4058012; 610816, 4058291; returning to 609751, 4058616.

(v) From USGS 1:24,000 scale quadrangle Marina, Salinas, Seaside, and Spreckles. Land bounded by the following UTM zone 10 NAD83 coordinates (E, N): 605408, 4050946; 605410, 4051017; 605417, 4051087; 605436, 4051191; 605522, 4051488; 605602, 4051720; 605630, 4051830; 605627, 4052006; 605600, 4052419; 605601, 4052501; 605607, 4052559; 605617, 4052617; 605630, 4052674; 605647, 4052729; 605669, 4052784; 605755, 4052925; 605799, 4052980; 605821, 4053004; 605890, 4053067; 605951, 4053108; 606007, 4053137; 606408, 4053300; 606490, 4053347; 606545, 4053384; 606598, 4053428; 606636, 4053464; 606689, 4053526; 606767, 4053639; 606817, 4053698; 606874, 4053750; 606918, 4053782; 606950, 4053802; 607005, 4053831; 607729, 4054151; 607873, 4054074; 607886, 4053775; 607904, 4053747; 607933, 4053729; 607986, 4053722; 608063, 4053728; 608098, 4053744; 608110, 4053762; 608102, 4053961; 608113, 4054001; 608182, 4053964; 608546, 4054184; 608601, 4054203; 609141, 4054548; 609160, 4054556; 609231, 4054598; 609258, 4054621; 609310, 4054704; 609315, 4054723; 609316, 4054750; 609309, 4054768; 609291, 4054789; 609315, 4054806; 609366, 4054824; 609440, 4054835; 609459, 4054850; 609477, 4054868; 609493, 4054873; 609569, 4054861; 609611, 4054845; 609698, 4054839; 609757, 4054849; 609772, 4054857; 609817, 4054936; 609820, 4054959; 609841, 4054989; 609907, 4055031; 609927, 4055053; 609944, 4055100; 609947, 4055132; 609927, 4055254; 609934, 4055294; 609967, 4055327; 610020, 4055349; 610057, 4055378; 610164, 4055520; 610209, 4055546; 610237, 4055571; 610306, 4055681; 610387, 4055754; 610520, 4055833; 610554, 4055869; 610574, 4055904; 610643, 4056127; 610658, 4056143; 610901, 4056274; 611153, 4056431; 611104, 4056509; 611091, 4056560; 611069, 4056592; 611046, 4056645; 611025, 4056671; 611033, 4056696; 611031, 4056719; 611006, 4056762; 611005, 4056778; 610992, 4056821; 610993, 4056878; 611001, 4056895; 611011, 4057000; 610986, 4057080; 610970, 4057224; 611012, 4057361; 611950, 4057379; 611958, 4057200; 611948, 4057203; 611937, 4057200; 611926, 4057191; 611923, 4057178; 611938, 4057146; 611938, 4057138; 611942, 4057138; 611962, 4057097; 611970, 4056892; 611990, 4056882; 612022, 4056833; 612154, 4056656; 612173, 4056586; 612270, 4056432; 612342, 4056434; 612478, 4056464; 612526, 4056458; 612566, 4056441; 612640, 4056444; 612759, 4056485; 612970, 4056560; 613013, 4056113; 613193, 4055994; 613060, 4055849; 613038, 4055818; 613033, 4055786; 613060, 4055413; 613060, 4055373; 613052, 4055334; 612998, 4055174; 612988, 4055121; 612992, 4055065; 613011, 4054974; 613013, 4054937; 613005, 4054877; 612986, 4054850; 612887, 4054762; 612866, 4054738; 612847, 4054706; 612833, 4054662; 612818, 4054637; 612799, 4054618; 612755, 4054589; 612743, 4054577; 612721, 4054544; 612693, 4054453; 612476, 4053952; 612446, 4053881; 612426, 4053845; 612349, 4053748; 612332, 4053721; 612319, 4053691; 612303, 4053631; 612267, 4053559; 612265, 4053541; 612273, 4053470; 612274, 4053433; 612270, 4053404; 612250, 4053323; 612251, 4053272; 612255, 4053218; 612238, 4053128; 612226, 4053030; 612228, 4052996; 612255, 4052840; 612255, 4052818; 612248, 4052779; 612235, 4052738; 612193, 4052664; 612188, 4052579; 612167, 4052495; 612147, 4052453; 612110, 4052400; 612097, 4052366; 612092, 4052334; 612092, 4052274; 612096, 4052244; 612113, 4052172; 612125, 4052134; 612203, 4051986; 612236, 4051914; 612248, 4051881; 612275, 4051794; 612283, 4051759; 612291, 4051699; 612281, 4051639; 612261, 4051561; 612247, 4051534; 612118, 4051387; 612023, 4051304; 612002, 4051275; 611994, 4051260; 611987, 4051235; 611979, 4051157; 611957, 4051054; 611948, 4051022; 611934, 4050984; 611908, 4050937; 611867, 4050885; 611722, 4050757; 611702, 4050737; 611694, 4050705; 611676, 4050543; 611484, 4050568; 611399, 4050574; 611259, 4050574; 611146, 4050565; 611042, 4050551; 610945, 4050516; 610871, 4050482; 610784, 4050434; 610732, 4050403; 610678, 4050363; 610617, 4050313; 610545, 4050241; 610074, 4049765; 610039, 4049758; 609981, 4049733; 609937, 4049701; 609889, 4049652; 609877, 4049618; 609814, 4049590; 609730, 4049564; 607897, 4049093; 607832, 4049096; 607676, 4049111; 607570, 4049128; 607487, 4049145; 607378, 4049173; 607306, 4049194; 607130, 4049259; 606738, 4049427; 606676, 4049452; 606613, 4049473; 606531, 4049492; 606449, 4049505; 606382, 4049509; 606308, 4049509; 606215, 4049712; 606173, 4049789; 606127, 4049854; 606067, 4049919; 606019, 4049966; 605756, 4050195; 605696, 4050251; 605658, 4050292; 605623, 4050334; 605590, 4050379; 605560, 4050424; 605532, 4050472; 605496, 4050546; 605465, 4050623; 605448, 4050675; 605428, 4050755; 605417, 4050824; 605412, 4050864; returning to 605408, 4050946. Excluding: 609791, 4053559; 609792, 4053420; 609833, 4053395; 609908, 4053357; 610068, 4053380; 610032, 4053598; returning to 609791, 4053559. Excluding: 611172, 4052992; 611242, 4052923; 611314, 4052987; 611402, 4052913; 611442, 4052907; 611524, 4052850; 611543, 4052844; 611587, 4052866; 611607, 4052919; 611628, 4053042; 611618, 4053074; 611670, 4053189; 611761, 4053277; 612029, 4053402; 612049, 4053521; 611863, 4053644; 611727, 4053518; 611656, 4053497; 611611, 4053451; 611535, 4053431; 611438, 4053400; 611394, 4053341; 611346, 4053238; 611278, 4053122; 611230, 4053068; returning to 611172, 4052992. Excluding: 611476, 4056579; 611418, 4056559; 611437, 4056500; 611496, 4056520; returning to 611476, 4056579.

(vi) Note: Map of Unit 8 is provided at paragraph (8)(ii) of this entry.

(14) Unit 9: Soledad Unit, Monterey County, California.

(i) From USGS 1:24,000 scale quadrangle Soledad. Land bounded by the following UTM zone 10 NAD83

coordinates (E, N): 653941, 4029661; 654080, 4029718; 654098, 4029754; 654158, 4029789; 654279, 4029808; 654372, 4029801; 654425, 4029812; 654458, 4029845; 654505, 4029873; 654619, 4029910; 654705, 4029898; 654777, 4029915; 654821, 4029942; 654865, 4029970; 654930, 4029989; 655223, 4030005; 655305, 4030020; 655374, 4029973; 655318, 4029807; 655195, 4029858; 655025, 4029760; 654944, 4029812; 654829, 4029774; 654735, 4029691; 654629, 4029678; 654495, 4029721; 654381, 4029731; 654318, 4029721; 654199, 4029687; 654123, 4029655; 653987, 4029654; returning to 653941, 4029661.

(ii) Note: Map of Unit 9 (Map 5) follows:

BILLING CODE 4310–55–P

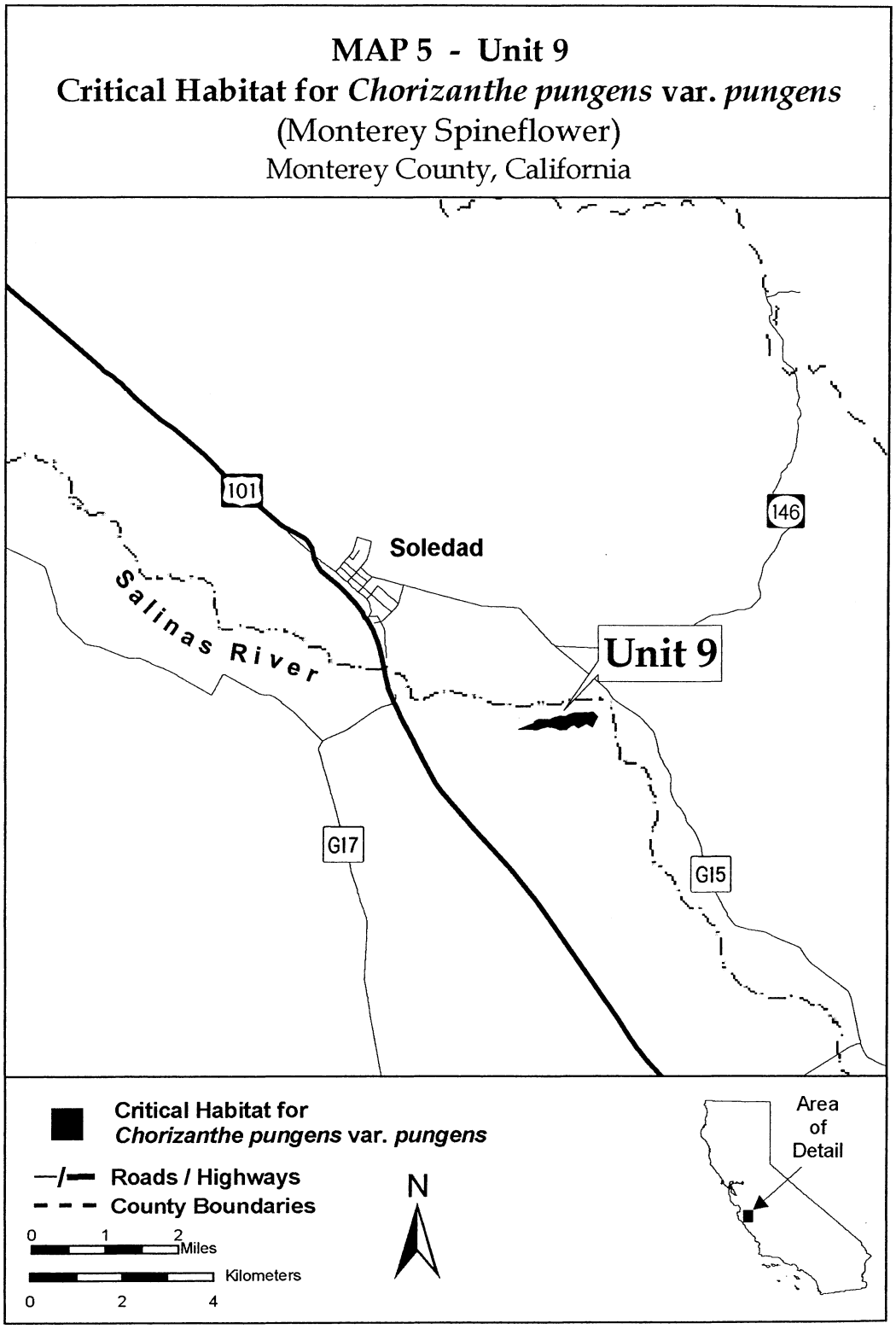
MAP 5 - Unit 9
Critical Habitat for *Chorizanthe pungens* var. *pungens*
(Monterey Spineflower)
Monterey County, California
101
146
Soledad
Salinas River
Unit 9
G17
G15
Critical Habitat for
Chorizanthe pungens var. *pungens*
Roads / Highways
County Boundaries
0 1 2 Miles
0 2 4 Kilometers
N
Area of Detail

* * * * *

Dated: December 6, 2006.

David M. Verhey,

Assistant Secretary for Fish and Wildlife and Parks.

[FR Doc. 06–9656 Filed 12–13–06; 8:45 am]

BILLING CODE 4310–55–C

DEPARTMENT OF THE INTERIOR

Fish and Wildlife Service

50 CFR Part 17

Endangered and Threatened Wildlife and Plants; 90-Day Finding on a Petition To Remove the Uinta Basin Hookless Cactus From the List of Endangered and Threatened Plants; 90-Day Finding on a Petition To List the Pariette Cactus as Threatened or Endangered

AGENCY: Fish and Wildlife Service, Interior.

ACTION: Notice of two 90-day petition findings and initiation of 5-year review.

SUMMARY: We, the U.S. Fish and Wildlife Service (Service), announce two 90-day findings made under the Endangered Species Act of 1973, as amended (Act). One finding concerns a petition to remove Uinta Basin hookless cactus (*Sclerocactus glaucus*) from the List of Endangered and Threatened Plants, and the other a petition to list Pariette cactus (*Sclerocactus brevispinus*) as a threatened or endangered plant. Until recently, these species were considered one taxonomic entity, so the petitions are being considered concurrently in this notice.

We find the petition to remove *Sclerocactus glaucus* from the List of Endangered and Threatened Plants does not present substantial information indicating that the petitioned action may be warranted, and we are not initiating a further status review in response to this petition. However, in order to determine the appropriate status of *S. glaucus* given recent taxonomic revisions to this species, we are initiating a 5-year review under section 4(c)(2)(A) of the Act. Through this action, we encourage all interested parties to provide us information regarding the status of, and any potential threats to, this species as it was originally listed (i.e., information pertaining to *S. glaucus, S. brevispinus,* and *S. wetlandicus*).

We find the petition to list *Sclerocactus brevispinus* presents substantial information indicating that the petitioned action may be warranted, and we are initiating a further status review in response to this petition. Through this action, we encourage all interested parties to provide us information regarding the status of, and any potential threats to, this species.

DATES: The findings announced in this document were made on December 14, 2006. Comments and information must be submitted on or before February 12, 2007.

ADDRESSES: If you wish to comment, you may submit your comments and materials by any one of the following methods:

(1) You may mail or hand-deliver written comments and information to Field Supervisor, Utah Ecological Services Office, U.S. Fish and Wildlife Service, 2369 West Orton Circle, Suite 50, West Valley City, Utah 84119.

(2) You may submit your comments by electronic mail (e-mail) to *fw6_sclerocactus@fws.gov.* For directions on how to submit comments by e-mail, see the ''Public Comments Solicited'' section of this notice. In the event that our Internet connection is not functional, please submit your comments by mail, hand-delivery, or fax.

(3) You may fax your comments to (801) 975–3331.

FOR FURTHER INFORMATION CONTACT: Larry England, U.S. Fish and Wildlife Service, 2369 West Orton Circle, Suite 50, West Valley City, Utah 84119 (telephone 801–975–3330; fax 801–975–3331; e-mail *larry_england@fws.gov*). Additional information is available at *http://mountain-prairie.fws.gov/species/plants/threecacti/index.htm.*

SUPPLEMENTARY INFORMATION:

Background

Section 4(b)(3)(A) of the Act (16 U.S.C. 1531 *et seq.*) requires that we make a finding on whether a petition to list, delist, or reclassify a species presents substantial scientific or commercial information to indicate that the petitioned action may be warranted. We are to base this finding on information provided in the petition, supporting information submitted with the petition, and information otherwise available in our files at the time we make the determination. To the maximum extent practicable, we are to make this finding within 90 days of our receipt of the petition, and publish our notice of this finding promptly in the **Federal Register**.

Our standard for substantial information with regard to a 90-day petition finding is ''that amount of information that would lead a reasonable person to believe that the measure proposed in the petition may be warranted'' (50 CFR 424.14(b)). If we find that substantial information was presented, we are required to promptly commence a status review of the species.

In making these findings, we relied on information provided by the petitioners and evaluated that information in accordance with 50 CFR 424.14(b). Our 90-day finding process under section 4(b)(3)(A) of the Act and section 424.14(b) of the regulations is limited to a determination of whether the information in the petition meets the ''substantial information'' threshold.

On October 11, 1979, we listed *Sclerocactus glaucus* as a threatened species (44 FR 58868) based on threats from overcollection for horticultural purposes, energy development (including oil, gas, and potential oil-shale development), grazing, off-road vehicle (ORV) use, and water development (44 FR 58869). A recovery plan for the species was finalized on September 27, 1990. Revisions in the taxonomy of *S. glaucus* began in 1989 (Hochstatter 1989, 1993; Heil and Porter 1994; Porter *et al.* 2000; Welsh *et al.* 2003), and by 2004, the Flora of North America recognized the plant *S. glaucus* that we listed in 1979 as three distinct species: *S. glaucus, S. wetlandicus,* and *S. brevispinus.*

In our February 28, 1996, Candidate Notice of Review (CNOR) (61 FR 7596), we included *Sclerocactus brevispinus* as a candidate species. Retraction of *S. brevispinus* as a candidate species occurred in our September 19, 1997, CNOR (62 FR 49401) with the following justification: ''Because *S. brevispinus* was a part of *S. glaucus* when the latter species was listed as threatened, those plants now referred to as *S. brevispinus* are still considered to be listed as threatened. Therefore, including *S. brevispinus* as a candidate in the 1996 notice of review was inappropriate and unnecessary. To address the recent change in taxonomy, a proposed rule to add *S. brevispinus* to the List of Endangered and Threatened Plants will be published in the **Federal Register** at a later time.''

On February 3, 1997, we received a petition from the National Wilderness Institute to remove *Sclerocactus glaucus* from the List of Endangered and Threatened Plants on the basis of ''original data error,'' but higher priority actions have precluded addressing this petition to date. On April 18, 2005, the Center for Native Ecosystems and the Utah Native Plant Society petitioned us to designate *S. brevispinus* as threatened or endangered and to designate critical habitat. On October 10, 2005, the same parties filed a complaint in the U.S.

District Court for the District of Colorado alleging that we were in violation of the Act because we had failed to complete a 90-day finding on their petition. In order to settle the case, we agreed to submit to the **Federal Register** a completed 90-day finding by December 8, 2006, and to complete, if applicable, a 12-month finding by September 14, 2007.

Species Information

Recent genetic studies (Porter *et al.* 2000, pp. 14, 16), common garden experiments (Hochstatter 1993, pp. 94, 98, 100; Welsh *et al.* 2003, p. 79), and a reevaluation of the morphological characteristics of *Sclerocactus glaucus* (Heil and Porter 2004, pp. 200–201; Hochstatter 1993, pp. 91, 95, 99) have led to a reclassification of this species. The recently published Flora of North America (Heil and Porter 2004, pp. 197–207) now recognizes 15 species in the genus *Sclerocactus,* including *S. glaucus, S. brevispinus,* and *S. wetlandicus,* which collectively were recognized as *S. glaucus* when the species was listed in 1979 (44 FR 58868). Of importance is the description of *S. wetlandicus* (Hochstatter 1993, pp. 91–92), which now comprises the bulk of the former *S. glaucus* range in Utah. The current *S. glaucus* species is endemic to western Colorado, and *S. brevispinus* (the third species formerly recognized as *S. glaucus*) is a morphologically unique species that occurs in the Pariette Draw drainage in the central Uinta Basin, Utah. This cactus is much smaller than either *S. wetlandicus* or *S. glaucus,* retaining the vegetative characteristics of juvenile *S. wetlandicus* individuals in adult flowering plants. In 1979, when the species was listed, these smaller individuals were thought to represent only ecotypic variations of *S. glaucus. S. brevispinus* has been named *S. wetlandicus* var. *ilseae* (Hochstatter 1993, pp. 95–97), *S. whipplei* var. *ilseae* (Welsh *et al.* 2003, p. 79), and *S. brevispinus* (Heil and Porter 1994, p. 26), but is referred to herein as *S. brevispinus.*

Our review of information presented in the petition to remove *Sclerocactus glaucus* from the List of Endangered and Threatened Plants is specific to the taxonomy of the species at the time of listing, which included *S. glaucus*, *S. wetlandicus*, and *S. brevispinus* as one species. We refer to these three species as the *S. glaucus* complex in our review of the information presented in that petition. Our review of the information presented in the petition to list *S. brevispinus* as threatened or endangered refers specifically to that species.

Sclerocactus glaucus and *Sclerocactus wetlandicus* are represented by small ball or barrel-shaped cacti usually with straight (i.e., hookless) central spines, solitary, ovoid to nearly globular succulent stems approximately 4 to 18 centimeters (cm) (1.5 to 7 inches (in.)) tall (exceptional plants 30 cm (12 in.) tall), and generally pinkish flowers. Flowering occurs from April to May and fruiting occurs from May to June. The fruit is barrel-shaped, 0.8 to 1.3 cm (0.3 to 0.5 in.) long, and about 0.8 cm (0.3 in.) in diameter.

Sclerocactus brevispinus has succulent unbranched stems usually 2.5 to 8 cm (1.0 to 3.1 in.) tall that vary from depressed spheric to shortened cylindrical in shape, and its flowers have a broad, brownish midstripe and pink to purple margins. The fruit is shortened, barrel-shaped, reddish or reddish grey when ripe, 0.7 to 1.2 cm (0.3 to 0.5 in.) wide, and 0.9 to 2.5 cm (0.4 to 1.0 in.) long. More complete species descriptions can be found in Heil and Porter (1994, pp. 25–27) and Hochstatter (1993, pp. 91, 95, and 99).

The currently known distribution of the three cactus species includes Federal, State, Tribal, and private lands in Uintah, Duchesne, and Carbon Counties, Utah, and in Mesa, Delta, Garfield, and Montrose Counties, Colorado. Eight populations were known to occur in a five-county area in western Colorado and eastern Utah when the species was listed in 1979 (44 FR 58869, October 11, 1979). Two small outlier populations near Gateway, Colorado, and Bonanza, Utah, have since been identified (Heil and Porter 1993, pp. 18–45; Colorado Natural Heritage Inventory (CNHI) 2006, pp. 2–3; Utah Natural Heritage Inventory (UNHI) 2006, pp. 2–3). Ninety percent of the total population of the three species occurs on Bureau of Land Management (BLM) lands, and the remaining 10 percent is located on State of Utah and private lands (44 FR 58869, October 11, 1979).

S. glaucus and *S. wetlandicus* are generally found on coarse soils derived from cobble and gravel river and stream terrace deposits, or rocky surfaces on mesa slopes at 1,350 to 1,900 meters (m) (4,400 to 6,200 feet (ft)) in elevation (Heil and Porter 1993, pp. 14–16; Heil and Porter 1994, pp. 25–26; Service 1990, p. 7; Rechel et al. 1999, p. 2). *S. brevispinus* grows on fine soils in clay badlands derived from the Uinta formation (Service 1990, p. 7).

Population estimates for the *three species* have been variously reported between approximately 4,872 and 10,000 individuals in Colorado, and 10,000 and 16,828 individuals in Utah (Heil and Porter 1993, pp. 29, 45; Service 1990, p. 4; CNHI 2006, p. 2; UNHI 2006). The population of *S. brevispinus* is currently estimated at 3,795 individuals (BLM 1985). Recovery criteria for *S. glaucus* (which includes all three cactus species) include a total population of 30,000 individuals in 6 separate populations of at least 2,000 individuals each with formal management designations protecting the habitat for at least 4 of these populations over the long term. To date these criteria have not been met.

Threats Analysis

Section 4 of the Act and its implementing regulations (50 CFR part 424) set forth procedures for adding species to, or removing species from, the Federal List of Endangered and Threatened Wildlife and Plants. A species may be determined to be an endangered or threatened species due to one or more of the five factors described in section 4(a)(1) of the Act: (A) Present or threatened destruction, modification, or curtailment of habitat or range; (B) overutilization for commercial, recreational, scientific, or educational purposes; (C) disease or predation; (D) inadequacy of existing regulatory mechanisms; or (E) other natural or manmade factors affecting its continued existence. In making our findings, we evaluated whether threats to the *Sclerocactus glaucus* complex, as they were presented in the National Wilderness Institute's petition, and in relation to other information available in our files at the time of the petition reviews, may pose a concern with respect to the species' survival. We further evaluate threats to *S. brevispinus* as presented in the petition filed by the Center for Native Ecosystems and the Utah Native Plant Society in a separate section following our finding on the *S. glaucus* complex.

Uinta Basin Hookless Cactus (the *Sclerocactus glaucus* complex)

The National Wilderness Institute's petition to remove the *Sclerocactus glaucus* complex from the Federal List of Endangered and Threatened Plants cited our December 1990 Report to Congress that stated, ''[P]opulation and habitat inventories have identified a greater abundance, range distribution, and additional populations of this species than originally known. Evaluation will be undertaken to consider delisting.'' The petition further states that ''information already in the possession of the USFWS demonstrates * * * [that] there is not a justifiable basis for inclusion of this plant'' on the List of Endangered and Threatened

Plants and suggests that we should delist the *S. glaucus* complex due to original data error. The petition provided no information about the status or threats to the species. Information in our files substantiates our description of the *S. glaucus* complex at the time of the listing in 1979. In addition, the threats identified in the 1979 listing rule remain relevant to this species complex. Therefore, the petition fails to present evidence to support the allegation of data error.

A. The Present or Threatened Destruction, Modification, or Curtailment of Its Habitat or Range

The petition did not provide any information or list any habitat-related threats to the *Sclerocactus glaucus* complex. Nor did it provide any information that the threats have been successfully addressed such that they are no longer affecting the status of the species. Neither did the petition provide any evidence that the species is recovered. Based on the petition and information available in our files for this factor, we find that the petition does not present substantial information indicating that the petitioned action may be warranted.

B. Overutilization for Commercial, Recreational, Scientific, or Educational Purposes

The petition did not provide any information or list any threats to the *Sclerocactus glaucus* complex from overutilization for commercial, recreational, scientific, or educational purposes. Nor did it provide any documentation that the species is no longer facing threats in this area. Based on the petition and information available in our files for this factor, we find that the petition does not present substantial information indicating that the petitioned action may be warranted.

C. Disease and Predation

The petition did not provide any information or list any threats to the *Sclerocactus glaucus* complex from disease or predation. Our final listing rule concluded that disease and predation were not factors impacting the extinction probability of the *S. glaucus* complex (44 FR 58869, October 11, 1979).

D. The Inadequacy of Existing Regulatory Mechanisms

The petition did not provide any information regarding the adequacy of regulatory mechanisms to protect the *S. glaucus* complex should it be delisted. We find that the petition does not present substantial information indicating that the petitioned action may be warranted.

E. Other Natural or Manmade Factors Affecting Its Continued Existence

The petition did not provide any information or list any threats to the *Sclerocactus glaucus* complex that may result from other natural or manmade factors. Our final listing rule did not identify any natural or manmade factors affecting the species other than those discussed above (44 FR 58869, October 11, 1979.

Finding

We have reviewed the information provided in the National Wilderness Institute's petition. The information was very sparse. The petition relied solely on a Service budget document from 1993 that listed the Uinta Basin hookless cactus as a candidate for delisting. After this review and evaluation, we find the petition does not present substantial scientific information to indicate that removing the *S. glaucus* complex from the Federal List of Endangered and Threatened Plants may be warranted at this time.

5-Year Review

Although we will not conduct a status review in response to the National Wilderness Institute's petition, we acknowledge that a review of the *Sclerocactus glaucus* complex *(S. glaucus, S. brevispinus*, and *S. wetlandicus)* is necessary at this time to address the taxonomic revisions that have occurred since the species was listed. As such, we are initiating a 5-year review of the *S. glaucus* complex under section 4(c)(2)(A) of the Act. Based on this 5-year review, we will determine whether or not any of the species included in the *Sclerocactus glaucus* complex should be removed from the list (*i.e.*, delisted) or otherwise reclassified. Delisting or reclassifying a species must be supported by the best scientific and commercial data available and we will only consider delisting a species if such data substantiate that the species is neither endangered nor threatened for one or more of the following reasons: (1) The species is considered extinct; (2) the species is considered to be recovered; or (3) the original data available when the species was listed, or the interpretation of such data, were in error. Any change in Federal classification would require a separate rulemaking process.

Our regulations at 50 CFR 424.21 require that we publish a notice in the **Federal Register** announcing those species currently under review. This notice announces our intention to prepare a 5-year review of the *Sclerocactus glaucus* complex and opening of a 60-day comment period (see **DATES**). We encourage interested parties to provide comments on any or all of the species included in the *S. glaucus* complex *(S. glaucus*, *S. brevispinus*, and *S. wetlandicus*) to the Field Supervisor, Utah Ecological Services Office (see **ADDRESSES**).

Pariette Cactus (*Sclerocactus brevispinus*)

The Center for Native Ecosystems' petition provided a summary of the distribution, status, and trends of *Sclerocactus brevispinus* and cited limited distribution, minimal monitoring, negative population trends, impacts to pollinators, drought, and habitat disturbance as examples of threats affecting the species. The petition described *S. brevispinus* as ''a narrow endemic occurring in a series of small scattered populations in badlands near Myton, Utah'' (Heil and Porter 1994, p. 26) occupying an area approximately 16 kilometers (km) (10 miles (mi)) long and 5 km (3 mi) wide astride the Duchesne and Uintah County line. The petition identified a population size of 3,795 individuals in 1985 (BLM 1985, p. 4; Heil and Porter 1995, p. 45). Long-term or recent status or trend data for *S. brevispinus* was not provided.

A. The Present or Threatened Destruction, Modification, or Curtailment of Its Habitat or Range

The petition asserted that ongoing oil and gas development threatens the species. According to the petition, over 90 percent of the species' habitat occurs in active oil and gas fields, and *Sclerocactus brevispinus* individuals and habitat have been lost to oil and gas development. The petition provides examples of habitat and individual plant loss by citing the BLM Draft Environmental Impact Statement (EIS) for the Castle Peak/Eightmile Flat project (BLM 2004, pp. 4.1–4.26), including the complete loss of 172.4 hectares (ha) (462 acres (ac)) of occupied *S. brevispinus* habitat (5.6 percent of total suitable habitat) and 926 ha (2,288 ac) of unsurveyed potential suitable habitat (30 percent of total suitable habitat) to date.

The Service now has the Final EIS for the Castle Peak/Eightmile Flat project in our files (BLM 2005a). The following discussion results from our analysis of information in the Final EIS and global information system (GIS) data (Service 2006) where it corresponds to Draft EIS information identified in the petition.

The total range of *Sclerocactus brevispinus* comprises approximately 5,733 ha (14,166 ac) (Service 2006) within which suitable habitat is scattered in naturally occurring mosaics (BLM 2005b, pp. 3–30). Of the species' total range, 91 percent (5,209 ha/12,871 ac) occurs within the approved Castle Peak/Eightmile Flat project area and the pending Gasco Uinta Basin Natural Gas Field Development project (Service 2006; 71 FR 7059, Feburary 10, 2006). The remaining 848 ha (2,095 ac) of *S. brevispinus*' range contains wells drilled in the Sand Wash and Greater Boundary Units (Service 2006). The BLM administers 4,649 ha (11,488 ac) (81 percent) of the species' range (Service 2006). Expansion of the Castle Peak/Eightmile Flat oil and gas field overlaps much of the remaining suitable habitat for *S. brevispinus* by doubling the number of wells and the amount of surface disturbance in cactus habitat (BLM 2005a, pp. 4.2–4.14). The analysis in the BLM Biological Assessment (BLM 2005b, pp. 3–31) assumed 6,659 ha (16,454 ac) of potential suitable *S. brevispinus* habitat would be affected.

For the purpose of evaluating information presented in the petition, we reviewed GIS data of known well activity within the range of *Sclerocactus brevispinus* (Utah 2006; Service 2006). That information shows that all known *S. brevispinus* individuals are within 300 m (984 ft) of a well, and 96 percent of the species' range is within 400 m (1,312 ft) of a well. Additional wells and facilities are anticipated based on pending oil and gas development projects.

The petition notes that indirect effects to *Sclerocactus brevispinus* from these development activities include soil compaction, increased road access, increased ORV use, increased surface disturbance, and habitat fragmentation (BLM 2005b, pp. 3–35; BLM 2005a, pp. 5–18). Increased road access can result in increased illegal collection of the species, resulting in direct loss of individual plants (BLM 2005b, pp. 3–35). Roads also increase sediment deposition on cacti, which has been documented to result in the mortality of mature plants (BLM 2004, pp. 4.1–4.28; BLM 2005b, pp. 3–36), and increase habitat fragmentation (BLM 2005b, pp. 3–34 to 3–35). As well field road density increases within cactus habitat areas, cactus populations become more physically isolated from each other (BLM 2005b, pp. 3–36).

Increased ORV use would likely result in crushing of cacti, and increased erosion, soil compaction, and sedimentation (BLM 2005b, pp. 3–35). Increased surface disturbance from wells, pipelines, and roads would facilitate proliferation of noxious weeds (BLM 2005a, pp. 5–18). Noxious weeds can negatively change the ecological characteristics of hookless cactus habitat (BLM 2005b, pp. 3–35).

Rehabilitation of soils and vegetation following surface disturbance is expected to be difficult; approximately 73 percent of soils in the Castle Peak/Eightmile Flat project area have moderate to high re-vegetation constraints (BLM 2005a, pp. 4.2–4.11). The Castle Peak/Eightmile Flat project EIS (BLM 2005a, pp. 4.2–4.12, 4.3–4.7) estimates that successful re-vegetation would be expected to occur over the long term (up to 50 years) in desert shrub and sagebrush communities. Drought conditions could further extend the recovery period, and noxious weeds would persist regardless of control efforts (BLM 2005a, pp. 4.3–4.7).

Conservation measures are developed and implemented for oil and gas projects to minimize effects to *Sclerocactus brevispinus* by surveying for, and avoiding or minimizing the loss of, individual cacti (BLM 2005a, pp. 2–23). These measures include preconstruction cactus surveys and application of avoidance buffers. For example, BLM administers the 4,719 ha (11,660 ac) Pariette Wetlands Area of Critical Environmental Concern (ACEC), which emphasizes protection of *S. brevispinus*. Approximately 1,450 ha (3,584 ac) of the ACEC occur within the range of *S. brevispinus*. The EIS Record of Decision defers approval of new wells and ancillary facilities located on BLM-administered land within the Pariette Wetlands ACEC until a comprehensive population survey has been completed for *S. brevispinus*; however, it does not preclude long-term development (70 FR 61301, October 21, 2005). Citing valid existing lease rights, and current management prescriptions included in the Diamond Mountain Resource Management Plan, the EIS Record of Decision did not stipulate a blanket ''no surface occupancy'' requirement for oil and gas development within the Pariette Wetlands ACEC or within the range of *S. brevispinus* (BLM 2005a, p. 5). Following cactus surveys, development could occur within the ACEC. Regardless of conservation efforts, adverse indirect effects are still expected due to the loss and fragmentation of suitable habitat (BLM 2005a, pp. 5–18; BLM 2005b, pp. 3–35).

The petition questioned the adequacy of available monitoring to evaluate population status or threats. Information in Service files indicates that BLM has initiated monitoring of *Sclerocactus brevispinus* populations, including monitoring of impacts associated with oil and gas development. Results are preliminary, given that the study was initiated in 2005. However, initial results show potential impacts from oil and gas development (*e.g.*, roads, well pads) to the survival and reproduction success of *S. brevispinus* (Ulloa 2006). For example, in 2005 monitoring, survival of *S. brevispinus* in plots impacted by roads associated with energy development was 17 percent compared to 47 percent survival for plots not associated with roads. Twenty-two percent of cacti successfully reproduced on plots not impacted by roads while 13.8 percent reproduced at plots adjacent to roads. More information is needed to determine if these effects are the result of energy development or other environmental factors (Ulloa 2006).

The petition states that continued infilling of additional oil and gas wells and supporting road and pipeline facilities will further impact the species' population. We have documented the direct loss of *S. brevispinus* individuals to oil field development activities including mechanical disturbance of occupied habitat with the loss of individual plants and sedimentation from roads and well pads burying other individuals. These losses have occurred despite conservation efforts implemented by BLM and the oil field operator (Newfield, Inc.). The proximity of the species occupied habitat and oil field development features to each other requires an ongoing vigilant effort by the BLM and the oilfield operators to conserve this species.

We have no information in our files that contradicts the assertions made in the petition for this factor; information supports the petitioner's claims. As the petition demonstrates, energy development is occurring in *Sclerocactus brevispinus* habitat at a rate much greater than existed at the time of the original *S. glaucus* complex listing in 1979. Therefore, we find that the petition, supporting information, and information readily available in our files for this factor, presents substantial information indicating that the petitioned action may be warranted.

B. Overutilization for Commercial, Recreational, Scientific, or Educational Purposes

The petition references our original listing rule for the *Sclerocactus glaucus* complex, which stated that ''the cactus * * * has been and will continue to be a particular prize among collectors and therefore is very threatened by unregulated commercial trade'' (44 FR 58868, October 11, 1979). The petition

further supports this claim by providing information regarding illegal collecting from Welsh (2004), Heil and Porter (1999), and BLM (2004). In addition, the Castle Peak/Eightmile Flat EIS, as noted in the petition, recognizes that additional energy development and ensuing road development would result in increased potential for illegal collecting (BLM 2005a, pp. 4.1–4.26).

We have information in our files that verifies the assertions made in the petition for this factor. As the petition demonstrates, illegal collecting continues to occur and may increase as new roads are developed to support energy projects. Therefore, we find that the petition, supporting information, and information readily available in our files for this factor, presents substantial information indicating that the petitioned action may be warranted.

C. Disease or Predation

The petition identifies parasitism by what appeared to be a grub infestation in one study plot of a larger monitoring effort and referenced a 1990 Service report that stated that ''termite and beetle larvae have been observed to parasitize the roots and stems of *Sclerocactus glaucus*.'' However, information provided in the petition is not conclusive, and the significance of parasitism on the species' survival is not known.

The petition also suggests that predation may affect *Sclerocactus brevispinus*, but it also recognizes that there is no information to indicate the extent of the possible effects. Based on the information presented in the petition and available in our files for this factor, we find that the petition does not present substantial information indicating that the petitioned action may be warranted based on this factor alone.

D. The Inadequacy of Existing Regulatory Mechanisms

The petition states that *Sclerocactus brevispinus* is not adequately protected by the *S. glaucus* complex listing, that BLM regulations do not adequately protect the species, and that there are no State regulations that apply. Regarding protections provided by the *S. glaucus* complex listing, the petition states that *S. brevispinus* is not adequately protected because evaluation of effects to *S. brevispinus*, developed through interagency consultations under section 7 of the Act, are muted by the fact that this species is listed as part of a much larger taxonomic entity. The petition concludes that if *S. brevispinus* were listed as its own species, in accordance with current taxonomic understanding, then effects of proposed actions would be evaluated at a more appropriate scale. For example, if a project impacts 3,500 plants (last population count for *S. brevispinus;* Nitschke-Sinclair 1985, p. 3) out of a total 10,000 plants (*i.e.*, the *S. glaucus* complex as currently listed; 44 FR 58869, October 11, 1979), that project impacts 30 percent of the total population. However, if the same project occurs entirely within *S. brevispinus* habitat, it would impact almost 100 percent of the total population. Absent successful implementation of appropriate conservation measures, a project with 100 percent overlay of a species' distribution would have more severe effects to the long-term existence of that population than a project with more limited impacts to a smaller portion of a species' range.

However, according to information in our files *Sclerocactus brevispinus* conservation is being addressed, to the extent possible under section 7 of the Act, through its current status under the umbrella of the *S. glaucus* complex. Although the jeopardy threshold may be different, we have no information indicating whether a new threshold would provide greater protections to the species. In any case, appropriate conservation measures would be the same, and given additional regulations available to BLM now, which were not available at the time of listing, there is no indication or information available to suggest these provisions are not sufficient to protect the species.

BLM also maintains *Sclerocactus brevispinus* as a sensitive species. Information from Service files indicates that the recently completed formal interagency consultation and Final EIS (BLM 2005) for the Castle Peak/Eightmile Flat project provided specific conservation measures to protect *S. brevispinus* and its habitat (Service 2005, pp. 4–7, 42–44). For example, BLM and Newfield, Inc., have agreed to a moratorium on new oil field developments within the Pariette Wetlands ACEC (which contains approximately 1,249 ha (3,086 ac) of the *S. brevispinus* range, or 22 percent) until a complete reinventory of *S. brevispinus* is completed. This inventory is tentatively scheduled for the species' flowering period in spring 2007 (Gerbig 2006).

BLM policy (BLM 2001, p. 6) regarding federally listed species includes measures to implement management plans and programs that will conserve listed species and their habitats and implement conservation recommendations included in biological opinions. Information in our files indicates that the Pariette Wetlands ACEC includes a goal to ''enhance and protect the wetlands community and associated habitat adjacent to Pariette and Castle Peak Washes * * * while meeting the management objectives of the final recovery plans for the special status species associated with the area'' (BLM 1994, pp. 3–20). The ACEC management prescriptions also state that BLM will authorize no action in suitable habitat for threatened and endangered species if it jeopardizes the continued existence of the species or result in severe modification of the habitat. Of the 4,719 ha (11,660 ac) of federally managed lands in the ACEC, about 8 ha (20 acres) are open with standard lease terms and conditions for leasable minerals, 3,189 ha (7,880 ac) are leased with stipulations, and 1,497 ha (3,700 ac) are leased with highly restricted measures, but do not include a ''no surface occupancy'' stipulation.

Information in Service files indicates there are sufficient Federal regulations that offer protections to *S. brevispinus*, even though there are no State regulations addressing plant resources. Therefore, based on the information presented in the petition and available in our files for this factor, we find that the petition does not present substantial information indicating that the threats identified under this factor are significant, and the petitioned action is not warranted based on this factor alone.

E. Other Natural or Manmade Factors Affecting Its Continued Existence

The petitioners identified drought, genetic swamping of *Sclerocactus brevispinus* by *S. wetlandicus*, small population size, pollination problems, and climate change as additional threats facing *S. brevispinus*. Potential threats from severe drought are well documented (Service 1990, p. 11; BLM 2005). However, the threat to *S. brevispinus* by genetic swamping from *S. wetlandicus* is a natural evolutionary process postulated by Heil and Porter (2004, p. 199) and as such may take numerous generations and perhaps thousands of years to fully manifest itself.

Information in our files indicates that the species' inherent vulnerability due to its small population size may be a significant concern (Ellestrand and Ellam 1993, p. 228). However, there is no information to indicate that the species' range and population numbers have been significantly larger than at present, although recent losses from oil and gas development and illegal collection are known. The specifics of the species' pollination biology are not

known, and the specific impacts of climate change on *Sclerocactus brevispinus* are not known. Small population size and fragmentation, in combination with other natural factors such as limitations of the cacti's pollinator's range, may be impacting reproductive success. While the petition raises some interesting issues with respect to this factor, there is insufficient information to conclude that listing may be warranted based on this factor alone.

Finding

We have reviewed the petition and literature cited in the petition and evaluated that information in relation to other pertinent literature and information available in our files. After this review and evaluation, we find that the petition presents substantial information indicating that listing *Sclerocactus brevispinus* may be warranted. The petition provides substantial information supporting the present and threatened destruction of the species' habitat from direct and indirect effects associated with energy development across more than 90 percent of the species' range. Illegal and unauthorized overcollection of the species for horticultural purposes also was identified in the petition and is verified by information in our files. As such, we are initiating a further status review of *S. brevispinus* to determine whether listing the species under the Act may be warranted.

We also have reviewed the available information to determine if the existing and foreseeable threats pose an emergency to this species. We have determined that an emergency listing is not warranted at this time because the species receives current protection under the Act by its inclusion within the currently listed *Sclerocactus glaucus* complex.

The petitioners also request that we designate critical habitat for this species. We always consider the need for critical habitat designation when listing species. If we determine in our 12-month finding that listing *Sclerocactus brevispinus* is warranted, we will address the designation of critical habitat at the time of the proposed rulemaking.

Public Comments Solicited

Section 4(b)(3)(B) of the Act requires that we make a 12-month finding as to whether a petitioned action is (a) not warranted, (b) warranted, or (c) warranted but precluded by other pending proposals to determine whether other species are threatened or endangered, and we are making expeditious progress to list or delist qualified species. The 12-month finding is based on a status review that is initiated by a positive 90-day finding.

At this time, we are opening a 60-day comment period (see DATES) to allow all interested parties an opportunity to provide information on the status of *S. brevispinus* and on the 5-year review for the entire *Sclerocactus glaucus* complex (including *S. glaucus*, *S. wetlandicus*, and *S. brevispinus*), including potential threats to these cacti. We will base our 12-month finding, and our 5-year review (as discussed previously), on a review of the best scientific and commercial information available, including the studies cited in this notice and all such information received during the public comment period. Information regarding the following topics would be particularly useful: (1) Species biology, including but not limited to population trends, distribution, abundance, demographics, genetics, and taxonomy, including any evaluations or reviews of the studies cited in this notice; (2) habitat conditions, including but not limited to amount, distribution, and suitability; (3) conservation measures that have been implemented that benefit the species; (4) threat status and trends; and (5) other new information or data.

When our 12-month status review, and 5-year review, processes have been completed, our practice is to make comments, including names and home addresses of respondents, available for public review during regular business hours. Individual respondents may request that we withhold their names, home addresses, or other personal information, but if you wish us to consider withholding this information, you must state this prominently at the beginning of your comments. In addition, you must present a rationale for withholding this information. This rationale must demonstrate that disclosure would constitute a clearly unwarranted invasion of privacy. Unsupported assertions will not meet this burden. In the absence of exceptional, documentable circumstances, this information will be released. We will always make submissions from organizations or businesses, and from individuals identifying themselves as representatives or officials of organizations or businesses, available for public inspection in their entirety.

Please submit electronic comments in an ASCII or Microsoft Word file and avoid the use of any special characters or any form of encryption. Also, please include ''Attn: Uinta Basin Hookless Cactus'' or ''Attn: Pariette Cactus'' along with your name and return address in your e-mail message. If you do not receive a confirmation from the system that we have received your e-mail message, please submit your comments in writing using one of the alternate methods provided in the **ADDRESSES** section.

References Cited

A complete list of all references cited herein is available, upon request, from the Utah Fish and Wildlife Service Office (see **ADDRESSES**).

Author

The primary author of this document is Larry England, Botanist, Utah Ecological Services Office, U.S. Fish and Wildlife Service (see **ADDRESSES**).

Authority

The authority for this action is section 4 of the Endangered Species Act of 1973, as amended (16 U.S.C. 1531 *et seq.*).

Dated: December 7, 2006.

Kenneth Stansell,

Acting Director, Fish and Wildlife Service

[FR Doc. E6–21259 Filed 12–13–06; 8:45 am]

BILLING CODE 4310–55–P

DEPARTMENT OF COMMERCE

National Oceanic and Atmospheric Administration

50 CFR Part 622

[Docket No. 061121304–6304–01; I.D. 112006B]

RIN 0648–AT87

Fisheries of the Caribbean, Gulf of Mexico, and South Atlantic; Reef Fish Fishery of the Gulf of Mexico; Gulf Red Snapper Management Measures

AGENCY: National Marine Fisheries Service (NMFS), National Oceanic and Atmospheric Administration (NOAA), Commerce.

ACTION: Proposed temporary rule; request for comments.

SUMMARY: This proposed rule would implement interim measures to reduce overfishing of Gulf red snapper. This proposed rule would reduce the commercial and recreational quotas for red snapper, reduce the commercial minimum size limit for red snapper, reduce the recreational bag limit for Gulf red snapper, prohibit the retention of red snapper under the bag limit for captain and crew of a vessel operating as a charter vessel or headboat, and establish a target level of reduction of shrimp trawl bycatch mortality of red

snapper. The public comment period on the proposed rule will end on January 26, 2007, to provide the Gulf of Mexico Fishery Management Council and the public the opportunity to discuss and comment on the rule at the January Council meeting. The intended effect is to reduce overfishing of red snapper in the Gulf of Mexico.

DATES: Written comments must be received on or before January 26, 2007.

ADDRESSES: You may submit comments on the proposed rule by any of the following methods:

- E-mail: *0648–AT87.Proposed@noaa.gov*. Include in the subject line the following document identifier: 0648–AT87.
- Federal e-Rulemaking Portal: *http://www.regulations.gov*. Follow the instructions for submitting comments.
- Mail: Peter Hood, Southeast Regional Office, NMFS, 263 13th Avenue South, St. Petersburg, FL 33701.
- Fax: 727–824–5308; Attention: Peter Hood.

Copies of documents supporting this proposed rule, which includes a draft environmental impact statement (DEIS), and an initial regulatory flexibility analysis (IRFA), may be obtained from Peter Hood, Southeast Regional Office, NMFS, 263 13th Avenue South, St. Petersburg, FL 33701.

FOR FURTHER INFORMATION CONTACT: Peter Hood, telephone: 727–551–5784, fax: 727–824–5308, e-mail: *peter.hood@noaa.gov*.

SUPPLEMENTARY INFORMATION: The red snapper fishery of the Gulf of Mexico is managed under the Fishery Management Plan (FMP) for the Reef Fish Fishery of the Gulf of Mexico and the shrimp fishery is managed under the FMP for the Shrimp Fishery of the Gulf of Mexico. The FMPs were prepared by the Gulf of Mexico Fishery Management Council (Council) and are implemented under the authority of the Magnuson-Stevens Fishery Conservation and Management Act (Magnuson-Stevens Act) by regulations at 50 CFR part 622.

Background

The Gulf of Mexico red snapper stock is overfished and undergoing overfishing. Multiple fisheries influence the status of this stock, including the commercial and recreational red snapper fisheries, and the shrimp trawl fishery which takes red snapper incidentally when harvesting shrimp. The competing interests and goals of these multiple fisheries challenge fishery managers to balance multiple tradeoffs in rebuilding the red snapper stock.

The first rebuilding plan established in 1990 has been revised several times, including extension of the target date for rebuilding the stock, in response to new data and assessments which have provided a better understanding of stock biomass and influencing factors, including shrimp trawl bycatch mortality. The current rebuilding plan, implemented in 2005, is designed to end overfishing in 2009/2010 and rebuild the stock by 2032 to the biomass level needed to allow harvest at maximum sustainable yield on a continuing basis. The most recent stock assessment (2005) indicates red snapper catch and discard mortality in the directed red snapper fishery and bycatch mortality rates in the shrimp fishery are jeopardizing the success of the current rebuilding plan. In the western Gulf, the shrimp trawl fishery represents the greatest source of red snapper fishing mortality, followed by the commercial red snapper directed fishery, whereas the directed red snapper recreational fishery represents the greatest source of fishing mortality in the eastern Gulf. The eastern Gulf and western Gulf are separated by the Mississippi River delta.

At the August 2006 Council meeting, the Council voted to delay consideration of regulatory actions needed to address red snapper overfishing until more recent data and information become available for the directed red snapper and shrimp trawl fisheries. However, postponing development of a plan amendment would further delay progress in stock recovery because measures to address overfishing would not occur during the 2007 fishing season.

To address overfishing of the red snapper stock for 2007, NMFS is proposing this rule that would reduce fishing mortality in 2007 and allow progress towards rebuilding this stock until more permanent measures could be established to end overfishing. This proposed rule would also address overfishing by establishing a red snapper bycatch reduction goal for the shrimp fishery.

Provisions of This Proposed Rule

This proposed rule would reduce fishing mortality on red snapper in 2007 by reducing harvest and bycatch levels. Specifically, this proposed rule would: (1) reduce the red snapper total allowable catch (TAC) from 9.12 million lb (4.14 million kg) to 6.5 million lb (2.9 million kg), whole weight, resulting in a commercial quota of 3.315 million lb (1.504 million kg) and a recreational quota of 3.185 million lb (1.445 million kg); (2) reduce the daily red snapper recreational bag limit from four to two fish per person; establish a 0–fish red snapper bag limit for the captain and crew of a vessel operating as a charter vessel or headboat; (3) reduce the commercial minimum size limit from 15 inches (38 cm) to 13 inches (33 cm), total length; and (4) establish a target reduction goal for shrimp trawl bycatch mortality on red snapper that is 50 percent less than shrimp trawl bycatch mortality during the 2001–2003 benchmark years used in the 2005 stock assessment.

Measures to Reduce Directed Fishing Mortality

In developing this proposed rule, NMFS evaluated measures for TAC and the recreational fishery based on a qualitative assumption that some level of reduction in landings has occurred due to the direct effects of hurricanes and increased fuel costs during 2004 and 2005. Sufficient data are not available at this time to quantify fully the precise level of reduction, although preliminary recreational data suggests a decrease in landings has occurred in 2006.

The Magnuson-Stevens Act requires that NMFS manage the red snapper fishery to ensure harvest is constrained to the available quotas. For the commercial fishery, the 3.315 million-lb (1.504 million-kg) quota will be managed through an individual fishing quota (IFQ) program beginning in 2007. For the recreational fishery, NMFS previously has employed bag limits, size limits, and seasonal closures in an effort to constrain harvest to the available quota while minimizing, to the extent practicable, the short-term adverse economic and social impacts.

Reduction of TAC

This proposed rule would reduce the red snapper TAC for 2007 to 6.5 million lb (2.9 million kg), which is 0.5 million lb (0.23 million kg) less than the maximum allowable biological catch (ABC). Based on the 2005 stock assessment, TACs greater than 5 million lb (2.3 million kg) would not be expected to end overfishing immediately. TACs set at 5 million lb (2.3 million kg) or less during 2007 would end overfishing immediately, but only if all sources of fishing mortality (directed harvest, shrimp trawl bycatch, and closed season discards) could be reduced to the fishing mortality rate associated with harvesting the stock at the maximum sustainable yield. TACs greater than 5 million lb (2.3 million kg) but less than 7 million lb (3.2 million kg) would reduce fishing mortality and continue to allow rebuilding progress in

2007 consistent with the current rebuilding plan which ends overfishing in 2009. The Council would need to recommend more permanent TACs within or below this range after 2007 to be consistent with the current rebuilding plan over the long-term. The higher the TAC is set in 2007, the lower the TAC will need to be set in the future to end overfishing by 2009 to maintain adequate progress under the current rebuilding plan.

Bag Limit Reductions

Assuming some level of reduction in recreational landings has occurred due to hurricanes and increased fuel prices, based on preliminary data, the combined effect of reducing the daily recreational bag limit from 4 to 2 fish per person and reducing the captain and crew bag limit for vessels operating as charter vessels or headboats to zero should control harvest sufficiently to ensure the recreational fishery remains within its 3.185 million-lb (1.445 million-kg) recreational quota while maintaining the current recreational fishing season. Reducing the bag limit is estimated to achieve at least a 17–percent reduction in harvest, and, therefore, would benefit red snapper stock recovery. Reducing the captain and crew bag limit to zero is estimated to reduce red snapper landings by approximately 2 percent. The reduction from these two measures, combined with the reduction in landings attributed to the effects of hurricanes and increased fuel prices, would allow the recreational fishery to maintain its current 194–day recreational fishing season (April 21 October 31) for 2007.

Measures to Reduce Bycatch Mortality

For the red snapper stock to recover in a manner consistent with the current rebuilding plan, bycatch mortality must be minimized. This proposed rule addresses two sources of bycatch mortality -discard mortality in the directed commercial fishery and bycatch mortality in the shrimp fishery.

Reduction in the Commercial Minimum Size Limit

To reduce the number of red snapper discarded dead in the directed commercial red snapper fishery, this proposed rule would reduce the commercial minimum size limit from 15 to 13 inches (38 to 33 cm), total length. Red snapper discard mortality rates in the directed commercial fishery are very high--estimated to range between 71 and 82 percent. By reducing the commercial minimum size limit, fish between 13 and 15 inches (33 and 38 cm) would be retained and counted toward the quota rather than discarded, mostly dead, as bycatch. It is estimated that reducing the commercial minimum size limit by 2 inches (5 cm) would reduce the commercial red snapper fishery's dead discards by 40 to 60 percent.

NMFS carefully considered reducing the recreational minimum size limit but is not proposing to do so in this rulemaking because there is currently no scientific information to indicate a reduction in the recreational minimum size limit would reduce overfishing. This rule is being promulgated consistent with the provision of section 305(c) of the Magnuson-Stevens Act relating to interim measures needed to reduce overfishing. Measures that do not reduce overfishing would not be consistent with the regulatory authority provided in that provision of section 305(c).

Establishment of a Target Reduction for Shrimp Trawl Bycatch Mortality

To facilitate reduction of red snapper bycatch mortality in the shrimp fishery, the proposed rule would establish a target reduction in the shrimp trawl red snapper bycatch mortality rate that is 50 percent less than the bycatch mortality rate during the benchmark years, 2001–2003, used in the 2005 red snapper stock assessment. This target reflects the level of shrimp trawl effort documented in 2005 in areas where red snapper are abundant in the western Gulf of Mexico, compared to the level of effort during the benchmark years. The target goal does not meet the current rebuilding plan target mortality reduction level necessary to rebuild the red snapper stock. However, preliminary information for 2006 suggests effort in the shrimp fishery has continued to decline in offshore waters of the western Gulf of Mexico. Therefore, similar to the assumption applied to the directed red snapper fishery, NMFS is making a qualitative assumption effort for 2006 and 2007 will likely be less than the level of effort documented during 2005 for areas where red snapper are commonly taken. Additional bycatch mortality reduction is expected from the introduction of new bycatch reduction devices (BRDs) for the fishery under a pending revision to the certification criterion for BRDs. In combination, NMFS estimates red snapper bycatch mortality attributable to the shrimp fishery over the next few years may closely approximate the needed reductions from the benchmark years of 2001–2003, while allowing the industry some flexibility in achieving optimum yield, as it is currently defined for the fishery.

The Council may recommend a different course of action for a long-term management strategy to control shrimp trawl bycatch mortality of red snapper; however, the proposed reduction target would provide an interim means to address shrimp trawl bycatch in 2007. NMFS intends to provide 2006 shrimp trawl effort information to the Council as soon as it is available. If shrimp effort for 2006 is above the target, the Council may recommend further action in 2007 to maintain the proposed reductions in shrimp effort in areas of the western Gulf of Mexico where red snapper are most abundant.

Future Action

NMFS believes that this proposed rule is necessary to reduce overfishing of red snapper in the Gulf of Mexico. NMFS will consider all public comments received on this proposed rule in determining whether to proceed with a final rule and, if so, whether any revisions would be appropriate in the final rule. If NMFS issues a final rule, it would be effective for not more than 180 days, as authorized by section 305(c) of the Magnuson-Stevens Act. The final rule could be extended for an additional 180 days, provided that the public has had an opportunity to comment on the rule.

NMFS acknowledges the need to continue monitoring all sources of red snapper mortality to determine the appropriate level of future actions necessary to ensure progress consistent with the stock rebuilding plan over the long term.

Classification

At this time, NMFS has not determined whether the interim measures which this proposed rule would implement, are consistent with the national standards of the Magnuson-Stevens Act and other applicable laws. NMFS, in making that determination, will take into account the data, views, and comments received during the comment period on this proposed rule.

This proposed rule has been determined to be significant for purposes of Executive Order 12866.

NMFS prepared a draft environmental impact statement (DEIS) for this action; a notice of availability was published on October 13, 2006 (71 FR 60509).

NMFS prepared an IRFA, as required by section 603 of the Regulatory Flexibility Act, for this proposed rule. The IRFA describes the economic impact this proposed rule, if adopted, would have on small entities. A description of the action, why it is being considered, and the objectives of, and legal basis for this action are contained

at the beginning of this section in the preamble and in the **SUMMARY** section of the preamble. A copy of the full analysis is available from NMFS (see **ADDRESSES**). A summary of the IRFA follows.

This proposed rule would reduce TAC in the red snapper fishery, lower the recreational red snapper bag limit to 2 fish, lower the red snapper bag limit for captain and crew of a vessel operating as a charter vessel or headboat to 0 fish, reduce the red snapper minimum size limit in the commercial fishery to 13 inches (33 cm), and establish a reduction goal for red snapper bycatch mortality in the commercial shrimp fishery. The purpose for this action is to address overfishing of the red snapper stock on a temporary basis while the Council develops a comprehensive plan to reduce directed and incidental red snapper fishing mortality rates in the red snapper and shrimp fisheries. The Magnuson-Stevens Act provides the statutory basis for the proposed rule.

No duplicative, overlapping, or conflicting Federal rules have been identified.

This proposed action would be expected to impact red snapper commercial fishers and for-hire operators, and reef fish dealers and processors participating in the red snapper trade. The proposed action and certain proposed alternatives would also apply to the commercial shrimp fishery. However, these shrimp-related alternatives would either maintain the status quo, or otherwise accommodate current conditions, such that no direct impacts are expected to accrue at this time. Nevertheless, a description of the entities in the shrimp fishery is included in the following discussion.

The Small Business Administration (SBA) has established size criteria for all major industry sectors in the U.S. including fish harvesters, for-hire operations, fish processors, and fish dealers. A business involved in fish harvesting is classified as a small business if it is independently owned and operated, is not dominant in its field of operation (including its affiliates), and has combined annual receipts not in excess of $4.0 million (NAICS code 114111, finfish fishing) for all affiliated operations worldwide. For for-hire operations, the other qualifiers apply and the annual receipts threshold is $6.5 million (NAICS code 713990, recreational industries). For seafood processor and dealers, the SBA uses an employee threshold rather than a receipts threshold, or 500 or fewer persons on a full-time, part-time, temporary, or other basis, at all affiliated operations for a seafood processor and 100 or fewer persons for a seafood dealer.

Currently, 136 entities hold Class 1 licenses that allow a commercial vessel trip limit of up to 2,000 lb (907 kg) of red snapper and 628 entities hold Class 2 licenses that allow a trip limit of up to 200 lb (91 kg) of red snapper. Between 2002 and 2004, the top 50 red snapper vessels harvested a total of 2.77 million lbs (1.26 million kg) of red snapper, on average, or 64 percent of the industry total. Vessels ranked 51 to 131 harvested 1.29 million lbs (0.58 million kg), on average, or 30 percent of the industry total for the same period. In total, the top 131 vessels accounted for approximately 94 percent of the total red snapper commercial landings. Red snapper are mainly harvested by vertical line fishermen, who accounted for approximately 90 percent of commercial red snapper Gulf harvests, on average, between 2002 and 2004.

Reported average annual gross receipts (2004 dollars) of commercial reef fish vessels in the GOM range from $24,095 for low-volume vertical line vessels to $116,989 for high-volume longline vessels. Annual net incomes range from $4,479 for low-volume vertical line vessels to $28,466 for high-volume vertical line vessels. Some fleet activity is known to exist in the commercial red snapper fishery, but the extent of such activity is unknown. The maximum number of reef fish permits reported owned by the same person/entity is six permits. Additional permits (and the revenues associated with those permits) may be linked to an entity through affiliation rules, but such affiliation links cannot be made using existing data. A definitive determination of whether any commercial entities would be considered large entities cannot be made using average income information. However, based on the size and value of the commercial red snapper fishery (an average of 4.336 million lb (1.967 million kg) and $11.652 million ex-vessel revenue per year, 2002–2004), the number of participants in the fishery (136 Class 1 licenses and 628 Class 2 licenses), the summary statistics provided above, and maximum number of permits owned by a single entity, it is determined, for the purpose of this assessment, that all commercial reef fish harvest entities that would be affected by this action are small entities.

Currently, 1,625 vessels are estimated to be permitted to operate in the Gulf reef fish fishery in the for-hire sector. Fleet behavior also exists in this sector, with at least one entity reported to hold 12 permits. The bulk of the fishery, however, consists of single-permit operations.

The for-hire fleet is comprised of charterboats, which charge a fee on a vessel basis, and headboats, which charge a fee on an individual angler (head) basis. The average charterboat is estimated to generate $76,960 in annual revenues and $36,758 in annual profits, whereas the appropriate values for the average headboat are $404,172 and $338,209, respectively. The calculation of costs does not include fixed and other non-operating expenses, which tend to be higher for headboats.

Based on the average revenue figures, it is determined, for the purpose of this assessment, that all for-hire operations that would be affected by this action are small entities.

The measures in this action would also be expected to affect fish dealers, particularly those that receive red snapper from harvesting vessels. Two hundred and twenty-seven dealers currently have the required Federal permit to buy and sell commercial reef fish species. All processors would be included in this total since all processors must be dealers. From 1997–2002, an average of 154 dealers purchased red snapper from commercial vessels. Average employment information per reef fish dealer is unknown. Although dealers and processors are not synonymous entities, reported total employment for reef fish processors in the Southeast is estimated to be approximately 700 individuals, both part and full time. While all processors must be dealers, a dealer need not be a processor. Further, processing is a much more labor-intensive exercise than dealing. Therefore, given the total employment estimate for the processing sector (700 persons) and the total number of dealers operating in the red snapper fishery (154), and the total number of permitted reef fish dealers, it is assumed that the average number of employees per dealer and the average number of employees per processor would be unlikely to surpass the SBA employment benchmark and, for the purpose of this analysis, it is determined that all red snapper dealers and processors that would be affected by this action are small entities.

Although it is unknown how many eligible shrimp permit holders will apply for moratorium permits, and thus be eligible to fish for shrimp in the GOM, 2,666 vessels would qualify for the shrimp permit and are assumed to constitute the potential affected universe of shrimp vessels. The average annual gross revenue (all harvest species) per qualifying vessel in 2005

was approximately $116,000, while the comparable figure for active qualifying vessels (vessels that recorded shrimp harvests) is approximately $152,000. In the same year, the maximum annual gross revenue from shrimp by a vessel was approximately $757,000 for both all qualifying and active qualifying vessels, whereas the maximum annual gross revenue from all harvest species was approximately $1.89 million by an inactive qualifier and $757,000 for an active qualifier. This indicates that the inactive qualifier found activity in other fisheries more lucrative than participation in the shrimp fishery, and the most active qualifier operated exclusively in the shrimp fishery. Fleet activity is also known to exist in the commercial shrimp fishery, but the magnitude of such activity cannot be determined with available data. Given these findings, for the purpose of this analysis, it is determined that all shrimp vessels that would be affected by this action are small entities.

In 2005, 609 dealers were identified operating in the commercial shrimp fishery. Employment information for this sector is not available. In 2004, 61 processors in the shrimp fishery were identified, employing approximately 3,700 persons, or an average of 61 employees per entity. Similar to the finfish sector, shrimp processing is more labor intensive than dealing, so average employment in the shrimp dealer sector is assumed to be less than that in the processing sector. Since the average employment per entity does not exceed the SBA threshold, it is determined, for this analysis, that all shrimp dealers and processors that could be affected by this action are small entities.

This proposed rule would not change current reporting, recordkeeping, or other compliance requirements (other than the proposed measures described herein) under either the Reef Fish or Shrimp FMPs. Preexisting requirements include qualification criteria for for-hire vessel permits and participation in additional data collection programs if selected by NMFS. All of the information elements required for these processes are standard elements essential to the successful operation of a fishing business and should, therefore, already be collected and maintained as standard operating practice by the business. The requirements do not require professional skills.

This proposed rule would be expected to affect all vessels that operate in the commercial red snapper fishery, all vessels that have a Federal reef fish for-hire permit, and all vessels that qualify for a commercial shrimp fishery moratorium permit. The proposed action would also be expected to affect all reef fish and shrimp dealers and processors that handle product from these fisheries. All such entities have been determined, for the purpose of this analysis, to be small entities. Therefore, it is determined that the proposed action will affect a substantial number of small entities.

Commercial red snapper fishing vessels, for-hire operations, and red snapper dealers would be expected to bear the primary burden of the proposed actions, though spill-over impacts would be expected in associated industries, such as marinas and fishery suppliers. The net result of the combined proposed TAC reduction and commercial minimum size limit decrease for the commercial red snapper fishery would be expected to be an approximate 28–percent decline in net revenues, or approximately $7.0 million. Although over 750 entities are currently permitted to operate in the commercial red snapper fishery (136 entities with Class 1 licenses and 628 entities with Class 2 licenses), 131 vessels accounted for approximately 94 percent of the red snapper harvests from 2002–2005, which had an average ex-vessel value of approximately $11.18 million out of total average annual ex-vessel revenues for all fishing activity by these entities of approximately $17.34 million. Since most commercial red snapper fishing entities operate in multiple fisheries, the projected $7.0 million reduction in net revenues captures lost revenue for all species.

During 2002–2005, the top 50 harvesters in the commercial red snapper fishery averaged approximately $144,000 in ex-vessel revenue per year out of total finfish revenues of approximately $211,000, indicating approximately 68 percent of the total revenues came from red snapper. The second tier vessels averaged approximately $40,000 in red snapper revenues and approximately $84,000 total revenues, or 48 percent of total revenues coming from red snapper. Combined, the top 131 vessels averaged approximately $80,000 per year from red snapper, $132,000 total revenues, and 60 percent of total revenues coming from red snapper. The remaining vessels that landed red snapper accounted for only approximately $700 per vessel per year from red snapper, out of total average revenues of $14,000, or approximately 5 percent from red snapper. Red snapper most likely constitutes a bycatch species for this third-tier group.

A TAC reduction would most likely be expected to impact operations that target red snapper rather than those that incidentally harvest red snapper. If the entire quota reduction is assumed borne by the top 50 and 131 vessels, respectively, the reduction in net revenues would equate to approximately $140,000 and $53,000 for the two groups, respectively. Relating these figures to the averages provided in the previous paragraph is difficult because the annual averages represent gross ex-vessel values, whereas the losses represent net values, and the expected losses incorporate an expected increase of approximately $1.14 in the price per pound of red snapper expected to develop as a result of the IFQ program. This price increase equates to a 47.5–percent increase in the average price per pound over 2002–2005 ($11.65 million per year/4.66 million lb (2.11 million kg) = $2.40 per pound; $1.14/$2.40 = 47.5 percent). If the annual average red snapper revenues presented above are inflated by this 47.5–percent factor, the resultant values per vessel are $212,400 in red snapper revenues and $279,400 total revenues for the top 50 vessels, and $118,000 and $170,000 in red snapper and total revenues, respectively, for the top 131 vessels. Because the projected losses are across all species, the projected losses ($140,000 and $53,000) equate to approximately 50 percent of total net revenues ($140,000/$279,400) for the top 50 vessels and approximately 31 percent of total net revenues ($53,000/$170,000) for the top 131 vessels.

An alternative perspective is to consider the number of vessels projected to operate under the IFQ program. Under the IFQ program, the commercial red snapper fleet is expected to consolidate to 39–95 vessels, the range determined by whether the fleet gravitates to exclusively larger vessels (65–foot vessels) or small vessels (35–foot vessels). The period of time required to achieve this consolidation is not known, but a reduced TAC may accelerate the consolidation. Of course any IFQ-related consolidation is voluntary, vessels are compensated for their exit (through sale of their quota shares), and exiting vessels may continue to operate in other fisheries. Under the proposed TAC reduction, the resultant fleet is projected to be 28–68 vessels, or 11–27 fewer vessels than the status quo, with the range again determined by whether the fleet is primarily large vessels (28 vessels), or small vessels (68 vessels). Average performance of the fleet under the status quo (39–95 vessels) is estimated at approximately $274,000 ($26.0 million over 95 vessels) to $667,000 ($26.0 million over 39 vessels)

in net revenues. The projected loss of $7.0 million in net revenues under the proposed TAC reduction would be expected to reduce these values to approximately $200,000 and $487,000, respectively, or reductions of 27 percent.

The for-hire sector would be expected to lose approximately 2,000 trips in the charter vessel sector, 643 angler days in the headboat sector, and $43,000 overall in producer surplus as a result of the proposed action. These reductions would not be expected to occur uniformly across all operations because some vessels are more active in the red snapper fishery than others. If averaged over the 1,625 vessels active in the for-hire fleet, these reductions amount to fewer than 2 trips and $30 per permitted vessel.

The expenditures to related businesses associated with the expected trip losses in the for-hire and private angler sectors would also be expected to be lost as a result of the proposed action. These trips, however, represent less than 1 percent of the total effort directed at the species encompassed in the assessment (red snapper, grouper, dolphin, and king mackerel).

The proposed target bycatch reduction goal that would apply to the commercial shrimp fishery is administrative in nature and would not be expected to have any direct economic impact on any entities in the directed or associated sectors.

Five alternatives, including the status quo, were considered for the action to set TAC in the red snapper fishery. Three of the alternatives contained multiple options and sub-options to manage the recreational fishery under the respective TAC. The first alternative, the status quo, would not have achieved progress towards eliminating overfishing, and would increase the necessary reduction in subsequent years to allow the resource to continue on the designated recovery path, thereby increasing short-term adverse economic impacts relative to the proposed action, and would not meet NMFS objectives.

The second alternative to the proposed TAC would have reduced the red snapper TAC to 7.0 million lb (3.2 million kg). Although this alternative has the potential of generating, depending upon the sub-option selected, lower first-year adverse economic impacts than the proposed 6.5 million lb (3.0 million kg), this TAC would require greater TAC reduction in subsequent years, with greater adverse economic impacts than the proposed action.

The third alternative to the proposed TAC would have reduced the red snapper TAC to 6.0 million lb (2.7 million kg). This alternative would have reduced the TAC greater than necessary to end overfishing consistent with the current rebuilding plan and would be expected to result in greater adverse economic impacts, ranging from losses in economic value (consumer and producer surplus) in the recreational sector of approximately $16.0 million to $27.0 million and a loss of approximately $8.5 million in net revenues in the commercial sector, than the proposed action, which is expected to result in a reduction of consumer and producer surplus of approximately $15.0 million in the recreational sector and a reduction in net revenues of $7.0 million in the commercial sector.

The fourth alternative to the proposed TAC would have reduced the red snapper TAC to 5.0 million lbs (2.3 million kg). This alternative would have reduced the TAC greater than necessary to end overfishing consistent with the current rebuilding plan and would be expected to result in greater adverse economic impacts, ranging from losses in economic value in the recreational sector of approximately $23.0 million to $25.0 million and a loss of approximately $11.5 million in net revenues in the commercial sector, than the proposed action.

Two alternatives, the proposed alternative and the status quo, were considered for the action to set the captain and crew red snapper bag limit. The status quo, would be expected to decrease the ability of meeting harvest reduction targets and would have required more restrictive measures on recreational anglers, resulting in increased adverse economic impacts relative to the proposed action.

Three alternatives, including the status quo, were considered for the commercial red snapper minimum size limit. The first alternative to the proposed action, the status quo alternative, would be expected to result in continued unnecessary bycatch mortality and would not, therefore, meet NMFS objectives.

The second alternative to the proposed action would eliminate the commercial minimum size limit entirely. Because no commercial market is known to exist for red snapper smaller than 12 inches (30 cm), the expected economic impacts for this alternative relative to those of the proposed action are virtually identical. However, maintaining some minimum size limit in the commercial sector, as would be accomplished by the proposed action, would be expected to generate unquantifiable economic benefits accruing to a perception of greater sector equity and avoidance of user conflict since the proposed action would decrease the incentive for commercial operations to move their fishing location to areas where smaller fish congregate.

Four alternatives, including the proposed status quo alternative, were considered for the gear requirements. The proposed action would not impose any new gear requirements on fishermen and would not result in any direct adverse economic impacts on these entities. Each of the three alternatives to the proposed action would be expected to result in greater adverse economic impacts than the proposed action through either increased gear costs or lowered operating efficiency. Given the short-term nature of the action, these adverse impacts would not be expected to be balanced by the economic benefits of improved stock conditions. Thus, each alternative would be expected to increase costs without demonstrable benefits and, thus, would not meet NMFS objectives.

Three alternatives, including the status quo, were considered for the red snapper bycatch mortality reduction target in the commercial shrimp fishery. The status quo would not have established a bycatch reduction target, would not ensure consistent reductions in bycatch fishing mortality of juvenile red snapper in the shrimp fishery, and would not meet NMFS objectives. The second alternative to the proposed bycatch reduction target would establish a higher reduction target than the proposed action. Although this would be an administrative action with no expected direct adverse economic effects, the higher target exceeds the level of bycatch reduction the fishery has demonstrated to date and would, therefore, be expected to require further effort reductions, resulting in greater adverse economic impacts than the proposed action.

Four alternatives, including the proposed status quo alternative, were considered for effort reduction in the commercial shrimp fishery. The proposed status quo would not impose any effort controls on the fishery and would not be expected to result in any adverse economic impacts. Each of the other alternatives would have imposed effort limitations in the shrimp fishery and would, therefore, be expected to result in greater adverse economic impacts than the proposed action, ranging from $7.8 million to $14.8 million in lost ex-vessel revenues, fishery-wide. These impacts would be expected to be borne by 394–863 vessels. Although some behavioral changes would be expected to mitigate

these losses, the nature of these changes and their net impact cannot be determined.

List of Subjects in 50 CFR Part 622

Fisheries, Fishing, Puerto Rico, Reporting and recordkeeping requirements, Virgin Islands.

Dated: December 8, 2006.

Samuel D. Rauch III,

Deputy Assistant Administrator for Regulatory Programs, National Marine Fisheries Service.

For the reasons set out in the preamble, 50 CFR part 622 is proposed to be amended as follows:

PART 622—FISHERIES OF THE CARIBBEAN, GULF, AND SOUTH ATLANTIC

1. The authority citation for part 622 continues to read as follows:

Authority: 16 U.S.C. 1801 *et seq.*

2. In § 622.37, paragraph (d)(1)(iv) is suspended and paragraph (d)(1)(vi) is added to read as follows:

§ 622.37 Size limits.

* * * * *

(d) * * *

(1) * * *

(vi) Red snapper—16 inches (40.6 cm), TL, for a fish taken by a person subject to the bag limit specified in § 622.39(b)(1)(iii) and 13 inches (38.1 cm), TL, for a fish taken by a person not subject to the bag limit.

* * * * *

3. In § 622.39, paragraphs (b)(1)(iii) and (b)(1)(v) are suspended and paragraphs (b)(1)(viii) and (b)(1)(ix) are added to read as follows:

§ 622.39 Bag and possession limits.

* * * * *

(b) * * *

(1) * * *

(viii) Red snapper—2. However, no red snapper may be retained by the captain or crew of a vessel operating as a charter vessel or headboat—their bag limit is zero.

(ix) Gulf reef fish, combined, excluding those specified in paragraphs (b)(1)(i), (ii), (iv), (vi), (vii), and (viii) of this section and excluding dwarf sand perch and sand perch—20, but not to exceed 10 vermilion snapper.

* * * * *

4. In § 622.42, paragraphs (a)(1)(i) and (a)(2) are suspended and paragraphs (a)(1)(v) and (a)(3) are added to read as follows:

§ 622.42 Quotas.

* * * * *

(a) * * *

(1) * * *

(v) Red snapper—3.315 million lb (1.504 million kg), round weight.

* * * * *

(3) *Recreational quota for red snapper.* The following quota applies to persons who harvest red snapper other than under commercial vessel permits for Gulf reef fish and the commercial quota specified in paragraph (a)(1)(v) of this section—3.185 million lb (1.445 million kg), round weight.

* * * * *

[FR Doc. 06–9676 Filed 12–11–06; 10:01 am]

BILLING CODE 3510–22–S

DEPARTMENT OF COMMERCE

National Oceanic and Atmospheric Administration

50 CFR Part 648

[I.D. 120606A]

Mid-Atlantic Fishery Management Council; Public Hearings

AGENCY: National Marine Fisheries Service (NMFS), National Oceanic and Atmospheric Administration (NOAA), Commerce.

ACTION: Notice of public hearing meetings; request for comments.

SUMMARY: The Mid-Atlantic Fishery Management Council is developing Amendment 14 to the Summer Flounder, Scup, and Black Sea Bass FMP to implement a rebuilding plan to rebuild the scup stock to the stock level associated with maximum sustainable yield (B_{MSY}) and make the scup Gear Restricted Areas (GRAs) currently addressed and modified through the annual specification setting process modifiable though frameworks to the FMP.

DATES: Written comments will be accepted until January 26, 2007. All public hearings will begin at 7 p.m. The dates and locations of the meetings are as follows:

- Monday, January 22, 2007: Hilton Garden Inn Providence Airport/ Warwick, One Thuber Street,Warwick, RI 02886.
- Tuesday, January 23, 2007: Best Western East End, 1830 Route 25, Riverhead, NY 11901.
- Wednesday, January 24, 2007: Holiday Inn, 290 State Highway 37 East, Toms River, NJ 08753.

ADDRESSES: Comments may be submitted through any of the following methods:

- Mail: Daniel T. Furlong, Executive Director, Mid-Atlantic Fishery Management Council, 300 S. New Street, Dover, DE 19904
- Fax: 302–674–5399
- Email: *info@mafmc.org*

FOR FURTHER INFORMATION CONTACT: Daniel T. Furlong, Executive Director of the Mid-Atlantic Fishery Management, 302–674–2331, ext. 19.

SUPPLEMENTARY INFORMATION:

Background

The purpose of these public meetings is to allow stakeholder groups and interested parties to comment on actions proposed in Amendment 14 to the Summer Flounder, Scup, and Black Sea Bass FMP. In August 2005, NMFS notified the Council that the scup stock has officially been designated as overfished. Therefore, the purpose of this amendment is to develop a rebuilding plan for the scup stock, thereby preventing overfishing and rebuilding the scup stock to the level associated with maximum sustainable yield (B_{MSY}). In addition, the scup Gear Restricted Areas (GRAs) currently addressed and modified through the annual specification setting process would be made modifiable through frameworks to the FMP. This action is needed to improve the timing of implementation of modifications to the GRAs and allow those actions to be expedited through framework documents as opposed to annual specifications. The Amendment document that will be used at the meetings will be mailed to all entities on the Council's mailing list. Additional copies are readily available from the above address or via the Internet at *http://www.mafmc.org/mid-atlantic/comments/comments.htm* .

Special Accommodations

The hearings are physically accessible to people with disabilities. Requests for sign language interpretation or other auxiliary aids should be directed to Jan Bryan (302–674–2331 ext: 18) at the Mid-Atlantic Council office at least 5 days prior to the hearing date.

Dated: December 6, 2006.

James P. Burgess,

Acting Director, Office of Sustainable Fisheries, National Marine Fisheries Service.

[FR Doc. E6–21235 Filed 12–13–06; 8:45 am]

BILLING CODE 3510–22–S

Notices

Federal Register

Vol. 71, No. 240

Thursday, December 14, 2006

This section of the FEDERAL REGISTER contains documents other than rules or proposed rules that are applicable to the public. Notices of hearings and investigations, committee meetings, agency decisions and rulings, delegations of authority, filing of petitions and applications and agency statements of organization and functions are examples of documents appearing in this section.

DEPARTMENT OF AGRICULTURE

Forest Service

Information Collection; Optional Ethnicity Survey

AGENCY: Forest Service, USDA.

ACTION: Notice: request for comment.

SUMMARY: In accordance with the Paperwork Reduction Act of 1995, the Forest Service is seeking comments from all interested individuals and organizations on a new information collection entitled, Optional Ethnicity Survey.

DATES: Comments must be received in writing on or before February 12, 2007 to be assured of consideration. Comments received after that date will be considered to the extent practicable.

ADDRESSES: Comments concerning this notice should be addressed to Senior, Youth and Volunteer Programs (SYVP) United States Department of Agriculture, Forest Service, Director, Senior, Youth and Volunteer Programs, P.O. 96090 (Mail Stop 1136), Washington, DC 20090–6090.

Comments also may be submitted via facsimile to (703) 605–5115 or by e-mail to: *syvp/wo@fs.fed.us*.

The public may inspect comments received at the USDA, Forest Service, Office of the Director, Senior, Youth and Volunteer Programs, Room 1010, 1621 North Kent Street, Arlington, VA 22209 during normal business hours. Visitors are encouraged to call ahead to (703) 605–4854 to facilitate entry to the building.

FOR FURTHER INFORMATION CONTACT: Ransom Hughes, Senior, Youth and Volunteer Programs at 703–605–4854. Individuals who use TDD may call the Federal Relay Service (FRS) at 1–800–877–8339, 24 hours a day, every day of the year, including holidays.

SUPPLEMENTARY INFORMATION:

Title: Optional Ethnicity Survey.

OMB Number: 0596–NEW.

Type of Request: New.

Abstract: This new information collection will assist in the compilation of the Senior Youth and Volunteer Programs (SYVP) Accomplishment Report. The figures reported regarding participant ethnicity need to be verified and accurate, as the information in the SYVP report is included in the Report of the Forest Service, shared with Congress. SYVP program coordinators will collect information on the ethnicity of each program participant annually, and each SYVP participant will have the opportunity to respond. Inability to collect the information will result in an inability to validate the SYVP Accomplishment Report.

Estimate of Annual Burden: 2 minutes (.0333 hour).

Type of Respondents: SYVP participants.

Estimated Annual Number of Respondents: 100,000.

Estimated Annual Number of Responses per Respondent: 1.

Estimated Total Annual Burden on Respondents: 3,333.

Comment is invited on: (1) Whether this collection of information is necessary for the stated purposes and the proper performance of the functions of the agency, including whether the information will have practical or scientific utility; (2) the accuracy of the agency's estimate of the burden of the collection of information, including the validity of the methodology and assumptions used; (3) ways to enhance the quality, utility, and clarity of the information to be collected; and (4) ways to minimize the burden of the collection of information on respondents, including the use of automated, electronic, mechanical, or other technological collection techniques or other forms of information technology.

All comments received in response to this notice, including names and addresses when provided, will be a matter of public record. Comments will be summarized and included in the request for Office of Management and Budget approval.

Dated: December 7, 2006.

Irving W. Thomas,

Associate Deputy Chief.

[FR Doc. E6–21310 Filed 12–13–06; 8:45 am]

BILLING CODE 3410–11–P

DEPARTMENT OF AGRICULTURE

Forest Service

Thorn Fire Salvage Recovery Project, Malheur National Forest, Grant County, OR

AGENCY: Forest Service, USDA

ACTION: Cancellation Notice.

SUMMARY: On December 8, 2006, a Notice of Intent (NOI) to prepare an environmental impact statement (EIS) for the Thorn Salvage Recovery Project on the Blue Mountain Ranger District of the Malheur National Forest, was published in the **Federal Register** (71 FR 71120). Forest Service has decided to cancel the preparation of this EIS. The NOI is hereby rescinded.

FOR FURTHER INFORMATION CONTACT: Jerry Hensley, Project Manager, Malheur National Forest, 431 Patterson Bridge Road, P.O. Box 909, John Day, Oregon, telephone 541–575–3167, e-mail *jhensley@fs.fed.us.*

Dated: December 8, 2006.

Gary L. Benes,

Forest Supervisor.

[FR Doc. 06–9687 Filed 12–13–06; 8:45 am]

BILLING CODE 3410–11–M

DEPARTMENT OF AGRICULTURE

Forest Service

Chrome Fire Salvage Recovery Project, Malheur National Forest, Grant County, OR

AGENCY: Forest Service, USDA.

ACTION: Cancellation Notice.

SUMMARY: On December 8, 2006, a Notice of Intent (NOI) to prepare an environmental impact statement (EIS) for the Chrome Fire Salvage Recovery Project on the Blue Mountain Ranger District of the Malheur National Forest, was published in the **Federal Register** (71 FR 71121). Forest Service has decided to cancel the preparation of this EIS. The NOI is hereby rescinded.

FOR FURTHER INFORMATION CONTACT: Jerry Hensley, Project Manager, Malheur National Forest, 431 Patterson Bridge Road, P.O. Box 909, John Day, Oregon, telephone 541–575–3167, e-mail *jhensley@fs.fed.us.*

Dated: December 8, 2006.

Gary L. Benes,

Forest Supervisor.

[FR Doc. 06–9688 Filed 12–13–06; 8:45 am]

BILLING CODE 3410–11–M

DEPARTMENT OF AGRICULTURE

Forest Service

USDA Forest Service Open Space Conservation Strategy and Implementation Plan

AGENCY: Forest Service, USDA.

ACTION: Request for public input; extension of comment period.

SUMMARY: The Forest Service has extended the deadline for receiving input into the development of the USDA Forest Service Open Space Conservation Strategy and Implementation Plan from December 13, 2006, to December 29, 2006. The Strategy and Implementation Plan will help shape the agency's strategic role in a national effort to conserve open space. The Forest Service is interested in addressing the effects of the loss of open space on private forests; on the National Forests and Grasslands and surrounding landscape; and on forests in cities, suburbs, and towns. Input for the Strategy and Implementation Plan should focus on programs, research, partnerships, and/or policy recommendations that could be developed to conserve open space. See **SUPPLEMENTARY INFORMATION** section for more background on the loss of open space and the Strategy and Implementation Plan.

DATES: The Forest Service will review public input received no later than December 29, 2006.

ADDRESSES: Send written comments to Claire Harper, USDA Forest Service, Cooperative Forestry, Mail Stop Code 1123, 1400 Independence Avenue, SW., Washington, DC 20250–1123; via electronic mail to *openspace@fs.fed.us*; or via facsimile to (202) 205–1271. The agency cannot confirm receipt of comments. All comments, including names and addresses when provided, are placed in the record and are available for public inspection. The public may inspect comments during regular business hours at the office of the Cooperative Forestry Staff, 4th Floor SE., Yates Building, 201 14th Street, SW., Washington, DC. Visitors are encouraged to call ahead to (202) 205–1389 to facilitate entry into the building.

FOR FURTHER INFORMATION CONTACT: For general information about the Open Space Conservation Strategy and Implementation Plan and the loss of open space, contact Claire Harper, USDA Forest Service, Cooperative Forestry, by telephone at (202) 205–1389 or by electronic mail at *openspace@fs.fed.us*. For a summary of the Forest Service's current research, programs, and resources available to facilitate open space conservation, please review the Forest Service's publication entitled ''Cooperating Across Boundaries: Partnerships to Conserve Open Space in Rural America.'' Electronic copies of this publication are available at *http://www.fs.fed.us/projects/four-threats/documents/cooperatingacrossboundaries.pdf*, and hardcopies are available by contacting Claire Harper at *openspace@fs.fed.us*.

SUPPLEMENTARY INFORMATION:

I. Background

In 2003, Forest Service Chief Dale Bosworth identified the loss of open space as one of four great threats facing our nation's forests and grasslands. Loss of open space is an issue that affects the sustainability of both the National Forests and Grasslands and private forests. Open space—including public and private land, wilderness and working land—provides a multitude of public benefits and ecosystem services we all need and enjoy. Three interrelated trends of conversion, fragmentation, and parcelization are jeopardizing the long term health and function of forests, limiting management options, and reducing opportunities for public enjoyment and use. To address the loss of open space threat, the Forest Service is building a national strategy to identify how the agency plans to focus its efforts on the issue. This strategy will provide actions and policy recommendations to conserve open space, with an emphasis on partnerships and collaborative approaches.

II. Open Space Conservation Strategy and Implementation Plan

The Forest Service recognizes that it is not the only contributor to open space conservation; it is only one among many. The Forest Service also acknowledges that the agency's role in open space conservation is not to regulate development or land use, but is to provide expertise, resources, information, and programs. To help prioritize and focus the agency's efforts, the Forest Service plans to develop and refine an Open Space Conservation Strategy and Implementation Plan to address the loss of open space.

Input for the Strategy and Implementation Plan should focus on programs, research, partnerships and/or policy recommendations that could be developed to conserve open space. Specifically, input regarding the following three questions is most useful:

1. How can the Forest Service protect land from conversion to other uses;

2. How can the Forest Service assist private landowners and communities in maintaining and managing their land as sustainable forests and grasslands; and

3. How can the Forest Service mitigate the impacts of existing and new developments.

By receiving input from people with diverse interests and perspectives, the agency hopes to attain an array of viewpoints and ideas regarding the Open Space Conservation Strategy and Implementation Plan. Feedback from a range of interested individuals will assist the agency in developing a well-informed, focused, and effective strategy to address the loss of open space threat.

Dated: December 7, 2006.

Robin L. Thompson,

Associate Deputy Chief, State and Private Forestry.

[FR Doc. E6–21238 Filed 12–13–06; 8:45 am]

BILLING CODE 3410–11–P

DEPARTMENT OF COMMERCE

Foreign-Trade Zones Board

[Docket 46–2006]

Foreign-Trade Zone 222—Montgomery, AL; Request for Manufacturing Authority; Arvin Meritor, Inc. (Automotive Parts)

An application has been submitted to the Foreign-Trade Zones Board (the Board) by the Montgomery Area Chamber of Commerce, grantee of FTZ 222, requesting authority on behalf of Arvin Meritor, Inc. (Arvin Meritor) to manufacture automotive parts under FTZ procedures within FTZ 222. The application was filed on December 5, 2006.

Arvin Meritor operates a facility (150 employees, annual capacity for up to 1.5 million door modules) within Site 1 of FTZ 222 located at 139 Folmar Parkway, within the Interstate Industrial Park. The proposed manufacturing activity would involve the use of foreign-sourced components (initially representing 42% of total materials) to produce door modules for the Hyundai Motor Manufacturing Alabama, LLC plant (SZ 222A). Components include latch assemblies, adaptors and retainers, guide rails, handle brackets, module panels, pulleys, drums and drum parts, clamp assemblies, support brackets,

carrier plates, screws, spacers, washers, grommets, rivets and stoppers.

FTZ procedures would exempt Arvin Meritor from Customs duty payments on the foreign components used in production for export to non-NAFTA countries. On domestic shipments transferred in-bond to U.S. automotive assembly plants with subzone status, no duties would be paid on the foreign-origin components used in automobile and light truck production until the finished vehicles are formally entered for consumption, at which time the finished automobile duty rate (2.5%) would be applied to the foreign-origin components. For the individual door modules withdrawn directly by Arvin Meritor for Customs entry, the finished automotive part rate (2.5%) could be applied to the foreign origin components (duty-free to 8.5%). The company indicates that it would also realize savings under FTZ procedures for the following reasons: duty deferral, duty exemption on scrap/waste, and logistical/paperwork efficiencies.

Public comment is invited from interested parties. Submissions (original and 3 copies) shall be addressed to the Board's Executive Secretary at the address below. The closing period for their receipt is February 12, 2007. Rebuttal comments in response to material submitted during the foregoing period may be submitted during the subsequent 15-day period to February 27, 2007.

A copy of the application and accompanying exhibits will be available for public inspection at each of the following locations: U.S. Department of Commerce Export Assistance Center, U.S. Department of Commerce Export Assistance Center, 950 22nd Street North, Suite 707, Birmingham, Alabama 35203; and, Office of the Executive Secretary, Foreign-Trade Zones Board, Room 2814B, U.S. Department of Commerce, 1401 Constitution Avenue, NW., Washington, DC 20230–0002; Tel: (202) 482–2862.

Dated: December 5, 2006.

Pierre V. Duy,

Acting Executive Secretary.

[FR Doc. E6–21325 Filed 12–13–06; 8:45 am]

BILLING CODE 3510–DS–P

DEPARTMENT OF COMMERCE

International Trade Administration

[A–122–840]

Preliminary Results of Antidumping Duty Changed Circumstances Review: Carbon and Certain Alloy Steel Wire Rod from Canada

AGENCY: Import Administration, International Trade Administration, Department of Commerce.

SUMMARY: On November 6, 2006, the Department of Commerce published a notice of initiation of a changed circumstances review of the antidumping duty order on carbon and certain alloy steel wire rod products from Canada. We have preliminarily concluded that 1) Ivaco Rolling Mills 2004 L.P. is the successor–in-interest to Ivaco Rolling Mills L.P.; and 2) Sivaco Ontario, a division of Sivaco Wire Group 2004 L.P., is the successor–in-interest to Ivaco Inc. As a result, Ivaco Rolling Mills 2004 L.P., and Sivaco Ontario, a division of Sivaco Wire Group 2004 L.P., (collectively ''Ivaco'') should receive the same antidumping duty treatment with respect to carbon and certain alloy steel wire rod from Canada as Ivaco Rolling Mills L.P. and Ivaco Inc.

EFFECTIVE DATE: December 14, 2006.

FOR FURTHER INFORMATION CONTACT: Audrey Twyman or Brandon Farlander, at (202) 482–3534 or (202) 482–0182, respectively; AD/CVD Operations, Office 1, Import Administration, International Trade Administration, U.S. Department of Commerce, 14th Street & Constitution Avenue, NW, Washington, DC 20230.

SUPPLEMENTARY INFORMATION:

Background

In its January 12, 2006 response to Section A of the Department's original questionnaire, Ivaco notified the Department that the assets of Ivaco, Inc. and all of its divisions (*e.g.*, Sivaco Ontario, and Sivaco Quebec) had been purchased on December 1, 2004. As a result, the Department self–initiated a changed circumstances review of the antidumping duty order on carbon and certain alloy steel wire rod from Canada. *See Preliminary Results of Antidumping Duty Administrative Review and Notice of Initiation of Changed Circumstances Review: Carbon and Certain Alloy Steel Wire Rod from Canada*, 71 FR 64921 (November 6, 2006). On June 1, 2006, and October 27, 2006, the Department issued Ivaco supplemental questionnaires requesting further details on Ivaco's successor–in-interest claims. The company's responses were received by the Department on July 6, 2006, and November 20, 2006.

Scope of the Order

The merchandise subject to this order is certain hot–rolled products of carbon steel and alloy steel, in coils, of approximately round cross section, 5.00 mm or more, but less than 19.00 mm, in solid cross-sectional diameter.

Specifically excluded are steel products possessing the above–noted physical characteristics and meeting the Harmonized Tariff Schedule of the United States (HTSUS) definitions for (a) stainless steel; (b) tool steel; (c) high nickel steel; (d) ball bearing steel; and (e) concrete reinforcing bars and rods. Also excluded are (f) free machining steel products (*i.e.*, products that contain by weight one or more of the following elements: 0.03 percent or more of lead, 0.05 percent or more of bismuth, 0.08 percent or more of sulfur, more than 0.04 percent of phosphorus, more than 0.05 percent of selenium, or more than 0.01 percent of tellurium).

Also excluded from the scope are 1080 grade tire cord quality wire rod and 1080 grade tire bead quality wire rod. Grade 1080 tire cord quality rod is defined as: (i) grade 1080 tire cord quality wire rod measuring 5.0 mm or more but not more than 6.0 mm in cross-sectional diameter; (ii) with an average partial decarburization of no more than 70 microns in depth (maximum individual 200 microns); (iii) having no non–deformable inclusions greater than 20 microns and no deformable inclusions greater than 35 microns; (iv) having a carbon segregation per heat average of 3.0 or better using European Method NFA 04–114; (v) having a surface quality with no surface defects of a length greater than 0.15 mm; (vi) capable of being drawn to a diameter of 0.30 mm or less with 3 or fewer breaks per ton, and (vii) containing by weight the following elements in the proportions shown: (1) 0.78 percent or more of carbon, (2) less than 0.01 percent of aluminum, (3) 0.040 percent or less, in the aggregate, of phosphorus and sulfur, (4) 0.006 percent or less of nitrogen, and (5) not more than 0.15 percent, in the aggregate, of copper, nickel and chromium.

Grade 1080 tire bead quality rod is defined as: (i) grade 1080 tire bead quality wire rod measuring 5.5 mm or more but not more than 7.0 mm in cross-sectional diameter; (ii) with an average partial decarburization of no more than 70 microns in depth (maximum individual 200 microns); (iii) having no non–deformable inclusions greater than 20 microns and no

deformable inclusions greater than 35 microns; (iv) having a carbon segregation per heat average of 3.0 or better using European Method NFA 04–114; (v) having a surface quality with no surface defects of a length greater than 0.2 mm; (vi) capable of being drawn to a diameter of 0.78 mm or larger with 0.5 or fewer breaks per ton; and (vii) containing by weight the following elements in the proportions shown: (1) 0.78 percent or more of carbon, (2) less than 0.01 percent of soluble aluminum, (3) 0.040 percent or less, in the aggregate, of phosphorus and sulfur, (4) 0.008 percent or less of nitrogen, and (5) either not more than 0.15 percent, in the aggregate, of copper, nickel and chromium (if chromium is not specified), or not more than 0.10 percent in the aggregate of copper and nickel and a chromium content of 0.24 to 0.30 percent (if chromium is specified).

For purposes of grade 1080 tire cord quality wire rod and grade 1080 tire bead quality wire rod, an inclusion will be considered to be deformable if its ratio of length (measured along the axis - that is, the direction of rolling - of the rod) over thickness (measured on the same inclusion in a direction perpendicular to the axis of the rod) is equal to or greater than three. The size of an inclusion for purposes of the 20 microns and 35 microns limitations is the measurement of the largest dimension observed on a longitudinal section measured in a direction perpendicular to the axis of the rod. This measurement methodology applies only to inclusions on certain grade 1080 tire cord quality wire rod and certain grade 1080 tire bead quality wire rod that are entered, or withdrawn from warehouse, for consumption on or after July 24, 2003.

The designation of the products as ''tire cord quality'' or ''tire bead quality'' indicates the acceptability of the product for use in the production of tire cord, tire bead, or wire for use in other rubber reinforcement applications such as hose wire. These quality designations are presumed to indicate that these products are being used in tire cord, tire bead, and other rubber reinforcement applications, and such merchandise intended for the tire cord, tire bead, or other rubber reinforcement applications is not included in the scope. However, should petitioners or other interested parties provide a reasonable basis to believe or suspect that there exists a pattern of importation of such products for other than those applications, end–use certification for the importation of such products may be required. Under such circumstances, only the importers of record would normally be required to certify the end use of the imported merchandise.

All products meeting the physical description of subject merchandise that are not specifically excluded are included in this scope.

The products under review are currently classifiable under subheadings 7213.91.3010, 7213.91.3015, 7213.91.3090, 7213.91.3092, 7213.91.4510, 7213.91.4590, 7213.91.6010, 7213.91.6090, 7213.99.0031, 7213.99.0038, 7213.99.0090, 7227.20.0010, 7227.20.0020, 7227.20.0090, 7227.20.0095, 7227.90.6010, 7227.90.6051, 7227.90.6053, 7227.90.6058, 7227.90.6059, and 7227.90.6080 of the HTSUS. Although the HTSUS subheadings are provided for convenience and customs purposes, the written description of the scope of this proceeding is dispositive.

Preliminary Results of the Review

Pursuant to section 751(b) of the Tariff Act of 1930, as amended (''the Act''), and 19 CFR 351.216, we will conduct a changed circumstances review upon receipt of information concerning, or a request from an interested party for a review of, an antidumping duty finding or order that shows changed circumstances sufficient to warrant a review of the order. The information submitted by Ivaco stating the change in ownership and change in the respondent entities' legal names demonstrates changed circumstances sufficient to warrant a review. *See* 19 CFR 351.216(d).

The respondents named in our initiation notice were Ivaco Rolling Mills L.P. (aka Ivaco Rolling Mills 2004 L.P.), and Sivaco Ontario Processing (aka Sivaco Ontario, a division of Sivaco Wire Group 2004 L.P.).[1] In the most recently completed review, the responding entities were Ivaco Rolling Mills L.P. (the producer) and Ivaco Inc.,[2] which through its division Sivaco Ontario, purchased wire rod from Ivaco Rolling Mills L.P. and sold wire rod to unaffiliated customers after further processing.

As noted above in the ''Background'' section of this notice, Ivaco notified the Department that the assets of Ivaco, Inc. and all of its divisions were purchased on December 1, 2004. Subsequent to the purchase, Ivaco Rolling Mills L.P. was renamed and is now known as Ivaco Rolling Mills 2004 L.P., and Sivaco Ontario and Sivaco Quebec were reorganized into divisions of Sivaco Wire Group 2004 L.P. Ivaco, Inc. is now known as Heico 2004 Member Inc. (''Heico 2004''). Heico 2004 functions as a headquarters, managing the operations of Ivaco Rolling Mills 2004 L.P. and Sivaco Wire Group 2004 L.P. Heico 2004, Ivaco Rolling Mills 2004 L.P., and Sivaco Wire group 2004 L.P. are commonly owned.

Therefore, the Department self–initiated a changed circumstances review to determine whether Ivaco Rolling Mills 2004 L.P. and Sivaco Wire Group 2004 L.P., including its divisions, Sivaco Ontario and Sivaco Quebec, are successors–in-interest to Ivaco Rolling Mills L.P. and Ivaco Inc., respectively.

In determining whether one company is the successor–in-interest to another for purposes of applying the antidumping duty law, the Department examines several factors including, but not limited to, changes in: (1) management; (2) production facilities; (3) supplier relationships; and (4) customer base. *See, e.g., Polychloroprene Rubber from Japan: Final Results of Changed Circumstances Review*, 67 FR 58 (January 2, 2002) (''*Polychloroprene Rubber from Japan*'') (citing *Brass Sheet and Strip from Canada: Final Results of Antidumping Duty Administrative Review*, 57 FR 20460, 20462 (May 13, 1992) (''*Canadian Brass*'')).[3] While no single factor or combination of factors will necessarily provide a dispositive indication, the Department will generally consider the new company to be the successor–in-interest to the previous company if the resulting operation with regard to the subject merchandise is not materially dissimilar to that of its predecessor. *See, e.g., Industrial Phosphoric Acid from Israel; Final Results of Antidumping Duty Changed Circumstances Review*, 59 FR 6944, 6945 (February 14, 1994); and *Final Determination of Sales at Less Than Fair Value and Affirmative Final Determination of Critical Circumstances: Certain Orange Juice from Brazil*, 71 FR 2183 (January 13, 2006) and accompanying Issues and Decision Memorandum, at Comment 3. Thus, if the evidence demonstrates that, with respect to the production and sale of the subject merchandise, the new

[1] *See Initiation of Antidumping and Countervailing Duty Administrative Reviews and Deferral of Administrative Reviews*, 70 FR 72107 (December 1, 2005).

[2] *See Final Results of Antidumping Duty Administrative Review: Carbon and Certain Alloy Steel Wire Rod from Canada*, 71 FR 3822 (January 24, 2006).

[3] ''{G}enerally, in the case of an asset acquisition, the Department will consider the acquiring company to be a successor to the company covered by the antidumping duty order, and thus subject to its duty deposit rate, if the resulting operation is essentially similar to that existing before the acquisition.'' *Canadian Brass*, 57 FR at 20461.

company operates as the same business entity as the former company, the Department will accord the new company the same antidumping duty treatment as its predecessor.

Taking each condition in order, we begin with management. Ivaco reported that the key management personnel of both Ivaco Rolling Mills L.P. and Sivaco Ontario are identical to the management of each company after the acquisition. *See* Supplemental Questionnaire Response of Ivaco, at 1 and Appendices 1 and 2 (November 20, 2006). We find that the management structure has remained unchanged.

Second, we looked at the production facilities for subject merchandise. Ivaco explained that there have been no material changes to its operations or the way it produces or sells subject merchandise after the acquisition. *See* Section A Response, at Volume 1, page A–10 (January 12, 2006). We find that Ivaco's productions facilities have not changed as a result of the acquisition.

Third, we reviewed the supplier relationships before and after the change in ownership. Ivaco provided Ivaco Rolling Mills L.P.'s accounts payable records of its top 50 suppliers for the three month period leading up to the acquisition and the three month period immediately following the acquisition. Based on a comparison of these supplier lists, we determine that the vast majority of the suppliers are the same. Ivaco explained that the few supplier changes that did occur simply reflected changes in suppliers that take place in the normal course of business. Ivaco also provided Sivaco Ontario's accounts payable records of its top 10 suppliers for the same time periods. In this case, the suppliers are almost identical. *See* Supplemental Questionnaire Response of Ivaco, at 1–2 and Appendices 3 and 4 (November 20, 2006).

Fourth, we reviewed the customer base and find that the customer base is almost identical for both companies before and after the acquisition. Ivaco explained that the small changes that did occur in the customer base happened in the normal course of business. *See* Supplemental Questionnaire Response of Ivaco, at 2–3 and Appendices 5–7 (November 20, 2006).

In addition, we requested information about Ivaco's marketing and sales of products before and after the acquisition. Ivaco provided the distribution process and sales process from the 2003–2004 review, as well as the 2004–2005 review. We found that the processes remained unchanged. *See* Supplemental Questionnaire Response of Ivaco, at 3 and Appendix 8 (November 20, 2006). Further, Ivaco noted that products and services continue to be marketed under the Ivaco name because the Ivaco name was among the assets purchased by the entity. *See* Supplemental Questionnaire Response of Ivaco, at Volume 1, page 2 (July 7, 2006).

In summary, Ivaco reported that its acquisition did not meaningfully affect the production facilities, supplier relationships, customer base, management, marketing or sale of products and services by Ivaco Rolling Mills 2004 L.P. or Sivaco Wire Group 2004 L.P. Moreover, there have been no material changes to Ivaco's operations or the way it produces and sells subject merchandise resulting from the acquisition.

Based on Ivaco's evidence of the change in ownership and absent any other record evidence that would contradict Ivaco's statements, we preliminarily determine that Ivaco Rolling Mills 2004 L.P., and Sivaco Wire Group 2004 L.P. are the successor–in-interest to Ivaco Rolling Mills L.P. and Ivaco Inc. As a result, Ivaco Rolling Mills 2004 L.P., and Sivaco Ontario, a division of Sivaco Wire Group 2004 L.P., (collectively ''Ivaco'') should receive the same antidumping duty treatment with respect to carbon and certain alloy steel wire rod from Canada as Ivaco Rolling Mills L.P. and Ivaco Inc., respectively.

If the above preliminary results are affirmed in the Department's final results, the cash deposit rate most recently calculated for Ivaco Rolling Mills L.P. and Ivaco Inc. will apply to all entries of subject merchandise by Ivaco Rolling Mills 2004 L.P., and Sivaco Ontario, a division of Sivaco Wire Group 2004 L.P., entered, or withdrawn from warehouse, for consumption on or after the date of publication of the final results of this changed circumstances review. *See, e.g.*, *Granular Polytetraflouroethylene Resin from Italy; Final Results of Antidumping Duty Changed Circumstances Review*, 68 FR 25327 (May 12, 2003). This deposit rate shall remain in effect until publication of the final results of the next administrative review in which Ivaco participates.

Public Comment

Any interested party may request a hearing within 30 days of publication of this notice in accordance with 19 CFR 351.310(c). Interested parties may submit case briefs no later than 30 days after the date of publication of this notice, in accordance with 19 CFR 351.309(c)(1)(ii). Rebuttal briefs, which must be limited to issues raised in the case briefs, may be filed no later than 5 days after the case briefs, in accordance with 19 CFR 351.309(d)(1). Any hearing, if requested, will be held two days after rebuttal briefs are due, in accordance with 19 CFR 351.310(d)(1).

The Department will issue its final results of review within 270 days after the date on which the changed circumstances review is initiated, in accordance with 19 CFR 351.216(e), and will publish these results in the **Federal Register**.

The current requirement for a cash deposit of estimated antidumping duties on all subject merchandise will continue unless and until it is modified pursuant to the final results of this changed circumstances review.

This notice is published in accordance with sections 751(b)(1) and 777(i) of the Act and 19 CFR 351.216 of the Department's regulations.

Dated: December 6, 2006.

David M. Spooner,

Assistant Secretaryfor Import Administration.

[FR Doc. E6–21315 Filed 12–13–06; 8:45 am]

BILLING CODE 3510–DS–S

DEPARTMENT OF COMMERCE

International Trade Administration

(A–428–816)

Certain Cut–to-Length Carbon Steel Plate from Germany: Final Results of Antidumping Duty Administrative Review

AGENCY: Import Administration, International Trade Administration, Department of Commerce.

SUMMARY: On September 11, 2006, the Department of Commerce (the Department) published the preliminary results of the antidumping (AD) administrative review on certain cut–to-length carbon steel plate (CTL Plate) from Germany. The period of review (POR) is August 1, 2004, through July 31, 2005. *See Certain Cut–to-Length Carbon Steel Plate from Germany: Notice of Preliminary Results of Antidumping Duty Administrative Review*, 71 FR 53382 (September 11, 2006) (*Preliminary Results*). This review covers AG der Dillinger Huttenwerke, manufacturer of the subject merchandise, and its U.S. affiliate, Arcelor International America, LLC (AIA) (collectively, Dillinger).

Though Dillinger submitted comments, they did not warrant reconsideration of our preliminary results; therefore, our final results remain unchanged from our preliminary results. The final results are listed in the section *Final Results of Review* below.

EFFECTIVE DATE: December 14, 2006

FOR FURTHER INFORMATION CONTACT: Stephanie Moore or Dennis McClure, AD/CVD Operations, Office 3, Import Administration, International Trade Administration, U.S. Department of Commerce, 14th Street and Constitution Avenue, NW, Washington, DC 20230; telephone: (202) 482–3692 or (202) 482–5973, respectively.

SUPPLEMENTARY INFORMATION:

Background

On September 11, 2006, the Department published the preliminary results of the administrative review of the AD order on CTL Plate from Germany. *See Preliminary Results*, 71 FR 53382. This review covers imports of CTL Plate from Dillinger during the POR, August 1, 2004, through July 31, 2005. We invited interested parties to comment on the *Preliminary Results*.

On October 11, 2006, Dillinger commented that the Department should not make any changes to its *Preliminary Results*, and that the Department should continue to calculate a *de minimis* margin in the final. Alternatively, Dillinger stated that if the Department does make any adjustments that would increase the dumping margin above *de minimis*, then the Department should consider a list of suggestions or issues that Dillinger set forth. The petitioners did not comment on the *Preliminary Results*. Because the Department is not changing its preliminary results, we have not addressed Dillinger's alternative suggestions.

Scope of the Order

This order covers hot–rolled carbon steel universal mill plates (*i.e.*, flat–rolled products rolled on four faces or in a closed box pass, of a width exceeding 150 millimeters but not exceeding 1,250 millimeters and of a thickness of not less than 4 millimeters, not in coils and without patterns in relief), of rectangular shape, neither clad, plated, nor coated with metal, whether or not painted, varnished, or coated with plastics or other nonmetallic substances; and certain hot–rolled carbon steel flat–rolled products in straight lengths, of rectangular shape, hot rolled, neither clad, plated, nor coated with metal, whether or not painted, varnished, or coated with plastics or other nonmetallic substances, 4.75 millimeters or more in thickness and of a width which exceeds 150 millimeters and measures at least twice the thickness, as currently classifiable in the Harmonized Tariff Schedule of the United States (HTSUS) under item numbers 7208.40.3030, 7208.40.3060, 7208.51.0030, 7208.51.0045, 7208.51.0060, 7208.52.0000, 7208.53.0000, 7208.90.0000, 7210.70.3000, 7210.90.9000, 7211.13.0000, 7211.14.0030, 7211.14.0045, 7211.90.0000, 7212.40.1000, 7212.40.5000, 7212.50.0000. Included in the order are flat–rolled products of non–rectangular cross-section where such cross-section is achieved subsequent to the rolling process (*i.e.*, products which have been ''worked after rolling'') for example, products which have been beveled or rounded at the edges. Excluded from this order is grade X–70 plate. Also excluded is certain carbon cut–to-length steel plate with a maximum thickness of 80 mm in steel grades BS 7191, 355 EM, and 355 EMZ, as amended by Sable Offshore Energy Project specification XB MOO Y 15 0001 types 1 and 2.

These HTSUS item numbers are provided for convenience and customs purposes. The written descriptions remain dispositive.

Final Results of Review

As noted above, there have been no changes from the *Preliminary Results*, therefore, we are not attaching a Decision Memorandum to this **Federal Register** notice. For further details of the issues addressed in this proceeding, see the *Preliminary Results*.

As a result of this review, we find that the following weighted–average dumping margin exists:

Producer/Manufacturer	Weighted–Average Margin
Dillinger	0.16% (*i.e.*, *de minimis*)

Assessment Rates

The Department will determine, and Customs and Border Protection (CBP) shall assess, antidumping duties on all appropriate entries, pursuant to section 751(a)(1)(B) of the Tariff Act of 1930, as amended (the Act) and 19 CFR 351.212(b). The Department calculated importer–specific duty assessment rates on the basis of the ratio of the total antidumping duties calculated for the examined sales to the total entered value of the examined sales for that importer. Where the assessment rate is above *de minimis*, we will instruct CBP to assess duties on all entries of subject merchandise by that importer. The Department intends to issue assessment instructions to CBP 15 days after the date of publication of these final results of review.

The Department clarified its ''automatic assessment'' regulation on May 6, 2003 (68 FR 23954). This clarification will apply to entries of subject merchandise during the POR produced by Dillinger where Dillinger did not know its merchandise was destined for the United States. In such instances, we will instruct CBP to liquidate unreviewed entries at the all–others rate if there is no rate for the intermediate company(ies) involved in the transaction. For a full discussion of this clarification, *see* Antidumping and Countervailing Duty Proceedings: Assessment of Antidumping Duties, 68 FR 23954 (May 6, 2003).

Cash Deposit Requirements

Furthermore, the following deposit requirements will be effective upon publication of the final results of this administrative review for all shipments of CTL Plate from Germany entered, or withdrawn from warehouse, for consumption on or after the publication date of these final results, as provided by section 751(a) of the Act: (1) for the company covered by this review, the cash deposit rate will be zero; (2) for merchandise exported by producers or exporters not covered in this review, but covered in the investigation, the cash deposit rate will continue to be the company–specific rate established in the final determination; (3) if the exporter is not a firm covered in this review or the less–than-fair–value investigation, but the producer is, the cash deposit rate will be the rate established for the producer of the subject merchandise for the most recent period; and (4) if neither the exporter nor the producer is a firm covered in this review or the less–than-fair–value investigation, the cash deposit rate will be 36.00 percent, the ''All Others'' rate established in the less–than-fair–value investigation. *See Antidumping Duty Orders and Amendments to Final Determinations of Sales at Less Than Fair Value: Certain Hot–Rolled Carbon Steel Flat Products, Certain Cold–Rolled Carbon Steel Flat Products, Certain Corrosion–Resistant Carbon Steel Flat Products, and Certain Cut–to-Length Carbon Steel Plate From Germany*, 58 FR 44170 (August 19, 1993). These deposit requirements shall remain in effect until publication of the final results of the next administrative review.

Reimbursement of Duties

This notice also serves as a final reminder to importers of their responsibility under 19 CFR 351.402 (f)(2) to file a certificate regarding the reimbursement of antidumping and/or countervailing duties prior to liquidation of the relevant entries

during this review period. Failure to comply with this requirement could result in the presumption that reimbursement of antidumping and/or countervailing duties occurred and the subsequent increase in antidumping duties by the amount of antidumping and/or countervailing duties reimbursed.

Administrative Protective Orders

This notice also serves as a reminder to parties subject to administrative protective orders (APOs) of their responsibility concerning the return or destruction of proprietary information disclosed under APO in accordance with 19 CFR 351.305. Timely written notification of the return/destruction of APO materials or conversion to judicial protective order is hereby requested. Failure to comply with the regulations and terms of an APO is a violation that is subject to sanction.

We are issuing and publishing these results and notice in accordance with sections 751(a)(1) and 777(i)(1) of the Act.

Dated: December 7, 2006.

David M. Spooner,

Assistant Secretaryfor Import Administration.

[FR Doc. E6–21326 Filed 12–13–06; 8:45 am]

BILLING CODE 3510–DS–S

DEPARTMENT OF COMMERCE

International Trade Administration

Notice of Creation of U.S.–Iraq Business Dialogue

AGENCY: International Trade Administration, Department of Commerce.

ACTION: Amendment to Prior Notice.

SUMMARY: The U.S. Department of Commerce and the Iraqi Ministry of Trade have established the U.S.–Iraq Business Dialogue (Business Dialogue or Dialogue). This notice announces an amendment extending the deadline for applications for American representatives to join the U.S. section of the Dialogue.

DATES: Applications must be received no later than December 28, 2006.

ADDRESSES: Please send requests for consideration to Ms. Susan Hamrock, Director, Iraq Investment and Reconstruction Task Force, U.S. Department of Commerce, either by fax on 202–482–0980 or by mail to U.S. Department of Commerce, 14th and Constitution Avenue, NW., Mail Stop 3868, Washington, DC 20230.

FOR FURTHER INFORMATION CONTACT: Mr. Aaron Kleiner, Office of the Middle East, U.S. Department of Commerce, Room 2029–B, Washington, DC 20230. Phone: 202–482–2680.

SUPPLEMENTARY INFORMATION: On October 30, 2006, the International Trade Administration of the U.S. Department of Commerce published a **Federal Register** notice soliciting applications from U.S. persons interested in serving as members of the U.S. Section of the U.S.–Iraq Business Dialogue. *See* 71 FR 63286. The International Trade Administration of the U.S. Department of Commerce is amending the previous notice due to the level of interest in the Dialogue and to attract applicants from a more diverse geographic base, including applicants located in the Middle East. Applicants must meet the requirements put forward in the previous notice. *See* 71 FR 63286.

Dated: December 11, 2006.

Susan Hamrock,

Director, Iraq Investment and Reconstruction Task Force.

[FR Doc. E6–21288 Filed 12–13–06; 8:45 am]

BILLING CODE 3510–DA–P

DEPARTMENT OF COMMERCE

National Oceanic and Atmospheric Administration

Availability of Seats for the Florida Keys National Marine Sanctuary Advisory Council

AGENCY: National Marine Sanctuary Program (NMSP), National Ocean Service (NOS), National Oceanic and Atmospheric Administration (NOAA), Department of Commerce (DOC).

ACTION: Notice and request for applications.

SUMMARY: The Florida Keys National Marine Sanctuary (FKNMS)) is seeking applications for the following vacant seats on its Sanctuary Advisory Council (council): Boating, Citizen-at-Large (upper Keys), Diving (alternate), Citizen-at-Large (middle Keys, alternate), Conservaiton & Environment (alternate), Recreational Fishing, Recreational Fishing (alternate), Research & Monitoring (alternate), Elected Official (alternate), Charter Fishing (sports). Applicants are chosen based upon their particular expertise and experience in relation to the seat for which they are applying; community and professional affiliations; philosophy regarding the protection and management of marine resources; and possibly the length of residence in the area affected by the sanctuary. Applicants who are chosen as members should expect to serve three-year terms, pursuant to the Council's charter.

DATES: Applications are due by January 12, 2007.

ADDRESSES: Application kits may be obtained from the Advisory Council Coordinator at *Fiona.Wilmot@noaa.gov,* from the Web site at *www.floridakeys.noaa.gov,* by telephone at (305)–395–0194 or in writing at 2513 Granada Circle East, St. Petersburg, FL 33712 or any of the FKNMS offices listed on the Web site. Completed applications should be sent to the same address listed above.

FOR FURTHER INFORMATION CONTACT: Fiona Wilmot at the above address, e-mail and telephone number.

SUPPLEMENTARY INFORMATION: Information concerning the council, including past meeting minutes and member contact information can be found at the sanctuary Web site.

Authority: 16 U.S.C. Sections 1431, *et seq.*

(Federal Domestic Assistance Catalog Number 11.429 Marine Sanctuary Program)

Dated: December 7, 2006.

Daniel J. Basta,

Director, National Marine Sanctuary Program, National Ocean Service, National Oceanic and Atmospheric Administration.

[FR Doc. 06–9675 Filed 12–13–06; 8:45 am]

BILLING CODE 3510–NK–M

DEPARTMENT OF COMMERCE

National Oceanic and Atmospheric Administration

[I.D. 121106A]

Magnuson-Stevens Act Provisions; General Provisions for Domestic Fisheries; Application for Exempted Fishing Permits

AGENCY: National Marine Fisheries Service (NMFS), National Oceanic and Atmospheric Administration (NOAA), Commerce.

ACTION: Notice; receipt of exempted fishing permit application.

SUMMARY: The Assistant Regional Administrator for Sustainable Fisheries, Northeast Region, NMFS (Assistant Regional Administrator) has made a preliminary determination that the subject exempted fishing permit (EFP) application contains all the required information and warrants further consideration. The Assistant Regional Administrator has also made a preliminary determination that the activities authorized under the EFP would be consistent with the goals and objectives of the Northeast (NE)

Multispecies Fishery Management Plan (FMP). However, further review and consultation may be necessary before a final determination is made to issue the EFP. Therefore, NMFS announces that the Assistant Regional Administrator proposes to recommend that an EFP be issued that would allow three commercial fishing vessels to conduct fishing operations that are otherwise restricted by the regulations governing the fisheries of the Northeastern United States. The EFP, which would enable researchers to investigate the efficacy of an experimental trawl designed to reduce the bycatch of cod while maintaining selectivity for haddock, would allow for exemptions from the FMP as follows: U.S./Canada Management Area gear requirements for trawl nets, U.S./Canada Management Area harvest control regulations, and NE multispecies possession restrictions. Regulations under the Magnuson-Stevens Fishery Conservation and Management Act require publication of this notification to provide interested parties the opportunity to comment on applications for proposed EFPs.

DATES: Comments must be received on or before December 29, 2006.

ADDRESSES: Written comments should be sent to Patricia A. Kurkul, Regional Administrator, NMFS, Northeast Regional Office, 1 Blackburn Drive, Gloucester, MA 01930. Mark the outside of the envelope ''Comments on the Massachusetts Haddock Trawl Study.'' Comments may also be sent via facsimile (fax) to (978) 281–9135, or submitted via e-mail to the following address: *DA6347@noaa.gov*.

FOR FURTHER INFORMATION CONTACT: Tobey Curtis, Fishery Management Specialist, (978) 281–9273, fax (978) 281–9135.

SUPPLEMENTARY INFORMATION: A complete application for an EFP was submitted on November 15, 2006, by David Chosid and Michael Pol of the Massachusetts Division of Marine Fisheries (DMF). The project was funded by the DMF/University of Massachusetts, Dartmouth, School for Marine Science and Technology, Marine Fisheries Institute grant program. The primary goal of the research is to test the effectiveness of a sweepless raised footrope trawl, designed to minimize the catch of Atlantic cod while maximizing the catch of haddock. The intent of the researchers is that the experimental net, if successful, could potentially be an acceptable alternative trawl design to be used in the groundfish fishery.

The project is a continuation of research previously conducted in 2006 by DMF, which has preliminarily shown that this new trawl net design significantly reduces the bycatch of cod, as compared to the standard legal trawl. Specifically, DMF will test the effectiveness of a sweepless (no ground gear) raised footrope, semi-pelagic trawl, referred to as the ''5–point trawl.'' The net was designed to exploit the differences in behavior of haddock and cod in relation to towed gears. Similar to the haddock separator trawl, this experimental net proposes to reduce cod mortality; however, it avoids some of the complexities associated with separator trawls, since the cod would not pass through meshes, or encounter grids or escape vents. Although this study would focus on reducing cod-haddock interactions, this net may also reduce the bycatch of flatfish species such as winter flounder, yellowtail flounder, witch flounder, and American plaice.

The species of principal interest in the study are cod and haddock, but the study will also have implications for flatfishes, including yellowtail flounder, winter flounder, witch flounder, and American plaice. All fish would be sorted and weighed, and fish of legal size would be retained for sale. All discards would be released as quickly as practicable to reduce incidental mortality. Based on catch data from previous experimental tows with this net design, the researchers anticipate that a total of 34 mt (74,957 lb) of fish would be harvested throughout the course of the study. All proceeds from the sale of the fish would be returned to DMF for the purpose of enhancing future research.

All at-sea research would be conducted from three fishing vessels. The vessels intend to fish in the Eastern and Western U.S./Canada Management Areas. The vessel would fish exclusively outside of all closed areas. A total of 21 days would be used for testing the experimental trawls, carried out under NE multispecies Category A Days-at-Sea. An anticipated 120, 2-hour tows, using a twin trawl rig, would be conducted during that time. This effort would result in a total of 240 hours of bottom time for the experimental trawls. DMF staff would be aboard the vessel at all times during testing.

Based on preliminary review of this project, and in accordance with NOAA Administrative Order 216–6, a Categorical Exclusion from requirements to prepare either an Environmental Impact Statement or an Environmental Assessment under the National Environmental Policy Act appears to be justified. The applicant may request minor modifications and extensions to the EFP throughout the year. EFP modifications and extensions may be granted without further notice if they are deemed essential to facilitate completion of the proposed research and have minimal impacts that do not change the scope or impact of the initially approved EFP request.

Authority: 16 U.S.C. 1801 *et seq.*

Dated: December 11, 2006.

Alan D. Risenhoover,

Director, Office of Sustainable Fisheries, National Marine Fisheries Service.

[FR Doc. E6–21275 Filed 12–13–06; 8:45 am]

BILLING CODE 3510–22–S

DEPARTMENT OF COMMERCE

National Oceanic and Atmospheric Administration

[I.D. 113006B]

Marine Mammals

AGENCY: National Marine Fisheries Service (NMFS), National Oceanic and Atmospheric Administration (NOAA), Commerce.

ACTION: Notice; availability of new criteria for designation of marine mammal Unusual Mortality Events (UMEs).

SUMMARY: The National Marine Fisheries Service (NMFS) announces new criteria developed by the Working Group on Marine Mammal Unusual Mortality Events (Working Group) to help determine when a marine mammal Unusual Mortality Event (UME) is occurring.

FOR FURTHER INFORMATION CONTACT: Teri Rowles, D.V.M., Ph.D. or Trevor Spradlin, NMFS, Marine Mammal Health and Stranding Response Program, Office of Protected Resources; telephone: (301) 713–2322; fax: (301) 427–2522.

SUPPLEMENTARY INFORMATION:

Background

Marine mammals strand for a variety of reasons. Some identified causes include: infectious disease (*e.g.*, viral, bacterial, parasitic), non-infectious disease (*e.g.*, stress, starvation, exposure to biotoxins or contaminants.), physical trauma (*e.g.*, ship strikes, entanglements, predation, acoustic sources), behavioral changes (*e.g.*, associated with prey shifts, social cohesiveness), weather and oceanographic conditions (*e.g.*, hurricanes, tsunamis, El Nino), to name a few (Geraci *et al.*, 1999; Dierauf and Gulland, 2001; Geraci and Lounsbury, 2005). Title IV of the Marine Mammal

Protection Act (MMPA, 16 U.S.C. 1361 *et seq.*) defines a set of multiple strandings to be part of an ''Unusual Mortality Event'' (UME) if it has the following characteristics: (1) It is unexpected; (2) involves a significant die-off of any marine mammal population; and (3) demands an immediate response. In recent years, increased efforts to examine carcasses and live stranded animals and new diagnostic capabilities have improved our knowledge of mortality rates, patterns, and causes, allowing us to better understand population threats and stressors and to determine when a situation is ''unusual.'' These advancements have contributed significantly to conservation efforts for marine mammals. Understanding and investigating marine mammal UMEs is also important because they can serve as indicators of ocean status or health, giving us insight into larger environmental issues which also may have implications for human health and welfare (Reddy *et al.*, 2001; Wells *et al.*, 2004) and population management. From 1991 through 2006, there have been 37 formally recognized UMEs in the United States involving either single or multiple species and dozens to hundreds of individual marine mammals per event.

The Working Group on Marine Mammal Unusual Mortality Events

The National Marine Fisheries Service (NMFS) or the U.S. Fish and Wildlife Service (USFWS) formally declare an UME upon the recommendation of the Working Group on Marine Mammal Unusual Mortality Events (The Working Group or WGMMUME). The Working Group was first established in 1991 by NMFS in response to large numbers of marine mammal mortalities in the late 1980s involving humpback whales in the Northeast U.S., bottlenose dolphins along the Atlantic coast and the Exxon Valdez oil spill (Geraci *et al.*, 1999; Dierauf and Gulland, 2001; Gulland, 2006), and was formalized when Congress passed the 1992 amendments to the MMPA as the Marine Mammal Health and Stranding Response Act. As statutorily defined, the Working Group's primary role is to determine when an UME is occurring and to help direct the response and investigation. From 1991 through 2006, the Working Group has consulted on 37 marine mammal UMEs throughout the United States involving numerous species of cetaceans (whales, dolphins and porpoises), pinnipeds (seals, sea lions), manatees and sea otters (Gulland, 2006).

The Working Group is comprised of members from scientific and academic institutions, conservation organizations, and state and/or Federal agencies who have a wide variety of expertise in biology, toxicology, medicine, pathology, ecology, and/or epidemiology. The members are appointed for three-year terms and meet annually in person, and engage in discussions throughout the year by e-mail or conference call to review and consult on individual cases, events, or disease issues. In addition to the core members, there are two international participants (one from Canada and one from Mexico) and Federal Government representatives (currently including NMFS, the U.S. Fish and Wildlife Service (USFWS) and Marine Mammal Commission) who, although they have no voting privileges, contribute significantly to the data reviews, internal discussions, sample analyses, and overall UME investigations. Responses to UMEs are coordinated by either the NMFS or USFWS Regional Offices depending on the species (NMFS has jurisdiction for all cetaceans and most pinnipeds (seals and sea lions), whereas USFWS has jurisdiction for walrus, sea otters, manatees and polar bears) and the regional stranding networks, as well as other Federal, state and local agencies. Investigation of such events has led to a greater understanding of the impacts of human-related and natural causes of mortality in marine mammal populations.

In order to determine whether an UME is occurring, the Working Group developed seven criteria to evaluate mortality events, which were published in the National Contingency Plan for Response to Unusual Marine Mammal Mortality Events (Wilkinson 1996):

(1) A marked increase in the magnitude of strandings when compared with prior records.

(2) Animals are stranding at a time of the year when strandings are unusual.

(3) An increase in strandings is occurring in a very localized area (possibly suggesting a localized problem), is occurring throughout the geographical range of the species/population, or spreads geographically with time.

(4) The species, age, or sex composition of the stranded animals is different than that of animals that normally strand in the area at that time of the year.

(5) Stranded animals exhibit similar or unusual pathologic findings or the general physical condition (e.g., blubber thickness) of stranded animals is different from what is normally seen.

(6) Mortality is accompanied by behavior patterns observed among living individuals in the wild that are unusual, such as occurrence in habitats normally avoided or abnormal patterns of swimming and diving.

(7) Critically endangered species are stranding. Stranding of three or four right whales, for example, may be cause for great concern whereas stranding of a similar number of fin whales may not.

The Working Group considers that a single criterion or combination of criteria may indicate the occurrence of an UME.

The process of declaring an UME involves the Working Group reviewing all available information on the event within 24 hours of receiving a request for a formal consultation from concerned stakeholders (e.g., government officials, the marine mammal stranding network, scientific researchers, wildlife conservation organizations, etc.). The Working Group reviews historical stranding data and current population trends for the species of marine mammals involved, as well as environmental factors. After the Working Group announces their decision, which is achieved by a majority vote from a quorum of responders, NMFS or USFWS (depending on which agency has jurisdiction) has an additional 24 hours to officially declare the event an UME and appoint an Onsite Coordinator to oversee and administer the investigation. If an UME is declared, the Working Group will provide advice on how the investigation should be conducted, and individual members may serve on the investigation team. When an UME is officially declared, money from the Marine Mammal Unusual Mortality Event Fund may be made available to help reimburse some of the ''special costs'' incurred during the investigation as specified in Section 405 of the MMPA and the *National Contingency Plan for Response to Unusual Marine Mammal Mortality Events* (Wilkinson 1996).

New Criteria for Determining Marine Mammal UMEs

At the Working Group's 2004 annual meeting, the members reevaluated the original seven criteria used to determine an UME and have revised them to include morbidity, pathology and population-level declines in an effort to improve detection of events that could have significant impacts on populations of marine mammals (e.g., unusual disease outbreaks that do not necessarily result in mortalities). Steady declines in population abundance can influence numbers of animals detected by the stranding network, this in turn influencing the likelihood of a stranding event being declared ''unusual'' under

the current criteria. An emphasis on considering mortalities in the current criteria may also delay a response that could be crucial to identify causal factors. Elevating the importance of ''morbidity'' could initiate consideration of an UME sooner, and improve the effectiveness of a subsequent investigation. Therefore, the UME criteria have been revised as follows:

(1) A marked increase in the magnitude or a marked change in the nature of morbidity, mortality or strandings when compared with prior records.

(2) A temporal change in morbidity, mortality or strandings is occurring.

(3) A spatial change in morbidity, mortality or strandings is occurring.

(4) The species, age, or sex composition of the affected animals is different than that of animals that are normally affected.

(5) Affected animals exhibit similar or unusual pathologic findings, behavior patterns, clinical signs, or general physical condition (e.g., blubber thickness).

(6) Potentially significant morbidity, mortality or stranding is observed in species, stocks or populations that are particularly vulnerable (e.g., listed as depleted, threatened or endangered or declining). For example, stranding of three or four right whales may be cause for great concern whereas stranding of a similar number of fin whales may not.

(7) Morbidity is observed concurrent with or as part of an unexplained continual decline of a marine mammal population, stock, or species.

As with the original criteria, the Working Group considers whether a single criterion or combination of the revised criteria may indicate the occurrence of an UME. The Working Group agreed to use the revised criteria on a pilot basis beginning in July 2004 and evaluate their utility after applying them to several consultation requests throughout 2005 and 2006. The Working Group has since determined that the revised criteria have been more applicable to current stranding events than the original criteria and has voted to adopt them as the new official UME criteria to be used for all future consultations (or until such time when they are reevaluated and revised again).

Additional information on the MMHSRP and UME program, including frequent updates, can be found on the Internet at: *http://www.nmfs.noaa.gov/pr/health/*

Authority: 16 U.S.C. 1361 *et seq.*

References

Dierauf, L.A. and F.M.D. Gulland. 2001. Marine Mammal Unusual Mortality Events. In: L.A.Dierauf and F.M.D. Gulland (Eds.), Handbook of Marine Mammal Medicine. CRC Press, Boca Raton, Florida. Pgs. 69–81.

Geraci, J.R., J.H. Harwood and V.J. Lounsbury. 1999. Marine Mammal Die-Offs: Causes, Investigations, and Issues. In: J.R. Twiss, Jr. and R.R. Reeves (Eds.), Conservation and Management of Marine Mammals. Smithsonian Institution Press, Washington, D.C. Pgs. 367–395.

Geraci, J.R. and V.J. Lounsbury. 2005. Marine Mammals Ashore: A Field Guide for Strandings, Second Edition. National Aquarium in Baltimore, Baltimore, MD. 371 pp.

Gulland, F.M.D. 2006. Review of the Marine Mammal Unusual Mortality Event Response Program of the National Marine Fisheries Service. Report to the Office of Protected Resources, NOAA/National Marine Fisheries Service, Silver Spring, MD. 32 pp.

Reddy, M.L., L.A. Dierauf and F.M.D. Gulland. 2001. Marine Mammals as Sentinels of Ocean Health. In: L.A. Dierauf and F.M.D. Gulland (Eds.), Handbook of Marine Mammal Medicine. CRC Press, Boca Raton, Florida. Pgs. 3–13.

Wells, R.S., H.L. Rhinehart, L.J. Hansen, J.C. Sweeney, F.I. Townsend, R. Stone, D.R. Casper, M.D. Scott, A.A. Hohn and T.K. Rowles. 2004. Bottlenose dolphins as marine ecosystem sentinels: Developing a health monitoring system. EcoHealth, 1: 246–254.

Wilkinson, D.M. 1996. National Contingency Plan for Response to Unusual Marine Mammal Mortality Events. NOAA Tech. Memo. NMFS-OPR–9. 118 pp.

Dated: December 8, 2006.

James H. Lecky,

Director, Office of Protected Resources, National Marine Fisheries Service.

[FR Doc. E6–21300 Filed 12–13–06; 8:45 am]

BILLING CODE 3510–22–S

DEPARTMENT OF DEFENSE

GENERAL SERVICES ADMINISTRATION

NATIONAL AERONAUTICS AND SPACE ADMINISTRATION

[OMB Control No. 9000–0094]

Federal Acquisition Regulation; Information Collection; Debarment and Suspension

AGENCIES: Department of Defense (DOD), General Services Administration (GSA), and National Aeronautics and Space Administration (NASA).

ACTION: Notice of request for public comments regarding an extension to an existing OMB clearance.

SUMMARY: Under the provisions of the Paperwork Reduction Act of 1995 (44 U.S.C. Chapter 35), the Federal Acquisition Regulation (FAR) Secretariat will be submitting to the Office of Management and Budget (OMB) a request to review and approve an extension of a currently approved information collection requirement concerning debarment and suspension. The OMB clearance expires March 31, 2007.

DATES: Submit comments on or before February 12, 2007.

ADDRESSES: Submit comments regarding this burden estimate or any other aspect of this collection of information, including suggestions for reducing this burden to the General Services Administration, FAR Secretariat (VIR), 1800 F Street, NW, Room 4035, Washington, DC 20405. Please cite OMB Control No.9000–0094, Debarment and Suspension, in all correspondence.

FOR FURTHER INFORMATION CONTACT: William Clark, Contract Policy Division, GSA (202) 219–1813.

SUPPLEMENTARY INFORMATION:

A. Purpose

The FAR requires contracts to be awarded to only those contractors determined to be responsible. Instances where a firm or its principals have been indicted, convicted, suspended, proposed for debarment, debarred, or had a contract terminated for default are critical factors to be considered by the contracting officer in making a responsibility determination. This certification requires the disclosure of this information.

B. Annual Reporting Burden

Respondents: 89,995.
Responses per respondent: 12.223.
Total Responses: 1,100,000.
Hours Per Response: 0.0833 hrs.
Total Burden Hours: 91,667.
Obtaining Copies of Proposals: Requesters may obtain a copy of the information collection documents from the General Services Administration, FAR Secretariat (VIR), Room 4035, Washington, DC 20405, telephone (202) 501–4755. Please cite OMB Control No. 9000–0094, Debarment and Suspension, in all correspondence.

Dated: December 11, 2006.

Ralph De Stefano,

Director, Contract Policy Division.

[FR Doc. 06–9702 Filed 12–13–06; 8:45 am]

BILLING CODE 6820–EP–S

DEPARTMENT OF EDUCATION

Submission for OMB Review; Comment Request

AGENCY: Department of Education.

SUMMARY: The Acting Leader, Information Policy and Standards Team, Regulatory Information Management Services, Office of Management invites comments on the submission for OMB review as required by the Paperwork Reduction Act of 1995.

DATES: Interested persons are invited to submit comments on or before January 16, 2007.

ADDRESSES: Written comments should be addressed to the Office of Information and Regulatory Affairs, Attention: Rachel Potter, Desk Officer, Department of Education, Office of Management and Budget, 725 17th Street, NW., Room 10222, New Executive Office Building, Washington, DC 20503 or faxed to (202) 395–6974.

SUPPLEMENTARY INFORMATION: Section 3506 of the Paperwork Reduction Act of 1995 (44 U.S.C. Chapter 35) requires that the Office of Management and Budget (OMB) provide interested Federal agencies and the public an early opportunity to comment on information collection requests. OMB may amend or waive the requirement for public consultation to the extent that public participation in the approval process would defeat the purpose of the information collection, violate State or Federal law, or substantially interfere with any agency's ability to perform its statutory obligations. The Acting Leader, Information Policy and Standards Team, Regulatory Information Management Services, Office of Management, publishes that notice containing proposed information collection requests prior to submission of these requests to OMB. Each proposed information collection, grouped by office, contains the following: (1) Type of review requested, *e.g.* new, revision, extension, existing or reinstatement; (2) Title; (3) Summary of the collection; (4) Description of the need for, and proposed use of, the information; (5) Respondents and frequency of collection; and (6) Reporting and/or Recordkeeping burden. OMB invites public comment.

Dated: December 8, 2006.

Dianne M. Novick,

Acting Leader, Information Policy and Standards Team, Regulatory Information Management Services, Office of Management.

Institute of Education Sciences

Type of Review: Reinstatement.

Title: National Postsecondary Student Aid Study: 2008.

Frequency: On Occasion.

Affected Public: Individuals or household; Businesses or other for-profit; Not-for-profit institutions.

Reporting and Recordkeeping Hour Burden:

Responses: 1,933.

Burden Hours: 4,016.

Abstract: The 2008 National Postsecondary Student Aid Study is being conducted to meet the continuing need for national-level data about significant financial aid issues for students enrolling in postsecondary education. Information about financial aid policies and postsecondary affordability is critical to policymakers who determine the need analysis formulas for Pell Grants, maximum amounts for student loans and other need-based Federal programs.

Requests for copies of the information collection submission for OMB review may be accessed from *http://edicsweb.ed.gov,* by selecting the ''Browse Pending Collections'' link and by clicking on link number 3208. When you access the information collection, click on ''Download Attachments '' to view. Written requests for information should be addressed to U.S. Department of Education, 400 Maryland Avenue, SW., Potomac Center, 9th Floor, Washington, DC 20202–4700. Requests may also be electronically mailed to *ICDocketMgr@ed.gov* or faxed to 202–245–6623. Please specify the complete title of the information collection when making your request.

Comments regarding burden and/or the collection activity requirements should be electronically mailed to *ICDocketMgr@ed.gov.* Individuals who use a telecommunications device for the deaf (TDD) may call the Federal Information Relay Service (FIRS) at 1–800–877–8339.

[FR Doc. E6–21334 Filed 12–13–06; 8:45 am]

BILLING CODE 4000–01–P

DEPARTMENT OF EDUCATION

Notice of Proposed Information Collection Requests

AGENCY: Department of Education.

SUMMARY: The Acting Leader, Information Policy and Standards Team, Regulatory Information Management Services, Office of Management, invites comments on the proposed information collection requests as required by the Paperwork Reduction Act of 1995.

DATES: Interested persons are invited to submit comments on or before February 12, 2007.

SUPPLEMENTARY INFORMATION: Section 3506 of the Paperwork Reduction Act of 1995 (44 U.S.C. Chapter 35) requires that the Office of Management and Budget (OMB) provide interested Federal agencies and the public an early opportunity to comment on information collection requests. OMB may amend or waive the requirement for public consultation to the extent that public participation in the approval process would defeat the purpose of the information collection, violate State or Federal law, or substantially interfere with any agency's ability to perform its statutory obligations. The Acting Leader, Information Policy and Standards Team, Regulatory Information Management Services, Office of Management, publishes that notice containing proposed information collection requests prior to submission of these requests to OMB. Each proposed information collection, grouped by office, contains the following: (1) Type of review requested, e.g. new, revision, extension, existing or reinstatement; (2) Title; (3) Summary of the collection; (4) Description of the need for, and proposed use of, the information; (5) Respondents and frequency of collection; and (6) Reporting and/or recordkeeping burden. OMB invites public comment.

The Department of Education is especially interested in public comment addressing the following issues: (1) Is this collection necessary to the proper functions of the Department; (2) will this information be processed and used in a timely manner; (3) is the estimate of burden accurate; (4) how might the Department enhance the quality, utility, and clarity of the information to be collected; and (5) how might the Department minimize the burden of this collection on the respondents, including through the use of information technology.

Dated: December 11, 2006.

Dianne M. Novick,

Acting Leader, Information Policy and Standards Team, Regulatory Information Management Services, Office of Management.

Office of the Chief Financial Officer

Type of Review: Extension.

Title: Streamlined Clearance Process for Discretionary Grant Information Collections.

Frequency: Annually.

Affected Public: Not-for-profit institutions.

Reporting and Recordkeeping Hour Burden:

Responses: 1.

Burden Hours: 1.

Abstract: The information collection plan provides the U.S. Department of Education with the procedure of submitting its discretionary grant information collections through a streamlined Paperwork Reduction Act clearance process which does not fit under the Generic Application (1890–0009). This streamlined clearance process has been in effect for the last eight years. By streamlining the clearance process, the Department has reduced burden on the public. Instead of publishing two separate **Federal Register** notices, the Department limits public responsibilities to only one response period. Public acceptance has been positive.

Requests for copies of the proposed information collection request may be accessed from *http://edicsweb.ed.gov,* by selecting the ''Browse Pending Collections'' link and by clicking on link number 3240. When you access the information collection, click on ''Download Attachments'' to view. Written requests for information should be addressed to U.S. Department of Education, 400 Maryland Avenue, SW., Potomac Center, 9th Floor, Washington, DC 20202–4700. Requests may also be electronically mailed to *ICDocketMgr@ed.gov* or faxed to 202–245–6623. Please specify the complete title of the information collection when making your request.

Comments regarding burden and/or the collection activity requirements should be electronically mailed to *ICDocketMgr@ed.gov.* Individuals who use a telecommunications device for the deaf (TDD) may call the Federal Information Relay Service (FIRS) at 1–800–877–8339.

[FR Doc. E6–21336 Filed 12–13–06; 8:45 am]

BILLING CODE 4000–01–P

DEPARTMENT OF EDUCATION

Notice of Proposed Information Collection Requests

AGENCY: Department of Education.

SUMMARY: The Acting Leader, Information Policy and Standards Team, Regulatory Information Management Services, Office of Management, invites comments on the proposed information collection requests as required by the Paperwork Reduction Act of 1995.

DATES: Interested persons are invited to submit comments on or before February 12, 2007.

SUPPLEMENTARY INFORMATION: Section 3506 of the Paperwork Reduction Act of 1995 (44 U.S.C. Chapter 35) requires that the Office of Management and Budget (OMB) provide interested Federal agencies and the public an early opportunity to comment on information collection requests. OMB may amend or waive the requirement for public consultation to the extent that public participation in the approval process would defeat the purpose of the information collection, violate State or Federal law, or substantially interfere with any agency's ability to perform its statutory obligations. The Acting Leader, Information Policy and Standards Team, Regulatory Information Management Services, Office of Management, publishes that notice containing proposed information collection requests prior to submission of these requests to OMB. Each proposed information collection, grouped by office, contains the following: (1) Type of review requested, e.g. new, revision, extension, existing or reinstatement; (2) Title; (3) Summary of the collection; (4) Description of the need for, and proposed use of, the information; (5) Respondents and frequency of collection; and (6) Reporting and/or Recordkeeping burden. OMB invites public comment.

The Department of Education is especially interested in public comment addressing the following issues: (1) Is this collection necessary to the proper functions of the Department; (2) will this information be processed and used in a timely manner; (3) is the estimate of burden accurate; (4) how might the Department enhance the quality, utility, and clarity of the information to be collected; and (5) how might the Department minimize the burden of this collection on the respondents, including through the use of information technology.

Dated: December 8, 2006.

Dianne M. Novick,

Acting Leader, Information Policy and Standards Team, Regulatory Information Management Services, Office of Management.

Federal Student Aid

Type of Review: Extension.

Title: Guaranty Agency Financial Report.

Frequency: Monthly, Annually.

Affected Public: State, Local, or Tribal Gov't, SEAs or LEAs; Businesses or other for-profit.

Reporting and Recordkeeping Hour Burden:

Responses: 612.

Burden Hours: 33,660.

Abstract: The Guaranty Agency Financial Report is used to request payments from and make payments to the Department of Education under the Federal Family Education Loan (FFEL) Program authorized by Title IV, Part B of the Higher Education Act of 1965, as amended (HEA). The report is also used to monitor the agency's financial activities, including activities concerning its Federal fund; operating fund and the agency's restricted account.

Requests for copies of the proposed information collection request may be accessed from *http://edicsweb.ed.gov,* by selecting the ''Browse Pending Collections'' link and by clicking on link number 3239. When you access the information collection, click on ''Download Attachments'' to view. Written requests for information should be addressed to U.S. Department of Education, 400 Maryland Avenue, SW., Potomac Center, 9th Floor, Washington, DC 20202–4700. Requests may also be electronically mailed to *ICDocketMgr@ed.gov* or faxed to 202–245–6623. Please specify the complete title of the information collection when making your request.

Comments regarding burden and/or the collection activity requirements should be electronically mailed to *ICDocketMgr@ed.gov.* Individuals who use a telecommunications device for the deaf (TDD) may call the Federal Information Relay Service (FIRS) at 1–800–877–8339.

[FR Doc. E6–21337 Filed 12–13–06; 8:45 am]

BILLING CODE 4000–01–P

DEPARTMENT OF ENERGY

Federal Energy Regulatory Commission

[Docket No. IC07–580–000; FERC 580]

Commission Information Collection Activities, Proposed Collection; Comment Request; Extension

December 7, 2006.

AGENCY: Federal Energy Regulatory Commission, DOE.

ACTION: Notice.

SUMMARY: In compliance with the requirements of section 3506(c)(2)(a) of the Paperwork Reduction Act of 1995 (Pub. L. No. 104–13), the Federal Energy Regulatory Commission (Commission) is soliciting public comment on the specific aspects of the information collection described below.

DATES: Comments on the collection of information are due February 16, 2007.

ADDRESSES: Copies of sample filings of the proposed collection of information can be obtained from the Commission's Web site (*http://www.ferc.gov/docs-filings/elibrary.asp*) or from the Federal

Energy Regulatory Commission, Attn: Michael Miller, Office of the Executive Director, ED–34, 888 First Street, NE., Washington, DC 20426. Comments may be filed either in paper format or electronically. Those parties filing electronically do not need to make a paper filing. For paper filing, the original and 14 copies of such comments should be submitted to the Secretary of the Commission, Federal Energy Regulatory Commission, 888 First Street, NE., Washington, DC 20426 and refer to Docket No. IC07–580–000.

Documents filed electronically via the Internet must be prepared in WordPerfect, MS Word, Portable Document Format, or ASCII format. To file the document, access the Commission's Web site at *http://www.ferc.gov* and click Documents and Filing tab, then choose eFiling from the drop-down menu. Follow the instructions provided. First time users will have to establish a user name and password. The Commission will send an automatic acknowledgement to the sender's e-mail address upon receipt of comments.

All comments may be viewed, printed or downloaded remotely via the Internet through the Commission's homepage using the eLibrary link. For user assistance, contact *FERCOlineSupport@ferc.gov* or toll-free at (866) 208–3676 or for TTY, contact (202) 502–8659.

FOR FURTHER INFORMATION CONTACT: Michael Miller may be reached by telephone at (202) 502–8415, by fax at (202) 273–0873, and by e-mail at *michael.miller@ferc.gov.*

SUPPLEMENTARY INFORMATION: The information collected under the requirements of FERC Form No. 580 ''Interrogatory on Fuel and Energy Purchase Practices, Docket No. IN79–6''—(OMB No. 1902–0137) is used by the Commission to carry out its responsibilities in implementing the statutory provisions of the Federal Power Act (FPA). The FPA was amended by the Public Utility Regulatory Policies Act (49 Stat. 851; 16 U.S.C. 824d) to require the Commission to review ''not less frequently than every two (2) years * * * of practices * * * to ensure efficient use of resources (including economical purchase and use of fuel and electric energy) * * *'' The collection of this information is specifically required by Federal statute (FPA Section 205(f)) and thus the Commission lacks authority to allow waivers for the filing of this information. In addition, the Commission entertains requests for confidential treatment pursuant to 18 CFR 388.112 for the coal mine price data and coal rail transportation cost data submitted in response to questions 3(i) and 3(1.2), respectively, only when disclosure would violate the terms of a confidentiality clause of a rail transportation contract. No other requests for confidential treatment are considered. The information is used to: (1) Review as mandated by statute, fuel purchase and cost recovery practices to ensure efficient use of resources, including economical purchase and use of fuel and electric energy, under fuel adjustment clauses on file with the Commission; (2) evaluate fuel costs in individual rate filings; (3) supplement periodic utility audits. The information has also been used by the Energy Information Administration under a Congressional mandate to study various aspects of coal, oil, and gas transportation rates.

Action: The Commission is requesting a three-year extension of the current expiration date, with no changes to the existing collection of data.

Burden Statement: Public reporting burden for this collection is estimated as:

Number of respondents annually	Number of responses per respondent	Average burden hours per response	Total annual burden hours
(1)	(2)	(3)	(1) × (2) × (3)
114*	57	63.16#	3,600

*(114 responses every two years).
rounded off.

Estimated cost burden to respondents is $211,391. (3,600 hours/2080 hours per year times $122,137 per year average per employee = $ 211,391). The cost per respondent is $1,854).

The reporting burden includes the total time, effort, or financial resources expended to generate, maintain, retain, disclose, or provide the information including: (1) Reviewing instructions; (2) developing, acquiring, installing, and utilizing technology and systems for the purposes of collecting, validating, verifying, processing, maintaining, disclosing and providing information; (3) adjusting the existing ways to comply with any previously applicable instructions and requirements; (4) training personnel to respond to a collection of information; (5) searching data sources; (6) completing and reviewing the collection of information; and (7) transmitting, or otherwise disclosing the information.

The estimate of cost for respondents is based upon salaries for professional and clerical support, as well as direct and indirect overhead costs. Direct costs include all costs directly attributable to providing this information, such as administrative costs and the cost for information technology. Indirect or overhead costs are costs incurred by an organization in support of its mission. These costs apply to activities, which benefit the whole organization rather than any one particular function or activity.

Comments are invited on: (1) Whether the proposed collection of information is necessary for the proper performance of the functions of the Commission, including whether the information will have practical utility; (2) the accuracy of the agency's estimate of the burden of the proposed collection of information, including the validity of the methodology and assumptions used; (3) ways to enhance the quality, utility and clarity of the information to be collected; and (4) ways to minimize the burden of the collection of information on those who are to respond, including the use of appropriate automated, electronic, mechanical, or other technological collection techniques or other forms of information technology, *e.g.*, permitting electronic submission of responses.

Magalie R. Salas,

Secretary.

[FR Doc. E6–21245 Filed 12–13–06; 8:45 am]

BILLING CODE 6717–01–P

DEPARTMENT OF ENERGY

Federal Energy Regulatory Commission

[Docket No. EL07–19–000]

City of Azusa, CA; Notice of Filing

December 7, 2006.

Take notice that on December 1, 2006, the City of Azusa, California tendered for filing its fourth annual revision to its Transmission Revenue Balancing Account Adjustment.

Any person desiring to intervene or to protest this filing must file in accordance with Rules 211 and 214 of the Commission's Rules of Practice and Procedure (18 CFR 385.211, 385.214). Protests will be considered by the Commission in determining the appropriate action to be taken, but will not serve to make protestants parties to the proceeding. Any person wishing to become a party must file a notice of intervention or motion to intervene, as appropriate. Such notices, motions, or protests must be filed on or before the comment date. On or before the comment date, it is not necessary to serve motions to intervene or protests on persons other than the Applicant.

The Commission encourages electronic submission of protests and interventions in lieu of paper using the ''eFiling'' link at *http://www.ferc.gov*. Persons unable to file electronically should submit an original and 14 copies of the protest or intervention to the Federal Energy Regulatory Commission, 888 First Street, NE., Washington, DC 20426.

This filing is accessible on-line at *http://www.ferc.gov*, using the ''eLibrary'' link and is available for review in the Commission's Public Reference Room in Washington, DC. There is an ''eSubscription'' link on the Web site that enables subscribers to receive e-mail notification when a document is added to a subscribed docket(s). For assistance with any FERC Online service, please e-mail *FERCOnlineSupport@ferc.gov*, or call (866) 208–3676 (toll free). For TTY, call (202) 502–8659.

Comment Date: 5 p.m. Eastern Time on January 2, 2007.

Magalie R. Salas,

Secretary.

[FR Doc. E6–21246 Filed 12–13–06; 8:45 am]

BILLING CODE 6717–01–P

DEPARTMENT OF ENERGY

Federal Energy Regulatory Commission

[Docket No. CP89–738–003]

Interstate Power and Light Company; Notice of Application

December 6, 2006.

Take notice that on November 30, 2006, Interstate Power and Light Company (IPL), a wholly owned subsidiary of Alliant Energy Corporation, P.O. Box 351, 200 First Street, SE., Cedar Rapids, Iowa 52406–4533 filed with the Federal Energy Regulatory Commission an abbreviated application pursuant to section 7(f) of the Natural Gas Act (NGA), as amended, requesting an amended service area determination within which IPL may, without further Commission authorization, enlarge or expand its natural gas distribution facilities. IPL also requests: (i) A finding that IPL continues to qualifies as a local distribution company (LDC) for purposes of section 311 of the Natural Gas Policy Act of 1978 (NGPA); (ii) a waiver of the Commission's accounting and reporting requirements and other regulatory requirements ordinarily applicable to natural gas companies under the NGA and NGPA; and (iii) such further relief as the Commission may deem appropriate, all as more fully set forth in the application which is on file with the Commission and open to public inspection. The filing may also be viewed on the Commission's Web site at *www.ferc.gov* using the ''eLibrary'' link. Enter the docket number excluding the last three digits in the docket number field to access the document. For assistance, please contact FERC Online Support at *FERCOnlineSupport@ferc.gov* or toll free at (866) 208–3676, or for TTY, contact (202) 502–8659.

Any questions regarding the application should be directed to Jennifer Moore, Alliance Energy Corporate Services, Inc., P.O. Box 351, 200 First Street, SE., Cedar Rapids, Iowa 52406–0351, (telephone) (319) 786–4219, (fax) (319) 786–4533, *jennifermoore@alliantenergy.com* or Karol Lyn Newman or Matthew J. Agen, Morgan, Lewis and Bockius, LLP, 111 Pennsylvania Avenue, NW., Washington, DC 20004 (telephone) (202) 739–5257/5414, *klnewman@morganlewis.com* or *magen@morganlewis.com.*

There are two ways to become involved in the Commission's review of this project. First, any person wishing to obtain legal status by becoming a party to the proceedings for this project should, on or before the comment date, file with the Federal Energy Regulatory Commission, 888 First Street, NE., Washington, DC 20426, a motion to intervene in accordance with the requirements of the Commission's Rules of Practice and Procedure (18 CFR 385.214 or 385.211) and the Regulations under the NGA (18 CFR 157.10). A person obtaining party status will be placed on the service list maintained by the Secretary of the Commission and will receive copies of all documents filed by the applicant and by all other parties. A party must submit 14 copies of filings made with the Commission and must mail a copy to the applicant and to every other party in the proceeding. Only parties to the proceeding can ask for court review of Commission orders in the proceeding.

However, a person does not have to intervene in order to have comments considered. The second way to participate is by filing with the Secretary of the Commission, as soon as possible, an original and two copies of comments in support of or in opposition to this project. The Commission will consider these comments in determining the appropriate action to be taken, but the filing of a comment alone will not serve to make the filer a party to the proceeding. The Commission's rules require that persons filing comments in opposition to the project provide copies of their protests only to the party or parties directly involved in the protest.

The Commission strongly encourages electronic filings of comments, protests, and interventions via the internet in lieu of paper. See 18 CFR 385.2001(a)(1)(iii) and the instructions on the Commission's Web site (*www.ferc.gov*) under the ''e-Filing'' link.

Comment Date: 5 p.m. Eastern Time on December 16, 2006.

Magalie R. Salas,

Secretary.

[FR Doc. E6–21250 Filed 12–13–06; 8:45 am]

BILLING CODE 6717–01–P

DEPARTMENT OF ENERGY

Federal Energy Regulatory Commission

[Docket No. EL07–20–000]

Leadore Wind Farm; Notice of Filing

December 7, 2006.

Take notice that on November 30, 2006, Leadore Wind Farm tendered for filing a request for an intervention and to extend the deadline date until

November 10, 2007 for the interconnection to PacifiCorp transmission line.

Any person desiring to intervene or to protest this filing must file in accordance with Rules 211 and 214 of the Commission's Rules of Practice and Procedure (18 CFR 385.211, 385.214). Protests will be considered by the Commission in determining the appropriate action to be taken, but will not serve to make protestants parties to the proceeding. Any person wishing to become a party must file a notice of intervention or motion to intervene, as appropriate. Such notices, motions, or protests must be filed on or before the comment date. On or before the comment date, it is not necessary to serve motions to intervene or protests on persons other than the Applicant.

The Commission encourages electronic submission of protests and interventions in lieu of paper using the ''eFiling'' link at *http://www.ferc.gov.* Persons unable to file electronically should submit an original and 14 copies of the protest or intervention to the Federal Energy Regulatory Commission, 888 First Street, NE., Washington, DC 20426.

This filing is accessible on-line at *http://www.ferc.gov*, using the ''eLibrary'' link and is available for review in the Commission's Public Reference Room in Washington, DC. There is an ''eSubscription'' link on the Web site that enables subscribers to receive e-mail notification when a document is added to a subscribed docket(s). For assistance with any FERC Online service, please e-mail *FERCOnlineSupport@ferc.gov*, or call (866) 208–3676 (toll free). For TTY, call (202) 502–8659.

Comment Date: 5 p.m. Eastern Time on December 21, 2006.

Magalie R. Salas,

Secretary.

[FR Doc. E6–21247 Filed 12–13–06; 8:45 am]

BILLING CODE 6717–01–P

DEPARTMENT OF ENERGY

Federal Energy Regulatory Commission

[Docket No. ER06–615–002]

California Independent System Operator Corporation; Supplemental Notice of Technical Conference

December 7, 2006.

As announced in the Notice of Technical Conference issued on October 24, 2006, the Federal Energy Regulatory Commission (Commission) will host a technical conference on Thursday and Friday, December 14–15, 2006 to address issues related to the California Independent System Operator Corporation's (CAISO) electric tariff, which reflects the Market Redesign and Technology Upgrade (MRTU). The purpose of the technical conference is to assist the CAISO and parties outside the CAISO Control Area to identify alleged seams issues that require resolution, in accordance with the directive of the Commission's September 21, 2006 order conditionally accepting the CAISO's proposed MRTU electric tariff.

The conference will be held at the Biltmore Hotel at 2400 East Missouri in Phoenix, Arizona. The conference is scheduled for Thursday, December 14 from 1 to 5 p.m. and Friday, December 15, from 8:30 a.m. to 12:30 p.m. (MST). Commissioners will attend, and the conference is open to the public.

The agenda for this conference, with a list of participating panelists, is attached.

All interested persons may attend the conference, and registration is not a strict requirement. However, in-person attendees are encouraged to register on-line at *http://www.ferc.gov/whats-new/registration/caiso-12–14-form.asp.*

For more information about the conference, please contact Sarah McKinley at 202–502–8004, *sarah.mckinley@ferc.gov.*

Magalie R. Salas,

Secretary.

Agenda and Panelists for MRTU Seams Technical Conference, Phoenix, AZ—December 14–15, 2006

Thursday, December 14, 1–5 p.m. (MST)

1–1:15 p.m.
- Greeting and opening remarks by Chairman Joseph Kelliher

1:15–3 p.m.
- Panel 1: Operational Seams Between CAISO and Other Systems (including systems within CAISO's footprint)

Presentations by Panel 1 Panelists:
- Brian Silverstein, Vice President of Planning & Asset Management and Chief Engineer, Bonneville Power Administration.
- Jerry Smith, Manager of Alliance Partnership, Arizona Public Service Co., and Chair of Western Electricity Coordinating Council Seams Issues Subcommittee.
- Chuck Durick, Transmission Reform Regional Manager, Idaho Power.
- Gary Harper, Manager of System Operations, Salt River Project.
- Robert Kahn, Executive Director, Northwest Independent Power Producers Coalition.
- Mark J. Smith, Director of Market Affairs, FPL Energy.
- Charles A. King, Vice President of Market Development and Program Management, and Mark Rothleder, Principal Market Developer, CAISO.

3–3:15 p.m.
- Break

3:15–5 p.m.
- Q&A and Discussion

Friday, December 15, 8:30 a.m.–12:30 p.m. (MST)

8:30–10 a.m.
- Panel 2: Commercial, Contractual and Financial Issues

Presentations by Panel 2 Panelists:
- Jeff Sterba, Chairman, President and CEO, Public Service Company of New Mexico.
- Sean Gallagher, Director, Energy Division, California Public Utilities Commission.
- Pedro J. Pizarro, Senior Vice President, Power Procurement, Southern California Edison Company.
- Marilyn Showalter, Executive Director, Public Power Council.
- Jim Shetler, Assistant General Manager, Energy Supply, Sacramento Municipal Utility District.
- Gary Ackerman, Executive Director, Western Power Trading Forum.
- Yakout Mansour, President and CEO, CAISO.

10–10:15 a.m.
- Break 10:15–11:45 a.m.
- Q&A and Discussion

11:45 a.m.–12:15 p.m.
- Conference take-aways and process for next steps

12:15–12:30 p.m.
- Concluding remarks by Chairman Joseph Kelliher and Commissioners

[FR Doc. E6–21249 Filed 12–13–06; 8:45 am]

BILLING CODE 6717–01–P

DEPARTMENT OF ENERGY

Federal Energy Regulatory Commission

Notice Allowing Post-Technical Conference Comments

December 7, 2006.

Midwest Independent Transmission System Operator, Inc.	Docket No. ER05–6–044 Docket No. ER05–6–054 Docket No. ER05–6–055
Midwest Independent Transmission System Operator, Inc. and PJM Interconnection, L.L.C.	Docket No. EL04–135–046 Docket No. EL04–135–056 Docket No. EL04–135–057

Midwest Independent Transmission System Operator, Inc. and PJM Interconnection, L.L.C.	Docket No. EL02–111–064 Docket No. EL02–111–074 Docket No. EL02–111–075
Ameren Services Company	Docket No. EL03–212–060 Docket No. EL03–212–070 Docket No. EL03–212–071
Midwest Independent Transmission System Operator, Inc.	Docket No. ER06–18–000 Docket No. ER06–18–001 Docket No. ER06–18–002 Docket No. ER06–18–003 Docket No. ER06–18–004 Docket No. ER06–18–005
PJM Interconnection, L.L.C.	Docket No. ER06–954–000 Docket No. ER06–456–000 Docket No. ER06–1271–000

Pursuant to the Commission's September 21, 2006 order in certain of these proceedings, *Midwest Independent Transmission System Operator, Inc.*, 116 FERC ¶ 61,260 (2006), a staff technical conference was convened on Tuesday, December 5, 2006, from 9:00 a.m. to 12:30 p.m. at the offices of the Federal Energy Regulatory Commission. The technical conference addressed issues related to the competing compliance filings submitted by the Midwest Independent Transmission System Operator, Inc. and PJM Interconnection, L.L.C. The filings propose conflicting methods for allocating to each regional transmission organization (RTO) the cost responsibility for constructing facilities within one RTO's footprint that also benefit transmission owners in the other RTO—the so-called cross-border facilities.

Take notice that the Commission will accept comments pursuant to the discussion at the technical conference. Initial comments are due no later than 5 p.m. Eastern Time on Monday, January 22, 2007. Reply comments are due no later than 5 p.m. Eastern Time on Tuesday, February 6, 2007.

For further information please contact Fernando Rodriguez at (202) 502–8231 or e-mail *fernando.rodriguez@ferc.gov.*

Magalie R. Salas,

Secretary.

[FR Doc. E6–21248 Filed 12–13–06; 8:45 am]

BILLING CODE 6717–01–P

ENVIRONMENTAL PROTECTION AGENCY

[EPA–HQ–OPP–2006–0311; FRL–8255–4]

Agency Information Collection Activities; Submission to OMB for Review and Approval; Comment Request; Notice of Supplemental Distribution of a Registered Pesticide Product; EPA ICR No. 0278.09, OMB Control No. 2070–0044

AGENCY: Environmental Protection Agency (EPA).

ACTION: Notice.

SUMMARY: In compliance with the Paperwork Reduction Act (44 U.S.C. 3501 *et seq.*), this document announces that an Information Collection Request (ICR) has been forwarded to the Office of Management and Budget (OMB) for review and approval. The ICR, which is abstracted below, describes the nature of the information collection activity and its expected burden and costs.

DATES: Additional comments may be submitted on or before January 16, 2007.

ADDRESSES: Submit your comments, referencing Docket ID No. EPA–HQ–OPP–2006–0311, to (1) EPA online using *http://www.regulations.gov* (our preferred method), or by mail to: Office of Pesticide Programs (OPP) Regulatory Public Docket (7502P), Environmental Protection Agency, 1200 Pennsylvania Ave., NW., Washington, DC 20460–0001, and (2) OMB by mail to: Office of Information and Regulatory Affairs, Office of Management and Budget (OMB), Attention: Desk Officer for EPA, 725 17th Street, NW., Washington, DC 20503.

FOR FURTHER INFORMATION CONTACT: Nathanael R. Martin, Field and External Affairs Division, Office of Pesticide Programs, 7506P, Environmental Protection Agency, 1200 Pennsylvania Ave., NW., Washington, DC 20460–0001; telephone number: 703–305–6475; fax number: 703–305–5884; e-mail address: *martin.nathanael@epa.gov.*

SUPPLEMENTARY INFORMATION: EPA has submitted the following ICR to OMB for review and approval according to the procedures prescribed in 5 CFR 1320.12. On May 10, 2006 (71 FR 27240), EPA sought comments on this ICR pursuant to 5 CFR 1320.8(d). EPA received no comments. Any additional comments on this ICR should be submitted to EPA and OMB within 30 days of this notice.

EPA has established a public docket for this ICR under Docket ID No. EPA–HQ–OPP–EPA–HQ–OPP–2006–0311, which is available for online viewing at *http://www.regulations.gov*, or in person viewing at the OPP Regulatory Public Docket in Rm. S–4400, One Potomac Yard (South Building), 2777 S. Crystal Drive, Arlington, VA. This docket facility is open from 8:30 a.m. to 4 p.m., Monday through Friday, excluding legal holidays. The docket telephone number is (703) 305–5805.

Use EPA's electronic docket and comment system at *http://www.regulations.gov*, to submit or view public comments, access the index listing of the contents of the docket, and to access those documents in the docket that are available electronically. Once in the system, select ''docket search,'' then key in the Docket ID number identified above. Please note that EPA's policy is that public comments, whether submitted electronically or in paper, will be made available for public viewing at *http://www.regulations.gov* as EPA receives them and without change, unless the comment contains copyrighted material, CBI, or other information whose public disclosure is restricted by statute. For further information about the electronic docket, go to *http://www.regulations.gov.*

Title: Notice of Supplemental Distribution of a Registered Pesticide Product.

ICR Numbers: EPA ICR No. 0278.09, OMB Control No. 2070–0044.

ICR Status: This is a request to renew an existing approved collection. This ICR is scheduled to expire on January 31, 2007. Under OMB regulations, the Agency may continue to conduct or sponsor the collection of information while this submission is pending at OMB. This ICR describes the nature of the information collection and its estimated burden and cost.

Abstract: This information collection activity provides the Environmental Protection Agency (EPA) with notification of supplemental registration of distributors of pesticide products. Section 3(e) of the Federal Insecticide, Fungicide and Rodenticide Act (FIFRA) (see 7 U.S.C. 136a(e)), allows pesticide registrants to distribute or sell a registered pesticide product under a different name instead of or in addition to his own. Such distribution and sale is termed ''supplemental distribution'' and the product is termed a ''distributor product.'' EPA is responsible for the regulation of pesticides as mandated by FIFRA, as amended. EPA requires the pesticide registrant to submit a supplemental statement (EPA Form 8570–5, Notice of Supplemental Distribution of a Registered Pesticide Product) when the registrant has entered into an agreement with a second company that will distribute the registrant's product under the second company's name and product name.

Responses to this collection of information are therefore mandatory (see 40 CFR 152.132).

Burden Statement: The annual public reporting and recordkeeping burden for this collection of information is estimated to average about 15 minutes per response. Burden means the total time, effort, or financial resources expended by persons to generate, maintain, retain, or disclose or provide information to or for a Federal agency. This includes the time needed to review instructions; develop, acquire, install, and utilize technology and systems for the purposes of collecting, validating, and verifying information, processing and maintaining information, and disclosing and providing information; adjust the existing ways to comply with any previously applicable instructions and requirements which have subsequently changed; train personnel to be able to respond to a collection of information; search data sources; complete and review the collection of information; and transmit or otherwise disclose the information.

Respondents/Affected Entities: Pesticide registrants.

Estimated Number of Respondents: 1720.

Frequency of Response: On occasion.

Estimated Total Annual Hour Burden: 595.

Estimated Total Annual Labor Cost: $46,555.62.

Changes in the Estimates: There is a decrease of 405 hours in the total estimated burden currently identified in the OMB Inventory of Approved ICR Burdens. This decrease is an adjustment that reflects EPA's expectation that only 2,479 notices will be submitted to the Agency annually over the next 3 years, versus the 4,000 notices EPA had previously expected to receive on an annual basis.

Dated: December 7, 2006.

Richard T. Westlund,

Acting Director, Collection Strategies Division.

[FR Doc. E6–21293 Filed 12–13–06; 8:45 am]

BILLING CODE 6560–50–P

ENVIRONMENTAL PROTECTION AGENCY

[EPA–HQ–RCRA–2006–0624; FRL–8255–3]

Agency Information Collection Activities; Submission to OMB for Review and Approval; Comment Request; Land Disposal Restrictions No-Migration Variances (Renewal), EPA ICR Number 1353.08, OMB Control Number 2050–0062

AGENCY: Environmental Protection Agency (EPA).

ACTION: Notice.

SUMMARY: In compliance with the Paperwork Reduction Act (44 U.S.C. 3501 *et seq.*), this document announces that an Information Collection Request (ICR) has been forwarded to the Office of Management and Budget (OMB) for review and approval. This is a request to renew an existing approved collection. This ICR is scheduled to expire on December 31, 2006. Under OMB regulations, the Agency may continue to conduct or sponsor the collection of information while this submission is pending at OMB. This ICR describes the nature of the information collection and its estimated burden and cost.

DATES: Additional comments may be submitted on or before January 16, 2007.

ADDRESSES: Submit your comments, referencing docket ID number EPA–HQ–RCRA–2006–0624, to (1) EPA online using *http://www.regulations.gov* (our preferred method), or by mail to: RCRA Docket, Mail Code 5305T, U.S. Environmental Protection Agency, 1200 Pennsylvania Avenue, NW., Washington, DC 20460; and (2) OMB by mail to: Office of Information and Regulatory Affairs, Office of Management and Budget (OMB), Attention: Desk Officer for EPA, 725 17th Street, NW., Washington, DC 20503.

FOR FURTHER INFORMATION CONTACT: Peggy Vyas, Office of Solid Waste (Mail Code 5302W), Environmental Protection Agency, 1200 Pennsylvania Ave., NW., Washington, DC 20460; telephone number: 703–308–5477; fax number: 703–308–8686; e-mail address: *vyas.peggy@epa.gov.*

SUPPLEMENTARY INFORMATION: EPA has submitted the following ICR to OMB for review and approval according to the procedures prescribed in 5 CFR 1320.12. On August 2, 2006 (71 FR 43735), EPA sought comments on this ICR pursuant to 5 CFR 1320.8(d). EPA received no comments Any additional comments on this ICR should be submitted to EPA and OMB within 30 days of this notice.

EPA has established a public docket for this ICR under Docket ID No. EPA–HQ–RCRA–2006–0624, which is available for online viewing at *http://www.regulations.gov*, or in person viewing at the RCRA Docket in the EPA Docket Center (EPA/DC), EPA West, Room 3334, 1301 Constitution Ave., NW., Washington, DC. The EPA/DC Public Reading Room is open from 8 a.m. to 4:30 p.m., Monday through Friday, excluding legal holidays. The telephone number for the Reading Room is 202–566–1744, and the telephone number for RCRA Docket is (202) 566–0270.

Use EPA's electronic docket and comment system at *http://www.regulations.gov*, to submit or view public comments, access the index listing of the contents of the docket, and to access those documents in the docket that are available electronically. Once in the system, select ''docket search,'' then key in the docket ID number identified above. Please note that EPA's policy is that public comments, whether submitted electronically or in paper, will be made available for public viewing at *http://www.regulations.gov* as EPA receives them and without change, unless the comment contains copyrighted material, CBI, or other information whose public disclosure is restricted by statute. For further information about the electronic docket, go to *http://www.regulations.gov.*

Title: Land Disposal Restrictions No-Migration Variances (Renewal).

ICR numbers: EPA ICR No. 1353.08, OMB Control No. 2050–0062.

ICR status: This ICR is currently scheduled to expire on December 31, 2006. Under OMB regulations, the Agency may continue to conduct or sponsor the collection of information while this submission is pending at OMB. An Agency may not conduct or sponsor, and a person is not required to respond to, a collection of information, unless it displays a currently valid OMB control number. The OMB control numbers for EPA's regulations in title 40 of the CFR, after appearing in the **Federal Register** when approved, are listed in 40 CFR part 9, are displayed either by publication in the **Federal Register** or by other appropriate means, such as on the related collection instrument or form, if applicable. The display of OMB control numbers in certain EPA regulations is consolidated in 40 CFR part 9.

Abstract: To receive a variance from the hazardous waste land disposal prohibitions, owner/operators of hazardous waste storage or disposal facilities may petition the Environmental Protection Agency to

allow land disposal of a specific restricted waste at a specific site. The EPA Regional Offices will review the petitions and determine if they successfully demonstrate ''no migration.'' The applicant must demonstrate that hazardous wastes can be managed safely in a particular land disposal unit, so that ''no migration'' of any hazardous constituents occurs from the unit for as long as the waste remains hazardous. If EPA grants the variance, the waste is no longer prohibited from land disposal in that particular unit. If the owner/operator fails to make this demonstration, or chooses not to petition for the variance, best demonstrated available technology (BDAT) requirements of 40 CFR 268.40 must be met before the hazardous wastes are placed in a land disposal unit.

Burden Statement: The annual public reporting and recordkeeping burden for this collection of information is estimated to average 3,168 hours per response. Burden means the total time, effort, or financial resources expended by persons to generate, maintain, retain, or disclose or provide information to or for a Federal agency. This includes the time needed to review instructions; develop, acquire, install, and utilize technology and systems for the purposes of collecting, validating, and verifying information, processing and maintaining information, and disclosing and providing information; adjust the existing ways to comply with any previously applicable instructions and requirements; train personnel to be able to respond to a collection of information; search data sources; complete and review the collection of information; and transmit or otherwise disclose the information.

Respondents/Affected Entities: Business.

Estimated Number of Respondents: 1.

Frequency of Response: One-time.

Estimated Total Annual Hour Burden: 3,168.

Estimated Total Annual Cost: $211,275, which includes $121 annualized capital or O&M costs and $211,154 annual labor costs.

Changes in the Estimates: There is no change in the total estimated burden currently identified in the OMB Inventory of Approved ICR Burdens.

Dated: December 7, 2006.

Richard T. Westlund,

Acting Director, Collection Strategies Division.

[FR Doc. E6–21294 Filed 12–13–06; 8:45 am]

BILLING CODE 6560–50–P

ENVIRONMENTAL PROTECTION AGENCY

[Petition IV–2005–1; FRL–8255–8]

Clean Air Act Operating Permit Program; Petition for Objection to State Operating Permit for Tennessee Valley Authority—Paradise Fossil Plant; Drakesboro (Muhlenberg County), KY

AGENCY: Environmental Protection Agency (EPA).

ACTION: Notice of final order on petition to object to a state operating permit.

SUMMARY: Pursuant to Clean Air Act Section 505(b)(2) and 40 CFR 70.8(d), the EPA Administrator signed an Order, dated October 20, 2006, denying a petition to object to a state operating permit proposed by the Kentucky Division for Air Quality (KDAQ) for Tennessee Valley Authority (TVA) Paradise Fossil Plant (TVA Paradise) located in Drakesboro, Muhlenberg County, Kentucky. This Order constitutes final action on the petition submitted by Preston Forsyth, the Center for Biological Diversity, Kentucky Heartwood, and Hillary Lambert (Petitioners). Pursuant to section 505(b)(2) of the Clean Air Act (the Act) any person may seek judicial review of the Order in the United States Court of Appeals for the appropriate circuit within 60 days of this notice under section 307 of the Act.

ADDRESSES: Copies of the final Order, the petition, and all pertinent information relating thereto are on file at the following location: EPA Region 4, Air, Pesticides and Toxics Management Division, 61 Forsyth Street, SW., Atlanta, Georgia 30303–8960. The final Order is also available electronically at the following address: *http://www.epa.gov/region07/programs/artd/air/title5/petitiondb/petitions/tvaparadise_decision2005.pdf*

FOR FURTHER INFORMATION CONTACT: Art Hofmeister, Air Permits Section, EPA Region 4, at (404) 562–9115 or *hofmeister.art@epa.gov.*

SUPPLEMENTARY INFORMATION: The Act affords EPA a 45-day period to review and, as appropriate, to object to operating permits proposed by state permitting authorities under title V of the Act, 42 U.S.C. 7661–7661f. Section 505(b)(2) of the Act and 40 CFR 70.8(d) authorize any person to petition the EPA Administrator to object to a title V operating permit within 60 days after the expiration of EPA's 45-day review period if EPA has not objected on its own initiative. Petitions must be based only on objections to the permit that were raised with reasonable specificity during the public comment period provided by the state, unless the petitioner demonstrates that it was impracticable to raise these issues during the comment period or the grounds for the issues arose after this period.

Petitioners submitted a petition on April 21, 2005, requesting that EPA object to a state title V operating permit proposed by KDAQ for TVA Paradise. This action followed an objection (to the proposed permit) issued by EPA on February 18, 2005. On August 18, 2006, at the source's request, KDAQ subsequently withdrew the proposed permit. On October 20, 2006, the Administrator issued an Order denying the petition on the basis of it being moot since a permit (about which EPA could further object) no longer existed. The Order further explains EPA's rationale for denying the petition.

Dated: December 5, 2006.

A. Stanley Meiburg,

Deputy Regional Administrator, Region 4.

[FR Doc. E6–21289 Filed 12–13–06; 8:45 am]

BILLING CODE 6560–50–P

ENVIRONMENTAL PROTECTION AGENCY

[Petition IV–2003–6; FRL–8255–7]

Clean Air Act Operating Permit Program; Petition for Objection to State Operating Permit for Georgia-Pacific Brunswick Operations; Brunswick (Glynn County), GA

AGENCY: Environmental Protection Agency (EPA).

ACTION: Notice of final order on petition to object to a state operating permit.

SUMMARY: Pursuant to Clean Air Act Section 505(b)(2) and 40 CFR 70.8(d), the EPA Administrator signed an Order, dated September 21, 2006, denying a petition to object to a state operating permit issued by the Georgia Environmental Protection Division (EPD) to Georgia-Pacific Brunswick Operations (Georgia-Pacific) located in Brunswick, Glynn County, Georgia. This Order constitutes final action on the petition submitted by Ms. Deborah Ann Strong (Petitioner). Pursuant to section 505(b)(2) of the Clean Air Act (the Act) any person may seek judicial review of the Order in the United States Court of Appeals for the appropriate circuit within 60 days of this notice under section 307 of the Act.

ADDRESSES: Copies of the final Order, the petition, and all pertinent information relating thereto are on file

at the following location: EPA Region 4, Air, Pesticides and Toxics Management Division, 61 Forsyth Street, SW., Atlanta, Georgia 30303–8960. The final Order is also available electronically at the following address: *http://www.epa.gov/region07/programs/artd/air/title5/petitiondb/petitions/georgiapacific_decision2003.pdf.*

FOR FURTHER INFORMATION CONTACT: Art Hofmeister, Air Permits Section, EPA Region 4, at (404) 562–9115 or *hofmeister.art@epa.gov.*

SUPPLEMENTARY INFORMATION: The Act affords EPA a 45-day period to review and, as appropriate, to object to operating permits proposed by state permitting authorities under title V of the Act, 42 U.S.C. 7661–7661f. Section 505(b)(2) of the Act and 40 CFR 70.8(d) authorize any person to petition the EPA Administrator to object to a title V operating permit within 60 days after the expiration of EPA's 45-day review period if EPA has not objected on its own initiative. Petitions must be based only on objections to the permit that were raised with reasonable specificity during the public comment period provided by the state, unless the petitioner demonstrates that it was impracticable to raise these issues during the comment period or the grounds for the issues arose after this period.

Ms. Strong submitted a petition on May 15, 2003, requesting that EPA object to a state title V operating permit issued by EPD to Georgia-Pacific. The Petitioner maintains that the Georgia-Pacific permit is inconsistent with the Act because: (1) It fails to ensure the source's compliance with Georgia's nuisance rule; (2) it allows the source to emit illegal levels of formaldehyde emissions; and (3) the public notice and comment procedures associated with its issuance were flawed.

On September 21, 2006, the Administrator issued an Order denying this petition. The Order explains the reasons behind EPA's conclusion that the Petitioner has failed to demonstrate that the Georgia-Pacific permit is not in compliance with the requirements of the Act on the grounds raised.

Dated: December 5, 2006.

A. Stanley Meiburg,

Deputy Regional Administrator, Region 4.

[FR Doc. E6–21290 Filed 12–13–06; 8:45 am]

BILLING CODE 6560–50–P

ENVIRONMENTAL PROTECTION AGENCY

[Petition IV–2003–8; FRL–8255–6]

Clean Air Act Operating Permit Program; Petition for Objection to State Operating Permit for Continental Carbon Company; Phenix City (Russell County), AL

AGENCY: Environmental Protection Agency (EPA).

ACTION: Notice of final order on petition to object to a state operating permit.

SUMMARY: Pursuant to Clean Air Act Section 505(b)(2) and 40 CFR 70.8(d), the EPA Administrator signed an Order, dated September 21, 2006, denying a petition to object to a state operating permit issued by the Alabama Department of Environmental Management (ADEM) to Continental Carbon Company located in Phenix City, Russell County, Alabama. This Order constitutes final action on the petition submitted by Action Marine, Inc.; John Tharpe; the City of Columbus, Georgia; Owen and Mabel Ditchfield; Donald and Carolyn Lang; Alma Chapman; and Lois Baggett (Petitioners). Pursuant to section 505(b)(2) of the Clean Air Act (the Act) any person may seek judicial review of the Order in the United States Court of Appeals for the appropriate circuit within 60 days of this notice under section 307 of the Act.

ADDRESSES: Copies of the final Order, the petition, and all pertinent information relating thereto are on file at the following location: EPA Region 4, Air, Pesticides and Toxics Management Division, 61 Forsyth Street, SW., Atlanta, Georgia 30303–8960. The final Order is also available electronically at the following address: *http://www.epa.gov/region07/programs/artd/air/title5/petitiondb/petitions/continentalcarbon_decision2003.pdf.*

FOR FURTHER INFORMATION CONTACT: Kathleen Forney, Air Permits Section, EPA Region 4, at (404) 562–9130 or *forney.kathleen@epa.gov.*

SUPPLEMENTARY INFORMATION: The Act affords EPA a 45-day period to review and, as appropriate, to object to operating permits proposed by state permitting authorities under title V of the Act, 42 U.S.C. 7661–7661f. Section 505(b)(2) of the Act and 40 CFR 70.8(d) authorize any person to petition the EPA Administrator to object to a title V operating permit within 60 days after the expiration of EPA's 45-day review period if EPA has not objected on its own initiative. Petitions must be based only on objections to the permit that were raised with reasonable specificity during the public comment period provided by the state, unless the petitioner demonstrates that it was impracticable to raise these issues during the comment period or the grounds for the issues arose after this period.

Petitioners submitted a petition on December 24, 2003, requesting that EPA object to a state title V operating permit issued by ADEM to Continental Carbon. Petitioners maintain that the Continental Carbon permit is inconsistent with the Act because: (1) The public participation procedures associated with its issuance failed to utilize certain local newspapers; and (2) materials related to changes made to the draft permit following public comment were not made readily available to the public.

On September 21, 2006, the Administrator issued an Order denying this petition. The Order explains the reasons behind EPA's conclusion that the Petitioners failed to demonstrate that the Continental Carbon permit is not in compliance with the requirements of the Act on the grounds raised.

Dated: December 5, 2006.

A. Stanley Meiburg,

Deputy Regional Administrator, Region 4.

[FR Doc. E6–21291 Filed 12–13–06; 8:45 am]

BILLING CODE 6560–50–P

ENVIRONMENTAL PROTECTION AGENCY

[Petition IV–2001–6; FRL–8255–5]

Clean Air Act Operating Permit Program; Petition for Objection to State Operating Permit for King Finishing; Dover (Screven County), GA

AGENCY: Environmental Protection Agency (EPA).

ACTION: Notice of final order denying petition to object to a state operating permit in response to remand.

SUMMARY: On September 21, 2006, the Administrator issued an Order Granting Remanded Issue on Petition to Object (Order) regarding a state operating permit issued to King Finishing located in Dover, Screven County, Georgia, pursuant to title V of the Clean Air Act (the Act), 42 U.S.C. 7661–7661f. On October 9, 2001, the Georgia Center for Law in the Public Interest filed a petition, on behalf of the Sierra Club (Petitioner), seeking EPA's objection to the title V operating permit issued to King Finishing by the Georgia Environmental Protection Division (EPD). The Administrator denied the

petition in an Order dated October 9, 2002. Pursuant to Section 502(b) of the Act, Petitioner appealed to the U.S. Court of Appeals for the Eleventh Circuit (the Court). On January 20, 2006, the Court partially granted Petitioner's request for review, vacated the October 9, 2002, Order with respect to the mailing list issue, and remanded the issue to EPA for further consideration. Upon further consideration, EPA granted Petitioner's request to object to the King Finishing permit for EPD's failure to use a mailing list.

ADDRESSES: Copies of the Order, the petition, and all pertinent information relating thereto are on file at the following location: EPA Region 4, Air, Pesticides and Toxics Management Division, 61 Forsyth Street SW., Atlanta, Georgia 30303–8960. The final Order is also available electronically at the following address: *http://www.epa.gov/region7/programs/artd/air/title5/petitiondb/petitions/kingfinishing_decision2001_remanded.pdf*

FOR FURTHER INFORMATION CONTACT: Art Hofmeister, Air Permits Section, EPA Region 4, at (404) 562–9115 or *hofmeister.art@epa.gov.*

SUPPLEMENTARY INFORMATION: Other inconsistencies (with the Act) alleged by the Petitioner were: that the public participation process and the public notice of the draft permit were inadequate; that the permit improperly limits enforcement authority and the use of credible evidence; and that the permit contains both inadequate monitoring and reporting requirements. EPA's October 9, 2002, denial of the above issues was unaffected by the Court's decision.

Dated: December 5, 2006.

A. Stanley Meiburg,

Deputy Regional Administrator, Region 4.

[FR Doc. E6–21292 Filed 12–13–06; 8:45 am]

BILLING CODE 6560–50–P

ENVIRONMENTAL PROTECTION AGENCY

[FRL–8255–2]

Clean Air Act Advisory Committee (CAAAC) Notice of Meeting

AGENCY: Environmental Protection Agency (EPA).

ACTION: Notice of meeting.

SUMMARY: Pursuant to the Federal Advisory Committee Act (Pub. L. 92–463), notice is hereby given that the Clean Air Act Advisory Committee will hold its next open meeting on Thursday, January 11, 2007. The meeting is open to the public to attend and will begin at approximately 8:30 a.m. to 4 p.m. at the DoubleTree Hotel at 300 Army Navy Drive, Arlington, VA 22202. The Subcommittee meetings will be held on January 10, 2007 starting approximately at 9 a.m to 4:30 p.m. at the same location as the full committee. Seating will be available on a first come, first served basis. The Mobile Source Technical Review subcommittee will not meet at this time. The agenda for the full committee meeting will be posted on the CAAAC Web site: *http://www.epa.gov/oar/caaac/.*

DATES: Clean Air Act Advisory Committee will hold its next open meeting on Thursday, January 11, 2007, from approximately 8:30 a.m. to 4 p.m. Subcommittees will meet on Wednesday, January 10, 2007.

ADDRESSES: CAAAC and its subcommittee meetings will be held at the DoubleTree Hotel at 300 Army Navy Drive, Arlington, VA 22202.

FOR FURTHER INFORMATION CONTACT: Concerning the CAAAC, please contact Pat Childers, Office of Air and Radiation, U.S. EPA (202) 564–1082, FAX (202) 564–1352 or by mail at U.S. EPA, Office of Air and Radiation (Mail code 6102 A), 1200 Pennsylvania Avenue, NW., Washington, DC 20004. For information on the Subcommittee meetings, please contact the following individuals: (1) Permits/NSR/Toxics Integration—Debbie Stackhouse, 919–541–5354; (2) Air Quality Management—Jeff Whitlow, 919–541–5523; and (3) Economic Incentives and Regulatory Innovations—Carey Fitzmaurice, 202–564–1667. Additional Information on these meetings, CAAAC and its Subcommittees can be found on the CAAAC Web site: *http://www.epa.gov/oar/caaac/.*

Meeting Access: For information on access or services for individuals with disabilities, please contact Mr. Pat Childers at (202) 564–1082 or *childers.pat@epa.gov.* To request accommodation of a disability, please contact Mr. Childers, preferably at least 10 days prior to the meeting, to give EPA as much time as possible to process your request.

SUPPLEMENTARY INFORMATION: *Inspection of Committee Documents:* The Committee agenda and any docuemnts prepared for the meeting will be publicly available at the meeting. Thereafter, these documents, together with CAAAC meeting minutes, will be available by contacting the Office of Air and Radiation Docket and requesting information under docket OAR–2004–0075. The Docket office can be reached by telephoning 202–260–7548; FAX 202–260–4400.

Dated: November 8, 2006.

Patrick Childers,

Designated Federal Official for Clean Air Act Advisory Committee.

[FR Doc. E6–21295 Filed 12–13–06; 8:45 am]

BILLING CODE 6560–50–P

ENVIRONMENTAL PROTECTION AGENCY

[EPA–HQ–OPP–2006–0606; FRL–8105–8]

Acid Copper Chromate (ACC); Product Cancellation Order to Delete ACC Uses in Certain Pesticide Registrations

AGENCY: Environmental Protection Agency (EPA).

ACTION: Notice.

SUMMARY: This notice announces EPA's order terminating all residential uses of the acid copper chromate (ACC) registration held by OSMOSE, Inc. The affected registration is EPA Reg. No. 3008-60. OSMOSE voluntarily requested the use termination, pursuant to section 6(f)(1) of the Federal Insecticide, Fungicide, and Rodenticide Act (FIFRA), as amended. OSMOSE requested that it not be provided with any existing stocks provisions for the product. The Agency announced receipt of this request in a July 18, 2006 **Federal Register** Notice of Receipt of Request (71 FR 40717) (FRL-8080-5). In the July 18, 2006 Notice, EPA stated that it would accept the request and issue an order implementing the use termination, unless the Agency received substantive comments within the 30–day comment period that would merit its further review of the request, or unless the registrant withdrew the request within this period, which closed August 17, 2006. The Agency received one comment on the notice which was carefully considered by the Agency; it was determined that the request did not merit further review. Further, the registrant did not withdraw its request. Accordingly, on October 17, 2006 EPA approved the request. EPA hereby issues through this notice an order implementing the approved use terminations. Any distribution, sale, or use of the ACC product subject to this cancellation order is permitted only in accordance with the terms of this order.

DATES: The cancellations are effective December 14, 2006.

FOR FURTHER INFORMATION CONTACT: Adam Heyward, Antimicrobials Division (7510P), Office of Pesticide Programs, Environmental Protection Agency, 1200 Pennsylvania Ave., NW.,

Washington, DC 20460-0001; telephone number: (703) 308-6422; fax number: (703) 308-8481; e-mail address: *heyward.adam@epa.gov*.

SUPPLEMENTARY INFORMATION:

I. General Information

A. Does this Action Apply to Me?

This action is directed to the public in general, and may be of interest to a wide range of stakeholders including environmental, human health, and agricultural advocates; the chemical industry; pesticide users; and members of the public interested in the sale, distribution, or use of pesticides. Since others also may be interested, the Agency has not attempted to describe all the specific entities that may be affected by this action. If you have any questions regarding the applicability of this action to a particular entity, consult the person listed under **FOR FURTHER INFORMATION CONTACT.**

B. How Can I Get Copies of this Document and Other Related Information?

1. *Docket.* EPA has established a docket for this action under docket identification (ID) number EPA–HQ–OPP–2006–0606. Publicly available docket materials are available either in the electronic docket at *http://www.regulations.gov*, or, if only available in hard copy, at the Office of Pesticide Programs (OPP) Regulatory Public Docket in Rm. S-4400, One Potomac Yard (South Building), 2777 S. Crystal Drive Arlington, VA. The hours of operation of this Docket Facility are from 8:30 a.m. to 4 p.m., Monday through Friday, excluding legal holidays. The Docket telephone number is (703) 305-5805.

2. *Electronic access.* You may access this **Federal Register** document electronically through the EPA Internet under the ''**Federal Register**'' listings at *http://www.epa.gov/fedrgstr*.

II. What Action is the Agency Taking?

This notice announces the Agency's order implementing EPA's approval of OSMOSE's request to terminate all residential uses of its ACC product registration. The affected registration is identified in Table 1.

TABLE 1.-ACC-AFFECTED PRODUCT REGISTRATION

EPA registration no.	Product name
3008-60	AC 50% Wood Preservative

Table 2 of this unit includes the name and address of record for the registrant of the product in Table 1 of this unit.

TABLE 2.—REGISTRANT OF AFFECTED ACC PRODUCT REGISTRATION

EPA company no.	Company name and address
Osmose, Inc.	980 Ellicott Street Buffalo, NY 14209-2398

III. Summary of Public Comments Received and Agency Response to Comments

Only one public comment was received, which is posted on the docket. This comment addressed the commenter's concerns about the ACC registration in general. The Agency does not believe that the comment submitted during the comment period merits further review of OSMOSE's request nor a denial of the request for use termination.

IV. Cancellation Order

Pursuant to FIFRA section 6(f), EPA approved the use termination for the affected ACC registration identified in Table 1 of Unit II. on October 17, 2006. The Agency hereby orders that the ACC product registration identified in Table 1 of Unit II. is amended to terminate the affected uses. Any distribution, sale, or use of existing stocks of the products identified in Table 1 of Unit II. in a manner inconsistent with any of the Provisions for Disposition of Existing Stocks set forth below in Unit VI will be considered a violation of FIFRA.

V. What is the Agency's Authority for Taking this Action?

Section 6(f)(1) of FIFRA provides that a registrant of a pesticide product may at any time request that any of its pesticide registrations be canceled or amended to terminate one or more uses. FIFRA further provides that, before acting on the request, EPA must publish a notice of receipt of any such request in the **Federal Register**. Thereafter, following the public comment period, the Administrator may approve such a request.

VI. Provisions for Disposition of Existing Stocks

Existing stocks are those stocks of registered pesticide products which are currently in the United States and which were packaged, labeled, and released for shipment prior to the effective date of the cancellation action. The order issued in this notice implementing the use terminations includes no existing stocks provisions.

List of Subjects

Environmental protection, Pesticides and pests, Acid Copper Chromate, ACC.

Dated: December 7, 2006.

Dennis H. Edwards,

Acting Director, Antimicrobials Division, Office of Pesticide Programs.

[FR Doc. E6–21400 Filed 12–13–06; 8:45 am]

BILLING CODE 6560–50–S

ENVIRONMENTAL PROTECTION AGENCY

[EPA–HQ–OW–2006–0826; FRL–8256–1]

Notice of Availability of Draft Nutrient Criteria Technical Guidance Manual: Wetlands

AGENCY: Environmental Protection Agency (EPA).

ACTION: Notice of Availability.

SUMMARY: EPA announces the availability of a draft nutrient criteria technical guidance manual for wetlands. This document provides State and Tribal water quality managers and others with information on how to develop numeric nutrient criteria for wetlands as State or tribal law or regulation; however, the document does not contain site-specific numeric nutrient criteria. EPA is soliciting information, data, and views on issues of science pertaining to the information the Agency used to develop this document. While this document contains EPA's scientific recommendations regarding defensible approaches for developing regional nutrient criteria, this guidance does not substitute for Clean Water Act (CWA) or EPA regulations, nor is it a regulation. It does not impose legally binding requirements on the EPA, States, territories, authorized tribes, or the regulated community. State and tribal decision makers have discretion to adopt water quality standards that use approaches that differ from EPA's recommendations.

DATES: Scientific views, data, and information should be submitted by February 12, 2007.

ADDRESSES: You may submit scientific information, data, or views, identified by Docket ID No. EPA–HQ–OW–2006–0826, by one of the following methods:

- *http://www.regulations.gov:* Follow the on-line instructions for submitting information.
- *E-mail: ow-docket@epa.gov.*
- *Mail:* Water Docket, Environmental Protection Agency, Mail code: 4101T, 1200 Pennsylvania Ave., NW., Washington, DC 20460. Please include a total of four copies.

• *Hand Delivery:* EPA Docket Center (EPA/DC), EPA West, Room 3334, 1301 Constitution Ave., NW., Washington, DC 20460. Please include a total of four copies. Such deliveries are only accepted during the Docket's normal hours of operation, and special arrangements should be made for deliveries of boxed information.

Instructions: Direct your scientific information, data, or views, to Docket ID No. EPA–HQ–OW–2006–0826. EPA's policy is that all information received will be included in the public docket without change and may be made available online at *www.regulations.gov*, including any personal information provided, unless it includes information claimed to be Confidential Business Information (CBI) or other information whose disclosure is restricted by statute. Do not submit information that you consider to be CBI or otherwise protected through *www.regulations.gov* or *ow-docket@epa.gov.* The *www.regulations.gov* Web site is an ''anonymous access'' system, which means EPA will not know your identity or contact information unless you provide it in the body of your information. If you send an e-mail directly to EPA without going through *www.regulations* gov your e-mail address will be automatically captured and included as part of the information that is placed in the public docket and made available on the Internet. If you submit information electronically, EPA recommends that you include your name and other contact information in the body of your information and with any disk or CD–ROM you submit. If EPA cannot read your information due to technical difficulties and cannot contact you for clarification, EPA may not be able to consider your information. Electronic files should avoid the use of special characters, any form of encryption, and be free of any defects or viruses. For additional information about EPA's public docket visit the EPA Docket Center homepage at *http://www.epa.gov/epahome/dockets.htm.*

Docket: All documents in the docket are listed in the *www.regulations.gov* index. Although listed in the index, some information is not publicly available, *e.g.*, information claimed to be CBI or other information whose disclosure is restricted by statute. Certain other material, such as copyrighted material, will be publicly available only in hard copy. Publicly available docket materials are available either electronically in *www.regulations.gov* or in hard copy at the Water Docket, EPA/DC, EPA West, Room 3334, 1301 Constitution Ave., NW., Washington, DC. The Public Reading Room is open from 8:30 a.m. to 4:30 p.m., Monday through Friday, excluding legal holidays. The telephone number for the Public Reading Room is (202) 566–1744, and the telephone number for the Water Docket is (202) 566–2426.

FOR FURTHER INFORMATION CONTACT: Dr. Amy Parker, Health and Ecological Criteria Division (4304T), U.S. EPA, 1200 Pennsylvania Ave., NW., Washington, DC 20460; phone (202) 566–1341; fax (202) 566–1139; *e-mail parker.amy@epa.gov.*

SUPPLEMENTARY INFORMATION:

I. General Information

A. Does This Action Apply to Me?

Entities potentially interested in today's notice are those that discharge or release nitrogen and phosphorus to surface waters, and Federal, State, tribal, and local authorities that establish water quality standards for surface water. Categories and entities interested in today's notice include but are not limited to:

Category	Examples of potentially affected entities
State/Local/Tribal Government.	States, municipalities, tribes.
Industry	Fertilizer manufacturers.
Agriculture	Animal feeding operations, fertilized row crop operations.

This table is not intended to be exhaustive. Other types of entities not listed in the table may also be interested.

B. What Should I Consider as I Prepare My Scientific Information, Data or Views for EPA?

1. Submitting CBI. Do not submit CBI information to EPA through *www.regulations.gov* or e-mail. Clearly identify the specific information that you claim to be CBI. For CBI information in a disk or CD ROM that you mail to EPA, mark the outside of the disk or CD ROM as CBI and then identify electronically within the disk or CD ROM the specific information that is claimed as CBI). In addition to one complete version of the comment that includes information claimed as CBI, a copy of the comment that does not contain the information claimed as CBI must be submitted for inclusion in the public docket. Information so marked will not be disclosed except in accordance with procedures set forth in 40 CFR part 2.

2. Tips for Preparing Your Information, Data, or Views. When submitting scientific information, data or views, please remember to:

- Identify the docket number and other identifying information (subject heading, **Federal Register** date and page number).
- Explain why you agree or disagree; suggest alternatives and substitute language for your requested changes.
- Describe any assumptions and provide any technical information and/or data that you used.
- If you estimate potential costs or burdens, explain how you arrived at your estimate in sufficient detail to allow for it to be reproduced.
- Provide specific examples to illustrate your concerns, and suggest alternatives.
- Explain your views as clearly as possible.
- Make sure to submit your information comments by the deadline identified.

C. How Can I Get Copies of the Draft Document and Related Information?

Copies of the complete document entitled Nutrient Criteria Technical Guidance Manual: Wetlands (EPA–823–B–05–003) may be obtained from EPA's National Service Center for Environmental Publications (NSCEP) by phone at (513) 489–8190 or toll free (800) 490–9198, or by e-mail to *ncepiwo@one.net,* or by conventional mail to 11029 Kenwood Road, Cincinnati, OH 45242. You can also download the document from EPA's Web site at *http://www.epa.gov/waterscience/nutrient.html,* or from the docket.

II. Today's Notice

A. What Are Nutrients and Why Are We Concerned About Them?

Nutrients, or more specifically, nitrogen and phosphorus, are found in nature. They are also found in water as a result of anthropogenic sources including runoff from fertilized agriculture or residential grounds, municipal wastewater treatment plants, animal farming practices, and for nitrogen, from atmospheric deposition. Human activities can increase runoff from the land surface and increase the input of nutrients into surface waters, including wetlands.

The addition of plant nutrients stimulates the growth of algae and other plants which in turn stimulates fish and other organisms in the food web. When nutrients accumulate in excessive quantities, they can cause detrimental changes in water quality, in the aquatic

life that depends on those waters, and in human uses of that water. This phenomenon is called eutrophication. Eutrophication of United States surface waters is a long standing-problem. Eutrophication due to excessive nutrients is one of the top five causes of waterbody impairment in the U.S., according to information provided by states on their CWA section 303(d) lists. Chronic symptoms of over-enrichment include low dissolved oxygen, fish kills, cloudy murky water, and depletion of desirable flora and fauna.

Within wetlands chronic symptoms of over-enrichment include low dissolved oxygen, fish kills, increased sediment accumulation, and species and abundance shifts of flora and fauna. The problem is national in scope, but varies in nature from one region of the country to another due to geographical variations in geology and soil types.

B. What Has EPA Done To Develop Criteria for Nutrients?

In 1998, EPA published a report entitled ''National Strategy for the Development of Regional Nutrient Criteria.'' This report outlined a framework for development of waterbody-specific technical guidance that can be used to assess nutrient status and develop region-specific numeric nutrient criteria. We have already released the companion Nutrient Criteria Technical Guidance Manuals for Rivers and Streams (2000), Lakes and Reservoirs (2000), and Estuarine and Coastal Marine Waters (2001). The document presented here is the wetland-specific technical guidance for developing numeric nutrient criteria.

C. What Is Included in the Draft Guidance?

The guidance explains how to consider water, vegetation and soil conditions to develop regionally-based numeric nutrient criteria for wetland systems. While the manual does not provide specific recommendations for nutrient criteria, it does give EPA's recommendations on defensible technical approaches for developing regional nutrient criteria. This document provides elements considered important to criteria development including Classification, Sampling Design and Criteria Development (setting a benchmark).

1. Classification of Wetlands

Classification strategies for nutrient criteria development can include physiographic regions, hydrogeomorphic class, water depth and duration, and/or vegetation type or zone. Choosing a specific classification scheme will depend on practical considerations, such as: Whether a classification scheme is available in mapped digital form or can be readily derived from existing map layers; whether a hydrogeomorphic or other classification scheme has been refined for a particular region and wetland type; and whether classification schemes are already in use for monitoring and assessment of other water body types in a state or region.

2. Sampling Design

Three sampling designs for new wetland monitoring programs are described including: stratified random sampling, targeted/tiered approach, and BACI (Before/After, Control/Impact). These approaches are designed to allow one to obtain a significant amount of information for statistical analyses with relatively minimal effort. Sampling efforts should be designed to collect information that will answer management questions in a way that will allow robust statistical analysis. In addition, site selection, characterization of reference sites or systems, and identification of appropriate index periods are all of particular concern when selecting an appropriate sampling design. Careful selection of sampling design will allow the best use of financial resources and will result in the collection of high quality data for evaluation of the wetland resources of a State or Tribe.

3. Criteria Development

Several methods can be used to develop numeric nutrient criteria for wetlands; they include but are not limited to three criteria development methods that are detailed in this document: (1) Identification of reference systems for each established wetland type and class based on either best professional judgment (BPJ) or percentile selections of data plotted as frequency distributions; (2) refinement of classification systems, use of models, and/or examination of system biological attributes to assess the relationships among nutrients, vegetation or algae, soil, and other variables; and (3) use of published nutrient and vegetation, algal, and soil relationships and values that may be used (or modified for use) as criteria. A weight of evidence approach with multiple attributes that combine one or more of the development approaches will produce criteria of greater scientific validity.

Recognizing relationships between nutrient input and wetland response is the first step in mitigating the effects of cultural eutrophication. Once relationships are established, nutrient criteria can be developed to manage nutrient pollution and protect wetlands from eutrophication.

Dated: December 7, 2006.

Ephraim King,

Director, Office of Science and Technology.

[FR Doc. E6–21287 Filed 12–13–06; 8:45 am]

BILLING CODE 6560–50–P

EXPORT-IMPORT BANK

[Public Notice 95]

Agency Information Collection Activities; Submission for OMB Review; Comment Request

AGENCY: Export-Import Bank of the United States (Ex-Im Bank).

ACTION: Notice and request for comments.

SUMMARY: The Export-Import Bank, as a part of its continuing effort to reduce paperwork and respondent burden, invites the general public and other Federal agencies to comment on the proposed information collection as required by the Paperwork Reduction act of 1995. The purpose of the survey is to fulfill a statutory mandate (The Export-Import Bank Act of 1945, as amended, 12 U.S.C. 635) which directs Ex-Im Bank to report annually to the U.S. Congress any action taken toward providing export credit programs that are competitive with those offered by official foreign export credit agencies. The Act further stipulates that the annual report on competitiveness should include the results of a survey of U.S. exporters and U.S. commercial lending institutions which provide export credit to determine their experience in meeting financial competition from other countries whose exporters compete with U.S. exporters.

Accordingly, Ex-Im Bank is requesting that the proposed survey (EIB No. 00–02) be sent to approximately 60 applicants of Ex-Im Bank's medium- and long-term programs. The revised survey is similar to the previous survey, as it asks bankers and exporters to evaluate the competitiveness of Ex-Im Bank's programs vis-á-vis foreign export credit agencies. However, it has been modified in order to account for newer policies and to capture enough information to provide a better analysis of our competitiveness. In addition, the survey will be available on Ex-Im Bank's website, *www.exim.gov*, with recipients encouraged to respond on-line as well.

DATES: Written comments should be received on or before January 16, 2007 to be assured of consideration.

ADDRESSES: Direct all comments to David Rostker, Office of Management and Budget, Office of Information and Regulatory Affairs, NEOB, Room 10202, Washington, DC 20503 (202) 395–3897.

SUPPLEMENTARY INFORMATION: With respect to the proposed collection of information, Ex-Im Bank invites comments as to:

—Whether the proposed collection of information is necessary for the proper performance of the functions of Ex-Im Bank, including whether the information will have a practical use;

—The accuracy of Ex-Im Bank's estimate of the burden of the proposed collection of information, including the validity of the methodology and assumptions used;

—Ways to enhance the quality, usefulness, and clarity of the information to be collected; and

—Ways to minimize the burden of collection of information on those who are to respond, including through the use of appropriate automated electronic, mechanical, or other technological collection techniques or other forms of information technology; e.g., permitting electronic submission of responses

Title & Form Number: 2006 Exporter & Banker Survey of Ex-Im Bank Competitiveness, EIB Form 00–02.

OMB Number: 3048–0004.

Type of Review: Revision of a currently approved collection.

Annual Number of Respondents: 60.

Annual Burden Hours: 60.

Frequency of Reporting or Use: Annual Survey.

Dated: December 8, 2006.

Solomon Bush,

Agency Clearance Officer.

[FR Doc. 06–9680 Filed 12–13–06; 8:45 am]

BILLING CODE 6690–01–M

FEDERAL ELECTION COMMISSION

Sunshine Act Notices Meeting

DATE AND TIME: Thursday, December 14, 2006 at 10 a.m.

PLACE: 999 E Street, NW., Washington, DC (ninth floor).

STATUS: This meeting will be open to the public.

THE FOLLOWING ITEM HAS BEEN ADDED TO THE AGENDA: Purpose of Disbursement Policy Statement.

FOR FURTHER INFORMATION CONTACT: Mr. Robert Biersack, Press Officer, Telephone: (202) 694–1220.

Mary W. Dove,

Secretary of the Commission.

[FR Doc. 06–9721 Filed 12–12–06; 10:53 am]

BILLING CODE 6715–01–M

FEDERAL RESERVE SYSTEM

Sunshine Act Meeting

AGENCY HOLDING THE MEETING: Board of Governors of the Federal Reserve System.

TIME AND DATE: 10:00 a.m., Monday, December 18, 2006.

PLACE: Marriner S. Eccles Federal Reserve Board Building, 20th Street entrance between Constitution Avenue and C Streets, N.W., Washington, D.C. 20551.

STATUS: Open.

We ask that you notify us in advance if you plan to attend the open meeting and provide your name, date of birth, and social security number (SSN) or passport number. You may provide this information by calling (202) 452–2474 or you may **register online**. You may pre–register until close of business December 15, 2006. You also will be asked to provide identifying information, including a photo ID, before being admitted to the Board meeting. The Public Affairs Office must approve the use of cameras; please call (202) 452–2955 for further information. If you need an accommodation for a disability, please contact Penelope Beattie on (202) 452–3982. For the hearing impaired only, please use the Telecommunication Device for the Deaf (TDD) on (202) 263–4869.

Privacy Act Notice: Providing the information requested is voluntary; however, failure to provide your name, date of birth, and social security number or passport number may result in denial of entry to the Federal Reserve Board. This information is solicited pursuant to Sections 10 and 11 of the Federal Reserve Act and will be used to facilitate a search of law enforcement databases to confirm that no threat is posed to Board employees or property. It may be disclosed to other persons to evaluate a potential threat. The information also may be provided to law enforcement agencies, courts, and others, but only to the extent necessary to investigate or prosecute a violation of law.

MATTERS TO BE CONSIDERED:

Discussion Agenda:

1. Proposed joint rules implementing the ''Broker'' exceptions for banks under the Gramm–Leach–Bliley Act.

NOTE: This meeting will be recorded for the benefit of those unable to attend. Cassettes will be available for listening in the Board's Freedom of Information Office, and copies may be ordered for $6 per cassette by calling 202–452–3684 or by writing to: Freedom of Information Office, Board of Governors of the Federal Reserve System, Washington, D.C. 20551.

FOR FURTHER INFORMATION CONTACT: Michelle Smith, Director, or Dave Skidmore, Assistant to the Board, Office of Board Members at 202–452–2955.

SUPPLEMENTARY INFORMATION: You may call (202) 452–3206 for a **recorded announcement** of this meeting; or you may contact the Board's Web site at *http://www.federalreserve.gov* for an **electronic announcement**. (The Web site also includes procedural and other information about the open meeting.)

Board of Governors of the Federal Reserve System, December 11, 2006.

Robert deV. Frierson,

Deputy Secretary of the Board.

[FR Doc. 06–9715 Filed 12–11–06; 4:19 pm]

BILLING CODE 6210–01–S

DEPARTMENT OF HEALTH AND HUMAN SERVICES

Medicare Program; Medicare Appeals; Adjustment to the Amount in Controversy Threshold Amounts for Calendar Year 2007

ACTION: Notice.

SUMMARY: This notice announces the annual adjustment in the amount in controversy (AIC) threshold amounts for administrative law judge (ALJ) hearings and judicial review under the Medicare appeals process. The adjustments to the AIC threshold amounts will be effective for requests for ALJ hearings and judicial review filed on or after January 1, 2007. The 2007 AIC threshold amounts are $110 for ALJ hearings and $1,130 for judicial review.

DATES: *Effective Date:* January 1, 2007.

FOR FURTHER INFORMATION CONTACT: Michael L. Lipinski, Office of Medicare Hearings and Appeals, Office of the Secretary; (216) 615–4084.

SUPPLEMENTARY INFORMATION:

I. Background

Section 1869(b)(1)(E) of the Social Security Act, as amended by Section 521 of the Medicare, Medicaid and SCHIP Benefits Improvement and

Protection Act of 2000 (BIPA), established the AIC threshold amounts for ALJ hearing requests and judicial review at $100 and $1000, respectively, for Medicare Part A and Part B appeals. Section 940 of the Medicare Prescription Drug, Improvement, and Modernization Act of 2003 (Medicare Modernization Act ''MMA''), amended section 1869(b)(1)(E) to require the AIC threshold amounts for ALJ hearings and judicial review be adjusted annually. The AIC threshold amounts are to be adjusted, as of January 2005, by the percentage increase in the medical care component of the consumer price index for all urban consumers (U.S. city average) for July 2003 to the July of the preceding year involved and rounded to the nearest multiple of $10. Section 940(b)(2) of the MMA provided conforming amendments to apply the AIC adjustment requirement to Medicare Part C (Medicare Advantage ''MA'') appeals and certain health maintenance organization and competitive health plan appeals. Health care prepayment plans are also subject to MA appeals rules, including the AIC adjustment requirement. Section 101 of the MMA provides for the application of the AIC adjustment requirement to Medicare Part D appeals.

A. Medicare Part A and Part B Appeals

The statutory formula for the annual adjustment to the AIC threshold amounts for ALJ hearings and judicial review of Medicare Part A and Part B appeals, set forth at section 1869(b)(1)(E) of the Social Security Act [42 U.S.C. 1395ff(b)(1)(E)], is included in the applicable implementing regulations, 42 CFR part 405, subpart I, at § 405.1006(b). The regulations require the Secretary of the Department of Health and Human Services (the Secretary) to publish changes to the AIC threshold amounts in the **Federal Register**. 42 CFR 405.1006(b)(2). In order to be entitled to a hearing before an ALJ, a party to a proceeding must meet the AIC requirement. 42 CFR 405.1006(c). Similarly, a party must meet the AIC requirement at the time judicial review is requested for the court to have jurisdiction over the appeal. 42 CFR 405.1136(a).

B. Medicare Part C (Medicare Advantage) Appeals

Section 940(b)(2) of the MMA applies the AIC adjustment requirement to Part C (MA) appeals by amending section 1852(g)(5) of the Social Security Act [42 U.S.C. §§ 1395w–22(g)(5)]. The implementing regulations for Medicare Part C appeals are found at 42 CFR part 422, subpart M. Specifically, sections 422.600 and 422.612 discuss the AIC threshold amounts for ALJ hearings and judicial review. Section 422.600 grants any party, except the MA organization, a right to an ALJ hearing as long as the amount remaining in controversy after reconsideration meets the threshold requirement established annually by the Secretary. Section 422.612 states that any party, including the MA organization, may request judicial review if the amount in controversy meets the threshold requirement established annually by the Secretary.

C. Health Maintenance Organizations, Competitive Medical Plans, and Health Care Prepayment Plans

Section 940(b)(2) of the MMA also amended section 1876(c)(5)(B) of the Social Security Act [42 U.S.C. 1395ff(c)(5)(B)] to make section 1869(b)(1)(E) applicable to certain beneficiary appeals within the context of health maintenance organizations and competitive medical plans. The applicable implementing regulations for Medicare Part C appeals set forth in subpart M of 42 CFR part 422 and discussed above, apply to these appeals. The Medicare Part C appeals rules also apply to health care prepayment plan appeals.

D. Medicare Part D (Prescription Drug Plan) Appeals

The annually adjusted AIC threshold amounts for ALJ hearings and judicial review that apply to Medicare Parts A, B, and C appeals also apply to Medicare Part D appeals. Section 101 of the MMA added section 1860D–4(h)(1) regarding Part D appeals to the Social Security Act [42 U.S.C. 1395w–104(h)(1)]. This statutory provision requires a prescription drug plan sponsor to meet the requirements set forth in sections 1852(g)(4) and (g)(5) of the Social Security Act [42 U.S.C. 1395w–22(g)(4), (g)(5)] in a similar manner as MA organizations. As noted above, the annually adjusted AIC threshold requirement was added to section 1852(g)(5) by section 940(b)(2)(A) of the MMA. The implementing regulations for Medicare Part D appeals can be found at 42 CFR part 423, subpart M. The regulations impart at section 423.562(c) that unless the Part D appeals rules provide otherwise, the Part C appeals rules (including the annually adjusted AIC threshold amount) apply to Part D appeals to the extent they are appropriate. More specifically, §§ 423.610 and 423.630 of the Part D appeals rules discuss the AIC threshold amounts for ALJ hearings and judicial review. Section 423.610(a) grants a Part D enrollee, who is dissatisfied with the Independent Review Entity (IRE) reconsideration determination, a right to an ALJ hearing if the amount remaining in controversy after the IRE reconsideration meets the threshold amount established annually by the Secretary. Section 423.630(a) allows a Part D enrollee to request judicial review if the AIC meets the threshold amount established annually by the Secretary.

II. AIC Adjustment Formula and AIC Adjustments

As previously noted, section 940 of the MMA requires that the AIC threshold amounts be adjusted annually, beginning in January of 2005, by the percentage increase in the medical care component of the consumer price index (CPI) for all urban consumers (U.S. city average) for July 2003 to the July of the preceding year involved and rounded to the nearest multiple of $10.

A. Calendar Year 2005

The AIC threshold amount for ALJ hearing requests remained at $100 and the AIC threshold amount for judicial review rose to $1,050 for the 2005 calendar year. The 2005 AIC threshold amounts were published in the preamble to the Interim Final Rule, 70 FR 11420, 11423 (March 8, 2005), titled ''Medicare Program: Changes to the Medicare Claims Appeal Procedures.'' In addition, this information was previously made available to the public through a change to the Medicare Claims Processing Manual. CMS Change Request 3127, Revisions and Corrections to Chapter 29 of the IOM, Claims Processing Manual—Appeals § 30.8 (Nov. 26, 2004).

B. Calendar Year 2006

The AIC threshold amount for ALJ hearing requests rose to $110 and the AIC threshold amount for judicial review rose to $1,090 for the 2006 calendar year. The 2006 AIC threshold amounts were published by Notice in the **Federal Register**, 71 FR 2247 (Jan. 13, 2006).

C. Calendar Year 2007

The AIC threshold amount for ALJ hearing requests will remain at $110 and the AIC threshold amount for judicial review will rise to $1,130 for the 2007 calendar year. These new amounts are based on the 13.2 percent increase in the medical care component of the CPI from July of 2003 to July of 2006. The CPI level was at 297.6 in July of 2003 and rose to 337.0 in July of 2006. This change accounted for the 13.2 percent increase. The AIC

threshold amount for ALJ hearing requests changes to $113.20 based on the 13.2 percent increase. In accordance with section 940 of the MMA, this amount is rounded to the nearest multiple of $10. Therefore, the 2007 AIC threshold amount for ALJ hearings is $110. The AIC threshold amount for judicial review changes to $1,132 based on the 13.2 percent increase. This amount was rounded to the nearest multiple of $10, resulting in a 2007 AIC threshold amount of $1,130.

D. Summary Table of Adjustments in the AIC Threshold Amounts

TABLE 1.—AMOUNT-IN-CONTROVERSY THRESHOLD AMOUNTS

	CY 2004	CY 2005	CY 2006	CY 2007
ALJ Hearing	$100	$100	$110	$110
Judicial Review	1000	1050	1090	1130

CY—Calendar Year.

Dated: December 7, 2006.

Ann C. Agnew,

Executive Secretary to the Department.

[FR Doc. E6–21232 Filed 12–13–06; 8:45 am]

BILLING CODE 4150–26–P

DEPARTMENT OF HEALTH AND HUMAN SERVICES

Request for Information (RFI): Guidance for Prioritization of Pre-pandemic and Pandemic Influenza Vaccine

AGENCY: Office of the Secretary, Department of Health and Human Services.

ACTION: Notice.

SUMMARY: Influenza viruses have threatened the health of animal and human populations for centuries. A pandemic occurs when a novel strain of influenza virus emerges that has the ability to infect and be passed between humans. Because humans lack immunity to the new virus, a worldwide epidemic, or pandemic, can ensue. Three human influenza pandemics occurred in the 20th century. In the U.S., each pandemic led to illness in approximately 30 percent of the population and death in between 2 in 100 and 2 in 1,000 of those infected. It is projected that a modern pandemic, absent effective control measures, could result in the deaths of 200,000 to 2 million people in the United States alone. Extensive information on Federal government strategic and implementation plans for pandemic flu is available at *http://www.pandemicflu.gov.*

A critical part of the United States Government (USG) strategy to control the spread of a pandemic and reduce its health and societal impact is through the use of vaccines. The U. S. Government is working toward a goal of expanding domestic influenza vaccine surge capacity for the production of pandemic influenza vaccines for the entire population within six months of a pandemic declaration. However, at the beginning of a pandemic, the scarcity of pre-pandemic influenza vaccine and pandemic influenza vaccine (which could include up to two doses) will require that the limited supply be prioritized for distribution and administration. Pre-pandemic vaccine refers to influenza vaccine that is produced against a virus strain that is believed to have pandemic potential and is maintained in a national stockpile. Depending on what influenza strain actually causes the pandemic, stockpiled pre-pandemic vaccine may provide some protection. Total quantities of pre-pandemic vaccines will be limited.

Accordingly, the Federal government has initiated a process to provide guidance to assist State and local governments, communities, tribal and territorial governments, and the private sector in defining groups that should be considered for priority access to scarce vaccine. Guidance will be drafted by a Federal interagency task force that will seek information and advice from relevant individual stakeholders, a public engagement process in selected communities across the country, and through this Request for Information (RFI). The Federal government plans to issue draft guidance resulting from this process for public comment before finalization.

With this RFI, the Department of Health and Human Services (HHS) requests input from the public on considerations in developing guidance for prioritization of the distribution and administration of both pre-pandemic and pandemic influenza vaccines based on various pandemic severity and vaccine supply scenarios. Specifically, HHS is seeking input on pandemic influenza vaccine prioritization considerations from all interested and affected parties, including but not limited to public health and health care individuals and organizations, as well as those from other sectors of the economy including, for example, travel and transportation, commerce and trade, law enforcement, emergency management and responders, other critical infrastructure sectors and the general public. Previous reports relating to pandemic influenza vaccine prioritization issues are available at *http://www.pandemicflu.gov.*

DATES: Responses should be submitted to the Department of Health and Human Services on or before 5 p.m., EDT, January 18, 2007.

ADDRESSES:

Instructions for Submitting Comments: Electronic responses are preferred and may be addressed to *PandemicFlu.RFI@ hhs.gov.* Written responses should be addressed to Department of Health and Human Services, Room 434E, 200 Independence Avenue, SW., Washington, DC 20201, Attention: Pandemic Influenza Vaccine Prioritization RFI. A copy of this RFI is also available on the PandemicFlu.Gov Web site and at *http://www.aspe.hhs.gov/PIV/rfi.* Please follow instructions for submitting responses.

The submission of written materials in response to the RFI should not exceed 25 pages, not including appendices and supplemental documents. Responders may submit other forms of electronic materials to demonstrate or exhibit concepts of their written responses. Any information you submit will be made public. Consequently, do not send proprietary, commercial, financial, business confidential, trade secret, or personal information that you do not wish to be made public.

Public Access: Responses to this RFI will be available to the public in the HHS Public Reading Room, 200 Independence Avenue, SW., Washington, DC 20201. Please call (202) 690–7453 between 9 a.m. and 5 p.m. to arrange access. The RFI and all responses will also be made available on the HHS Web site at *PandemicFlu.Gov.*

FOR FURTHER INFORMATION CONTACT: Dr. Ben Schwartz, Office of Public Health and Science, (404) 639–8953.

SUPPLEMENTARY INFORMATION: Influenza viruses have threatened the health of animal and human populations for centuries. A pandemic occurs when a novel strain of influenza virus emerges that has the ability to infect and be passed between humans. Because humans lack immunity to the new virus, a worldwide epidemic, or pandemic, can ensue. Three human influenza pandemics occurred in the 20th century. In the U.S., each pandemic led to illness in approximately 30 percent of the population and death in between 2 in 100 and 2 in 1,000 of those infected. Extrapolating from experience in prior pandemics, it is projected that a modern pandemic, absent effective control measures, could result in the deaths of 200,000 to 2 million people in the United States alone.

The goals of the Federal response to an influenza pandemic include to: (1) Stop, slow, or otherwise limit the spread of the pandemic to the United States; (2) limit the domestic spread of the pandemic and mitigate the disease, suffering, and death; and (3) sustain infrastructure and mitigate impact to the economy and functioning of society.

A critical part of the U.S. Government strategy to control the spread of a pandemic and reduce its health and societal impact is through the use of vaccines. The U.S. Government is working toward a goal of expanding domestic influenza vaccine surge capacity to ensure the production of pandemic vaccines for the entire population within six months of a pandemic declaration. However, at the beginning of a pandemic, the scarcity of pre-pandemic and pandemic influenza vaccine will require that the limited supply be prioritized for distribution and administration.

The Homeland Security Council Implementation Plan for the National Strategy for Pandemic Influenza requires that HHS in coordination with the Department of Homeland Security (DHS) shall identify lists of personnel and high-risk groups who should be considered for priority access to medical countermeasures, including pre-pandemic and pandemic influenza vaccine. Priority recommendations will reflect the pandemic response goals of limiting mortality and severe morbidity; maintaining critical infrastructure and societal function; diminishing economic impacts; and maintaining national security. Limiting transmission may also be an objective.

To accomplish this task a Federal interagency working group has been established to: (1) Recommend priority groups for pandemic influenza vaccination as guidance for State, local, and tribal pandemic planning; and (2) recommend priority groups for vaccination with pre-pandemic vaccine as guidance for State, local, and tribal pandemic planning. The working group is co-chaired by HHS and DHS and includes members representing other Federal agencies. The working group is soliciting information from individual stakeholders in a series of meetings. In addition, a series of public engagement meetings will be held across the country to gather further information. This RFI provides an additional opportunity to inform the pandemic vaccine priority development process. In addition, the interagency working group's draft guidance and recommendations will be published in the **Federal Register** for a public comment period before being finalized.

Priorities for vaccine use will vary based on pandemic severity as well as the vaccine supply. In a situation where a very limited vaccine supply exists, it will be necessary to narrowly target and efficiently use the available vaccine. With greater availability, it may be feasible to expand priority groups and consider strategies to limit disease transmission. With respect to pre-pandemic vaccines, prioritization must consider the limited available supply and the likelihood that protection will only be partial, depending on how close the pre-pandemic vaccine matches the circulating pandemic virus. Because no single priority list is appropriate for all scenarios and because significant uncertainty is involved, Federal guidance will be developed for multiple contingencies.

Information Requested

For the purpose of developing pandemic influenza vaccine prioritization guidance, HHS requests input from the public on priorities for allocation of both pre-pandemic and pandemic influenza vaccines based on various pandemic severity and vaccine supply scenarios. HHS is interested in receiving comments on factors that should be considered in order to provide guidance on priority groups for pre-pandemic and pandemic vaccines to best achieve national pandemic response goals. As described earlier, the goals of the Federal response to an influenza pandemic include to: (1) Stop, slow, or otherwise limit the spread of the pandemic to the United States; (2) limit the domestic spread of the pandemic and mitigate the disease, suffering, and death; and (3) sustain infrastructure and mitigate impact to the economy and functioning of society. HHS is particularly interested in receiving responses to the following questions:

- What objectives, principles, strategies, criteria, assumptions and rationales should be considered in pandemic vaccine prioritization determinations?
- What is the relative importance of the three goals described above and what are the associated implications for vaccine prioritization?
- Which population group(s) should have priority for receiving pre-pandemic vaccine? Which should have priority for receiving pandemic vaccine? What is the rationale?
- How can fairness, equity, efficiency and related principles be reflected in the determination of priority groupings for receipt of pre-pandemic or pandemic vaccine?
- For priority groups, how should vaccine be allocated, distributed and administered? Who (Federal, State or local authorities) should determine when and how the vaccine is distributed and administered?

Potential Responders

HHS invites input from a broad range of individuals and organizations that have interests in pre-pandemic and pandemic vaccine prioritization. Some examples of these organizations include but are not limited to the following:

- State and local governments
- Advocacy groups and public interest organizations
- State and local public health departments
- Vaccine manufacturing industry, distributors and related organizations
- Health care professional societies and organizations
- Police, law enforcement, and public safety organizations
- Trade and labor organizations
- Emergency management and first responder organizations
- Chambers of Commerce and other business representatives
- Public utilities
- Other critical infrastructure sectors
- General Public

Dated: December 11, 2006.

John O. Agwunobi,

Assistant Secretary for Health, Office of Public Health and Science, Department of Health and Human Services.

[FR Doc. E6–21282 Filed 12–13–06; 8:45 am]

BILLING CODE 4151–05–P

DEPARTMENT OF HEALTH AND HUMAN SERVICES

Agency for Toxic Substances and Disease Registry

[ATSDR–227]

Public Health Assessments and Health Consultations Completed

July 2006–September 2006

AGENCY: Agency for Toxic Substances and Disease Registry (ATSDR), Department of Health and Human Services (HHS).

ACTION: Notice.

SUMMARY: This notice announces those sites for which ATSDR has completed public health assessments and health consultations during the period from July 2006 through September 2006. This list includes sites that are on or proposed for inclusion on the National Priorities List (NPL) and includes sites for which assessments or consultations were prepared in response to requests from the public.

FOR FURTHER INFORMATION CONTACT: William Cibulas, Jr., Ph.D., Director, Division of Health Assessment and Consultation, Agency for Toxic Substances and Disease Registry, 1600 Clifton Road, NE., Mailstop E–32, Atlanta, Georgia 30333, telephone (404) 498–0007.

SUPPLEMENTARY INFORMATION: The most recent list of completed public health assessments was published in the **Federal Register** on August 2, 2006 [71 FR 43774]. This announcement is the responsibility of ATSDR under the regulation ''Public Health Assessments and Health Effects Studies of Hazardous Substances Releases and Facilities'' [42 CFR part 90]. This rule sets forth ATSDR's procedures for the conduct of public health assessments under section 104(i) of the Comprehensive Environmental Response, Compensation, and Liability Act (CERCLA), as amended by the Superfund Amendments and Reauthorization Act (SARA) [42 U.S.C. 9604(i)].

Availability

The completed public health assessments and health consultations are available for public inspection at the ATSDR Records Center, 1825 Century Boulevard, Atlanta, Georgia (not a mailing address), between 8 a.m. and 4:30 p.m., Monday through Friday except legal holidays. Public health assessments and health consultations are often available for public review at local repositories such as libraries in corresponding areas. Many public health assessments and health consultations are available through ATSDR's Web site at *http://www.atsdr.cdc.gov/HAC/PHA/*. In addition, the completed public health assessments are available by mail through the U.S. Department of Commerce, National Technical Information Service (NTIS), 5285 Port Royal Road, Springfield, Virginia 22161, or by telephone at (800) 553–6847. NTIS charges for copies of public health assessments. The NTIS order numbers are listed in parentheses following the site names.

Public Health Assessments Completed or Issued

Between July 2006, and September 2006, public health assessments were issued for the sites listed below:

NPL and Proposed NPL Sites

Illinois

Ottawa Radiation Areas—(PB2006–114090)

Louisiana

Gulf States Utilities Company (a/k/a North Ryan Street Facility)—(PB2006–115440)

Missouri

Annapolis Lead Mine—(PB2006–115491)

New Jersey

Crown Vantage Landfill Site—(PB2006–113405)
Naval Weapons Station Earle (NWSE)—(PB2006–114586)
Rolling Knolls Landfill—(PB2006–113406)

New York

Hudson Technologies, Inc.—(PB2006–101877)

Tennessee

Evaluation of Potential Exposures to Contaminated Off-Site Groundwater from the Oak Ridge Reservation (USDOE)—(PB2006–114089)
White Oak Creek Radionuclide Releases, Oak Ridge Reservation (USDOE)—(PB2006–114587)

Wisconsin

Scrap Processing Company, Inc. (a/k/a Scrap Processing)—(PB2006–100121)

Non-NPL Petitioned Sites

California

Evaluation of Exposures to Contaminants from the Former ABEX/REMCO Hydraulics Facility—(PB2006–114088)

Florida

Town and Country Lake Estates—(PB2006–100957)

New Mexico

Los Alamos National Laboratory, U.S. Department of Energy—(PB2006–115492)

Utah

Bauer Dump and Tailings Blackhawk Resin Company—(PB2006–114069)

West Virginia

Reedsville Scattered Foundry Waste CERCLIS Site—(PB2006–115493)

Health Consultations Completed or Issued

Between July 2006, and September 2006, health consultations were issued for the sites listed below:

Alabama

Matthews International: York Casket Voluntary Cleanup Site

Arizona

Evaluation of Water Flows in the Nogales Wash
North Indian Bend Wash—Central Ground Treatment Facility

Arkansas

Private Groundwater Well Quality Near the Transitech, Incorporated Site

California

Evaluation of Health Studies Possibilities and Limitations at the ABEX/REMCO Hydraulics Facility
Hookston Station Site Review and Approval of the Risk Assessment

Colorado

Schlage Lock Company—Exposure and Health Effects Evaluation of PCE Contamination in Willow Springs Ponds

Connecticut

Old Southington Landfill Site—Technical Review of the Risk Assessment for Gas Vent Volatile Organic Compound Data
Public Health Evaluation of Fish Contamination Data in the Connecticut River and Park River Conduit

Florida

Altha School Air Monitoring
Long's Old Pond—Fish Testing
Saufley Field Landfill—Evaluation of Ambient Air Sampling

Idaho

Evaluation of Air Contaminants in the Treasure Valley Area

Evaluation of Selenium in Elk in the Southeast Idaho Phosphate Resource Area

Illinois

Belvidere Municipal Landfill #1
Bohn Heat Transfer Facility
Dixie Auto Salvage
Lincoln Limited Landfill
Smith-Douglass

Iowa

Iowa City Former Manufactured Gas Plant Site
Tails A Waggin' Pet Resort—Arsenic Soil Contamination

Kentucky

Martin County Coal Slurry Release
Rubbertown Industrial Area

Louisiana

Bayou Sorrel—Post-Hurricane Groundwater Sampling Evaluation
Combustion, Inc.—Post-Hurricane Groundwater Sampling Evaluation
Devil's Swamp Lake—A Review of Fish Data
Hurricane Response Sampling Assessment for D.L. Mud, Inc.
Hurricane Response Sampling Assessment for Gulf Coast Vacuum Services
Hurricane Response Sampling Assessment for PAB Oil & Chemical Service, Inc.
Hurricane Response Sampling Assessment for the Agriculture Street Landfill
Hurricane Response Sampling Assessment for the Southern Shipbuilding Corporation
Petro Processors of Louisiana, Inc.—Post-Hurricane Groundwater Sampling Evaluation

Maine

Contaminant Accumulation Potential in Plants and Animals Used by the Aroostook Band of Micmac Indians at the Former Loring Air Force Base
Holtrachem Manufacturing Company

Massachusetts

Environmental Data Review for Witchcraft Heights Elementary School and Nearby Properties
Former Zonolite Facility—Wemelco Way

Michigan

I–75/Caniff Area (Hamtramck) Lead Contamination (a/k/a ''Grand Haven'' Area (Hamtramck) Lead Contamination)
Little Black Creek Sediments
Little Black Creek Sediments—Floodplain Soil Sampling Results
Petersburg Mercury Site

Minnesota

Former Park Rapids Dump
Off-Site Soils: CMC Heartland Partners Lite Yard Site
St. Louis River Sediments: U.S. Steel Site—Dioxin and Polycyclic Aromatic Hydrocarbon Chemical Signatures (Fingerprints) in Sediments
St. Louis River Sediments: U.S. Steel Site—Technical Review of Discrepancies in 2002 Lacer Induced Fluorescence Data, and 2003 and 2004 Analytical Data

Missouri

Brewer Brothers Petroleum Bulk Plant
Former Cardwell Memorial Hospital
Former Zonolite Company/W.R. Grace Facility—St. Louis
Sherrill Mini Mart/Health Clinic

Nevada

Yerington Anaconda Mine Site (a/k/a Anaconda Mine)

New Hampshire

Bear Brook Villa
Cancer Incidence: Residents of Claremont, Sullivan County, New Hampshire (Wheelabrator-Claremont Site)

New Jersey

Adrow Chemical Company Site
Kiddie Kollege—Mercury Exposure Investigation
Matteo & Sons (a/k/a Matteo Iron and Metal Site)

New York

Mariners Marsh Park—Area of Concern

North Carolina

Payne Road Solvents
Sigmon's Septic Tank Service—Evaluation of Surface Water Data

Ohio

Fair Oak Park

Oregon

North Morrow and Northwest Umatilla Perchlorate Area
Salem-Keizer School District—3M Flooring

Pennsylvania

Former W.R. Grace/Zonolite Co. Facility—Investigation of Nearby Play Area
Waymart Spill Site

Tennessee

Clover Creek Workers (a/k/a Velsicol Chemical Corp.)
Cypress Creek Sub-Area III
Glover Site (a/k/a Tennessee Products)
Skyline Drive Dump

Texas

Cox Road Dump Site—Barium Health Concern
Tenaha Wood Treating
Tronox LLC, Texarkana Facility

Washington

BSB Diversified/Hexcel Corporation—Evaluation of Ground Water Contamination
DNR Triangle Gravel Pit
Gilbert Elementary School—Evaluation of Soil Contamination
Holmes Harbor
Lincoln Elementary School—Evaluation of Soil Contamination
Manson Elementary School—Evaluation of Soil Contamination
Naches Valley Intermediate School—Evaluation of Soil Contamination
Robertson Elementary School—Evaluation of Soil Contamination
Washington Elementary School—Evaluation of Soil Contamination

Wisconsin

Badger Army Ammunition Plant—Dinitrotoluene in Private Wells
Econocare Cleaners Vapor Intrusion Investigation
Redi-Quik Dry Cleaners—Vapor Intrusion in a Private Residence

Dated: December 8, 2006.

Kenneth Rose,

Acting Director, Office of Policy, Planning, and Evaluation, National Center for Environmental Health/Agency for Toxic Substances and Disease Registry.

[FR Doc. E6–21263 Filed 12–13–06; 8:45 am]

BILLING CODE 4163–70–P

DEPARTMENT OF HEALTH AND HUMAN SERVICES

Centers for Disease Control and Prevention

[30 Day–07–0641]

Proposed Data Collections Submitted for Public Comment and Recommendations

The Centers for Disease Control and Prevention (CDC) publishes a list of information collection requests under review by the Office of Management and Budget (OMB) in compliance with the Paperwork Reduction Act (44 U.S.C. Chapter 35). To request a copy of these requests, call the CDC Reports Clearance Officer at 404–639–4604 or send a e-mail to *omb@cdc.gov*. Send written comments to CDC Desk Officer, Office of Management and Budget, Washington, DC or by fax to (202) 395–6974. Written comments should be received within 30 days of this notice.

Background and Brief Description

Descriptive Epidemiology of Missed or Delayed Diagnoses for Conditions Detected by Newborn Screening—(OMB No. 0920–0641)—Revision—National Center for Environmental Health (NCEH), Centers for Disease Control and Prevention (CDC). Every state in the United States and Washington, DC, has a public health program to test newborn babies for congenital metabolic and other disorders through laboratory testing of dried blood spots. These programs screen for between four and 36 different conditions including phenylketonuria (PKU) and congenital hypothroidism, with testing performed in both state laboratories and private laboratories contracted by state health departments. The screening process or system is broader than the state public health newborn screening program, which is composed only of the laboratory and follow-up personnel. Most children born with metabolic disease are identified in a timely manner and within the parameters defined by the newborn screening system of each state. These children are referred for diagnosis and treatment. However, some cases are not detected at all or the detection comes too late to prevent harm. These ''missed cases'' often result in severe morbidity such as mental retardation or death.

In this project, we will continue to collect information about missed or delayed diagnoses in order to update and expand a previous epidemiological study of missed cases of two disorders published in 1986. We will assess the number of cases of each disorder missed, and the potential reasons for the miss and legal outcomes. Data will be collected by asking state public health laboratory directors, newborn screening laboratory managers, follow-up coordinators, specialists at metabolic clinics, and parent groups with an interest in newborn screening for information regarding missed cases. An estimated 135 remaining respondents will participate in our study by completing one or two short questionnaires that ask for information regarding the details of any missed or delayed cases of which they are aware.

The survey will highlight procedures and actions taken by states and other participants in newborn screening systems to identify causes of missed cases and to modify policies and procedures to prevent or minimize recurrences. The information gleaned from this study may be used to help craft changes in the screening protocols that will make the process more organized and efficient and less likely to fail an affected child.

Respondent burden is approximately 3 minutes for the State Form and 10 minutes for the Case Report Form. There are no costs to the respondents other than their time. The total estimated annual burden hours are 28.

ESTIMATED ANNUALIZED BURDEN HOURS

Respondents	Form name	Number of respondents	Number of responses per respondent	Average burden (hours) per response	Total burden (hours)
Director, State Newborn Screening Laboratory.	State Form	25	1	3/60	1.3
	Case Report Form	25	1	10/60	4.2
Follow-up State Coordinator	State Form	25	1	3/60	1.3
	Case Report Form	25	1	10/60	4.2
Metabolic Clinic Employee	State Form	60	1	3/60	3
	Case Report Form	60	1	10/60	10
Parent Advocate	Case Report Form	5	1	10/60	0.8
Parent	Case Report Form	20	1	10/60	3.3

Dated: December 8, 2006.

Joan F. Karr,

Acting Reports Clearance Officer, Centers for Disease Control and Prevention.

[FR Doc. 06–9723 Filed 12–13–06; 8:45 am]

BILLING CODE 4163–18–M

DEPARTMENT OF HEALTH AND HUMAN SERVICES

Centers for Disease Control and Prevention

[60Day-07–05AJ]

Proposed Data Collections Submitted for Public Comment and Recommendations

In compliance with the requirement of Section 3506(c)(2)(A) of the Paperwork Reduction Act of 1995 for opportunity for public comment on proposed data collection projects, the Centers for Disease Control and Prevention (CDC) will publish periodic summaries of proposed projects. To request more information on the proposed projects or to obtain a copy of the data collection plans and instruments, call 404–639–5960 and send comments to Seleda Perryman, CDC Assistant Reports Clearance Officer, 1600 Clifton Road, MS–D74, Atlanta, GA 30333 or send an e-mail to *omb@cdc.gov.*

Comments are invited on: (a) Whether the proposed collection of information is necessary for the proper performance of the functions of the agency, including whether the information shall have practical utility; (b) the accuracy of the agency's estimate of the burden of the proposed collection of information; (c) ways to enhance the quality, utility, and clarity of the information to be collected; and (d) ways to minimize the burden of the collection of information on respondents, including through the use of automated collection techniques or other forms of information technology. Written comments should be received within 60 days of this notice.

Proposed Project

National Surveillance for Severe Adverse Events Associated with Treatment of Latent Tuberculosis Infection—New—Division of Tuberculosis Elimination (DTBE), National Center for HIV, STD, and TB Prevention (NCHSTP), Centers for Disease Control and Prevention (CDC).

Background and Brief Description

As part of the national TB elimination strategy, the American Thoracic Society and CDC have published recommendations for targeted testing for TB and treatment for latent TB infection (LTBI). However, between October 2000 and September 2004, the CDC received reports of 50 patients with severe adverse events associated with the use of the two or three-month regimen of rifampin and pyrazinamide (RZ) for the treatment of LTBI; 12 (24%) patients

died (Morbidity and Mortality Weekly Report 2003;52[31]:735–9). A severe adverse event is defined as hospitalization or death of a person receiving treatment for LTBI. On the basis of these data, the American Thoracic Society and CDC recommended that RZ should generally not be offered for treatment of persons with LTBI, regardless of HIV status. Rifampin and pyrazinamide should continue to be administered in multidrug regimens for the treatment of persons with active TB disease.

Reports of severe adverse events related to RZ and other older LTBI regimens have prompted a need for this three year project—a national surveillance system of such events. The objective of the project is to determine the annual number and temporal trends of severe adverse events (hospitalization or death) associated with any treatment for LTBI in the United States. Surveillance of such events will provide data to support periodic evaluation of guidelines for treatment of persons with LTBI and revision, as needed.

This project will set up a passive reporting system for severe adverse events (death or hospitalization) to therapy for LTBI. The system will rely on medical chart review of already existing data by TB control staff.

Potential respondents are any of the 60 reporting areas for the national TB surveillance system (the 50 states, the District of Columbia, New York City, Puerto Rico, and 8 jurisdictions in the Pacific and Caribbean). Data will be collected using the data collection form for adverse events associated with LTBI treatment (AELT). Based on previous reporting, CDC anticipates receiving an average of 3 responses per year from the 60 reporting areas. The AELT form is completed for each reported hospitalization or death related to treatment of LTBI and contains demographic, clinical, and laboratory information. CDC will analyze and periodically publish reports summarizing national LTBI treatment adverse events statistics and also will conduct special analyses for publication in peer-reviewed scientific journals to further describe and interpret these data.

The Food and Drug Administration (FDA) collects data on adverse events related to drugs through the FDA MedWatch Program. CDC is planning to collaborate with FDA in developing the national surveillance system for adverse events associated with treatment for LTBI. Reporting will be conducted through telephone, e-mail, or during CDC site visits. The only cost to respondents is their time to gather medical records to complete the form.

ESTIMATE OF ANNUALIZED BURDEN HOURS

Type of respondents	Number of respondents	Number of responses per respondent	Average burden per response (in hours)	Total burden (in hours)
Physicians	3	1	3	9
Nurses	3	1	4	12
Medical Clerk	3	1	1	3
Total				24

Dated: December 8, 2006.

Joan F. Karr,

Acting Reports Clearance Officer, Centers for Disease Control and Prevention.

[FR Doc. E6–21269 Filed 12–13–06; 8:45 am]

BILLING CODE 4163–18–P

DEPARTMENT OF HEALTH AND HUMAN SERVICES

Centers for Disease Control and Prevention

[30 Day–07–0128]

Agency Forms Undergoing Paperwork Reduction Act Review

The Centers for Disease Control and Prevention (CDC) publishes a list of information collection requests under review by the Office of Management and Budget (OMB) in compliance with the Paperwork Reduction Act (44 U.S.C. Chapter 35). To request a copy of these requests, call the CDC Reports Clearance Officer at (404) 639–5960 or send an e-mail to *omb@cdc.gov.* Send written comments to CDC Desk Officer, Office of Management and Budget, Washington, DC or by fax to (202) 395–6974. Written comments should be received within 30 days of this notice.

Proposed Project

Congenital Syphilis (CS) Case Investigation and Report Form (CDC73.126)—OMB No. 0920–0128—Extension—National Center for HIV/AIDS, Viral Hepatitis, STD, and TB Prevention (NCHHSTP), Coordinating Center for Infectious Diseases (CCID), Centers for Disease Control and Prevention (CDC).

Background and Brief Description

CDC proposes to continue data collection for congenital syphilis case investigations under the ''Congenital Syphilis (CS) Case Investigation and Report Form'' (CDC73.126, REV 10–2003). This form is currently approved under OMB No. 0920–0128, and is due to expire on 12/31/2006. This request is for a 3-year extension of OMB approval.

Reducing congenital syphilis is a national objective in the DHHS Report entitled Healthy People 2010 (Vol. I and II). Objective 25–9 of this document states the goal: ''Reduce congenital syphilis to 1 new case per 100,000 live births''. In order to meet this national objective, an effective surveillance system for congenital syphilis must be continued to monitor current levels of disease and progress towards the year 2010 objective. This data will also be used to develop intervention strategies and to evaluate ongoing control efforts.

Respondent burden is approximately 15 minutes per response for those who provide data electronically and 30 minutes per response for those who provide data via hard copy. The estimated annual number of cases expected to be reported using the current case definition is approximately 500. There are no costs to the respondents other than their time. The total estimated annual burden hours are 160.

ESTIMATED ANNUALIZED BURDEN HOURS

Respondents	Number of respondents	Average number of responses per respondent	Average burden per response (in hours)	Total burden (in hours)
Clerical and hospital staff of state and local health department STD project areas	50 (electronic data)	8	15/60	100
	15 (hardcopy data)	8	30/60	60

Dated: December 7, 2006.

Joan F. Karr,

Acting Reports Clearance Officer, Centers for Disease Control and Prevention.

[FR Doc. E6–21273 Filed 12–13–06; 8:45 am]

BILLING CODE 4163–18–P

DEPARTMENT OF HEALTH AND HUMAN SERVICES

Centers for Disease Control and Prevention

Mine Safety and Health Research Advisory Committee: Notice of Charter Renewal

This gives notice under the Federal Advisory Committee Act (Public Law 92–463) of October 6, 1972, that the Mine Safety and Health Research Advisory Committee, Centers for Disease Control and Prevention, Department of Health and Human Services, has been renewed for a 2-year period through November 30, 2008.

For information, contact Jeffrey Kohler, Ph.D., Executive Secretary, Mine Safety and Health Research Advisory Committee, Centers for Disease Control and Prevention, Department of Health and Human Services, 626 Cochrans Mill Road, Mailstop P05, Pittsburgh, Pennsylvania 15236, telephone 412/386–5301 or fax 404/386–5300.

The Director, Management Analysis and Services Office, has been delegated the authority to sign Federal Register notices pertaining to announcements of meetings and other committee management activities, for both the Centers for Disease Control and Prevention and the Agency for Toxic Substances and Disease Registry.

Dated: December 8, 2006.

Alvin Hall,

Director, Management Analysis and Services Office, Centers for Disease Control and Prevention.

[FR Doc. E6–21264 Filed 12–13–06; 8:45 am]

BILLING CODE 4163–18–P

DEPARTMENT OF HEALTH AND HUMAN SERVICES

Centers for Disease Control and Prevention

Decision To Evaluate a Petition To Designate a Class of Employees at Dow Chemical Company, Madison, IL, To Be Included in the Special Exposure Cohort

AGENCY: Centers for Disease Control and Prevention (CDC), Department of Health and Human Services (HHS).

ACTION: Notice.

SUMMARY: The Department of Health and Human Services (HHS) gives notice as required by 42 CFR § 83.12(e) of a decision to evaluate a petition to designate a class of employees at Dow Chemical Company, Madison, Illinois, to be included in the Special Exposure Cohort under the Energy Employees Occupational Illness Compensation Program Act of 2000. The initial proposed definition for the class being evaluated, subject to revision as warranted by the evaluation, is as follows:

Facility: Dow Chemical Company.

Location: Madison, Illinois.

Job Titles and/or Job Duties: All Atomic Weapons Employer employees who were monitored, or should have been monitored, for exposure to ionizing radiation while working for a number of work days aggregating at least 250 work days, either solely under this employment or in combination with work days within the parameters established for one or more other classes of employees in the Special Exposure Cohort.

Period of Employment: January 1, 1957 through December 21, 1960.

FOR FURTHER INFORMATION CONTACT: Larry Elliott, Director, Office of Compensation Analysis and Support, National Institute for Occupational Safety and Health, 4676 Columbia Parkway, MS C–46, Cincinnati, OH 45226, Telephone 513–533–6800 (this is not a toll-free number). Information requests can also be submitted by e-mail to *OCAS@CDC.GOV.*

Dated: December 7, 2006.

John Howard,

Director, National Institute for Occupational Safety and Health, Centers for Disease Control and Prevention.

[FR Doc. 06–9668 Filed 12–13–06; 8:45 am]

BILLING CODE 4163–19–M

DEPARTMENT OF HEALTH AND HUMAN SERVICES

National Institutes of Health

Government-Owned Inventions; Availability for Licensing

AGENCY: National Institutes of Health, Public Health Service, HHS.

ACTION: Notice.

SUMMARY: The inventions listed below are owned by an agency of the U.S. Government and are available for licensing in the U.S. in accordance with 35 U.S.C. 207 to achieve expeditious commercialization of results of federally funded research and development. Foreign patent applications are filed on selected inventions to extend market coverage for companies and may also be available for licensing.

ADDRESSES: Licensing information and copies of the U.S. patent applications listed below may be obtained by writing to the indicated licensing contact at the Office of Technology Transfer, National Institutes of Health, 6011 Executive Boulevard, Suite 325, Rockville, Maryland 20852–3804; telephone: 301/496–7057; fax: 301/402–0220. A signed Confidential Disclosure Agreement will be required to receive copies of the patent applications.

Peptide and Peptidomimetic Inhibitors of Smoothened Protein as Anti-neoplastic Agents

Description of Technology: Cancer is caused by the improper regulation of certain signaling proteins in the cell.

One of these pathways is the Hedgehog/Patched (HH/PTCH) pathway. Hedgehog is a secreted protein involved in the growth and development of embryonic cells. Patched is the receptor for hedgehog proteins and regulates a membrane protein called Smoothened (SMO). This pathway is activated in many tumor cells, including those in prostate, pancreas, stomach, and small cell cancer.

The technology is directed towards several synthetic peptides (including all-D analogs) corresponding to specific region of the SMO protein. Experiments *in vitro* demonstrate that they potentially suppress the growth of cancer cells and inhibit the expression of the HH/PTCH pathway genes. These novel SMO inhibitors are much more effective in inhibiting cell growth than currently available cyclopamine and cyclopamine derivatives. These novel peptides and their metabolically more stable analogs have a high potential for cancer therapy. Due to their high hydrophobic properties, these can be easily formulated for specific intratumor delivery or topical creams for skin disorders.

Applications and Modality: (1) A potent, highly soluble cancer therapeutic; (2) Novel compounds that inhibit HH/PTCH pathway genes; (3) Skin permeable compounds that can be formulated into topical creams for skin malignancies treatment and prevention and treatment of psoriasis.

Market: (1) 600,000 deaths from cancer related diseases estimated in 2006; (2) This technology involving therapeutics for the treatment of several cancers has a potential market of several billion U.S. dollars; (3) Psoriasis affects an estimated 2–3 percent of the world's population; (4) Dermatologic diseases affect an estimated 50 million Americans; (5) Skin therapeutic market is worth over $2 billion in annual sales of prescription medications with an estimated yearly growth rate of 5%;

(6) The overall annual cost of psoriasis treatment has been estimated to be from $650 million to $2 billion in the United States.

Development Status: The technology is currently in the pre-clinical stage of development.

Inventors: Nadia Tarasova, Michael Dean, and Lou Hong (NCI).

Related Publication: L Covic *et al.* Activation and inhibition of G protein-coupled receptors by cell-penetrating membrane-tethered peptides. Proc Natl Acad Sci USA. 2002 Jan 22; 99(2):643–648.

Patent Status: U.S. Provisional Application No. 60/855,422 filed 31 Oct 2006 (HHS Reference No. E–014–2007/0–US–01).

Licensing Status: Available for exclusive or non-exclusive licensing.

Licensing Contact: Jennifer Wong; 301/435–4633; *wongje@mail.nih.gov.*

Collaborative Research Opportunity: The NCI-Frederick Structural Biophysics Laboratory is seeking statements of capability or interest from parties interested in collaborative research to further develop, evaluate, or commercialize Peptide and Peptidomimetic Inhibitors of Smoothened Protein as Anti-neoplastic Agents. Please contact Betty Tong, Ph.D. at 301–594–4263 for more information.

Extracellular Matrix/Metastasis Modifier Genes as a Method for Characterization and Prevention of Metastatic Tumor

Description of Technology: To a large extent cancer mortality is due to metastatic disease than a primary tumor. Recent evidence suggests that metastatic disease can be an early event and in majority of patients metastasis starts by the time the disease is diagnosed. Thus there is a need for methods of characterizing the early metastatic process for better treatment of cancer.

This invention provides methods of characterizing the metastatic capacity of a tumor as well as inhibiting metastasis of a cancer cell. More specifically, this invention discloses an extracellular matrix (ECM) modifier protein named *Anakin*, detection of the *Anakin* protein as a marker for metastatic disease and use of *Anakin* as potential therapeutic target.

Applications and Modality: (1) Method of diagnosis for early metastasis and therapeutic inhibition of metastasis; (2) Nucleic acid sequence of *Anakin* protein, an extracellular matrix (ECM) modifier gene; (3) SiRNA sequences that inhibit *Anakin* expression as therapeutics; (4) Purified antibodies that recognize *Anakin* protein as a research reagent and in diagnostics related products.

Market: 600,000 deaths from cancer related diseases estimated in 2006.

Development Status: The technology is currently in the pre-clinical stage of development.

Inventors: Kent W. Hunter (NCI) *et al.*

Patent Status: U.S. Provisional Application No. 60/778,463 filed 31 Mar 2006 (HHS Reference No. E–125–2006/1–US–01).

Licensing Status: Available for exclusive and non-exclusive licensing.

Licensing Contact: Mojdeh Bahar, J.D.; 301/435–2950; *baharm@mail.nih.gov.*

Collaborative Research Opportunity: The NCI Laboratory of Population Genetics is seeking statements of capability or interest from parties interested in collaborative research to further develop, evaluate, or commercialize the use of Anakin as a prognostic tool for diagnosing breast cancer outcome. Please contact Betty Tong, Ph.D. at 301–594–4263 for more information.

Novel Treatments for Autoimmune Neuroinflammatory Diseases Including Multiple Sclerosis

Description of Technology: Multiple sclerosis is caused when T cells mistakenly attack myelin, the protective fatty layer surrounding neurons in the brain and spinal cord, to initiate autoimmune responses and inflammation of the central nervous system (CNS). An increase in T cell-endothelial cell interactions and/or increased infiltration of immune cells to the CNS may play a role in the onset and/or progression of this disease.

Researchers at the NIH previously reported that extracellular adherence protein (Eap) produced by *Staphylococcus aureus* interacts with intercellular adhesion molecule 1 to prevent beta2-integrin-dependent inflammatory cell recruitment. They have now shown that Eap administration to mice with experimental autoimmune encephalomyelitis, a condition thought to be a model for human multiple sclerosis, blocks T cell recruitment to the brains of the EAE affected mice, inhibits the onset of this disease, and reverses paralysis. Eap also reduces delayed-type hypersensitivity in affected mice by inhibiting T cell infiltration and plasma leakage.

Available for licensing are methods for administering an Eap agent in an amount that will treat or prevent autoimmune neuroinflammatory diseases such as multiple sclerosis, decrease the infiltration of immune cells to the central nervous system, and inhibit T cell-endothelial cell interactions.

Applications: (1) Potential non-toxic treatment for autoimmune neuroinflammatory diseases, such as multiple sclerosis; (2) Potential therapy for alleviating symptoms associated with multiple sclerosis such as paralysis.

Market: (1) In the United States, approximately 400,000 people are living with multiple sclerosis, and about 200 people are diagnosed with multiple sclerosis each week; (2) The average annual direct and indirect cost of multiple sclerosis in the United States is $23 billion.

Development Status: Animal data is available.

Inventors: Triantafyllos Chavakis (NCI) *et al.*

Publications:

(1) T Chavakis *et al. Staphylococcus aureus* extracellular adherence protein serves as anti-inflammatory by inhibiting the recruitment of host leukocytes. Nat Med. 2002 Jul;8(7):687–693.

(2) C Xie *et al.* Suppression of experimental autoimmune encephalomyelitis by extracellular adherence protein of *Staphylococcus aureus.* J Exp Med. 2006 Apr 17;203(4):985–994.

Patent Status: U.S. Provisional Application No. 60/771,884 filed 10 Feb 2006 (HHS Reference No. E–295–2005/0–US–01).

Availability: Available for exclusive and non-exclusive licensing.

Licensing Contact: Norbert Pontzer, Ph.D., J.D.; 301/435–5502; *pontzern@mail.nih.gov.*

Collaborative Research Opportunity: The National Cancer Institute Experimental Immunology Branch is seeking statements of capability or interest from parties interested in collaborative research to further develop, evaluate, or commercialize Novel Treatments for Autoimmune Neuroinflammatory Diseases including Multiple Sclerosis. Please contact Betty Tong, Ph.D. at 301–594–4263 for more information.

Gene Cassette for Enhancement of Protein Production

Description of Technology: There is a continuing market need for expression systems that improve recombinant protein production for disease therapeutics or research materials. The present invention describes a ''gene cassette'' containing the *aadA1* (aminoglycoside adenylyltransferase) gene that increases protein expression levels when incorporated into a bacterial or eukaryotic host genome. In bacterial systems, the inventors have shown that this gene cassette induces enhancement of protein production and accumulation. This inducement is not restricted by the nature of the vector, induction system or nature of protein. In particular, this invention has yielded 3-fold upregulation of anti-HIV peptide expression levels in a microbial microbicide (see reference below). This technology offers an effective mechanism for increased product yield that can be utilized for pharmaceutical or biotechnological applications.

Applications: (1) Affordable gene cassette that increases production of recombinant or native proteins with reduced culture volume and faster processing time; (2) Increases efficacy and potency of cell-based therapeutics that overexpress endogenous or heterologous proteins.

Market: (1) Producers of protein, peptide, or cell-based therapeutics who would benefit from enhanced protein expression; (2) Researchers worldwide who utilize expression systems for protein synthesis.

Development Status: System validated in bacterial cells. Development underway for use in eukaryotic expression systems.

Inventors: Shankar Adhya and Sudeshna Kar (NCI).

Publication: S Rao, S Hu, L McHugh, K Lueders, K Henry, Q Zhao, RA Fekete, S Kar, S Adhya, DH Hamer. Toward a live microbial microbicide for HIV: commensal bacteria secreting an HIV fusion inhibitor peptide. Proc Natl Acad Sci U S A. 2005 Aug 23;102(34):11993–8. Epub 2005 Jul 22, doi 10.1073/pnas.0504881102.

Patent Status: U.S. Provisional Application No. 60/571,943 filed 18 May 2004 (HHS Reference No. E–261–2003/0–US–01); PCT Application No. PCT/US2005/17001 filed 17 May 2005, which published as WO 2005/116222 on 08 Dec 2005 (HHS Reference No. E–261–2003/0–PCT–02).

Licensing Status: Available for exclusive or non-exclusive licensing.

Licensing Contact: Tara L. Kirby, Ph.D.; 301/435–4426; *tarak@mail.nih.gov.*

Dated: December 6, 2006.

Steven M. Ferguson,

Director, Division of Technology Development and Transfer, Office of Technology Transfer, National Institutes of Health.

[FR Doc. E6–21301 Filed 12–13–06; 8:45 am]

BILLING CODE 4140–01–P

DEPARTMENT OF HEALTH AND HUMAN SERVICES

National Institutes of Health

National Cancer Institute; Notice of Closed Meetings

Pursuant to section 10(d) of the Federal Advisory Committee Act, as amended (5 U.S.C. Appendix 2), notice is hereby given of the following meetings.

The meetings will be closed to the public in accordance with the provisions set forth in sections 552b(c)(4) and 552b(c)(6), Title 5 U.S.C. as amended. The grant applications and the discussions could disclose confidential trade secrets or commercial property such as patentable material, and personal information concerning individuals associated with the grant applications, the disclosure of which would constitute a clearly unwarranted invasion of personal privacy.

Name of Committee: National Cancer Institute Special Emphasis Panel, Molecular Biology Special Emphasis Panel.

Date: January 29–31, 2007.

Time: 6 p.m. to 3 p.m.

Agenda: To review and evaluate grant applications.

Place: Marriott Conference Center, 5701 Marinelli Road, Bethesda, MD 20852.

Contact Person: Michael B Small, PhD, Scientific Review Administrator, Research Programs Review Branch, Division of Extramural Activities, National Cancer Institute, National Institutes of Health, 6116 Executive Blvd., Room 8127, Bethesda, MD 20892–8328, 301–402–0996, *smallm@mail.nih.gov.*

Name of Committee: National Cancer Institute Special Emphasis Panel, Clinical Studies Special Emphasis Panel.

Date: January 31–February 2, 2007.

Time: 6 p.m. to 5 p.m.

Agenda: To review and evaluate grant applications.

Place: Marriott Bethesda North Hotel and Conference Ctr., 5701 Marinelli Road, North Bethesda, MD 20852.

Contact Person: Majed M Hamawy, PhD, Scientific Review Administrator, Research Programs Review Branch, Division of Extramural Activities, National Cancer Institute, NIH, 6116 Executive Boulevard, Room 8133, Bethesda, MD 20852. 301–594–5659. *mh101v@nih.gov.*

(Catalogue of Federal Domestic Assistance Program Nos. 93.392, Cancer Construction; 93.393, Cancer Cause and Prevention Research; 93.394, Cancer Detection and Diagnosis Research; 93.395, Cancer Treatment Research; 93.396, Cancer Biology Research; 93.397, Cancer Centers Support; 93.398, Cancer Research Manpower; 93.399, Cancer Control, National Institutes of Health, HHS)

Dated: December 6, 2006.

Anna Snouffer,

Acting Director, Office of Federal Advisory Committee Policy.

[FR Doc. 06–9696 Filed 12–13–06; 8:45 am]

BILLING CODE 4140–01–M

DEPARTMENT OF HEALTH AND HUMAN SERVICES

National Institutes of Health

National Heart, Lung, and Blood Institute; Notice of Closed Meetings

Pursuant to section 10(d) of the Federal Advisory Committee Act, as amended (5 U.S.C. Appendix 2), notice is hereby given of the following meetings.

The meetings will be closed to the public in accordance with the provisions set forth in sections

552b(c)(4) and 552b(c)(6), Title 5 U.S.C., as amended. The grant applications and the discussions could disclose confidential trade secrets or commercial property such as patentable material, and personal information concerning individuals associated with the grant applications, the disclosure of which would constitute a clearly unwarranted invasion of personal privacy.

Name of Committee: National Heart, Lung, and Blood Institute Special Emphasis Panel, Genetics Research Project.

Date: February 20, 2007.

Time: 3 p.m. to 5 p.m.

Agenda: To review and evaluate grant applications.

Place: National Institutes of Health, 6701 Rockledge Drive, Bethesda, MD 20892. (Telephone Conference Call).

Contact Person: Mark Roltsch, PhD, Scientific Review Administrator, Review Branch, NHLBI, National Institutes of Health, 6701 Rockledge Drive, Room 7192, Bethesda, MD 20892, (301) 435–0285. *roltschm@mail.nih.gov.*

Name of Committee: National Heart, Lung, and Blood Institute Special Emphasis Panel, Clinical Investigator and Research Scientist Development Awards (KO2 & KO8's).

Date: February 22–23, 2007.

Time: 8 a.m. to 5 p.m.

Agenda: To review and evaluate grant applications.

Place: Sheraton Crystal City Hotel, 1800 Jefferson Davis Highway, Arlington, VA 22202.

Contact Person: Rina Das, PhD, Scientific Review Administrator, Review Branch, NHLBI, National Institutes of Health, 6701 Rockledge Drive, Room 7200, Bethesda, MD 20892, (301) 435–0297, *dasr2@nhibi.nih.gov.*

(Catalogue of Federal Domestic Assistance Program Nos. 93.233, National Center for Sleep Disorders Research; 93.837, Heart and Vascular Diseases Research; 93.838, Lung Diseases Research; 93.839, Blood Diseases and Resources Research, National Institutes of Health, HHS)

Dated: December 8, 2006.

Anna Snouffer,

Acting Director, Office of Federal Advisory Committee Policy.

[FR Doc. 06–9703 Filed 12–13–06; 8:45am]

BILLING CODE 4140–01–M

DEPARTMENT OF HEALTH AND HUMAN SERVICES

National Institutes of Health

National Institute of Child Health and Human Development; Notice of Closed Meeting

Pursuant to section 10(d) of the Federal Advisory Committee Act, as amended (5 U.S.C. Appendix 2), notice is hereby given of the following meeting.

The meeting will be closed to the public in accordance with the provisions set forth in sections 552b(c)(4) and 552b(c)(6), Title 5 U.S.C., as amended. The grant applications and the discussions could disclose confidential trade secrets or commercial property such as patentable material, and personal information concerning individuals associated with the grant applications, the disclosure of which would constitute a clearly unwarranted invasion of personal privacy.

Name of Committee: National Institute of Child Health and Human Development Special Emphasis Panel, Prenatal Virally Induced Brain Disorder in Mouse.

Date: December 14, 2006.

Time: 1 p.m. to 2:30 p.m.

Agenda: To review and evaluate grant applications.

Place: National Institutes of Health, 6100 Executive Boulevard, Room 5B01, Rockville, MD 20852 (Telephone Conference Call).

Contact Person: Norman Chang, PhD, Scientific Review Administrator, Division of Scientific Review, National Institute of Child Health and Human Development, NIH, 6100 Executive Blvd., Room 5B01, Bethesda, MD 20892. (301) 496–1485. *changn@mail.nih.gov.*

This notice is being published less than 15 days prior to the meeting due to the timing limitations imposed by the review and funding cycle.

(Catalogue of Federal Domestic Assistance Program Nos. 93.864, Population Research; 93.865, Research for Mothers and Children; 93.929, Center for Medical Rehabilitation Research; 93.209, Contraception and Infertility Loan Repayment Program, National Institutes of Health, HHS)

Dated: December 6, 2006.

Anna Snouffer,

Acting Director, Office of Federal Advisory Committee Policy.

[FR Doc. 06–9695 Filed 12–13–06; 8:45 am]

BILLING CODE 4140–01–M

DEPARTMENT OF HEALTH AND HUMAN SERVICES

National Institutes of Health

National Institute on Alcohol Abuse and Alcoholism; Notice of Closed Meeting

Pursuant to section 10(d) of the Federal Advisory Committee Act, as amended (5 U.S.C. Appendix 2), notice is hereby given of the following meeting.

The meeting will be closed to the public in accordance with the provisions set forth in sections 552b(c)(4) and 552b(c)(6), Title 5 U.S.C., as amended. The grant applications and the discussions could disclose confidential trade secrets or commercial property such as patentable material, and personal information concerning individuals associated with the grant applications, the disclosure of which would constitute a clearly unwarranted invasion of personal privacy.

Name of Committee: National Institute on Alcohol Abuse and Alcoholism Initial Review Group, Health Services and Behavioral Research Review Subcommittee.

Date: March 28–29, 2007.

Time: 8:30 a.m. to 5 p.m.

Agenda: To review and evaluate grant applications.

Place: Doubletree Hotel & Executive Meeting Center, 8120 Wisconsin Ave., Bethesda, MD 20814.

Contact Person: Lorraine Gunzerath, PhD, MBA, Scientific Review Administrator, National Institute on Alcohol Abuse and Alcoholism, Office of Extramural Activities, Extramural Project Review Branch, 5635 Fishers Lane, Room 3043, Bethesda, MD 20892–9304, 301–443–2369, *lgunzera@mail.nih.gov.*

(Catalogue of Federal Domestic Assistance Program Nos. 93.271, Alcohol Research Career Development Awards for Scientists and Clinicians; 93.272, Alcohol National Research Service Awards for Research Training; 93.273, Alcohol Research Programs; 93.891, Alcohol Research Center Grants, National Institutes of Health, HHS)

Dated: December 6, 2006.

Anna Snouffer,

Acting Director, Office of Federal Advisory Committee Policy.

[FR Doc. 06–9697 Filed 12–13–06; 8:45 am]

BILLING CODE 4140–01–M

DEPARTMENT OF HEALTH AND HUMAN SERVICES

National Institutes of Health

National Institute on Alcohol Abuse and Alcoholism; Notice of Closed Meeting

Pursuant to section 10(d) of the Federal Advisory Committee Act, as amended (5 U.S.C. Appendix 2), notice is hereby given of the following meeting.

The meeting will be closed to the public in accordance with the provisions set forth in sections 552b(c)(4) and 552b(c)(6), Title 5 U.S.C., as amended. The grant applications and the discussions could disclose confidential trade secrets or commercial property such as patentable material, and personal information concerning individuals associated with the grant applications, the disclosure of which would constitute a clearly unwarranted invasion of personal privacy.

Name of Committee: National Institutes on Alcohol Abuse and Alcoholism Initial

Review Group, Biomedical Research Review Subcommittee.

Date: February 26–27, 2007.

Time: 8 p.m. to 5 p.m.

Agenda: To review and evaluate grant applications.

Place: Hyatt Regency Bethesda, 7400 Wisconsin Avenue, Bethesda, MD 20814.

Contact Person: Katrina L. Foster, PhD, Scientific Review Administrator, National Inst on Alcohol Abuse & Alcoholism, National Institutes of Health, 5635 Fishers Lane, Rm. 3042, Rockville, MD 20852, 301–443–4032, *katrina@mail.nih.gov.*

(Catalogue of Federal Domestic Assistance Program Nos. 93.271, Alcohol Research Career Development Awards for Scientists and Clinicians; 93.272, Alcohol National Research Service Awards for Research Training; 93.273, Alcohol Research Programs; 93.891, Alcohol Research Center Grants, National Institutes of Health, HHS)

Dated: December 5, 2006.

Anna Snouffer,

Acting Director, Office of Federal Advisory Committee Policy.

[FR Doc. 06–9698 Filed 12–13–06; 8:45 am]

BILLING CODE 4140–01–M

DEPARTMENT OF HEALTH AND HUMAN SERVICES

National Institutes of Health

National Institute of Biomedical Imaging and Bioengineering; Notice of Closed Meeting

Pursuant to section 10(d) of the Federal Advisory Committee Act, as amended (5 U.S.C. Appendix 2), notice is hereby given of the following meeting.

The meeting will be closed to the public in accordance with the provisions set forth in sections 552b(c)(4) and 552b(c)(6), Title 5 U.S.C., as amended. The grant applications and the discussions could disclose confidential trade secrets or commercial property such as patentable material, and personal information concerning individuals associated with the grant applications, the disclosure of which would constitute a clearly unwarranted invasion of personal privacy.

Name of Committee: National Institute of Biomedical Imaging and Bioengineering Special Emphasis Panel, ZEB1 OSR C M2 P LDMOS.

Date: February 15, 2007.

Time: 12 p.m. to 3 p.m.

Agenda: To review and evaluate grant applications.

Place: National Institutes of Health, Two Democracy Plaza, 6707 Democracy Boulevard, Suite 200 Large conference room, Bethesda, MD 20892 (Telephone Conference Call).

Contact Person: Prabha L. Atreya, PhD, Scientific Review Administrator, Office of Scientific Review, National Institute of Biomedical Imaging and Bioengineering, Bethesda, MD 20892. (301) 496–8633 *atreyapr@mail.nih.gov.*

Dated: December 5, 2006.

Anna Snouffer,

Acting Director, Office of Federal Advisory Committee Policy.

[FR Doc. 06–9699 Filed 12–13–06; 8:45 am]

BILLING CODE 4140–01–M

DEPARTMENT OF HEALTH AND HUMAN SERVICES

National Institutes of Health

National Institute of Neurological Disorders and Stroke; Notice of Closed Meeting

Pursuant to section 10(d) of the Federal Advisory Committee Act, as amended (5 U.S.C. Appendix 2), notice is hereby given of the following meeting.

The meeting will be closed to the public in accordance with the provisions set forth in sections 552b(c)(4) and 552b(c)(6), Title 5 U.S.C., as amended. The grant applications and the discussions could disclose confidential trade secrets or commercial property such as patentable material, and personal information concerning individuals associated with the grant applications, the disclosure of which would constitute a clearly unwarranted invasion of personal privacy.

Name of Committee: Training Grant and Career Development Review Committee.

Date: January 25–26, 2007.

Time: 8 a.m. to 5 p.m.

Agenda: To review and evaluate grant applications.

Place: The Carlyle Suite Hotel, 1731 New Hampshire Avenue, NW., Washington, DC 20009.

Contact Person: Raul A. Saavedra, PhD, Scientific Review Administrator, Scientific Review Branch, Division of Extramural Research, NINDS/NIH/DHHS, NSC; 6001 Executive Blvd., Ste. 3208, Bethesda, MD 20892–9529, 301–496–9223. *saavedrr@ninds.nih.gov.*

(Catalogue of Federal Domestic Assistance Program Nos. 93.853, Clinical Research Related to Neurological Disorders; 93.854, Biological Basis Research in the Neurosciences, National Institutes of Health, HHS)

Dated: December 5, 2006.

Anna Snouffer,

Acting Director, Office of Federal Advisory Committee Policy.

[FR Doc. 06–9701 Filed 12–13–06; 8:45 am]

BILLING CODE 4140–01–M

DEPARTMENT OF HEALTH AND HUMAN SERVICES

National Institutes of Health

National Institute on Deafness and Other Communication Disorders; Notice of Closed Meetings

Pursuant to section 10(d) of the Federal Advisory Committee Act, as amended (5 U.S.C. Appendix 2), notice is hereby given of the following meetings.

The meeting will be closed to the public in accordance with the provisions set forth in sections 552b(c)(4) and 52b(c)(6), Title 5 U.S.C., as amended. The grant applications and the discussions could disclose confidential trade secrets or commercial property such as patentable material, and personal information concerning individuals associated with the grant applications, the disclosure of which would constitute a clearly unwarranted invasion of personal privacy.

Name of Committee: National Institute on Deafness and Other Communication Disorders Special Emphasis Panel, Cochlear Implantation.

Date: January 16, 2007.

Time: 1:30 p.m. to 2:30 p.m.

Agenda: To review and evaluate grant applications.

Place: National Institutes of Health, 6120 Executive Blvd., Rockville, MD 20852 (Telephone Conference Call).

Contact Person: Shiguang Yang, DVM, PhD., Scientific Review Administrator, Division of Extramural Activities, NIDCD, NIH, 6120 Executive Blvd., Bethesda, MD 20892, 301–496–8683.

(Catalogue of Federal Domestic Assistance Program Nos. 93.173, Biological Research Related to Deafness and Communicative Disorders, National Institutes of Health, HHS)

Dated: December 8, 2006.

Anna Snouffer,

Acting Director, Office of Federal Advisory Committee Policy.

[FR Doc. 06–9706 Filed 12–13–06; 8:45 am]

BILLING CODE 4140–01–M

DEPARTMENT OF HEALTH AND HUMAN SERVICES

National Institutes of Health

National Institute on Alcohol Abuse and Alcoholism; Notice of Closed Meeting

Pursuant to section 10(d) of the Federal Advisory Committee Act, as amended (5 U.S.C. Appendix 2), notice is hereby given of the following meeting.

The meeting will be closed to the public in accordance with the

provisions set forth in sections 552b(c)(4) and 552b(c)(6), Title 5 U.S.C., as amended. The grant applications and the discussions could disclose confidential trade secrets or commercial property such as patentable material, and personal information concerning individuals associated with the grant applications, the disclosure of which would constitute a clearly unwarranted invasion of personal privacy.

Name of Committee: National Institute on Alcohol Abuse and Alcoholism Initial Review Group, Clinical and Treatment Subcommittee.

Date: March 1–2, 2007.

Time: 8:30 a.m. to 5 p.m.

Agenda: To review and evaluate grant applications.

Place: Double Tree Rockville, 1750 Rockville Pike, Rockville, MD 20852.

Contact Person: Katrina L. Foster, PhD., Scientific Review Administrator, National Institute on Alcohol Abuse & Alcoholism, National Institutes of Health, 5635 Fishers Lane, Rm. 3042, Rockville, MD 20852, 301–443–4032. *katrina@mail.nih.gov.*

(Catalogue of Federal Domestic Assistance Program Nos. 93.271, Alcohol Research Career Development Awards for Scientists and Clinicians; 93.272, Alcohol National Research Service Awards for Research Training; 93.273, Alcohol Research Programs; 93.891, Alcohol Research Center Grants, National Institutes of Health, HHS)

Dated: December 7, 2006.

Anna Snouffer,

Acting Director, Office of Federal Advisory Committee Policy.

[FR Doc. 06–9707 Filed 12–13–06; 8:45 am]

BILLING CODE 4140–01–M

DEPARTMENT OF HEALTH AND HUMAN SERVICES

National Institutes of Health

National Institute of Biomedical Imaging and Bioengineering; Notice of Meeting

Pursuant to section 10(d) of the Federal Advisory Committee Act, as amended (5 U.S.C. Appendix 2), notice is hereby given of a meeting of the National Advisory council for Biomedical Imaging and Bioengineering.

The meeting will be open to the public as indicated below, with attendance limited to space available. Individuals who plan to attend and need special assistance, such as sign language interpretation or other reasonable accommodations, should notify the contact Person listed below in advance of the meeting.

The meeting will be closed to the public in accordance with the provisions set forth in sections 552b(c)(4) and 552b(c)(6), Title 5 U.S.C., as amended. The grant applications and the discussions could disclose confidential trade secrets or commercial property such as patentable material, and personal information concerning individuals associated with the grant applications, the disclosure of which would constitute a clearly unwarranted invasion of personal privacy.

Name of Committee: National Advisory Council for Biomedical Imaging and Bioengineering, January 26, 2007 Council Meeting.

Date: January 26, 2007.

Open: 8:45 a.m. to 12:15 p.m.

Agenda: Report from the Institute Director, other Institute Staff and presentations of working group reports.

Place: Bethesda Marriott Suites, 6711 Democracy Boulevard, Bethesda, MD 20817.

Closed: 1:15 p.m. to 3:30 p.m.

Agenda: To review and evaluate grant applications.

Place: Bethesda Marriott Suite, 6711 Democracy Boulevard, Bethesda, MD 20817.

Contact Person: Anthony Demsey, PhD, Director, Office of Extramural Policy, National Institute of Biomedical Imaging and Bioengineering, 6701 Democracy Blvd., Room 241, Bethesda, MD 20892.

Any interested person may file written comments with the committee by forwarding the statement to the Contact Person listed on this notice. The statement should include the name, address, telephone number and when applicable, the business of professional affiliation of the interested person.

Information is also available on the Institute's/Center's home page: *http://www.nibib1.nih.gov/about/NACBIB/NACBIB.htm*, where an agenda and any additional information for the meeting will be posted when available.

Dated: December 7, 2006.

Anna Snouffer,

Acting Director, Office of Federal Advisory Committee Policy.

[FR Doc. 06–9708 Filed 12–13–06; 8:45 am]

BILLING CODE 4140–01–M

DEPARTMENT OF HEALTH AND HUMAN SERVICES

National Institutes of Health

National Institute on Drug Abuse; Notice of Closed Meetings

Pursuant to section 10(d) of the Federal Advisory Committee Act, as amended (5 U.S.C. Appendix 2), notice is hereby given of the following meetings.

The meetings will be closed to the public in accordance with the provisions set forth in sections 552b(c)(4) and 552b(c)(6), Title 5 U.S.C., as amended. The contract proposals and the discussions could disclose confidential trade secrets or commercial property such as patentable material, and personal information concerning individuals associated with the contract proposals, the disclosure of which would constitute a clearly unwarranted invasion of personal privacy.

Name of Committee: National Institute on Drug Abuse Special Emphasis Panel, State and Local Epidemiology Planning and Information Development.

Date: January 24–25, 2007.

Time: 9 a.m. to 5 p.m.

Agenda: To review and evaluate contract proposals.

Place: Courtyard by Marriott Rockville, 2500 Research Boulevard, Rockville, MD 20850.

Contact Person: Lyle Furr, Contract Review Specialist, Office of Extramural Affairs, National Institute on Drug Abuse, NIH, DHHS, Room 220, MSC 8401, 6101 Executive Boulevard, Bethesda, MD 20892–8401, (301) 435–1439, *lf33c.nih.gov*.

Name of Committee: National Institute on Drug Abuse Special Emphasis Panel, Development of Science Literacy Materials or Programs.

Date: February 7, 2007.

Time: 9 a.m. to 6 p.m.

Agenda: To review and evaluate contract proposals.

Place: Courtyard by Marriott Rockville, 2500 Research Boulevard, Rockville, MD 20850.

Contact Person: Lyle Furr, Contract Review Specialist, Office of Extramural Affairs, National Institute on Drug Abuse, NIH, DHHS, Room 220, MSC 8401, 6101 Executive Boulevard, Bethesda, MD 20892–8401, (301) 435–1439, *lf33c.nih.gov*.

Name of Committee: National Institute on Drug Abuse Special Emphasis Panel, Mechanisms and Methods to Maximize Data Utilization.

Date: February 21, 2007.

Time: 9 a.m. to 6 p.m.

Agenda: To review and evaluate contract proposals.

Place: Courtyard by Marriott Rockville, 2500 Research Boulevard, Rockville, MD 20850.

Contact Person: Lyle Furr, Contract Review Specialist, Office of Extramural Affairs, National Institute on Drug Abuse, NIH, DHHS, Room 220, MSC 8401, 6101 Executive Boulevard, Bethesda, MD 20892–8401, (301) 435–1439, *if33c.nih.gov*.

Name of Committee: National Institue on Drug Abuse Special Emphasis Panel, Development of Practical Training Materials for Evidence-Based Treatment.

Date: March 13, 2007.

Time: 9 a.m. to 6 p.m.

Agenda: To review and evaluate contract proposals.

Place: Courtyard by Marriott Rockville, 2500 Research Boulevard, Rockville, MD 20850.

Contact Person: Lyle Furr, Contract Review Specialist, Office of Extramural Affairs, National Institute on Drug Abuse, NIH, DHHS, Room 220, MSC 8401, 6101 Executive Boulevard, Bethesda, MD 20892–8401, (301) 435–1439, *if33c.nih.gov*.

(Catalogue of Federal Domestic Assistance Program Nos. 93.279, Drug Abuse and Addiction Research Programs, National Institutes of Health, HHS)

Dated: December 8, 2006.

Anna Snouffer,

Acting Director, Office of Federal Advisory Committee Policy.

[FR Doc. 06–9709 Filed 12–13–06; 8:45 am]

BILLING CODE 4140–01–M

DEPARTMENT OF HEALTH AND HUMAN SERVICES

National Institutes of Health

National Institute on Drug Abuse; Notice of Meeting

Pursuant to section 10(d) of the Federal Advisory Committee Act, as amended (5 U.S.C. Appendix 2), notice is hereby given of a meeting of the National Advisory Council on Drug Abuse.

The meeting will be open to the public as indicated below, with attendance limited to space available. Individuals who plan to attend and need special assistance, such as sign language interpretation or other reasonable accommodations, should notify the Contact Person listed below in advance of the meeting.

The meeting will be closed to the public in accordance with the provisions set forth in sections 552b(c)(4) and 552b(c)(6), Title 5 U.S.C., as amended. The grant applications and the discussions could disclose confidential trade secrets or commercial property such as patentable material, and personal information concerning individuals associated with the grant applications, the disclosure of which would constitute a clearly unwarranted invasion of personal privacy.

Name of Committee: National Advisory Council on Drug Abuse.

Date: February 6–7, 2007.

Closed: February 6, 2007, 3 p.m. to 5 p.m.

Agenda: To review and evaluate grant applications.

Place: National Institutes of Health, Neuroscience Center, 6001 Executive Boulevard, Rockville, MD 20852.

Open: February 7, 2007, 8:30 a.m. to 1:30 p.m.

Agenda: This portion of the meeting will be open to the public for announcements and reports of administration, legislative, and program developments in the drug abuse field.

Place: National Institutes of Health, Neuroscience Center, 6001 Executive Boulevard, Rockville, MD 20852.

Contact Person: Teresa Levitin, PhD, Director, Office of Extramural Affairs, National Institute on Drug Abuse, NIH, DHHS, Room 220, MSC 8401, 6101 Executive Boulevard, Bethesda, MD 20892–8401, (301) 443–2755.

Any member of the public interested in presenting oral comments to the committee may notify the Contact Person listed on this notice at least 10 days in advance of the meeting. Interested individuals and representatives of organizations may submit a letter of intent, a brief description of the organization represented, and a short description of the oral presentation. Only one representative of an organization may be allowed to present oral comments and if accepted by the committee, presentations may be limited to five minutes. Both printed and electronic copies are requested for the record. In addition, any interested person may file written comments with the committee by forwarding their statement to the Contact Person listed on this notice. The statement should include the name, address, telephone number and when applicable, the business or professional affiliation of the interested person.

Information is also available on the Institute's/Center's home page: *http://www.drugabuse.gov/NACDA/NACDAHHome.html,* where an agenda and any additional information for the meeting will be posted when available.

(Catalogue of Federal Domestic Assistance Program Nos. 93.279, Drug Abuse and Addiction Research Programs, National Institutes of Health, HHS)

Dated: December 8, 2006.

Anna Snouffer,

Acting Director, Office of Federal Advisory Committee Policy.

[FR Doc. 06–9710 Filed 12–13–06; 8:45 am]

BILLING CODE 4140–01–M

DEPARTMENT OF HEALTH AND HUMAN SERVICES

National Institutes of Health

National Institute of Neurological Disorders and Stroke; Notice of Closed Meetings

Pursuant to section 10(d) of the Federal Advisory Committee Act, as amended (5 U.S.C. Appendix 2), notice is hereby given of the following meetings.

The meetings will be closed to the public in accordance with the provisions set forth in sections 552b(c)(4) and 552b(c)(6), Title 5 U.S.C., as amended. The grant applications and the discussions could disclose confidential trade secrets or commercial property such as patentable material, and personal information concerning individuals associated with the grant applications, the disclosure of which would constitute a clearly unwarranted invasion of personal privacy.

Name of Committee: National Institute of Neurological Disorders and Stroke Special Emphasis Panel, Epilepsy Clinical Trial.

Date: December 15, 2006.

Time: 8 a.m. to 5 p.m.

Agenda: To review and evaluate grant applications.

Place: The Watergate Hotel, 2650 Virginia Avenue, Washington, DC 20037.

Contact Person: Shantadurga Rajaram, PhD, Scientific Review Administrator, Scientific Review Branch, NIH/NINDS/Neuroscience Center, 6001 Executive Blvd., Suite 3208, Msc 9529, Bethesda, MD 20852, (301) 435–6033, *rajarams@mail.nih.gov.*

This notice is being published less than 15 days prior to the meeting due to the timing limitations imposed by the review and funding cycle.

Name of Committee: National Institute of Neurological Disorders and Stroke Special Emphasis Panel, WARCEF.

Date: December 21–22, 2006.

Time: 7 a.m. to 5 p.m.

Agenda: To review and evaluate grant applications.

Place: Hyatt Regency Bethesda, One Bethesda Metro Center, 7400 Wisconsin Avenue, Bethesda, MD 20814.

Contact Person: Katherine Woodbury, PhD., Scientific Review Administrator, Scientific Review Branch, NINDS/NIH/DHHS, Neuroscience Center, 6001 Executive Blvd., Suite 3208, Msc 9529, Bethesda, MD 20892–9529, (301) 496–5980, *kw47o@nih.gov.*

This notice is being published less than 15 days prior to the meeting due to the timing limitations imposed by the review and funding cycle.

Catalogue of Federal Domestic Assistance Program Nos. 93.853, Clinical Research Related to Neurological Disorders; 93.854, Biological Basis Research in the Neurosciences, National Institutes of Health, HHS)

Dated: December 8, 2006.

Anna Snouffer,

Acting Director, Office of Federal Advisory Committee Policy.

[FR Doc. 06–9711 Filed 12–13–06; 8:45 am]

BILLING CODE 4140–01–M

DEPARTMENT OF HEALTH AND HUMAN SERVICES

National Institutes of Health

National Institute on Deafness and Other Communication Disorders; Notice of Closed Meeting

Pursuant to section 10(d) of the Federal Advisory Committee Act, as amended (5 U.S.C. Appendix 2), notice is hereby given of the following meeting.

The meeting will be closed to the public in accordance with the provisions set forth in sections 552b(c)(4) and 552b(c)(6), Title 5 U.S.C., as amended. The grant applications and the discussions could disclose confidential trade secrets or commercial property such as patentable material,

and personal information concerning individuals associated with the grant applications, the disclosure of which would constitute a clearly unwarranted invasion of personal privacy.

Name of Committee: National Institute on Deafness and Other Communication Disorders Special Emphasis Panel, Baloh P50 Review.

Date: January 18, 2007.

Time: 2:30 p.m. to 5 p.m.

Agenda: To review and evaluate grant applications.

Place: National Institutes of Health, 6120 Executive Blvd., Rockville, MD 20852. (Telephone Conference Call).

Contact Person: Shiguang Yang, DVM, PhD., Scientific Review Administrator, Division of Extramural Activities, NIDCD, NIH, 6120 Executive Blvd., Bethesda, MD 20892, 301–496–8683.

(Catalogue of Federal Domestic Assistance Program Nos. 93.173, Biological Research Related to Deafness and Communicative Disorders, National Institutes of Health, HHS)

Dated: December 8, 2006.

Anna Snouffer,

Acting Director, Office of Federal Advisory Committee Policy.

[FR Doc. 06–9712 Filed 12–13–06; 8:45 am]

BILLING CODE 4140–01–M

DEPARTMENT OF HEALTH AND HUMAN SERVICES

National Institutes of Health

Center for Scientific Review; Notice of Closed Meetings

Pursuant to section 10(d) of the Federal Advisory Committee Act, as amended (5 U.S.C. Appendix 2), notice is hereby given of the following meetings.

The meetings will be closed to the public in accordance with the provisions set forth in sections 552b(c)(4) and 552b(c)(6), Title 5 U.S.C., as amended. The grant applications and the discussions could disclose confidential trade secrets or commercial property such as patentable material, and personal information concerning individuals associated with the grant applications, the disclosure of which would constitute a clearly unwarranted invasion of personal privacy.

Name of Committee: Center for Scientific Review Special Emphasis Panel, Optimizing Stem Cell Grafts.

Date: December 12, 2006.

Time: 2 p.m. to 4:30 p.m.

Agenda: To review and evaluate grant applications.

Place: National Institutes of Health, 6701 Rockledge Drive, Bethesda, MD 20892 (Telephone Conference Call).

Contact Person: Lawrence Baizer, PhD, Scientific Review Administrator, Center for Scientific Review, National Institutes of Health, 6701 Rockledge Drive, Room 4152, MSC 7850, Bethesda, MD 20892. (301) 435–1257. *baizerl@csr.nih.gov.*

This notice is being published less than 15 days prior to the meeting due to the timing limitations imposed by the review and funding cycle.

Name of Committee: Center for Scientific Review Special Emphasis Panel, Bladder Cell Biology.

Date: December 22, 2006.

Time: 11 a.m. to 12 p.m.

Agenda: To review and evaluate grant applications.

Place: National Institutes of Health, 6701 Rockledge Drive, Bethesda, MD 20892 (Telephone Conference Call).

Contact Person: Daniel F. McDonald, PhD, Scientific Review Administrator, Chief, Renal and Urological Sciences IRG, Center for Scientific Review, National Institutes of Health, 6701 Rockledge Drive, Room 4214, MSC 7814, Bethesda, MD 20892. (301) 435–1215. *mcdonald@csr.nih.gov.*

Name of Committee: Health of the Population Integrated Review Group, Nursing Science: Adults and Older Adults Study Section.

Date: February 1–2, 2007.

Time: 8 a.m. to 5 p.m.

Agenda: To review and evaluate grant applications.

Place: Holiday Inn, Tysons Corner, 1960 Chain B ridge Road, McLean, VA 22102.

Contact Person: Gertrude K. McFarland, DNSC, FAAN, , PhD, Scientific Review Administrator, Center for Scientific Review, National Institutes of Health, 6701 Rockledge Drive, Room 3156, MSC 7770, Bethesda, MD 20892. (301) 435–1784. *mcfarlag@csr.nih.gov.*

Name of Committee: Integrative, Functional and Cognitive Neuroscience Integrated Review Group, Neurobiology of Motivated Behavior Study Section.

Date: February 1–2, 2007.

Time: 8 a.m. to 5 p.m.

Agenda: To review and evaluate grant applications.

Place: Hyatt Regency Bethesda, One Bethesda Metro Center, 7400 Wisconsin Avenue, Bethesda, MD 20814.

Contact Person: Gamil C. Debbas, PhD, Scientific Review Administrator, Center for Scientific Review, National Institutes of Health, 6701 Rockledge Drive, Room 5170, MSC 7844, Bethesda, MD 20892. (301) 435–1018. *debbasg@csr.nih.gov.*

Name of Committee: Surgical Sciences, Biomedical Imaging and Bioengineering Integrated Review Group, Bioengineering, Technology and Surgical Sciences Study Section.

Date: February 5–6, 2007.

Time: 8 a.m. to 4 p.m.

Agenda: To review and evaluate grant applications.

Place: Doubletree Hotel and Executive Meeting Center, 8120 Wisconsin Avenue, Bethesda, MD 20814.

Contact Person: Dharam S. Dhindsa, DVM, PhD, Scientific Review Administrator, Center for Scientific Review, National Institutes of Health, 6701 Rockledge Drive, Room 5110, MSC 7854, Bethesda, MD 20892. (301) 435–1174. *dhindsad@csr.nih.gov.*

Name of Committee: Molecular, Cellular and Developmental Neuroscience Integrated Review Group, Neural Degenerative Disorders and Glial Biology Study Section.

Date: February 5–6, 2007.

Time: 8 a.m. to 4 p.m.

Agenda: To review and evaluate grant applications.

Place: Embassy Suites at the Chevy Chase Pavilion, 4300 Military Road, NW, Washington, DC 20015.

Contact Person: Toby Behar, PhD, Scientific Review Administrator, Center for Scientific Review, National Institutes of Health, 6701 Rockledge Drive, Room 4136, MSC 7850, Bethesda, MD 20892. (301) 435–4433. *behart@csr.nih.gov.*

Name of Committee: Digestive Sciences Integrated Review Group, Hepatobiliary Pathophysiology Study Section.

Date: February 5–6, 2007.

Time: 8 a.m. to 4:30 p.m.

Agenda: To review and evaluate grant applications.

Place: Ritz-Carlton Hotel, 1700 Tysons Boulevard, McLean, VA 22102.

Contact Person: Rass M. Shayiq, PhD, Scientific Review Administrator, Center for Scientific Review, National Institutes of Health, 6701 Rockledge Drive, Room 2182, MSC 7818, Bethesda, MD 20892. (301) 435–2359. *shayiqr@csr.nih.gov.*

Name of Committee: Respiratory Sciences Integrated Review Group, Lung Injury, Repair, and Remodeling Study Section.

Date: February 5–6, 2007.

Time: 8 a.m. to 5 p.m.

Agenda: To review and evaluate grant applications.

Place: Hyatt Regency Bethesda, One Bethesda Metro Center, 7400 Wisconsin Avenue, Bethesda, MD 20814.

Contact Person: Ghenima Dirami, PhD, Scientific Review Administrator, Center for Scientific Review, National Institutes of Health, 6701 Rockledge Drive, Room 2159A, MSC 7818, Bethesda, MD 20892. 301–594–1321. *diramig@csr.nih.gov.*

Name of Committee: Genes, Genomes, and Genetics Integrated Review Group, Genomics, Computational Biology and Technology Study Section.

Date: February 5–6, 2007.

Time: 8:30 a.m. to 5 p.m.

Agenda: To review and evaluate grant applications.

Place: Beacon Hotel and Corporate Quarters, 1615 Rhode Island Avenue, NW., Washington, DC 20036.

Contact Person: Camilla E. Day, PhD, Scientific Review Administrator, Center for Scientific Review, National Institutes of Health, 6701 Rockledge Drive, Room 5148, MSC 7890, Bethesda, MD 20892. (301) 435–1037. *dayc@csr.nih.gov.*

Name of Committee: Biological Chemistry and Macromolecular Biophysics Integrated Review Group, Synthetic and Biological Chemistry A Study Section.

Date: February 7–8, 2007.

Time: 8 a.m. to 5 p.m.

Agenda: To review and evaluate grant applications.

Place: Churchill Hotel, 1914 Connecticut Avenue, NW., Washington, DC 20009.

Contact Person: Kathryn M. Koeller, PhD, Scientific Review Administrator, Center for Scientific Review, National Institutes of Health, 6701 Rockledge Drive, Room 4166, MSC 7806, Bethesda, MD 20892. (301) 435–2681. *koellerk@csr.nih.gov.*

Name of Committee: Oncological Sciences Integrated Review Group, Developmental Therapeutics Study Section.

Date: February 8–9, 2007.

Time: 8 a.m. to 5 p.m.

Agenda: To review and evaluate grant applications.

Place: The Fairmont Washington, DC, 2401 M Street, NW., Washington, DC 20037.

Contact Person: Sharon K. Gubanich, PhD, Scientific Review Administrator, Center for Scientific Review, National Institutes of Health, 6701 Rockledge Drive, Room 6204, MSC 7804, Bethesda, MD 20892. (301) 435–1767. *gubanics@csr.nih.gov.*

Name of Committee: Genes, Genomes, and Genetics Integrated Review Group, Molecular Genetics C Study Section.

Date: February 8–9, 2007.

Time: 8 a.m. to 4 p.m.

Agenda: To review and evaluate grant applications.

Place: George Washington University Inn, 824 New Hampshire Ave., NW., Washington, DC 20037.

Contact Person: Barbara Whitmarsh, PhD, Scientific Review Administrator, Center for Scientific Review, National Institutes of Health, 6701 Rockledge Drive, Room 2206, MSC 7890, Bethesda, MD 20892. (301) 435–4511. *whitmarshb@csr.nih.gov.*

Name of Committee: Cell Biology Integrated Review Group, Cell Structure and Function Study Section.

Date: February 8–9, 2007.

Time: 8 a.m. to 5:30 p.m.

Agenda: To review and evaluate grant applications.

Place: Hyatt Regency Baltimore, 300 Light Street, Baltimore, MD 21202.

Contact Person: Alexandra M. Ainsztein, PhD, Scientific Review Administrator, Center for Scientific Review, National Institutes of Health, 6701 Rockledge Drive, Room 5140, MSC 7840, Bethesda, MD 20892. (301) 451–3848. *ainsztea@csr.nih.gov.*

Name of Committee: Integrative, Functional and Cognitive Neuroscience Integrated Review Group, Auditory System Study Section.

Date: February 8–9, 2007.

Time: 8:30 a.m. to 5 p.m.

Agenda: To review and evaluate grant applications.

Place: Adam's Mark Hotel, 1550 Court Place, Denver, CO 80202.

Contact Person: Edwin C. Clayton, PhD, Scientific Review Administrator, Center for Scientific Review, National Institutes of Health, 6701 Rockledge Drive, Room 5095C, MSC 7844, Bethesda, MD 20892. (301) 402–1304. *claytone@csr.nih.gov.*

(Catalogue of Federal Domestic Assistance Program Nos. 93.306, Comparative Medicine; 93.333, Clinical Research, 93.306, 93.333, 93.337, 93.393–93.396, 93.837–93.844, 93.846–93.878, 93.892, 93.893, National Institutes of Health, HHS)

Dated: December 5, 2006.

Anna Snouffer,

Acting Director, Office of Federal Advisory Committee Policy.

[FR Doc. 06–9700 Filed 12–13–06; 8:45 am]

BILLING CODE 9140–01–M

DEPARTMENT OF HEALTH AND HUMAN SERVICES

National Institutes of Health

Center for Scientific Review; Amended Notice of Meeting

Notice is hereby given of a change in the meeting of the Center for Scientific Special Emphasis Panel, November 28, 2006, 11 a.m., to November 28, 2006, 4 p.m. National Institutes of Health, 6701 Rockledge Drive, Bethesda, MD 20892 which was published in the **Federal Register** on November 17, 2006, 71 FR 66958–66959.

The meeting will be held December 19, 2006. The meeting time and location remain the same. The meeting is closed to the public.

Dated: December 8, 2006.

Anna Snouffer,

Acting Director, Office of Federal Advisory Committee Policy.

[FR Doc. 06–9704 Filed 12–13–06; 8:45 am]

BILLING CODE 4140–01–M

DEPARTMENT OF HEALTH AND HUMAN SERVICES

National Institutes of Health

Center for Scientific Review; Notice of Closed Meetings

Pursuant to section 10(d) of the Federal Advisory Committee Act, as amended (5 U.S.C. Appendix 2), notice is hereby given of the following meetings.

The meetings will be closed to the public in accordance with the provisions set forth in sections 552b(c)(4) and 552b(c)(6), Title 5 U.S.C., as amended. The grant applications and the discussions could disclose confidential trade secrets or commercial property such as patentable material, and personal information concerning individuals associated with the grant applications, the disclosure of which would constitute a clearly unwarranted invasion of personal privacy.

Name of Committee: Center for Scientific Review Special Emphasis Panel, Computational Biophysics.

Date: February 1, 2007.

Time: 8 a.m. to 5 p.m.

Agenda: To review and evaluate grant applications.

Place: The Watergate, 2650 Virginia Avenue, NW., Washington, DC 20037.

Contact Person: James W. Mack, PhD., Scientific Review Administrator, Center for Scientific Review, National Institutes of Health, 6701 Rockledge Drive, Room 4154, MSC 7806, Bethesda, MD 20892, (301) 435–2037, *mackj2@csr.nih.gov.*

Name of Committee: Molecular, Cellular and Developmental Neuroscience Integrated Review Group, Neural Oxidative Metabolism and Death Study Section.

Date: February 5–6, 2007.

Time: 8 a.m. to 6 p.m.

Agenda: To review and evaluate grant applications.

Place: Hotel Nikko, 222 Mason Street, San Francisco, CA 94102.

Contact Person: Carol Hamelink, PhD., Scientific Review Administrator (Intern), Center for Scientific Review, National Institutes of Health, 6701 Rockledge Drive, Room 5040H, MSC 7850, Bethesda, MD 20892, (301) 451–1328, *hamelinc@csr.nih.gov.*

Name of Committee: Health of the Population Integrated Review Group, Epidemiology of Cancer Study Section.

Date: February 6–7, 2007.

Time: 8:30 a.m. to 5:30 p.m.

Agenda: To review and evaluate grant applications.

Place: The Yarrow Hotel, 1800 Park Avenue, Salt Lake City, UT 84060.

Contact Person: Denise Wiesch, PhD., Scientific Review Administrator, Center for Scientific Review, National Institutes of Health, 6701 Rockledge Drive, Room 3150, MSC 7770, Bethesda, MD 20892, (301) 435–0684, *wieschd@csr.nih.gov.*

Name of Committee: Biological Chemistry and Macromolecular Biophysics Integrated Review Group, Macromolecular Structure and Function C Study Section.

Date: February 8–9, 2007.

Time: 8 a.m. to 6 p.m.

Agenda: To review and evaluate grant applications.

Place: Henley Park Hotel, 926 Massachusetts Avenue, NW., Washington, DC 20001.

Contact Person: Arnold Revzin, PhD., Scientific Review Administrator, Center for Scientific Review, National Institutes of Health, 6701 Rockledge Drive, Room 4146, MSC 7824, Bethesda, MD 20892, (301) 435–1153, *revzina@csr.nih.gov.*

Name of Committee: Health of the Population Integrated Review Group, Community-Level Health Promotion Study Section.

Date: September 8–9, 2007.

Time: 8:30 a.m. to 1 p.m.

Agenda: To review and evaluate grant applications.

Place: Hotel Serrano, 405 Taylor Street, San Francisco, CA 94102.

Contact Person: William N. Elwood, PhD., Scientific Review Administrator, Center for Scientific Review, National Institutes of Health, 6701 Rockledge Drive, Room 3162, MSC 7770, Bethesda, MD 20892, (301) 435–1503, *elwoodwi@csr.nih.gov.*

Name of Committee: Biology of Development and Aging Integrated Review

Group, Aging Systems and Geriatrics Study Section.

Date: February 12, 2007.

Time: 8 a.m. to 6 p.m.

Agenda: To review and evaluate grant applications.

Place: Westin Los Angeles Airport, 5400 West Century Blvd., Los Angeles, CA 90045.

Contact Person: Francois Boller, MD, PhD., Scientific Review Administrator, Center for Scientific Review, National Institutes of Health, 6701 Rockledge Drive, Room 5040Q, MSC 7843, Bethesda, MD 20892, (301) 594–6421, *bollerf@csr.nih.gov*.

Name of Committee: Bioengineering Sciences & Technologies Integrated Review Group, Instrumentation and Systems Development Study Section.

Date: February 13–14, 2007.

Time: 8:30 a.m. to 5 p.m.

Agenda: To review and evaluate grant applications.

Place: Marriott Courtyard, 13480 Maxella Avenue, Marina Del Rey, CA 90043.

Contact Person: Ping Fan, MD, PhD, Scientific Review Administrator, Center for Scientific Review, National Institutes of Health, 6701 Rockledge Drive, Room 5154, MSC 7840, Bethesda, MD 20892, (301) 435–1740, *fanp@csr.nih.gov*.

Name of Committee: Biological Chemistry and Macromolecular Biophysics Integrated Review Group, Synthetic and Biological Chemistry B Study Section.

Date: February 14–15, 2007.

Time: 8:30 a.m. to 6 p.m.

Agenda: To review and evaluate grant applications.

Place: Doubletree Hotel, 8120 Wisconsin Avenue, Bethesda, MD 20814

Contact Person: Mike Radtke, PhD,, Scientific Review Administrator, Center for Scientific Review, National Institutes of Health, 6701 Rockledge Drive, Room 4176, MSC 7806, Bethesda, MD 20892, (301) 435–1728, *radtkem@csr.nih.gov*..

Name of Committee: Biobehavioral and Behavioral Processes Integrated Review Group, Language and Communication Study Section.

Date: February 15, 2007.

Time: 7:30 a.m. to 6:30 p.m.

Agenda: To review and evaluate grant applications.

Place: Crowne Plaza Union Square, 480 Sutter Street, San Francisco, CA 94108.

Contact Person: Weijia Ni, PhD., Scientific Review Administrator, Center for Scientific Review, National Institutes of Health, 6701 Rockledge Drive, Room 3184, MSC 7848, Bethesda, MD 20892, (301) 435–1507, *niw@csr.nih.gov.*

Name of Committee: Endocrinology, Metabolism, Nutrition and Reproductive Sciences Integrated Review Group, Pregnancy and Neonatology Study Section.

Date: February 15–16, 2007.

Time: 8 a.m. to 2 p.m.

Agenda: To review and evaluate grant applications.

Place: Hyatt Regency Bethesda, One Bethesda Metro Center, 7400 Wisconsin Avenue, Bethesda, MD 20814.

Contact Person: Michael Knecht, PhD., Scientific Review Administrator, Center for Scientific Review, National Institutes of Health, 6701 Rockledge Drive, Room 6176, MSC 7892, Bethesda, MD 20892, (301) 435–1046, *knechtm@csr.nih.gov.*

Name of Committee: Health of the Population Integrated Review Group, Social Sciences and Population Studies Study Section.

Date: February 15, 2007.

Time: 8 a.m. to 5 p.m.

Agenda: To review and evaluate grant applications.

Place: Admiral Fell Inn, 888 South Broadway, Baltimore, MD 21231.

Contact Person: Bob Weller, PhD., Scientific Review Administrator, Center for Scientific Review, National Institutes of Health, 6701 Rockledge Drive, Room 3160, MSC 7770, Bethesda, MD 20892, (301) 435–0694, *wellerr@csr.nih.gov.*

Name of Committee: Molecular, Cellular and Developmental Neuroscience Integrated Review Group, Biophysics of Neural Systems Study Section.

Date: February 15–16, 2007.

Time: 8 a.m. to 4 p.m.

Agenda: To review and evaluate grant applications.

Place: Georgetown Suites, 1111 30th Street, NW., Washington, DC 20007.

Contact Person: Geoffrey G. Schofield, PhD., Scientific Review Administrator, Center for Scientific Review, National Institutes of Health, 6701 Rockledge Drive, Room 4040–A, MSC 7850, Bethesda, MD 20892, (301) 435–1235, *geoffreys@csr.nih.gov.*

Name of Committee: Hematology Integrated Review Group, Erythrocyte and Leukocyte Biology Study Section.

Date: February 15, 2007.

Time: 8 a.m. to 6 p.m.

Agenda: To review and evaluate grant applications.

Place: Wyndham Washington, DC, 1400 M Street, NW., Washington, DC 20005.

Contact Person: Delia Tang, MD., Scientific Review Administrator, Center for Scientific Review, National Institutes of Health, 6701 Rockledge Drive, Room 4126, MSC 7802, Bethesda, MD 20892, (301) 435–2506, *tangd@csr.nih.gov.*

Name of Committee: Cell Biology Integrated Review Group, Biology and Diseases of the Posterior Eye Study Section.

Date: February 15–16, 2007.

Time: 8 a.m. to 5:30 p.m.

Agenda: To review and evaluate grant applications.

Place: Holiday Inn Georgetown, 2101 Wisconsin Avenue, NW., Washington, DC 20007.

Contact Person: Michael H. Chaitin, PhD, Scientific Review Administrator, Center for Scientific Review, National Institutes of Health, 6701 Rockledge Drive, Room 5202, MSC 7850, Bethesda, MD 20892, (301) 435–0910, *chaitinm@csr.nih.gov.*

Name of Committee: Health of the Population Integrated Review Group, Nursing Science: Children and Families Study Section.

Date: February 15, 2007.

Time: 8 a.m. to 5 p.m.

Agenda: To review and evaluate grant applications.

Place: Bethesda Marriott Suites, 6711 Democracy Boulevard, Bethesda, MD 20817.

Contact Person: Melinda Tinkle, PhD, Scientific Review Administrator, Center for Scientific Review, National Institutes of Health, 6701 Rockledge Drive, Room 3141, MSC 7770, Bethesda, MD 20892, (301) 594–6594, *tinklem@csr.nih.gov.*

Name of Committee: Surgical Sciences, Biomedical Imaging and Bioengineering Integrated Review Group, Biomedical Imaging Technology Study Section.

Date: February 15–16, 2007.

Time: 8 a.m. to 4 p.m.

Agenda: To review and evaluate grant applications.

Place: Bahia Resort Hotel, 996 West Mission Bay Drive, San Diego, CA 92109.

Contact Person: Lee Rosen, PhD, Scientific Review Administrator, Center for Scientific Review, National Institutes of Health, 6701 Rockledge Drive, Room 5116, MSC 7854, Bethesda, MD 20892, (301) 435–1171, *rosenl@csr.nih.gov.*

Name of Committee: Risk, Prevention and Health Behavior Integrated Review Group, Psychosocial Risk and Disease Prevention Study Section.

Date: February 15–16, 2007.

Time: 8 a.m. to 5 p.m.

Agenda: To review and evaluate grant applications.

Place: St. Gregory Hotel, 2033 M Street, NW., Washington, DC 20036.

Contact Person: Martha Faraday, PhD, Scientific Review Administrator, Center for Scientific Review, National Institutes of Health, 6701 Rockledge Drive, Room 3110, MSC 7808, Bethesda, MD 20892, (301) 435–3575, *faraday@csr.nih.gov.*

Name of Committee: Surgical Sciences, Biomedical Imaging and Bioengineering Integrated Review Group, Medical Imaging Study Section.

Date: February 15–16, 2007.

Time: 8 a.m. to 4 p.m.

Agenda: To review and evaluate grant applications.

Place: Bahia Resort Hotel, 996 West Mission Bay Drive, San Diego, CA 92109.

Contact Person: Eileen W. Bradley, DSC, Scientific Review Administrator and Chief, Center for Scientific Review, National Institutes of Health, 6701 Rockledge Drive, Room 5100, MSC 7854, Bethesda, MD 20892, (301) 435–1179, *bradleye@csr.nih.gov.*

Name of Committee: Cardiovascular Sciences Integrated Review Group, Cardiovascular Differentiation and Development Study Section.

Date: February 15–16, 2007.

Time: 8 a.m. to 2 p.m.

Agenda: To review and evaluate grant applications.

Place: Wyndham Washington, DC, 1400 M Street, NW., Washington, DC 20005.

Contact Person: Maqsood A. Wani, Ph.D, DVM, Scientific Review Administrator, Center for Scientific Review, National Institutes of Health, 6701 Rockledge Drive, Room 2114, MSC 7814, Bethesda, MD 20892, 301–435–2270, *wanimaqs@csr.nih.gov.*

Name of Committee: Biological Chemistry and Macromolecular Biophysics Integrated Review Group, Biochemistry and Biophysics of Membranes Study Section.

Date: February 15–16, 2007.

Time: 8:30 a.m. to 6 p.m.

Agenda: To review and evaluate grant applications.

Place: Churchill Hotel, 1914 Connecticut Avenue, NW., Washington, DC 20009.

Contact Person: Nuria E. Assa-Munt, PhD., Scientific Review Administrator, Center for Scientific Review, National Institutes of Health, 6701 Rockledge Drive, Room 4164, MSC 7806, Bethesda, MD 20892, (301) 451–1323, *assamunu@csr.nih.gov.*

Name of Committee: Molecular, Cellular and Developmental Neuroscience Integrated Review Group, Neurogenesis and Cell Fate Study Section.

Date: February 15–16, 2007.

Time: 8:30 a.m. to 6 p.m.

Agenda: To review and evaluate grant applications.

Place: Melrose Hotel, 2430 Pennsylvania Ave., NW., Washington, DC 20037.

Contact Person: Lawrence Baizer, PhD., Scientific Review Administrator, Center for Scientific Review, National Institutes of Health, 6701 Rockledge Drive, Room 4152, MSC 7850, Bethesda, MD 20892, (301) 435–1257, *baizerl@csr.nih.gov.*

(Catalogue of Federal Domestic Assistance Program Nos. 93.306, Comparative Medicine; 93.333, Clinical Research, 93.306, 93.333, 93.337, 93.393–93.396, 93.837–93.844, 93.846–93.878, 93.892, 93.893, National Institutes of Health, HHS)

Dated: December 8, 2006.

Anna Snouffer,

Acting Director, Office of Federal Advisory Committee Policy.

[FR Doc. 06–9705 Filed 12–13–06; 8:45 am]

BILLING CODE 4140–01–M

DEPARTMENT OF HOMELAND SECURITY

Coast Guard

[USCG–2006–25800]

Collection of Information Under Review by Office of Management and Budget: OMB Control Numbers: 1625–0012

AGENCY: Coast Guard, DHS.

ACTION: Request for comments.

SUMMARY: In compliance with the Paperwork Reduction Act of 1995, this request for comments announces that the Coast Guard is forwarding an Information Collection Request (ICR), abstracted below, to the Office of Information and Regulatory Affairs (OIRA) of the Office of Management and Budget (OMB) to request an extension of their approval of the following collections of information. The ICR is 1625–0012, Certificate of Discharge to Merchant Mariners. Our ICR describes the information we seek to collect from the public. Review and comments by OIRA ensure we only impose paperwork burdens commensurate with our performance of duties.

DATES: Please submit comments on or before January 16, 2007.

ADDRESSES: To make sure that your comments and related material do not reach the docket [USCG–2006–25800] or OIRA more than once, please submit them by only one of the following means:

(1)(a) By mail to the Docket Management Facility, U.S. Department of Transportation (DOT), room PL–401, 400 Seventh Street, SW., Washington, DC 20590–0001. (b) By mail to OIRA, 725 17th Street, NW., Washington, DC 20503, to the attention of the Desk Officer for the Coast Guard.

(2)(a) By delivery to room PL–401 at the address given in paragraph (1)(a) above, between 9 a.m. and 5 p.m., Monday through Friday, except Federal holidays. The telephone number is (202) 366–9329. (b) By delivery to OIRA, at the address given in paragraph (1)(b) above, to the attention of the Desk Officer for the Coast Guard.

(3) By fax to (a) the Facility at (202) 493–2298 or by contacting (b) OIRA at (202) 395–6566. To ensure your comments are received in time, mark the fax to the attention of Mr. Nathan Lesser, Desk officer for the Coast Guard.

(4)(a) Electronically through the Web site for the Docket Management System (DMS) at *http://dms.dot.gov*. (b) By e-mail to *nlesser@omb.eop.gov*.

The Docket Management Facility maintains the public docket for this notice. Comments and material received from the public, as well as documents mentioned in this notice as being available in the docket, will become part of this docket and will be available for inspection or copying at room PL–401 on the Plaza level of the Nassif Building, 400 Seventh Street, SW., Washington, DC, between 9 a.m. and 5 p.m., Monday through Friday, except Federal holidays. You may also find this docket on the Internet at *http://dms.dot.gov*.

A copy of the complete ICR is available through this docket on the Internet at *http://dms.dot.gov*, and also from Commandant (CG–611), U.S. Coast Guard Headquarters, room 10–1236 (Attn: Mr. Arthur Requina), 2100 2nd Street, SW., Washington, DC 20593–0001. The telephone number is (202) 475–3523.

FOR FURTHER INFORMATION CONTACT: Mr. Arthur Requina, Office of Information Management, telephone (202) 475–3523 or fax (202) 475–3929, for questions on these documents; or Ms. Renee V. Wright, Program Manager, Docket Operations, (202) 493–0402, for questions on the docket.

SUPPLEMENTARY INFORMATION: The Coast Guard invites comments on the proposed collection of information to determine whether the collection is necessary for the proper performance of the functions of the Department. In particular, the Coast Guard would appreciate comments addressing: (1) The practical utility of the collections; (2) the accuracy of the estimated burden of the collections; (3) ways to enhance the quality, utility, and clarity of the information that is the subject of the collections; and (4) ways to minimize the burden of collections on respondents, including the use of automated collection techniques or other forms of information technology.

Comments to DMS or OIRA must contain the OMB Control Number of the ICR addressed. Comments to DMS must contain the docket number of this request, [USCG 2006–25800]. For your comments to OIRA to be considered, it is best if OIRA receives them on or before the January 16, 2007.

Public participation and request for comments: We encourage you to respond to this request by submitting comments and related materials. We will post all comments received, without change, to *http://dms.dot.gov*, they will include any personal information you have provided. We have an agreement with DOT to use their Docket Management Facility. Please see the paragraph on DOT's ''Privacy Act Policy'' below.

Submitting comments: If you submit a comment, please include your name and address, identify the docket number for this request for comment [USCG–2006–25800], indicate the specific section of this document or the ICR to which each comment applies, and give the reason for each comment. You may submit your comments and material by electronic means, mail, fax, or delivery to the Docket Management Facility at the address under **ADDRESSES**, but please submit them by only one means. If you submit them by mail or delivery, submit them in an unbound format, no larger than 8½ by 11 inches, suitable for copying and electronic filing. If you submit them by mail and would like to know that they reached the Facility, please enclose a stamped, self-addressed postcard or envelope.

The Coast Guard and OIRA will consider all comments and material received during the comment period. We may change the documents supporting this collection of information or even the underlying requirements in view of them.

Viewing comments and documents: To view comments, as well as documents mentioned in this notice as being available in the docket, go to *http://dms.dot.gov* at any time and conduct a simple search using the docket number. You may also visit the Docket Management Facility in room PL–401 on the Plaza level of the Nassif Building, 400 Seventh Street, SW., Washington, DC, between 9 a.m. and 5 p.m., Monday through Friday, except Federal holidays.

Privacy Act: Anyone can search the electronic form of all comments received in dockets by the name of the individual submitting the comment (or signing the comment, if submitted on behalf of an association, business, labor union, etc.). You may review the Privacy Act Statement of DOT in the **Federal Register** published on April 11, 2000 (65 FR 19477), or you may visit *http://dms.dot.gov*.

Previous Request for Comments.

This request provides a 30-day comment period required by OIRA. On September 19, 2006, the Coast Guard published a notice (71 FR 54830) and provided a 60-day comment period as required by 44 U.S.C. 3506(c)(2). That notice elicited no comments. The proposed information collection request (83–I form and supporting statement) we reference in that notice and filed in our docket, indicated a request for an extension of a currently approved collection, but erroneously made reference to a period other than the standard 3-year period. We have corrected that item on the 83–I to reflect the standard 3-year extension.

Information Collection Request

Title: Certificate of Discharge to Merchant Mariners.

OMB Control Number: 1625–0012.

Type of Request: Extension of a currently approved collection.

Affected Public: Masters or mates of shipping companies and merchant mariners.

Forms: CG–718A.

Abstract: Under 46 U.S.C. 10311, the Coast Guard prescribes the form of the Certificate of Discharge for Merchant Mariners. The Certificate provides merchant mariners with evidence of sea service to determine eligibility for various benefits, such as medical and retirement. The information collected is also used to show eligibility for an original, renewed, upgraded license or merchant mariner document to develop maritime sea service statistics, and to provide information to the U.S. Maritime Administration (MARAD) on the availability of mariners in a time of national emergency. The Coast Guard's Sea Service database captures the information from the Certificates of Discharge and is used by the Coast Guard's Regional Examination Centers to evaluate the qualifications of mariners who apply for originals, renewals, upgrades to their license or merchant mariners' documents. The information from the database is compiled annually by MARAD to prepare congressionally mandated reports on mariner availability. Currently, the CG Form 718A, Continuous Discharge Book, is only available in booklet format utilizing carbon copies. The Coast Guard is revising this form so that it may be provided to the maritime community for downloading via the Internet. The new version still requires vessel master and discharged mariner signatures. This effort is intended to alleviate issues regarding form availability.

Burden Estimate: The estimated burden has decreased from 4,500 hours to 1,800 hours a year.

Dated: December 8, 2006.

R.T. Hewitt,

Rear Admiral, Assistant Commandant for Command, Control, Communications, Computers and Information Technology.

[FR Doc. E6–21284 Filed 12–13–06; 8:45 am]

BILLING CODE 4910–15–P

DEPARTMENT OF HOMELAND SECURITY

Coast Guard

[USCG–2006–25898]

Collection of Information Under Review by Office of Management and Budget: OMB Control Numbers: 1625–0008

AGENCY: Coast Guard, DHS.

ACTION: Request for comments.

SUMMARY: In compliance with the Paperwork Reduction Act of 1995, this request for comments announces that the Coast Guard is forwarding an Information Collection Request (ICR), abstracted below, to the Office of Information and Regulatory Affairs (OIRA) of the Office of Management and Budget (OMB) to request an extension of their approval of the following collection of information. The ICR is 1625–0008, Regattas and Marine Parades. Our ICR describes the information we seek to collect from the public. Review and comments by OIRA ensure we only impose paperwork burdens commensurate with our performance of duties.

DATES: Please submit comments on or before January 16, 2007.

ADDRESSES: To make sure that your comments and related material do not reach the docket [USCG–2006–25898] or OIRA more than once, please submit them by only one of the following means:

(1)(a) By mail to the Docket Management Facility, U.S. Department of Transportation (DOT), room PL–401, 400 Seventh Street, SW., Washington, DC 20590–0001. (b) By mail to OIRA, 725 17th Street, NW., Washington, DC 20503, to the attention of the Desk Officer for the Coast Guard.

(2)(a) By delivery to room PL–401 at the address given in paragraph (1)(a) above, between 9 a.m. and 5 p.m., Monday through Friday, except Federal holidays. The telephone number is (202) 366–9329. (b) By delivery to OIRA, at the address given in paragraph (1)(b) above, to the attention of the Desk Officer for the Coast Guard.

(3) By fax to (a) the Facility at (202) 493–2298 or by contacting (b) OIRA at (202) 395–6566. To ensure your comments are received in time, mark the fax to the attention of Mr. Nathan Lesser, Desk officer for the Coast Guard.

(4)(a) Electronically through the Web site for the Docket Management System (DMS) at *http://dms.dot.gov*. (b) By e-mail to *nlesser@omb.eop.gov*.

The Docket Management Facility maintains the public docket for this notice. Comments and material received from the public, as well as documents mentioned in this notice as being available in the docket, will become part of this docket and will be available for inspection or copying at room PL–401 on the Plaza level of the Nassif Building, 400 Seventh Street, SW., Washington, DC, between 9 a.m. and 5 p.m., Monday through Friday, except Federal holidays. You may also find this docket on the Internet at *http://dms.dot.gov*.

Copies of the complete ICR is available through this docket on the Internet at *http://dms.dot.gov*, and also from Commandant (CG–611), U.S. Coast Guard Headquarters, room 10–1236 (Attn: Mr. Arthur Requina), 2100 2nd Street, SW., Washington, DC 20593–0001. The telephone number is (202) 475–3523.

FOR FURTHER INFORMATION CONTACT: Mr. Arthur Requina, Office of Information Management, telephone (202) 475–3523 or fax (202) 475–3929, for questions on these documents; or Ms. Renee V. Wright, Program Manager, Docket Operations, (202) 493–0402, for questions on the docket.

SUPPLEMENTARY INFORMATION: The Coast Guard invites comments on the

proposed collection of information to determine whether the collection is necessary for the proper performance of the functions of the Department. In particular, the Coast Guard would appreciate comments addressing: (1) The practical utility of the collections; (2) the accuracy of the estimated burden of the collections; (3) ways to enhance the quality, utility, and clarity of the information that is the subject of the collections; and (4) ways to minimize the burden of collections on respondents, including the use of automated collection techniques or other forms of information technology.

Comments to DMS or OIRA must contain the OMB Control Number of the ICRs addressed. Comments to DMS must contain the docket number of this request, [USCG 2006–25898]. For your comments to OIRA to be considered, it is best if OIRA receives them on or before the January 16, 2007.

Public participation and request for comments: We encourage you to respond to this request by submitting comments and related materials. We will post all comments received, without change, to *http://dms.dot.gov*, they will include any personal information you have provided. We have an agreement with DOT to use their Docket Management Facility. Please see the paragraph on DOT's ''Privacy Act Policy'' below.

Submitting comments: If you submit a comment, please include your name and address, identify the docket number for this request for comment [USCG–2006–25898], indicate the specific section of this document or the ICR to which each comment applies, and give the reason for each comment. You may submit your comments and material by electronic means, mail, fax, or delivery to the Docket Management Facility at the address under **ADDRESSES**, but please submit them by only one means. If you submit them by mail or delivery, submit them in an unbound format, no larger than 8½ by 11 inches, suitable for copying and electronic filing. If you submit them by mail and would like to know that they reached the Facility, please enclose a stamped, self-addressed postcard or envelope.

The Coast Guard and OIRA will consider all comments and material received during the comment period. We may change the documents supporting this collection of information or even the underlying requirements in view of them.

Viewing comments and documents: To view comments, as well as documents mentioned in this notice as being available in the docket, go to *http://dms.dot.gov* at any time and conduct a simple search using the docket number. You may also visit the Docket Management Facility in room PL–401 on the Plaza level of the Nassif Building, 400 Seventh Street, SW., Washington, DC, between 9 a.m. and 5 p.m., Monday through Friday, except Federal holidays.

Privacy Act: Anyone can search the electronic form of all comments received in dockets by the name of the individual submitting the comment (or signing the comment, if submitted on behalf of an association, business, labor union, etc.). You may review the Privacy Act Statement of DOT in the **Federal Register** published on April 11, 2000 (65 FR 19477), or you may visit *http://dms.dot.gov*.

Previous Request for Comments

This request provides a 30-day comment period required by OIRA. The Coast Guard has already published the 60-day notice (71 FR 57984, October 2, 2006) required by 44 U.S.C. 3506(c)(2). That notice elicited no comments.

Information Collection Request

Title: Regattas and Marine Parades.

OMB Control Number: 1625–0008.

Type of Request: Extension of a currently approved collection.

Affected Public: Sponsors of marine events.

Forms: CG–4423.

Abstract: Title 33 U.S.C. 1233, authorizes the Coast Guard to issue regulations to promote the safety of life on navigable waters during regattas or marine parades. The regulation requiring the submission of an application by individuals or organizations planning to hold a regatta or marine parade (marine events) that will introduce extra or unusual hazards to the safety of life on the navigable waters of the United States is in 33 CFR 100.15.

Burden Estimate: The estimated burden remains 3,000 hours a year.

Dated: December 8, 2006.

R.T. Hewitt,

Rear Admiral, Assistant Commandant for Command, Control, Communications, Computers and Information Technology.

[FR Doc. E6–21297 Filed 12–13–06; 8:45 am]

BILLING CODE 4910–15–P

DEPARTMENT OF THE INTERIOR

Geological Survey

Patent, Trademark & Copyright Acts

AGENCY: U.S. Geological Survey.

ACTION: Notice of Prospective Intent to Award Exclusive License.

SUMMARY: The United States Geological Survey (USGS) is contemplating awarding an exclusive license to: Williamson and Associates, 1124 NW., 53rd Street, Seattle, WA 98107 on U.S. Patent Nos. 6,236,211 B1 and 6,236,212 B1, both entitled ''Induced Polarization Method Using Towed Cable Carrying Transmitters and Receivers for identifying Minerals on the Ocean Floor.''

Inquiries: If other parties are interested in similar activities, or have comments related to the prospective awards, please contact Neil Mark, USGS, 12201 Sunrise Valley Drive, MS 201, Reston, Virginia 20192, voice (703) 648–4344, fax (703) 648–7219, or e-mail *nmark@usgs.gov.*

SUPPLEMENTARY INFORMATION: This notice is submitted to meet the requirements of 35 U.S.C. 208 *et seq.*

Dated: December 7, 2006.

Karen D. Baker,

Associate Director, Office of Administrative Policy and Services.

[FR Doc. 06–9690 Filed 12–13–06; 8:45 am]

BILLING CODE 4310–Y7–M

DEPARTMENT OF THE INTERIOR

National Park Service

Notice of Extension of Concession Contracts

AGENCY: National Park Service, Interior.

ACTION: Public Notice.

SUMMARY: Pursuant to 36 CFR 51.23, public notice is hereby given that the National Park Service proposes to extend the following expiring concession contracts for a period of up to one year, or until each time as a new contract is executed, whichever occurs sooner.

EFFECTIVE DATES: October 1, 2006.

FOR FURTHER INFORMATION CONTACT: Jo A. Pendry, Concession Program Manager, National Park Service, Washington, DC, 20240, Telephone 202/513–7156.

SUPPLEMENTARY INFORMATION: All of the listed concession authorizations will expire by their terms on or before September 30, 2006. The National Park Service has determined that the proposed short-term extensions are necessary in order to avoid interruption of visitor services and has taken all reasonable and appropriate steps to consider alternatives to avoid such interruption.

Concession

Contract number	Concessioner name	Park
GATE019–01	Dover Gourmet Corporation.	Gateway National Recreation Area.
INDE001–94	City Tavern, Concepts by Staid, Ltd.	Independence National Historical Park.
LARO003–92	Colville Tribal Enterprise Corporation.	Lake Roosevelt National Recreation Area.
STLI003–89 ..	ARAMARK Sports and Entertainment Services, Inc,.	Statue of Liberty National Monument.

Dated: November 30, 2006.

John Wessels,

Acting Assistant Director, Business Services.

[FR Doc. 06–9660 Filed 12–13–06; 8:45 am]

BILLING CODE 4312–53–M

DEPARTMENT OF THE INTERIOR

National Park Service

Notice of Continuation of Visitor Services

AGENCY: National Park Service, Interior.

ACTION: Public notice.

SUMMARY: Pursuant to the terms of existing concession contracts, public notice is hereby given that the National Park Service intends to request a continuation of visitor services for a period not-to-exceed 1 year from the date of contract expiration.

DATES: *Effective Date:* October 1, 2006.

FOR FURTHER INFORMATION CONTACT: Jo. A. Pendry, Concession Program Manager, National Park Service, Washington, DC 20240, Telephone, 202/513–7156.

SUPPLEMENTARY INFORMATION: The contracts listed below have been extended to maximum allowable under 36 CFR 51.23. Under the provisions of current concession contracts and pending the completion of the public solicitation of a prospectus for a new concession contract, the National Park Service authorizes continuation of visitor services for a period not-to-exceed 1 year under the terms and conditions of the current contract as amended. The continuation of operations does not affect any rights with respect to selection for award of a new concession contract.

Concession

Contract number	Concessional name	Park
BIBE002–82.	Forever Resorts, LLC.	Big Bend National Park.
BLRI007–82.	Forever Resorts, LLC.	Blue Ridge Parkway.
ISRO002–82.	Forever Resorts, LLC.	Isle Royale National Park.
JEFF002–95.	Jefferson National Parks Association.	Jefferson National Expansion Memorial.
LAME004–89.	Lake Mead Ferry Service, Inc.	Lake Mead National Recreation Area.
MACA002–82.	Forever Resorts, LLC.	Mammoth Cave National Park.
OLYM003–82.	Forever Resorts, LLC.	Olympic National Park.

Dated: November 30, 2006.

John Wessels,

Acting Assistant Director, Business Services.

[FR Doc. 06–9661 Filed 12–13–06; 8:45 am]

BILLING CODE 4313–53–M

DEPARTMENT OF THE INTERIOR

National Park Service

Notice of National Natural Landmark Designation for Irvine Ranch, Orange County, CA

AGENCY: National Park Service, Interior.

ACTION: Public notice of National Natural Landmark Designation.

SUMMARY: The Secretary of the Interior has determined that an area of 36,398 acres within the Irvine Ranch in Orange County, California meets the criteria for national significance and has designated this site a National Natural Landmark.

FOR FURTHER INFORMATION CONTACT: Steve Gibbons at 360–856–5700, extension 306.

SUPPLEMENTARY INFORMATION: On October 6, 2006, Interior Secretary Dirk Kempthorne designated a 36,398-acre area within Irvine Ranch in Orange County, California, as a National Natural Landmark. This area is significant for its Mediterranean shrublands, including extensive areas of chaparral and coastal sage scrub associations. It is one of the largest areas of this association remaining in the South Pacific Border Province. The Irvine Ranch NNL also represents a remarkably unique, long time-range stratigraphic succession that shows the linkage between tectonic framework, provenances, sedimentology, paleoenvironments, paleontology, paleoclimate, landscape evolution and geologic history. In this regard it represents one of the most critical time intervals and locations in the geologic history of the South Pacific Border Province.

The Secretary of the Interior established the National Natural Landmarks Program in 1962 under the authority of the Historic Sites Act of 1935 (16 U.S.C. 461 *et seq.*). The National Park Service (NPS) manages this program using regulations found at 36 CFR Part 62. Potential natural landmarks are identified in studies by the NPS and from other sources, evaluated by expert natural scientists, and, if determined nationally significant, designated as landmarks by the Secretary of the Interior. When designated, a landmark is included in the National Registry of Natural Landmarks, which currently lists 581 National Natural Landmarks nationwide. Of the 581 listed landmarks, half are administered solely by public agencies, i.e., Federal, State, county or municipal governments. Nearly one-third are owned solely by private parties. The remaining natural landmarks are owned or administered by a mixture of public and private owners. Owner permission must be obtained to visit natural landmarks that are privately owned or not managed for public access. Designation does not infer a right of public access.

National natural landmark designation is not a land withdrawal, does not change the ownership of an area and does not dictate activity. However, Federal agencies should consider impacts to the unique properties of these nationally significant areas in carrying out their responsibilities under the National Environmental Policy Act (42 U.S.C. 4321 *et seq.*). Designation could result in State or local planning or land use implications. National Natural Landmark preservation is made possible by the long-term, voluntary commitments of public and private owners to protect the outstanding values of the areas. Information on the National Natural Landmarks Program can be found on the Internet at *www.nature.nps.gov/nnl.*

Dated: December 7, 2006.

Margaret A. Brooks,

National Natural Landmarks Program Manager.

[FR Doc. 06–9692 Filed 12–13–06; 8:45 am]

BILLING CODE 4312–52–M

DEPARTMENT OF JUSTICE

Notice of Lodging of Consent Decree Under the Comprehensive Environmental Response, Compensation and Liability Act

Notice is hereby given that on October 13, 2006, a proposed Consent Decree (''Decree'') in *United States* v. *L.A.D. General Contractors, et al.,* Civil Action No. 06–4560 was lodged with the United States District Court for the Eastern District of Pennsylvania.

In this action the United States sought from defendants Andrew DiDio III, Laura Ann DiDio and LAD General Contractors, Inc. (a corporation owned and operated by the DiDio's) recovery of $1.16 million in response costs incurred by EPA at the Andela and River Bend Superfund Sites in Warwick Township, Bucks County, Pennsylvania. Defendants previously performed certain cleanup actions under EPA's direction. In this settlement, defendants will pay $100 to defray part of EPA's past costs. The amount of the settlement is based on defendants' very limited ability to pay. They receive from the United States a covenant not to sue under Sections 106 and 107(a) of the Comprehensive Environmental Response, Compensation, and Liability Act with respect to the Site.

The Department of justice will receive for a period of thirty (30) days from the date of this publication comments relating to the Decree. Comments should be addressed to the Assistant Attorney General, Environment and Natural Resources Division, P.O. Box 7611, U.S. Department of Justice, Washington, DC 20044–7611, and should refer to *United States* v. *L.A.D. General contractors, et al.* (E.D.Pa.), D.J. Ref. 90–11–3–08354/1.

The Decree may be examined at the Office of the United States Attorney, Eastern District of Pennsylvania, 615 Chestnut Street, Suite 1250, Philadelphia, PA 19106, and at U.S. EPA Region III, 150 arch Street, Philadelphia, PA 19103. During the public comment period, the Decree, may also be examined on the following Department of Justice Web site: *http://www.usdoj.gov/enrd/Consent_Decrees.html.* A copy of the Decree may also be obtained by mail from the Consent decree Library, P.O. Box 7611, U.S. Department of Justice, Washington, DC 20044–7611 or by faxing or e-mailing a request to Tonia Fleetwood (*tonia.fleetwood@usdoj.gov*), fax No. (202) 514–0097, phone confirmation number (202) 514–1547. In requesting a copy from the Consent Decree Library, please enclose a check in the amount of $4.00 (25 cents per page reproduction cost) payable to the U.S. Treasury or, if by email or fax, forward a check in that amount to the consent Decree Library at the stated address.

Robert Brook,

Assistant Chief, Environmental Enforcement Section, Environment and Natural Resources Division.

[FR Doc. 06–9672 Filed 12–13–06; 8:45 am]

BILLING CODE 4410–15–M

DEPARTMENT OF JUSTICE

Notice of Consent Decree Pursuant to the Clean Water Act

In accordance with Departmental Policy, 28 CFR 50.7, notice is hereby given that a proposed consent decree in *United States* v. *McCann Resources, Inc. and Mark W. McCann,* Civ. No. 04 cv 744 TCK–FHM (N.D. Ok.), DOJ #90–5–1–1–07876, was lodged in the United States District Court for the Northern District of Oklahoma on November 28, 2006. The Decree will resolve the liability of the named Defendants to the United States for their violations of Section 1423(b) of the Safe Drinking Water Act, 42 U.S.C. 300h–2(b), and Sections 301 and 311 of the Clean Water Act, 33 U.S.C. 1311 and 1321, and regulations promulgated thereunder, during their operation of oil production facilities in Osage County, Oklahoma.

Under the proposed Consent Decree, Defendants are required to perform injunctive relief at all their facilities in Oklahoma and jointly pay a civil penalty. Specifically, they will (a) take corrective action to bring the oil production facilities into compliance with federal law in accordance with the recommendations of an environmental consultant and other measures specified in the Decree, (b) remediate soils damaged by brine discharges, (c) adopt a stringent operation and maintenance program to prevent future discharges, (d) update Spill Prevention Control and Countermeasures plans, and (e) plug and/or test injection wells pursuant to Underground Injection Control regulations according to a schedule. Additionally, Defendants will jointly pay a civil penalty of $11,000 based on a qualified financial analyst's assessment of their limited ability to pay a penalty while performing injunctive relief.

The Department of Justice will receive for a period of thirty (30) days from the date of this publication comments relating to the proposed Consent Decree. Comments should be addressed to the Assistant Attorney General, Environment and Natural Resources Division, P.O. Box 7611, U.S. Department of Justice, Washington, DC 20044–7611, and should refer to *United States* v. *McCann Resources, Inc. and Mark W. McCann,* Civ., DOJ #90–5–1–1–07876. The proposed Consent Decree may be examined at the Office of the United States Attorney, Northern District of Oklahoma, 333 West 4th Street, Suite 3460, Tulsa, Oklahoma 74103–3809, and at U.S. EPA Region 6, 1445 Ross Avenue, Suite 1200, Dallas, Texas, 75202. During the public comment period, the proposed Consent Decree may be examined on the following Department of Justice Web site, to *http://www.usdoj.gov/enrd/Consent_Decrees.html.* A copy of the proposed Consent Decree may also be obtained by mail from the Consent Decree Library, P.O. Box 7611, U.S. Department of Justice, Washington, DC. 20044–7611 or by faxing or e-mailing a request to Tonia Fleetwood (*tonia.fleetwood@usdoj.gov*), fax no. (202) 514–0097, phone confirmation number (202) 514–1547. In requesting a copy from the Consent Decree Library, please enclose a check in the amount of $11.75 for the Consent Decree, or $41.50 for the Consent Decree with appendices (25 cents per page reproduction cost) payable to the U.S. Treasury.

Thomas A. Mariani, Jr.,

Assistant Chief, Environmental Enforcement Section, Environment and Natural Resources Division.

[FR Doc. 06–9673 Filed 12–13–06; 8:45 am]

BILLING CODE 4410–15–M

DEPARTMENT OF JUSTICE

Notice of Filing of Proposed Amendment to the Consent Decree Between the United States, the State of New Jersey, and PSEG Fossil LLC To Resolve Certain Alleged Violations of the Clean Air Act

Notice is hereby given that on November 30, 2006, the United States filed with the United States District Court for the District of New Jersey, in Case No. 02–CV–340, a motion for judicial approval of a proposed amendment (''Amendment'') to the consent decree entered on July 26, 2002 (the ''Consent Decree'') which resolved certain claims of the United States and New Jersey against PSEG Fossil LLC (''PSEG'') under the Prevention of Significant Deterioration and New Source Review provisions of the Clean Air Act, 42 U.S.C. 7470–7492.

The Amendment follows a request by PSEG for additional time in which to install and commence operation of the pollution control technologies specified

in the Consent Decree at Unit 2 of its Hudson plant, the largest coal-fired electricity generating unit in PSEG's New Jersey fleet. In exchange for allowing PSEG to follow a revised compliance schedule that will delay the installation of controls at this unit, the United States and New Jersey have secured commitments from PSEG to install and operate emission controls and implement emission reductions measures at this unit and at other units in the PSEG system to ensure that the Amendment's emission reductions are equivalent to, and certain aspects superior to, the original Consent Decree. the proposed amendment also requires PSEG to pay a civil penalty of $6 million for PSEG's failure to timely comply with the Consent Decree's schedule for installing and operating the emission controls at Hudson Unit 2. In addition, the Amendment requires PSEG to spend $3.25 million on environmentally beneficial projects in New Jersey. The State of New Jersey is a signatory to the Consent Decree and the proposed Amendment.

The Department of Justice will receive for a period of thirty (30) days from the date of this publication comments relating to the proposed Amendment. Comments should be addressed to the Assistant Attorney General, Environment and Natural Resources Division, P.O. Box 7611, U.S. Department of Justice, Washington, DC 20044–7611, and should refer to *United States* v. *PSEG Fossil LLC,* D.J. Ref. No. 90–5–2–1–1866/1.

The proposed Amendment, as well as a copy of the original Consent Decree cross-referenced in the Amendment, may be examined at the Office of the United States Attorney, District of New Jersey, Peter Rodino Federal Building, 970 Broad Street, 7th Floor, Newark, New Jersey 07102, and at U.S. EPA Region II, 290 Broadway, New York, New York 10007. During the public comment period, the proposed Amendment and the Consent Decree may also be examined on the following Department of Justice Web site, *http://www.usdoj.gov/enrd/Consent_Decrees.html.* In addition, a copy of the proposed Amendment and the Consent Decree may also be obtained by faxing or e-mailing a request to Tonia Fleetwood (*tonia.fleetwood@usdoj.gov*), fax no. (202) 514–0097, phone confirmation number (202) 514–1547. In requesting a copy of the Amendment from the Consent Decree Library, please enclose a check in the amount of $8 (25 cents per page reproduction cost) payable to the U.S. Treasury. In requesting a copy of the original Consent Decree from the Consent Decree Library, please enclose a check in the amount of $17.25 (25 cents per page reproduction cost) payable to the U.S. Treasury.

W. Benjamin Fisherow,

Deputy Chief, Environmental Enforcement Section, Environment and Natural Resources Division.

[FR Doc. 06–9669 Filed 12–13–06; 8:45 am]

BILLING CODE 4410–15–M

DEPARTMENT OF JUSTICE

Notice of Lodging of Consent Decree Under the Clean Air Act (''CAA'')

In accordance with 28 CFR 50.7, notice is hereby given that on November 29, 2006, a proposed Consent Decree in *United States and State of Illinois* v. *Smurfit Stone Container Enterprises, Inc.*, (''Smurfit''), Civil Action No. 06 C 6543, was lodged with the United States District Court for the Northern District of Illinois.

In a Complaint filed on the same day as the lodging of the proposed Consent Decree, the United States sought injunctive relief and civil penalties for violations of: (1) The Illinois State Implementation Plan (''SIP'') provisions governing emissions of volatile organic material from rotogravure and flexographic printing operations codified at 35 Ill. Admin. Code parts 205 and 218; (2) applicable National Emissions Standards for Hazardous Air Pollutants (''NESHAP'') for the printing and publishing industry, codified at 40 CFR Part 63, Subpart KK; (3) duty to provide information to EPA upon request pursuant to Section 114 of the CAA, 42 U.S.C. 7414; and (4) Smurfit's operating permit program requirements pursuant to Title V of the CAA, 42 U.S.C. 7661a–7661f. The violations alleged in the Complaint took place at Smurfit's printing facility located at 1128 East Tower Road, Schaumburg, Illinois (the ''Facility''). On June 30, 2006, the Facility was acquired by Bluegrass Flexible Packaging Company, LLC (''Bluegrass''). Bluegrass has also joined the Consent Decree in which Bluegrass has accepted the jurisdiction of the Court in this case.

In the proposed Consent Decree, Smurfit and Bluegrass agree, jointly and severally to: (1) Install a regenerative thermal oxidizer to destroy volatile organic material by means of high temperature thermal oxidation to meet the Illinois SIP requirements for capture and destruction of volatile organic matter; (2) comply with the cap and trade requirements of the Illinois SIP by paying the Illinois Environmental Protection Agency (EPA) $151,440.36 for Smurfit's alleged emissions in excess of its allotment trading units; (3) comply with the applicable SIP requirements regarding volatile organic material; and (4) Pay $325,000 in civil penalties—half to the United States and the other half to the State of Illinois. The Consent Decree acknowledges that Smurfit has already installed the required regenerative thermal oxidizer as required by the Consent Decree.

The Department of Justice will receive for a period of thirty (30) days from the date of this publication comments relating to the proposed Consent Decree. Comments should be addressed to the Assistant Attorney General, Environment and Natural Resources Division, P.O. Box 7611, U.S. Department of Justice, Washington, DC 20044–7611, and should refer to *United States and State of Illinois* v. *Smurfit Stone Container Enterprises, Inc.*, D.J. Ref. 90–5–2–1–08141.

The Consent Decree may be examined at the Office of the United States Attorney for the Northern District of Illinois, 219 South Dearborn Street, Chicago, Illinois 60604, and at U.S. EPA Region 5, 77 West Jackson Blvd., Chicago, IL 60604. During the public comment period the proposed Consent Decree may also be examined on the following Department of Justice Web site, *http://www.usdoj.gov/enrd/Consent_Decrees.html.* A copy of the proposed Consent Decree may also be obtained by mail from the Consent Decree Library, P.O. Box 7611, U.S. Department of Justice, Washington, DC 20044–7611 or by faxing or e-mailing a request to Tonia Fleetwood (*tonia.fleetwood@usdoj.gov*), fax no. (202) 514–0097, phone confirmation number (202) 514–1547. In requiring a copy from the Consent Decree Library, please enclose a check in the amount of $8.25 (25 cents per page reproduction cost) payable to the U.S. Treasury or, if by e-mail or fax, forward a check in that amount to the Consent Decree Library at the stated address.

William D. Brighton,

Assistant Chief, Environmental Enforcement Section, Environment and Natural Resources Division.

[FR Doc. 06–9671 Filed 12–13–06; 8:45 am]

BILLING CODE 4410–15–M

DEPARTMENT OF JUSTICE

Notice of Lodging of Consent Decree Under the Clean Air Act and the Resource Conservation and Recovery Act

Under 28 CFR 50.7, notice is hereby given that on December 1, 2006, a

proposed Consent Decree (''Consent Decree'') in the matter of *United States* v. *Von Roll America, Inc.*, Civil Action No. 4:06 CV 2893, was lodged with the United States District Court for the Northern District of Ohio, Eastern Division.

In the complaint in this matter, the United States sought injunctive relief and penalties against Von Roll America, Inc. (''Von Roll'') for claims arising under the Clean Air Act, 42 U.S.C. 7401 *et seq.*, and under the Resource Conservation and Recovery Act, 42 U.S.C. 6901 *et seq.*, in connection with the operation of Von Roll's hazardous waste treatment, storage, and disposal facility located in East Liverpool, Ohio. Under the Consent Decree, Von Roll will: control waste vapors containing volatile organic compounds, including benzene, by installing and operating a carbon absorption system that will consist of no less than two trains of a primary and a secondary carbon box operated in series; install and operate a total hydrocarbon (''THC'') continuous emissions monitor system (''CEMS'') between the primary and secondary carbon box in each dual series to monitor for carbon breakthrough (an indication that the carbon box is no longer effective); and change out the primary box whenever CEMS data shows THCs of 5 ppm or greater on a 60 minute rolling average. Von Roll will pay a civil penalty of $750,000 and, as a Supplemental Environmental Project, will undertake a household hazardous waste collection project valued at $34,000.

The Department of Justice will receive for a period of thirty (30) days from the date of this publication comments relating to the Consent Decree. Comments should be addressed to the Assistant Attorney General, Environment and Natural Resources Division, P.O. Box 7611, U.S. Department of Justice, Washington, DC 20044–7611, and should refer to *United States* v. *Von Roll America, Inc.*, D.J. Ref. No. 90–5–2–1–08743.

The Consent Decree may be examined at the Office of the United States Attorney, 2 South Main St., Rm. 208, Akron, Ohio 44308, and at U.S. EPA Region 5, 77 W. Jackson St., Chicago, IL 60604. During the public comment period, the Consent Decree may also be examined on the following Department of Justice Web site: *http://www.usdoj.gov/enrd/Consent_Decrees.html*. A copy of the Consent Decree may also be obtained by mail from the Consent Decree Library, P.O. Box 7611, U.S. Department of Justice, Washington, DC 20044–7611, or by faxing or e-mailing a request to Tonia Fleetwood (*tonia.fleetwood@usdoj.gov*), fax number (202) 514–0097, phone confirmation number (202) 514–1547. In requesting a copy from the Consent Decree Library, please enclose a check in the amount of $21.25 (25 cents per page reproduction cost) payable to the U.S. Treasury, or, if by email or fax, forward a check in the amount to the Consent Decree Library at the stated address.

William D. Brighton,

Assistant Section Chief, Environmental Enforcement Section, Environment and Natural Resources Division.

[FR Doc. 06–9670 Filed 12–13–06; 8:45 am]

BILLING CODE 4410–15–M

DEPARTMENT OF LABOR

Employment and Training Administration

[TA–W–60,269]

AAR Manufacturing dba AAR Cargo Systems, Livonia, MI; Notice of Termination of Investigation

Pursuant to Section 221 of the Trade Act of 1974, as amended, an investigation was initiated on October 20, 2006 in response to a worker petition filed by a company official on behalf of workers at AAR Manufacturing, dba Cargo Systems, Livonia, Michigan.

The petitioner has requested that the petition be withdrawn. Consequently, the investigation has been terminated.

Dated: December 4, 2006.

Elliott S. Kushner,

Certifying Officer, Division of Trade Adjustment Assistance.

[FR Doc. E6–21255 Filed 12–13–06; 8:45 am]

BILLING CODE 4510–30–P

DEPARTMENT OF LABOR

Employment and Training Administration

[TA–W–60,404]

Dickten Masch Plastics, LLC, Hattiesburg Plant, a Subsidiary of Everett Smith Group, Hattiesburg, MS; Notice of Termination of Investigation

Pursuant to Section 221 of the Trade Act of 1974, as amended, an investigation was initiated on November 13, 2006 in response to a petition filed by a company official on behalf of workers at Dickten Masch Plastics, a subsidiary of Everett Smith Group, Hattiesburg Plant, Hattiesburg, Mississippi.

The petitioner has requested that the petition be withdrawn. Consequently, the investigation has been terminated.

Dated: December 7, 2006.

Linda G. Poole,

Certifying Officer, Division of Trade Adjustment Assistance.

[FR Doc. E6–21256 Filed 12–13–06; 8:45 am]

BILLING CODE 4510–30–P

DEPARTMENT OF LABOR

Employment and Training Administration

[TA–W–60,266]

Hanesbrands, Inc., Formerly Known as Sara Lee Corporation, Trading as L'eggs Products Marion Plant, Marion, SC; Amended Certification Regarding Eligibility To Apply for Worker Adjustment Assistance and Alternative Trade Adjustment Assistance

In accordance with Section 223 of the Trade Act of 1974 (19 U.S.C. 2273), and Section 246 of the Trade Act of 1974 (26 U.S.C. 2813), as amended, the Department of Labor issued a Certification of Eligibility to Apply for Worker Adjustment Assistance and Alternative Trade Adjustment Assistance on November 7, 2006, applicable to workers of Hanesbrands, Inc., Marion, South Carolina. The notice was published in the **Federal Register** on November 28, 2006 (71 FR 68844).

At the request of the State agency, the Department reviewed the certification for workers of the subject firm. The workers are engaged in activities related to the production of hosiery. The Department inadvertently omitted in this certification that the firm was formerly known as Sara Lee Branded Apparel. Specifically, the State reports that the workers wages were reported under the Federal Employment Identification Number (FEIN) for Sara Lee Corporation, Trading As L'eggs Products Marion Plant.

Accordingly, the Department is amending the certification to include workers whose wages were reported under the FEIN for Sara Lee.

The amended notice applicable to TA–W–60,266 is hereby issued as follows:

All workers of Hanesbrands, Inc., formerly known as Sara Lee Corporation, Trading as L'eggs Products Marion Plant, Marion, South Carolina, who became totally or partially separated from employment on or after October 13, 2005 through November 7, 2008, are eligible to apply for adjustment assistance under Section 223 of the Trade Act of 1974, and are also eligible to apply for alternative

trade adjustment assistance under Section 246 of the Trade Act of 1974.

Signed at Washington, DC this 1st day of December, 2006.

Linda G. Poole,

Certifying Officer, Division of Trade Adjustment Assistance.

[FR Doc. E6–21254 Filed 12–13–06; 8:45 am]

BILLING CODE 4510–30–P

DEPARTMENT OF LABOR

Employment and Training Administration

[TA–W–57,446]

Hercules Incorporation, Aqualon Division, Parlin, NJ; Notice of Termination of Investigation

On August 23, 2006, the U.S. Court of International Trade (USCIT) granted the Department of Labor's consent motion for voluntary remand in *Former Employees of Hercules Incorporation* v. *United States*, Court No. 05–00602.

On June 24, 2005, a duly authorized representative for the State of New Jersey filed a petition for Trade Adjustment Assistance (TAA) and Alternative Trade Adjustment Assistance (ATAA) on behalf of workers and former workers of Hercules, Parlin, New Jersey (subject facility) producing nitrocellulose (subject worker group). AR 1.

Following an investigation, the Department of Labor (Department) issued a negative determination regarding the subject worker group's eligibility to apply for TAA and ATAA on July 20, 2005. AR 24. The Department's Notice of determination was published in the **Federal Register** on August 26, 2005 (70 FR 50411). AR 31.

During the investigation, the Department found that the subject facility produces not nitrocellulose but natrosol and that Hercules, Inc. (subject firm) did not separate or threaten to separate a significant number or proportion of workers as required by the Trade Act of 1974. AR 24.

In a letter dated August 11, 2005, a representative of the International Union of Operating Engineers, Local 68, (Union) requested administrative reconsideration by the Department. The Union stated that they represent ''7 Power plant employees'' and alleged that the ''Power House'' workers produce steam used in the production of natrosol and nitrocellulose. The Union inferred that the subject workers are eligible to apply for TAA as workers of a secondarily-affected company, asserting that the Power House supplied a component part to Green Tree Chemical Technologies (Green Tree), which was TAA-certified on January 16, 2004 (TA–W–53,831), and that the workers' separations occurred because ''Green Tree ceased production of Nitrocellulose in November of 2003.'' The Union also stated that ''if it wasn't for the Nitrocellulose business going out of business, the larger power house would have been left and employees would all stay working.'' The subject firm's new power house ''would only require 5 of the 12 people already employed.'' AR 32, 33.

The Department issued a Notice of Affirmative Determination Regarding Application for Reconsideration on August 19, 2005. AR 36. The Department's Notice was published in the **Federal Register** on September 1, 2005 (70 FR 52131). AR 44.

Following the reconsideration investigation, the Department issued a Notice of Negative Determination on Reconsideration on September 13, 2005. AR 42. The Department's Notice of Determination on Reconsideration was published in the **Federal Register** on September 28, 2005 (70 FR 56741). SAR 1. In the reconsideration investigation, the Department found that steam produced by the Power House was used in the production of natrosol and sold to a TAA-certified company. The Department also found that the sale of steam to the TAA-certified company ceased in 2003, prior to the relevant period. As such, the subject workers were not certified for TAA. AR 42.

In a letter dated November 1, 2005 to the USCIT, the Union requested judicial review, stating that ''all Hercules employees prior to 6/2000 and all of Green Tree employees which lost there (sic) jobs had gotten the TAA benefits.'' SAR 2. In response to the complaint, the Department filed an administrative record.

In a July 27, 2006 letter to U.S. Department of Justice (Justice) counsel, Plaintiff's counsel provided Justice with a copy of an order of the Superior Court of New Jersey, Middlesex County, filed November 21, 2003. SAR 5–12. Plaintiff's counsel asserts that the Department's conclusions are inconsistent with facts reflected in the AR and the Superior Court of New Jersey order, and that the Department's secondarily-affected analysis was inappropriate. SAR 6.

Because the Department was previously unaware of the Superior Court of New Jersey order and is obligated to issue its determinations based on a thorough analysis for all available and facts, the Department requested voluntary remand.

Nitrocellulose is a highly-flammable chemical compound powder that is formed from nitric acid and cellulose. Common uses for nitrocellulose are gunpowder and magician's ''flash paper'' (sheets of paper than burn almost instantly with a bright flash and leave no ash). Because of its applications, it is also commonly known as guncotton. Unless the nitrocellulose is wet, it will self-explode. SAR 26–32.

Due to the volatile nature of the chemical compound, steam is an important part of the nitrocellulose production process. Steam is used to keep nitrocellulose wet, thus stable. Steam is not a component part of nitrocellulose but is used in the production process. For example, heat is used to bake cookies but is not a component part of the cookie, and the workers who create the heat are considered to be engaged in the production of cookies. Likewise, steam is used to produce nitrocellulose but is not considered a component part of nitrocellulose, and the workers who create steam are considered to be engaged in the production of nitrocellulose. Steam is generated from a power house.

For purposes of the Trade Act, the relevant period is from one year prior to the petition date (June 24, 2005) through the date the initial determination was issued (July 20, 2005). Therefore, the relevant period is June 24, 2004 through July 20, 2005. While events and facts that fall outside the relevant period may not be used as a basis for TAA certification, they may be used to provide context for the remand investigation.

During the remand investigation, the Department spoke to the former owner of Green Tree, SAR 33, and Hercules company officials. SAR 14, 34, 35. The purposes of the conversations are to gather information in order to determine the subject workers' eligibility to apply for TAA and to reconcile factual discrepancies.

According to the former owner of Green Tree, Green Tree purchased from Hercules the nitrocellulose line at the Parlin, New Jersey location. Under the agreement, Green Tree would rent the land from Hercules and purchase the buildings (including the Power House), machines, and equipment from Hercules. The former owner also stated that that nitrocellulose production ceased at Green Tree in November 2003 but some workers stayed on-site during the plant closure (including cleaning, fire safety, and power house staff). The company official also explained that that steam was produced throughout the shut-down process because it was

needed to keep the nitrocellulose stable. SAR 33.

The Hercules counsel confirmed the facts surrounding the Superior Court of New Jersey, November 21, 2003, order, SAR 14, and provided the Department with a copy of a Superior Court of New Jersey, July 2, 2004, order. SAR 19. A brief history of the subject facility follows.

In June 2000, Hercules leased a parcel of land to Green Tree and sold the nitrocellulose production line, which sat on the parcel of leased land, to Green Tree. Under the agreement, Green Tree would take ownership of the Power House, which also sat on the leased land, and supply Hercules with steam for Hercules' natrosol production, which sat on a lot adjacent to the leased parcel of land. SAR 14.

In 2003, when Green Tree went out of business, Hercules was granted permission by the Superior Court of New Jersey to operate the subject facility as part of an effort to properly close it down. Such measures were required since Green Tree was unable to shut down the facility in a manner that was in compliance with New Jersey regulations. SAR 16–21.

Once Hercules obtained permission by the Superior Court of New Jersey to do so, it began the first phase of the shut down: removing the hazardous materials off-site, per New Jersey regulations. This process began in November 2003 and was completed on July 14, 2005. During that process, steam was required to keep the nitrocellulose stable, and the Power House was in operation to generate the required steam. When the hazardous material removal process was completed, Hercules terminated nonessential Green Tree employees, per the Superior Court of New Jersey orders. SAR 34.

Hercules is currently in the second phase of the shut down: demolishing the buildings and disposing of the debris. There is no projected completion date for this phase since disposal of the debris is a dangerous and tedious process. Because of its nature, nitrocellulose permeates the buildings and equipment. Each piece of material and equipment must be wiped clean of nitrocellulose particles and the nitrocellulose disposed of, per New Jersey regulations. SAR 34.

When asked about the Green Tree Power House, the Hercules' counsel stated that Hercules' decision to construct a modern and efficient power house of its own was made prior to Green Tree's bankruptcy in 2003 and was based on the advanced age and poor condition of the Green Tree Power House. SAR 14. Construction of Hercules' power house began in April 2005 and was completed in July 2005. SAR 35. After a trial run, the Hercules power house was deemed fully operational in August 2005. SAR 34, 35. When the Hercules power House began producing steam for its natrosol production, the Green Tree Power House was permanently shut down. SAR 34, 35. Because the Hercules power house is smaller and more efficient than the Green Tree Power House, only five of the twelve Green Tree Power House workers were offered employment with Hercules. SAR 34.

There are two allegations in the Plaintiff's complaint: 1) the subject workers are Hercules employees (''In July of 2004 Hercules made the Power House employees Hercules employees'') and 2) increased imports of nitrocellulose caused the workers' separations (''if Nitrocellulose business didn't deteriorate over the years due to foreign competition repairs would have been made to the older powerhouse, and both the nitrocellulose plant and the powerhouse would still be running.'') SAR 2.

The first issue is whether the subject workers are Green Tree employees or Hercules employees.

The Plaintiff stated in the complaint that ''In July of 2004 Hercules made the Power House employees Hercules employees.'' SAR 2. Plaintiff's counsel's letter suggests that the subject workers are Hercules employees (''Thus, from November 21, 2003 until the time at which it was shut down, the power house in question was still being operated in the name of and authority of Green Tree and not Hercules. The administrative record does not appear to provide any indication of when (if ever) the power house thereafter was operated by Hercules acting as Hercules.'') SAR 6.

According to a Hercules company official located on-site, the steam requirement for natrosol is one-third of the steam requirement of nitrocellulose. SAR 35. Therefore, when nitrocellulose removal was completed on July 14, 2005, steam production and employment levels at the Green Tree Power House was reduced accordingly. After those separations occurred, the remaining Green Tree workers continued to operate the Power House until the Hercules power house was able to produce its own steam in August 2005. When the Green Tree Power House was permanently shut down in August 2005, the remaining Power House workers were separated from employment with Green Tree and offered positions with Hercules to operate the Hercules power house. SAR 34, 35.

Hercules' decision to operate the Green Tree Power House after the conclusion of the nitrocellulose removal as cannot be construed as a constructive conversion of Green Tree employees into Hercules employees. The July 2, 2004 Superior Court of New Jersey order stated that ''this authorization shall not relieve Green Tree of any obligations it may have, including that under any permit.'' SAR 19. The June 2000 agreement between Hercules and Green Tree obligated Green Tree to provide Hercules steam for its natrosol production. SAR 14, 34.

Because Green Tree's legal obligation to provide steam to Hercules was not voided, SAR 16, 20, the operation of the Green Tree Power House to supply steam for Hercules' natrosol production is not ''Hercules acting as Hercules,'' SAR 6, but Hercules acting in Green Tree's name to maintain the operations of the Power House, as provided by the Superior Court of New Jersey July 2, 2004 order. SAR 19.

The July 2, 2004 order reinforces the ''Green Tree-as-principle/Hercules-as-agent'' relationship and identifies the workers at the Power Plant as Green Tree employees. As such, the Department determines that the subject workers are not employees of Hercules, Inc., Parlin, New Jersey but employees of Green Tree Chemical Technologies, Parlin, New Jersey.

Because the Department has determined that the subject workers are in fact employees of Green Tree engaged in the production of nitrcellolose, the subject workers are covered by a TAA/ATAA certification which was in effect at the time of the petition (Green Tree Chemical Technologies, Parlin, New Jersey; TA–W–53,831; issued January 16, 2004; expired January 16, 2006).

The second issue is whether increased imports of nitrocellulose caused the workers' separations. Because the workers are certified under Green Tree Chemical Technologies, Parlin, New Jersey (TA–W–53,831), it is apparent that the answer is in the affirmative.

Since the subject workers are covered by TA–W–53,831, further investigation in this case would serve no purpose and the investigation has been terminated.

Recognizing that there has been a significant delay between the workers' separations and their notification of certification under TA–W–53,831, the Department is providing guidance to the appropriate State agencies to enable the subject workers to apply for worker adjustment assistance.

Conclusion

After careful review of the findings of the remand investigation, I am terminating the investigation of the petition for worker adjustment assistance filed on behalf of workers and former workers of Hercules Incorporation, Aqualon Division, Parlin, New Jersey.

Signed at Washington, DC this 6th day of December 2006.

Elliott S. Kushner,

Certifying Officer, Division of Trade Adjustment Assistance.

[FR Doc. E6–21252 Filed 12–13–06; 8:45 am]

BILLING CODE 4510–30–P

DEPARTMENT OF LABOR

Employment and Training Administration

[TA–W–60,442]

Northern Hardwoods, South Range, MI; Notice of Termination of Investigation

Pursuant to Section 221 of the Trade Act of 1974, as amended, an investigation was initiated on November 15, 2006 in response to a petition filed by a company official on behalf of Jennifer Niemela of Northern Hardwoods, South Ridge, Michigan.

The company official explained that the worker is engaged in stamping wood components within the Dimension Plant of Northern Hardwoods, a subsidiary of Hardwood Lumber Manufacturing Incorporated, South Ridge, Michigan. All workers of the Dimension Plant are covered by a certification of eligibility to apply for worker adjustment assistance and alternative trade adjustment assistance under petition number TA–W–57,091, that does not expire until June 8, 2007.

Consequently, further investigation in this case would serve no purpose and the investigation under this petition has been terminated.

Signed at Washington, DC, this 7th day of December 2006.

Linda G. Poole,

Certifying Officer, Division of Trade Adjustment Assistance.

[FR Doc. E6–21257 Filed 12–13–06; 8:45 am]

BILLING CODE 4510–30–P

DEPARTMENT OF LABOR

Employment and Training Administration

[TA–W–60,460]

Roseburg Forest Products, Coquille, OR; Notice of Termination of Investigation

Pursuant to Section 221 of the Trade Act of 1974, as amended, an investigation was initiated on November 20, 2006 in response to a petition filed jointly by the Carpenters and Joiners of America Local 2784 and a company official on behalf of workers of Roseburg Forest Products, Coquille, Oregon.

The petitioners have requested that the petition be withdrawn. Consequently, the investigation has been terminated.

December 5, 2006.

Linda G. Poole,

Certifying Officer, Division of Trade Adjustment Assistance.

[FR Doc. E6–21258 Filed 12–13–06; 8:45 am]

BILLING CODE 4510–30–P

DEPARTMENT OF LABOR

Employment and Training Administration

[TA–W–60,161]

Wright and Lato, Inc., East Orange, NJ; Notice of Termination of Investigation

Pursuant to Section 221 of the Trade Act of 1974, as amended, an investigation was initiated on September 28, 2006 in response to a petition filed by a Company Official on behalf of workers at Wright and Lato, Inc., East Orange, New Jersey.

The petitioner has requested that the petition be withdrawn. Consequently, the investigation has been terminated.

Dated: December 5, 2006.

Elliott S. Kushner,

Certifying Officer, Division of Trade Adjustment Assistance.

[FR Doc. E6–21253 Filed 12–13–06; 8:45 am]

BILLING CODE 4510–30–P

LEGAL SERVICES CORPORATION

Sunshine Act Meeting of the Board of Directors

TIME AND DATE: The Board of Directors of the Legal Services Corporation will meet on December 18, 2006 via conference call. The meeting will begin at 2 p.m., and continue until conclusion of the Board's agenda.

LOCATION: 3333 K Street, NW., Washington, DC 20007, 3rd Floor Conference Room.

STATUS OF MEETING: Open. Directors will participate by telephone conference in such a manner as to enable interested members of the public to hear and identify all persons participating in the meeting. Members of the public wishing to observe the meeting may do so by joining participating staff at the location indicated above. Members of the public wishing to listen to the meeting by telephone may obtain call-in information by calling LSC's FOIA Information line at (202) 295–1629.

MATTERS TO BE CONSIDERED:

1. Approval of the agenda.
2. Consider and act on delegation to the Chairman of the Board authority to negotiate a two-year extension of Helaine M. Barnett's term of employment as President of the Legal Services Corporation.
3. Consider and act on other business.
4. Public comment.

CONTACT PERSON FOR INFORMATION: Patricia Batie, Manager of Board Operations, at (202) 295–1500.

Special Needs: Upon request, meeting notices will be made available in alternate formats to accommodate visual and hearing impairments. Individuals who have a disability and need an accommodation to attend the meeting may notify Patricia Batie at (202) 295–1500.

Dated: December 11, 2006.

Victor M. Fortuno,

Vice President for Legal Affairs, General Counsel & Corporate Secretary.

[FR Doc. 06–9714 Filed 12–11–06; 4:09 pm]

BILLING CODE 7050–01–P

MERIT SYSTEMS PROTECTION BOARD

Agency Information Collection Activities; Proposed Collection

AGENCY: Merit Systems Protection Board.

ACTION: Notice.

SUMMARY: In compliance with the Paperwork Reduction Act (44 U.S.C. 3501 et seq.), this notice announces that the Merit Systems Protection Board (MSPB or the Board) is forwarding the following proposed information collection to the Office of Management and Budget (OMB) for approval: MSPB Form 185, a revised paper Appeal Form; and e-Appeal, an electronic application for filing an appeal with the Board.

DATES: Please submit comments on or before January 26, 2007.

ADDRESSES: Comments concerning the paperwork burden should be addressed to the office of Information and Regulatory Affairs, Office of Management and Budget, Attention: Desk Officer for MSPB, 725 17th Street, NW., Washington, DC 20503, with a copy to Timothy Korb, Merit Systems Protection Board, 1615 M Street, NW., Washington, DC 20419 (or by e-mail to *Timothy.Korb@mspb.gov*).

SUPPLEMENTARY INFORMATION: On September 21, 2006, the Board published in the **Federal Register** (71 FR 55221) a notice of its intent to submit this proposed information request to OMB for approval, noting that the MSPB intends to make one substantive change to the information collected on the MSPB Appeal Form in both its paper and electronic formats: Individuals who file appeals with the MSPB will be required to provide the last four digits of their Social Security numbers. In addition, several minor edits are being made to the Appeal Form to make the process easier to understand.

The reason for requiring the last four digits of appellants' Social Security numbers is to ascertain whether an appellant has filed previous appeals with the MSPB that may affect the processing of the new appeal. Because of the similarity of names and the possibility of name changes, and because appellants sometimes use nicknames instead of formal names, it can be difficult to determine whether the person who has filed a new appeal is the same person who filed one or more previous Board appeals. Although requiring the last four digits of the appellant's Social Security number will not result in certainty as to the filer's identity, it will give the MSPB more assurance in this regard. The Board stated that it will carefully safeguard the last four digits of Social Security numbers provided by appellants in MSPB proceedings, and that this information would not generally be disclosed to third parties.

The Board received one comment regarding the substantive change to the appeal form, which raised a concern about protecting the privacy of appellants: ''The last four digits of the SSN, in combination with any other amount of personal information about the appellant, the complete SSN can be determined.'' We appreciate and share the concern about protecting appellants' privacy, but our investigation failed to disclose a method for accurately determining a person's complete Social Security number having only knowledge of the last four digits (plus some other personal information). More importantly, as stated in our earlier **Federal Register** notice, the MSPB will not be disclosing these four-digit numbers to persons outside the agency. These numbers, along with other personal identifiable information, would be redacted before releasing copies of Board records to persons making requests under the Freedom of Information Act or the Privacy Act.

Estimated Reporting Burden: As stated in 60-day notice, the public reporting burden for this collection of information is estimated to vary from 20 minutes to 4 hours, with an average of 60 minutes per response, including time for reviewing the form and instructions, searching existing data sources, gathering the data necessary, and completing and reviewing the collection of information.

ESTIMATED ANNUAL REPORTING BURDEN

5 CFR parts	Annual number of respondents	Frequency per response	Total annual reponse	Hours per response	Total hours
1201, 1208, and 1209	7,150	1	7,150	1.0	7,150

Bentley M. Roberts, Jr.,
Clerk of the Board.
[FR Doc. 06–9681 Filed 12–13–06; 8:45 am]
BILLING CODE 7401–01–M

NATIONAL ARCHIVES AND RECORDS ADMINISTRATION

Agency Information Collection Activities: Submission for OMB Review; Comment Request

AGENCY: National Archives and Records Administration (NARA).

ACTION: Notice.

SUMMARY: NARA is giving public notice that the agency has submitted to OMB for approval the information collection described in this notice. The public is invited to comment on the proposed information collection pursuant to the Paperwork Reduction Act of 1995.

DATES: Written comments must be submitted to OMB at the address below on or before January 16, 2007 to be assured of consideration.

ADDRESSES: Send comments to Desk Officer for NARA, Office of Management and Budget, New Executive Office Building, Washington, DC 20503; fax: 202–395–5167.

FOR FURTHER INFORMATION CONTACT: Requests for additional information or copies of the proposed information collection and supporting statement should be directed to Tamee Fechhelm at telephone number 301–837–1694 or fax number 301–713–7409.

SUPPLEMENTARY INFORMATION: Pursuant to the Paperwork Reduction Act of 1995 (Pub. L. 104–13), NARA invites the general public and other Federal agencies to comment on proposed information collections. NARA published a notice of proposed collection for this information collection on September 21, 2006 (71 FR 55222 and 55223). No comments were received. NARA has submitted the described information collection to OMB for approval.

In response to this notice, comments and suggestions should address one or more of the following points: (a) Whether the proposed information collection is necessary for the proper performance of the functions of NARA; (b) the accuracy of NARA's estimate of the burden of the proposed information collection; (c) ways to enhance the quality, utility, and clarity of the information to be collected; and (d) ways to minimize the burden of the collection of information on respondents, including the use of information technology; and (e) whether small businesses are affected by this collection. In this notice, NARA is soliciting comments concerning the following information collection:

Title: Forms Relating to Civilian Service Records.

OMB number: 3095–0037.

Agency form number: NA Forms 13022, 13064, 13068.

Type of review: Regular.

Affected public: Former Federal civilian employees, their authorized representatives, State and local governments, and businesses.

Estimated number of respondents: 32,060.

Estimated time per response: 5 minutes.

Frequency of response: On occasion, when individuals desire to acquire

information from civilian personnel or medical records.

Estimated total annual burden hours: 2,671 hours.

Abstract: In accordance with rules issued by the Office of Personnel Management, the National Personnel Records Center (NPRC) of the National Archives and Records Administration (NARA) administers Official Personnel Folders (OPF) and Employee Medical Folders (EMF) of former Federal civilian employees. The authority for this information collection is contained in 36 CFR 1228.164. When former Federal civilian employees and other authorized individuals request information from or copies of documents in OPF's or EMF's, they must provide in forms or in letters certain information about the employee and the nature of the request. The NA Form 13022, Returned Request Form, is used to request additional information about the former Federal employee. The NA Form 13064, Reply to Request Involving Relief Agencies, is used to request additional information about the former relief agency employee. The NA Form 13068, Walk-In Request for OPM Records or Information, is used by members of the public, with proper authorization, to request a copy of a Personnel or Medical record.

Dated: December 7, 2006.

Martha Morphy,

Assistant Archivist for Information Services.

[FR Doc. E6–21312 Filed 12–13–06; 8:45 am]

BILLING CODE 7515–01–P

NATIONAL FOUNDATION ON THE ARTS AND HUMANITIES

Notification and Federal Employee Antidiscrimination and Retaliation Act of 2002

AGENCY: National Endowment for the Arts.

ACTION: Notice.

SUMMARY: Notice is hereby given to National Endowment for the Arts employees, former employees and applicants for Federal employment about the rights and remedies available under the antidiscrimination, whistleblower protection, and retaliation laws applicable to them.

DATES: Effective immediately.

FOR FURTHER INFORMATION CONTACT: Craig McCord, Director of Human Resources, National Endowment for the Arts, 1100 Pennsylvania Avenue, NW., Room 627, Washington, DC 20506, (202) 682–5473; or Angelia C. Richardson, Director, Civil Rights Office, National Endowment for the Arts, 1100 Pennsylvania Avenue, NW., Room 219, Washington, DC 20506, (202) 682–5454.

Persons who cannot access this No FEAR Act Notice through the Internet may request a paper or electronic copy by contacting the Civil Rights Office at the address and telephone number listed above.

SUPPLEMENTARY INFORMATION: On May 15, 2002, Congress enacted the ''Notification and Federal Employee Antidiscrimination and Retaliation Act of 2002,'' which is now known as the No FEAR Act. One purpose of the Act is to require that Federal agencies be accountable for violations of antidiscrimination and whistleblower protection laws. In support of this purpose, Congress found that ''agencies cannot be run effectively if Federal agencies practice or tolerate discrimination.'' Public Law 107–174, Section 101(1), 1216 Stat. 566. The Act also requires the National Endowment for the Arts to provide this notice to Federal employees, former Federal employees and applicants for Federal employment to inform them of the rights and protections available to them under Federal antidiscrimination, whistleblower protection, and retaliation laws.

Antidiscrimination Laws

A Federal agency cannot discriminate against an employee or applicant with respect to the terms, conditions or privileges of employment on the basis of race, color, religion, sex, national origin, age, disability, marital status, or political affiliation. Discrimination on these bases is prohibited by one or more of the following statutes: 5 U.S.C. 2302(b)(1), 29 U.S.C. 206(d), 29 U.S.C. 631, 29 U.S.C. 633a, 29 U.S.C. 791, and 42 U.S.C. 2000e–16. If you believe that you have been the victim of unlawful discrimination on the basis of race, color, religion, sex, national origin or disability, you must contact the Equal Employment Opportunity (EEO) counselor within 45 calendar days of the alleged discriminatory action, or, in the case of a personnel action, within 45 calendar days of the effective date of the action, before you can file a formal complaint of discrimination with our agency. See, e.g. 29 CFR part 1614. If you believe that you have been the victim of unlawful discrimination on the basis of age, you must either contact an EEO counselor as noted above or give notice of intent to sue to the Equal Employment Opportunity Commission (EEOC) within 180 calendar days of the alleged discriminatory action. If you are alleging discrimination based on marital status or political affiliation, you may file a written complaint with the U.S. Office of Special Counsel (OSC) (contact information listed under whistleblower Protection Laws). In the alternative (or in some cases, in addition), you may pursue a discrimination complaint by filing a grievance through your agency's administrative or negotiated grievance procedures, if such procedures apply and are available.

Whistleblower Protection Laws

A Federal employee with authority to take, direct others to take, recommend or approve any personnel action must not use that authority to take or fail to take, or threaten to take or fail to take, a personnel action against an employee or applicant because of disclosure of information by that individual that is reasonably believed to evidence violations of law, rule or regulations; gross mismanagement; gross waste of funds; an abuse of authority; or a substantial and specific danger to public health or safety, unless disclosure of such information is specifically prohibited by law and such information is specifically required by Executive order to be kept secret in the interest of national defense or the conduct of foreign affairs. Retaliation against an employee or applicant for making a protected disclosure is prohibited by 5 U.S.C. 2302(b)(8). If you believe that you have been the victim of whistleblower retaliation, you may file a written complaint (Form OSC–11) with the U.S. Office of Special Counsel at 1730 M Street, NW., Suite 218, Washington, DC 20036–4505 or online through the OSC Web site—*http://www.osc.gov*.

Retaliation for Engaging in Protected Activity

A Federal agency cannot retaliate against an employee or applicant because that individual exercises his or her rights under any of the Federal antidiscrimination or whistleblower protection laws listed above. If you believe that you are the victim of retaliation for engaging in protected activity, you must follow, as appropriate, the procedures described in the Antidiscrimination Laws and Whistleblower Protection Laws sections or, if applicable, the administrative or negotiated grievance procedures in order to pursue any legal remedy.

Disciplinary Actions

Under the existing laws, each agency retains the right, where appropriate, to discipline a Federal employee for conduct that is inconsistent with Federal Antidiscrimination and Whistleblower Protection Laws up to and including removal. If OSC has

initiated an investigation under 5 U.S.C. 1214, however, according to 5 U.S.C. 1214(f), agencies must seek approval from the Special Counsel to discipline employees for, among other activities, engaging in prohibited retaliation. Nothing in the No FEAR Act alters existing laws or permits an agency to take unfounded disciplinary action against a Federal employee or to violate the procedural rights of a Federal employee who has been accused of discrimination.

Additional Information

For further information regarding the No FEAR Act regulations, refer to 5 CFR part 724, as well as the appropriate offices within your agency (e.g., Civil Rights/EEO Office, Human Resources Office, or Office of General Counsel). Additional information regarding Federal antidiscrimination, whistleblower protection, and retaliation laws can be found at the EEOC Web site—*http://www.eeoc.gov*—and the OSC Web site—*http://www.osc.gov*.

Existing Rights Unchanged

Pursuant to Section 205 of the No FEAR Act, neither the Act nor this notice creates, expands or reduces any rights otherwise available to any employee, former employee or applicant under the laws of the United States, including the provisions of law specified in 5 U.S.C. 2302(d).

Karen Elias,

Acting General Counsel, National Endowment for the Arts.

[FR Doc. 06–9689 Filed 12–13–06; 8:45 am]

BILLING CODE 7036–01–M

NUCLEAR REGULATORY COMMISSION

Agency Information Collection Activities: Submission for the Office of Management and Budget (OMB) Review; Comment Request

AGENCY: U.S. Nuclear Regulatory Commission (NRC).

ACTION: Notice of the OMB review of information collection and solicitation of public comment.

SUMMARY: The NRC has recently submitted to OMB for review the following proposal for the collection of information under the provisions of the Paperwork Reduction Act of 1995 (44 U.S.C. Chapter 35). The NRC hereby informs potential respondents that an agency may not conduct or sponsor, and that a person is not required to respond to, a collection of information unless it displays a current valid OMB control number.

1. *Type of submission, new, revision, or extension:* Revision.

2. *The title of the information collection:* NRC Form 664, ''General Licensee Registration''.

3. *The form number if applicable:* NRC Form 664.

4. *How often the collection is required:* Annually.

5. *Who is required or asked to report:* General Licensees of the NRC who possess devices subject to registration under 10 CFR 31.5.

6. *An estimate of the number of responses:* 1,000.

7. *The estimated number of annual respondents:* 1,000.

8. *The number of hours needed annually to complete the requirement or request:* 333 hours annually (1,000 respondents × 20 minutes per form).

9. *An indication of whether Section 3507(d), Pub. L. 104–13 applies:* Not applicable.

10. *Abstract:* NRC Form 664 is used by NRC general licensees to make reports regarding certain generally licensed devices subject to registration. The registration program allows NRC to better track general licensees, so that they can be contacted or inspected as necessary, and to make sure that generally licensed devices can be identified even if lost or damaged, and to further ensure that general licensees are aware of and understand the requirements for the possession of devices containing byproducts material. Greater awareness helps to ensure that general licensees will comply with the requirements for proper handling and disposal of generally licensed devices and would reduce the potential for incidents that could result in unnecessary radiation exposure to the public and contamination of property.

A copy of the final supporting statement may be viewed free of charge at the NRC Public Document Room, One White Flint North, 11555 Rockville Pike, Room O–1 F21, Rockville, MD 20852. OMB clearance requests are available at the NRC worldwide Web site: *http://www.nrc.gov/public-involve/doc-comment/omb/index.html.* The document will be available on the NRC home page site for 60 days after the signature date of this notice.

Comments and questions should be directed to the OMB reviewer listed below by January 16, 2007. Comments received after this date will be considered if it is practical to do so, but assurance of consideration cannot be given to comments received after this date. OMB Desk Officer, Office of Information and Regulatory Affairs (3150–0198), NEOB–10202, Office of Management and Budget, Washington, DC 20503.

Comments can also be submitted by telephone at (202) 395–3087.

The NRC Clearance Officer is Margaret A. Janney, 301–415–7245.

Dated at Rockville, Maryland, this 7th day of December, 2006.

For the Nuclear Regulatory Commission.

Margaret A. Janney,

NRC Clearance Officer, Office of the Chief Information Officer.

[FR Doc. E6–21271 Filed 12–13–06; 8:45 am]

BILLING CODE 7590–01–P

NUCLEAR REGULATORY COMMISSION

[Docket No. 50–293]

Entergy Nuclear Operations, Inc., Pilgrim Nuclear Power Station; Notice of Availability of The Draft Supplement 29 to the Generic Environmental Impact Statement for License Renewal of Nuclear Plants, and Public Meeting for the License Renewal of Pilgrim Nuclear Power Station

Notice is hereby given that the U.S. Nuclear Regulatory Commission (NRC, Commission) has published a draft plant-specific supplement to the Generic Environmental Impact Statement for License Renewal of Nuclear Plants (GEIS), NUREG–1437, regarding the renewal of operating license DPR–35 for an additional 20 years of operation for the Pilgrim Nuclear Power Station (Pilgrim). Pilgrim is located on the western shore of Cape Cod in the Town of Plymouth, Plymouth County, Massachusetts. It is 38 miles southeast of Boston, Massachusetts, and 44 miles east of Providence, Rhode Island. Possible alternatives to the proposed action (license renewal) include no action and reasonable alternative energy sources.

The draft Supplement 29 to the GEIS is publicly available at the NRC Public Document Room (PDR), located at One White Flint North, 11555 Rockville Pike, Rockville, Maryland, 20852, or from the NRC's Agencywide Documents Access and Management System (ADAMS). The ADAMS Public Electronic Reading Room is accessible at *http://adamswebsearch.nrc.gov/dologin.htm*. The Accession Number for the draft Supplement 29 to the GEIS is ML063260173. Persons who do not have access to ADAMS, or who encounter problems in accessing the documents located in ADAMS, should contact the NRC's PDR reference staff by telephone at 1–800–397–4209, or 301–415–4737,

or by e-mail at *pdr@nrc.gov*. In addition, the Plymouth Public Library, 132 South Street; Duxbury Free Library, 77 Alden Street; and the Kingston Public Library, 6 Green Street, has agreed to make the draft supplement to the GEIS available for public inspection.

Any interested party may submit comments on the draft supplement to the GEIS for consideration by the NRC staff. To be certain of consideration, comments on the draft supplement to the GEIS and the proposed action must be received by February 28, 2007.

Comments received after the due date will be considered if it is practical to do so, but the NRC staff is able to assure consideration only for comments received on or before this date. Written comments on the draft supplement to the GEIS should be sent to: Chief, Rules and Directives Branch, Division of Administrative Services, Office of Administration, Mail Stop T–6D59, U.S. Nuclear Regulatory Commission, Washington, DC 20555–0001.

Comments may be hand-delivered to the NRC at 11545 Rockville Pike, Room T–6D59, Rockville, Maryland, between 7:30 a.m. and 4:15 p.m. on Federal workdays. Electronic comments may be submitted to the NRC by e-mail at *PilgrimEIS@nrc.gov*. All comments received by the Commission, including those made by Federal, State, local agencies, Native American Tribes, or other interested persons, will be made available electronically at the Commission's PDR in Rockville, Maryland, and through ADAMS.

The NRC staff will hold a public meeting to present an overview of the draft plant-specific supplement to the GEIS and to accept public comments on the document. The public meeting will be held on January 24, 2007, at the Radisson Plymouth Harbor Ballroom, 180 Water Street, Plymouth, Massachusetts 02360. There will be two sessions to accommodate interested parties. The first session will convene at 1:30 p.m. and will continue until 4:30 p.m., as necessary. The second session will convene at 7 p.m. with a repeat of the overview portions of the meeting and will continue until 10 p.m., as necessary. Both meetings will be transcribed and will include: (1) A presentation of the contents of the draft plant-specific supplement to the GEIS, and (2) the opportunity for interested government agencies, organizations, and individuals to provide comments on the draft report. Additionally, the NRC staff will host informal discussions one hour prior to the start of each session at the same location. No comments on the draft supplement to the GEIS will be accepted during the informal discussions. To be considered, comments must be provided either at the transcribed public meeting or in writing. Persons may pre-register to attend or present oral comments at the meeting by contacting Ms. Alicia Williamson, the NRC Environmental Project Manager at 1–800–368–5642, extension 1878, or by e-mail at *PilgrimEIS@nrc.gov*, no later than January 17, 2007. Members of the public may also register to provide oral comments within 15 minutes of the start of each session. Individual, oral comments may be limited by the time available, depending on the number of persons who register. If special equipment or accommodations are needed to attend or present information at the public meeting, the need should be brought to Ms. Alicia Williamson attention no later than January 10, 2007, to provide the NRC staff adequate notice to determine whether the request can be accommodated.

For Further Information Contact: Ms. Alicia Williamson, Environmental Branch B, Division of License Renewal, Office of Nuclear Reactor Regulation, U.S. Nuclear Regulatory Commission, Mail Stop O–11F1, Washington, DC, 20555–0001. Ms. Alicia Williamson may be contacted at the aforementioned telephone number or e-mail address.

Dated at Rockville, Maryland, this 8th day of December, 2007.

For The Nuclear Regulatory Commission.

Robert Schaaf,

Acting Branch Chief, Environmental Branch B, Division of License Renewal, Office of Nuclear Reactor Regulation.

[FR Doc. E6–21272 Filed 12–13–06; 8:45 am]

BILLING CODE 7590–01–P

OFFICE OF THE UNITED STATES TRADE REPRESENTATIVE

Trade Policy Staff Committee; Notice of Availability and Request for Public Comment on Interim Environmental Review of United States-Korea Free Trade Agreement

AGENCY: Office of the United States Trade Representative.

ACTION: Notice of availability and request for public comment.

SUMMARY: The Office of the U.S. Trade Representative (USTR), on behalf of the Trade Policy Staff Committee (TPSC), seeks comment on the interim environmental review of the proposed United States-Korea Free Trade Agreement (FTA). The interim environmental review is available at *http://www.ustr.gov/Trade_Sectors/Environment/Environmental_Reviews/Section_Index.html.* Copies of the review will also be sent to interested members of the public by mail upon request.

DATES: Comments on the draft environmental review are requested by January 16, 2007 to inform the negotiations and the environmental review of the final agreement.

FOR FURTHER INFORMATION CONTACT: For procedural questions concerning public comments, contact Gloria Blue, Executive Secretary, TPSC, Office of the USTR, 1724 F Street, NW., Washington, DC 20508, telephone (202) 395–3475. Questions concerning the environmental review, or requests for copies, should be addressed to David Brooks, Environment and Natural Resources Section, Office of the USTR, telephone 202–395–7320.

SUPPLEMENTARY INFORMATION: The Trade Act of 2002, signed by the President on August 6, 2002, provides that the President shall conduct environmental reviews of [certain] trade agreements consistent with Executive Order 13121—(Environmental Review of Trade Agreements (64 Fed. Reg. 63,169, Nov. 18, 1999) and its implementing guidelines (65 Fed. Reg. 79,442, Dec. 19, 2000) and report on such reviews to the Committee on Ways and Means of the House of Representatives and the Committee on Finance of the Senate. The Order and guidelines are available at *http://www.ustr.gov/Trade_Sectors/Environment/Section_Index.html.*

The purpose of environmental reviews is to ensure that policymakers and the public are informed about reasonably foreseeable environmental impacts of trade agreements (both positive and negative), to identify complementarities between trade and environmental objectives, and to help shape appropriate responses if environmental impacts are identified. Reviews are intended to be one tool, among others, for integrating environmental information and analysis into the fluid, dynamic process of trade negotiations. USTR and the Council on Environmental Quality jointly oversee implementation of the Order and Guidelines. USTR, through the Trade Policy Staff Committee (TPSC), is responsible for conducting the individual reviews.

Written Comments

In order to facilitate prompt processing of submissions of comments, the Office of the United States Trade Representative strongly urges and prefers e-mail submissions in response to this notice. Persons submitting comments by e-mail should use the

following e-mail address: *FR0610@ustr.eop.gov* with the subject line: ''Korea Interim Environmental Review.'' Documents should be submitted as a Word Perfect, MSWord, or text (.TXT) file. Persons who make submissions by e-mail should not provide separate cover letters; information that might appear in a cover letter should be included in the submission itself. To the extent possible, any attachments to the submission should be included in the same file as the submission itself, and not as separate files. If submission by e-mail is impossible, comments should be made by facsimile to (202) 395–6143, attention: Gloria Blue.

Written comments will be placed in a file open to public inspection in the USTR Reading Room at 1724 F Street, NW., Washington DC. An appointment to review the file may be made by calling (202) 395–6186. The Reading Room is open to the public from 10–12 a.m. and from 1–4 p.m., Monday through Friday.

General information concerning the Office of the United States Trade Representative may be obtained by accessing its Internet Web site (*www.ustr.gov*).

Carmen Suro-Bredie,

Chair, Trade Policy Staff Committee.

[FR Doc. E6–21316 Filed 12–13–06; 8:45 am]

BILLING CODE 3190–W7–P

SECURITIES AND EXCHANGE COMMISSION

Sunshine Act Meeting

FEDERAL REGISTER CITATION OF PREVIOUS ANNOUNCEMENT: 71 FR 71597, December 11, 2006.

STATUS: Open Meeting.

PLACE: 100 F Street, NE., Auditorium, LL–002, Washington, DC.

DATE AND TIME OF PREVIOUSLY ANNOUNCED MEETING: Wednesday, December 13, 2006.

CHANGE IN THE MEETING: Additional Item.

The following matter will also be considered as part of Item 3 during the 10 a.m. Open Meeting scheduled for Wednesday, December 13, 2006:

The Commission will consider whether to propose changes to its requirements for attestation reports.

Commissioner Casey, as duty officer, determined that no earlier notice thereof was possible.

At times, changes in Commission priorities require alterations in the scheduling of meeting items. For further information and to ascertain what, if any, matters have been added, deleted or postponed, please contact the Office of the Secretary at (202) 551–5400.

Dated: December 11, 2006.

Nancy M. Morris,

Secretary.

[FR Doc. 06–9722 Filed 12–12–06; 10:53 am]

BILLING CODE 8011–01–P

SECURITIES AND EXCHANGE COMMISSION

[Release No. 34–54902; File No. SR–DTC–2006–13]

Self-Regulatory Organizations; The Depository Trust Company; Notice of Filing and Immediate Effectiveness of a Proposed Rule Change To Clarify Deposit Service Procedures To Help Assure Compliance With OFAC Regulations

December 8, 2006.

Pursuant to Section 19(b)(1) of the Securities Exchange Act of 1934 (''Act''),[1] notice is hereby given that on August 11, 2006, The Depository Trust Company (''DTC'') filed with the Securities and Exchange Commission (''Commission'') the proposed rule change as described in Items I, II, and III below, which Items have been prepared primarily by DTC. DTC filed the proposed rule change pursuant to Section 19(b)(3)(A) of the Act[2] and Rule 19b–4(f)(1)[3] thereunder so that the proposal was effective upon filing with the Commission. The Commission is publishing this notice to solicit comments on the proposed rule change from interested persons.

I. Self-Regulatory Organization's Statement of the Terms of Substance of the Proposed Rule Change

The proposed rule change clarifies recent changes to DTC's Deposit Service procedures.

II. Self-Regulatory Organization's Statement of the Purpose of, and Statutory Basis for, the Proposed Rule Change

In its filing with the Commission, DTC included statements concerning the purpose of and basis for the proposed rule change and discussed any comments it received on the proposed rule change. The text of these statements may be examined at the places specified in Item IV below. DTC has prepared summaries, set forth in Sections A, B, and C below, of the most significant aspects of such statements.[4]

A. Self-Regulatory Organization's Statement of the Purpose of, and Statutory Basis for, the Proposed Rule Change

The proposed rule change clarifies recent changes that DTC made to its Deposit Service procedures.[5] As part of those changes, DTC requires participants to certify to DTC that the participant screened the name of the party in whose name a deposited security certificate is registered against the U.S. Department of the Treasury's Office of Foreign Assets and Control (''OFAC'') list of Specially Designated Nationals and against OFAC's regulations and that there were no matches identified by such comparison. The purpose of this rule filing is to clarify that if the certificate has been assigned by the party in whose name the security was registered, participants only need to certify that they have screened the name of the most recent assignee and that there were no matches identified.[6]

DTC believes that the proposed rule change is consistent with the requirements of Section 17A of the Act[7] and the rules and regulations thereunder because it should improve DTC's ability to comply with applicable laws thereby reducing regulatory risks and associated costs to DTC and its participants.

B. Self-Regulatory Organization's Statement on Burden on Competition

DTC does not believe that the proposed rule change will have any impact or impose any burden on competition.

C. Self-Regulatory Organization's Statement on Comments on the Proposed Rule Change Received From Members, Participants, or Others

Written comments relating to the proposed rule change have not been solicited or received.

III. Date of Effectiveness of the Proposed Rule Change and Timing for Commission Action

The foregoing rule change has become effective pursuant to Section 19(b)(3)(A) of the Act[8] and Rule 19b–4(f)(1)[9]

[1] 15 U.S.C. 78s(b)(1).

[2] 15 U.S.C. 78s(b)(3)(A).

[3] 17 CFR 240.19b–4(f)(1).

[4] The Commission has modified the text of the summaries prepared by FICC.

[5] Securities Exchange Act Release No. 54120 (Jul. 10, 2006); 71 FR 40562 (Jul. 17, 2006).

[6] DTC Important Notice #B9959–06 (Jul. 18, 2006).

[7] 15 U.S.C. 78q–1.

[8] 15 U.S.C. 78s(b)(3)(A).

[9] 17 CFR 240.19b–4(f)(1).

thereunder because it constitutes a stated policy, practice, or interpretation with respect to the meaning, administration, or enforcement of an existing rule. At any time within 60 days of the filing of the proposed rule change, the Commission may summarily abrogate such rule change if it appears to the Commission that such action is necessary or appropriate in the public interest, for the protection of investors, or otherwise in furtherance of the purposes of the Act.

IV. Solicitation of Comments

Interested persons are invited to submit written data, views, and arguments concerning the foregoing, including whether the proposed rule change is consistent with the Act. Comments may be submitted by any of the following methods:

Electronic Comments

- Use the Commission's Internet comment form (*http://www.sec.gov/rules/sro.shtml*); or
- Send an e-mail to *rule-comments@sec.gov.* Please include File No. SR–DTC–2006–13 on the subject line.

Paper Comments

- Send paper comments in triplicate to Nancy M. Morris, Secretary, Securities and Exchange Commission, 100 F Street, NE., Washington, DC 20549–1090.

All submissions should refer to File No. SR–DTC–2006–13. This file number should be included on the subject line if e-mail is used. To help the Commission process and review your comments more efficiently, please use only one method. The Commission will post all comments on the Commission's Internet Web site (*http://www.sec.gov/rules/sro.shtml*). Copies of the submission, all subsequent amendments, all written statements with respect to the proposed rule change that are filed with the Commission, and all written communications relating to the proposed rule change between the Commission and any person, other than those that may be withheld from the public in accordance with the provisions of 5 U.S.C 552, will be available for inspection and copying in the Commission's Public Reference Section, 100 F Street, NE., Washington, DC 20549. Copies of such filing also will be available for inspection and copying at DTC's principal office and on DTC's Web site at *http://www.dtc.org/impNtc/mor/index.html.* All comments received will be posted without change; the Commission does not edit personal identifying information from submissions. You should submit only information that you wish to make available publicly. All submission should refer to File No. SR–DTC–2006–13 and should be submitted on or before January 4, 2007.

For the Commission by the Division of Market Regulation, pursuant to delegated authority.[10]

Florence E. Harmon,

Deputy Secretary.

[FR Doc. E6–21277 Filed 12–13–06; 8:45 am]

BILLING CODE 8011–01–P

[10] 17 CFR 200.30–3(a)(12).

SECURITIES AND EXCHANGE COMMISSION

[Release No. 34–54879; File No. SR–FICC–2006–12]

Self-Regulatory Organizations; Fixed Income Clearing Corporation; Order Approving a Proposed Rule Change Relating to Financial Responsibility, Operational Capability, Insolvency, and Ceasing To Act

December 6, 2006.

On June 15, 2006 the Fixed Income Clearing Corporation (''FICC'') filed a proposed rule change with the Securities and Exchange Commission (''Commission'') pursuant to Section 19(b)(1) of the Securities Exchange Act of 1934 (''Act'')[1] and on September 22, 2006, amended the proposed rule change. Notice of the proposal was published in the **Federal Register** on October 4, 2006.[2] No comment letters were received. For the reasons discussed below, the Commission is approving the proposed rule change.

I. Description

The rule change will amend FICC's Government Securities Division's (''GSD'') and Mortgage Backed Securities Division's (''MBSD'') rules relating to members' or applicants' financial responsibility, operational capability, and insolvency and to FICC ceasing to act for members.

A. Cease To Act and Insolvency Rules

FICC will amend GSD's rules governing when FICC will cease to act for a member in a noninsolvency situation, GSD Rule 21, and in an insolvency situation, GSD Rule 22. Such changes will conform GSD's rules to the rules of FICC's clearing agency affiliate, the National Securities Clearing Corporation (''NSCC'').

GSD Rule 21, which addressed noninsolvency situations, will be renamed ''Restriction on Access to Services'' and will be similar to NSCC Rule 46. While revised Rule 21 is triggered by essentially the same criteria that are contained in the old GSD rule,[3] the revised rule expands the remedies that FICC could exercise beyond only ''ceasing to act'' or ''ceasing to accept data'' on behalf of the member. Specifically, FICC, after notifying and providing an opportunity to request a hearing to the member, will be able to suspend, prohibit, or limit a member's access to one or more of FICC's services.

GSD Rule 22, which addresses insolvency situations, remains essentially in its old form except that its close-out provisions are amended and are being moved to new Rule 22A.

New Rule 22A sets forth the procedures that FICC will follow when it ceases to act for a member pursuant to either Rule 21 or Rule 22. Under new Rule 22A, FICC will initiate the close-out process with respect to a member for which it has ceased to act for any reason permitted by its rules.[4] In addition, the term Cut-Off Time for noninsolvency situations will be added to Rule 22A.[5] Although this term is similar to the Time of Insolvency term used in old Rule 22, a key difference between the terms is that members will be notified in advance of the Cut-Off Time.

The rule change also makes technical changes to conform existing references to Rules 21 and 22 throughout GSD's rules to these revisions.[6]

B. General Continuance Standards

FICC will add new language to Section 5 of GSD Rule 3 and a new Section 18, Article III, Rule 1 to MBSD's rules, which will be similar to NSCC Rule 15, that enables FICC when it deems necessary or advisable to assure itself of a member's or an applicant's financial responsibility and operational capability. To assure itself, FICC may, but is not limited to: restrict or modify the member's use of any or all of FICC's services; require additional reporting by the member of its financial or operational condition; increase the member's clearing fund collateral; alter the proportions of cash, eligible netting

[1] 15 U.S.C. 78s(b)(1).

[2] Securities Exchange Act Release No. 54570 (Oct. 4, 2006), 71 FR 60591.

[3] Such triggers include the member failing to perform its obligations to FICC and FICC's determination that the member is in or is approaching financial difficulty.

[4] Currently, the close-out process applies only when FICC deems a member insolvent.

[5] As used in Rule 22A, the term Cut Off Time means the time that is specified in advance by FICC in a notice to members to be the time when FICC is deemed to have ceased to act for a member.

[6] Technical, conforming changes are being made to Rules 1, 3A, 4, 6A, 14 and new Rule 22A.

securities, and letters of credit contributing to the member's required clearing fund deposits; and prohibit the member from withdrawing excess clearing fund deposits.[7]

Because the proposed rule change gives FICC the general authority to require additional clearing fund collateral when FICC is seeking additional assurances from a member or applicant, the provisions in GSD's Rule 4 that require the posting of additional collateral for specific circumstances are being deleted.

C. Technical Amendments

FICC will make several technical amendments to GSD's and MBSD's rules. The terms ''Board'' and ''Board of Directors'' will be redefined to include a committee of FICC's Board of Directors that is acting under delegated authority of the Board. Accordingly, references to specific board committees throughout both divisions' rules will be replaced simply by the term ''Board,'' which will include any such board committees.

II. Discussion

Section 17A(b)(3)(F) of the Act[8] requires that the rules of a clearing agency assure the safeguarding of securities and funds that are in the custody or control of the clearing agency or for which it is responsible. The Commission finds that the proposed rule change is consistent with this obligation because it should enhance FICC's ability to identify members that present greater financial and operational risk and expands the remedies available to FICC to protect itself when dealing with such members. As a result, the proposed rule change should improve FICC's capacity to safeguard securities and funds in its custody or control or for which it is responsible.

III. Conclusion

On the basis of the foregoing, the Commission finds that the proposal is consistent with the requirements of the Act and in particular with the requirements of Section 17A of the Act[9] and the rules and regulations thereunder.

It is therefore ordered, pursuant to Section 19(b)(2) of the Act, that the proposed rule change (File No. SR–FICC–2006–12) be, and hereby is, approved.[10]

For the Commission by the Division of Market Regulation, pursuant to delegated authority.[11]

Florence E. Harmon,

Deputy Secretary.

[FR Doc. E6–21234 Filed 12–13–06; 8:45 am]

BILLING CODE 8011–01–P

[7] These proposed actions are similar to those that FICC has proposed to undertake with respect to a member undergoing a wind-down in a rule filing pending with the Commission. SR–FICC–2006–05.

[8] 15 U.S.C. 78q–1(b)(3)(F).

[9] 15 U.S.C. 78q–1.

[10] In approving the proposed rule change, the Commission considered the proposal's impact on efficiency, competition and capital formation. 15 U.S.C. 78c(f).

[11] 17 CFR 200.30–3(a)(12).

SECURITIES AND EXCHANGE COMMISSION

[Release No. 34–54899; File No. SR–FICC–2006–11]

Self-Regulatory Organizations; Fixed Income Clearing Corporation; Order Approving a Proposed Rule Change Relating to Establishing New Reporting Processes To Support the Bilateral Comparison of Pool Details Associated With Specified Pool Trade Activity

December 8, 2006.

On June 15, 2006, the Fixed Income Clearing Corporation (''FICC'') filed with the Securities and Exchange Commission (''Commission'') a proposed rule change pursuant to Section 19(b)(1) of the Securities Exchange Act of 1934 (''Act'')[1] and on June 30, 2006, amended the proposed rule change. Notice of the proposed rule change was published in the **Federal Register** on October 24, 2006.[2] No comment letters were received. For the reasons discussed below, the Commission is approving the proposed rule change.

I. Description

The proposed rule change will add new rules to FICC's Mortgage Backed Securities Division (''MBSD'') Rulebook to establish new reporting processes to support the bilateral comparison of pool details associated with specified pool trade (''SPT'') activity. Specifically, FICC will enable MBSD members to submit the pool number and original face value for all SPT activity through its real time trade matching (''RTTM'') service. This rule filing will not change how MBSD currently manages risk for these trades at the TBA level in that MBSD's rules will continue to stipulate that SPT's may be treated as TBA's in instances of member insolvency.

In conjunction with establishing this new service, FICC will make two new reports available to members: The RTTM Purchase and Sale Report and the RTTM Open Commitment Report.[3] These reports will reflect the submission of pool number and original face value[4] as matching criteria submitted by members. Finally, FICC will include new fees for the submission of SPTs to the Schedule of Charges in the MBSD Rulebook.

II. Discussion

Section 17A(b)(3)(F) of the Act[5] requires that the rules of a clearing agency be designed to promote the prompt and accurate clearance and settlement of securities transactions. The Commission finds that the proposed rule change is consistent with this requirement because it will provide a more efficient process for MBSD members to report and compare SPT transaction information and thereby should promote the prompt and accurate clearance and settlement of such transactions.

III. Conclusion

On the basis of the foregoing, the Commission finds that the proposal is consistent with the requirements of the Act and in particular with the requirements of Section 17A of the Act[6] and the rules and regulations thereunder.

It is therefore ordered, pursuant to Section 19(b)(2) of the Act, that the proposed rule change (File No. SR–FICC–2006–11) be, and hereby is, approved.[7]

For the Commission by the Division of Market Regulation, pursuant to delegated authority.[8]

Florence E. Harmon,

Deputy Secretary.

[FR Doc. E6–21278 Filed 12–13–06; 8:45 am]

BILLING CODE 8011–01–P

[1] 15 U.S.C. 78s(b)(1).

[2] Securities Exchange Act Release No. 54609 (Oct. 16, 2006), 71 FR 62324.

[3] These reports will not replace MBSD's Purchase and Sale Report or Open Commitment Report, which will continue to reflect specified pool trades as TBA trades.

[4] In addition to pool number and original face value, existing matching fields (such as TBA CUSIP and price) will continue to be populated by members.

[5] 15 U.S.C. 78q–1(b)(3)(F).

[6] 15 U.S.C. 78q–1.

[7] In approving the proposed rule change, the Commission considered the proposal's impact on efficiency, competition and capital formation. 15 U.S.C. 78c(f).

[8] 17 CFR 200.30–3(a)(12).

SECURITIES AND EXCHANGE COMMISSION

[Release No. 34–54872; File No. SR–NASD–2006–128]

Self-Regulatory Organizations; National Association of Securities Dealers, Inc.; Notice of Filing and Order Granting Accelerated Approval of Proposed Rule Change Relating to Establishing an Effective Date for Amendments to NASD Rule 2340

December 5, 2006.

Pursuant to Section 19(b)(1) of the Securities Exchange Act of 1934 (''Act'')[1] and Rule 19b–4 thereunder,[2] notice is hereby given that on November 15, 2006, the National Association of Securities Dealers, Inc. (''NASD'') filed with the Securities and Exchange Commission (''SEC'' or ''Commission'') the proposed rule change as described in Items I and II below, which Items have been prepared by NASD. The Commission is publishing this notice to solicit comments on the proposed rule change from interested persons. For the reasons discussed below, the Commission is granting accelerated approval of the proposed rule change.

I. Self-Regulatory Organization's Statement of the Terms of Substance of the Proposed Rule Change

NASD is filing the proposed rule change to establish May 31, 2007 as the effective date for the amendments to NASD Rule 2340 (concerning customer account statements) that the SEC approved in September 2006.[3] The amendments require customer account statements to include a statement advising customers to promptly report any inaccuracy or discrepancy in their account to the introducing firm and clearing firm (where these are different firms) and to re-confirm any oral communication in writing. No changes are being proposed to NASD rule text.

II. Self-Regulatory Organization's Statement of the Purpose of, and Statutory Basis for, the Proposed Rule Change

In its rule filing with the Commission, NASD included statements concerning the purpose of and basis for the proposed rule change and discussed any comments it received on the proposed rule change. The text of these statements may be examined at the places specified in Item III below. NASD has prepared summaries, set forth in Sections A, B, and C below, of the most significant aspects of such statements.

A. Self-Regulatory Organization's Statement of the Purpose of, and Statutory Basis for, the Proposed Rule Change

1. Purpose

NASD is filing the proposed rule change to establish May 31, 2007 as the effective date for the amendments to NASD Rule 2340 (concerning customer account statements) that the SEC approved in September 2006. Consistent with recommendations made by the Government Accountability Office (''GAO''), the amendments to Rule 2340 will require customer account statements to include an advisory statement indicating that a customer should report promptly any inaccuracy or discrepancy in its account to its clearing firm and (if it is a different firm) its introducing firm. The advisory statement also would inform customers that any oral communications should be re-confirmed in writing to further protect the customer's rights, including rights under the Securities Investor Protection Act (''SIPA'').

Pursuant to the SEC's approval of SR–NASD–2004–171, the amendments to Rule 2340 will go into effect on March 6, 2007. However, for several reasons, NASD seeks to delay implementation of these provisions until May 31, 2007. An implementation date of May 31, 2007 will conform to the proposed implementation date of a similar New York Stock Exchange LLC (''NYSE'') rule change,[4] thereby reducing possible confusion for firms that are members of both self-regulatory organizations (''SROs''). In addition, consistent with recommendations made by the GAO, NASD has filed a related rule change, which generally would require members to advise all customers, in writing at the time of account opening, and at other specified times, that they may obtain information about the Securities Investor Protection Corporation (''SIPC'') by contacting SIPC, and to provide such customers with SIPC's telephone number and Web site.[5] The NYSE also has filed a similar rule change,[6] and both NASD and NYSE are proposing a May 31, 2007 effective date for those related amendments. Finally, establishing May 31, 2007 as the effective date will give firms sufficient time to make necessary changes to their customer account statements and procedures.

2. Statutory Basis

NASD believes that the proposed rule change is consistent with the provisions of Section 15A(b)(6) of the Act,[7] which provides, among other things, that NASD rules must be designed to prevent fraudulent and manipulative acts and practices, to promote just and equitable principles of trade, and, in general, to protect investors and the public interest. NASD believes that the proposed rule change is consistent with the provisions of the Act noted above because each customer will be advised to promptly report any discrepancies or inaccuracies in his or her account to his or her brokerage firm (both the clearing firm and introducing firm, where the customer's account receives services from both) and to re-confirm any oral communications in writing, thereby further protecting the customer's rights, including rights under SIPA. NASD further believes that extending the effective date will ensure that firms will have sufficient time to make the necessary changes to their account statements and procedures to be able to comply with the new SIPC disclosure requirements, and that dual members will not have conflicting effective dates.

B. Self-Regulatory Organization's Statement on Burden on Competition

NASD does not believe that the proposed rule change will result in any burden on competition that is not necessary or appropriate in furtherance of the purposes of the Act.

C. Self-Regulatory Organization's Statement on Comments on the Proposed Rule Change Received From Members, Participants, or Others

Written comments were neither solicited nor received.

III. Solicitation of Comments

Interested persons are invited to submit written data, views and arguments concerning the foregoing, including whether the proposed rule change is consistent with the Act. Comments may be submitted by any of the following methods:

Electronic Comments

- Use the Commission's Internet comment form (*http://www.sec.gov/rules/sro.shtml*); or
- Send an e-mail to *rule-comments@sec.gov.* Please include File Number SR–NASD–2006–128 on the subject line.

[1] 15 U.S.C. 78s(b)(1).

[2] 17 CFR 240.19b–4.

[3] *See* Securities Exchange Act Rel. No. 54411 (September 7, 2006), 71 FR 54105 (September 13, 2006), as corrected by Securities Exchange Act Rel. No. 54411A (October 6, 2006), 71 FR 61115 (October 17, 2006); SR–NASD–2004–171.

[4] *See* SR–NYSE–2005–09.

[5] *See* SR–NASD–2006–124.

[6] *See* SR–NYSE–2005–09.

[7] 15 U.S.C. 78o–3(b)(6).

Paper Comments

• Send paper comments in triplicate to Nancy M. Morris, Secretary, Securities and Exchange Commission, 100 F Street, NE., Washington, DC 20549–1090.

All submissions should refer to File Number SR–NASD–2006–128. This file number should be included on the subject line if e-mail is used. To help the Commission process and review your comments more efficiently, please use only one method. The Commission will post all comments on the Commission's Internet Web site (*http://www.sec.gov/rules/sro.shtml*). Copies of the submission, all subsequent amendments, all written statements with respect to the proposed rule change that are filed with the Commission, and all written communications relating to the proposed rule change between the Commission and any person, other than those that may be withheld from the public in accordance with the provisions of 5 U.S.C. 552, will be available for inspection and copying in the Commission's Public Reference Room. Copies of such filing also will be available for inspection and copying at the principal office of NASD. All comments received will be posted without change; the Commission does not edit personal identifying information from submissions. You should submit only information that you wish to make available publicly. All submissions should refer to the File Number SR–NASD–2006–128 and should be submitted on or before January 4, 2007.

IV. Commission's Findings and Order Granting Accelerated Approval of the Proposed Rule Change

NASD has requested that the Commission find good cause pursuant to Section 19(b)(2) of the Act [8] for approving the proposed rule change prior to the 30th day after publication in the **Federal Register**. After careful consideration, the Commission finds that the proposed rule change is consistent with the Act, and in particular, with Section 15A(b)(6) of the Act,[9] which provides, among other things, that NASD rules must be designed to prevent fraudulent and manipulative acts and practices, to promote just and equitable principles of trade, and, in general, to protect investors and the public interest. In particular, by conforming the effective date of this disclosure requirement with the effective date of similar disclosure requirements of NASD and the NYSE, the proposal will reduce the possibility of confusion and will promote the effective implementation of these disclosure requirements.

Pursuant to Section 19(b)(2) of the Act,[10] the Commission finds good cause for approving the proposed rule change before the thirtieth day after the date of publication of notice of filing thereof. Accelerating approval will give NASD additional time to notify its members about the revised effective date for these amendments and help to ensure that firms have sufficient time to efficiently make the changes to their account statements and procedures needed to comply with this and related disclosure requirements.

V. Conclusion

It is therefore ordered, pursuant to Section 19(b)(2) of the Act,[11] that the proposed rule change (SR–NASD–2006–128) is hereby approved on an accelerated basis.

For the Commission, by the Division of Market Regulation, pursuant to delegated authority.[12]

Florence E. Harmon,

Deputy Secretary.

[FR Doc. E6–21236 Filed 12–13–06; 8:45 am]

BILLING CODE 8011–01–P

[8] 15 U.S.C. 78s(b)(2).

[9] 15 U.S.C. 78o–3(b)(6).

[10] 15 U.S.C. 78s(b)(2).

[11] 15 U.S.C. 78s(b)(2).

[12] 17 CFR 200.30–3(a)(12).

SECURITIES AND EXCHANGE COMMISSION

[Release No. 34–54900; File No. SR–NSCC–2006–12]

Self-Regulatory Organizations; National Securities Clearing Corporation; Notice of Filing of a Proposed Rule Change Relating to Buy-Ins of Municipal Securities

December 8, 2006.

Pursuant to Section 19(b)(1) of the Securities Exchange Act of 1934 (''Act''),[1] notice is hereby given that on October 16, 2006, the National Securities Clearing Corporation (''NSCC'') filed with the Securities and Exchange Commission (''Commission'') the proposed rule change as described in Items I, II, and III below, which Items have been prepared primarily by NSCC. The Commission is publishing this notice to solicit comments on the proposed rule change from interested persons.

I. Self-Regulatory Organization's Statement of the Terms of Substance of the Proposed Rule Change

The proposed rule change consists of modifications to NSCC's rules concerning buy-ins of municipal securities.

II. Self-Regulatory Organization's Statement of the Purpose of, and Statutory Basis for, the Proposed Rule Change

In its filing with the Commission, NSCC included statements concerning the purpose of and basis for the proposed rule change and discussed any comments it received on the proposed rule change. The text of these statements may be examined at the places specified in Item IV below. NSCC has prepared summaries, set forth in Sections A, B, and C below, of the most significant aspects of such statements.[2]

A. Self-Regulatory Organization's Statement of the Purpose of, and Statutory Basis for, the Proposed Rule Change

The purpose of this filing is to amend NSCC's rules to streamline the processing of continuous net settlement (''CNS'') buy-ins of municipal securities. At the request of members and after consultation with the Buy-In Subcommittee of the Securities Industry Association, NSCC proposes to modify Rule 11 (CNS System), Procedure VII (CNS Accounting Operation) and Procedure X (Execution of CNS Buy-Ins) with respect to CNS buy-ins of municipal securities as set forth below.

Executions of buy-ins in municipal securities are governed by the rules of the Municipal Securities Rulemaking Board (''MSRB'') and have a ten-day cycle from notification of intent to buy-in to buy-in execution. In contrast, buy-ins for equity and corporate bond securities have a two-day cycle.

Under NSCC's rules (except with respect to securities subject to a voluntary corporate reorganization), an NSCC member that has a long position at the end of any day (''originator'') may submit to NSCC a Notice of Intention to Buy-In (''Buy-In Notice'') specifying a quantity of securities not exceeding such long position that it intends to buy-in (''Buy-In Position''). The day the Buy-In Notice is submitted is referred to as N, and the succeeding days are referred to as N+1 and N+2. The Buy-In Position is given high priority for CNS allocations until expiration of the buy-in.

[2] The Commission has modified the text of the summaries prepared by NSCC.

However, while increased priority is provided to facilitate the allocation of the Buy-In Position in CNS, municipal securities are thinly traded and, as such, the increased allocation priority has not been generally effective in accelerating the delivery process. Accordingly, when a municipal security Buy-In Position is not satisfied by a CNS allocation, the long member must have its Buy-In Position exited from CNS in order to be able to proceed under the MSRB rules, which entail issuing a new buy-in notice and then waiting an additional ten days before executing the buy-in. As a result, members typically ask NSCC to exit the municipal security Buy-In Position from CNS after they issue a Buy-In Notice to CNS. NSCC then submits manual instructions that produce receive and deliver obligations to the affected parties two days after the notice is issued.[3]

To assist members in their timely processing of buy-ins in municipal securities, NSCC proposes to modify its rules and procedures to automatically exit from CNS the Buy-In Position of a long member that has submitted a Buy-In Notice in a municipal security. CNS will automatically exit such position prior to the night cycle on N+1, creating a broker-to-broker close-out receive and deliver obligation between the long member and the oldest short member(s). The net result will be that the Buy-In Position will be automatically exited from CNS one day earlier than is currently the case, which will allow the buy-in process to commence one day earlier.

NSCC plans to implement these changes as soon as practicable after the Commission's approval of this filing. NSCC will advise its members of the implementation through an Important Notice.

NSCC believes that the proposed rule change is consistent with Section 17A of the Act[4] and the rules and regulations thereunder because it should result in municipal securities buy-ins being executed more expeditiously thereby fostering cooperation and coordination with persons engaged in the clearance and settlement of securities transactions and removing impediments to and perfecting the mechanism of a national system for the prompt and accurate clearance and settlement of securities transactions.

B. Self-Regulatory Organization's Statement on Burden on Competition

NSCC does not believe that the proposed rule change will have any impact or impose any burden on competition. NSCC will notify the Commission of any comments it receives.

C. Self-Regulatory Organization's Statement on Comments on the Proposed Rule Change Received From Members, Participants, or Others

NSCC has not solicited or received written comments relating to the proposed rule change. NSCC will notify the Commission of any written comments it receives.

III. Date of Effectiveness of the Proposed Rule Change and Timing for Commission Action

Within thirty-five days of the date of publication of this notice in the **Federal Register** or within such longer period (i) as the Commission may designate up to ninety days of such date if it finds such longer period to be appropriate and publishes its reasons for so finding or (ii) as to which the self-regulatory organization consents, the Commission will:

(A) By order approve such proposed rule change or

(B) Institute proceedings to determine whether the proposed rule change should be disapproved.

IV. Solicitation of Comments

Interested persons are invited to submit written data, views, and arguments concerning the foregoing, including whether the proposed rule change is consistent with the Act. Comments may be submitted by any of the following methods:

Electronic Comments

- Use the Commission's Internet comment form (*http://www.sec.gov/rules/sro.shtml*); or
- Send an e-mail to *rule-comments@sec.gov.* Please include File No. SR–NSCC–2006–12 on the subject line.

Paper Comments

- Send paper comments in triplicate to Nancy M. Morris, Secretary, Securities and Exchange Commission, 100 F Street, NE., Washington DC 20549–1090.

All submissions should refer to File No. SR–NSCC–2006–12. This file number should be included on the subject line if e-mail is used. To help the Commission process and review your comments more efficiently, please use only one method. The Commission will post all comments on the Commission's Internet Web site (*http://www.sec.gov/rules/sro.shtml*). Copies of the submission, all subsequent amendments, all written statements with respect to the proposed rule change that are filed with the Commission, and all written communications relating to the proposed rule change between the Commission and any person, other than those that may be withheld from the public in accordance with the provisions of 5 U.S.C 552, will be available for inspection and copying in the Commission's Public Reference Section, 100 F Street, NE., Washington, DC 20549. Copies of such filing also will be available for inspection and copying at NSCC's principal office and on NSCC's Web site at *http://www.nscc.com/legal/index.html.* All comments received will be posted without change; the Commission does not edit personal identifying information from submissions. You should submit only information that you wish to make available publicly. All submissions should refer to File No. SR–NSCC–2006–12 and should be submitted on or before January 4, 2007.

For the Commission by the Division of Market Regulation, pursuant to delegated authority.[5]

Florence E. Harmon,

Deputy Secretary.

[FR Doc. E6–21281 Filed 12–13–06; 8:45 am]

BILLING CODE 8011–01–P

[3] Current NSCC Procedure X.A.2.

[4] 15 U.S.C. 78q–1.

[5] 17 CFR 200.30–3(a)(12).

SECURITIES AND EXCHANGE COMMISSION

[Release No. 34–54898; File No. SR–OCC–2006–08]

Self-Regulatory Organizations; The Options Clearing Corporation; Notice of Filing of Proposed Rule Change To Revise Stock Futures Adjustment Methodology

December 8, 2006.

Pursuant to Section 19(b)(1) of the Securities Exchange Act of 1934 (''Act''),[1] notice is hereby given that on May 19, 2006, The Options Clearing Corporation (''OCC'') filed with the Securities and Exchange Commission (''Commission'') the proposed rule change as described in Items I, II, and III below, which items have been prepared by OCC. The Commission is publishing this notice to solicit comments on the proposed rule change from interested parties.

[1] 15 U.S.C. 78s(b)(1).

I. Self-Regulatory Organization's Statement of the Terms of Substance of the Proposed Rule Change

OCC is seeking to amend Article XII (Futures and Futures Options), Section 3 (Adjustments to Futures and Futures Options) of OCC's By-Laws to conform to the changes sought in proposed rule change SR–OCC–2006–01 to Article VI (Clearance of Exchange Transactions), Section 11A (Adjustments for Stock Option Contracts).[2]

II. Self-Regulatory Organization's Statement of the Purpose of, and Statutory Basis for, the Proposed Rule Change

In its filing with the Commission, OCC included statements concerning the purpose of and basis for the proposed rule change and discussed any comments it received on the proposed rule change. The text of these statements may be examined at the places specified in Item IV below. OCC has prepared summaries, set forth in sections (A), (B), and (C) below, of the most significant aspects of these statements.[3]

(A) Self-Regulatory Organization's Statement of the Purpose of, and Statutory Basis for, the Proposed Rule Change

On January 12, 2006, OCC filed with the Commission proposed rule change SR–OCC–2006–01. Pursuant to SR–OCC–2006–01, OCC proposed, among other things, to amend its adjustment rules in Article VI, Section 11A for stock option contracts with respect to stock dividends, stock distributions, and stock splits. Subject to the Commission approving proposed rule change SR–OCC–2006–01, OCC is proposing to amend Article XII, Section 3 to ensure stock futures contracts can be adjusted in a manner consistent with adjustments made to stock option contracts on the same underlying security.

As described in proposed rule change SR–OCC–2006–01, OCC desires to change certain of its adjustment rules with respect to stock option contracts to eliminate the need to round strike prices and/or units of trading in the event of certain stock dividends, stock distributions, and stock splits.[4] The adjustment rules for stock futures as currently provided in Article XII, Section 3 parallel the current adjustment rules for stock options provided in Article VI, Section 11A. This uniformity ensures stock futures contracts can be adjusted in a manner consistent with adjustments made to stock option contracts on the same underlying security. The changes to Article XII, Section 3 that are the subject of this proposed rule change are made solely to track the changes proposed to be made to Article VI, Section 11A and are intended to ensure that adjustments to stock options and to stock futures made for stock dividends, stock distributions, and stock splits will remain consistent with respect to an underlying security.

As noted above, the central purpose of the rule change proposed in SR–OCC–2006–01 is to eliminate inequities which result from certain rounding practices currently required by OCC's By-Laws because stock option strike prices are quoted in and therefore rounded to the nearest one-eighth. Stock futures do not have the same issue because they are quoted in decimals. Nevertheless, in order to ensure adjustments for stock options and for stock futures remain consistent, OCC proposes to revise the adjustment rules with respect to stock futures to match the proposed revised adjustment rules with respect to stock options for stock dividends, stock distributions, and stock splits.

OCC will not implement the proposed rule change described herein until implementation of SR–OCC–2006–01. In the event any amendments are made to SR–OCC–2006–01, OCC would seek approval for conforming parallel changes to this proposed rule change.

OCC believes that the proposed rule change is consistent with the requirements of Section 17A of the Act[5] and the rules and regulations thereunder applicable to OCC because it is intended solely to keep the adjustment rules for stock futures with respect to stock dividends, stock distributions, and stock splits consistent with the adjustment rules for stock options with respect to stock dividends, stock distributions, and stock splits and thus should protect investors.

(B) Self-Regulatory Organization's Statement on Burden on Competition

OCC does not believe that the proposed rule change would impose any burden on competition.

(C) Self-Regulatory Organization's Statement on Comments on the Proposed Rule Change Received From Members, Participants or Others

Written comments were not and are not intended to be solicited with respect to the proposed rule change, and none have been received.

III. Date of Effectiveness of the Proposed Rule Change and Timing for Commission Action

Within thirty-five days of the date of publication of this notice in the **Federal Register** or within such longer period (i) as the Commission may designate up to ninety days of such date if it finds such longer period to be appropriate and publishes its reasons for so finding or (ii) as to which the self-regulatory organization consents, the Commission will:

(A) by order approve such proposed rule change or

(B) institute proceedings to determine whether the proposed rule change should be disapproved.

IV. Solicitation of Comments

Interested persons are invited to submit written data, views, and arguments concerning the foregoing, including whether the proposed rule change, as amended, is consistent with the Act. Comments may be submitted by any of the following methods:

Electronic Comments

- Use the Commission's Internet comment form (*http://www.sec.gov/rules/sro.shtml*); or
- Send an e-mail to *rule-comments@sec.gov*. Please include File Number SR–OCC–2006–08 on the subject line.

Paper Comments

- Send paper comments in triplicate to Nancy M. Morris, Secretary, Securities and Exchange Commission, 100 F Street, NE., Washington, DC 20549–1090.

All submissions should refer to File Number SR–OCC–2006–08. This file number should be included on the subject line if e-mail is used. To help the Commission process and review your comments more efficiently, please use only one method. The Commission will post all comments on the Commission's Internet Web site (*http://www.sec.gov/rules/sro.shtml*). Copies of the submission, all subsequent amendments, all written statements with respect to the proposed rule change that are filed with the Commission, and all written communications relating to the proposed rule change between the

[2] The Commission published the notice for proposed rule change SR–OCC–2006–01 on March 9, 2006. Securities Exchange Act Release No. 53400 (March 2, 2006), 71 FR 12226.

[3] The Commission has modified the text of the summaries prepared by OCC.

[4] The notice for SR–OCC–2006–01 describes OCC's proposed changes to and the rationale for the proposed rule change to its adjustment rules for stock options.

[5] 15 U.S.C. 78q–1.

Commission and any person, other than those that may be withheld from the public in accordance with the provisions of 5 U.S.C. 552, will be available for inspection and copying in the Commission's Public Reference Section, 100 F Street, NE., Washington, DC 20549. Copies of such filing also will be available for inspection and copying at the principal office of OCC and on OCC's Web site at *www.theocc.com*. All comments received will be posted without change; the Commission does not edit personal identifying information from submissions. You should submit only information that you wish to make available publicly. All submissions should refer to File Number SR–OCC–2006–08 and should be submitted on or before December 29, 2006.

For the Commission by the Division of Market Regulation, pursuant to delegated authority.[6]

Florence E. Harmon,

Deputy Secretary.

[FR Doc. E6–21276 Filed 12–13–06; 8:45 am]

BILLING CODE 8011–01–P

DEPARTMENT OF STATE

[Public Notice 5644]

60-Day Notice of Proposed Information Collection: DS–5501, Electronic Diversity Visa Entry Form, OMB Control Number 1405–0153

ACTION: Notice of request for public comments.

SUMMARY: The Department of State is seeking Office of Management and Budget (OMB) approval for the information collection described below. The purpose of this notice is to allow 60 days for public comment in the **Federal Register** preceding submission to OMB. We are conducting this process in accordance with the Paperwork Reduction Act of 1995.

- *Title of Information Collection:* Electronic Diversity Visa Entry Form.
- *OMB Control Number:* 1405–0153.
- *Type of Request:* Extension of Currently Approved Collection.
- *Originating Office:* Bureau of Consular Affairs, Office of Visa Services (CA/VO).
- *Form Number:* DS–5501.
- *Respondents:* Aliens entering the Diversity Visa Lottery.
- *Estimated Number of Respondents:* 6 million per year.
- *Estimated Number of Responses:* 6 million per year.
- *Average Hours Per Response:* 30 minutes.
- *Total Estimated Burden:* 3 million hours per year.
- *Frequency:* Once per entry.
- *Obligation to Respond:* Required to Obtain Benefits.

DATES: The Department will accept comments from the public up to 60 days from December 14, 2006.

ADDRESSES: You may submit comments by any of the following methods:

- *E-mail: VisaRegs@state.gov* (Subject line must read DS–5501 Reauthorization).
- *Mail (paper, disk, or CD–ROM submissions):* Chief, Legislation and Regulations Division, Visa Services—DS–5501 Reauthorization, 2401 E Street, NW., Washington DC 20520–30106.
- *Fax:* (202) 663–3898

You must include the DS form number, information collection title, and OMB control number in any correspondence.

FOR FURTHER INFORMATION CONTACT: Direct requests for additional information regarding the collection listed in this notice, including requests for copies of the proposed information collection and supporting documents, to Andrea Lage of the Office of Visa Services, U.S. Department of State, 2401 E Street, NW. L–603, Washington, DC 20522, who may be reached at (202) 663–1399 or *lageab@state.gov*.

SUPPLEMENTARY INFORMATION: We are soliciting public comments to permit the Department to:

- Evaluate whether the proposed information collection is necessary for the proper performance of our functions.
- Evaluate the accuracy of our estimate of the burden of the proposed collection, including the validity of the methodology and assumptions used.
- Enhance the quality, utility, and clarity of the information to be collected.
- Minimize the reporting burden on those who are to respond, including the use of automated collection techniques or other forms of technology.

Abstract of proposed collection:

The Department of State utilizes the Electronic Diversity Visa Lottery (EDV) Entry Form to elicit information necessary to ascertain the applicability of the legal provisions of the diversity program. Primary requirements are that the applicant is from a low admission country, is a high school graduate, or has two years of experience in a job that requires two years of training. The individuals complete the electronic entry forms and then applications are randomly selected for participation in the program.

Methodology:

The EDV Entry Form is available online at *http://www.dvlottery.state.gov* and can only be submitted electronically during the annual registration period.

Dated: November 14, 2006.

Stephen A. Edson,

Deputy Assistant Secretary, Bureau of Consular Affairs, Department of State.

[FR Doc. E6–21307 Filed 12–13–06; 8:45 am]

BILLING CODE 4710–06–P

DEPARTMENT OF STATE

[Public Number 5622]

Renewal of the Overseas Schools Advisory Council

The Department of State is renewing the Overseas Schools Advisory Council to provide a formal channel for regular consultation and advice from U.S. corporations and foundations regarding American-sponsored overseas schools. The Under Secretary for Management has determined that the committee is necessary and in the public interest.

The Assistant Secretary for Administration will appoint the members of the committee. The committee will follow the procedures prescribed by the Federal Advisory Committee Act (FACA). Meetings will be open to the public unless a determination is made in accordance with the FACA Section 10(d) and 5 U.S.C. 552b(c)(1) and (4) that a meeting or a portion of the meeting should be closed to the public. Notice of each meeting will be provided in the **Federal Register** at least 15 days prior to the meeting date.

For further information, contact Dr. Keith D. Miller, Executive Secretary of the committee at 202–261–8200.

Dated: November 30, 2006.

Keith D. Miller,

Executive Secretary, Overseas Schools Advisory Council, Department of State.

[FR Doc. E6–21299 Filed 12–13–06; 8:45 am]

BILLING CODE 4710–24–P

DEPARTMENT OF STATE

[Public Notice: 5589]

U.S. National Commission for UNESCO Notice of Commission Renewal

The Department of State announces the renewal of the U.S. National Commission for the United Nations Educational, Scientific, and Cultural Organization (UNESCO). The U.S.

[6] 17 CFR 200.30–3(a)(12).

National Commission for UNESCO, which operates pursuant to 22 U.S. Code 287o and the requirements of the Federal Advisory Committee Act (FACA), will provide recommendations to the U.S. Department of State. The primary focus of the recommendations will relate to the formulation and implementation of U.S. policy towards UNESCO on matters of education, science, communications, and culture. In its efforts to uphold and promote human rights, tolerance, and learning worldwide, the U.S. National Commission for UNESCO is necessary and in the public interest.

To contact the commission, please visit *www.state.gov/p/io/unesco* or call (202) 663–0026 or e-mail *DCUNESCO@state.gov.*

Susanna Connaughton,

Executive Director, U.S. National Commission for UNESCO, Bureau of International Organization Affairs, Department of State.

[FR Doc. E6–21298 Filed 12–13–06; 8:45 am]

BILLING CODE 4710–19–P

DEPARTMENT OF STATE

[Public Notice 5621]

Overseas Schools Advisory Council Notice of Meeting

The Overseas Schools Advisory Council, Department of State, will hold its Executive Committee Meeting on Thursday, January 18, 2007, at 9:30 a.m. in Conference Room 1107, Department of State Building, 2201 C Street, NW., Washington, DC. The meeting is open to the public.

The Overseas Schools Advisory Council works closely with the U.S. business community in improving those American-sponsored schools overseas, which are assisted by the Department of State and which are attended by dependents of U.S. Government families and children of employees of U.S. corporations and foundations abroad.

This meeting will deal with issues related to the work and the support provided by the Overseas Schools Advisory Council to the American-sponsored overseas schools. The agenda includes a review of the recent activities of American-sponsored overseas schools and the overseas schools regional associations, a review of projects selected for the 2005 and 2006 Educational Assistance Programs, which are under development, and selection of projects for the 2007 Educational Assistance Program.

Members of the general public may attend the meeting and join in the discussion, subject to the instructions of the Chair. Admittance of public members will be limited to the seating available. Access to the State Department is controlled, and individual building passes are required for all attendees. Persons who plan to attend should so advise the office of Dr. Keith D. Miller, Department of State, Office of Overseas Schools, Room H328, SA–1, Washington, DC 20522–0132, telephone 202–261–8200, prior to January 8, 2007. Each visitor will be asked to provide his/her date of birth and Social Security number at the time of registration and attendance and must carry a valid photo ID to the meeting. All attendees must use the C Street entrance to the building.

Dated: November 30, 2006.

Keith D. Miller,

Executive Secretary, Overseas Schools Advisory Council, Department of State.

[FR Doc. E6–21304 Filed 12–13–06; 8:45 am]

BILLING CODE 4710–24–P

DEPARTMENT OF STATE

[Public Notice 5626]

U.S. National Commission for UNESCO Notice of Teleconference Meeting

The U.S. National Commission for UNESCO will hold a conference call on Thursday, December 21, 2006 beginning at 11:30 a.m. Eastern Time. The open portion of the call should last approximately fifteen minutes and will address the UNESCO Associated Schools Project Network. Additional topic areas that relate to UNESCO may be discussed as needed.

The Commission will accept brief oral comments from members of the public during the open portion of this conference call. The public comment period will be limited to approximately ten minutes in total with about three minutes allowed per speaker. Members of the public who wish to present oral comments or listen to the conference call must make arrangements with the Executive Secretariat of the National Commission by December 18, 2006.

The second portion of the teleconference meeting will be closed to the public to allow the Commission to discuss applications for the UNESCO Young Professionals Program. This portion of the call will be closed to the public pursuant to section 10(d) of the Federal Advisory Committee Act and 5 U.S.C. 552b[c][6] because it is likely to involve discussion of information of a personal nature regarding the relative merits of individual applicants where disclosure would constitute a clearly unwarranted invasion of personal privacy. For more information or to arrange to participate in the open portion of the teleconference meeting, contact Alex Zemek, Deputy Executive Director of the U.S. National Commission for UNESCO, Washington, DC 20037. Telephone: (202) 663–0026; Fax: (202) 663–0035; E-mail: *DCUNESCO@state.gov.*

Dated: December 5, 2006.

Susanna Connaughton,

Executive Director, U.S. National Commission for UNESCO, Department of State.

[FR Doc. E6–21306 Filed 12–13–06; 8:45 am]

BILLING CODE 4710–19–P

DEPARTMENT OF TRANSPORTATION

Federal Highway Administration

National Safe Routes to School Task Force to the Secretary of Transportation

AGENCY: Federal Highway Administration (FHWA), DOT.

ACTION: Notice of meeting of advisory committee.

SUMMARY: This document announces the first meeting of the National Safe Routes to School Task Force to the Secretary of Transportation. This is the first meeting of the task force. The purpose of the Task Force is to advise the Secretary of Transportation, through the Federal Highway Administration (FHWA) Office of Safety, on strategies to advance Safe Routes to School (SRTS) Programs nationwide and to encourage children, including those with disabilities, to walk and bicycle to school pursuant to Section 1404(h) of the Safe, Accountable, Flexible, Efficient Transportation Equity Act: A Legacy for Users (SAFETEA–LU) (Pub. L. 109–59). This meeting is open to the public and will have time allocated for public testimony. The public is welcome to present written or oral comments to the Task Force.

DATES: The first meeting of the Task Force is scheduled for January 11, 2007, from 8:30 a.m. to 5 p.m., e.t.

ADDRESSES: The first meeting of the Task Force will be held at the Holiday Inn Capitol, 550 C Street, SW., Washington, DC 20024.

FOR FURTHER INFORMATION CONTACT: Mr. Tim Arnade, the Designated Federal Official, Safe Routes to School Program Manager, FHWA Office of Safety Programs, (202) 366–2205 (*Tim.Arnade@dot.gov*); Federal Highway Administration, 400 Seventh Street, SW., Washington, DC 20590.

SUPPLEMENTARY INFORMATION:

Background

On August 10, 2005, the President signed into law the Safe, Accountable, Flexible, Efficient Transportation Equity Act: A Legacy for Users (SAFETEA–LU) (Pub. L. 109–59). Section 1404(h) of SAFETEA–LU mandates the establishment of the Task Force as follows: ''The Secretary shall establish a national safe routes to school task force composed of leaders in health, transportation, and education, including representatives of appropriate Federal agencies, to study and develop a strategy for advancing safe routes to school programs nationwide.''

To carry out this requirement, the FHWA published a notice of intent to form an advisory committee in the **Federal Register** on July 11, 2006 (71 FR 39138). This notice, consistent with the requirements of the Federal Advisory Committee Act (FACA), 5 U.S.C. App. II, announced the establishment of the Task Force and invited comments and nominations for membership.

We received a total of fifty-four (54) nominations submitted to the docket for the National SRST Task Force; forty-six (46) were nominated to serve on behalf of a specific organization and eight (8) nominations were for particular individuals. In selecting the members of the Task Force consistent with statutory direction, the FHWA attempted to achieve a balanced membership representing a broad cross-section of the diverse agencies, organizations, and individuals that are involved in Safe Routes to School activities and programs in the United States. Pursuant to congressional conference report language (SAFETEA–LU, Joint Explanatory Statement of the Committee of the Conference, House Report 109–203, p. 866–867 or you may visit *http://safety.fhwa.dot.gov/saferoutes/legislation.htm* to view an electronic copy of the conference report language), a broad range of agencies was selected consisting of ''members [that are] representatives from State and local agencies as well as relevant non-profit organizations and associations including organizations or associations that represent automobile drivers.''

The seventeen (17) selected members are as follows:

Dr. Phyllis Agran, MD, MPH of the University of California, Irvine, CA will represent the American Academy of Pediatrics, a national health-related organization.

Ms. Barbara Alberson is Chief of the State and Local Injury Control Section of the California Department of Health. She will serve representing the State and Territorial Injury Prevention Directors Association, a national health-related organization.

Mr. Thomas Brahms is Executive Director of the Institute of Transportation Engineers. He is located in Washington, DC and will represent professionals working in the transportation field.

Ms. Sabrina Cruz is Principal of Brichta Elementary School in Tucson, AZ. Principal Cruz will represent the educational community and the Pima County-Tucson Safe Routes to School Program.

Mr. Richard Deal, PE, TE, PTOE is a City Traffic Engineer for Monterey, CA and will represent the American Public Works Association and professionals working in the transportation field.

The Honorable Sue Frank is Mayor of Raytown, Missouri. She is a locally elected official and will represent local interests through the National Association of Regional Councils.

Ms. Deborah Hubsmith of California is Coordinator of the Safe Routes to School National Partnership and will represent a national SRTS advocacy organization.

Mr. Michael King of Nelson and Nygaard Consulting Associates in New York, NY will represent the Association of Pedestrian and Bicycle Professionals and professionals working in the transportation field.

Ms. Lauren Marchetti will represent the National Center for Safe Routes to School at the UNC Highway Safety Research Center in Chapel Hill, NC. She is Director of the National Center for SRTS.

Ms. Refilwe Moeti is Public Health Advisor for the Division of Nutrition and Physical Activity at the Centers for Disease Control and Prevention (Department of Health and Human Services) in Atlanta, Georgia. Ms. Moeti represents a Federal Agency.

Scott Osberg, PhD is Director of Research for the American Automobile Association (AAA) Foundation for Traffic Safety in Washington, DC and will represent professionals working in the transportation field with an emphasis on safety.

Mr. Robert Ping is SRTS Program Director for the Oregon Bicycle Transportation Alliance and Willamette Pedestrian Coalition and will represent practitioners implementing SRTS programs on a local and statewide level.

Ms. Sharon Roerty is Director of Community Programs for the National Center for Bicycling and Walking and is located in Maplewood, NJ. Ms. Roerty will represent a national bicycle and pedestrian advocacy organization.

Ms. Donna Smallwood will serve as the Task Force Chair. Ms. Smallwood is the Operations Manager for MassRIDES in Boston, MA and will represent a State Department of Transportation SRTS program.

Ms. Leslie Thompson is a Planner for the Nashville Area MPO in Nashville, TN. She will represent regional interests through Tennessee's Safer Routes to School Advisory Council.

Mr. Roger Wentz of Fredericksburg, VA is the Executive Director of the American Traffic Safety Services Association and is a representative of the transportation industry.

Ms. Dale Ann Wright is an Officer for the West Valley City Police Department in West Valley City, UT and will represent local law enforcement agencies.

The agenda topics for this meeting will include (1) an overview of strategies that are already in place within the U.S. to advance SRTS programs; (2) an overview of national strategies that are used in other countries to advance SRTS programs; and (3) discussion of how best to advance SRTS programs nationwide.

The FHWA anticipates that the Task Force will meet three times in 2007. Two meetings will be held in Washington, DC, and the remaining meeting may be held in a location outside of Washington, DC. The FHWA will publish notices in the **Federal Register** to announce the times, dates, and locations of these future meetings. Meetings of the Task Force are open to the public and time will be provided in each meeting's schedule for comments by members of the public. Attendance will be necessarily limited by the size of the meeting room. Members of the public may present oral or written comments at the meeting. Written materials should be sent to the FHWA Task Force support contractor, Toole Design Group, 4603 Calvert Road, College Park, MD 20740, attention Ms. Amy Elmquist, (301) 927–1900, *srts@tooledesign.com*, ten (10) days prior to the meeting. Members of the public may also contact Ms. Amy Elmquist to be placed on the SRTS Task Force mailing list.

The National Safe Routes to School Task Force Charter, approved by the Secretary of Transportation, is as follows:

Federal Advisory Committee Charter

National Safe Routes to School Task Force Program Advisory Committee

U.S. Department of Transportation

1. *Purpose:* This charter establishes the National Safe Routes to School Task Force pursuant to the Federal Advisory Committee Act, as amended, 5 U.S.C., App. 2, and sets forth policies for its

operations. The statutory authority for the Task Force is section 1404(h) of the Safe, Accountable, Flexible, Efficient Transportation Equity Act: A Legacy for Users. (Pub. L. 109–59).

2. *Scope and Objectives:*

a. The Task Force will study and develop a strategy for advancing safe routes to school programs nationwide.

b. The Task Force will submit a report to the Secretary of Transportation containing the results of the study conducted, and a description of the strategy developed above, and the report shall contain information regarding use of funds for infrastructure-related projects and non-infrastructure related activities funded by the new Federal-aid Safe Routes to School Program.

c. The Task Force will not exercise program management, regulatory or program guidance responsibilities. It makes no decision directly affecting the programs on which it provides advice. The Task Force provides a forum for the development, consideration, and communication, from a knowledgeable and independent perspective, of a strategy for advancing Safe Routes to School Programs nationwide.

3. *Duties:* The Task Force will be responsive to the specific assignment provided for in law:

a. Study and develop a strategy for advancing safe routes to school programs nationwide.

b. Produce a report to the Secretary of Transportation containing the results of the study conducted, a description of the strategy developed, and information regarding the use of funds for infrastructure-related projects and non-infrastructure activities funded by the new Federal-aid Safe Routes to School Program.

4. *Duration:* The Task Force will remain in existence for 2 years from the effective date of this charter, unless recommended for termination or renewal by the Secretary of Transportation.

5. *Official to Whom Task Force Reports:* The Task Force will report to the Secretary of Transportation through the sponsor.

6. *Sponsor and Agency Providing Support:* The Federal Highway Administration (FHWA) Office of Safety serves as sponsor of the Task Force and will designate a Designated Federal Official to direct the affairs of the Task Force and will provide necessary administrative support.

7. *Membership:*

a. The Task Force shall be composed of representative members appointed by the Secretary of Transportation upon recommendation by the FHWA Office of Safety. Task Force members shall represent a cross section of the diverse agencies, organizations and individuals that are involved in Safe Routes to School activities and programs in the United States. By statute, the membership will be composed of leaders in health, transportation and education, including representatives of appropriate Federal agencies. Pursuant to congressional conference report language, Task Force members could also include representatives from State and local agencies, as well as relevant non-profit organizations and associations including organizations or associations that represent automobile drivers. The FHWA Office of Safety may consult with applicable organizations to determine the appropriate individuals to be recommended.

b. Members may also be considered who are not from the categories listed above to achieve the broad range of experience and understanding noted above.

c. Nonparticipation by any member in Task Force activities will be sufficient reason for the appointment of a replacement member by the Secretary. However, members may be represented at Task Force meetings and activities by alternates representing the same interest as the member. Alternates shall have full rights and duties of the membership. If a current member is unable to attend a meeting, that member or his/her organization may nominate an alternate for approval by the Task Force sponsor, at any time prior to the meeting or activity for which the appointment is made. Unless otherwise specified by the member, the appointment is valid for only one meeting or activity including any continuation of that meeting or activity.

d. Additional persons may be designated by the Chairman to serve on working groups of the committee to assist in the performance of its functions. Representatives of the Office of the Secretary of Transportation, any agency of the U.S. Department of Transportation, or any other Federal agency may participate in any meeting of the Task Force with the approval of the Designated Federal Official.

8. *Task Force Officers:* The Chairman will be appointed by the FHWA Office of Safety from among the members of the Task Force. The Chairman will conduct each meeting using generally accepted meeting management techniques, provide an opportunity for participation by each member and by public attendees, ensure adherence to the agenda, maintain order, and with the Designated Federal Official, prepare any recommendations to be submitted to the FHWA Office of Safety. In the absence of the Chairman, the Designated Federal Official will appoint a Vice Chairman to perform these duties.

9. *Meetings:*

a. Meetings will be held at the call of or with the advance approval of the Designated Federal Official. The Task Force will meet approximately three times the first year. Special meetings and working group meetings may be called as necessary. Notice of each scheduled meeting will be published in the **Federal Register**.

b. All meetings are open to the public. Members of the public are permitted to appear before or file statements with the Task Force. The Designated Federal Official, or a Departmental employee alternate designated by the DFO, must be present at each Task Force meeting. This official has the authority and duty to adjourn the meeting whenever such action is deemed to be in the public interest. A quorum exists when at least one-half of the appointed members are present. A quorum must exist for any official action, including voting, to occur. In any situation involving voting, the majority vote of members present will prevail. An agenda for each meeting must be approved in advance by the Designated Federal Official in consultation with the Task Force Chairman.

10. *Compensation:* Members of the Task Force may receive travel and per diem, as allowed by regulations and U.S. Department of Transportation policy.

11. *Costs:* Operating expenses are borne by the Task Force Sponsor. The estimated annual cost to the government is $200,000 inclusive of administrative contract support, report writing, meeting costs, travel, and other logistics expenses.

12. *Availability of Records:* Subject to Section 552 of Title 5, United States Code, the records, reports, minutes, agenda, and other documents made available to or by the Task Force will be available for public inspection and duplication in the FHWA Office of Safety, or through the Office of Safety Safe Routes to School Web site, *www.safety.fhwa.dot.gov/saferoutes/htm.*

13. *Reports:* The Designated Federal Official will furnish detailed minutes of each meeting to the sponsor. The minutes contain a record of the persons present, a complete and accurate description of matters discussed and conclusions reached, and copies of all reports received, issued or approved by the Committee. The Chairman and Designated Federal Official will certify the accuracy of the minutes.

14. *Working Groups:*

a. The Task Force Chairman may establish working groups to perform specific assignments with the approval of the Designated Federal Official. The Chairman may designate members from either the Task Force or the public to serve on working groups. The Working Group Chair will be a Task Force member. Recording or videotaping of working group meetings may only be performed by the sponsor, Designated Federal Official, or their designee.

b. Any recommendations to the Department by working groups must be approved by the Task Force as a whole.

15. *Filing Date:* October 27, 2006, is the filing date and the effective date of this Charter which will expire in 2 years from this filing date, unless sooner terminated or extended.

Conclusion: The first meeting of the National Safe Routes to School Task Force to the Secretary of Transportation will be held on January 11, 2007, from 8:30 a.m. to 5 p.m., e.t. at the Holiday Inn Capitol, 550 C Street, SW., Washington, DC 20024.

(Authority: Section 1404(h) of Pub. L. 109–59; Pub. L. 92–463, 5 U.S.C., App. II § 1.)

Issued on: December 7, 2006.

J. Richard Capka,

Federal Highway Administrator.

[FR Doc. E6–21226 Filed 12–13–06; 8:45 am]

BILLING CODE 4910–22–P

DEPARTMENT OF TRANSPORTATION

Surface Transportation Board

[STB Finance Docket No. 34958]

Nevada Pacific Railroad Corporation—Lease and Operation Exemption—Rail Lines of Pan Western Corporation

Nevada Pacific Railroad Corporation (NPRC),[1] a noncarrier, has filed a verified notice of exemption under 49 CFR 1150.31 to lease from Pan Western Corporation (Pan Western) and operate approximately 2.66 miles of private rail line owned by Pan Western, extending between milepost 0.0, and milepost 2.66, in Clark County, NV.[2] Pan Western intends to lease the railroad line to NPRC so that NPRC may initiate and provide common carrier rail operations on and over the line.

NPRC certifies that its projected revenues as a result of the transaction will not exceed those that would qualify it as a Class III carrier or $5 million annually. The transaction was scheduled to be consummated on or about November 21, 2006, the effective date of the exemption (7 days after the exemption was filed).

If the verified notice contains false or misleading information, the exemption is void *ab initio.* Petitions to revoke the exemption under 49 U.S.C. 10502(d) may be filed at any time. The filing of a petition to revoke will not automatically stay the transaction.

An original and 10 copies of all pleadings, referring to STB Finance Docket No. 34958, must be filed with the Surface Transportation Board, 1925 K Street, NW., Washington, DC 20423–0001. In addition, a copy of each pleading must be served on Jeffrey O. Moreno, Thompson Hine LLP, 1920 N Street, NW., Suite 800, Washington, DC 20036.

Board decisions and notices are available on our website at *WWW.STB.DOT.GOV.*

Dated: December 7, 2006.

By the Board, David M. Konschnik, Director, Office of Proceedings.

Vernon A. Williams,

Secretary.

[FR Doc. E6–21174 Filed 12–13–06; 8:45 am]

BILLING CODE 4915–01–P

[1] The verified notice of exemption was originally filed under the name UP Nevada Railroad LLC. However, the Union Pacific Railroad Company objected to this name as a violation of its trademarks. Accordingly, by letters filed November 20, and November 22, 2006, counsel addressed issues relating to the identity and name of the Applicant in this proceeding and in the latter letter, requested that Nevada Pacific Railroad Corporation be substituted as the Applicant.

[2] This line was the subject of a notice of exemption that, according to the current verified notice, was never consummated. *See Tonopah & Tidewater Railroad Co.—Lease and Operation Exemption—Pan Western Corporation,* STB Finance Docket No. 34547 (STB served Sept. 30, 2004).

DEPARTMENT OF THE TREASURY

Internal Revenue Service

Open Meeting of the Area 5 Taxpayer Advocacy Panel (Including the States of Iowa, Kansas, Minnesota, Missouri, Nebraska, Oklahoma, and Texas)

AGENCY: Internal Revenue Service (IRS), Treasury.

ACTION: Notice.

SUMMARY: An open meeting of the Area 5 Taxpayer Advocacy Panel will be conducted. The Taxpayer Advocacy Panel is soliciting public comment, ideas, and suggestions on improving customer service at the Internal Revenue Service.

DATES: The meeting will be held Tuesday, January 9, 2007, at 9:30 a.m. Central Time.

FOR FURTHER INFORMATION CONTACT: Mary Ann Delzer at 1–888–912–1227, or (414) 231–2360.

SUPPLEMENTARY INFORMATION: Notice is hereby given pursuant to Section 10(a)(2) of the Federal Advisory Committee Act, 5 U.S.C. App. (1988) that a meeting of the Area 5 Taxpayer Advocacy Panel will be held Tuesday, January 9, 2007, at 9:30 a.m. Central Time via a telephone conference call. You can submit written comments to the panel by faxing to (414) 231–2363, or by mail to Taxpayer Advocacy Panel, Stop1006MIL, PO Box 3205, Milwaukee, WI 53201, or you can contact us at *http://www.improveirs.org.* This meeting is not required to be open to the public, but because we are always interested in community input, we will accept public comments. Please contact Mary Ann Delzer at 1–888–912–1227 or (414) 231–2360 for additional information.

The agenda will include the following: Various IRS issues

Dated: December 7, 2006.

John Fay,

Acting Director, Taxpayer Advocacy Panel.

[FR Doc. E6–21227 Filed 12–13–06; 8:45 am]

BILLING CODE 4830–01–P

DEPARTMENT OF THE TREASURY

Internal Revenue Service

Open Meeting of the Area 7 Taxpayer Advocacy Panel (Including the States of Alaska, California, Hawaii, and Nevada)

AGENCY: Internal Revenue Service (IRS), Treasury.

ACTION: Notice.

SUMMARY: An open meeting of the Area 7 committee of the Taxpayer Advocacy Panel will be conducted (via teleconference). The Taxpayer Advocacy Panel (TAP) is soliciting public comments, ideas, and suggestions on improving customer service at the Internal Revenue Service. The TAP will use citizen input to make recommendations to the Internal Revenue Service.

DATES: The meeting will be held Wednesday January 17, 2007.

FOR FURTHER INFORMATION CONTACT: Janice Spinks at 1–888–912–1227, or 206–220–6096.

SUPPLEMENTARY INFORMATION: Notice is hereby given pursuant to Section 10(a)(2) of the Federal Advisory Committee Act, 5 U.S.C. App. (1988) that an open meeting of the Area 7 Taxpayer Advocacy Panel will be held Wednesday, January 17, 2007, from 2 p.m. Pacific Time to 3:30 p.m. Pacific Time via a telephone conference call.

The public is invited to make oral comments. Individual comments will be limited to 5 minutes. If you would like to have the TAP consider a written statement, please call 1–888–912–1227 or 206–220–6096, or write to Janice Spinks, TAP Office, 915 2nd Avenue, MS W–406, Seattle, WA 98174 or you can contact us at *http://www.improveirs.org.* Due to limited conference lines, notification of intent to participate in the telephone conference call meeting must be made with Janice Spinks. Miss Spinks can be reached at 1–888–912–1227 or 206–220–6096.

The agenda will include the following: Various IRS issues.

Dated: December 7, 2006.

John Fay,

Acting Director, Taxpayer Advocacy Panel.

[FR Doc. E6–21229 Filed 12–13–06; 8:45 am]

BILLING CODE 4830–01–P

DEPARTMENT OF THE TREASURY

Internal Revenue Service

Open Meeting of the Area 3 Taxpayer Advocacy Panel (Including the States of Florida, Georgia, Alabama, Mississippi, Louisiana, Arkansas, and the Territory of Puerto Rico)

AGENCY: Internal Revenue Service (IRS), Treasury.

ACTION: Notice.

SUMMARY: An open meeting of the Area 3 Taxpayer Advocacy Panel will be conducted (via teleconference). The Taxpayer Advocacy Panel is soliciting public comments, ideas, and suggestions on improving customer service at the Internal Revenue Service.

DATES: The meeting will be held Tuesday, January 16, 2007, from 11:30 a.m. ET.

FOR FURTHER INFORMATION CONTACT: Sallie Chavez at 1–888–912–1227, or 954–423–7979.

SUPPLEMENTARY INFORMATION: Notice is hereby given pursuant to section 10(a)(2) of the Federal Advisory Committee Act, 5 U.S.C. App. (1988) that an open meeting of the Area 3 Taxpayer Advocacy Panel will be held Tuesday, January 16, 2007, from 11:30 a.m. ET via a telephone conference call. If you would like to have the TAP consider a written statement, please call 1–888–912–1227 or 954–423–7979, or write Sallie Chavez, TAP Office, 1000 South Pine Island Rd., Suite 340, Plantation, FL 33324. Due to limited conference lines, notification of intent to participate in the telephone conference call meeting must be made with Sallie Chavez. Ms. Chavez can be reached at 1–888–912–1227 or 954–423–7979, or post comments to the Web site: *http://www.improveirs.org.* The agenda will include: Various IRS issues.

Dated: December 7, 2006.

John Fay,

Acting Director, Taxpayer Advocacy Panel.

[FR Doc. E6–21230 Filed 12–13–06; 8:45 am]

BILLING CODE 4830–01–P

DEPARTMENT OF THE TREASURY

Internal Revenue Service

Open Meeting of the Area 4 Taxpayer Advocacy Panel (Including the States of Illinois, Indiana, Kentucky, Michigan, Ohio, Tennessee, and Wisconsin)

AGENCY: Internal Revenue Service (IRS), Treasury.

ACTION: Notice.

SUMMARY: An open meeting of the Area 4 Taxpayer Advocacy Panel will be conducted (via teleconference). The Taxpayer Advocacy Panel is soliciting public comment, ideas, and suggestions on improving customer service at the Internal Revenue Service.

DATES: The meeting will be held Tuesday, January 16, 2007, at 10 a.m., Central Time.

FOR FURTHER INFORMATION CONTACT: Mary Ann Delzer at 1–888–912–1227, or (414) 231–2360.

SUPPLEMENTARY INFORMATION: Notice is hereby given pursuant to Section 10(a)(2) of the Federal Advisory Committee Act, 5 U.S.C. App. (1988) that a meeting of the Area 4 Taxpayer Advocacy Panel will be held Tuesday, January 16, 2007, at 10 a.m., Central Time via a telephone conference call. You can submit written comments to the panel by faxing the comments to (414) 231–2363, or by mail to Taxpayer Advocacy Panel, Stop 1006MIL, PO Box 3205, Milwaukee, WI 53201, or you can contact us at *www.improveirs.org.* This meeting is not required to be open to the public, but because we are always interested in community input we will accept public comments. Please contact Mary Ann Delzer at 1–888–912–1227 or (414) 231–2360 for dial-in information.

The agenda will include the following: Various IRS issues.

Dated: December 7, 2006.

John Fay,

Acting Director, Taxpayer Advocacy Panel.

[FR Doc. E6–21231 Filed 12–13–06; 8:45 am]

BILLING CODE 4830–01–P

DEPARTMENT OF THE TREASURY

Internal Revenue Service

Open Meeting of the Area 2 Taxpayer Advocacy Panel (Including the States of Delaware, North Carolina, South Carolina, New Jersey, Maryland, Pennsylvania, Virginia, West Virginia and the District of Columbia)

AGENCY: Internal Revenue Service (IRS), Treasury.

ACTION: Notice.

SUMMARY: An open meeting of the Area 2 Taxpayer Advocacy Panel will be conducted (via teleconference). The Taxpayer Advocacy Panel is soliciting public comments, ideas, and suggestions on improving customer service at the Internal Revenue Service.

DATES: The meeting will be held Wednesday, January 17, 2007, at 2:30 p.m. ET.

FOR FURTHER INFORMATION CONTACT: Inez E. De Jesus at 1–888–912–1227, or 954–423–7977.

SUPPLEMENTARY INFORMATION: Notice is hereby given pursuant to section 10(a)(2) of the Federal Advisory Committee Act, 5 U.S.C. App. (1988) that an open meeting of the Area 2 Taxpayer Advocacy Panel will be held Wednesday, January 17, 2007, at 2:30 p.m. ET via a telephone conference call. If you would like to have the TAP consider a written statement, please call 1–888–912–1227 or 954–423–7977, or write Inez E. De Jesus, TAP Office, 1000 South Pine Island Rd., Suite 340, Plantation, FL 33324. Due to limited conference lines, notification of intent to participate in the telephone conference call meeting must be made with Inez E. De Jesus. Ms. De Jesus can be reached at 1–888–912–1227 or 954–423–7977, or post comments to the Web site: *http://www.improveirs.org.*

The agenda will include the following: Various IRS issues.

Dated: December 7, 2006.

John Fay,

Acting Director, Taxpayer Advocacy Panel.

[FR Doc. E6–21233 Filed 12–13–06; 8:45 am]

BILLING CODE 4830–01–P

DEPARTMENT OF THE TREASURY

Office of Thrift Supervision

[No. 2006–50]

Concentrations in Commercial Real Estate Lending, Sound Risk Management Practices

AGENCY: The Office of Thrift Supervision, Treasury (OTS).

ACTION: Final guidance.

SUMMARY: OTS is issuing final guidance: Concentrations in Commercial Real Estate (CRE) Lending, Sound Risk Management Practices (guidance). OTS developed this Guidance to clarify that institutions actively engaged in CRE lending should assess their concentration risk and implement appropriate risk management policies and procedures to identify, monitor, manage, and control their concentration risks.

EFFECTIVE DATE: The final Guidance is effective December 14, 2006.

FOR FURTHER INFORMATION CONTACT: *OTS:* William Magrini, Senior Project Manger, (202) 906–5744, or Fred Phillips-Patrick, Director, Credit Policy, (202) 906–7295.

SUPPLEMENTARY INFORMATION:

I. Background

OTS has observed that some institutions have high and increasing concentrations of CRE loans on their balance sheets and is concerned that these concentrations may cause some savings associations to be more vulnerable to cyclical CRE markets. In the past, concentrations in CRE lending coupled with weak loan underwriting and depressed CRE markets contributed to significant credit losses in the banking system. While underwriting standards are generally stronger than during previous CRE cycles, OTS has observed an increasing trend in the number of institutions with concentrations in CRE loans. These concentrations could cause institutions to be more vulnerable to cyclical CRE markets. Moreover, OTS believes an institution's risk management practices should be commensurate with its CRE concentrations.

In response to those concerns, OTS, together with the Office of the Comptroller of the Currency (OCC), The Federal Reserve Board (FRB), and the Federal Deposit Insurance Corporation (FDIC) (collectively ''Agencies'') published for notice and comment, proposed interagency guidance, ''Concentrations in Commercial Real Estate Lending, Sound Risk Management Practices,'' 71 FR 2302 (January 13, 2006).

The Agencies sought public comment on all aspects of the proposed guidance. In particular, the Agencies requested comment on the scope of the definition of CRE and on the appropriateness of using thresholds for determining elevated concentration risk. For the purposes of the proposed guidance, the Agencies focused on concentrations in those types of CRE loans that are particularly vulnerable to cyclical CRE markets. These include CRE exposures where the source of repayment primarily depends upon rental income or the sale, refinancing, or permanent financing of the property. Loans to REITs and unsecured loans to developers that closely correlate to the inherent risk in CRE markets would also have been considered CRE loans for purposes of the proposed guidance.

The proposed guidance set forth thresholds for assessing an institution's CRE concentrations that would require heightened risk management practices. The proposed Guidance also reminded institutions with CRE concentrations that they should hold capital higher than regulatory minimums and commensurate with the level of risk in their CRE lending portfolios. In assessing the adequacy of an institution's capital, the proposed Guidance stated that the Agencies would take into account the level of inherent risk in its CRE portfolio and the quality of its risk management practices.

Collectively, the Agencies received approximately 4,400 comment letters from financial institutions, their trade associations, state banking regulators, and other members of the public. OTS received approximately 1,300 comment letters. The vast majority of commenters were opposed to the Guidance as proposed.

II. Overview of Public Comments

The vast majority of commenters expressed strong opposition to the proposed CRE concentration Guidance and stated that the agencies should address the issue of concentration risk on a case-by-case basis as part of the examination process. Commenters stated that existing regulations and Guidance are sufficient to address the agencies' concerns regarding CRE concentration risk and the adequacy of an institution's risk management practices and capital. Many commenters asked that the Agencies either substantially revise the proposed Guidance or withdraw it.

Specifically, commenters expressed concern about the following areas of the proposal:

- That the definition of CRE inappropriately includes multifamily and one-to four-family construction loans;
- That the thresholds of 100 percent of the institution's capital for construction loans and 300 percent of capital for aggregate CRE loans would be viewed as limits; and
- That all institutions would be required to adopt intense risk management systems, regardless of their level of CRE lending.

Several commenters asserted that today's lending environment is significantly different than the late 1980s and early 1990s when banks and thrifts suffered losses from their real estate lending activities due to weak underwriting standards and risk management practices. Commenters stated that the underwriting practices of banks and thrifts are now much stronger, and capital levels are higher.

Comments from community banks raised serious opposition to the proposed Guidance and suggested that the proposed Guidance would discourage community banks from engaging in CRE. These commenters also noted that if community banks were forced to reduce their CRE lending, it could create a downturn in the economy and lead to systemic problems greater than any potential risks in CRE loans.

While smaller institutions acknowledge that many community banks and small thrifts have concentrations in CRE loans, they contend that there are few other lending opportunities in which community banks can successfully compete against larger financial institutions. Community banks commented that secured real estate lending has been their ''bread and butter'' business and, if required to reduce their CRE lending activity, they would have to look to other types of lending, which are historically more risky. Moreover, these commenters noted that community-based institutions have in depth knowledge of their local communities and markets, which affords them a significant advantage when competing for CRE loan business. Community banks also noted that their lending opportunities have diminished due to competition from other types of financial institutions, such as finance companies, Farm Credit banks, and credit unions.

The following summarizes the final Guidance and how OTS addressed specific aspects of commenter concerns about the proposed Guidance.

III. Final Guidance

Significant comments on the specific provisions of the proposed guidance, OTS's responses, and changes to the proposed guidance are discussed as follows.

Scope of the Guidance

The proposed guidance set forth two benchmarks for identifying institutions with CRE loan concentrations that may

warrant greater supervisory scrutiny. Specifically, if loans for construction, land development, and other land exceed 100 percent of total capital, the institution would be considered to have a CRE concentration. Also, if loans secured by multi-family and non-farm nonresidential property, where the primary source of repayment is derived from rental income or the proceeds of the sale, refinancing, or permanent financing, combined with construction, development, and land loans, exceed 300 percent of total capital, the institution would be considered to have a CRE concentration. Institutions with concentrations would be expected to employ heightened risk management practices.

General Comments on the Benchmarks

Most commenters disagreed with the establishment of these benchmarks. Many of the commenters questioned the basis for the benchmarks and asserted that a rigid, arbitrary concentration test should be eliminated. By establishing CRE concentration benchmarks, many commenters noted that examiners would perceive such benchmarks as *de facto* limits on an institution's CRE lending activity.

Commenters noted that the proposed benchmarks did not recognize the different segments in an institution's CRE portfolio and treated all CRE loans as having equal risk. A commenter noted that a concentration test cannot reflect the distinct risk profile within an institution's loan portfolio and that the risk profile is a function of many intangibles, including the institution's risk tolerance, portfolio diversification, the prevalence of guarantees and secondary collateral, and the condition of the regional economy.

Commenters noted that the benchmarks would not accurately identify banks and thrifts that might be adversely affected by their CRE portfolio in an economic downturn. One commenter noted that proposed benchmarks mixed together real estate loans with vastly different potential for loss and, therefore, would fail to accomplish the Agencies' goal of identifying institutions that might be affected by a downturn.

Several commenters noted that the benchmarks did not consider the loan-to-value (LTV) ratio of a CRE loan as an indication of risk and that interagency real estate lending standards exist that limit high LTV loans.[1] A commenter noted that there is a vast difference in risk between a loan conservatively underwritten where the borrower has a large investment at stake and a loan offering overly generous terms where the borrower has little to lose if the project should fail. One commenter stated that a bank or thrift with no high LTV CRE loans but with a concentration in CRE loans would be presumed to have a higher risk CRE portfolio than a bank or thrift with a lower concentration but with a significant number of high LTV CRE loans.

Commenters stated that, if the agencies were to adopt the guidance with benchmarks, the concentration test should consider the institution's asset size, geographic dispersion of its loans, CRE product concentrations, its underwriting standards, and lending experience. Further, a commenter stated that the guidance should be focused on those types of speculative CRE loans that are most susceptible to economic downturn.

The 100 percent Construction Benchmark: Those commenters expressing an opinion on the 100 percent construction benchmark found the benchmark too low, and several suggested that it should be at least 200 percent. Several commenters recommended that presold one-to four-family residential construction loans, commercial construction loans for owner-occupied businesses, and commercial construction loans with firm takeouts should be specifically excluded as such loans are significantly less risky. One commenter noted that construction loans on presold versus speculative residential properties should be treated differently as presold properties have construction risk but not real estate market risk, which was the concern of the Agencies.

The 300 percent CRE Benchmark: Commenters asserted that 300 percent aggregate concentration benchmark was too low and that a benchmark in the range of 400 to 600 percent of capital would be more appropriate. Commenters also noted that the benchmark mixed together all types of CRE loans that have vastly different potential for loss, and that an assessment of concentration risk based on the Agencies' benchmark did not consider the risk characteristics of the subcategories of CRE loans. One commenter noted that the proposal did not differentiate the risks posed by a loan on a speculative office building versus a fully occupied apartment building.

To address commenter concerns, OTS revised the focus of this final guidance. Instead of using numerical thresholds to identify institutions with CRE concentrations, the Guidance now states that all institutions actively engaged in CRE lending should assess their own CRE concentration risk. Accordingly, institutions should implement sound risk management procedures commensurate with the size and risks of their CRE portfolios and also establish internal concentration thresholds for internal reporting and monitoring.

For the reasons described herein, there are no numerical thresholds or screens in this Guidance. OTS monitors compliance with statutory lending limits, CRE, and other lending activity in off-site analyses of Thrift Financial Reports as well as in the scope of OTS's risk-focused examinations. Institutions that have recently experienced rapid growth in CRE lending or have a notable exposure to a specific type of CRE may be identified for closer review. Examiners will determine whether savings associations actively engaged in CRE lending have performed an assessment of their CRE credit and concentration risks and have implemented appropriate risk management systems and controls to mitigate such risks.

The Definition of CRE Loans

For the purposes of the proposed guidance, the Agencies focused on CRE loans that may expose an institution to unanticipated earnings and capital volatility due to adverse changes in the general CRE market. This includes CRE exposures where the primary source of repayment is derived from rental income associated with the property or the proceeds of the sale, refinancing, or permanent financing of the property. Loans to REITs and unsecured loans to developers that closely correlate to the inherent risk in the CRE market would also be considered CRE loans for purposes of the proposed guidance. However, loans secured by owner-occupied properties where less than 50 percent of the source of repayment comes from third party, non-affiliated, rental income were excluded from the CRE definition as the risk profile of these loans is less influenced by the condition of the general CRE market.

Commenters asked for clarification on the scope of the definition of CRE loans. Several commenters noted that the proposed definition combined several different types of CRE loans and ignored the very different risk profiles of these loans. Many of the commenters found

[1] Interagency Guidelines for Real Estate Lending Policies (Appendix to OTS 12 CFR 560.100–101) state that the aggregate amount of commercial, agricultural, multifamily, or other non-one- to four-family loans should not exceed 30 percent of an institution's total capital if they exceed supervisory loan-to-value limits.

the proposed definition too broad and grouped together loans on stabilized properties with those under development into the same risk category.

Commenters raised questions as to whether the agencies intended to include in the CRE loan definition loans secured by motels, hotels, mini-storage warehouse facilities, and apartment complexes where the primary source of repayment is rental or lease income. One commenter asked for clarification as to whether the CRE loan definition included loans on small-to medium-sized business properties where the borrower leased the property to a business entity in which the borrower held an ownership interest. The commenter noted that a narrow interpretation of the definition of owner-occupied would include these types of loans in the scope of the CRE definition even though such loans exhibit the same risk profile as an owner-occupied property.

A number of commenters contended that loans on certain types of CRE properties should not be considered CRE loans for purposes of the proposed guidance, including:

Presold One- to Four-Family Residential Construction Loans: Commenters recommended that the proposed guidance should not cover residential construction loans where homes have been sold to qualified borrowers prior to the start of the construction. These commenters argued that presold one- to four-family residential construction loans carry far less risk than speculative home construction loans as the homeowners are known and have had their credit evaluated as being satisfactory prior to the commencement of construction. Commenters noted that their rationale for excluding presold one- to four-family residential construction is consistent with the proposal's exclusion of CRE loans on owner-occupied properties. As another indicator of risk, commenters noted that presold one- to four-family residential construction loans were subject to only a 50 percent risk weight under the current risk-based capital rules.

Multifamily Residential Loans: Commenters recommended that multifamily construction loans with firm takeouts or loans on completed multifamily properties, including assisted living complexes, with established rent rolls be excluded from the proposed CRE definition. In making this recommendation, commenters contend that multifamily residential loans have much less risk than CRE loans that have no firm takeout or established cash flow history. One commenter noted that in an economic downturn, multifamily loan performance tends to move counter-cyclically to other types of real estate, such as single-family mortgages, because potential homebuyers are more likely to rent than to purchase a home. Another commenter noted that over the last 20 years, institutions have incurred minimal losses on multifamily loans and attributed this performance to strong underwriting and stability in rental properties.

Treatment of REITs: The commenter, representing REITS, sought clarification as to whether the proposed guidance would apply to both secured and unsecured loans to REITs. This commenter asserted that unsecured loans to REITs should not be considered a CRE loan for purposes of the proposed guidance as the risk of an unsecured loan to a REIT is mitigated by diversified sources of repayment because the rental income from one property or even a collection of properties is not the only source of revenue available to a REIT to repay the unsecured loan. Further, the commenter argued that, in general, a loan to a large, well-diversified equity REIT (whether secured or unsecured) does not carry the same credit risk as a secured loan on a single asset and that the proposed guidance should allow a lending institution to consider the REIT's property diversification and overall financial strength. Therefore, the commenter sought clarification that a bank or thrift need not treat a REIT as merely a collection of single properties, but rather a geographically and product diverse operating company with a diversified revenue stream.

Reliance on the Call and Thrift Financial Reports: Commenters noted that the identification of CRE loans in the current Call Reports and Thrift Financial Reports did not correspond to the scope of the CRE definition in the proposed guidance and did not constitute an accurate measurement of the volume of an institution's CRE loans that would be vulnerable to cyclical CRE markets. Commenters did acknowledge that the revisions to the Call Reports and Thrift Financial Reports, effective March 2007, would address the separation of CRE loans for owner-occupied properties.

While OTS agrees that risks vary among the various CRE property types, geographical area, and lending standards, it is important to note that the definition only serves as a high level indicator of possible concentration risk. Moreover, because OTS removed the proposed thresholds and numerical screens that would have mandated institutions to adopt more stringent risk management practices, maintaining the proposed definition will not trigger additional or unwarranted risk management if concentration risk is minimal.

Appropriateness of the Risk Management Practices

The proposed guidance reinforces sound risk management practices for a bank or thrift with a concentration in CRE lending. The proposal reminds an institution's board of directors and management of their ultimate responsibility for the level of risk undertaken by their institution and reinforces and builds upon existing real estate lending standards, regulations, and guidelines. The proposed guidance describes key risk management elements for an institution's CRE lending activity with a particular emphasis on those components of the risk management process that are more generally applicable to an institution with a CRE concentration. The proposed risk management expectations are discussed along the following frameworks: board and management oversight, strategic planning, underwriting, risk assessment, monitoring of CRE loans, portfolio risk management, management information systems, market analysis, and stress testing. In the proposal, the agencies acknowledged that the sophistication of risk management practices should be consistent with the size and complexity of the institution's CRE portfolio.

Commenters noted that the proposed risk management principles have been in effect for some time and are generally acknowledged as prudent industry standards that should be used by an institution engaged in CRE lending. While there was general agreement with the appropriateness of the risk management principles, commenters noted that the agencies should consider an institution's size and complexity of its lending activity in assessing the adequacy of its risk management practices. The majority of commenters noted that the recommended practices, particularly with regard to the management information systems and portfolio stress testing, would place a great deal of additional burden on smaller institutions at a time when they are already faced with Bank Secrecy Act and information security compliance requirements.

To address commenter concern, OTS clarified that after performing their own self-assessment of CRE concentration risk, institutions would be expected to implement risk management policies and procedures appropriate for the size,

complexity, and risk of their CRE exposure.

Capital Adequacy and ALLL

The proposed guidance noted that institutions should hold capital commensurate with the level and nature of the risks to which they are exposed and that institutions with high CRE concentrations would be expected to operate well above regulatory capital minimums. Further, as part of internal capital analysis, the proposed guidance reminded institutions that the results of any stress testing and quantitative and qualitative analysis should be used to assess the adequacy of capital. The proposed guidance also reminded institutions that they should consider CRE concentrations in their assessment of the adequacy of allowance for loan and lease losses (ALLL), consistent with existing interagency guidance.

Overall, commenters found the proposed capital discussion too restrictive and that it did not take into account the institution's lending and risk management practices. Moreover, commenters asserted that many institutions already hold capital at levels above minimum standards and should not be required to raise additional capital simply because their CRE concentrations exceed a threshold. There was also concern expressed that the proposal would give examiners the ability to arbitrarily assess additional capital requirements solely due to a high concentration. Comments from smaller institutions noted that the proposal would unfairly burden them as they do not have the opportunity to raise capital or diversify their portfolio to the extent to that large regional banks or thrifts are able.

Commenters called into question the consistency of the proposed guidance with current risk-based capital requirements that assess capital adequacy based on the risk inherent in an asset class and tie capital requirements to loan-to-value ratios. Several commenters suggested that any discussion on capital adequacy issues arising from CRE lending should be best addressed within the context of the Agencies' risk-based capital framework, which several commenters noted is currently being revised by the agencies.

Commenters noted that allowance for loan and lease losses is another means of protection for an institution and, therefore, should be considered in determining the effects of potential concentrations on the adequacy of capital. Further, commenters viewed the proposed guidance as imposing arbitrary tests to determine reserves that, based on the amount of CRE loans in an institution's CRE portfolio, may not be a true indicator of risk.

As provided in the proposed guidance, the final Guidance states that such institutions should also have in place capital levels appropriate to the risk associated with CRE concentrations. To address commenter concerns, OTS revised the capital section of the guidance to make it clear that most institutions with CRE meet current capital expectations so additional capital will not be expected. In assessing the adequacy of an institution's capital, the Guidance states that OTS will take into account the level of inherent risk in its CRE portfolio and the quality of its risk management practices.

The final Guidance does not have a separate section concerning ALLL. The language in the Guidance, however, serves as a reminder that ALLL levels for CRE loans should reflect the collectability of loans in the CRE portfolio. This is a requirement under generally accepted accounting principles and interagency ALLL policy.

The Agencies worked together to develop the final guidance and made a number of changes to the proposed guidance to respond to commenters' concerns and provide additional clarity to address commenter concerns. The OCC, FRB, and FDIC are concurrently issuing separate guidance for banks. OTS is issuing separate guidance for savings associations that is similar to the guidance issued for banks. The primary focus of this guidance is to remind savings associations of the importance of performing an assessment of their CRE concentration risk and the need to implement appropriate risk management procedures to monitor and control such risks.

Unlike statutory investment requirements for other federal financial institutions, the Home Owner's Loan Act sets various limits on certain loans and investments made by savings associations [12 U.S.C. 1464 (5)(c)(2)(B)]. This includes a 400 percent of capital statutory investment limit on loans secured by nonresidential real estate. As a result, OTS engages in extensive monitoring to determine when savings associations approach the legal lending limit for these and other loans subject to HOLA investment limits. Accordingly, given the statutory investment limit applicable to savings associations, and the significantly different risk characteristics of various types of CRE, OTS's guidance does not include numerical or supervisory screens.

V. Text of Final Guidance

The text of the OTS Guidance on Concentrations in Commercial Real Estate Lending, Sound Risk Management Practices follows:

Concentrations in Commercial Real Estate Lending, Sound Risk Management Practices

Purpose

The Office of Thrift Supervision (OTS) is issuing this Guidance to address concentrations of commercial real estate (CRE) loans in savings associations. Concentrations of credit can add a dimension of risk that compounds the risk inherent in individual loans.

The Guidance reminds savings associations that strong risk management practices and appropriate levels of capital are essential elements of a sound CRE lending program, particularly when an institution maintains a concentration in CRE loans. The Guidance reinforces and enhances OTS's existing regulations and guidelines for real estate lending [2] and loan portfolio management. The Guidance does not establish specific CRE lending limits; rather, it seeks to promote sound risk management practices that will enable savings associations to continue to pursue CRE lending in a safe and sound manner.

Background

OTS recognizes that savings associations play a vital role in providing credit for business and real estate development. In the past, concentrations in CRE lending coupled with weak loan underwriting and depressed CRE markets contributed to significant credit losses in the banking system. While underwriting standards are generally stronger than during previous CRE cycles, there has been an increasing trend in the number of institutions with concentrations in CRE loans. These concentrations may make such institutions more vulnerable to cyclical CRE markets. Moreover, some institutions' risk management practices are not evolving with their increasing CRE concentrations. Therefore, this Guidance reminds savings associations with concentrations in CRE loans that their risk management practices and capital levels should be commensurate with the level and nature of the risks that concentrations pose.

[2] Refer to OTS's regulations on real estate lending standards and the *Interagency Guidelines for Real Estate Lending Policies:* 12 CFR 560.100–101 and the *Interagency Guidelines Establishing Standards for Safety and Soundness:* 12 CFR 570, appendix A.

Scope

In developing this Guidance, OTS recognized that different types of CRE lending present different levels of risk, and that consideration should be given to the lower risk profiles and historically superior performance of certain types of CRE, such as well-structured multifamily housing finance, when compared to others, such as speculative office space construction. As discussed under ''CRE Concentration Assessments,'' institutions are encouraged to segment their CRE portfolios to acknowledge these distinctions for risk management purposes.

This Guidance focuses on those CRE loans for which the cash flow from the real estate is the primary source of repayment rather than loans to a borrower for which real estate collateral is taken as a secondary source of repayment or through an abundance of caution. Thus, for purposes of this Guidance, CRE loans are those loans with risk profiles sensitive to the condition of the general CRE market (e.g., market demand, changes in capitalization rates, vacancy rates, or rents). CRE loans include land development and construction loans (including one-to four-family residential and commercial construction) and loans secured by raw land, multifamily property, and nonfarm nonresidential property where the primary or a significant source of repayment is derived from rental income associated with the property (that is, loans for which 50 percent or more of the source of repayment comes from third party, nonaffiliated, rental income) or the proceeds of the sale, refinancing, or permanent financing of the property. Loans secured by owner-occupied nonfarm nonresidential properties where the primary or significant source of repayment is the cash flow from the ongoing operations and activities conducted by the party, or affiliate of the party, who owns the property are excluded from the scope of this Guidance. Loans to Real Estate Investment Trusts (REITs) and unsecured loans to developers should also be considered CRE loans for purposes of this Guidance if their performance is closely linked to performance of CRE markets.

CRE Concentration Assessments

Credit concentrations are groups or classes of credit exposures that share common risk characteristics or sensitivities to economic, financial, or business developments. Therefore, savings associations with an accumulation of such exposures should be able to quantify the additional risk such credit concentrations may pose. Savings associations actively involved in CRE lending should also perform ongoing risk assessments to identify any changes in the risk of their CRE portfolios resulting from growth in the amount of their exposures or changes in underwriting standards or the economic environment. The risk assessment should identify potential concentration risk by stratifying the CRE portfolio into segments that have common risk characteristics or would be affected by similar external events. An institution's CRE portfolio stratification should be reasonable and supportable. The CRE portfolio should not be divided into multiple segments simply to avoid the appearance of concentration risk.

OTS recognizes that risk characteristics differ among property types of CRE loans. A manageable level of CRE concentration risk will vary by institution depending on the portfolio risk characteristics, the quality of risk management processes, and capital levels. Therefore, the Guidance does not establish a CRE concentration limit or an implication that any particular level is undesirable. Rather, the Guidance encourages savings associations to: identify and monitor credit concentrations and the additional risk that they may pose, establish internal concentration limits, and report all concentration risks to management and the board of directors on a periodic basis. Depending on the results of its internal risk assessment, the institution may need to enhance its risk management systems as described below.

Risk Management

The sophistication of a savings association's risk management processes should be appropriate to the size of the portfolio, as well as the level and nature of concentrations and the associated risk to the institution. Savings associations should address the following key elements in establishing a risk management framework that effectively identifies, monitors, and controls CRE concentration risk:

- Board and management oversight
- Portfolio management
- Management information systems
- Market analysis
- Credit underwriting standards
- Portfolio stress testing and sensitivity analysis
- Credit risk review function

Board and Management Oversight

An institution's board of directors has ultimate responsibility for the level of risk assumed by the institution, including both its credit and concentration risks. An institution's strategic plan should address the rationale for any CRE concentration in relation to its overall growth objectives, financial targets, and capital plan. In addition, OTS's real estate lending regulations require that each institution adopt and maintain a written policy that establishes appropriate limits and standards for all extensions of credit that are secured by liens on or interests in real estate, including CRE loans. Therefore, the board of directors or a designated committee thereof should:

- Establish policy guidelines and approve an overall CRE lending strategy regarding the level and nature of CRE concentration risk acceptable to the institution, including any binding commitments to particular borrowers or CRE property types.
- Ensure that management implements procedures and controls to effectively adhere to and monitor compliance with the institution's lending policies and strategies.
- Receive information that identifies and quantifies the nature and level of risk presented by the CRE concentration, including reports that describe changes in CRE market conditions in which the institution lends.
- Periodically review and approve CRE risk exposure limits and appropriate sublimits (for example, by nature of concentration) to conform to any changes in the institution's strategies and to respond to changes in market conditions.

Portfolio Management

Savings associations with CRE concentrations need to manage not only the risk of individual loans but also the additional portfolio risk that may arise from an overall exposure to a single economic risk factor. Even when individual CRE loans are prudently underwritten, concentrations of loans that are similarly affected by cyclical changes in the CRE market can expose an institution to an unacceptable level of risk if not properly managed. Management should regularly evaluate the degree of correlation between related real estate sectors and establish internal lending guidelines and concentration limits that control the institution's overall risk exposure.

In the presence of concentration risk, management should develop appropriate strategies for managing concentration levels, including a contingency plan to reduce concentrations or mitigate concentration risk in the event of adverse market

conditions. Loan participations, whole loan sales, and securitizations are a few examples of strategies for actively managing concentration levels without curtailing new originations. If the contingency plan includes selling or securitizing CRE loans, management should assess the marketability of the portfolio. This should include an evaluation of the institution's ability to access the secondary market and a comparison of its underwriting standards with those that exist in the secondary market.

Management Information Systems

A strong management information system (MIS) is key to effective portfolio management. The sophistication of MIS will necessarily vary with the risk associated with concentrations and the complexity of the institution. MIS should provide management with sufficient information to identify, measure, monitor, and manage CRE concentration risk. This includes meaningful information on CRE portfolio characteristics that is relevant to the institution's lending strategy, underwriting standards, and risk tolerances. An institution should periodically assess the adequacy of MIS in light of growth in CRE loans and changes in its risk profile.

Savings associations are encouraged to stratify the CRE portfolio by property type, geographic market, tenant concentrations, tenant industries, developer concentrations, and risk rating. Other useful stratifications may include loan structure (for example, fixed rate or adjustable), loan purpose (for example, construction, short-term, or permanent), loan-to-value limits, debt service coverage, policy exceptions on newly underwritten credit facilities, and affiliated loans (for example, loans to tenants). Another useful stratification may be a determination if property is considered owner-occupied. If 50 percent or more of the property's rental income comes from third party, non-affiliated, rental income, the property would not be considered owner-occupied.[3] An institution should also be able to identify and aggregate exposures to a borrower, including its credit exposure relating to derivatives.

Management reporting should be timely and in a format that clearly indicates changes in the portfolio's risk profile, including risk-rating migrations. In addition, management reporting should include a well-defined process through which management reviews and evaluates concentration and risk management reports, as well as special ad hoc analyses in response to potential market events that could affect the CRE loan portfolio.

Market Analysis

Market analysis should provide the institution's management and the board of directors with information to assess whether its CRE lending strategy and policies continue to be appropriate in light of changes in CRE market conditions. An institution should perform periodic market analyses for the various property types and geographic markets represented in its portfolio.

Market analysis is particularly important as an institution considers decisions about entering new markets, pursuing new lending activities or expanding in existing markets. Market information may also be useful for developing sensitivity analysis or stress tests to assess portfolio risk.

Sources of market information may include published research data, real estate appraisers and agents, information maintained by the property taxing authority, local contractors, builders, investors, and community development groups. The sophistication of an institution's analysis will vary by its market share and exposure as well as the availability of market data. While an institution operating in non-metropolitan markets may have access to fewer sources of detailed market data than an institution operating in large, metropolitan markets, an institution should be able to demonstrate that it has an understanding of the economic and business factors influencing its lending markets.

Credit Underwriting Standards

An institution's lending policies should reflect the level of risk that is acceptable to its board of directors and should provide clear and measurable underwriting standards that enable the institution's lending staff to evaluate all relevant credit factors. When an institution has a CRE concentration, the importance of sound lending policies becomes even more critical and should consider both internal and external factors, such as its market position, historical experience, present and prospective trade area, probable future loan and funding trends, staff capabilities, and technology resources. Consistent with interagency real estate lending guidelines, CRE lending policies should address the following underwriting standards:

- Maximum loan amount by type of property
- Loan terms
- Pricing structures
- Collateral valuation[4]
- LTV limits by property type
- Requirements for feasibility studies and sensitivity analysis or stress testing
- Minimum requirements for initial investment and maintenance of hard equity by the borrower
- Minimum standards for borrower net worth, property cash flow, and debt service coverage for the property

An institution's lending policies should permit exceptions to underwriting standards only on a limited basis. When an institution does permit an exception, it should document how the transaction does not conform to the institution's policy or underwriting standards, obtain appropriate management approvals, and provide reports to the board of directors or designated committee detailing the number, nature, justifications, and trends for exceptions. Exceptions to both the institution's internal lending standards and interagency supervisory LTV limits[5] should be monitored and reported on a regular basis. Further, savings associations should analyze trends in exceptions to ensure that risk remains within the institution's established risk tolerance limits.

Credit analysis should reflect both the borrower's overall creditworthiness and project specific considerations as appropriate. In addition, for development and construction loans, the institution should have policies and procedures governing loan disbursements to ensure that the institution's minimum equity requirements by the borrower are maintained throughout the development and construction periods. Prudent controls should include an inspection process, documentation on construction progress, tracking pre-sold units, pre-leasing activity, and exception monitoring and reporting.

Portfolio Stress Testing and Sensitivity Analysis

An institution with CRE concentration risk should perform portfolio level stress tests or sensitivity analysis to quantify the impact of changing economic conditions on asset quality, earnings, and capital. Further, an institution should consider the

[3] The determination as to whether a property is considered ''owner-occupied'' should be made upon origination or purchase of the loan. This is consistent with the new reporting items adopted by OTS in the revisions to the Thrift Financial Report published December 1, 2006, 71 FR 69619.

[4] Refer to OTS's appraisal regulations: 12 CFR part 564.

[5] The Interagency Guidelines for Real Estate Lending (12 CFR 560.100–101) state that loans exceeding the supervisory loan-to-value (LTV) guidelines should be recorded in the institution's records and reported to the board at least quarterly.

sensitivity of portfolio segments with common risk characteristics to potential market conditions. The sophistication of stress testing practices and sensitivity analysis should be consistent with the complexity of the institution and risk characteristics of its CRE loan portfolio. For example, well-margined and seasoned performing loans on multifamily housing normally would require significantly less robust stress testing than most acquisition, development, and construction loans.

Portfolio stress testing and sensitivity analysis may not necessarily require the use of a sophisticated portfolio model. Depending on the risk characteristics of the CRE portfolio, stress testing may be as simple as analyzing the potential effect of stressed loss rates on the CRE portfolio, capital, and earnings. The analysis should focus on the more vulnerable segments of an institution's CRE portfolio, taking into consideration the prevailing market environment and the institution's business strategy.

Credit Risk Review Function

A strong credit risk review function is critical for an institution's self-assessment of emerging risks. An effective, accurate, and timely risk-rating system provides a foundation for the institution's credit risk review function to assess credit quality and, ultimately, to identify problem loans. Risk ratings should also be risk sensitive, objective, and appropriate for the types of CRE loans underwritten by the institution. Further, risk ratings should be regularly reviewed for appropriateness.

Supervisory Oversight

As part of its ongoing supervisory monitoring processes, OTS uses certain criteria to identify savings associations that may have CRE concentration risk. These include savings associations that:

- Are approaching their HOLA investment limits.
- Have experienced rapid growth in CRE lending.
- Have notable exposure to a specific type of or high-risk CRE.
- Were subject to supervisory concern over CRE lending during preceding examinations.
- Have experienced significant levels of delinquencies or charge-offs in their CRE portfolio.

A savings association that exhibits any of the risk elements described above may receive further supervisory analysis to ascertain whether its internal concentration risk assessment and resulting risk management practices are commensurate with of the level and nature of its CRE exposure.

OTS will use the above criteria as a preliminary step to identify savings associations that may have CRE concentration risk.[6] Because regulatory reports capture a broad range of CRE loans with varying risk characteristics, the supervisory monitoring criteria are intended to serve as high-level indicators to identify savings associations potentially exposed to CRE concentration risk.

For some types of CRE exposures, concentration risk may be present well before the statutory limit is reached. The statutory investment limit of 400 percent of total capital for non-residential real estate should not be considered a ''safe harbor'' for savings associations with smaller commercial real estate exposures. OTS expects all savings associations that are actively engaged in CRE lending to assess their concentration risk and maintain adequate risk management policies and procedures to control such risks.

Evaluation of CRE Concentration Risk

The effectiveness of an institution's risk management practices will be a key component of the supervisory evaluation of its CRE concentration risk. Examiners will evaluate an institution's internal CRE analysis and engage in a dialogue with the institution's management to assess CRE exposure levels and risk management practices. Savings associations that have experienced recent, significant growth in CRE lending will receive closer supervisory review than those that have demonstrated a successful track record of managing the risks in CRE concentrations.

In evaluating the level of risk, OTS will consider the institution's own analysis of its CRE portfolio including the presence of mitigating factors, such as:

- Portfolio diversification across property types
- Geographic dispersion of CRE loans
- Portfolio performance
- Underwriting standards
- Level of pre-sold units or other types of take-out commitments on construction loans
- Portfolio liquidity (ability to sell or securitize exposures on the secondary market)

Assessment of Capital Adequacy

OTS's existing capital adequacy guidelines note that an institution should hold capital commensurate with the level and nature of the risks to which it is exposed. Accordingly, savings associations with CRE concentration risks are reminded that their capital levels should be commensurate with the risk profile of their CRE portfolios that includes both credit and concentration risks. In assessing the adequacy of an institution's capital, OTS will consider the level and nature of inherent risk in the CRE portfolio as well as management expertise, historical performance, underwriting standards, risk management practices, and market conditions. Most savings associations currently meet this expectation and will not be expected to increase their capital levels. However, an institution with inadequate capital to serve as a buffer against unexpected losses from a CRE concentration should develop a plan for reducing its CRE concentrations or for maintaining capital appropriate for the level and nature of its CRE concentration risk.

This concludes the text of the Guidance entitled, Concentrations in Commercial Real Estate Lending, Sound Risk Management Practices.

Dated: December 7, 2006.

By the Office of Thrift Supervision.

John M. Reich,

Director.

[FR Doc. E6–21148 Filed 12–13–06; 8:45 am]

BILLING CODE 6720–01–P

[6] Savings associations are reminded that this guidance does not affect the existing statutory investment limitations as set forth in 12 CFR 560.30. The statutory investment limit for loans secured by nonresidential properties is 400 percent of total capital.

DEPARTMENT OF VETERANS AFFAIRS

Health Services Research and Development Service Merit Review Board; Notice of Meeting

The Department of Veterans Affairs (VA) gives notice under Public Law 92–463, Federal Advisory Committee Act, that a meeting of the Health Services Research and Development Service Merit Review Board will be held march 6–8, 2007, at the Sir Francis Drake Hotel, 450 Powell Street, San Francisco, CA. Various subcommittees of the Board will meet during that period. Each subcommittee meeting of the Merit Review Board will be open to the public the first day for approximately one half-hour from 8 a.m. until 8:30 a.m. to cover administrative matters and to discuss the general status of the program. The remaining portion of each meeting will be closed. The closed portion of each meeting will involve discussion, examination, reference to, and oral review of the research proposals and critiques.

The purpose of the Board is to review research and development applications concerned with the measurement and evaluation of health care services, the testing of new methods of health care delivery and management, and nursing research. Applications are reviewed for scientific and technical merit. Recommendations regarding funding are prepared for the Chief Research and Development Officer.

On Wednesday, March 7, six subcommittees will convene from 8 a.m. to 5 p.m. Those subcommittees are Implementation and Management Research Science, Chronic Disease Management & Long Term Aging, General Health Services Research, Special Populations, Equity/Women's Health and the Nursing Research Initiative (NRI). On Thursday, March 8, five subcommittees will convene from 8 a.m. to 5 p.m. Those subcommittees are Implementation and Management Research Science (continuation), Special Populations (continuation), General Health Services Research (continuation), Chronic Disease Management (continuation) and Equity/Women's Health review group (continuation).

After the subcommittees meet there will be a debriefing provided to members of Health Services Research & Development Service Scientific Merit Review Board. This debriefing, by teleconference, will be to discuss the outcomes of the review sessions and to ensure the integrity and consistency of the review process.

During the closed portions of the meetings on March 7–8, discussion and recommendations will include qualifications of the personnel conducting the studies (the disclosure of which would constitute a clearly unwarranted invasion of personal privacy), as well as research information (the premature disclosure of which would be likely to compromise significantly the implementation of proposed agency action regarding such research projects). As provided by subsection 10(d) of Public Law 92–463, as amended by Public Law 94–409, closing portions of these meetings is in accordance with 5 U.S.C. 552b(c)(6) and (9)(B).

Those who plan to attend the open session should contact the Scientific Merit Review Program Manager (124R), Health Services Research and Development Service, Department of Veterans Affairs, 1722 Eye Street, NW., Washington, DC 20006 at least five days before the meeting. For further information, call (202) 254–0207.

By Direction of the Secretary.

Dated: December 7, 2006.

E. Philip Riggin,

Committee Management Officer.

[FR Doc. 06–9663 Filed 12–13–06; 8:45 am]

BILLING CODE 8320–01–M

Federal Register

Thursday,
December 14, 2006

Part II

Department of Transportation

National Highway Traffic Safety Administration

49 CFR Part 572

Anthropomorphic Test Devices; ES–2re Side Impact Crash Test Dummy 50th Percentile Adult Male and SID–IIs Side Impact Crash Test Dummy 5th Percentile Adult Female; Final Rules

DEPARTMENT OF TRANSPORTATION

National Highway Traffic Safety Administration

49 CFR Part 572

Docket No. NHTSA–2004–25441

RIN 2127–AI89

Anthropomorphic Test Devices; ES–2re Side Impact Crash Test Dummy 50th Percentile Adult Male

AGENCY: National Highway Traffic Safety Administration (NHTSA), Department of Transportation (DOT).

ACTION: Final rule.

SUMMARY: This final rule amends the agency's regulation on anthropomorphic test devices to add specifications and qualification requirements for a new mid-size adult male crash test dummy, called the ''ES–2re'' test dummy. The ES–2re dummy has enhanced injury assessment capabilities compared to devices existing today, which allows for a fuller assessment of the types and magnitudes of the injuries occurring in side impacts and of the efficacy of countermeasures in improving occupant protection. The agency plans to use the ES–2re dummy in an upgraded Federal Motor Vehicle Safety Standard on side impact protection.

DATES: This final rule is effective June 12, 2007. The incorporation by reference of certain publications listed in the regulations is approved by the Director of the Federal Register as of June 12, 2007. If you wish to petition for reconsideration of this rule, your petition must be received by January 29, 2007.

ADDRESSES: If you wish to petition for reconsideration of this rule, you should refer in your petition to the docket number of this document and submit your petition to: Administrator, Room 5220, National Highway Traffic Safety Administration, 400 Seventh Street, SW., Washington, DC 20590.

The petition will be placed in the docket. Anyone is able to search the electronic form of all documents received into any of our dockets by the name of the individual submitting the comment (or signing the comment, if submitted on behalf of an association, business, labor union, etc.). You may review DOT's complete Privacy Act Statement in the **Federal Register** published on April 11, 2000 (Volume 65, Number 70; Pages 19477–78) or you may visit *http://dms.dot.gov.*

FOR FURTHER INFORMATION CONTACT: For non-legal issues, you may call Stan Backaitis, NHTSA Office of Crashworthiness Standards (telephone 202–366–4912). For legal issues, you may call Deirdre Fujita, NHTSA Office of Chief Counsel (telephone 202–366–2992) (fax 202–366–3820). You may send mail to these officials at the National Highway Traffic Safety Administration, 400 Seventh St., SW., Washington, DC 20590.

SUPPLEMENTARY INFORMATION:

Table of Contents

I. The ES–2re Dummy Generally Described
a. Development of the Rib Extensions
b. The Reference Materials for the Dummy
II. Notice of Proposed Rulemaking (NPRM)
III. Overview of Comments
IV. Response to the Comments
a. Biofidelity
1. ISO Technical Report 9790 Methodology
2. NHTSA Biofidelity Ranking System
b. Other Issues Relating to How Humanlike the Dummy Is
1. Anthropometry of Abdominal and Pelvic Regions
2. Sitting Height
3. ES–2re's Representation of Large Male Population
4. Abdominal Instrumentation
5. Shoulder Design
6. Rib Deflections
7. Rib Extensions
c. Repeatability and Reproducibility
1. Sample Size
2. Reproducibility of Pelvic Load Measurements
3. Sensitivity to Initial Conditions
4. Rib Acceleration Response
d. Directional Impact Sensitivity
1. Impact Direction
2. Rib Binding in ISO 9790 Tests
3. ISO 9790 Ratings for Lateral and Oblique Impacts
e. Durability
f. Symmetry
g. Using the ES–2 Test Dummy
h. Test Dummy Drawing Package
1. 3-D Shape Definitions
2. Material Specifications
3. Dummy Drawing Changes
i. Certification Procedures and Response Corridors
1. Overview of the Comments
2. Head Drop Test
3. Neck Flexion Test
i. Neck Response Corridors
ii. Neck Pendulum Aluminum Honeycomb
iii. Neck Pendulum Deceleration Filter Class
iv. Nodding Block Configuration
v. Adjusting Half-Spherical Neck Screws
4. Thorax
i. Full-Body Systems Test
ii. Specifying Impact Speed in Rib Module Drop Test
iii. Recovery Time Between Successive Tests
5. Lumbar Spine
i. Response Corridors
ii. Lumbar Cable Nut Adjustment
6. Shoulder
i. Shoulder Cord Tension
ii. Pendulum Configuration
7. Abdomen
8. Pelvis
9. Other Issues
i. Test Probe Suspension Cables and Attachments
ii. Pelvis and Abdomen Pendulum Filter Requirements
iii. Temperature
V. NHTSA Crash Test Experience
a. MDB Tests
b. Oblique Pole Tests
c. Rib Responses
d. Torso Back Plate Responses
e. Durability
VI. Conclusions
Rulemaking Analyses and Notices
Appendix A to Final Rule Preamble: Specific Drawing Comments and Agency Responses to Those Comments

NHTSA published a notice of proposed rulemaking (NPRM) that proposed to upgrade Federal Motor Vehicle Safety Standard (FMVSS) No. 214, ''Side Impact Protection'' (49 CFR 571.214) by, among other things, adopting a dynamic pole test into the standard (May 17, 2004; 69 FR 27990; Docket 17694; reopening of comment period, January 12, 2005, 70 FR 2105). The proposed pole test is similar to, but more demanding than, the one currently used optionally in FMVSS No. 201, ''Occupant Protection in Interior Impact'' (49 CFR 571.201). In the proposed pole test, a vehicle is propelled sideways into a rigid pole at an angle of 75 degrees, at any speed up to 32 km/h (20 mph). The NPRM proposed that compliance with the pole test would be determined in two test configurations, one using a test dummy representing mid-size adult males and the other using a test dummy representing small adult females. The NPRM proposed to require vehicles to protect against head, thoracic and other injuries as measured by the two test dummies. The agency also proposed using the dummies in FMVSS No. 214's existing moving deformable barrier (MDB) test, which simulates a vehicle-to-vehicle ''T-bone'' type intersection crash.[1]

[1] On August 10, 2005, the President signed the ''Safe, Accountable, Flexible, Efficient Transportation Equity Act: A Legacy for Users,'' (SAFETEA–LU), Pub. L. 109–59 (Aug. 10, 2005; 119 Stat. 1144), to authorize funds for Federal-aid highways, highway safety programs, and transit programs, and for other purposes. Section 10302(a) of SAFETEA–LU provides:

Sec. 10302. Side-Impact Crash Protection Rulemaking.

(a) Rulemaking.—The Secretary shall complete a rulemaking proceeding under chapter 301 of title 49, United States Code, to establish a standard designed to enhance passenger motor vehicle occupant protection, in all seating positions, in side impact crashes. The Secretary shall issue a final rule by July 1, 2008.

At the time of the enactment of § 10302(a), the agency's notice of proposed rulemaking to upgrade FMVSS No. 214 was pending. The final rule

This document establishes the specifications and qualification requirements for the new mid-size adult male crash test dummy, called the ''ES–2re'' test dummy, for use in FMVSS No. 214. The NPRM preceding this Part 572 final rule on the ES–2re dummy was published on September 15, 2004 (69 FR 55550; Docket 18864; reopening of comment period, January 12, 2005, 70 FR 2105).[2]

I. The ES–2re Dummy Generally Described

The ES–2re can be instrumented with a wide array of sensors to better predict a wider range of injury potential than any other currently available mid-size male side impact test dummy. The ES–2re is technically superior to both the SID–H3 50th percentile male test dummy (49 CFR Part 572, subpart M) currently used in the optional pole test of FMVSS No. 201 and the SID 50th percentile adult male test dummy (49 CFR Part 572, subpart F) now used in the MDB test of FMVSS No. 214. It can assess the potential for head, neck, thoracic, abdominal, pelvic, and other injuries. It can assess the potential for head injury (measuring the resultant head acceleration, which is used to calculate the Head Injury Criterion (HIC)); thoracic injuries in terms of spine and rib accelerations and rib deflections (chest deflection has been shown to be the best predictor of thoracic injuries in low-speed side impacts); abdominal injuries through three load cells to assess the magnitude of lateral and oblique forces; and pelvic injuries.[3]

Its improved biofidelity and enhanced injury assessment capability allows for a fuller assessment of the types and magnitudes of the injuries occurring in side impacts and a more penetrating evaluation of the efficacy of vehicle countermeasures installed to improve side impact protection than now possible using other existing side impact dummies. In the May 17, 2004 NPRM concerning FMVSS No. 214, NHTSA proposed injury criteria for the ES–2re's injury measuring instrumentation of the dummy's head, thorax, abdomen and pelvis. HIC would be limited to 1000 measured in a 36 millisecond time interval (HIC_{36}). Chest deflection would be limited to not greater than 42 millimeters (mm) (1.65 inch (in)) for any rib. Abdominal loads would be limited to 2,500 Newtons (N) (562 pounds). For pelvic injury, pubic symphysis force would be limited to 6,000 N (1,349 pounds). (See, ''Injury Criteria for Side Impact Dummies,'' Docket 17694.)

The ES–2re consists of a metallic ''skeleton'' which is covered by ''soft tissue'' consisting of rubber, plastic and foam. The dummy does not have lower arms because researchers concluded that lower arms on the side crash test dummy could interfere with the interaction of the side structure of a vehicle and the dummy's measurement of potential harm to the thoracic and pelvic regions. The ES–2re has a mass of 72 kilograms (kg) (158.8 pounds), which is the mass of a 50th percentile adult male without lower arms.[4]

The 90.0 cm seated height of the ES–2re is representative of adult males mid-size and taller. The dummy will provide valuable data on the interaction of these occupants with the vehicle's interior in FMVSS No. 214's side impact tests.

a. Development of the Rib Extensions

The ES–2re is a modified version of a European ES–2 side impact dummy, which was originally developed in Europe as the EuroSID–1 dummy in the late 1980s and early 1990s. The EuroSID–1 dummy is used in European Directive 96/27/EC. The EuroSID–1 dummy was redesigned and reevaluated during the late 1990s and early 2000 to address some problems with dummy performance, and was renamed the ES–2.

The ES–2re dummy is the result of a modification of the ES–2. Although the ES–2 has a better design than the EuroSID–1, the ES–2 has a back plate that causes a part of it to ''grab'' parts of a vehicle seat back in a crash test, which alters some of the dummy response measurements. To address the problem, which has also been observed in the EuroSID–1, the ES–2 dummy manufacturer redesigned the rib module by adding rib extensions to the dummy. The extended ribs provide a continuous loading surface that nearly encircles the thorax of the dummy and encloses the posterior gap of the ES–2 ribcage that was thought to be responsible for the seat back grabbing effect. The modified dummy is referred to as the ES–2re, with the ''-re'' suffix indicating the use of the rib extensions on the dummy. The agency's evaluation of the ES–2re dummy indicates that the rib extensions successfully addressed the back plate grabbing problem in the environments in which grabbing had occurred with the ES–2 dummy.

b. The Reference Materials for the Dummy

A technical report and other materials describing the ES–2re in detail have been placed in the following NHTSA dockets: the docket for the September 15, 2004 NPRM on the ES–2re (Docket 18864); the docket for the May 17, 2004 NPRM proposing the pole test upgrade to FMVSS No. 214 (Docket 17694); and the docket for today's final rule (Docket 25441). When we refer in this preamble to a docket item, we will identify by docket number where the item is filed.

The specifications for the ES–2re consist of: (a) A drawing package containing all of the technical details of the dummy; (b) a parts list; and (c) a user manual containing instructions for inspection, assembly, disassembly, use, and adjustments of dummy components. These drawings and specifications ensure that ES–2re dummies will be the same in their design and construction. The drawings, parts list and user manual are available for examination in the NHTSA docket section for this final rule (Docket 25441). Copies of those materials may also be obtained from Leet-Melbrook, Division of New RT, 18810 Woodfield Road, Gaithersburg, Maryland 20879, telephone (301) 670–0090.

II. Notice of Proposed Rulemaking (NPRM)

The NPRM preceding this Part 572 final rule on the ES–2re dummy was published on September 15, 2004 (69 FR 55550; Docket 18864). On January 12, 2005, in response to a petition from the Alliance of Automobile Manufacturers, NHTSA reopened the comment period for the NPRM until April 12, 2005 (70 FR 2105).

The September 15, 2004 NPRM discussed NHTSA's tentative findings that the ES–2re was commercially available, was sufficiently biofidelic, had good repeatability and reproducibility of its impact responses, performed well in vehicle crash tests, and had good durability in evaluation programs. NHTSA believed that the ES–2re could be used for both left- and right-side impacts. The agency also discussed in the NPRM that the dummy's responses did not show sensitivity to oblique impacts in full-

completing the rulemaking proceeding will be issued in the near future.

[2] NHTSA published an NPRM proposing to amend 49 CFR Part 572 to add the specifications for the small female dummy to Part 572 on December 8, 2004 (69 FR 70947; Docket 18865; extension of comment period, March 8, 2005; 70 FR 11189).

[3] The ES–2re can also assess load transfer between the upper and the lower torso, torso interaction with the vehicle seat back, neck injuries via upper and lower neck load cells; and the impact severity of the vehicle structure on the legs by way of a femur load cell. In addition, a clavicle load cell is available to assess shoulder loading.

[4] A 50th percentile adult male with lower arms has a mass of approximately 78 kg (172 pounds). If the ES–2re had arms, its mass would be equivalent.

scale crash tests. The agency also discussed in the NPRM proposed calibration test specifications and procedures.

III. Overview of Comments

The agency received comments from 5 different organizations: Autoliv, Denton ATD (DATD), First Technology Safety Systems (FTSS), Ferrari, and the Alliance of Automobile Manufacturers (Alliance). These comments, summarized below, are discussed in detail in the next section of this preamble. Autoliv generally supported the agency's proposal. DATD and FTSS were supportive, but suggested changes to the drawing package, certification corridors, and other technical matters of the NPRM. Ferrari stated that it observed ''anomalous'' peaks in the rib acceleration curves occurring between 67 and 73 ms after barrier impact with the vehicle, which Ferrari believed were caused by insufficient rebound damping in the rib modules.

The Alliance did not support the agency's proposal. The Alliance was concerned about matters including: the biofidelity of the dummy (the commenter believed that there are shortcomings in the ES–2re's shoulder, abdominal and pelvic regions, particularly when compared to the performance of the ES–2 and the WorldSID [5] in full-vehicle tests); the repeatability and reproducibility of the ES–2re; the directional impact sensitivity of the dummy; and miscellaneous issues, such as the symmetry of abdomen response when impacted on the right and left sides and the durability of the ES–2re. The Alliance also had comments regarding the proposed certification procedures and corridors. The Alliance submitted a petition for rulemaking (Docket 17252) asking NHTSA to initiate rulemaking to incorporate WorldSID into 49 CFR Part 572 and to use WorldSID in the upgrade of FMVSS No. 214 rather than the ES–2re.[6] The Alliance further suggested that, prior to the incorporation of WorldSID into 49 CFR Part 572, the ES–2 dummy should be used rather than the ES–2re, and only to the extent of using the dummy to measure responses relating to the head injury criterion (HIC).

IV. Response to the Comments

a. Biofidelity

Biofidelity is a measure of how well a test device duplicates the responses of a human in an impact. As discussed in the NPRM, two methods are currently available for assessing the biofidelity of a dummy in side impact testing. These are: (a) An International Organization of Standardization (ISO) procedure, referred to as ISO Technical Report (TR) 9790, which determines the biofidelity of a dummy by how well the dummy's body segment and/or subsystem impact responses replicate cadaver responses in defined impact environments; and (b) a NHTSA Biofidelity Ranking System.[7] The latter method determines the dummy's biofidelity based on two assessment measures: the ability of a dummy to load a vehicle or some other type of an impact surface as a cadaver does, termed ''External Biofidelity''; and the ability of a dummy to replicate those cadaver responses that best predict injury potential, termed ''Internal Biofidelity.'' The NPRM explained that the ES–2re's biofidelity was evaluated under both of these methodologies.

1. ISO Technical Report 9790 Methodology

The ISO rating system is based on a scale of 0 to 10, with 0 signifying total lack of biofidelity and 10 signifying that the body segment has a biofidelic response much like that of a human subject. Once the ratings are established for each body segment, the overall dummy's biofidelity is calculated and its ranking determined using the following classification scale: 0 to 2.6 (Unacceptable); 2.6 to 4.4 (Marginal); 4.4 to 6.5 (Fair); 6.5 to 8.6 (Good); 8.6 to 10 (Excellent).

The agency had tentatively assessed in the NPRM that the ISO-based biofidelity assessment of 4.6 would generally be the same for the ES–2re as the ES–2. The Occupant Safety Research Partnership (OSRP) and Transport Canada conducted biomechanical testing on the ES–2 dummy using the ISO-specified methodology and test procedures. The results of these tests were reported by Byrnes et al. in the 2002 Stapp Car Crash Journal, Vol. 46, in Paper No. 2002–22–0014. Because the ES–2re dummy's backplate modifications were developed with the express objective not to alter in any way the ES–2 dummy's impact response, and because the ES–2re conformed to the same calibration levels as the ES–2, the agency believed that the rib extension modifications to the ES–2 would not affect the ISO based biofidelity assessment. (Moreover, as reported in the NPRM, the findings of the NHTSA Biofidelity Ranking System tests appeared to confirm this assessment, as it was established that under that ranking system both the ES–2 and the ES–2re dummies had nearly identical biofidelity levels.)

In the NPRM, the agency stated that a biofidelity rating of ''fair,'' at 4.6, would be an improvement over the SID and EuroSID–1, which received ratings of 2.3 and 4.4, respectively (Byrnes, *et al.*, ''ES–2 Dummy Biomechanical Responses,'' 2002, Stapp Car Crash Journal, Vol. 46, #2002–22–0014, p. 353). The agency believed that the ES–2 (ES–2re) ISO biofidelity rating also compared favorably to that of the SID/HIII, which received an overall rating of 3.8.[8]

Comment: In its comment, the Alliance disagreed with NHTSA's statement that the rib modifications made to the ES–2 and resulting in the ES–2re configuration had no effect on the dummy's ISO-based biofidelity assessment. The Alliance stated that testing conducted by the OSRP resulted in an overall ISO score of 4.3 for the ES–2re, as compared to a 4.6 score for the ES–2.

Agency response: The Alliance neither provided a reference to a published report nor provided supporting data related to the assertion that the overall ISO score for the ES–2re is 4.3. The absence of substantiation of the comment limits our ability to respond. Even so, assuming the accuracy of the comment that the rib extensions reduced the ISO-based biofidelity assessment of the ES–2 from 4.6 to 4.3, or from ''fair'' to ''marginal,'' we nonetheless conclude that a 4.3 rating of the ES–2re is acceptable. NHTSA believes that the side impact dummy used in FMVSS No. 214 should measure the risk of thoracic and abdominal injuries, since these injuries are the most prevalent injuries in side crashes. The ES–2 (which does not have the rib extensions) is not suitable for use in our compliance testing, because of its back plate design and the problem that can occur with the back plate loading some seat backs and influencing the

[5] WorldSID is the next-generation 50th percentile male side impact dummy developed by industry representatives from the U.S., Europe and Japan, with the support of the European and Japanese governments (see Docket No. 2000–17252). This future dummy is believed by its developers to have better biofidelity than existing dummies, and is intended to better predict a wider range of injury potential in side impact testing than current dummies.

[6] The agency's response to the petition will be issued in rulemaking documents relating to the FMVSS No. 214 rulemaking.

[7] The NHTSA Biofidelity Ranking System method was reported by Rhule H., et al., in a technical paper in the 2002 Stapp Car Crash Journal, Vol. 46, p. 477, ''Development of a New Biofidelity Ranking System for Anthropomorphic Test Devices.''

[8] The biofidelity rating for the SID dummy used in FMVSS No. 214 is 2.3. The rating for the SID/HIII of 3.8, using the ISO method, reflects use of the special purpose side impact HIII head and neck as noted in 63 FR 41468, August 4, 1998.

dummy's rib deflection measurements. The rib extensions of the ES–2re allow for more accuracy in the measurement of rib deflections. Although the dummy with the extensions has a slightly lower, yet acceptable, ISO biofidelity ranking than a dummy without the rib extensions, the ES–2re is preferable over the ES–2 because it allows the agency to measure fully the risk of thoracic and abdominal injury in side crashes. We note also that a 4.3 ISO rating is an improvement over the biofidelity rating of SID, which received a rating of 2.3 (Byrnes, et al., ''ES–2 Dummy Biomechanical Responses,'' 2002, Stapp Car Crash Journal, Vol. 46, #2002–22–0014, p. 353). The ES–2re biofidelity rating also compares favorably to that of the SID/HIII, which received an overall rating of 3.8. Both the SID and SID/HIII have performed well in facilitating the installation of life-saving countermeasures that have substantially improved the safety of occupants in side crashes.

2. NHTSA Biofidelity Ranking System

Further, under the NHTSA biofidelity ranking system, the biofidelity rankings for the ES–2 and ES–2re are nearly identical. The biofidelity ranking system developed by Rhule, H., et al., *supra*, includes an assessment of the dummy's External Biofidelity and Internal Biofidelity. The Overall External and Internal Biofidelity ranks are an average of each of the external and internal body region ranks, respectively. A lower biofidelity rank indicates a more biofidelic dummy by this NHTSA ranking method. A dummy with an External and/or Internal Biofidelity rank of less than 2.0 is considered to respond much like a human subject.

The NHTSA ranking system is based on a variety of cadaver and dummy exposures, such as head drop tests, thorax and shoulder drop tests, thorax and shoulder pendulum tests, and whole body sled tests. The NHTSA ranking system also includes abdominal and pelvic offset sled test conditions. Each test condition has a response corridor derived from human cadavers and assigned a weight factor based upon the robustness of the particular test and its similarity to full scale crash conditions. For each response requirement, the cumulative variance of the dummy response relative to the mean cadaver response (DCV) and the cumulative variance of the mean cadaver response relative to the mean plus one standard deviation (CCV) are calculated. The ratio of DCV/CCV expresses how well the dummy response duplicates the mean cadaver response: A smaller ratio indicating better biofidelity.

Although this method does not establish an ''absolute'' ranking scale, the ranks provide a relative sense of the ''number of standard deviations away'' the dummy's responses are from the mean human cadaver response. Rhule conducted an analysis and found that if the dummy's biofidelity ranking is below two, then the dummy is behaving similar to the human cadaver. The evaluation methodology provides a comparison of both dummy response to cadaver response as well as a comparison of two or more dummies.

Rhule et al., *supra*, determined external and internal biofidelity rankings for the ES–2 dummy. NHTSA later repeated the tests for the ES–2re to determine that dummy's biofidelity rankings. Tables 1 and 2, below, provide a summary of External Biofidelity and Internal Biofidelity rankings, respectively, for the ES–2 and the ES–2re. The results of NHTSA's Biofidelity Ranking System tests indicate that the ES–2 and ES–2re dummies have essentially the same external and internal biofidelity assessment values, and that the rib extensions have had no effect on the biofidelity of the ES–2. The overall external biofidelity scores were 2.7 and 2.6 for the ES–2 and ES–2re, respectively, while the overall internal biofidelity scores for both were 1.6. The testing conducted for the ranking indicates that there exists no significant difference in the response characteristics of the ES–2 and ES–2re dummies.

TABLE 1.—EXTERNAL BIOFIDELITY RANKINGS OF THE ES–2 AND ES–2RE

External biofidelity rank	ES–2	ES–2re
Overall	2.7	2.6
Head/Neck	3.7	3.7
Shoulder	1.4	1.4
Thorax	3.2	2.9
Abdomen	2.5	2.6
Pelvis	2.7	2.7

TABLE 2.—INTERNAL BIOFIDELITY RANKINGS OF THE ES–2 AND ES–2RE

Internal biofidelity rank	ES–2	ES–2re
Overall with T1 (w/o abdomen)	.....	1.5
Overall with Defl. (w/o abdomen)	1.6	1.6
Overall with TTI (w/o abdomen)	n/a	1.6
Head*	1.0	1.0
Thorax—T1	n/a	1.5
Thorax—Delft	1.7	1.8
Thorax—TTI	.....	1.8
Abdomen	n/a	n/a
Pelvis	2.1	2.0

* In its comment, the Alliance pointed out an error in the internal biofidelity score for the ES–2 head, contained in Table 5 of the NPRM (69 FR at 55554, column 3). Table 5 indicated that the ES–2re head received a score of 1.0 while the ES–2 scored a 1.6. As shown in this corrected Table 2, both dummies scored a 1.0 for head internal biofidelity using the NHTSA ranking system.

Conclusion: Back plate loading is an undesirable feature of the ES–2 dummy (see NHTSA Technical Report, ''Design, Development, and Evaluation of the ES–2re Side Crash Test Dummy,'' May 2004, NHTSA Docket No. 2004–17694–11). The rib extensions of the ES–2re have proven to reduce the likelihood of the dummy's spine and back plate to interact with the vehicle's seat back. NHTSA believes that the rib extensions are a necessary component of the dummy and their inclusion has minimal effect on the dummy's response biofidelity. Accordingly, we conclude that the ES–2re test dummy, with rib extensions, will suitably duplicate the responses of a human in FMVSS No. 214 side impact tests.

b. Other Issues Relating to How Humanlike the Dummy Is

Commenters, primarily the Alliance, raised other issues relating to the humanlike qualities of the ES–2re. The Alliance's comment included a discussion of full-vehicle tests conducted by the OSRP, Toyota, and Transport Canada. The OSRP conducted matched-pair full-scale vehicle tests to compare the responses of the ES–2re, ES–2, and WorldSID in two conditions: (a) FMVSS No. 214 MDB tests at 33.5 mph of a 4-door, mid-size sedan, no air bag and a 4-door, small sedan, head/torso side air bag (SAB); and (b) oblique pole test at 20 mph, 15° impact angle, of a 4-door, small sedan, head/torso SAB. The majority of the Alliance's comments regarding the OSRP tests compared the ES–2re responses to those of the WorldSID, to support the commenter's opinion that the ES–2re is not as humanlike as the WorldSID.

We respond in this section to the issues raised by the commenters relating to the acceptability of the ES–2re as a test device for FMVSS No. 214. We will not discuss whether WorldSID is a more humanlike device than the ES–2re because the WorldSID dummy is still

under development. As recently as the spring of 2006, the WorldSID design was changing and has not been assessed for its suitability as a compliance test instrument. In short, WorldSID will not be ready for some time to attain the advancements in side impact occupant protection that the agency can achieve today with the ES–2re test dummy.

1. Anthropometry of Abdominal and Pelvic Regions

The Alliance believed that the EuroSID family, including the ES–2 and the ES–2re test dummies, is too narrow in the abdominal and pelvic regions as compared to ''the UMTRI anthropometry,'' whereas, the commenter believed, WorldSID is representative of the United States and world populations.

Agency Response: In support of its comment, the Alliance references a figure in its submission that provides a coronal-plane view of the ES–2 dummy and the WorldSID. The figure identifies the ES–2 pelvis breadth as 364 mm and the abdominal breadth as 282 mm, while the WorldSID's corresponding dimensions are labeled as 420 mm and 240 mm. (NHTSA believes that the Alliance made an error in its label and that the correct WorldSID abdomen dimension should be 340 mm.)

In its submission, the Alliance states: ''The anthropometry of the U.S. population is detailed in a study by UMTRI (1985)[1]. [Footnote in text.]'' The footnote only states ''UMTRI 1985'' without a complete bibliographic reference. NHTSA believes that the Alliance is referring to the University of Michigan Transportation Research Institute (UMTRI) document ''Anthropometry of Motor Vehicle Occupants,'' Volume 1, 1983, performed under NHTSA contract DTNH–80–C–07502. In this UMTRI study, the pelvis and abdominal breadths of the mid-sized adult male are reported to be 385 and 325 mm, respectively.

Table 3 below, ''UMTRI, ES–2re and WorldSID Dimensions,'' summarizes the UMTRI dimensions and compares them to the corresponding dimensions in the ES–2re and WorldSID.

TABLE 3.—UMTRI, ES–2RE AND WORLDSID DIMENSIONS

Dimension	UMTRI	ES–2re*	Delta, UMTRI vs ES–2re	WorldSID	Delta, UMTRI vs WorldSID
Abdomen breadth	325 mm	282 mm	−43 mm	340 mm	+15 mm
Pelvis breadth	385 mm	366 mm	−19 mm	420 mm	+35 mm

* The ES–2re dimensions are based on the Eurosid specifications derived from European anthropometric studies.

From the table, it is observed that the ES–2re does have an abdomen and pelvis that are slightly narrower than the UMTRI target dimension. However, to our knowledge this is of no consequence. Discrepancies relative to the anthropometry targets are often necessary to balance a number of design issues, such as the need to fit the dummy with electronic instrumentation for injury assessment capabilities, component durability, and repeatability of the responses.[9] The Alliance did not provide any information regarding potential adverse effects that might result from the abdomen and pelvis being slightly narrower in the coronal plane and NHTSA is not aware of any adverse effects associated with the commenter's claim. Accordingly, NHTSA believes that the current dimensional properties of the ES–2re abdomen and pelvis are satisfactory for their intended purpose.

2. Sitting Height

The Alliance commented that the pelvis of the ES–2re does not account for compression of soft tissue that occurs when a person is seated in a vehicle seat, and results in a seating height difference between the ES–2re and WorldSID of 58 mm, with the ES–2re seated higher.

Agency Response: The comment did not provide any information as to why the seating height of the ES–2re is not adequate for the dummy's intended application.[10] It appeared that the commenter assumed that the WorldSID seating height is accurate and the ES–2re's seating height is erroneous because it does not match that of the WorldSID.

NHTSA's review of sitting height anthropometry shows that the mean value of the erect sitting height of the 50th percentile male is 911 mm (reference UMTRI–83–53–1). The designed erect sitting height of the ES–2 is 909 mm (reference E/ECE/324, Regulation No. 95, October 1, 2004). Comparable design targets for the WorldSID are not yet published. NHTSA attempted to measure the erect seating height of a sample WorldSID dummy, however, making a comparable measurement proved to be somewhat problematic. The WorldSID's pelvis is designed to have an automotive-seated posture and is somewhat resistant to being placed into an erect posture. We measured the WorldSID to have a sitting height of 850 mm. While we do not have data for an average seated occupant height, the UMTRI data indicate that the ES–2re for the intended application is representative of the seated height of real people.

3. ES–2re's Representation of Large Male Population

In the September 15, 2004 NPRM (Docket 18864), NHTSA presented injury and fatality statistics in Tables 1 and 2 of that document. Table 1 represented the entire U.S. motor vehicle population. The NPRM stated, ''Of these [statistics in Table 1], approximately 35 percent are small stature occupants. The remaining occupants fall into the midsize and large segments of the population. The ES–2re dummy would address the risk of injury of these occupants in side impacts.'' The Alliance disagreed with NHTSA's assertion that the ES–2re would address the risk of injury for the large-sized segment of the population. The Alliance stated, ''[T]he ES–2re dummy anthropometry and weight are not representative of a large male.''

Agency Response: The agency has assigned benefits to the 50th percentile adult male and 5th percentile adult female dummies in a similar manner as that conducted in the advanced air bag final rule of FMVSS No. 208 (65 FR 30680; May 12, 2000). The countermeasures developed for the 50th percentile male are likely to benefit the 95th percentile adult male. Differences in height between a midsize male and large male occupants in the UMTRI

[9] We note that the WorldSID's abdomen and pelvis are slightly wider than the UMTRI dimension, which may also be inconsequential.

[10] Also, no data was provided regarding what type of vehicle was used or what seating procedure was applied that resulted in the alleged 58 mm difference. Different vehicle seat configurations and materials will play an important role in the seating height of the dummy and, in the absence of any detailed information, it was not possible for us to further examine the assertion.

contoured seat study is 2.6 cm (approximately 1 inch), and in standardized normal driving posture is 5 cm (1.96 inches) (UMTRI–83–53–1). The above data indicate that in a vehicle, the head of an ES–2re dummy would be lower than that of a large (95th percentile) male occupant by approximately 1 to 2 inches. FMVSS No. 214 pole test data indicate that curtain bags, at an inflated stage, come down far enough to cover the head of the ES–2re. Since the head of the seated 95th percentile male is higher than that of the ES–2re 50th percentile adult male dummy, the countermeasures developed to meet the test using the ES–2re 50th percentile adult male dummy are likely to provide similar benefits to the 95th percentile adult male occupant.

4. Abdominal Instrumentation

The Alliance stated that OSRP reported that the ES–2re measured abdominal forces below an injury assessment reference value (IARV) in full-scale tests, whereas WorldSID measured abdominal deflections above an IARV.[11] The commenter also stated that an upcoming research paper will report that the ES–2re is inadequately instrumented in the abdominal region, allowing it to miss important vehicle interactions. The Alliance stated that, in contrast to the ES–2re, the WorldSID presents a continuous surface through the thorax and abdomen up to the pelvis region, that is fully instrumented in the thorax and abdomen regions to ensure that all dummy to vehicle interactions are measured.

Agency Response: The ES–2re makes possible a more complete assessment of vehicle performance in side impacts than the SID or the SID/HIII, which will lead to greater side impact protection for occupants. In a NASS study of side impact crashes, it was estimated that between 8.5 percent and 21.8 percent of all AIS 3+ injuries are to the abdomen of restrained near side front seat occupants.[12] The abdominal load cells are sufficiently sensitive to measure the potential for injury. In an FMVSS No. 214 moving deformable barrier (MDB) test described in the May 2004 NPRM (69 FR at 28010, Docket 17694), the ES–2re detected a high abdominal force in the Chevrolet Impala at the dummy's abdominal area that was caused by an intruding armrest. In full-scale vehicle oblique pole tests conducted by the agency (see ''NHTSA Fleet Testing for FMVSS No. 214 Upgrade MY 2004–2005,'' discussed in Section V of this preamble), three vehicles exhibited loads which exceeded the IARV for the abdomen: the Ford 500, Chevy Colorado, and Ford Expedition. Because the current side impact dummy used in FMVSS No. 214 does not measure abdominal force, this potential injury risk will be newly detected by the ES–2re.

The commenter failed to show that the abdominal measurements of the ES–2re are problematic or deficient. The injury measuring capabilities of the ES–2re and the WorldSID are different. The WorldSID IARV for abdomen is based on abdomen rib deflection, while the ES–2re's IARV used in the FMVSS No. 214 final rule is based on loads measured at the abdomen (abdominal force limit of 2,500 N). Limiting the load to the abdomen will lead to important gains in occupant protection.

The agency also believes that the ES–2re is well instrumented in the abdomen region. The abdomen instrumentation is appropriately located and sensitive to lateral loading in the region above the pelvis and below the ribs. ES–2re drawing number 175–0000, sheet 4 of 5, provides information regarding the location of the abdominal load cells with respect to the pelvis and the lower rib of the thorax. The abdominal load cell extends from just below the upper surface of the pelvis, upward across the abdominal region, and ends approximately 50 mm below the lower surface of the lower thoracic rib. The load cell provides adequate coverage for measuring loads imparted to the abdominal region.

5. Shoulder Design

The Alliance referred to matched pair full-scale oblique pole tests that the commenter said Transport Canada (TC) conducted with the WorldSID and ES–2re. The Alliance stated that visual observations made in the TC study indicated that the ES–2re shoulder ''rotated significantly'' while the WorldSID shoulder ''deflected laterally inward towards the spine of the dummy.'' ''This [WorldSID's] motion is similar to the human shoulder tests run by Compigne et al,'' which, the Alliance stated, showed that ''the human shoulder deflects in oblique impact instead of rotating away from the impact'' or ''compresses inward and moves slightly backwards during loading from the front or directly from the side.'' The Alliance stated that the ES–2re dummy's shoulder rotates away from intruding structures, which can lead to a ''reduced excursion of the head when compared to WorldSID head kinematics'' and ''lower rib deflections [compared to WorldSID] that were evenly distributed across the ribs.'' To illustrate its comment, the Alliance referenced a Figure 18 in its submission, which depicted several camera images from tests on an Audi vehicle with thorax and window curtain side air bags using the ES–2re dummy and the WorldSID. The commenter also stated that in full-scale vehicle crash tests, ''The components of force measured at the shoulder of the ES–2re describe a combined loading characterized by equivalent longitudinal and lateral forces whereas the WorldSID forces are purely lateral.''

Agency Response: Test data indicate that the ES–2re's shoulder is fully acceptable. There is no indication of any detrimental effects in vehicle crash tests relating to the ES–2re's shoulder design, such as rib flat-topping which might occur when the shoulder has reached its limit for range of motion. Further, upon examination of the Alliance's Figure 18, we observe that: (1) The ES–2re's shoulder and head appear to be higher relative to the vehicle interior than that of the WorldSID; (2) the ES–2re's shoulder interacts substantially with the side curtain air bag, whereas the WorldSID's shoulder does not appear to contact the window curtain air bag; (3) the ES–2re's head contacts the window curtain air bag higher than does the WorldSID's head, and possibly makes contact with the upper portion of the door trim. These observations indicate that the ES–2re and WorldSID dummies experienced different loading patterns, consistent with the lower seated height of the WorldSID. To the extent that the WorldSID development has not yet been completed, any assessment about differences in kinematics and impact responses between the two dummies is premature. Also, scientific information is not available at this time to support a determination as to whether the ES–2re or the WorldSID has a better shoulder design. We believe the commenter's reference to the Compigne study is not relevant. The Compigne research studied localized pendulum impacts to the shoulder in a controlled test environment, whereas the full-scale oblique pole crashes conducted by TC resulted in loading over a much broader area of the dummy, with no controls on the direction or magnitude of the loading. With regard to internal shoulder loading, the scientific literature on this subject has not characterized internal shoulder loads recorded during lateral and oblique shoulder impacts. In the studies, only

[11] The Alliance did not provide any data to substantiate a basis for comparison among tests, such as equivalency of vehicle crash pulses or intrusion patterns.

[12] Samaha, R.S., Elliot, D., ''NHTSA Side Impact Research: Motivation for Upgraded Test Procedures,'' *supra*.

pendulum impact loads, an external load, have been recorded. In the absence of such data, it is not possible to establish a biofidelic basis for internal shoulder loads or to determine whether the ES–2re's or the WorldSID's internal shoulder responses better represent those of a human shoulder.

6. Rib Deflections

The Alliance's comment included a discussion of full-vehicle tests conducted by the OSRP, Toyota, and Transport Canada. The OSRP conducted matched-pair full-scale vehicle tests to compare the responses of the ES–2re, ES–2, and WorldSID in two conditions: (a) FMVSS No. 214 MDB tests at 33.5 mph of a 4-door, mid-size sedan, no air bag and a 4-door, small sedan, head/torso side air bag (SAB); and (b) oblique pole test at 20 mph, 15° impact angle, of a 4-door, small sedan, head/torso SAB. The majority of the Alliance's comments regarding the OSRP study are comparisons of the ES–2re responses to those of the WorldSID and ES–2.

A. *Rib Deflections of ES–2re vs. WorldSID in Perpendicular Impacts.* The Alliance believed that in perpendicular impacts, the ES–2re exhibited higher rib deflections than either the WorldSID or ES–2.

Agency Response: We note that the Alliance did not provide any data to substantiate a basis for comparison among tests, such as equivalency of vehicle crash pulses or intrusion patterns. Rib deflection response variation could be attributed to variations in crash pulse or intrusion patterns, which were not quantified in the Alliance's submission.

Further, with regard to the comparison between the ES–2 and the ES–2re, an increase in rib deflection is not unexpected or surprising. The ES–2re's rib extensions and modified back plate prevent the spine box from interacting with the vehicle seat. That interaction had limited the lateral torso translation of the ES–2 and provided an unrealistic load path in the dummy. Loads that would be absorbed by the spine box of the ES–2 are directed to other body segments in the ES–2re, such as the thorax, and thus a greater rib deflection in the ES–2re is anticipated. With regard to the comparison of ES–2re rib deflections with those of the WorldSID, the observation that the ES–2re exhibited a different amount of rib deflection than that of the WorldSID does not indicate a shortcoming with the ES–2re. To the extent that the WorldSID development has not been completed, specific comments about differences in rib deflections in vehicle crash tests or comparative biofidelity between the two dummies are premature.

B. *Rib Deflections of ES–2re vs. WorldSID in Oblique Loading.* The Alliance stated that the OSRP tests showed that the ES–2re exhibits lower rib deflections than either the WorldSID or ES–2 when subjected to oblique loading in FMVSS No. 214 MDB tests, and that Transport Canada observed ''under oblique loading conditions, the range of WorldSID rib deflections was much greater than the range of the ES–2re rib deflections. * * * Therefore, WorldSID appears to be more sensitive to differences in loading along the torso and better able to discriminate different loading conditions than the ES–2re.''

Agency Response: The observation that the ES–2re exhibited a different amount of rib deflection than that of the WorldSID and ES–2 does not indicate a shortcoming with the ES–2re.[13] The ability of the ES–2re to measure rib deflections in a meaningful way in a vehicle crash test is discussed in the section, ''Directional Impact Sensitivity,'' *infra.* Inasmuch as the WorldSID development has not been completed, specific comments about differences in rib deflections in oblique vehicle crash tests are premature. While the agency remains committed to proposing the incorporation of the WorldSID when the dummy is fully developed and shown to be suitable, gains in occupant protection will result from use of the ES–2re in today's side impact testing.

7. Rib Extensions

A. *Back Plate Loads.* The Alliance stated that the ES–2re back plate displayed reduced lateral loads and increased longitudinal loads as compared to the ES–2 when tested in FMVSS No. 214 MDB tests.

Agency Response: The ''no rib grab'' modifications made to the ES–2 dummy are intended to preclude the dummy's spine from acting directly as a lateral load path. Thus, it is reasonable to expect reduced lateral loads in the backplate of the ES–2re and somewhat increased front-to-back loading as the dummy interacts with the curvature of the seatback. The Alliance did not offer any supporting evidence that would indicate that the increase in longitudinal loads was unrealistic or that it resulted in any type of detrimental effect. NHTSA is unaware of detrimental effects that would arise due to increased longitudinal loading of the back plate.

B. *Load Path.* The Alliance also provided comments on Toyota full-scale vehicle tests in which the performance of the ES–2 and ES–2re were compared for oblique pole impacts. The commenter stated that during the oblique pole test, the door trim separated from the back of the door and struck the dummy's torso obliquely from the rear. The commenter believed that the rib extensions in the ES–2re provide a load path not found in the ES–2, and thus rib deflections for the ES–2re were greater than that observed in the ES–2.

Agency Response: NHTSA believes that the rib extensions found in the ES–2re represent a more humanlike continuous loading surface configuration than that of the ES–2. Since the ES–2 does not have structural elements at the oblique posterior location, there is nothing to impact, and so it is reasonable to expect lower rib deflections for oblique rear loading conditions than would occur for either the ES–2re, or in humans, under similar loading.

c. Repeatability and Reproducibility

A dummy's repeatability and reproducibility is typically based on the results of component tests and sled tests. (Repeatability is the similarity of responses of a single dummy measured under multiple identical test conditions. Reproducibility is the smallness of response variability between different dummies of the same design under identical test conditions.) In the tests, the impact inputs as well as the test equipment are carefully controlled to minimize external effects on the dummy's response.

Component tests are typically better controlled than sled and vehicle tests, and thus produce more reliable estimates of the dummy's repeatability and reproducibility than is possible in the latter-type tests. Component tests are used to establish the dummy's component performance relative to the biomechanical corridors to which each major body segment must correctly respond. That is, if the dummy's component is or becomes deficient, the component test will identify to the user that the component will not respond properly in impact tests.

Sled tests offer a method of evaluating the dummy as a complete system in an environment more like a vehicle test. Sled tests establish the consistency of the dummy's kinematics, its impact response as an assembly, and the integrity of the dummy's structure and instrumentation under controlled and

[13] Furthermore, rib deflection response variation could be attributed to variation in crash pulse or intrusion patterns, which were not quantified in the Alliance's submission. We note also that the validity of the WorldSID's rib deflection responses in a vehicle crash test has not been established.

representative crash environment test conditions.

NPRM

The NPRM stated that the agency's component and sled repeatability and reproducibility tests were based on two dummies. (See ''Technical Report—Design, Development and Evaluation of the ES–2re Side Crash Test Dummy,'' Docket 17694.)

Component Tests

The component tests were conducted on head, neck, shoulder, upper rib, middle rib, lower rib, abdomen, lumbar spine and pelvis body regions. The repeatability assessment was made in terms of percent CV (Coefficient of Variance). A CV value of less than 5 percent is considered excellent, 5–8 percent good, 8–10 percent acceptable, and above 10 percent poor.[14] The repeatability of the dummies was assessed in two separate series of tests. In the first series, the dummy calibrations were performed between sled or vehicle crash tests. In the second series, the calibration tests were performed consecutively without any other intermittent tests. In the first series, nine tests were performed with one of the dummies, and seven tests with the other. In the second series, two newly acquired dummies were exposed to five sets of calibration tests each. Reproducibility was assessed by comparing the average responses of both dummies.

The results of the component repeatability tests indicated ''excellent'' and good repeatability for the ES–2re dummy for all components except for the pelvis, which had a rating classification of ''good,'' and the shoulder with a rating of ''acceptable.''

The reproducibility assessment was made in terms of response differences between each of the two sets of dummies with respect to the mean. The rating for reproducibility takes into account the cumulative variabilities of two or more dummies and is primarily indicative of the repeatability of the manufacturing process of the same type of dummy and to some extent the repeatability of design specifications, inspection, and test methodology. The reproducibility assessment does not serve the purposes of accepting or rejecting the dummy; rather it is an indication of how far the responses of different dummies could vary under identical test conditions. The results of the pooled component tests indicate that the neck, thorax, lumbar spine and pelvis responses are well below the 5% level and the head, shoulder and abdomen response below the 7% level. These levels are quite acceptable and consistent with the repeatability norms.

Sled Tests

To reduce test-to-test variation of sled pulse parameters, NHTSA tested two ES–2re dummies (designated ''dummy #070'' and ''dummy #071'') simultaneously on a dual occupant side impact Hyge sled buck developed by the agency. The sled pulse was an approximate half-sine wave, with the peak acceleration of 12.7 g's and duration of approximately 80 ms. The impact speed was 6.7 meters per second (m/s) (22 ft/s). Two test conditions were used for the repeatability and reproducibility assessment: a flat rigid wall; and a rigid wall with abdomen offset (simulating a vehicle armrest). The two ES–2re dummies were exposed to two series of five Hyge sled tests, for a total of 10 test exposures per dummy.

For the flat wall test condition, the wall was 374 mm (14.7 in) high from the front edge of the seat, and 368 mm (14.5 in) long from the back of the seat. For the abdomen offset test condition, the same flat wall was used, with a protruding 305 mm (12 in) long, 76 mm (3 in) thick and 83 mm (3.3 in) wide wooden offset block attached to the wall. The offset block, simulating an armrest, was oriented such that it would impact the abdomen only, above the pelvis and below the lower rib. The objective of the abdomen offset tests was to provide a test environment with severe loading of the abdominal region.

The sled buck incorporated a Teflon-covered bench seat with two Teflon-covered rails to support the seated dummies from behind. As the sled buck was accelerated, the buck slid beneath the dummies until the dummies' left side impacted the rigid wall.

High-speed digital video cameras were positioned in front of each dummy in order to capture head motion for use in performing motion analysis of the head translation. The dummies were instrumented with sensors to record principal injury indicators such as head, resultant lower spine (T12) and pelvis accelerations, rib deflections, abdominal, lumbar and pubic symphysis loads, and other parameters. A contact switch was positioned on the side of each dummy and on the load wall at the location of first contact to indicate the precise instant of dummy contact with the wall.

Flat Rigid Wall Test Results

Using the dummy rating practice set forth in ISO/TC22/SC12/WG5, generally the responses in the flat wall tests displayed either excellent or good repeatability, except for the lumbar Y (shear) force repeatability of dummy Serial Number (S/N) #070 falling outside the CV acceptability boundary at 14.8%. This elevated CV value for dummy #070 also was responsible for a reproducibility assessment at 17.5%. While these CV values are relatively high, the agency is not considering an injury assessment associated with this response. Moreover, this response is not considered to be of importance since it did not have an effect on either the magnitude of the loading or the variability of the adjacent structure responses, such as pubic symphysis, the abdomen and the T12. HIC responses exhibited excellent repeatability of each dummy and reproducibility of both dummies. In all tests, the rib displacement time history provided a smooth response, with no indications of the flat topping phenomena that had been a shortcoming of previous versions of the EuroSID, EuroSID–1, and the prototype ES–2 dummies.

Rigid Wall With Abdomen Offset Test Results

The responses for the abdomen offset sled tests[15] provided either excellent or good repeatability and reproducibility, except for one test in which the lumbar moment reproducibility response had a CV value of 16.7, which is only by 1.7% into the poor range. While this CV value is high, this measurement is not considered for injury assessment with the EuroSID, EuroSID–1 and ES–2re dummies. Furthermore, this slightly elevated response appears not to affect either the magnitude of the loading or the variability of the adjacent structure responses, such as pubic symphysis, the abdomen, the T12 moment and the rib displacement time history, without any indications of flat topping.

Based on the above, the agency tentatively concluded that the repeatability and reproducibility of the

[14] ISO/TC22/SC12/WG5.

[15] The first test in the series with dummy S/N #070 was excluded. Upon review of the response traces after the test series was completed, it was noted that this test resulted in significantly lower abdominal and lumbar loads and larger rib displacements than in the remaining four tests. (See Appendix C, Figures C.10 through .18 of the Technical Report, Docket 18864–12, *supra*). Upon review, the data for that test indicated that impact contact with the abdominal offset block appear to have slightly favored the proximity of the lower rib rather than the middle of the abdomen, as had been the case in the subsequent four tests. This could have been caused either by a slight variation in the set-up of the dummy for the test or a slight posture realignment during the dummy's movement while approaching the impact surface. Inasmuch as the seating procedure was not varied and this aberration did not reoccur in the four subsequent tests, this test was considered to be a legitimate outlier.

ES–2re responses in flat wall and abdominal offset impacts are acceptable (generally in the order of ''excellent'').

1. Sample Size

Both the Alliance and Autoliv expressed concerns with the small sample size (n=2) of dummies used to establish repeatability and reproducibility of the ES–2re. The Alliance was concerned that only one dummy manufacturer was represented in the sample. The Alliance stated: ''In order to get a reasonable assessment of dummy repeatability and reproducibility, it is necessary to subject six dummies, of each combination, to the same series of tests.''

Agency Response: At the time NHTSA conducted its evaluation of the ES–2re, only one dummy manufacturer could provide NHTSA with production-ready samples of the dummy. That said, the agency nonetheless believes that the sample size (n=2) used for the NPRM was sufficient. The repeatability and reproducibility studies of the ES–2re described in the NPRM complemented the repeatability and reproducibility work previously conducted on the ES–2 dummy. The ES–2 has been used for testing and research purposes in Europe, the United States and elsewhere for years and has proven repeatable and reproducible performance. The repeatability and reproducibility work on the ES–2re built on those earlier assessments of the ES–2 and showed that the ES–2 with the rib extensions had good to excellent repeatability and reproducibility.

At the same time, we recognize that valid data can potentially be gleaned from tests of additional ES–2re test dummies with regard to the certification corridors used to assess performance of the dummy. As explained later in this preamble, the agency has therefore used ES–2re performance data submitted by the Alliance and the SAE in determining the certification corridors of this final rule, since the inclusive database is based on a larger sample size of ES–2re tests.

2. Reproducibility of Pelvic Load Measurements

The Alliance expressed concerns ''relative to the reproducibility of the pelvic load measurement of the EuroSID-family of dummies.'' The commenter stated that it analyzed pelvic certification data provided by the SAE, studying the correlation between the internal and external loads measured in the pelvic impact certification test. The Alliance plotted the pubic symphysis load (internal loads) against the impactor force (external loads) and computed the coefficient of determination (R^2) for the relationship. The Alliance stated that the resulting R^2 values were low and therefore expressed concern ''* * *that the pelvic load measurement of the ES-families of dummies has a reproducibility issue.* * * ''

Agency Response: We disagree with the implication that there is a need to establish controls on the ratio of force input to output for the pelvis certification test. The R^2 is not a meaningful assessment in this case, because the external loads account for impact inputs through several portions of the dummy, such as friction of the dummy with the seat, lumbar spine shear, and compression of the flesh, whereas the pubic symphysis loading reflects internal loads between the two pelvis halves. Furthermore, the agency conducted an evaluation of the repeatability and reproducibility of the pelvis response in both certification and sled test environments (reference NHTSA–2004–18864–15 and –16, respectively). In certification testing (pendulum testing), the ES–2re dummies exhibited excellent repeatability and reproducibility for all response criteria. In the sled testing portion of the evaluation, both dummies displayed excellent repeatability and reproducibility when exposed to the flat-wall test condition. In the abdomen offset sled test condition, one dummy exhibited excellent repeatability, while the second dummy scored a good rating for repeatability. Taking the certification and sled test results both into account, the dummies' pelvis response provided excellent reproducibility. Given these findings, the agency has concluded that the reproducibility of the pelvic load measurement of the ES–2re test dummy is acceptable.

3. Sensitivity to Initial Conditions

The Alliance believed that the ES–2re exhibited ''an unacceptable sensitivity to initial conditions.'' Citing an OSRP sled test study, the Alliance contended, ''The results show differences in the deflection responses depending on whether or not a contact switch was taped to the arm * * * ''

Agency Response: In our review of the referenced OSRP study, we did not see a discussion indicating that the test parameters and setup procedures were reasonably controlled in a manner that would warrant comparison of the test results. The report offers no documentation of the dummy pre-test positioning, nor does it provide any analysis of the sled pulse or impact speeds. Variations in these conditions could produce the differences observed and would not indicate any deficiency with the ES–2re dummy. Furthermore, the addition of a contact switch to the dummy's arm is not specified in the FMVSS No. 214 test procedure. Thus, the effect, if any, of a contact switch on shoulder response is not an issue relevant to this rulemaking proceeding.

4. Rib Acceleration Response

Ferrari provided comments on the ES–2re's rib acceleration response in full-scale MDB tests. Ferrari said it observed ''anomalous'' peaks in the rib acceleration curves that happened between 67 and 73 ms after barrier impact with the vehicle. Ferrari provided plots of the upper, middle, and lower rib acceleration responses (Figures 1, 2, and 3 of the Ferrari submission). The plots indicated that secondary peaks exist in the time range between 67 and 73 ms after barrier impact with the vehicle. For the upper rib, the peak acceleration in this time range was approximately 400 g, while the peaks for the middle and lower ribs were on the order of 1,200 and 1,400 g. Ferrari believed the peaks are anomalous since ''the dummy is still far from the door'' during this time period, and thus the peaks ''are not the result of any contact of the dummy torso with the interior surfaces.'' Ferrari further stated that the ''anomalous'' rib acceleration peaks were coincident with an acceleration peak in the ''VB12 signal,'' which NHTSA assumes to be a reference to the lower spine acceleration. Ferrari suggested that the source of the anomaly is insufficient damping of the rebound motion of the rib. Ferrari did not indicate the filter specifications used in processing the data they analyzed.

Agency Response: NHTSA has reviewed the rib acceleration responses from a series of 10 sled tests conducted to evaluate the repeatability and reproducibility of the dummy's responses (reference NHTSA Technical Report, ''Repeatability and Reproducibility of the ES–2re Dummy in the Sled Test Environment,'' June 2004, NHTSA Docket No. 2004–18864–16). In this review, we did not observe any occurrence of a secondary peak similar to that described by Ferrari. Further, anomalous peaks did not occur in the data from the vehicle crash tests conducted in support of the FMVSS No. 214 NPRM (these data are discussed later in this preamble). We note also that some comments to the FMVSS No. 214 NPRM suggested that NHTSA should not adopt any injury criteria in FMVSS No. 214 associated with the ES–2re's resultant lower spine acceleration (for reasons unrelated to Ferrari's

comments). The agency will respond to this suggestion in the FMVSS No. 214 final rule. If the agency agrees with the suggestion, the ES–2re's lower spine acceleration will not be used in the FMVSS No. 214 compliance tests.

d. Directional Impact Sensitivity

The NPRM noted that limited testing of the ES–2re's thorax in oblique pendulum impacts indicated some sensitivity in the rib deflection and spine acceleration responses. The NPRM noted also that the European Enhanced Vehicle-safety Committee (EEVC)1 [16] had also found similar sensitivity in the ES–2's thorax rib compression measurements in oblique pendulum impact tests. However, NHTSA tentatively concluded in the NPRM that the pendulum test was not necessarily reflective of the dynamic interaction between impacted door and occupant during the crash event. In the pendulum test, the loading was imposed on the dummy's ribcage in a fixed, large oblique impact angle throughout the entire loading period as well as by an impactor that produced a very concentrated, localized loading to the ribcage. The agency stated that test data from our full scale crash tests did not indicate evidence of the sensitivity produced in pendulum type impacts. Comments were requested on whether dummy users have seen such effects in measured responses during full scale vehicle crash tests.

Citing research conducted by the Partnership for Dummy Technology and Biomechanics (PDB) (the PDB is an association of automobile manufacturers and equipment suppliers) and the OSRP, the Alliance expressed concerns over the ES–2re's response to oblique impacts. In contrast, Autoliv stated ''we do not feel that the effect of oblique loading on the ES–2 dummy rib deflection measurements in most full scale crash tests is significant.''

1. Impact Direction

According to the Alliance, the PDB conducted sled tests using a padded wall that could be rotated to provide impact angles of 0°, +15° (oblique front), or −15°, (oblique rear). Each test condition (0°, +15° and −15°) was repeated three times, with the ES–2, the ES–2re, and the WorldSID. The commenter stated that the PDB found that the ES–2re exhibited decreased peak rib deflections when impacted obliquely from the front (+15°), as compared to purely lateral impacts. The Alliance stated that PDB believed that the ES–2 and ES–2re are ''highly sensitive to changes in the angle of the impact surface,'' whereas, the Alliance stated, the WorldSID ''is much less sensitive to impact direction, which is especially important for oblique loading.''

Agency Response: There is no biofidelic standard for rib deflection response in oblique loading in the sled test environment that has been published and accepted by the biomechanics community. Thus, it cannot be determined that the ES–2re's response characteristics inadequately replicate the human rib deflection response in oblique loading, or that the WorldSID's response characteristics are a better match to this criteria than the response of the ES–2re. It could be that the ribs of a human occupant would respond differently to oblique loads than it would to lateral loads.

Moreover, NHTSA believes that the ES–2re's rib response in vehicle crash tests is fully satisfactory. Our analysis of the thoracic response of the ES–2re demonstrated that the dummy's thoracic responses provide valid data. See ''Comparison of title and date of ES–2 Driver Dummy in Lateral vs. Oblique Pole Impacts and ES–2re Driver and Passenger Dummies in FMVSS No. 214 Type MDB Crash Tests,'' (October 2006), placed in the docket for this final rule (Docket 25441). As discussed in the report, we analyzed crash data from oblique and perpendicular pole tests of a 1999 Maxima and a 2001 Saturn which were not equipped with side air bag systems. The rib deflections of the ES–2re in the driver's seating position were almost identical in the oblique and perpendicular pole tests. The rib deflections of the dummies were consistent in time and were of similar magnitude. There was no indication of flat-topping, binding or distortion of the deflection signal due to oblique loading. In addition, T1 driver lateral acceleration was consistent and did not show differences between oblique and perpendicular impacts.

While both the lower spine accelerations (T12) and the summed abdominal forces for the driver ES–2re were higher in the oblique pole test configuration, the oblique pole test was run at a higher impact speed than the perpendicular test (20 mph versus 18 mph), which likely increased the dummy based measurements. Also, in the oblique pole test, the lower part of the dummy torso appears to be loaded earlier in the crash event than in a perpendicular test, which indicates that the T12 and abdominal forces could be higher because initial loading is more through the lower part of the torso.

We also analyzed the measurements of the ES–2re in FMVSS No. 214 MDB tests of a 2001 Ford Focus, 2002 Chevrolet Impala equipped with a combo head/thorax side air bag for the driver, and a 2004 Honda Accord equipped with a thorax bag. Overall, the driver rib deflections were higher than the deflections for the rear passenger dummy. However, a different loading environment caused the lower rib deflections for the ES–2re in the rear seat as compared to the driver. Rib deflections showed a slow rise, and the peaks occurred about 10 milliseconds later than those of the driver dummy. The loading duration was also considerably longer. The passenger rib deflections were consistently lower towards the bottom of the ribcage.

For the Focus, the driver and rear passenger T12 accelerations were comparable. For the Impala and Accord, the rear passenger T12 acceleration was larger than that of the driver dummy. This difference could be attributed to the fact that both the Impala and Accord had a thorax side air bag for the driver position and none for the rear passenger position.

Use of the ES–2re dummy in vehicle crash tests did not indicate any detrimental effects due to shoulder design, such as rib flat-topping or distortion of signals, which, if such had occurred, would have showed that the shoulder had reached its limit for range of motion or had otherwise performed unacceptably due to a forward motion of the clavicles. Further, the data from the tests did not show any sensitivity to oblique loading in the dummy's abdomen. The passenger abdominal force for the Impala was very large compared to the driver abdominal force, but this was due primarily to large structural intrusions (the test film shows the arm rest intruding into the dummy in the MDB test). This indicates a localized loading through the abdomen for the Impala passenger (resulting in an off-loading condition for the chest and, thus, much lower rib deflection measurements as compared to the driver dummy). For the Accord, the passenger abdominal force was larger than the driver abdominal force, but the difference could be attributed to the presence of the side air bag in the driver position.

In conclusion, the data show that there is virtually no effect due to oblique loading in the ES–2re deflection readings in oblique pole tests as compared to perpendicular pole

[16] The steering committee of the EEVC is composed of representatives from European national governments. The EEVC conducts research in motor vehicle safety and develops recommendations for test devices and procedures that governments can decide to adopt into national regulations.

impacts, and no indication of sensitivity in MDB tests.

2. Rib Binding in ISO 9790 Tests

The Alliance stated that OSRP subjected the ES–2re to linear impactor tests using the ISO 9790, Thorax Test 2 methodology. Impacts were conducted at 0°; at forward oblique angles of +15° and +30°; and rearward oblique angles of −15° and −30°. The commenter stated that, when impacted at +30°, the ES–2re's rib deflection response exhibited a delayed onset and nearly 20 mm lower peak deflection as compared to the lateral (0°) impacts. ''These observations * * * lead the OSRP to conclude that the rib system of the ES–2re initially binds when impacted from an angle of 30 degrees forward of lateral.''

Agency Response: Rib binding is typically observed as a flat period in the displacement-time history of the rib response, which is referred to as ''flat-topping.'' Although the Alliance suggested that rib binding is occurring during the +30°oblique impact, the data provided by the Alliance do not exhibit any flat-topping in the rib deflection response. NHTSA has done testing with the ES–2re dummy similar to the impact tests conducted by the OSRP and has not observed a delayed onset such as that reported by the Alliance (referencing the OSRP tests). As stated in the preceding section, we have also concluded that crash test data do not indicate evidence of the magnitude of sensitivity produced in the pendulum type impacts. Thus, we do not concur with the OSRP's concern of rib binding when impacted obliquely in the ISO 9790 test procedure.

3. ISO 9790 Ratings for Lateral and Oblique Impacts

The Alliance compared the ES–2re's impactor force-time histories from the lateral and oblique impacts to the corridor published for ISO 9790 Thorax Test 2. The commenter stated that there is a ''fair'' rating for the lateral impacts (biofidelity score = 5) and an ''unacceptable'' rating for the oblique forward impacts (biofidelity score = 0).

Agency Response: The Alliance's comments again question the dummy's oblique response characteristics. As previously explained, NHTSA believes that the ES–2re's rib response in vehicle crash tests is fully acceptable for this rulemaking effort. Crash test data indicate that there is virtually no effect due to oblique loading on the driver ES–2re deflection readings in oblique pole tests as compared to perpendicular pole impacts. Furthermore, the ES–2re represents a significant improvement in biofidelity as compared to the SID and SID–HIII dummies currently specified for use in FMVSS No. 214. NHTSA's biofidelity evaluation using the Biofidelity Ranking System indicated that the ES–2re is superior to the SID–HIII. OSRP's research also supports this conclusion in that it has shown that the ES–2re is superior to the SID using the ISO biofidelity evaluation methodology. The ES–2re can also detect critical loading by intruding vehicle structures at the head and lower torso levels that are undetected by the SID. Adopting the ES–2re and the injury assessment reference values associated with the risk of injury to occupants will substantially enhance the safety of occupants in side impacts.

e. Durability

Autoliv concurred with NHTSA in concluding that the ES–2re has ''good durability and withstands high severity loading.'' In contrast, citing a statement in the Part 572 NPRM regarding replacement of parts in full-scale crash testing (69 FR at 55556), the Alliance expressed concern that the ES–2re required replacement of ribs after ten full-scale vehicle crash tests, whereas ''[i]t is usual for a Hybrid III 50th or 5th to endure approximately 25 full vehicle crash tests before requiring a full rib set replacement.''

Agency Response: The durability of the ES–2re is fully acceptable. NHTSA conducted an extensive evaluation of the ES–2re dummy, which exposed two dummies to 10 rigid-wall sled tests and 5 repeats of each certification test. In addition, one dummy was exposed to increased severity component tests, designed specifically to assess the durability of the ES–2re. In this testing, the proposed certification test procedures were followed, except the impact energies were increased by as much as 30 percent. The increased energy levels were achieved by performing the certification tests at higher velocities. The dummy was exposed to three repeats each of the increased severity neck and lumbar tests; and five repeats each of the shoulder, abdomen, and pelvis tests (reference NHTSA Technical Report, ''Evaluation of the EuroSID–2re Certification Test Repeatability and Reproducibility,'' July, 2004, NHTSA Docket Number 2004–18864–15). Next, both dummies were subjected to severe thoracic impacts with a 23.4 kg impactor at 6.7 m/s in the development of a proposed full-body thorax impact test procedure (reference NHTSA Technical Report ''Development of A Full-Body Thorax Certification Procedure and Preliminary Response Requirements for the ES–2re Dummy,'' Sept. 2004, NHTSA Docket Number 2004–18864–17). One dummy was subjected to 5 exposures and another was subjected to 15 impacts.

Throughout these evaluations described above, the components of each dummy were inspected for any instance of excessive wear or failure. The dummies did not exhibit any observable component damage or failure.[17]

Finally, in addition to the tests described above, the ES–2re was subjected to 14 pole test exposures and 14 vehicle crash (MDB) test exposures without significant durability problems. Both dummies required one new shoulder foam mid-way through the test series. Also, one dummy required the replacement of a rib displacement transducer that failed for reasons not known, and the other dummy needed a new skin suit and one rib after intruding interior components cut through the skin suit and damaged the skin and foam of the rib. Collectively, these observations lead to the conclusion that the durability of the ES–2re dummy is fully acceptable for its intended use in FMVSS No. 214.

f. Symmetry

The NPRM explained that NHTSA believed that the ES–2re dummy will perform equally well, upon appropriate conversion when struck on either side, i.e., in both driver (left) side and passenger (right) side crash tests. The agency noted that predecessor test dummy to the ES–2re (the EuroSID–1) has been and still is being used in England, Japan and Australia for right side impacts. The EuroSID–1 has the same left to right side impact conversion provisions as the ES–2re. The agency explained that the agency's ES–2re users manual (the Procedures for Assembly, Disassembly and Inspection) (''PADI'') discusses the steps needed to be taken to convert the dummy for use from the left to the right side of the vehicle.

The Alliance expressed concern for symmetry of the ES–2re's abdomen response, i.e., the dummy's ability to provide similar responses when impacted on the right and left sides. The Alliance, referring to a 2002 Stapp paper by Byrnes, et al., stated: ''armrest forces

[17] In response to a specific comment made by the Alliance, it should be noted that dummy component durability is not a simple function of the number of tests conducted. Test severity is a much more significant factor in determining component life. Any dummy, be it an ES–2re or a Hybrid III 50th dummy, may require rib replacement after a single test if the test severity is substantial or the structural and/or occupant protection systems do not sufficiently attenuate the energy distribution of the crash.

from the right side impacts in Abdomen Test 2 were approximately 40% higher than those from the left side.''

Agency Response: In the 2002 Stapp study cited by the Alliance, thorax impacts and abdomen drop tests were conducted with the ES–2 (standard version) dummy. Tests were conducted with the dummy configured for left or right side impacts to evaluate the symmetry of the ES–2. (From review of the paper, it is not possible to determine the quantity of tests conducted for each configuration.) The paper concluded that the ES–2 provided symmetrical responses in the thorax tests and in Abdomen Test 1.

NHTSA does not believe that the Byrnes study definitively identifies a shortcoming with the dummy's reversibility characteristics. Variations observed in Abdomen Test 2 were attributed to ''a higher variability in the test procedure.'' The report noted, ''The difference observed * * * can be partially explained by the increased variability due to greater drop distance. Since the dummy had further to fall, it is more susceptible to rotating prior to impact with the armrest.''

Additionally, the agency conducted tests to evaluate the symmetry of response. In the study, the ES–2re dummy was configured for right side impacts and certification tests were performed with the head, neck, abdomen, lumbar, and pelvis, as well as a full-body thorax impact. The results indicated that the ES–2re dummy was fully capable of meeting the certification response requirements when configured for right side impacts, as well as left side impacts. Accordingly, all data indicate that the dummy performs well when used on either side of the vehicle.

g. Using the ES–2 Test Dummy

ES–2re v. ES–2

The Alliance supported the ES–2 dummy as a temporary alternative test device, pending the availability of WorldSID. The Alliance supported the ES–2 because the dummy is already implemented in both EuroNCAP and the UN ECE-regulation 95.02 Supplement 1, i.e., ''at least the ES–2 is harmonized with Europe and already in widespread use.''

Agency Response: The ES–2re is more appropriate for use in FMVSS No. 214 than the ES–2 dummy. As explained above in this preamble, and in the May 2004 FMVSS No. 214 NPRM and in the September 2004 NPRM preceding this final rule, the ES–2 dummy has a deficiency that limits its usefulness in FMVSS No. 214. The agency determined that, in a number of vehicle crash tests, the back plate of the ES–2's upper torso grabbed into the seat back of the vehicle, which lowered the rib deflections measured by the dummy. (''Design, Development, and Evaluation of the ES–2re Side Crash Test Dummy,'' May 2004, NHTSA Docket No. 17694–11.) This ''back plate grabbing'' problem has long existed in the ES–2 line of dummies. Although efforts were undertaken to address the problem in dummies preceding the ES–2, the back plate grabbing problem has continued with the ES–2. Back plate grabbing has been seen within the ES–2 in the non-governmental European New Car Assessment Program (EuroNCAP) on side impact. EuroNCAP accounts for the problem by adjusting downward the consumer rating scores of vehicles when back plate grabbing is deemed to have occurred.

The ES–2re has rib extensions that solve the back plate grabbing problem of the ES–2. The rib extensions provide a continuous loading surface that nearly encircles the thorax and encloses the posterior gap of the ES–2 ribcage that was responsible for the ''grabbing'' effects. Test data show that the rib extensions reduced the back plate grabbing force to insignificant amounts in vehicle side impact tests that had previously yielded large back plate loads with the ES–2. The rib extensions did not affect rib deflection responses in tests of vehicles that had not originally yielded high back plate loads.

As discussed above, we have found the biofidelity, repeatability, reproducibility, and other aspects of the ES–2re to be fully acceptable. In short, considering all aspects of the ES–2re and ES–2 dummies, we conclude that the ES–2re dummy should be incorporated into FMVSS No. 214 rather than the ES–2.

The ES–2re Should Measure More Than HIC

While supporting the ES–2 over the ES–2re, the Alliance stated that both test dummies have design features that affect the dummies' thoracic responses and the resulting rib deflection measurements. According to the commenter, the ''limited stroke piston/cylinder mechanism'' of the dummies can bind in a lateral impact, and the ''binding potential is further compounded as the lateral impact becomes more oblique.'' Further, as discussed above in this preamble, the Alliance also objected to the shoulder design and abdomen and pelvis of the ES–2re and ES–2. The commenter said that NHTSA should just require manufacturers to meet a head protection criterion, and not criteria assessing injury to the thorax, abdomen or pelvis.

We are denying this request. As discussed previously, NHTSA analyzed response data from matched pairs of oblique and lateral pole tests with two non-air bag equipped vehicles. In doing so, NHTSA determined that the rib deflection responses in both oblique and purely lateral tests were consistent in time and similar in magnitude. The agency concluded that there is virtually no effect due to oblique loading in the driver ES–2re deflection readings in oblique pole tests as compared to perpendicular pole impacts. The data also do not demonstrate an indication of sensitivity to oblique loading in MDB tests. In sum, the data show that there are no deficiencies with the ES–2re that would justify limiting its injury assessment to that of HIC only. To the contrary, the test data from the Impala test show that the abdominal response of the ES–2re in the rear passenger position in the MDB test detected critical loading by intruding vehicle structures at the lower torso level. In a NASS study of side impact crashes, it was estimated that between 8.5 percent and 21.8 percent of all AIS 3+ injuries are to the abdomen of restrained near side front seat occupants. (Samaha, R.S., Elliot, D., ''NHTSA Side Impact Research: Motivation for Upgraded Test Procedures'', 18th International Technical Conference on the Enhanced Safety of Vehicles Conference (ESV), Paper No. 492, 2003.) Adopting the ES–2re and the injury assessment reference values associated with the risk of injury to an occupant's thorax, abdomen and pelvis will enhance the safety of occupants in side impacts.

h. Test Dummy Drawing Package

As set forth in the NPRM, the ES–2re test dummy is specified by way of a drawing package, parts list, user manual (PADI), and performance certification tests. The two-dimensional drawings and the PADI ensure that the dummies are the same in their design and construction. The performance certification tests serve to establish the uniformity of dummy assembly, structural integrity, consistency of impact response and adequacy of instrumentation. The repeatability of the dummy's impact response in vehicle certification tests is thereby ensured.

Both DATD and the Alliance expressed concerns regarding the lack of 3-dimensional (3–D) shape definitions and material specifications for the dummy. Additionally, FTSS and DATD suggested corrections to perceived errors present in the drawing package. These comments are addressed below.

1. 3–D Shape Definitions

DATD requested that NHTSA specify 3–D patterns, either physical or electronic, for all complex dummy parts. The Alliance contended that the ''current drawing package does not contain adequate detail for suppliers to manufacture comparable dummies. To allow multiple manufacturers to produce interchangeable parts and dummies with consistent performance, NHTSA must provide a drawing package that is sufficiently specific, including manufacturing tolerances. The drawing package for the ES–2re does not contain 3–D surface models.''

Agency Response: We are denying the request to provide three-dimensional patterns to specify the dummy. The ES–2re drawings are comparable in detail to all other dummies previously incorporated into 49 CFR part 572. No dummy specification in part 572 contains three-dimensional patterns. This is because three-dimensional patterns are unnecessary in inspecting whether the dummy is acceptable for use in an agency test. The agency finds two-dimensional drawing specifications sufficient to assure proper anthropometry, composition and assembly, and functionality of the dummy in designated crash tests.[18]

The drawing package sets forth the criteria that the agency uses to determine acceptability of the dummy through an inspection process. The drawing package alone is not sufficient to manufacture a dummy, or to ensure the interchangeability of parts between dummies manufactured by different business entities. Although the agency does not provide three-dimensional drawings, shape dimensions are provided in the form of surface widths, lengths, and circumferences. The drawing package specifies features that are important to establish the appropriate anthropometry and composition of the dummy. The test device is typically intended to be representative of a segment of an identified population, e.g., small adult females or mid-size adult males. Accordingly, the dimensions and mass of the dummy are specified to ensure that the dummy physically represents the population intended. The dimensions, mass distribution and range of motion of dummy parts are also specified to ensure that the kinematics of the test device in a crash test replicates that of the human occupant and to assure that the dummy's instrumentation performs as intended. The PADI document also provides procedures for a dummy's assembly and disassembly during inspection. The document insures that a dummy is assembled properly for conducting the tests.

The performance specifications that are set forth in 49 CFR part 572 establish the impact response requirements for the dummy. To determine the acceptability of a dummy, the dummy is inspected for its conformance to the drawing package and is tested according to the certification tests in part 572. The agency conducts impact tests for individual body segments and their assemblies, and on the dummy as a whole to determine acceptance. The impact calibration tests and associated instrumented measurements address the accuracy and consistency of dummy responses in crash events.

The two-dimensional drawings, PADI document and impact performance requirements enable the establishment of an objective, repeatable test device. Dummies reflecting the configuration of the parts and their assemblies contained in these drawings have been successfully used for the development and evaluation of occupant protection systems in a variety of simulated and full-scale crash tests. Use of the two-dimensional drawings limited to minimal but critical specifications affords dummy manufacturers an amount of flexibility to generate their own manufacturing and process drawings and to use whatever procedures are needed to facilitate production, which would be constrained if the drawings and other specifications were specified such as by use of three-dimensional patterns. Such restrictions in the design and production of the test dummy by government regulation is unnecessary, may impede technology development and manufacturing innovation, and may increase the costs of test dummies and crash tests. If manufacturers want more explicit design and manufacturing specifications and construction instructions to enable them to interchange parts among different test devices, the dummy manufacturers could work with or through technical societies and manufacturer associations to attain their desired objectives.

For the aforementioned reasons, the agency is not specifying three-dimensional patterns for the dummy parts.

2. Material Specifications

DATD stated that numerous drawings lacked sufficient specification of materials necessary to manufacture a reproducible dummy. DATD recommended that NHTSA provide performance-based specifications for all materials.

Agency Response: On Aug. 2, 2005, NHTSA met with representatives of DATD to allow the manufacturer to clarify their comments regarding the ES–2re drawing package. The DATD comments were provided electronically on August 22, 2005 in PDF format and have been submitted to the docket (reference NHTSA–2004–18864–33 and 34). NHTSA and DATD reviewed a number of drawings and DATD provided feedback to explain why the material specifications were inadequate. DATD stated that many of the material specifications listed in the NPRM drawing package referenced non-standard, European, and/or British material specifications. DATD recommended appending numerous material specifications with the qualifying phrase ''Or Equivalent.''

DATD is correct that many of the material specifications referenced European standards, in part due to the European origin of the ES–2re. Material suppliers in the United States typically do not certify their materials to meet the European standards. Thus, maintaining European specifications could potentially force U.S. dummy manufacturers to obtain materials at a higher cost.

Appending the material specifications with ''Or Equivalent,'' as DATD suggests, could potentially provide the dummy manufacturers with the opportunity to use alternate materials that are functionally equivalent to the European-specified materials. However, the agency is concerned that the phrase ''Or Equivalent'' is open to wide interpretation. For example, would the phrase ''Or Equivalent'' mean that two materials must have the same chemical structure or physical properties? What differences, if any, are allowed between two ''equivalent'' materials and how would differences be quantified? On the other hand, NHTSA is concerned about maintaining material specifications that cannot be readily satisfied by all of the dummy manufacturers. Further, NHTSA believes that dummy manufacturers, in the case of European-based material and surface finish specifications, should have some latitude in material selection based on functional, density and stiffness similarities, so long as the final

[18] Although two-dimensional drawing specifications are sufficient for agency rulemaking purposes, we will explore the feasibility of developing three-dimensional scans for future research and development purposes. Furthermore, for a period of 180 days following publication of this final rule, we will have available for public inspection two (2) of the ES–2re dummies used by the agency in the development of the rule. To make arrangements to inspect these dummies, contact Dr. Bruce Donnelly at NHTSA's Vehicle Research and Test Center, P.O. Box B37, East Liberty, Ohio, 43319, or by telephone at 1–800–262–8309.

product meets the drawing package specifications and dynamic certification requirements in 49 CFR Part 572.

To provide the flexibility for use of either European materials or U.S. based materials that meet the European specifications, the agency has changed the material ''requirements'' to material ''references.'' In this way, the drawing package can provide a starting point for material selection, but the materials referenced in the drawings are not required to be used as long as the materials used for the dummy provide functional, density and stiffness similarities enabling the device to meet the drawing package specifications and the dynamic performance requirements in the 49 CFR Part 572 certification tests. This is the case even if the materials used are not identical to the material references listed on the individual component drawings. Accordingly, the agency has changed all material and finish specifications to ''material reference'' and ''finish reference.''

3. Dummy Drawing Changes

DATD and FTSS suggested corrections or other changes to over 50 drawings in the ES–2re drawing package. Almost all of these were minor changes. The suggestions are discussed in detail in Appendix A to this preamble, ''Specific Drawing Comments and Agency Responses to Those Comments.'' NHTSA generally concurs with the recommended changes to the drawings, except for DATD's suggested change to Drawing 175–1010 on the upper neck load cell replacement, and FTSS's suggested change to Drawings 175–4040, –4041 and –4042 on damper springs. Appendix A explains the reasoning behind each of our decisions on the drawings.

i. Certification Procedures and Response Corridors

The performance certification tests in this final rule serve to assure that the ES–2re responses are within the established biomechanical corridors and further assure the uniformity of dummy assembly, structural integrity, consistency of response and adequacy of instrumentation. The tests ensure the repeatability of the dummy's impact response in vehicle compliance tests.

The agency proposed certification tests for components of the ES–2re dummy (for the head, neck, thorax, and lumbar spine) and tests for local areas (the shoulder, abdomen, and pelvis) of a fully assembled seated dummy. The agency also explored adopting a full-body thorax certification test in addition to or instead of individual rib module tests.

1. Overview of the Comments

The Alliance, DATD, FTSS and Autoliv commented on the proposed certification procedures and response corridors.

The Alliance stated that the Alliance and the Society of Automotive Engineers (SAE) Dummy Testing Equipment Subcommittee (DTESC) have agreed to accept, with minor suggested changes, the proposed tests for the head drop, shoulder, thorax (rib module drop test), and abdomen because the test protocols and corridors for those tests ''are essentially the same as those specified in the ECE–R95 European Side Impact Regulation.'' The Alliance stated that the SAE DTESC determined that it was necessary to establish a larger database of component certification data for the proposed neck pendulum, lumbar spine and pelvis tests, and solicited that ''committee members submit fairly recent and representative test data'' for these tests ''in order to establish a larger database that will better represent the certification performance of these components in the field.'' The Alliance provided the data that the SAE DTESC obtained, and supported the NPRM's proposed corridors and protocols for the neck pendulum, lumbar spine, and pelvis certification tests, as modified by the suggestions of the SAE DTESC. (Hereinafter, comments of the Alliance that reflect the SAE DTESC suggestions are referred to as comments of the ''Alliance/SAE.'')

In its comment, Denton ATD claimed that the certification corridors published in the NPRM do not adequately reflect lab-to-lab differences.

FTSS provided specific comments regarding the test procedures and corridors. Because FTSS participated in the SAE activities that resulted in that organization's recommended certification corridors which were submitted by the Alliance (i.e. the Alliance comments), the FTSS comments on certification corridors have been subsumed in the Alliance/SAE comments.

Regarding the proposal for a full-body thorax impact certification procedure, Autoliv, FTSS, and the Alliance expressed a preference to retain the individual rib drop certification tests.

General Agency Response: To develop the certification corridors set forth in the NPRM, NHTSA subjected two ES–2re dummies to certification type tests at the agency's Vehicle Research and Test Center (VRTC) laboratory. The certification response data submitted by the Alliance/SAE in docket comments are based on a much larger sample size than that used for the NPRM and are statistically more significant and representative of the dummies' response. Additionally, the Alliance/SAE data were collected at several test laboratories and thus reflect lab-to-lab differences. In most cases, the Alliance/SAE data are normally distributed and exhibit reasonable amounts of variation. For these reasons, the agency has accepted most of the suggested Alliance/SAE response corridors, particularly if the agency's data did not indicate contradictions or if the suggested corridors were consistent with the ECE ES–2 performance specifications. However, there were a few instances where analysis of the SAE data either revealed a non-normal distribution of the data set based on different dummy makes, or were in substantial contradiction with comparable agency measurements. In those cases the agency considerably reviewed and analyzed the data to determine if the varying distributions of the tested populations could be reconciled. If they could not be, the suggested corridor was not accepted.

2. Head Drop Test

The NPRM proposed that the nominal mass of the ES–2re head assembly is 4.0 kg and the tolerance is +/−0.2 kg. The Alliance/SAE was concerned that the +/−0.2 kg head mass tolerance on drawing 175–0000 (sheet 2 of 6) is too large.

Agency Response: We agree that the original tolerance for the head mass, as originally specified in the EU regulation, is too broad and needs to be revised. A review of other similarly sized dummies regulated by NHTSA shows that the Hybrid III small adult female dummy (49 CFR Part 572, Subpart O) has a nominal head mass of 3.73 kg and a tolerance of +/−0.05 kg, while the Hybrid III mid-sized adult male (49 CFR Part 572, Subpart E) has a nominal mass of 4.54 kg and a tolerance of +/−0.05 kg. To maintain consistency with the other similarly sized Part 572 dummies, we are adopting a mass tolerance of +/−0.05 kg for the head segment.

3. Neck Flexion Test

i. *Neck Response Corridors.* The Alliance/SAE recommended adopting the following criteria for the neck pendulum test shown in the Table 4, ''Alliance/SAE Suggested Neck Response Criteria,'' below (note: NPRM corridors are shown for comparison):

TABLE 4.–ALLIANCE/SAE SUGGESTED NECK RESPONSE CRITERIA

Criteria	Alliance/SAE proposal	NPRM
Max. Neck Flexion Angle	49–59 deg	52–57 deg.
Time at Max. Flexion Angle	54–66 ms	54–64 ms.
Time of Decay to Zero Angle from Peak	53–88 ms	55–75 ms.

Agency Response: The SAE DTESC database includes 189 tests of necks from both Denton ATD and FTSS, and tested in both right and left-side impact conditions.

The SAE DTESC data appear to be normally distributed for the first two criteria (maximum flexion angle and time of maximum flexion angle). Because the data are evenly distributed, and given that the Alliance/SAE's proposed corridors are based on a much more statistically significant sample size and therefore better represents the broader dummy population, we have adopted the suggested corridors for maximum flexion angle and time of maximum flexion angle. We note that these flexion angle and associated time requirements are consistent with the latest ECE regulations.[19]

The data for the time of decay criteria appear to exhibit two slightly different populations. Analysis of the decay time data reveals a difference in response between the FTSS and DATD samples. The DATD samples yielded an average decay time of 76.97 ms, while the FTSS samples had an average decay time of 60.38 ms, a difference of 21.6 percent in the average response. However, the decay time has less significance in the neck performance characterization than, for example, maximum neck flexion and time of maximum neck flexion. The latter is to assure that the neck, as a result of a specified impact, will deliver the head to a given location, whereas the former assures that the head does not remain in the fully flexed position and is capable of restitution to the pre-flexed position within a repeatable time frame.

The agency's test data on which the NPRM's neck response corridors were based used FTSS neck assemblies because those were the only samples available at the time. Accordingly, the agency data are somewhat more similar to the FTSS data. Since the DATD impact velocity was within the range of impact velocities specified in the NPRM, we conclude that the DATD decay time data are valid. The data supplied by the Alliance/SAE represent a larger sample size of necks from both FTSS and DATD, and therefore is more representative of the total dummy population. Accordingly, we agree to expand the performance corridor of the decay to zero angle from maximum flexion from 55–75 ms to 53–88 ms.

ii. *Neck Pendulum Aluminum Honeycomb.* The test procedure specifies that the neck-headform assembly is attached to a pendulum test fixture. Section 572.183(b)(3) referenced a ''Figure 15 of part 572'' in describing the pendulum accelerometer. Figure 15 specifies a 6-inch thickness of honeycomb. The Alliance/SAE noted that ''It is not clear that the proposed pulse can be achieved using a 6-inch thick piece of aluminum honeycomb.'' The commenter suggested that a 3-inch aluminum honeycomb thickness should be specified for the neck pendulum test.

Agency Response: We concur that the NPRM incorrectly referenced Figure 15. The Alliance/SAE is correct in stating that the proposed pulse cannot be achieved using a 6-inch thickness of honeycomb. As specified in the ECE regulations and confirmed by VRTC testing, a 3-inch thickness of honeycomb is needed to achieve the pulse. The correct reference is to Figure 22 in subpart E of 49 CFR Part 572. Figure 22 does not specifically identify the thickness of the aluminum honeycomb. This final rule makes the correction.

iii. *Neck Pendulum Deceleration Filter Class.* The Alliance recommended filtering the neck pendulum acceleration data at CFC 180, as opposed to CFC 60 as proposed in the NPRM.

Agency Response: We do not agree with this change. The preliminary certification procedures published by the dummy manufacturer, and used by the agency in its evaluation, specified a CFC 60 filter for the pendulum acceleration. All of the data gathered by NHTSA in its evaluations have been processed using CFC 60. This filter is consistent with that specified for the Hybrid III 50th male dummy in subpart E. In addition, the Alliance/SAE recommended corridors that this final rule adopts were based on data filtered at CFC 60.

iv. *Nodding Block Configuration.* The Alliance stated that the proposed regulatory text did not specifically mention the ability to change nodding joints[20] in the neck in the event that the neck does not meet the certification requirements. The Alliance stated: ''The different nodding joints for the ES–2re dummy are identified in the drawing package, but are not noted in the NPRM.''

Agency Response: The proposed regulatory text did not specifically note the ability to change nodding joints in the neck when the neck does not meet the certification requirements. However, the text specifically stated that, ''The neck assembly consists of parts shown in drawing 175–2000.'' Drawing 175–2000 (Neck Assembly) contains a note indicating that the buffers are to be selected based on the certification response of the neck. Thus the ability to change buffers to meet the certification requirements is available and no change to the regulatory text is necessary.

v. *Adjusting Half-Spherical Neck Screws.* A comment by the Alliance regarding the adjustment of the lumbar cable nut of the dummy (see section IV.h.5, *infra*) led NHTSA to determine that the regulatory text should specify how the two half-spherical screws located at either end of the ES–2re's neck should be tightened. Using the test procedures in the ES–2's user's manual, but adding to them to improve their objectivity, the agency has determined that the half-spherical screws should be tightened to a torque of 88 in-lbs using a special neck compression tool, a type of which is described in NHTSA drawing 175–9500.

4. Thorax

i. *Full-Body Systems Test.* The NPRM proposed that the dummy's thoracic response would be evaluated by testing each individual rib module mounted in a drop test fixture. It was proposed that each rib module would be disassembled from the dummy, mounted in a drop rig

[19] The NPRM had proposed to eliminate four of the neck test response criteria used by the ECE regulations: peak fore pendulum base angle, peak aft pendulum base angle, and their respective times at which the peak occurred. It is noted that the sum of the fore and aft base angles is equal to the maximum flexion angle, a response requirement maintained in the NPRM. In proposing to eliminate these minor requirements, NHTSA sought to simplify the certification requirements. NHTSA did not receive any comments objecting to the proposal. Accordingly, the approach of the NPRM is adopted.

[20] We assume that the ''nodding joints'' noted in the Alliance comment refers to ''neck buffers'' since the ES–2 series dummies do not have nodding joints in the neck assemblies.

fixture, and impacted in free fall by an impactor with a mass of 7.78 kg. The impactor would be dropped from a height of 459 and 815 mm to produce impact speeds of 3.0 m/s and 4.0 m/s, respectively. The response criteria established the minimum and maximum deflection of the rib at each impact speed. For each rib (upper, middle, and lower rib), the proposed rib deflection for the 3.0 m/s impact would be 36 to 40 mm, and for the 4.0 m/s impact 46.0 to 51.0 mm.

The agency also explained that it was considering, in addition to or in lieu of the rib drop test, a test that addresses the performance of the thorax of the dummy as a complete system. The agency developed a test in which the thorax of a seated dummy is impacted by a pendulum at a specified impact speed. The proposed procedure was described in a report entitled, ''Development of a Full-Body Thorax Certification Procedure and Preliminary Response Requirements for the ES–2re Dummy, September 2004'' (in Docket 18864). A rib deflection range would be specified as part of the test requirements. The agency stated in the NPRM that a ''systems'' test of the thorax is used in calibration tests of all frontal impact and side impact dummies currently specified in 49 CFR part 572.

Autoliv, FTSS, and the Alliance preferred the individual rib drop certification tests and did not support the full-body thorax impact test. FTSS commented that the proposed 6.7 meters per second (m/s) impact velocity was ''a severe test and the hard face of the pendulum is likely to reduce the effective life of the foam material bonded to the ribs.'' FTSS recommended that a more appropriate impact speed than the proposed 6.7 m/s impact velocity would be in the range of 5.0 m/s to 6.0 m/s. FTSS also expressed concern that the systems test could allow too much variation in individual rib performance. ''The individual rib could have differing stiffnesses, but meet the specifications of the whole body test. This can result in higher variability and limit the accuracy of the ES–2re to discern local hard spots in the vehicle interior and structure.'' The Alliance stated that the individual rib drop test procedure ''was well established and appropriate for characterizing the performance of individual rib modules.''

Agency Response: NHTSA believes that a thorax systems test is important to assess that the final assembly of the dummy is correct. The test procedures for the Hybrid III, SID, WorldSID, and SID–IIs crash test dummies employ a thorax systems test, and so too should those of the ES–2re to further check the assemblage of the dummy. However, the test procedures for full-body thorax impacts of the SID, WorldSID, and SID–IIs side impact dummies employ a thorax impact speed of 4.3 m/s, as compared to the 6.7 m/s impact speed proposed in the NPRM for the ES–2re. After reviewing the comments, NHTSA has concluded that the impact severity proposed in the NPRM was at too high a severity (being much higher than that for other side impact dummy thoracic certifications).

In response to the comments, the agency conducted a study to determine the appropriate velocity for the test. The agency's follow-on study is discussed in a technical report entitled, ''Development of a Reduced Severity Full-Body Thorax Certification Procedure and Response Requirements for the ES–2re Dummy,'' (December 2005) (copy in the docket for this final rule, Docket 25441). Impact speeds of 4.3 m/s, 5.0 m/s, 5.5 m/s and 6.0 m/s were evaluated.

NHTSA has concluded from the test series and analysis that the appropriate impact speed should be 5.5 m/s. Because the test is to assure the integrity of the dummy's thorax in the FMVSS No. 214 crash tests, the agency determined that the test should use an impact speed that resulted in rib deflections near the magnitude of the proposed injury criteria for the ES–2re dummy (44 mm) in the FMVSS No. 214 final rule. The test speed of 5.5 m/s resulted in peak displacements of 41.9 mm for the lower rib, 43.6 mm for the middle rib, and 40.3 mm for the upper rib. Considering that the agency also sought to reduce the test severity from that which was proposed to a speed comparable to that used in thorax systems tests of other crash test dummies, it was concluded that the rib responses of the ES–2re were satisfactorily close to the desired displacement target. (The 5.5 m/s test speed reduced the kinetic energy imparted to the dummy through the impactor by approximately 33 percent.) The 5.5 m/s speed also was within the range suggested by FTSS in its comments to the NPRM.

We have also determined that the thorax systems test should be in addition to the individual rib module drop test. The individual rib module drop test would be retained because, as FTSS noted, the test could discern anomalies with individual ribs that the thorax systems test might not detect.

ii. *Specifying Impact Speed in Rib Module Drop Test.* The Alliance and FTSS expressed concern with specifying impact velocity as opposed to drop height in the rib module drop test procedure. FTSS noted, ''traditional velocity measurement methods in a dummy lab use speed vanes attached to the impactor and static light traps. This system works well for pendulum type impactors because the pendulum has approached a constant velocity at the bottom of its swing at the point of contact. However, a vertical drop (impactor) is still accelerating (at the instant it would pass through a traditional speed measuring device).'' Thus, it would not be possible to accurately measure speed at the instant of impact in a drop test.

Agency Response: The agency agrees with the FTSS analysis. Specifying a drop height facilitates the accuracy of the procedure. Section 572.185 of the regulatory text specifies that each rib is tested at two impactor drop heights, 815 ±8 mm and 459 ±5 mm.

iii. *Recovery Time Between Successive Tests.* The Alliance noted that the NPRM did not specify a recovery time between successive rib module drop tests. The Alliance recommended ''adopting a five (5) minute rib module recovery time between changes in velocity and a thirty (30) minute rib module recovery time between velocity sequences (as are called out in the ECE–R95 Regulation).''

Agency Response: NHTSA agrees that the test procedures should specify a recovery time between tests. In conducting its own research to evaluate the certification test procedures and performance corridors, NHTSA allowed a five-minute recovery time between changes in velocity (drop height) when testing a given rib module in a test cycle. If a test cycle had to be repeated on a given rib module, a recovery time of 30 (thirty) minutes was allowed between successive applications of the test cycle. These provisions have been added to the rib module drop test procedures.[21]

5. Lumbar Spine

The lumbar spine test involves attaching a lumbar spine/headform assembly to the bottom of a pendulum and releasing the pendulum from a height sufficient to allow it to fall freely to achieve an impact velocity of 6.05±0.1 m/s. (The headform is a

[21] We note that the proposed test procedures in the NPRM did not specify a recovery time for any successive tests with the same component, even though recovery times are always employed in dummy test procedures. We have adopted a provision in section 572.189 of the regulatory text of this final rule that states that certification tests of the same component, segment, assembly, or fully assembled dummy shall be separated in time by a period of not less than 30 minutes unless otherwise specified.

convenient and available ballast from the neck pendulum test set-up to evaluate the consistency of lumbar spine flexion properties.) The pendulum deceleration pulse is to be characterized in terms of its change (decrease) in velocity as obtained by integrating the pendulum accelerometer output. The lumbar spine must meet specified limits on the maximum lumbar spine flexion angle, time period in which maximum lumbar flexion angle must occur, and the time required for the lumbar flexion angle to decay to zero after peak.

i. *Response Corridors.* The Alliance/SAE recommended adopting the following criteria for the lumbar spine pendulum test in Table 5, ''Suggested Lumbar Response Criteria,'' below (note: NPRM corridors are shown for comparison):

TABLE 5.—SUGGESTED LUMBAR RESPONSE CRITERIA

Criteria	Alliance/SAE proposal	NPRM
Max. Lumbar Flexion Angle	45–55 deg	45–55 deg.
Time at Max. Flexion Angle	39–53 ms	39–53 ms.
Time of Decay to Zero Angle from Peak	37–56 ms	40–65 ms.

Agency Response: The SAE DTESC database includes 123 tests of necks from both FTSS and Denton ATD. The agency data base has been expanded since the NPRM to at least 25 sets of certification tests (see Supplement to the Technical Report: Design, Development, and Evaluation of the ES–2re Crash Test Dummy, November 2005; Docket 25441).

The Alliance/SAE data appear to be normally distributed and reflect reasonably similar dispersions between the two dummy makes, particularly for the first two criteria (maximum lumbar flexion angle and time of maximum lumbar flexion angle). The analysis of these data confirmed a good match with the agency data and the proposed performance corridors of 45–55 degrees for maximum flexion angle and 39–53 ms for time at maximum flexion angle.

On the other hand, the Alliance/SAE data for time to decay from peak angle to zero are somewhat separated in clusters: one for FTSS dummies being shorter in time and the other for Denton dummies being longer. The Alliance/SAE suggested through the Alliance comment that a 37.1–55.8 ms decay time corridor was appropriate, based on plus or minus two standard deviations of the combined data sets. Analysis of the agency's enlarged data set, based on two FTSS dummies, revealed that it matches nearly perfectly at +/−3 standard deviations the SAE DTESC suggested calibration corridor at the lower end of the limit (37 ms) and falls well within the corridor at the upper end at 46 ms. This dispersion confirmed the adequacy of the Alliance/SAE data set for analysis of the FTSS dummy. Inasmuch as the agency did not have any Denton dummies to establish their dispersion range, it had to use the SAE DTESC Denton-based data to establish the upper end of the corridor. Statistical analysis of the Denton dummy data revealed that its upper limit should to be set at 57 ms (56.8 ms rounded off). In summary, time of decay criteria from peak angle to zero angle is revised from the proposed 40–65 ms range to 37–57 ms. The limit of 37–57 ms agrees with the limits derived by combining response data from all dummies regardless of their make or test facility.[22]

ii. *Lumbar Cable Nut Adjustment.* The Alliance noted that the NPRM did not specify how the lumbar cable nut is adjusted, and recommended that a cable adjustment procedure should be specified since this is common practice for other dummy types that have neck and lumbar components that contain a cable and tensioning nut configuration.

Agency Response: The agency agrees with the suggestion. Historically, it has been common practice for NHTSA to specify torque requirements in 49 CFR Part 572 for fasteners that may potentially play a critical role in the certification responses. The neck test procedures for the Hybrid III 50th percentile male, 5th percentile adult female, six-year-old child, and three-year-old child all contain adjustment torque requirements for the cable nut.

The agency has reviewed the ES–2 User's Manual provided by the manufacturer and which was used by VRTC in performing its evaluation of the ES–2re states. The manual specifies that ''* * * the nut should be tightened hand tight and further tightened with two complete turns of the nut * * *.'' Using this procedure, but adding to it to enhance its objectivity, we have determined that the lumbar hex nut (part number 9000057) should be tightened to a torque of 50 +/−5 in-lbs. We have added this specification to the test procedure for the lumbar spine test (section 572.187(b)(2) of the regulatory text of this final rule).

6. Shoulder

The impact test is performed on the shoulder area of a fully assembled, seated dummy. A 49 CFR Part 572, Subpart E pendulum (23.4 kg) impacts the dummy laterally (the dummy's midsagittal plane is perpendicular to the direction of impact). The impactor swings freely to impact the dummy's upper arm pivot at a velocity of 4.3 m/s. The shoulder passes the test if the peak acceleration of the impactor is between 7.5 and 10.5 g.

i. *Shoulder Cord Tension.* In its comments, the Alliance stated that ''the ECE–R95 regulation applies a 27.5 to 32.5 N chord tension specification for the elastic shoulder cords. This setting should be included in the Part 572 test procedure since it is critical to the test.''

Agency Response: We have agreed to the recommendation, with modification. We conducted the shoulder impact test using the proposed procedures, including the shoulder cord tension specification of 27.5 to 32.5 N. In our assessment, one aspect of the ECE–95 regulation needed to be more objective. The October 1, 2004 revision of ECE–R95 specifies in Section 5.7.1.: ''The length of the elastic cord should be adjusted so that a force between and including 27.5 and 32.5 N applied in a forward direction 4 +/−1 mm from the outer edge of the clavicle in the same plane as the clavicle movement, *is required to move the clavicle forward.*'' [Emphasis added.] We have modified the highlighted phrase to state: ''* * * '' is required to initiate a forward motion of 1 to 5 mm.'' The modified statement is more specific and objective.

ii. *Pendulum Configuration.* FTSS commented that it does not recommend the use of an 8-wire pendulum system for conducting the shoulder impact certification test. FTSS stated, ''We have tested with both a 4-wire and 6-wire

[22] The NPRM had proposed to eliminate four of the lumbar test response criteria used by the ECE regulations: peak fore pendulum base angle, peak aft pendulum base angle, and their respective times at which the peak occurred. In proposing to eliminate these requirements, NHTSA sought to simplify the certification requirements. NHTSA did not receive any comments objecting to this proposal. Accordingly, the approach of the NPRM is adopted.

pendulum suspension system, and did not measure a detectable difference (in response). We do not recommend the use of an 8-wire system which over-constrains the lateral motion of the pendulum which is a factor in the shoulder test.''

Agency Response: In the NPRM, NHTSA provided specifications for the impact probe's mass, geometry, and inertial properties and did not specify the configuration of the suspension cables. This final rule does not specify the configuration of the suspension cables because we do not believe that the configuration will affect the results of the certification tests. The configuration of the suspension cables is not specified in other 49 CFR Part 572 test dummy regulations as the impactor could also be a linear impact probe.[23]

7. Abdomen

This calibration test is performed on a fully assembled, seated dummy. The abdomen has to meet performance requirements when impacted laterally at 4.0 m/s by a 49 CFR Part 572, Subpart E, 23.4 kg pendulum. Figure U5–A of the proposed regulatory text described the pendulum's impact face material as ''rigid.''

FTSS commented that most dummy labs use a bolt-on interface attached to the standard thorax pendulum. The commenter stated that, to conform to the weight specification for the pendulum, it typically uses a material of lower density than the aluminum used for the main pendulum. FTSS stated that it has observed differences in the pendulum acceleration depending on the choice of material used for the interface and further believes a specification of ''rigid'' is too vague. FTSS recommended that the agency specify the material for the abdomen probe face as ''Delrin.''

Agency Response: We used the term ''rigid'' to describe the impactor face to specify a material that was harder than that being struck (i.e., the dummy's abdomen). However, we concur that the impactor face should be more fully specified. NHTSA used a Delrin impactor face to conduct the abdominal tests. Rather than specifying a particular brand of plastic or using the term ''rigid'' in describing the impactor face, this impactor is characterized in this rule in the following manner.

The abdomen impactor is the same as specified in § 572.189(a) except that on its impact surface is firmly affixed a special purpose rectangular shaped block whose weight is 1.0 +/-0.01 kg. The block is 70 mm high, 150 mm wide and 60 to 80 mm deep. The impact surface is flat, has a minimum Rockwell hardness of M85, and an edge radius of 4 to 5 mm.

8. Pelvis

This calibration test is performed on a fully assembled, seated dummy. The dummy pelvis is impacted by the 49 CFR Part 572, Subpart E, 23.4 kg pendulum at a velocity of 4.3 m/s. The NPRM proposed certain minimum and maximum limits on the impact force measured by the pendulum accelerometer and on the pubic force measured by the dummy.

The Alliance commented on the pelvis impact response corridors, recommending criteria for the pelvis impact test based on SAE DTESC data from 111 tests conducted with dummies from both Denton ATD and FTSS. The commenter suggested the following criteria for the pelvis impact test in Table 6, ''Suggested Pelvis Response Criteria,'' below (note: NPRM corridors are shown for comparison):

TABLE 6.—SUGGESTED PELVIS RESPONSE CRITERIA

Criteria	Alliance proposal	NPRM
Max. Impactor Force	4.7–5.4 kN	4.8–5.5 kN.
Time at Max Impactor Force	11.8–16.1 ms	10.3–15.5 ms.
Peak Pubic Symphysis Load	1.23–1.59 kN	1.31–1.49 kN.
Time at Peak Pubic Symphysis Load	12.2–17.0 ms	9.9–15.9 ms.

Agency Response: The SAE DTESC data appear to be normally distributed. Because the data are evenly distributed, and given that the Alliance/SAE's suggested corridors are based on a more statistically significant sample size and wider impact speed distribution than that used for the NPRM, the agency agrees that the Alliance proposal reflects a more representative response of a broader dummy population. Accordingly, the Alliance's suggested corridors are incorporated into this final rule. Review of the NHTSA data used to support the NPRM corridors indicates that all responses would meet the commenter's suggested corridors.

9. Other Issues

i. *Test Probe Suspension Cables and Attachments.* FTSS recommends adding additional specifications to the test probe used in the shoulder, abdomen, and pelvis impacts, as follows:

- Mass moment of inertia shall be greater than 9000 kg-cm^2
- Natural frequency shall be greater than 1000 Hz
- The weight of 1/3 of the suspension cables should be added to the pendulum weight
- Cable attachment hardware should not exceed 5% of the total pendulum weight
- Suspension cables shall not interfere with the dummy during the test

Agency Response: The suggested specifications for mass moment of inertia and natural frequency were proposed in § 572.189(a) of the NPRM and are adopted in this final rule. NHTSA agrees with adding the latter suggested specifications. As noted by the commenter, the provisions are typically part of the regulations for test dummies adopted in recent years (e.g., 49 CFR Part 572, Subpart O, Hybrid III 5th Percentile female frontal test dummy). Including the weight of ⅓ of the suspension cables prevents the use of unusually heavy suspension cables, which could affect the response of the dummy. The last provision will help eliminate a potential source of variability. We have clarified in the regulatory text (§ 572.189(a)) that ''No suspension hardware, suspension cables, or any other attachments to the probe, including the velocity vane, shall make contact with the dummy during the test.''

ii. *Pelvis and Abdomen Pendulum Filter Requirements.* Section 572.189(k)(1) specified using an SAE J211 CFC 60 filter for the pendulum acceleration of the pelvis impact test. The correct specification is to a CFC 180

[23] It is noted that, in response to a comment from FTSS, this final rule limits the overall weight of the suspension cables and specifies that the weight of the suspension cables is included in calculating the total impactor mass. These specifications and others are discussed in section IV.h.9 of this preamble.

filter. NHTSA used a CFC 180 filter for the pendulum acceleration of the pelvis impact test. This final rule makes the correction.

iii. *Temperature.* The NPRM explained that, while the 18° C to 26° C (64.4° F to 71.6° F) temperature range is specified for the EuroSID–1 by EU in 96/27/EC and for the ES–2 by EEVC in EuroNCAP side impact tests, NHTSA tentatively concluded that the ES–2re's temperature at the time of calibration, sled and full scale crash tests be in the range of 20.6° C to 22.2° C (69° F to 72° F). This temperature range is specified for all NHTSA Hybrid III series and SID/HIII dummies, and, NHTSA stated, reduces the variability of the dummy's impact response due to temperature sensitivity of damping and rubber and plastic materials used within the dummy.

The Alliance found the proposal to be acceptable. No commenter opposed it. Accordingly, this final rule adopts the specification.

V. NHTSA Crash Test Experience

The agency conducted a series of vehicle crash tests utilizing a broad variety of passenger vehicles. The test program method and results are discussed in detail in a technical report entitled, ''NHTSA Fleet Testing for FMVSS 214 Upgrade, MY 2004–2005, January 2006,'' which has been placed in the docket for the final rule published today (Docket 25441).

The objectives of the test program were to evaluate the dummy's responses in different loading conditions with respect to the injury assessment reference values (IARV) proposed in the May 17, 2004 NPRM on FMVSS No. 214, to assess the dummies' durability, and to investigate the crashworthiness characteristics of a broad range of fleet vehicles. The series consisted of fourteen FMVSS No. 214 vehicle-to-pole tests and seven moving deformable barrier (MDB) tests. In the MDB tests, ES–2re dummies were seated in both the driver and rear passenger positions, resulting in 14 total MDB exposures with ES–2re dummies.

Each dummy was instrumented with load cells, accelerometers, and potentiometers as listed in Table 7, ''Instrumentation and Filter Classes,'' below.

TABLE 7.—INSTRUMENTATION AND FILTER CLASSES

Location	Type instrument	Measurement	Direction	CFC	Total channels
Head (9-array)	accelerometers	Acceleration	X, Y, Z	1000	9
Upper Neck	load cell	Force	X, Y, Z	1000	3
		Moment	X, Y, Z	600	3
Lower Neck	load cell	Force	X, Y, Z	1000	3
		Moment	X, Y, Z	600	3
Shoulder	load cell	Force	X, Y, Z	600	3
Upper Spine (T01)	accelerometers	Acceleration	X, Y, Z	180	3
Lower Spine (T12)	accelerometers	Acceleration	X, Y, Z	180	3
Ribs (upper, middle, lower)	potentiometers	Displacement	Y	180	3
	accelerometers	Acceleration	Y	180	3
Back Plate	load cell	Force	X, Y	600	2
		Moment	Y, Z	600	2
T–12	load cell	Force	X, Y	600	2
		Moment	X, Y	600	2
Lumbar	load cell	Force	Y, Z	600	2
		Moment	X	600	1
Abdomen (front, middle, rear)	load cell	Force	Y	600	3
Pubic Symphysis	load cell	Force	Y	600	1
Pelvis	accelerometers	Acceleration	X, Y, Z	1000	3
Femurs, Left and Right	load cell	Force	X, Y, Z	600	3
		Moment	X, Y, Z	600	3

Table 8, ''Full Scale Vehicle Test Matrix,'' below, describes the vehicle test matrix. All vehicles were 2005 model year versions, unless otherwise noted. Vehicles were selected to reflect a broad range of sizes and masses. Note that the Dodge 2500 Ram Pickup test was repeated, with the air bag being deployed manually in the second test (denoted as Dodge 2500–B).

TABLE 8.—FULL-SCALE VEHICLE TEST MATRIX

Vehicle	Side air bag type [1]	Oblique pole	MDB
Toyota Corolla	C + T	√	√
VW Jetta	C +T	√	√
Saturn Ion	C	√	√
Honda Accord (MY 2004)	C +T	√	√
VW Beetle Convertible	H + T	√	
Saab 9–3 Convertible	H + T	√	
Ford 500	C + T	√	√
Toyota Sienna (MY 2004)	C + T	√	
Subaru Forester	H + T	√	√
Honda CRV	C + T	√	√
Chevy Colorado	C	√	
Ford Expedition	C	√	
Dodge 2500–A	C	√	

TABLE 8.—FULL-SCALE VEHICLE TEST MATRIX—Continued

Vehicle	Side air bag type [1]	Oblique pole	MDB
Dodge 2500–B	C	√	

[1] Side Air Bag Types: C = Curtain; H = Head; T = Torso

a. MDB Tests

Seven vehicles were tested in the FMVSS No. 214 MDB test mode with one ES–2re dummy seated in the driver's position and one in the left rear passenger's position. All of the measured responses for both the driver and rear occupant were below the proposed IARV limits. Only two measurements, rib deflection of the driver in the Honda CRV and Honda Accord, were greater than 80 percent of the proposed limits.

b. Oblique Pole Tests

Fourteen vehicles were tested in the proposed FMVSS 214 oblique pole impact mode. For this test, the ES–2re dummy is seated in the driver's position with the seat in mid-position and the dummy's head CG aligned with the center of the pole.

The HIC_{36} measurement exceeded the proposed limits in two of the tests (Subaru Forester and Dodge 2500–A) and was greater than 80 percent of the proposed limit in another (Saturn Ion). In the Subaru test, the air bag deployed but the head portion of the bag was directed towards the rear of the dummy and offered minimal protection to the dummy's head. In the Dodge 2500–A test, the air bag did not deploy; the test was subsequently repeated and the curtain air bag was manually deployed.

The ES–2re's rib deflection response exceeded the proposed limit in seven of the tests (Toyota Corolla, Saturn Ion, Honda CRV, Chevy Colorado, Dodge 2500–A and B, and Toyota Sienna) and was greater than 80 percent of the proposed limit in five other tests (VW Jetta, VW Beetle, Saab 9–3, Ford 500, and Subaru Forester).

The ES–2re's total abdomen force exceeded the proposed limit in four tests (Ford 500, Chevy Colorado, Dodge 2500–B, and Ford Expedition).

c. Rib Responses

The rib module design incorporated into the ES–2re was developed in response to concerns over of the EuroSID and ES–2 dummy's ribs binding. The rib binding was previously observed as a plateau in the rib's displacement-time history at peak deflection and has been referred to as ''flat-topping.'' The concern with rib flat-topping is that it would limit the ribs from full compression even under large loading conditions.

The rib response curves for all of the MDB and oblique pole impacts tests were analyzed to determine if any rib flat-topping occurred. There was no evidence of rib flat-topping in the test series.[24]

d. Torso Back Plate Responses

Another area of concern with the ES–2 dummy configuration was that of the torso back plate interacting with the vehicle seat frame. When this occurred, loads were transferred directly to the spine, preventing the load from being applied laterally to the rib cage, and thus potentially reducing the rib displacements. This undesirable feature is referred to as ''back plate grabbing.'' The rib extensions and narrow, curved back plate of the ES–2re were designed to address this issue.

In order to assess back plate-to-seat back interaction in the crash tests, torso back plate responses were monitored. A large positive y-component of the back plate force indicates that the back plate was experiencing a laterally inboard-directed force due to back plate-to-seat back interaction. In previous agency crash testing with the ES–2 (without rib extensions and narrow back plate) in which back plate-to-seat back interaction was observed, positive y-component back plate loads in the range of 5,000–12,000 N were recorded. Table 9, ''Peak Positive Lateral Back Plate Loads,'' below, summarizes the peak positive y-component of the back plate loads for the MDB and oblique pole tests.

TABLE 9.—PEAK POSITIVE LATERAL BACK PLATE LOADS

Vehicle	Positive Y-Component of Back Plate Load (N)		
	Oblique Pole	MDB	
	Driver	Driver	Passenger
Toyota Corolla	78	65	16
VW Jetta	81	62	80
Saturn Ion	226	158	105
VW Beetle Convertible	32		
Saab 9–3 Convertible	71		
Ford 500	41	118	4
Subaru Forrester	61	64	59
Honda CRV	588	203	29
Chevy Colorado	108		
Ford Expedition	20		
Dodge 2500–A	114		
Dodge 2500–B	32		
Honda Accord	51	182	40

[24] Non-normal rib deflection responses were noted in the Saturn Ion pole test. However, it was subsequently determined that the rib potentiometers had been incorrectly installed in the dummy's rib modules. This assembly error left the rib potentiometers with a reduction in the amount of available displacement. When assembled properly, the pots can provide 60 mm of free travel, whereas post-test inspection of the dummy indicated the assembly error had reduced the free travel to 48–50 mm of displacement. Deflection measurements up to 48–50 mm were still accurate for this test.

TABLE 9.—PEAK POSITIVE LATERAL BACK PLATE LOADS—Continued

Vehicle	Positive Y-Component of Back Plate Load (N)		
	Oblique Pole	MDB	
	Driver	Driver	Passenger
Toyota Sienna	103	.....	.....

As Table 9 indicates, the magnitude of the peak positive lateral back plate loads was very low and indicates that back plate grabbing did not occur.

e. Durability

As discussed above in section IV of this preamble, no significant durability problems were observed with the ES–2re dummies used in the NHTSA crash tests.

In conclusion, the ES–2re dummy performed in a satisfactory manner and demonstrated its usefulness as a test instrument in actual FMVSS No. 214 testing.

VI. Conclusions

For the aforementioned reasons, NHTSA has decided to amend 49 CFR Part 572 by adding design and performance specifications for the ES–2re 50th percentile adult male side impact dummy. The improved biofidelity and injury assessment capability of the ES–2re over other commercially available test dummies will enhance the assessment of the risk of injury in side impacts over that previously possible, particularly in side crashes involving the possibility of head or abdominal injury. Further, adopting the ES–2re into 49 CFR Part 572 is a step toward harmonizing our regulations internationally. The European New Car Assessment Program (EuroNCAP) on side impact uses the ES–2 dummy with the injury criteria specified in EU 96/27/EC. The agency is also cognizant of the efforts of the safety community to complete the evaluation of the WorldSID for side impact evaluation. By adopting the ES–2re at the present time, the agency is not precluding the incorporation of the WorldSID dummy. Furthermore, the agency is participating in the WorldSID's evaluation, and is committed to proposing the incorporation of harmonized 5th and 50th percentile dummies into the standard when the dummy development and evaluation are complete. Nonetheless, today's final rule ensures that the important gains in occupant protection that can be achieved by the ES–2re will not be delayed or lost pending completion of that evaluation.

Rulemaking Analyses and Notices

Executive Order 12866 and DOT Regulatory Policies and Procedures

Executive Order 12866, ''Regulatory Planning and Review'' (58 FR 51735, October 4, 1993), provides for making determinations whether a regulatory action is ''significant'' and therefore subject to Office of Management and Budget (OMB) review and to the requirements of the Executive Order. This rulemaking action was not considered a significant regulatory action under Executive Order 12866. This rulemaking action was also determined not to be significant under the Department of Transportation's (DOT's) regulatory policies and procedures (44 FR 11034, February 26, 1979). The cost of an uninstrumented ES–2re is in the range of $54–57,000. Instrumentation adds approximately $43–47,000 for minimum requirements and approximately $80–84,000 for maximum instrumentation to the cost of the dummy.

This document amends 49 CFR Part 572 by adding design and performance specifications for a 50th percentile adult male side impact dummy that the agency will use in research and in compliance tests of the Federal side impact protection safety standards. This 49 CFR Part 572 final rule does not impose any requirements on anyone. Businesses would be affected only if they choose to manufacture or test with the dummy. Because the economic impacts of this final rule are minimal, no further regulatory evaluation is necessary.

Regulatory Flexibility Act

Pursuant to the Regulatory Flexibility Act (5 U.S.C. 601 et seq., as amended by the Small Business Regulatory Enforcement Fairness Act (SBREFA) of 1996), whenever an agency is required to publish a proposed or final rule, it must prepare and make available for public comment a regulatory flexibility analysis that describes the effect of the rule on small entities (i.e., small businesses, small organizations, and small governmental jurisdictions), unless the head of the agency certifies the rule will not have a significant economic impact on a substantial number of small entities. The Small Business Administration's regulations at 13 CFR Part 121 define a small business, in part, as a business entity ''which operates primarily within the United States.'' (13 CFR 121.105(a)).

We have considered the effects of this rulemaking under the Regulatory Flexibility Act. I hereby certify that this rulemaking action will not have a significant economic impact on a substantial number of small entities. This action will not have a significant economic impact on a substantial number of small entities because the addition of the test dummy to Part 572 will not impose any requirements on anyone. NHTSA will not require anyone to manufacture the dummy or to test vehicles with it.

National Environmental Policy Act

NHTSA has analyzed this final rule for the purposes of the National Environmental Policy Act and determined that it will not have any significant impact on the quality of the human environment.

Executive Order 13132 (Federalism)

Executive Order 13132 requires agencies to develop an accountable process to ensure ''meaningful and timely input by State and local officials in the development of regulatory policies that have federalism implications.'' ''Policies that have federalism implications'' is defined in the Executive Order to include regulations that have ''substantial direct effects on the States, on the relationship between the national government and the States, or on the distribution of power and responsibilities among the various levels of government.''

NHTSA has analyzed this amendment in accordance with the principles and criteria set forth in Executive Order 13132. The agency has determined that this final rule does not have sufficient federalism implications to warrant consultation and the preparation of a Federalism Assessment.

Civil Justice Reform

This final rule would not have any retroactive effect. Under 49 U.S.C. 30103, whenever a Federal motor

vehicle safety standard is in effect, a State may not adopt or maintain a safety standard applicable to the same aspect of performance which is not identical to the Federal standard, except to the extent that the state requirement imposes a higher level of performance and applies only to vehicles procured for the State's use. 49 U.S.C. 30161 sets forth a procedure for judicial review of final rules establishing, amending, or revoking Federal motor vehicle safety standards. That section does not require submission of a petition for reconsideration or other administrative proceedings before parties may file suit in court.

Paperwork Reduction Act

Under the Paperwork Reduction Act of 1995, a person is not required to respond to a collection of information by a Federal agency unless the collection displays a valid control number from the Office of Management and Budget (OMB). This final rule does not have any requirements that are considered to be information collection requirements as defined by the OMB in 5 CFR Part 1320.

National Technology Transfer and Advancement Act

Section 12(d) of the National Technology Transfer and Advancement Act of 1995 (NTTAA), Public Law 104–113, section 12(d) (15 U.S.C. 272) directs NHTSA to use voluntary consensus standards in its regulatory activities unless doing so would be inconsistent with applicable law or otherwise impractical. Voluntary consensus standards are technical standards (e.g., materials specifications, test methods, sampling procedures, and business practices) that are developed or adopted by voluntary consensus standards bodies, such as the Society of Automotive Engineers (SAE). The NTTAA directs us to provide Congress, through OMB, explanations when we decide not to use available and applicable voluntary consensus standards.

The following voluntary consensus standards have been used in developing the ES–2re dummy:

- SAE Recommended Practice J211, Rev. Mar95 ''Instrumentation for Impact Test'' and
- SAE J1733 of 1994–12, ''Sign Convention for Vehicle Crash Testing.''

Unfunded Mandates Reform Act

Section 202 of the Unfunded Mandates Reform Act of 1995 (UMRA), Pub. L. 104–4, Federal requires agencies to prepare a written assessment of the costs, benefits, and other effects of proposed or final rules that include a Federal mandate likely to result in the expenditure by State, local, or tribal governments, in the aggregate, or by the private sector, of more than $100 million annually (adjusted for inflation with base year of 1995). Before promulgating a NHTSA rule for which a written statement is needed, section 205 of the UMRA generally requires the agency to identify and consider a reasonable number of regulatory alternatives and adopt the least costly, most cost-effective, or least burdensome alternative that achieves the objectives of the rule.

This final rule will not impose any unfunded mandates under the UMRA. This rule does not meet the definition of a Federal mandate because it does not impose requirements on anyone. It amends 49 CFR Part 572 by adding design and performance specifications for a side impact dummy that the agency will use to evaluate manufacturers' compliance with applicable Federal safety standards and for research purposes. This rule affects only those businesses that choose to manufacture or test with the dummy. It does not result in costs of $100 million or more to either State, local, or tribal governments, in the aggregate, or to the private sector.

Plain Language

Executive Order 12866 requires each agency to write all rules in plain language. Application of the principles of plain language includes consideration of the following questions:

—Has the agency organized the material to suit the public's needs?
—Are the requirements in the rule clearly stated?
—Does the rule contain technical language or jargon that is not clear?
—Would a different format (grouping and order of sections, use of headings, paragraphing) make the rule easier to understand?
—Would more (but shorter) sections be better?
—Could the agency improve clarity by adding tables, lists, or diagrams?
—What else could the agency do to make this rule easier to understand?

If you have any responses to these questions, please write to us about them.

Regulation Identifier Number

The Department of Transportation assigns a regulation identifier number (RIN) to each regulatory action listed in the Unified Agenda of Federal Regulations. The Regulatory Information Service Center publishes the Unified Agenda in April and October of each year. You may use the RIN contained in the heading at the beginning of this document to find this action in the Unified Agenda.

Appendix A to Final Rule Preamble: Specific Drawing Comments and Agency Responses to Those Comments

Drawing 175–0000, Sheet 2, EuroSID 2 With Rib Extensions

Issue: With regard to the center of gravity table for the head, the vertical CG direction is incorrectly specified. FTSS recommends that ''Y'' be replaced with ''Z.''

Analysis and Response: FTSS has correctly identified a minor error in drawing 175–0000, sheet 2. The correct label is ''Z.''

NHTSA has modified drawing number 175–0000, sheet 2 by changing the label for the head CG from ''Y'' to ''Z.''

Drawing 175–0000, Sheet 2, EuroSID 2 With Rib Extensions

Issue: DATD stated that for the Assembly Weights table, the sum of the individual segments does not equal the total weight shown in the table.

Analysis and Response: There is an error in the table. The correct total dummy weight should be 72.4 kg. This error was also present in the PADI and has been corrected in that document also.

NHTSA has modified drawing 175–0000, sheet 2, and Table 9.1 of the PADI to reflect the correct total mass of 72.4 kg.

Drawing 175–0000, Sheet 4, EuroSID 2 With Rib Extensions

Issue: DATD stated that in views A–A and D–D, there is no call-out provided for the fasteners to be used.

Analysis and Response: Denton's comments are accurate. Adding identification to the accelerometer screws would improve the quality of the drawing.

NHTSA has modified drawing 175–0000, sheet 4. In views A–A and D–D, add balloon callouts (Item 16) for the accelerometer mounting screws. We have modified the parts list to reflect a quantity of 30 for item 16. In addition, it is noted that the part number for item 18 is missing. We have modified the parts list to indicate a part number of 500025 for item 18.

Drawing 175–1000, Head Assembly

Issue: DATD stated that the reference line for the z-position of the center of gravity (CG) should be in line with the aluminum skull instead of the skin.

Analysis and Recommendation: Denton's comments are correct. The reference line should be even with the aluminum skull casting.

NHTSA has modified drawing 175–1000 by moving the reference line for the z-position of the CG from the surface of the skin to the surface of the skull casting.

Drawing 175–1010, Upper Neck Load Cell Structural Replacement

Issue: FTSS claims that the 2.53 dimension for the dowel pin installation height results in an unnecessarily tight tolerance. FTSS recommends using a one-decimal dimension of 2.5.

Analysis and Response: As shown on drawing 175–1010, a two-decimal dimension carries a tolerance of +/−0.05 mm, whereas a one-decimal dimension has a tolerance of +/−0.1 mm. The dowel pins are used to locate the head accelerometer mount and the slight increase in tolerance for their installation height will not result in any detrimental effects.

NHTSA has modified drawing number 175–1010 by changing the 2.53 dimension to 2.5.

Drawing 175–1010, Upper Neck Load Cell Replacement

Issue: As presently specified, the upper neck load cell replacement consists of three primary components: the upper, middle, and lower blanks. Denton ATD has requested an optional construction method whereby the part could be made as a one-piece unit.

Analysis and Response: Technically, there is no reason why the part could not be constructed as a one-piece unit as long as the dimensional, mass, and inertial properties are maintained equivalent to those of the originally specified three-piece unit. Denton ATD did not provide any data to substantiate that the mass and inertial properties are indeed equivalent to the three-piece unit. In the absence of such data, and considering the late date of the comment submission, it is not possible for NHTSA to determine if a one-piece construction would provide equivalent performance.

NHTSA has denied this request to allow an optional construction method for a one-piece unit of part number 175–1010.

Drawing 175–1011, Top Plate Upper Neck Load Cell Blank

Issue: FTSS claims that the 88.90 dimension is unnecessarily tight. FTSS recommends using a one-decimal dimension of 88.9.

Analysis and Response: The dimension in question defines the outer diameter of the upper neck load cell structural replacement. The slight increase in tolerance proposed by FTSS will not result in any detrimental effects. Furthermore, this part is assembled to part number 175–1012, Middle Plate UNLC Blank, to form the upper neck load cell structural replacement. The outer diameter of the middle plate (−1012) is specified at 88.9. Thus, it is consistent to specify the mating component, the top plate (−1011), similarly.

NHTSA has modified drawing number 175–1011 by changing the 88.90 dimension to 88.9.

Drawing 175–1012, Middle Plate UNLC Blank

Issue: FTSS claims the 6.97 and 17.24 dimensions are unnecessarily tight. FTSS recommends using one-decimal dimensions for each of these items: 7.0 and 17.2.

Analysis and Response: As shown on drawing 175–1012, a two-decimal dimension carries a tolerance of +/−0.05 mm, whereas a one-decimal dimension has a tolerance of +/−0.1 mm. The dimensions in questions specify the height, or thickness, of the plate. The minor changes suggested to the nominal thickness dimensions will have virtually no effect on the fit or external dummy dimensions. Additionally, the thickness of the Top Plate UNLC Blank (175–1011) is dimensioned using one-decimal dimensions, thus modifying 175–1012 will maintain consistency with the other components in the UNLC Blank Assembly.

NHTSA has modified drawing 175–1012 by changing the 6.97 and 17.24 dimensions to 7.0 and 17.2, respectively.

Drawing 175–1013, Bottom Plate UNLC Blank

Issue: FTSS claims that the 3.50, 0.50, and 6.40 dimensions are unnecessarily tight. FTSS recommends using one-decimal dimensions for each of these items.

Analysis and Response: As shown on drawing 175–1013, a two-decimal dimension carries a tolerance of +/−0.05 mm, whereas a one-decimal dimension has a tolerance of +/−0.1 mm. The dimensions in question define a clearance hole and countersink feature and thus do not require high-precision tolerances.

NHTSA has modified drawing number 175–1013 by changing the 3.50, 0.50, and 6.40 dimensions to 3.5, 0.5, and 6.4.

Drawing 175–2002, Neck Intermediate Plate

Issue: FTSS claims that the 6 dimension should be 6.0 and contends that note 2 is unnecessary and should be removed.

Analysis and Response: The dimension in question is a feature in the neck assembly into which one end of the neck buffer is inserted. A zero-decimal dimension carries with it a tolerance of +/−0.5 mm. This tolerance is too large to ensure proper retention of the neck buffer. Additionally, the other end of the neck buffer is inserted into the Neck Head and Torso Interface Plate (175–2003), which specifies the corresponding feature at 6.0. Thus, to maintain consistency with drawing 175–2003, the dimension should be changed to 6.0 on drawing 175–2002. Note 2 states ''Thread to conform to BS3643 & must be clear & free running.'' The only feature of the part which contains screw threads is the M12 Helicoil which is inserted into the center of the plate. Since a Helicoil is a purchased part which already contains threads, note 2 is essentially redundant.

NHTSA has modified drawing 175–2002 by changing the 6 dimension to 6.0 and by removing note 2.

Drawing 175–2003, Plate, Neck Head and Torso Interface

Issue: FTSS claims that the 84.00 dimension is unnecessarily tight and should be changed to 84.0.

Analysis and Response: The dimension in question defines the outer diameter of the component. The slight increase in the tolerance will not result in any detrimental effects.

NHTSA has modified drawing number 175–2003 by changing the 84.00 dimension to 84.0

Drawings 175–2010–1, –2015–1, and –2020–1, Neck Buffer Molded Shore 60/70/80 A

Issue: Each of the three prints specifies a durometer tolerance of +/−2. Denton ATD claims that such a tolerance is impractically tight and does not follow industry standard practice. DATD recommends a tolerance of +/−5.

Analysis and Response: A durometer tolerance of +/−2 is not practical given the expected variation typically associated with durometer measurement. The complicated shape of the buffer exacerbates this situation. A tolerance of +/−5 is more practicable.

NHTSA has modified drawings 175–2010–1, –2015–1, and –2020–1 to reflect a durometer tolerance of +/−5.

Drawing 175–3000, Shoulder Assembly

Issue: FTSS claimed that Item 17, Part Number 5000008 is incorrect and should be replaced with Part Number 5000014, Screw, SHCS M6 x 1 x 35.

Analysis and Response: Drawing 175–3000, as issued with the NPRM, specifies Item 17, Screw, SHCS M6 x 1 x 30. FTSS contends that the longer 35 mm screw will provide proper thread engagement. NHTSA agrees that the longer screw will improve thread engagement and does not foresee any interference problem that would result from using a longer, 35 mm screw.

NHTSA has modified drawing number 175–3000, replacing Part Number 5000008 with Part Number 5000014, Screw, SHCS M6 x 1 x 35.

Drawing 175–3003, Shoulder U Spring

Issue: FTSS recommends adding a note stating: ''Heat Treat: Harden and Temper to HRC 47 +/−2.''

Analysis and Response: As issued with the NPRM, drawing 175–3003 does not contain any notes regarding heat treat requirements. Inclusion of the proposed note would help to provide guidance, ensuring proper function of the unit.

NHTSA has modified drawing 175–3003 by adding the note ''Heat Treat: Harden and Temper to HRC 47 +/−2.''

Drawing 175–3011, Cam Buffer Pad

Issue: FTSS claims that the 5.0 hole requires a dimension to define its distance from the vertical edge of the part and recommends a requirement of 4.1.

Analysis and Response: As currently shown in drawing 175–3011, the distance between the two 5.0 holes is defined, however, their distance from the edge is not adequately specified. FTSS is correct in pointing out the need for a dimension to specify the location of the holes with respect to the edge of the unit.

NHTSA has modified drawing 175–3011 by adding a 4.1 dimension to specify the location of the hole relative to the vertical edge of the unit.

Drawing 175–3016, Shoulder Cam Clavicle Assembly

Issue: FTSS proposes that the note should be corrected as follows: ''Scratch clavicle before bonding and rough underside of buffer (item #2) 175–3011 with P60 grade paper.''

Analysis and Response: As issued in the NPRM, the note on drawing 175–3016 states: ''Scratch clavicle as shown before bonding rough underside of buffer (item #2) 175–3011 with P60 grade paper.'' The FTSS proposal intends to clarify the note since the drawing does not actually ''show'' where the clavicle is to be scratched. The intention of the note is to prepare the mating surfaces of the clavicle and the buffer to be bonded together, thus ensuring a durable bond. However, the proposed language of the note could be improved.

NHTSA has modified drawing 175–3016 by adding the following note: ''Prepare the mating surfaces of the clavicle (item #1) and buffer pad (item #2) by lightly abrading them with P60 grit sandpaper.''

Drawing 175–3017, Shoulder Cam Clavicle

Issue: FTSS proposes the following changes: dimension 25.00 +0/−.25 should be 24.7 +/−0.3; dimension 6.0 should be 5.8 +/−0.3; dimension 13.0 should be 13.0 +/−0.2; and dimension 4.6 is unclear and unnecessary.

Analysis and Response: The shoulder cam clavicle is a plastic molded part and therefore tight tolerances are harder to maintain. The changes proposed by FTSS will relax the tolerances but will not affect the functional performance of the parts. Also, the 4.6 dimension has no landmark or reference point and therefore it should be eliminated, as suggested by FTSS.

NHTSA has modified drawing 175–3017 as follows: changed dimension 25.00 +0/−0.25 to 24.7 +/−0.3; changed dimension 13.0 to 13.0 +/−0.2; changed dimension 6.0 to 5.8 +/−0.3; and deleted the 4.6 dimension.

Drawings 175–4011, –4012, –4013, and –4014, Linear Rib Guide Assembly

Issue: As currently specified, all of the dimensions on these parts are reference dimensions. Denton ATD suggests removing the parentheses around the dimensions, making them required dimensions.

Analysis and Response: DATD is correct in noting that the dimensions should be required dimensions.

NHTSA has modified drawings 175–4011, –4012, –4013, and –4014 by removing the parentheses, thereby making all of the dimensions required dimensions.

Drawings 175–4040, –4041, and –4042, Springs

Issue: As currently specified, the drawings specify a spring rate for each item, but do not provide any allowable tolerance for the spring rate. DATD suggests that a tolerance of +/−3% be applied to the spring rates. Additionally, DATD suggests a tolerance of +/−1 mm on all dimensions.

Analysis and Response: DATD is correct in noting that a spring rate tolerance is necessary. However, review of other spring drawings and research of typical spring rate tolerances used in other industries suggests that a tolerance of +/−3% is too restrictive. A more realistic tolerance would be +/−10%. Additionally, the spring rate tolerance does not supersede the certification requirements in the rib drop test and therefore adding such a tolerance to the print will have no effect on the functionality of the rib modules. With regard to the dimensional tolerance, NHTSA agrees that +/−1 mm on all dimensions is reasonable and practicable.

NHTSA has modified drawing 175–4040 by adding the following note: ''Spring rate tolerance: +/−1.6 N/mm.'' We have modified drawing 175–4041 by adding the following note: ''Spring rate tolerance: +/−1.4 N/mm.'' We have modified drawing 175–4042 by adding the following note: ''Spring rate tolerance: +/−1.9 N/mm.'' Also, we have modified all three drawings to reflect a tolerance of +/−1 mm for all dimensions.

Drawings 175–4040, 175–4041, and 175–4042, Damper Springs

Issue: FTSS proposes the inclusion of three additional springs with different stiffness for rib module tuning. To simplify the drawings, FTSS proposes the elimination of drawings 175–4041 and 175–4042 and the modification of drawing 175–4040 to add three additional damper return springs of varying stiffness (17.7, 20.3, and 21.6 N/mm) to offer additional tuning flexibility.

Analysis and Response: The ES–2re dummy's thorax response is primarily controlled by its three rib modules. Each rib module contains three components that influence their response: The damper, the stiff damper spring, and the damper return spring. The rib modules' performances are individually verified by conducting the rib module certification test. The current drawing package specifies three damper return springs of varying stiffness: 13.8, 16.4, and 19.0 N/mm. Dummy users are given the option of using any of the three springs as long as the rib modules meet the certification requirements specified in the rib module drop test. The various springs provide users with the ability to change springs as necessary to meet the certification response parameters.

Each of the primary components of a rib module (the damper, the stiff damper spring, and the damper return spring) contributes significantly to the overall system performance. NHTSA has tested extensively with the three springs that are presently specified in the

drawing package. However, NHTSA has no test experience with the three new springs proposed by FTSS. In order to determine the effect on the rib response of the three different springs proposed by FTSS, NHTSA would need to undertake an extensive study involving the three primary components. For example, it is entirely possible that a stiffer spring, suggested by FTSS, could mask other deficiencies such as unacceptable damper performance.

Given that FTSS's comments were received by the agency well after the published deadline for comments (FTSS's memo is dated Aug. 4, 2005) and considering the extensive research needed to qualify the performance of the proposed springs, the agency is unable to concur with the suggested change. Furthermore, FTSS did not provide any supporting data to substantiate the use of the newly proposed springs. We do not acknowledge a need for additional optional rib module springs since the three springs presently specified appear to provide sufficient flexibility. FTSS failed to demonstrate that the proposed springs are necessary or that they would offer any additional benefits such as improved durability, repeatability, or biofidelity. Accordingly, NHTSA is denying the request to incorporate three additional damping springs.

Drawing 175–4051, Damper Assembly

Issue: The drawing presently specifies that the damper body shall be welded to the damper bracket. DATD expressed concern that the heat required to weld the two units together could lead to damage of the damper and adversely affect its performance.

Analysis and Response: It is not in NHTSA's best interest to specify a process that could potentially adversely affect the performance of the unit. On the other hand, there is no indication that the process has affected damper performance in the past and thus it would not be proper to disallow the use of a welding process to join the two units. Accordingly, it would be practical to allow manufacturers to decide for themselves what process provides the best performance.

NHTSA has modified drawing 175–4051 by replacing the weld note with the following text: ''Attach item 1 and 2 securely to attain structural integrity of a monolithic body using appropriate mechanical method.'' In addition, we modified drawing 175–4053 by adding the following note: ''External body of the damper may be threaded to achieve mechanical attachment with the damping bracket as specified in 175–4051.''

Drawing 175–4052, Damper Bracket

Issue: FTSS proposes removing the note ''Masking Before Painting.''

Analysis and Response: The note is not critical to the fit or function of the part and removing it from the drawing will not compromise the performance of the dummy.

NHTSA has modified drawing 175–4052 to remove the note ''Mask Before Painting.''

Drawing 175–4053, Damper

Issue: FTSS contends that the overall length dimension of 193 +/−3 is inaccurate and should be 195.7 +/−3

Analysis and Response: NHTSA/VRTC inspected the several typical dampers and determined that the proposed dimension of 195.7 +/−3 is acceptable. However, it is noted that the tolerance proposed should maintain consistency with the nominal dimension in terms of the one-decimal place call-out.

NHTSA has modified drawing 175–4053 by changing the 193 +/−3 dimension to 195.7 +/−3.0,

Drawing 175–4057, Damper Bracket Clamp

Issue: FTSS proposes that the 16 and 8 dimensions should be 16.0 and 8.0.

Analysis and Response: The dimensions in question specify the clamp width and the location of a pair of through holes with respect to the edge of the clamp. Changing the dimensions to one-decimal place dimensions will reduce the allowable tolerance and ensure better reproducibility and fit.

NHTSA has modified drawing 175–4057 by changing the 16 and 8 dimensions to 16.0 and 8.0, respectively.

Drawing 175–4058, Damper Return Spring

Issue: DATD notes that the current drawing does not contain a tolerance for the spring rate listed in note 2. DATD suggests a value of +/−20%.

Analysis and Response: DATD is correct in noting that a tolerance on the spring rate is needed. The recommendation of +/−20% is reasonable and practicable.

NHTSA has modified note 2 of drawing 175–4058 by adding the tolerance ''+/−0.25 kN/m.''

Drawing 175–4060, Rib, Rear Bracket, Rib Extension

Issue: FTSS stated ''the tolerance and the bend angle are over-specified such hat the part could not be made.'' FTSS provided a drawing in their submission which describes the recommended corrections.

Analysis and Response: The drawing submitted by FTSS provides additional detail for fabricating the rib and therefore NHTSA must assume that FTSS intended to state that the tolerance and bend angle are ''under-specified'' as opposed to ''over-specified.'' In the proposed drawing, FTSS includes a dimension on the bend angle (89.0 +1.5/−1.0 degrees) and x- and y-dimensions for mounting hole locations. The additional detail provided will help to assure that the rib can be reproduced by multiple manufacturers.

NHTSA has modified drawing number 175–4060 to incorporate the additional dimensions and tolerances submitted by FTSS.

Drawing 175–5501, Lumbar Spine, Molded

Issue: FTSS claims to have studied ''a large sample of lumbar spines.'' According to the claim, FTSS states that the statistical analysis suggests the lumbar length should be 135 +/−2 mm instead of 136 +0/−3 mm.

Analysis and Response: The proposed change would effectively change the allowable lumbar length from 133–136 mm to 133–137 mm, thus allowing lumbar spines to be 1 mm longer. Review of the complete dummy's external dimensions (175–0000, sheet 3) indicates that only two dimensions could potentially be affected by the proposed change: the sitting height and the seat to lower face of thoracic spine box. However, it is noted that these external dimensions have tolerances of +/−9 mm and +/−5 mm, respectively, and therefore the proposed change would have little or no effect on the ability of manufacturers to meet those requirements.

NHTSA has modified drawing 175–5501 by changing the 136 +0/−3 dimension to 135 +/−2.

Drawings 175–6010 and –6002, Iliac Wing Assembly, Left and Right

Issue: FTSS proposes changing the 99.9 and 11.0 dimensions to 100 and 11, respectively. FTSS also proposes that note 3 should be modified to read: ''All Tolerance Other Than Mounting Hole Centers +/−1.''

Analysis and Response: The iliac wing assembly is a plastic molded part and as such tolerances of +/−0.1 are difficult to maintain. Therefore it is agreed that the 99.9 and 11.0 dimensions can be changed to 100 and 11, thus allowing the tolerances on those dimensions to be +/−0.5. With regard to the note 3, it is not clear that

note 3 is needed. There is only one dimension on the print, the 20.03 diameter, that is neither a reference dimension nor the location of a hole center. Therefore, it appears 3 can be removed.

NHTSA has modified drawings 175–6010 and –6002 to change the 99.9 and 11.0 dimensions to 100 and 11, and has deleted note 3.

Drawing 175–6012, Hip Pivot Pin

Issue: FTSS proposes the elimination of the 14.5 dimension and changing the 58 (reference) dimension to 58.0 +/−0.2.

Analysis and Response: Changing the overall length dimension of 58 from a reference dimension to an inspection dimension of 58.0 +/−0.2 eliminates the need for the 14.5 dimension.

NHTSA has modified drawing 175–6012 by removing the 14.5 dimension and changing the 58 dimension to 58.0 +/−0.2.

Drawings 175–6015 and –6020, Femur Buffer Assembly, Left and Right

Issue: The current print specifies that items 1 and 3 are attached using ''Tape, Acrylic, Double Sided.'' DATD suggests that ''equivalent'' materials be allowed for the bonding process.

Analysis and Response: As previously stated, the phrase ''equivalent'' is open to interpretation. However, it is not in NHTSA's best interest to maintain unnecessary material specifications. In this instance, the double sided tape listed in item 2 of the part list could be identified as ''reference'' and a note could be added stating ''Attach items 1 and 3 securely using appropriate bonding method.''

NHTSA has modified drawings 175–6015 and –6020 by adding the statement ''(reference)'' to item 2 in the parts list. We have also added the following note: ''Attach items 1 and 3 securely using appropriate bonding method.''

Drawing 175–6018, Plate, Femur Buffer

Issue: FTSS proposes that the 8 and 3 dimensions should be 8.0 and 3.0, respectively.

Analysis and Response: The subject item is part of an assembly used in the upper femur. Tightening the tolerances as FTSS proposes will help to ensure a good match between mating parts in the assembly.

NHTSA has modified drawing 175–6018 by changing dimension 8 to 8.0 and dimension 3 to 3.0.

Drawing 175–6041, Sacrum Cover Plate

Issue: The sacrum cover plate is used to mount and protect the pelvis accelerometers. DATD suggests modifying the drawing to allow a small cut-out that would be used for accelerometer cable routing, reducing the likelihood for pinching wires.

Analysis and Response: DATD did not show that the current design leads to damaged accelerometer wires, therefore it does not seem necessary to require a cut-out in the plate. However, the DATD suggestion is not unreasonable or impractical and thus it could be shown as an optional configuration.

We have modified drawing 175–6041 to show an optional cut-out for accelerometer cable routing.

Drawings 175–7000–1 and –2, Leg Assembly Left and Right

Issue: FTSS recommended that Item 23, Part Number 9000296, Washer, should be deleted.

Analysis and Response: FTSS has correctly pointed out an error in the NHTSA drawing package.

We have deleted part number 9000296, Washer from drawings 175–7000–1 and –2.

Drawings 175–7001–1 and –2 Lower Leg Assembly Left and Right

Issue: FTSS stated that the flesh component of the assembly should be specified as a separate item in the parts list and identified as part numbers 175–7003–1 and –2, Lower Leg Flesh, Left and Right, respectively.

Analysis and Response: NHTSA was unaware that the leg flesh was available as a separate part. Specifying the leg flesh as a separate part allows consumers to purchase the lower leg flesh separately, which is less expensive than purchasing the entire lower leg assembly.

NHTSA has incorporated drawings 175–7003–1 and –2, Lower Leg Flesh, Left and Right, into the drawing package. We have modified drawing 175–7001–1 and –2 to identify the 175–7003–1 and –2 as separate parts.

Drawing 175–7034, Foot Rib

Issue: FTSS stated that the 5/16″ cutout feature has been eliminated from the design and should be removed from the drawing.

Analysis and Response: The 5/16″ cutout feature is not critical to the design's performance and can be eliminated. Additionally, the cutout feature is shown in the foot weldment assembly drawing (175–3031) and should be deleted from that drawing, as well.

We have modified drawings 175–7034 and 175–7031 by removing the 5/16″ cutout feature in each drawing.

Drawings 175–7090–1 and –2, Thigh Molded, Left and Right

Issue: FTSS suggests adding a reference dimension of 174 for the width of the thigh flesh. FTSS also suggests changing Note 2 on drawing 175–7090–1 from ''+/−2 mm'' to ''+/−3 mm'' to be consistent with drawing number 175–7090–2.

Analysis and Response: As released with the NPRM, there is no dimension on the width of the thigh flesh. Because the proposed dimension would only be a reference value, the parts are not strictly required to meet the dimension and therefore the proposed change would not necessarily affect existing or future parts. The dimension could be useful to manufacturers as a reference check. With regard to Note 2, all of the dimensions on both 175–7090–1 and –2 are reference dimensions. As such, the parts are not strictly required to conform to the dimensional tolerances and therefore changing the tolerance to +/−3 mm will have no effect. Furthermore, it is desirable to maintain consistency with 175–7090–2.

NHTSA has modified drawings 175–7090–1 and –2 to add a reference dimension of 174 for the width of the thigh flesh, and has modified Note 2 of drawing 175–7090–1 to reflect a tolerance of +/−3 mm.

Drawing SA572–S29, Six Channel Femur Load Cell

Issue: The drawing specified by NHTSA in the NPRM is the same as that used for the femur load cell in the Hybrid III 5th female dummy. While the ES–2re femur load cell is dimensionally the same as that used in the 5th female, the weight of the load cell used in the ES–2re is less. FTSS recommends creating a new part number for the ES–2re Six Channel Load Cell using the same dimensional and functional specifications, except changing the weight specification to 1.87 lb (0.85 kg) max. In its comments, Denton ATD also submitted that the load cell should have a weight of 1.87 lb (0.85 kg) max.

Analysis and Response: NHTSA inspected the load cells used in their evaluations of the ES–2re dummy. It was determined that the load cells were, indeed, lighter than those specified for use in the Hybrid III 5th female.

We have generated a new femur load cell drawing to reflect the ES–2re femur load cell as recommended.

Drawing SA572–S70, Six Axis Upper Neck Load Cell

Issue: FTSS claimed that the three dimensional coordinate axis system is incorrect as the Y-axis should be

pointing in the opposite direction. Additionally, FTSS requested that the drawing should include the formulae to calculate the moments about the occipital condyle. FTSS recommended adding:

$M_{x,oc} = M_{x\ measured} + (0.02 \times F_{y\ measured})$
$M_{y,oc} = M_{y\ measured} + (0.02 \times F_{x\ measured})$

Analysis and Response: FTSS is correct in pointing out the error in the three-dimensional coordinate axis system. With regard to adding the formulae, there exists no current requirement for making the computations of neck moments about the occipital condyle. However, it is noted that the addition of the formulae does not impose any further requirements and thus can be added for reference purposes.

NHTSA has modified drawing SA572–S70 to show the correct orientation of the Y-axis in the coordinate system. We added the formulae under the title: ''Reference for Computing Moments about the Occipital Condyle. Units are Newtons for forces and Newton-meters for moments.''

EuroSID2 in Title Block

Issue: FTSS noted multiple drawings that contained the word ''EuroSID2'' in the title block. FTSS claims the official name is ''ES–2.'' The affected drawings are SA572–S70, SA572–S71–1, SA572–S71–2, SA572–S71–3, SA572–S72, SA572–S73, SA572–S74, SA572–S75, SA572–S76, and SA572–S77.

Analysis and Response: FTSS is correct in identifying the potential for confusion with the use of multiple references such as 'EuroSID2' and 'ES–2.' However, NHTSA has adopted the name 'ES–2re' to identify the dummy as the ES–2 with rib extension.

We have removed all references to ''EuroSID2'' from the drawing package and replaced them with 'ES–2re.'

Drawing SA572–S72, 3 Axis Shoulder Load Cell

Issue: FTSS claims that the weight specification is incorrect and should be 0.53 lbs (0.24 kg) max. DATD also suggested this specification in its comments.

Analysis and Response: As issued in the NPRM, drawing SA572–S72 specifies 0.47 lbs max. The FTSS proposal would increase the max weight by 0.06 lbs. NHTSA considers the proposed increase in maximum weight to be inconsequential to the overall assembled weight of the dummy.

We have modified drawing SA572–S72 to indicate ''Weight: 0.53 lbs/0.24 kg max.''

Drawing SA572–S73, 4 Axis Backplate Load Cell

Issue: FTSS states that the weight specification is incorrect and should be 2.80 lbs (1.27 kg) max. DATD also suggested this specification in its comments.

Analysis and Response: As issued in the NPRM, drawing SA572-–S73 specifies 6.83 lbs max. Upon further analysis, NHTSA determined that the 6.83 pound specification was established, incorrectly, by measuring the weight of the load cell and additional hardware. Upon learning of this mistake, NHTSA verified that the FTSS recommendation of 2.80 lbs maximum was appropriate.

We have modified drawing SA572–S73 to indicate ''Weight 2.80 lbs/1.27 kg max.''

Drawing SA572–S76, Lumbar Load Cell

Issue: FTSS states that the axes referenced in the load capacity specification are incorrectly labeled. FTSS recommends replacing ''F_x'' with 'F_y' and 'F_y' with 'F_z.' Also, FTSS states that the weight specification is incorrect and should be 0.57 lbs (0.26 kg). DATD suggests a weight specification of 0.59 lbs (0.27 kg).

Analysis and Response: FTSS is correct in pointing out the error with regard to the F_y and F_z axes. As issued in the NPRM, the drawing contains a weight specification of 0.55 lbs (0.25 kg). The FTSS suggestion would increase the weight specification by 0.02 lbs, while the DATD request would only increase the weight by 0.04 lbs. NHTSA considers the proposed increase in maximum weight to be inconsequential to the overall assembled weight of the dummy.

We have modified the drawing by correctly identifying the F_y and F_z axes and by changing the weight specification to indicate: ''Weight: 0.59 lbs/0.27 kg.''

Drawing SA572–S77, Pubic Load Cell

Issue: FTSS claims that the specification for crosstalk is inadequate. In their comments, FTSS is concerned with bending loads applied to the load cell being reported as compressive loads. FTSS recommends an additional requirement be added to the drawing indicating ''Moment Crosstalk Error < 5% Full Scale at Applied M_x/M_y Moments of 4000 in-lbs./452 Nm.'' DATD, which also manufactures the load cells, independently provided the same comment, requesting that a moment crosstalk error of less than 5% be placed on the drawing.

Analysis and Response: Crosstalk is measured during the load cell calibration process. When a load is applied exclusively to one channel, the other channels of the load cell are monitored to determine if they are (incorrectly) measuring a response. The pubic load cell is a single-axis load cell and therefore is calibrated only by applying a load along its single sensitive axis. In a strict interpretation, it is not possible to measure crosstalk on a single axis load cell because there are no other channels to monitor when the load is applied along the single sensitive axis. FTSS is proposing that a moment load (of 4,000 in-lbs) be placed on the load cell while monitoring the compressive load channel. There exists a precedent for this type of requirement. The uniaxial femur load cell, model number 2121, manufactured by Robert A. Denton, Inc. contains a similar note: ''Moment error 6% maximum with a 5,000 in-lb moment.''

NHTSA tested one ES–2re pubic load cell to determine its sensitivity to applied bending loads. However, since it was unknown whether the pubic load cell could survive a large bending moment, only loads of 3,000 in-lbs were applied. To achieve the 3,000 in-lbs moment, an axial load of 3,000 pounds was applied at a distance of one inch from the longitudinal centerline of the load cell. The bending moments were applied at 4 equally-spaced locations around the perimeter of the load cell to assess the load cell's sensitivity in multiple orientations. NHTSA's testing at 3,000 in-lbs of bending moment resulted in errors of 4.6, 6.2, 1.2, and 5.9% at the four locations. NHTSA notes that only one load cell was tested in this analysis, therefore any requirement should consider the greater possible variation that would be observed if additional load cells had been tested.

It should also be noted that NHTSA believes the correct bending loads should be applied about the x- and z-axes (M_x and M_z), not about the x- and y-axes as proposed by FTSS and DATD.

Additionally, upon review of the drawing, NHTSA observed one minor error. The capacity of the load cell is presently specified to be 2,000 N (450 lbf). The correct specification should be 20,000 N (4,500 lbf).

We have modified drawing SA572–S77 by adding the following note: ''Axial load error shall be less than 7% for a 3,000 pound axial load applied at any location along a one inch radius from the longitudinal centerline of the load cell.'' We have also modified the print to reflect the correct load cell capacity of 20,000 N (4,500 lbf).

List of Subjects in 49 CFR Part 572

Incorporation by reference, Motor vehicle safety.

■ In consideration of the foregoing, NHTSA amends 49 CFR Part 572 as follows:

Part 572—Anthropomorphic Test Dummies

■ 1. The authority citation for Part 572 continues to read as follows:

Authority: 49 U.S.C. 322, 30111, 30115, 30117 and 30166; delegation of authority at 49 CFR 1.50.

Subpart T—[Reserved]

■ 2. 49 CFR part 572 is amended by reserving subpart T.

■ 3. 49 CFR part 572 is amended by adding a new subpart U, consisting of §§ 572.180 through 572.189 to read as follows:

Subpart T—[Reserved]

Subpart U— ES–2re Side Impact Crash Test Dummy, 50th Percentile Adult Male

Sec.
572.180 Incorporated materials.
572.181 General description.
572.182 Head assembly.
572.183 Neck assembly.
572.184 Shoulder assembly.
572.185 Thorax (upper torso) assembly.
572.186 Abdomen assembly.
572.187 Lumbar spine.
572.188 Pelvis.
572.189 Instrumentation and test conditions.
Appendix A to Subpart U of Part 572—Figures

Subpart U, ES–2re Side Impact Crash Test Dummy, 50th Percentile Adult Male

§ 572.180 Incorporated materials.

(a) The following materials are hereby incorporated into this Subpart by reference:

(1) A parts/drawing list entitled, ''Parts/Drawings List, Part 572 Subpart U, Eurosid 2 with Rib Extensions (ES2re), Sept. 2006,''

(2) A drawings and inspection package entitled ''Parts List and Drawings, Part 572 Subpart U, Eurosid 2 with Rib Extensions (ES–2re, Alpha Version), September 2006,'' consisting of:

(i) Drawing No. 175–0000 ES–2re Dummy Assembly;

(ii) Drawing No. 175–1000 Head Assembly;

(iii) Drawing No. 175–2000, Neck Assembly Test/Cert;

(iv) Drawing No. 175–3000, Shoulder Assembly;

(v) Drawing No. 175–3500, Arm Assembly, Left;

(vi) Drawing No. 175–3800, Arm Assembly, Right;

(vii) Drawing No. 175–4000, Thorax Assembly with Rib Extensions;

(viii) Drawing No. 175–5000, Abdominal Assembly;

(ix) Drawing No. 175–5500 Lumbar Spine Assembly;

(x) Drawing No. 175–6000 Pelvis Assembly;

(xi) Drawing No. 175–7000–1, Leg Assembly—left;

(xii) Drawing No. 175–7000–2, Leg Assembly—right;

(xiii) Drawing No. 175–8000, Neoprene Body Suit; and,

(xiv) Drawing No. 175–9000, Headform Assembly;

(3) A procedures manual entitled ''Procedures for Assembly, Disassembly and Inspection (PADI) of the EuroSID–2re 50th Percentile Adult Male Side Impact Crash Test Dummy, September 2006,'' incorporated by reference in §§ 572.180(a)(2), and 572.181(a);

(4) Society of Automotive Engineers (SAE) Recommended Practice J211, Rev. Mar 95 ''Instrumentation for Impact Tests—Part 1—Electronic Instrumentation''; and,

(5) SAE J1733 of 1994–12 ''Sign Convention for Vehicle Crash Testing.''

(b) The Director of the Federal Register approved the materials incorporated by reference in accordance with 5 U.S.C. 552(a) and 1 CFR part 51. Copies of the materials may be inspected at the National Archives and Records Administration (NARA), and in electronic format through the DOT docket management system (DMS). For information on the availability and inspection of this material at NARA, call 202–741–6030, or go to: *http://www.archives.gov/federal_register/code_of_federal_regulations/ibr_locations.html.* For information on the availability and inspection of this material at the DOT DMS, call 1–800–647–5527, or go to: *http://dms.dot.gov.*

(c) The incorporated materials are available as follows:

(1) The Parts/Drawings List, Part 572 Subpart U, Eurosid 2 with Rib Extensions (ES2re), Sept. 2006, referred to in paragraph (a)(1) of this section, the Parts List and Drawings, Part 572 Subpart U, Eurosid 2 with Rib Extensions (ES–2re, Alpha Version), September 2006, referred to in paragraph (a)(2) of this section, and the PADI document referred to in paragraph (a)(3) of this section, are available in electronic format through the DOT docket management system and in paper format from Leet-Melbrook, Division of New RT, 18810 Woodfield Road, Gaithersburg, MD 20879, telephone (301) 670–0090.

(2) The SAE materials referred to in paragraphs (a)(4) and (a)(5) of this section are available from the Society of Automotive Engineers, Inc., 400 Commonwealth Drive, Warrendale, PA 15096, telephone 1–877–606–7323.

§ 572.181 General description.

(a) The ES–2re Side Impact Crash Test Dummy, 50th Percentile Adult Male, is defined by:

(1) The drawings and specifications contained in the ''Parts List and Drawings, Part 572 Subpart U, Eurosid 2 with Rib Extensions (ES–2re, Alpha Version), September 2006,'' which includes the technical drawings and specifications described in Drawing 175–0000, the titles of which are listed in Table A;

TABLE A

Component assembly	Drawing No.
Head Assembly	175–1000
Neck Assembly Test/Cert	175–2000
Neck Bracket Including Lifting Eyebolt	175–2500
Shoulder Assembly	175–3000
Arm Assembly-Left	175–3500
Arm Assembly-Right	175–3800
Thorax Assembly with Rib Extensions	175–4000
Abdominal Assembly	175–5000
Lumbar Spine Assembly	175–5500
Pelvis Assembly	175–6000
Leg Assembly, Left	175–7000–1

TABLE A—Continued

Component assembly	Drawing No.
Leg Assembly, Right	175–7000–2
Neoprene Body Suit	175–8000

(2) ''Parts/Drawings List, Part 572 Subpart U, Eurosid 2 with Rib Extensions (ES2re), Sept. 2006,'' containing 8 pages, incorporated by reference in § 572.180,

(3) A listing of available transducers-crash test sensors for the ES–2re Crash Test Dummy is shown in drawing 175–0000 sheet 4 of 6, dated September 2006, incorporated by reference in § 572.180,

(4) Procedures for Assembly, Disassembly and Inspection (PADI) of the ES–2re Side Impact Crash Test Dummy, September 2006, incorporated by reference in § 572.180,

(5) Sign convention for signal outputs reference document SAE 1733 Information Report, titled ''Sign Convention for Vehicle Crash Testing'' dated July 15, 1986.

(b) Exterior dimensions of ES–2re test dummy are shown in drawing 175–0000 sheet 3 of 6, dated September 2006.

(c) Weights of body segments (head, neck, upper and lower torso, arms and upper and lower segments) and the center of gravity location of the head are shown in drawing 175–0000 sheet 2 of 6, dated September 2006.

(d) Adjacent segments are joined in a manner such that, except for contacts existing under static conditions, there is no additional contact between metallic elements of adjacent body segments throughout the range of motion.

(e) The structural properties of the dummy are such that the dummy conforms to this Subpart in every respect before use in any test similar to those in Standard No. 214, Side Impact Protection and Standard No. 201, Occupant Protection in Interior Impact.

§ 572.182 Head assembly.

(a) The head assembly consists of the head (drawing 175–1000), including the neck upper transducer structural replacement, and a set of three (3) accelerometers in conformance with specifications in § 572.189(b) and mounted as shown in drawing (175–0000 sheet 1 of 6). When tested to the test procedure specified in paragraph (b) of this section, the head assembly shall meet performance requirements specified in paragraph (c) of this section.

(b) *Test procedure.* The head shall be tested per procedure specified in 49 CFR § 572.112(a).

(c) *Performance criteria.*

(1) When the head assembly is dropped in accordance with § 572.112 (a), the measured peak resultant acceleration shall be between 125 g's and 155 g's;

(2) The resultant acceleration-time curve shall be unimodal to the extent that oscillations occurring after the main acceleration pulse shall not exceed 15% (zero to peak) of the main pulse;

(3) The fore-and-aft component of the head acceleration shall not exceed 15 g's.

§ 572.183 Neck assembly.

(a) The neck assembly consists of parts shown in drawing 175–2000. For purposes of this test, the neck is mounted within the headform assembly 175–9000 as shown in Figure U1 in Appendix A to this subpart. When subjected to tests procedures specified in paragraph (b) of this section, the neck-headform assembly shall meet performance requirements specified in paragraph (c) of this section.

(b) *Test procedure.*

(1) Soak the neck-headform assembly in a test environment as specified in § 572.189(o);

(2) Attach the neck-headform assembly to the Part 572 subpart E pendulum test fixture as shown in Figure U2–A in Appendix A to this subpart, so that the midsagittal plane of the neck-headform assembly is vertical and perpendicular to the plane of motion of the pendulum longitudinal centerline shown in Figure U2–A. Torque the half-spherical screws (175–2004) located at either end of the neck assembly to 88 +/ − 5 in-lbs using the neck compression tool (175–9500) or equivalent;

(3) Release the pendulum from a height sufficient to allow it to fall freely to achieve an impact velocity of 3.4+/ − 0.1 m/s measured at the center of the pendulum accelerometer (Figure 22 as set forth in 49 CFR 572.33) at the time the pendulum makes contact with the decelerating mechanism. The velocity-time history of the pendulum falls inside the corridor determined by the upper and lower boundaries specified in Table 1 to paragraph (a) of this section.

(4) Allow the neck to flex without the neck-headform assembly making contact with any object;

(5) Time zero is defined in § 572.189(k).

TABLE TO 1 TO PARAGRAPH (A)—ES–2RE NECK CERTIFICATION PENDULUM VELOCITY CORRIDOR

Upper boundary		Lower boundary	
Time (ms)	Velocity (m/s)	Time (ms)	Velocity (m/s)
1.0	0.00	0.0	− 0.05
3.0	− 0.25	2.5	− 0.375
14.0	− 3.20	13.5	− 3.7
		17.0	− 3.7

(c) *Performance criteria.* (1) The pendulum deceleration pulse is to be characterized in terms of decrease in velocity as determined by integrating the filtered pendulum acceleration response from time-zero. The pendulum shall be vertical within +/ − 1° when its speed is reduced to 0 m/s.

(2) The maximum rotation in the lateral direction of the reference plane of the headform (175–9000) as shown in Figure U2–B in Appendix A to this subpart, shall be 49 to 59 degrees with respect to the longitudinal axis of the pendulum occurring between 54 and 66 ms from time zero. Rotation of the headform-neck assembly and the neck angle with respect to the pendulum shall be measured with potentiometers specified in § 572.189(c), installed as shown in drawing 175–9000, and calculated per procedure specified in Figure U2–B in Appendix A to this subpart;

(3) The decaying headform rotation vs. time curve shall cross the zero angle with respect to its initial position at time of impact relative to the pendulum centerline between 53 ms to 88 ms after the time the peak translation-rotation value is reached.

§ 572.184 Shoulder assembly.

(a) The shoulder (175–3000) is part of the body assembly shown in drawing 175–0000. When subjected to impact tests specified in paragraph (b) of this section, the shoulder assembly shall meet performance requirements of paragraph (c) of this section.

(b) *Test procedure.*

(1) Soak the dummy assembly, without suit and shoulder foam pad (175–3010), in a test environment as specified in § 572.189(n);

(2) The dummy is seated, as shown in Figure U3 in Appendix A to this subpart, on a flat, horizontal, rigid surface covered by two overlaid 2 mm thick Teflon sheets and with no back support of the dummy's torso. The dummy's torso spine backplate is vertical within ±2 degrees and the midsagittal plane of the thorax is positioned perpendicular to the direction of the plane of motion of the impactor at contact with the shoulder. The arms are oriented forward at 50±2 degrees from the horizontal, pointing downward. The dummy's legs are horizontal and symmetrical about the midsaggital plane with the distance between the innermost point on the opposite ankle at 100 ±5 mm. The length of the elastic shoulder cord (175–3015) shall be adjusted so that a force between and including 27.5 and 32.5 N applied in a forward direction at 4 ±1 mm from the outer edge of the clavicle in the same plane as the clavicle movement, is required to initiate a forward motion of 1 to 5 mm;

(3) The impactor is the same as defined in § 572.189(a);

(4) The impactor is guided, if needed, so that at contact with the shoulder, its longitudinal axis is within ±0.5 degrees of a horizontal plane and perpendicular (±0.5 degrees) to the midsagittal plane of the dummy and the centerpoint on the impactor's face is within 5 mm of the center of the upper arm pivot bolt (5000040) at contact with the test dummy, as shown in Figure U3 in Appendix A to this subpart;

(5) The impactor impacts the dummy's shoulder at 4.3±0.1 m/s.

(c) *Performance criteria.* The peak acceleration of the impactor is between 7.5 g's and 10.5 g's during the pendulum's contact with the dummy.

§ 572.185 Thorax (upper torso) assembly.

(a) The thorax assembly of the dummy must meet the requirements of both (b) and (c) of this section. Section 572.185(b) specifies requirements for an individual rib drop test, and § 572.185(c) specifies requirements for a full-body thorax impact test.

(b) *Individual rib drop test.* For purposes of this test, the rib modules (175–4002), which are part of the thorax assembly (175–4000), are tested as individual units. When subjected to test procedures specified in paragraph (b)(1) of this section, the rib modules shall meet performance requirements specified in paragraph (b)(2) of this section. Each rib is tested at both the 459 mm and 815 mm drop height tests described in paragraphs (b)(1)(v)(A) and (B) of this section.

(1) *Test procedure.*

(i) Soak the rib modules (175–4002) in a test environment as specified in § 572.189(o);

(ii) Mount the rib module rigidly in a drop test fixture as shown in Figure U7 in Appendix A to this subpart with the impacted side of the rib facing up;

(iii) The drop test fixture contains a free fall guided mass of 7.78±0.01 kg that is of rigid construction and with a flat impact face 150±1.0 mm in diameter and an edge radius of ±0.25 mm;

(iv) Align the vertical longitudinal centerline of the drop mass so that the centerpoint of the downward-facing flat surface is aligned to impact the centerline of the rib rail guide system within ± 2.5 mm.

(v) The impacting mass is dropped from the following heights:

(A) 459 ±5 mm

(B) 815 ±8 mm

(vi) A test cycle consists of one drop from each drop height specified in paragraph (b)(1)(v) of this section. Allow a period of not less than five (5) minutes between impacts in a single test cycle. Allow a period of not less than thirty (30) minutes between two separate cycles of the same rib module.

(2) *Performance criteria.*

(i) Each of the rib modules shall deflect as specified in paragraphs (b)(2)(i)(A) and (B) of this section, with the deflection measurements made with the internal rib module position transducer specified in § 572.189(d):

(A) Not less than 36 mm and not more than 40 mm when impacted by the mass dropped from 459 mm; and,

(B) Not less than 46 mm and not more than 51mm when impacted by the mass dropped from 815 mm.

(c) *Full-body thorax impact test.* The thorax is part of the upper torso assembly shown in drawing 175–4000. For this full-body thorax impact test, the dummy is tested as a complete assembly (drawing 175–0000) with the struck-side arm (175–3500, left arm; 175–3800, right arm) removed. The dummy's thorax is equipped with deflection potentiometers as specified in drawing SA572–S69. When subjected to the test procedures specified in paragraph (c)(1) of this section, the thorax shall meet the performance requirements set forth in paragraph (c)(2).

(1) *Test Procedure.*

(i) Soak the dummy assembly (175–0000), with struck-side arm (175–3500, left arm; 175–3800, right arm), shoulder foam pad (175–3010), and neoprene body suit (175–8000) removed, in a test environment as specified in § 572.189(n);

(ii) The dummy is seated, as shown in Figure U4 in Appendix A to this subpart, on a flat, horizontal, rigid surface covered by two overlaid 2 mm thick Teflon sheets and with no back support of the dummy's torso. The dummy's torso spine backplate is vertical within ±2 degrees and the midsagittal plane of thorax is positioned perpendicular to the direction of the plane of motion of the impactor at contact with the thorax. The non-struck side arm is oriented vertically, pointing downward. The dummy's legs are horizontal and symmetrical about the midsagittal plane with the distance between the innermost point on the opposite ankle at 100 ±5 mm;

(iii) The impactor is the same as defined in § 572.189(a);

(iv) The impactor is guided, if needed, so that at contact with the thorax its longitudinal axis is within ±0.5 degrees of horizontal and perpendicular ±0.5 degrees to the midsagittal plane of the dummy and the centerpoint of the impactor's face is within 5 mm of the impact point on the dummy's middle rib shown in Figure U4 in Appendix A to this subpart;

(v) The impactor impacts the dummy's thorax at 5.5 m/s ±0.1 m/s.

(vi) Time zero is defined in § 572.189(k).

(2) *Performance Criteria.*

(i) The individual rib modules shall conform to the following range of deflections:

(A) Upper rib not less than 33.2 mm and not greater than 41.3 mm;

(B) Middle rib not less than 37.1 mm and not greater than 45.4 mm;

(C) Lower rib not less than 35.6 mm and not greater than 43.0 mm.

(ii) The impactor force shall be computed as the product of the impact probe acceleration and its mass. The peak impactor force at any time after 6 ms from time zero shall be not less than 5,173 N and not greater than 6,118 N.

§ 572.186 Abdomen assembly.

(a) The abdomen assembly (175–5000) is part of the dummy assembly shown in drawing 175–0000 including load sensors specified in § 572.189(e). When subjected to tests procedures specified in paragraph (b) of this section, the abdomen assembly shall meet performance requirements specified in paragraph (c) of this section.

(b) *Test procedure.*

(1) Soak the dummy assembly (175–0000), without suit (175–8000) and shoulder foam pad (175–3010), as specified in § 572.189(n);

(2) The dummy is seated as shown in Figure U5 in Appendix A to this subpart;

(3) The abdomen impactor is the same as specified in § 572.189(a) except that on its rectangular impact surface is

affixed a special purpose block whose weight is 1.0 ± 0.01 kg. The block is 70 mm high, 150 mm wide and 60 to 80 mm deep. The impact surface is flat, has a minimum Rockwell hardness of M85, and an edge radius of 4 to 5 mm. The block's wide surface is horizontally oriented and centered on the longitudinal axis of the probe's impact face as shown in Figure U5–A in Appendix A to this subpart;

(4) The impactor is guided, if needed, so that at contact with the abdomen its longitudinal axis is within ± 0.5 degrees of a horizontal plane and perpendicular ± 0.5 degrees to the midsagittal plane of the dummy and the centerpoint on the impactor's face is aligned within 5 mm of the center point of the middle load measuring sensor in the abdomen as shown in Figure U5;

(5) The impactor impacts the dummy's abdomen at 4.0 m/s ± 0.1 m/s;

(6) Time zero is defined in § 572.189(k).

(c) Performance criteria.

(1) The maximum sum of the forces of the three abdominal load sensors, specified in 572.189(e), shall be not less than 2200 N and not more than 2700 N and shall occur between 10 ms and 12.3 ms from time zero. The calculated sum of the three load cell forces must be concurrent in time.

(2) Maximum impactor force (impact probe acceleration multiplied by its mass) is not less than 4000 N and not more than 4800 N occurring between 10.6 ms and 13.0 ms from time zero.

§ 572.187 Lumbar spine.

(a) The lumbar spine assembly consists of parts shown in drawing 175–5500. For purposes of this test, the lumbar spine is mounted within the headform assembly 175–9000 as shown in Figure U1 in Appendix A to this subpart. When subjected to tests procedures specified in paragraph (b) of this section, the lumbar spine-headform assembly shall meet performance requirements specified in paragraph (c) of this section.

(b) *Test procedure.*

(1) Soak the lumbar spine-headform assembly in a test environment as specified in § 572.189(o);

(2) Attach the lumbar spine-headform assembly to the Part 572 pendulum test fixture per procedure in § 572.183(b)(2) and as shown in Figure U2–A in Appendix A to this subpart. Torque the lumbar hex nut (p/n 9000057) on to the lumbar cable assembly (175–5506) to 50 ± 5 in-lb;

(3) Release the pendulum from a height sufficient to allow it to fall freely to achieve an impact velocity of 6.05 ±0.1 m/s measured at the center of the pendulum accelerometer (Figure 22) at the time the pendulum makes contact with its decelerating mechanism. The velocity-time history of the pendulum falls inside the corridor determined by the upper and lower boundaries specified in Table 1 to paragraph (b) of this section;

(4) Allow the lumbar spine to flex without the lumbar spine or the headform making contact with any object;

(5) Time zero is defined in § 572.189(k).

TABLE 1 TO PARAGRAPH (b).—ES–2RE LUMBAR SPINE CERTIFICATION PENDULUM VELOCITY CORRIDOR

Upper boundary		Lower boundary	
Time (ms)	Velocity (m/s)	Time (ms)	Velocity (m/s)
1.0	0.00	0.0	−0.05
3.7	−0.24	2.7	−0.425
27.0	−5.80	24.5	−6.50
		30.0	−6.50

(c) *Performance criteria.* (1) The pendulum deceleration pulse is to be characterized in terms of decrease in velocity as determined by integrating the filtered pendulum acceleration response from time-zero.

(2) The maximum rotation in the lateral direction of the reference plane of the headform (175–9000) as shown in Figure U2–B in Appendix A to this subpart, shall be 45 to 55 degrees with respect to the longitudinal axis of the pendulum occurring between 39 and 53 ms from time zero. Rotation of the headform-neck assembly shall be measured with potentiometers specified in § 572.189(c), installed as shown in drawing 175–9000, and calculated per procedure specified in Figure U2–B in Appendix A to this subpart.

(3) The decaying headform rotation vs. time curve shall cross the zero angle with respect to its initial position at impact relative to the pendulum centerline between 37 ms to 57 ms after the time the peak translation-rotation value is reached.

§ 572.188 Pelvis.

(a) The pelvis (175–6000) is part of the torso assembly shown in drawing 175–0000. The pelvis is equipped with a pubic symphysis load sensor in conformance with § 572.189(f) and mounted as shown in drawing (175–0000 sheet 4). When subjected to tests procedures specified in paragraph (b) of this section, the pelvis assembly shall meet performance requirements specified in paragraph (c) of this section.

(b) *Test procedure.*

(1) Soak the dummy assembly (175–0000) without suit (175–8000) and shoulder foam pad (175–3010) as specified in § 572.189(n);

(2) The dummy is seated as specified in Figure U6 in Appendix A to this subpart;

(3) The pelvis impactor is the same as specified in § 572.189(a);

(4) The impactor is guided, if needed, so that at contact with the pelvis its longitudinal axis is within ± 0.5 degrees of a horizontal plane and perpendicular to the midsagittal plane of the dummy and the centerpoint on the impactor's face is within 5 mm of the center of the H-point in the pelvis, as shown in Figure U5 in Appendix A to this subpart;

(5) The impactor impacts the dummy's pelvis at 4.3 +/− 0.1 m/s.

(c) *Performance criteria.*

(1) The impactor force (probe acceleration multiplied by its mass) shall be not less than 4,700 N, and not more than 5,400 N, occurring between 11.8 ms and 16.1 ms from time zero as defined in § 572.189(k);

(2) The pubic symphysis load, measured with load cell specified in § 572.189(f) shall be not less than 1,230 N and not more than 1,590 N occurring between 12.2 ms and 17.0 ms from time zero as defined in § 572.189(k).

§ 572.189 Instrumentation and test conditions.

(a) The test probe for lateral shoulder, thorax without arm, abdomen, and pelvis impact tests is the same as that

specified in § 572.36(a) and the impact probe has a minimum mass moment of inertia in yaw of 9,000 kg-cm^2, a free air resonant frequency not less than 1,000 Hz and the probe's end opposite to the impact face has provisions to mount an accelerometer with its sensitive axis collinear with the longitudinal axis of the probe. All hardware attached directly to the impactor and one-third (⅓) of the mass of the suspension cables must be included in the calculations of the total impactor mass. The sum mass of the attachments and ⅓ cable mass must not exceed 5 percent of the total pendulum mass. No suspension hardware, suspension cables, or any other attachments to the test probe, including velocity vane, shall make contact with the dummy during the test.

(b) Accelerometers for the head, the thoracic spine, and the pelvis conform to specifications of SA572–S4.

(c) Rotary potentiometer for the neck and lumbar spine certification tests conforms to SA572–53.

(d) Linear position transducer for the thoracic rib conforms to SA572–S69.

(e) Load sensors for the abdomen conform to specifications of SA572–S75.

(f) Load sensor for the pubic symphysis conforms to specifications of SA572–77.

(g) Load sensor for the lumbar spine conforms to specifications of SA572–76.

(h) Instrumentation and sensors conform to the Recommended Practice SAE J–211 (Mar. 1995)—Instrumentation for Impact Test unless noted otherwise.

(i) All instrumented response signal measurements shall be treated to the following specifications:

(1) Head acceleration—Digitally filtered CFC 1000;

(2) Neck and lumbar spine rotations—Digitally filtered CFC 180;

(3)Neck and lumbar spine pendulum accelerations—Digitally filtered CFC 60;

(4) Pelvis, shoulder, thorax without arm, and abdomen impactor accelerations—Digitally filtered CFC 180;

(5) Abdominal and pubic symphysis force—Digitally filtered at CFC 600;

(6) Thorax deflection—Digitally filtered CFC 180.

(j)(1) Filter the pendulum acceleration data using a SAE J211 CFC 60 filter.

(2) Determine the time when the filtered pendulum accelerometer data first crosses the -10 g level (T_{10}).

(3) Calculate time-zero: $T0 = T_{10} - T_m$.,

Where:

T_m = 1.417 ms for the Neck Test
= 1.588 ms for the Lumbar Spine Test

(4) Set the data time-zero to the sample number nearest to the calculated T0.

(k)(1) Filter the pendulum acceleration data using a SAE J211 CFC 180 filter.

(2) Determine the time when the filtered pendulum accelerometer data first crosses the -1.0 m/s^2 ($-.102$ g) acceleration level (T0).

(3) Set the data time-zero to the sample number of the new T0.

(l) Mountings for the head, spine and pelvis accelerometers shall have no resonance frequency within a range of 3 times the frequency range of the applicable channel class.

(m) Limb joints of the test dummy are set at the force between 1 to 2 G's, which just supports the limb's weight when the limbs are extended horizontally forward. The force required to move a limb segment does not exceed 2 G's throughout the range of the limb motion.

(n) Performance tests are conducted, unless specified otherwise, at any temperature from 20.6 to 22.2 degrees C. (69 to 72 degrees F.) and at any relative humidity from 10 percent to 70 percent after exposure of the dummy to those conditions for a period of not less than 4 hours.

(o) Certification tests of the same component, segment, assembly, or fully stassembled dummy shall be separated in time by a period of not less than thirty (30) minutes unless otherwise specified.

Appendix A to Subpart U of Part 572—Figures

BILLING CODE 4910–59–P

Figure U1

NECK/LUMBAR SPINE ATTACHED TO HEADFORM

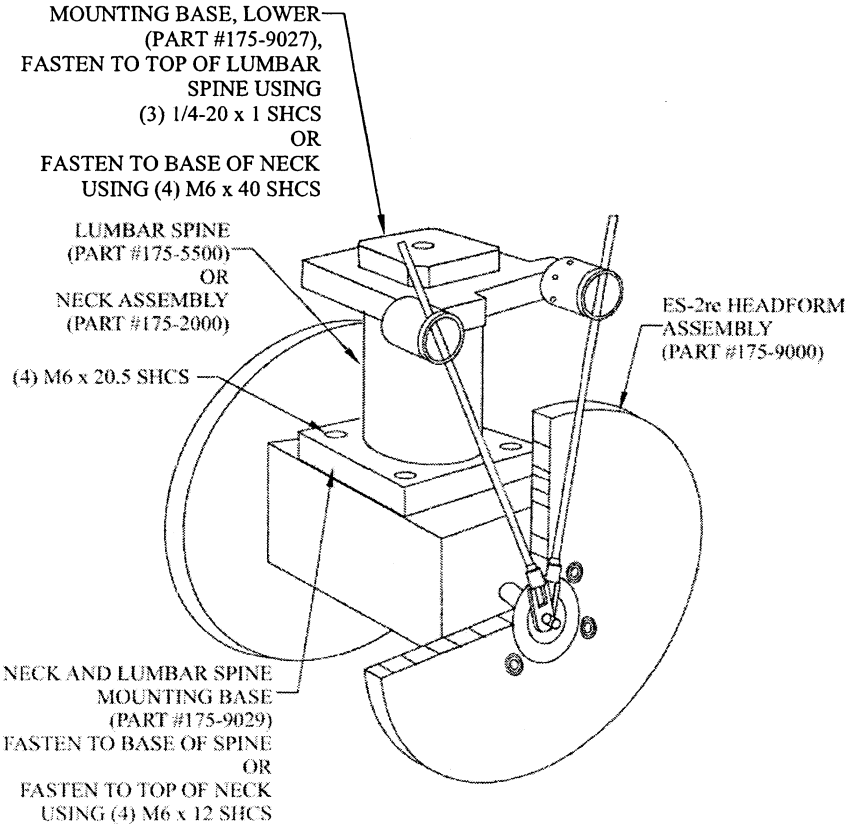

Figure U2-A

NECK/LUMBAR SPINE/HEADFORM ATTACHED TO PENDULUM

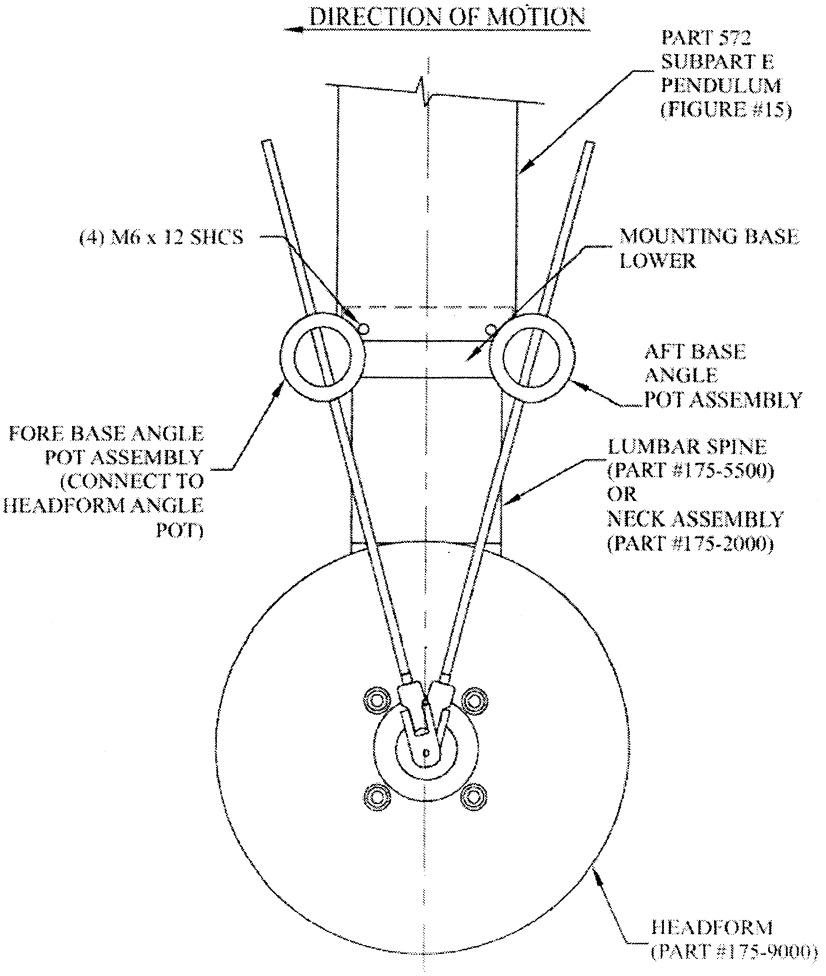

Figure U2-B

ANGLE MEASUREMENTS WITH HEADFORM SET-UP

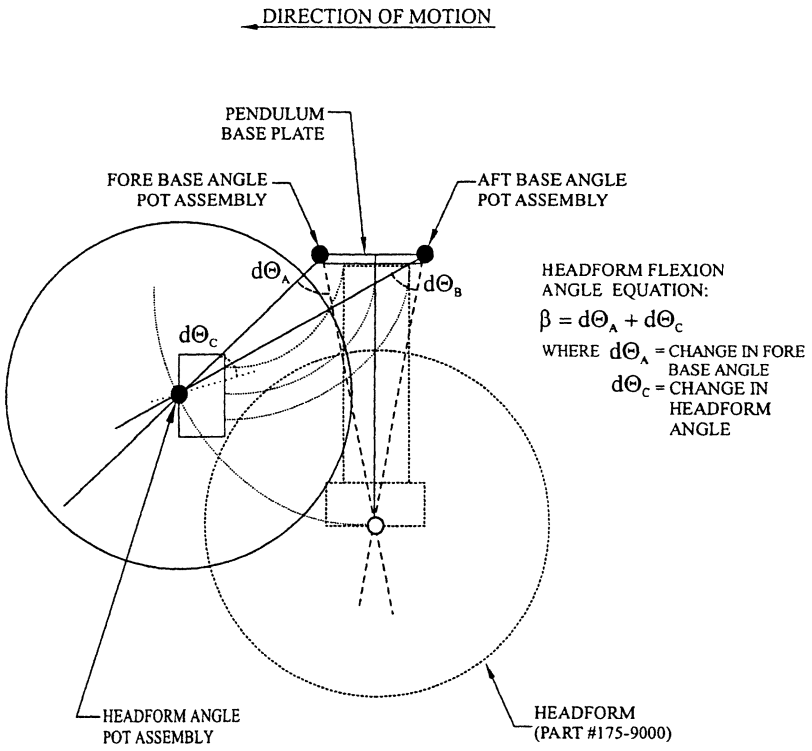

Figure U3

SHOULDER IMPACT

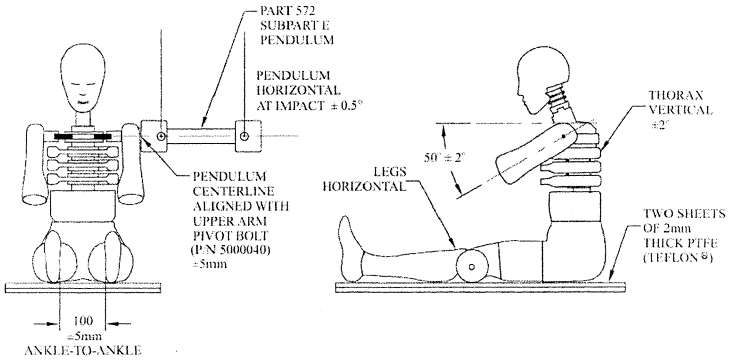

Figure U4
THORAX IMPACT

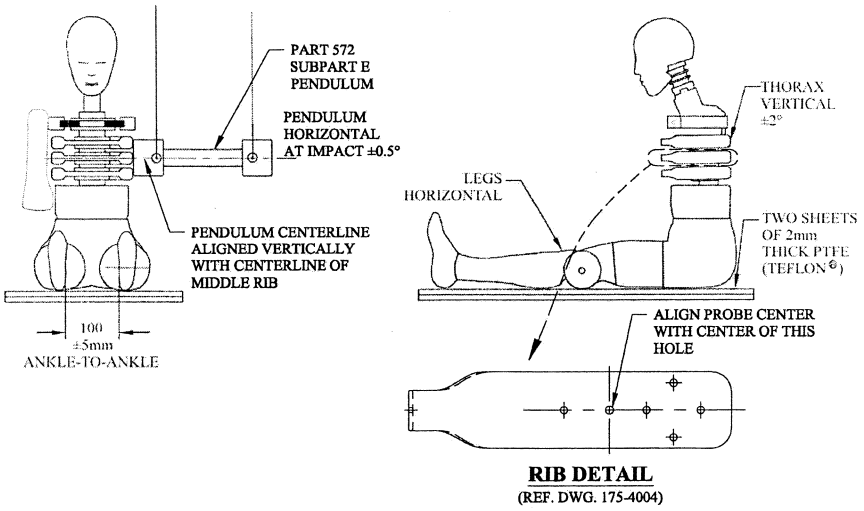

Figure U5
ABDOMEN IMPACT

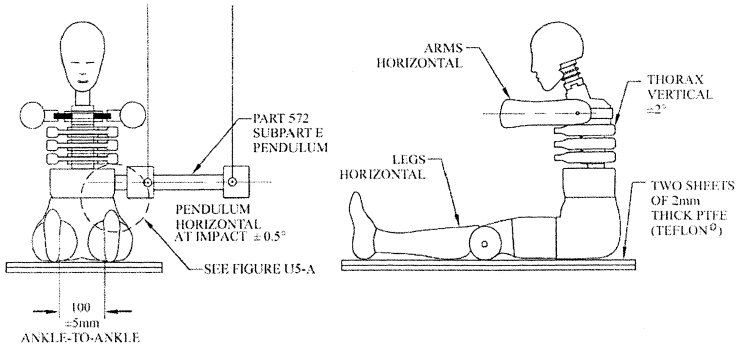

Figure U5-A

ABDOMEN IMPACT - VIEW A

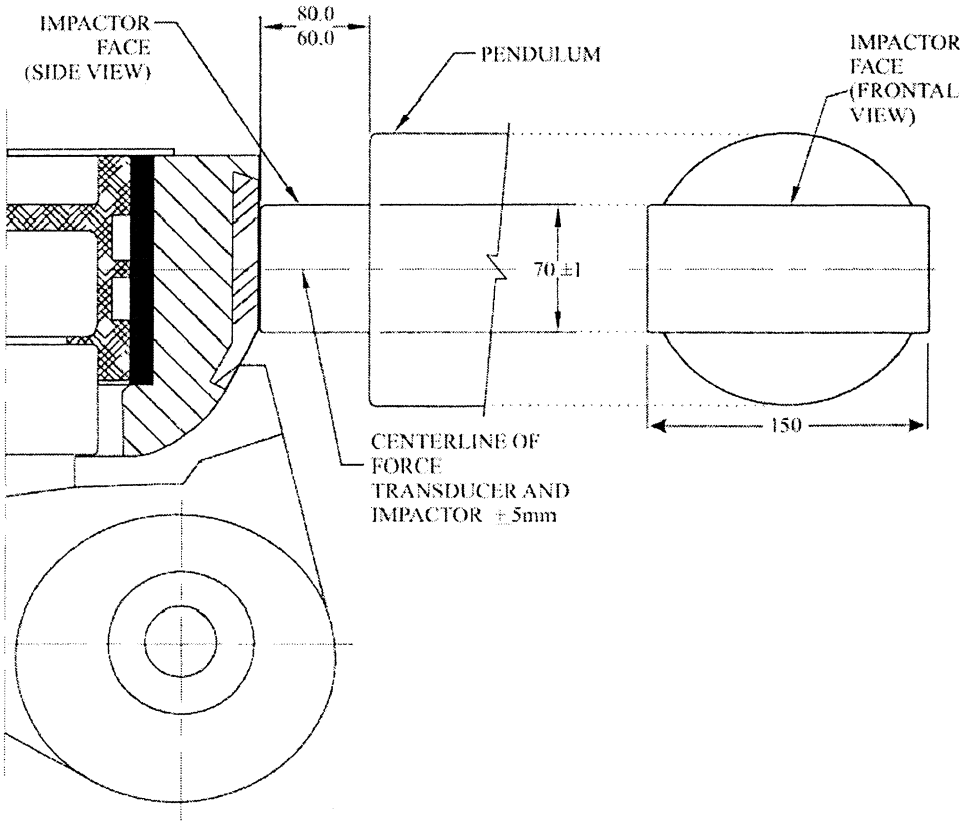

ABDOMEN TEST SET-UP

Figure U6

PELVIS IMPACT

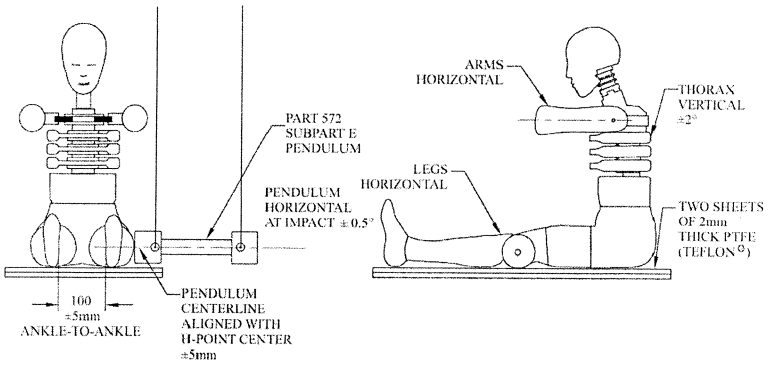

Figure U7
RIB DROP TEST

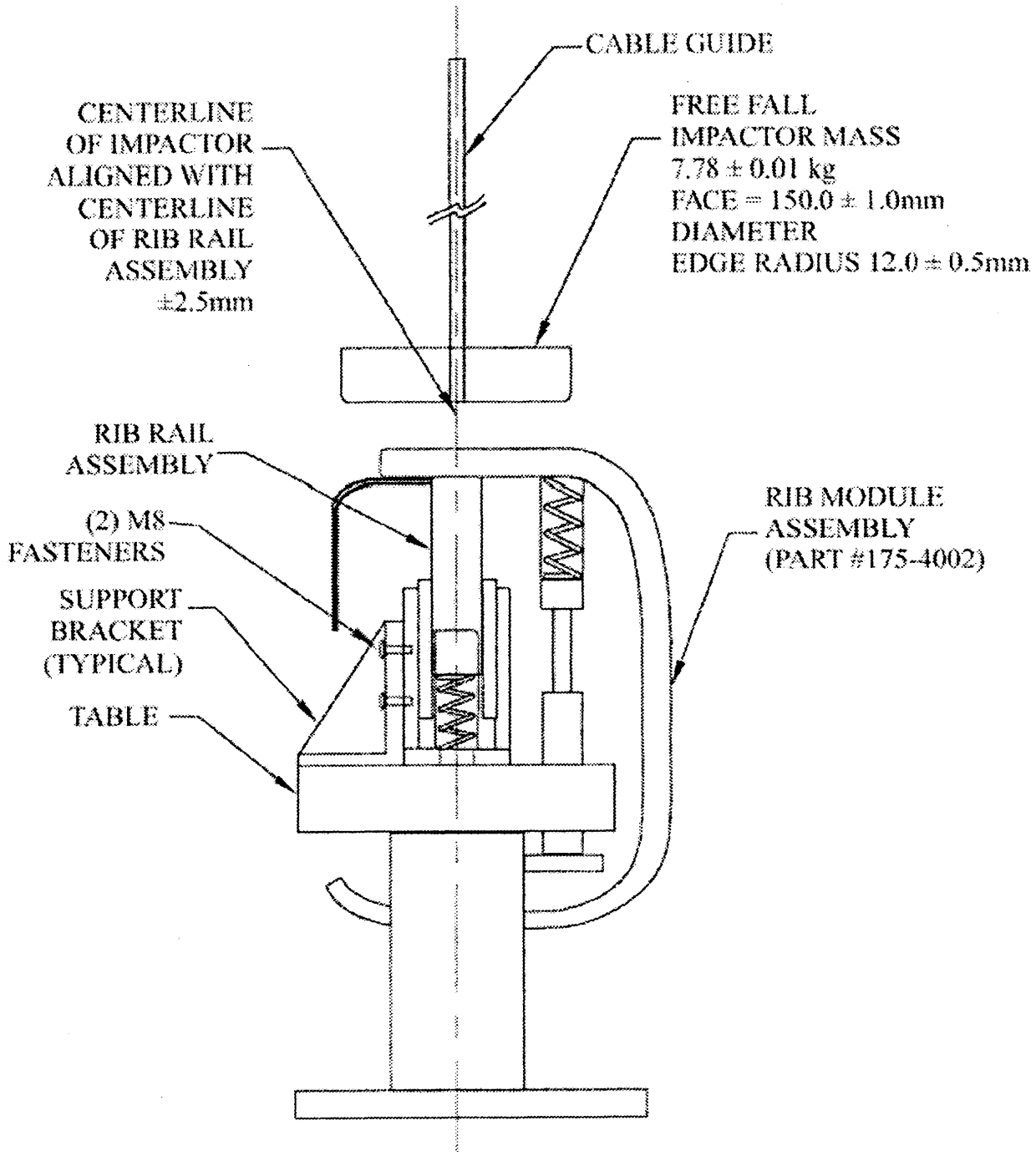

Issued: November 24, 2006.

Nicole R. Nason,

Administrator.

[FR Doc. 06–9554 Filed 12–13–06; 8:45 am]

BILLING CODE 4910–59–C

DEPARTMENT OF TRANSPORTATION

National Highway Traffic Safety Administration

49 CFR Part 572

Docket No. NHTSA 25442

RIN 2127–AJ16

Anthropomorphic Test Devices; SID–IIs Side Impact Crash Test Dummy 5th Percentile Adult Female

AGENCY: National Highway Traffic Safety Administration (NHTSA), Department of Transportation (DOT).

ACTION: Final rule.

SUMMARY: This final rule amends the agency's regulation on anthropomorphic test devices to add specifications and qualification requirements for the 5th percentile adult female crash test dummy, called the SID–IIs Build Level D (''SID–IIs'') test dummy. The SID–IIs dummy is instrumented in the head, thorax, abdomen and pelvis, which enables it to assess in a comprehensive manner the performance of vehicles in protecting small-stature occupants in side impacts. NHTSA plans to use the SID–IIs dummy in an upgraded Federal motor vehicle safety standard on side impact protection.

DATES: This final rule is effective June 12, 2007. The incorporation by reference of certain publications listed in the regulations is approved by the Director of the Federal Register as of June 12, 2007. If you wish to petition for reconsideration of this rule, your petition must be received by January 29 2007.

ADDRESSES: If you wish to petition for reconsideration of this rule, you should refer in your petition to the docket number of this document and submit your petition to: Administrator, Room 5220, National Highway Traffic Safety Administration, 400 Seventh Street SW., Washington, DC 20590.

The petition will be placed in the docket. Anyone is able to search the electronic form of all documents received into any of our dockets by the name of the individual submitting the comment (or signing the comment, if submitted on behalf of an association, business, labor union, etc.). You may review DOT's complete Privacy Act Statement in the **Federal Register** published on April 11, 2000 (Volume 65, Number 70; Pages 19477–78) or you may visit *http://dms.dot.gov.*

FOR FURTHER INFORMATION CONTACT: For non-legal issues, you may call Stanley Backaitis, NHTSA Office of Crashworthiness Standards (telephone 202–366–4912). For legal issues, you may call Deirdre Fujita, NHTSA Office of Chief Counsel (telephone 202–366–2992) (fax 202–366–3820). You may send mail to these officials at the National Highway Traffic Safety Administration, 400 Seventh St., SW., Washington, DC 20590.

SUPPLEMENTARY INFORMATION:

Table of Contents

I. Background
a. Need for the Dummy
b. Development of the SID–IIs
c. Development of the FRG and Build Level D Dummies
II. Response to the Comments on the FRG
III. Other Issues
a. Overview
b. How this Final Rule Differs from the NPRM
c. Description and Reference Materials
d. Biofidelity
e. Repeatability and Reproducibility (R&R)
1. Component and Sled Tests Generally
2. Repeatability and Reproducibility Assessments
3. NPRM
4. Comments on the NPRM
5. Agency Response
i. Component Qualification Tests
A. Repeatability in Component Tests
B. Reproducibility in Component Tests
ii. Sled Tests
A. Flat Wall Sled Tests at 6.0 m/s
1. Repeatability in Flat Wall Sled Tests at 6.0 m/s
2. Reproducibility in Flat Wall Sled Tests at 6.0 m/s
B. Abdominal Offset Sled Tests at MCW
C. Abdominal Offset Sled Tests at TRC
1. Repeatability in Abdominal Offset Sled Tests at TRC
2. Reproducibility in Abdominal Offset Sled Tests at TRC
iii. Conclusion
f. Pelvis of the Dummy
1. Pelvis Plug
2. Iliac Load Cell
3. Iliac Wing
g. The Shoulder with Arm Test
h. Other
1. Directional Impact Sensitivity
2. Toyota Suggests an Improved Upper Arm
3. Injury Assessment Reference Values
4. Reversibility
i. Test Dummy Drawing Package
1. Three-Dimensional (3-D) Shape Definitions
2. Material Specifications
3. Dummy Drawing Changes
IV. Qualification Procedures and Response Corridors
a. Qualification Procedures
b. Response Corridors
V. Dummy Performance in Full-Scale Vehicle Crash Tests
a. Oblique Vehicle-to-Pole Crash Tests
b. MDB Tests
c. Summary
VI. Conclusions
Rulemaking Analyses and Notices
Appendix A: Durability and Overload Analysis of the SID–IIsD Test Dummy

NHTSA published a notice of proposed rulemaking (NPRM) that proposed to upgrade Federal Motor Vehicle Safety Standard (FMVSS) No. 214, ''Side Impact Protection'' (49 CFR 571.214) by, among other things, adopting a dynamic pole test into the standard (May 17, 2004; 69 FR 27990; Docket 17694; reopening of comment period, January 12, 2005, 70 FR 2105). The proposed pole test is similar to, but more demanding than, that currently used optionally in FMVSS No. 201. In the proposed pole test, a vehicle is propelled sideways into a rigid pole at an angle of 75 degrees, at any speed up to 32 km/h (20 mph). The NPRM proposed that compliance with the pole test would be determined in two test configurations, one using a ''SID–IIs'' test dummy representing 5th percentile adult females and the other using an ''ES–2re'' test dummy representing mid-size adult males. Vehicles tested with the SID–IIs would have to comply with a head injury criterion and with thoracic and pelvic injury criteria developed for the new dummy. The agency also proposed using the dummies in FMVSS No. 214's existing moving deformable barrier (MDB) test, which simulates a vehicle-to-vehicle ''T-bone'' type intersection crash.[1]

This document establishes the specifications and qualification requirements for the SID–IIs 5th percentile adult female crash test dummy which would be used in the upgraded FMVSS No. 214. The NPRM preceding this Part 572 final rule was published on December 8, 2004 (69 FR 70947; Docket 18865; extension of comment period, March 8, 2005; 70 FR

[1] On August 10, 2005, President Bush signed the ''Safe, Accountable, Flexible, Efficient Transportation Equity Act: A Legacy for Users,'' (SAFETEA–LU), P.L. 109–59 (Aug. 10, 2005; 119 Stat. 1144), to authorize funds for Federal-aid highways, highway safety programs, and transit programs, and for other purposes. Section 10302(a) of SAFETEA–LU provides:

Sec. 10302. Side-Impact Crash Protection Rulemaking.

(a) Rulemaking.—The Secretary shall complete a rulemaking proceeding under chapter 301 of title 49, United States Code, to establish a standard designed to enhance passenger motor vehicle occupant protection, in all seating positions, in side impact crashes. The Secretary shall issue a final rule by July 1, 2008.

At the time of the enactment of § 10302(a), the agency's notice of proposed rulemaking to upgrade FMVSS No. 214 was already pending. The final rule completing the rulemaking proceeding will be issued at a future date.

11189). NHTSA published an NPRM proposing to amend 49 CFR Part 572 to add the specifications for the 50th percentile adult male ES–2re test dummy on September 15, 2004 (69 FR 55550; Docket 18864; reopening of comment period, January 12, 2005, 70 FR 2105). The SID–IIs Build Level D dummy has most of the features of the SID–II dummy proposed in the NPRM preceding this final rule, except for the floating rib guide design in the dummy's thorax. Commenters on the NPRM maintained that the floating rib guide design in the dummy's thorax was unnecessary and needlessly reduced the biofidelity and functionality of the dummy. Some commenters suggested alternative means of improving the durability of the dummy. After reviewing the comments to the NPRM and available test data, we have decided to adopt many of the proposed design features of the dummy, but not the design features that restricted vertical movement of the dummy's ribs. The resulting dummy adopted today into Part 572 is called the ''SID–IIsD'' dummy, for the SID–IIs Build Level D test dummy.

Technical reports and other materials relating to the December 8, 2004 SID–IIs NPRM have been placed in the docket for that NPRM (Docket 18865) and in the docket for the May 17, 2004 NPRM proposing the pole test upgrade to FMVSS No. 214 (Docket 17694). While technical materials discussed in today's final rule generally have been placed in the docket for today's rule (Docket 25442), occasionally an item might be found in another docket. When we refer in this preamble to technical materials, we will identify the docket where the item is filed.

In the May 17, 2004 FMVSS No. 214 NPRM, NHTSA proposed injury criteria for the SID–IIs injury measuring instrumentation of the dummy's head, thorax, and pelvis. HIC would be limited to 1000 measured in a 36 millisecond time interval (HIC_{36}). Lower spine acceleration would be limited to 82 g. For pelvic injury, the maximum of the sum of the measured acetabular and iliac force would be limited to 5,100 N. The agency did not propose in the May 17, 2004 NPRM to limit chest deflection because the agency wanted to obtain more data on the rib deflection measurement capabilities of the proposed dummy. (A technical report titled, ''Injury Criteria for Side Impact Dummies,'' discusses these proposed injury criteria. Docket 17694.)

I. Background

a. Need for the Dummy

Data from the 1990–2001 National Automotive Sampling System (NASS) and Crashworthiness Data System (CDC) show a need for a dummy that has the capability of predicting the risk of injury to a segment of small-statured vehicle occupants in side crashes. Table 1 shows the injury distribution of the estimated target population less than 65 inches (in) in stature in all types of side impact crashes between 12 and 25 mph delta V.

TABLE 1.—U.S. MOTOR VEHICLE SMALL STATURE ADULT OCCUPANT POPULATION INJURY SEVERITY DISTRIBUTION IN SIDE CRASHES

[For delta-V of 12–25 mph]

Body region	MAIS 1	MAIS 2	MAIS 3	MAIS 4	MAIS 5	Fatality	Total
Head and face	6706	1864	99	142	163	527	9049
Thorax	4377	295	1213	671	11	446	7094
Abdomen	264	86	20	112	27	96	670
Pelvis	0	0	123	0	0	6	136

The 1990–2001 NASS/CDS data also indicate that there are differences in the body region distribution of serious injuries between small and medium stature occupants in these side collisions. The data suggests that small stature occupants have a higher proportion of head, abdominal and pelvic injuries than medium stature occupants, and a lower proportion of chest injuries (Samaha et al, ''NHTSA Side Impact Research: Motivation for Upgraded Test Procedures,'' 18th ESV Conference Proceedings). Use of a small-statured dummy in side impact testing, in addition to a mid-size adult male dummy, would better represent the population at-risk in side impacts and substantially enhance protection for small adult occupants.

b. Development of the SID–IIs

The development of a small, second-generation side impact dummy was undertaken by the Occupant Safety Research Partnership (OSRP), a consortium of the U.S. Council for Automotive Research (USCAR), and dummy manufacturer First Technology Safety Systems (FTSS). (USCAR was formed in 1992 by DaimlerChrysler, Ford and General Motors as a research and development organization.) The OSRP determined that there was a need for a test dummy that would be better suited to help evaluate the performance of advanced side impact countermeasures, notably air bags, for occupants that are smaller than the 50th percentile size male. The new dummy was named the SID–IIs: ''SID'' for ''side impact dummy,'' ''II'' for second generation, and ''s'' for small.

The SID–IIs dummy was extensively tested in the late 1990s and early 2000 in vehicle crashes by Transport Canada, and to a limited extent by U.S. automobile manufacturers and suppliers, and the Insurance Institute for Highway Safety (IIHS). Continuous use of the SID–IIs dummy by various users uncovered some limitations and potential structural problems of the dummy that led to modifications of and upgrades to the dummy, resulting in OSRP's developing Build Levels A, B and C versions of the dummy. NHTSA modified the Build Level C dummy to develop a floating rib guide (''FRG'') design to address what were then NHTSA concerns about the durability of the dummy, and proposed in the December 8, 2004 NPRM to incorporate the SID–IIs with the floating rib guide design (''SID–IIsFRG'') into 49 CFR Part 572.

c. Development of the FRG and Build Level D Dummies

In response to the comments on the NPRM, this final rule adopts a version of the SID–IIs that has many of the design features of the proposed FRG dummy, but not the particular floating rib guide design that constrained the vertical motion of the dummy's ribs. This dummy is referred to as the SID–IIs Build Level D dummy.

The Build Level D dummy is an outgrowth of the SID–IIsFRG, which had originated from the Build Level C dummy. NHTSA's laboratory evaluation of the biofidelity of the SID–IIs Build Level C dummy found mechanical failures in chest displacement transducers and some ribcage and shoulder structural problems. The

agency believed that much of the problem was caused by the ribs of the Build C dummy not remaining constrained by the rib guides, which allowed their vertical motion during some impactor and sled tests. The agency was concerned the motion could affect the structural integrity of the ribs and that of the deflection potentiometers, and could also affect the accuracy of the deflection measurements. To address these concerns, the agency's Vehicle Research and Test Center (VRTC) modified the Build Level C dummy's thorax to incorporate the FRG (floating rib guide) system to prevent the compressed ribs from leaving the outside perimeter of the rib guides, and thereby prevent damage to the deflection measurement system and surrounding areas. Rib guides were used to ''float'' with the ribs as they expanded in the anterior-posterior direction during rib compression. This was intended not only to eliminate the problem of ribs' extending outside the boundaries of the rib guides, but also to retain the ribs in their initial plane and thereby prevent damage to the deflection potentiometer shaft. To further prevent damage (bending) of potentiometer shafts and damage to potentiometer housings, the rib stops were reshaped and changed from a flexible urethane material to vinyl-coated aluminum. The maximum lateral rib deflection of the dummy was also reduced from 69 mm to 60 mm to further protect the instrumentation.[2] The modified dummy was referred to as the ''SID–IIsFRG,'' the ''FRG'' indicating the addition of the floating rib guide and other modifications to the dummy.

The December 8, 2004 NPRM proposed to incorporate the SID–IIsFRG into Part 572. While NHTSA tentatively determined there was a need for the FRG modifications, the agency noted in the December 8, 2004 NPRM that there were other views as to the need for the FRG changes to the dummy (69 FR at 70954, footnote 21). The NPRM noted that Transport Canada, IIHS and the industry have used the SID–IIs Build Level C dummy to their satisfaction without the entirety of FRG modifications.

[2] The FRG design also encompassed other changes to improve the durability of the dummy. The shoulder rib guide of the dummy was reshaped and deepened beyond the front edge of the shoulder rib to keep the shoulder rib from moving vertically during its compression. The damping material of the shoulder rib assembly was made thinner and spanned the entire width of the steel band.

II. Response to the Comments on the FRG

NHTSA received comments on the December 8, 2004 NPRM from IIHS, FTSS, Autoliv, the Alliance of Automobile Manufacturers (the Alliance), Denton ATD, Advocates for Highway and Auto Safety, Toyota Motor North America, and several private individuals (Docket 18865). In addition, many entities responding to the May 17, 2004 NPRM on FMVSS No. 214 (Docket 17694) also commented on the proposal to use the SID–IIsFRG dummy.

All commenters responding to the issue of the need for the FRG design (Dockets 18865 and 17694) were strongly opposed to or were concerned about adopting the SID–IIsFRG dummy. Some commenters supported the use of an unmodified Build Level C dummy and/or a ''Build Level D'' dummy, which the commenters said would be a Build Level C dummy with many of the FRG enhancements developed by VRTC, except for the floating rib guide changes that constrain the vertical rib motion. Commenters believed that the Build Level C and Build Level D dummies were sufficiently durable for crash tests.

In opposing the SID–IIsFRG (October 14, 2004 comment to the FMVSS No. 214 NPRM (Docket 17694)), the Alliance stated that the OSRP SID–IIs Upgrade Task Group [3] had unanimously agreed to a majority of the proposed enhancements developed by NHTSA, ''which are recommended as either a running change to the Build Level C dummy or as major modifications to be incorporated into the Build Level D dummy.'' However, the Alliance emphasized, OSRP steadfastly maintained that there is no durability problem requiring the floating rib guide change to the dummy's thorax. The Alliance stated that NHTSA's Vehicle Research and Test Center (VRTC) (p. 11)—

> proposed the addition of floating rib guides to the SID–IIs dummy based on a small series of sled tests, including a single abdominal offset sled test in which the ribs were damaged and exited the original rib guides. The test was performed with an improperly positioned and improperly scaled abdominal plate that simulated a rigid armrest. This setup produced a very severe impact condition for the SID–IIs (AF05) dummy. Instead of being scaled for the AF05, the test was performed with an abdominal plate that was offset 100 mm, which are the test conditions for the ES–2 (AM50) dummy. Further, the 100 mm offset is at the extreme end of the range of armrest width in typical vehicles. In addition, the abdominal plate is rigid and therefore provided a more severe impact surface than do typically padded and deformable vehicle armrests. This test setup produced an impact condition for the AF05 dummy more severe than that of full-scale vehicle tests, since the dummy's ribs were damaged in the sled test but no rib damage occurred in the vehicle tests using the SID–IIs Version C.

[3] The Alliance stated that ''The OSRP SID–IIs Upgrade Task Group is responsible for coordinating, evaluating and approving any design modifications to the SID–IIs dummy, originally designed in 1994–95.'' *Id.*, page 8.

The Alliance further stated that the agency's concern about the accuracy of the acceleration and deflection measurements of the Build Level C dummy due to the ribs' not staying in place ''does not follow logically because it is quite normal to have the ribs deform during impact by expanding in the fore-aft dimension of the chest. The fact that they change shape and do not stay in place has nothing to do with the accuracy of the deflection measurements.''

IIHS also objected to the agency's FRG design, finding the FRG version of the SID–IIs to be ''an unacceptable and unnecessary compromise of the original dummy's biofidelity to address an unproven durability problem'' (March 4, 2005 comment to Docket 18865). IIHS stated:

> Not only have NHTSA's own vehicle crash tests failed to show any durability problems with the original dummy design, but Institute and industry experience confirms the dummy is durable enough for crash testing. As of October 2004 the Institute had conducted 48 side impact tests with the SID–IIs dummies positioned in the driver and rear outboard seating positions, for a total of 96 SID–IIs test exposures. Of these only 6 caused any damage to the dummy; in 4 tests the dummy's shoulder was damaged, and in 2 tests one of the abdominal ribs did not pass post-test verification. Similar trends are found in the Occupant Safety Research Partnership (OSRP) dataset, which includes tests conducted by DaimlerChrysler, General Motors, the Institute, and Transport Canada. Of the 241 SID–IIs test exposures (or 1,446 exposures to the dummies' individual ribs), only 21 tests (8.7 percent) caused any dummy damage; of these only 3 tests (0.3 percent of total rib exposures) exhibited any evidence of ribs catching on the vertical guides.

IIHS recommended that NHTSA adopt the SID–IIs Build Level C or the Build Level D dummy into FMVSS No. 214. IIHS stated (Docket 18865):

> Build Level D would incorporate many of the design upgrades currently in the FRG version that would improve the dummy while maintaining its high biofidelity rating. The changes IIHS supports for build level D include redesign of the shoulder rib and rib guide, neck mounting bracket, rib stops, and spine box. Using either C- or D-level SID–IIs would permit the agency to draw on the dummy's accumulated crash test experience

to incorporate rib deflection data among the FMVSS 214 requirements.

Some commenters expressed the view that the SID–IIsFRG dummy was itself not adequate for incorporation into 49 CFR Part 572. The Alliance stated that in full vehicle crash tests, there are significant differences in the shape and magnitude of the chest deflection responses of the SID–IIsFRG and the Build C dummy, with the SID–IIsFRG having ''greatly reduced'' deflections. The Alliance stated that researchers at Transport Canada and elsewhere found ''no flat-topping in the original SID–IIs, but severe flat topping in the SID–IIsFRG.'' Nissan stated (Docket 17694) that it has observed scratching of the SID–IIsFRG's rib guides created by rib contact and was concerned that this phenomenon could reduce test repeatability using the dummy over time, or may negatively affect the accuracy of the rib data.

Some commenters believed that it was more advantageous to adopt the SID–IIs Build Level C or Build Level D dummy than the SID–IIsFRG. The Alliance stated that the ISO 9790 biofidelity rating of the SID–IIsFRG is only ''fair'' (5.9), while that of the SID–IIs Build C was ''good'' (7.0). IIHS expressed serious concern that the FRG modification ''has considerably degraded'' the SID–IIs dummy's biofidelity. IIHS supported the Build Level C or D dummies in the rulemaking because it would permit the agency to incorporate rib deflection data in test requirements. IIHS stated:

> Without rib deflection limits for tests with the small dummy, the proposed side impact standard will not establish the same minimum levels of protection for vehicle occupants of various sizes. It is disappointing that part of NHTSA's reason for not including SID–IIsFRG rib deflection limits was the need to study the issue further. By favoring the FRG modified dummy the agency is ignoring the accumulated test experience with the original dummy.

Advocates expressed ''misgivings over the lack of chest deflection measurement capability for the 5th percentile SID–IIsFRG female dummy.'' Honda expressed concern that the SID–IIsFRG is not commonly used by automakers today (Docket 17694). Honda stated that, ''The use of SID–IIs [Build Level C or D] will expand because it is specified in the [industry's] voluntarily commitment on FMVSS No. 214.'' TRW said that using ''known and accepted'' test dummies could help expedite motor vehicle manufacturers' meeting their ''voluntary commitment'' to install inflatable side head protection systems (Docket 17694).

Agency response: After reviewing the comments and other information, we have decided not to adopt the entirety of the FRG design; this final rule adopts the SID–IIs Build Level D dummy (SID–IIsD) into 49 CFR Part 572 for use in FMVSS No. 214.[4] The SID–IIsD dummy has the enhancements of the SID–IIsFRG without the thorax design that prevents the compressed ribs from leaving the outside perimeter of the rib guides.

The SID–IIsFRG floating rib guide concept was developed to improve the durability of the SID–IIs dummy under extremely severe impact conditions. We have concluded that test results do not support a need for all of the floating rib guide design. The test conditions precipitating the development of the FRG were exceptionally severe and appear to be unlike vehicle crashes to which the crash dummy is exposed.

The OSRP task group and IIHS noted that the type of damage reported by NHTSA in VRTC sled tests was not experienced in their full scale vehicle crash tests. Our own testing bears this out. Since the time of the NPRM, NHTSA has used the SID–IIs (Build D) in over 24 oblique pole and MDB vehicle crash tests without seeing structural or functional problems with the dummy. In addition, the agency evaluated four SID–IIs Build D dummies in extensive component, sled, and pole and MDB vehicle crash tests without experiencing functionality and durability problems. See Appendix A to this preamble, ''Durability and Overload Analysis of the SID–IIsD Test Dummy.''

The Build D dummy has many of the enhancements of the SID–IIsFRG and some enhancements similar to FRG features, including new rib stops, larger motion ranges of potentiometers pivots, ½ inch diameter potentiometers, and enhancements to the shoulder structure. The shoulder enhancements address bending deformation (including gouging and/or delamination of the damping material) of the shoulder rib and damage to the deflection transducer. All of these enhancements have improved the structural integrity of the dummy and eliminated the need for floating rib guides.

We further believe that there are advantages to adopting the SID–IIsD dummy rather than the SID–IIsFRG beyond what is needed for the durability of the dummy. As noted by the commenters, while the FRG was very successful in containing the ribs within the rib guides and in preventing potentiometer-transducer failures, the floating rib guides added mass and additional stiffness to the ribs. As a result, the FRG became less human-like, rib deflections seriously reduced, and the shape of the deflection-time histories changed compared to testing under similar loading conditions without the FRG.[5]

IIHS uses the SID–IIs in its side impact consumer information program. IIHS noted in its comments to the NPRM that the Build Level D dummy would incorporate many of the design upgrades currently in the FRG version that would improve the dummy while maintaining the dummy's high biofidelity rating. Transport Canada plans to continue using the SID–IIs in its research program. Using the SID–IIs Build Level D dummy in FMVSS No. 214 means that the same dummy will be used in governmental and non-governmental consumer information and research programs. This consistency will enhance the testing of vehicles by making the test results from NHTSA, Transport Canada, IIHS and industry in many ways more comparable. Using the same test dummy will also more effectively focus research and design efforts on more consistent and effective countermeasures that will most successfully protect smaller stature occupants.

For the aforementioned reasons, after reviewing the comments to the May 17, 2004 (Docket 17694) and December 8, 2004 (Docket 18865) NPRMs and available test data, including the performance of the SID–IIs dummy in vehicle tests conducted with recent model year vehicles, we have decided to adopt the majority of the features of the proposed dummy, except for the floating rib guide that constrained the vertical motion of the dummy's ribs. This dummy adopted today is the SID–IIs Build Level D test dummy (''SID–IIsD'').

III. Other Issues

a. Overview

The agency received comments on the December 8, 2004 NPRM (Docket 18865) on issues other than those relating to the merits of the floating rib guide design. These included comments on: the biofidelity of the dummy; the adequacy of the agency's assessment of the repeatability and reproducibility of the dummy (Alliance and Autoliv); reported problems with the proposed pelvis plug test (the Alliance); reported sensitivity of the dummy to oblique impacts (the Alliance); the merits of the proposal to delete the shoulder with arm test

[4] A final rule adopting the Build Level D dummy into FMVSS No. 214 (49 CFR 571.214) will be published separately from this final rule.

[5] OSRP minutes dated September 18, 2004 and August 8, 2003. NHTSA Docket 25442.

(Autoliv); suggested improvements to the upper arm of the dummy (Toyota); and the injury assessment reference values that NHTSA should use in tests with the dummy. In addition, comments were received on the drawing package, qualification corridors, and other technical matters of the NPRM. These and other comments are addressed in this section III and in section IV of this preamble.

b. How This Final Rule Differs From the NPRM

In response to the comments and other information, we have reconsidered some of the tentative decisions we made in the NPRM. Notable changes are outlined below and explained in detail in this preamble. More minor changes are not highlighted here, but are discussed in the appropriate sections of this preamble.

- As discussed earlier in this preamble, we have not adopted the entirety of the ''floating rib guide'' components that were proposed, notably the floating rib guide design that restricted vertical movement of the dummy's ribs.
- At the urging of commenters, we have reviewed the proposed method of selecting and analyzing acetabulum plug characteristics needed to assure consistent and reliable acetabulum responses in compliance tests. After considering the results from a series of pendulum impact tests, we selected a 3 mm pre-crush requirement to determine the suitability of acetabulum plugs instead of the proposed 22–25 mm requirement.
- Qualification of the pelvis using the acetabulum load cell was proposed in the NPRM. This final rule includes a test of the iliac load cell to assure that the iliac load cell as mounted in the dummy is capable of repeatable and consistent response. The iliac test is similar to the acetabulum pendulum test, with the impact point centered on the iliac load cell.

c. Description and Reference Materials

Description

The following general description of the SID–IIsD is the same as that of the SID–IIsFRG provided in the NPRM. The descriptions are identical because the dummies are versions of the same.

The SID–IIsD has a mass of 44 kg (97 pounds) and a seated height of 788 millimeters (mm) (31 inches). The dummy is capable of measuring accelerations, deflections and/or forces in the head, thorax, shoulder, abdomen, lumbar spine, and pelvis body regions, as well as femurs.

The anthropometry and mass of the SID–IIsD are based on the Hybrid III 5th percentile frontal female dummy and also generally match the size and weight of a 12– to 13-year-old child. The head and neck designs are based on the Hybrid III 5th percentile female dummy. The legs are Hybrid III 5th percentile female design available also with femur load cell instrumentation.

At the same time, unlike the Hybrid III series of dummies, the SID–IIsD's torso construction is particularly oriented for assessing the potential for side impact injury. The dummy's upper torso is made up of a rigid metallic spine to which six spring steel bands lined with bonded polymer damping material are attached to simulate the impact performance of the human shoulder (1 rib), thorax (3 ribs) and abdomen (2 ribs). Linear potentiometers are attached from the ribs to the spine for compression measurements. Provisions are available for mounting tri-axial accelerometer packs to the spine at T_1 and T_{12} and at each rib.[6] Replaceable foam pads are secured directly to the ribs and a neoprene jacket covers the complete chest assembly. The upper torso accommodates the attachment of the neck at the upper end and the lumbar spine at the lower end.

A stub arm on the impacted side is attached to the lateral aspect of the shoulder through a three-axis load cell. Tri-axial accelerometer packs can also be installed at the shoulder and at the upper and lower parts of the stub arm for assessing injuries in upper extremities in side crashes.

The dummy's pelvis is a machined assembly with detachable hard urethane iliac wings at each side and covered by vinyl flesh. The pelvis design is shaped in a seated human-like posture and allows the attachment of the lumbar spine at its top and the legs at the left and right sides. The pelvis can be impacted from either side without any change in hardware. Foam crush plugs at the hip joint, which are replaced after each impact, are used to control the lateral pelvis response. The pelvis design allows the measurement of impact loads at the acetabulum and iliac wing as well as accelerations at the pelvis center of gravity (cg).

Reference Materials for the Dummy

The specifications for the SID–IIsD consist of: (a) A drawing package containing all of the technical details of the dummy; (b) an parts list; and (c) a user manual containing instructions for inspection, assembly, disassembly, use, and adjustments of dummy components. These drawings and specifications ensure that SID–IIsD dummies will be the same in their design and construction. The drawings, parts list and user manual are available for examination in the NHTSA docket for this final rule (Docket 25442). Copies of those materials may also be obtained from Leet-Melbrook, Division of New RT, 18810 Woodfield Road, Gaithersburg, Maryland, 20879, telephone (301) 670–0090.

d. Biofidelity

Biofidelity is a measure of how well a test device duplicates the responses of a human in an impact. As discussed in the NPRM, two methods are currently available for assessing the biofidelity of a dummy in side impact testing. These are: (a) An International Organization of Standardization (ISO) procedure, referred to as ISO Technical Report (TR) 9790, which determines the biofidelity of a dummy by how well the dummy's body segment and/or subsystem impact responses replicate cadaver responses in defined impact environments; and (b) a NHTSA Biofidelity Ranking System.[7] The latter method determines the dummy's biofidelity based on two assessment measures: the ability of a dummy to load a vehicle or some other type of an impact surface as a cadaver does, termed ''External Biofidelity''; and the ability of a dummy to replicate those cadaver responses that best predict injury potential, termed ''Internal Biofidelity.''

ISO Technical Report 9790 Methodology

The biofidelity requirements defined in ISO TR 9790 are based on two types of head drop tests, three types of lateral neck bending tests, four types of shoulder impact tests, six types of lateral thoracic tests, five abdominal test conditions, and thirteen lateral pelvis impact tests. The measured response values are assessed on their fit to the established cadaver response corridors.

The ISO rating system is based on a scale of 0 to 10, with 0 signifying total lack of biofidelity and 10 signifying that the body segment has a biofidelic response much like that of a human subject. Once the ratings are established for each body segment, the overall dummy's biofidelity is calculated and

[6] T_1—sensor location on the dummy's thoracic spine equivalent to the first cervical on the human thoracic spine. T_1—sensor location on the dummy's thoracic spine equivalent to the 12th cervical on the human thoracic spine.

[7] The NHTSA Biofidelity Ranking System method was reported by Heather Rhule *et al.*, in a technical paper in the 2002 Stapp Car Crash Journal, Vol. 46, p. 477, ''Development of a New Biofidelity Ranking System for Anthropomorphic Test Devices.''

its ranking determined using the following classification scale: 0 to ≤2.6 (Unacceptable); ≤2.6 to ≤4.4 (Marginal); > 4.4 to ≤6.5 (Fair); >6.5 to ≤8.6 (Good); >8.6 to ≤10 (Excellent).

The NPRM stated that the ISO methodology was used by OSRP members to evaluate the SID–IIsFRG in September 2004 (Technical Summary of OSRP–SIDIIs Upgrade,'' September 2004, Docket 18865). The SID–IIsFRG received an ISO Biofidelity rating of 5.9, which corresponds to a ''fair'' classification. Scherer et al. had rated the SID–IIs Beta prototype dummy a rating of 7.0, placing it in the ISO classification of ''good.''[8]

In the NPRM, the agency stated that a biofidelity rating of the SID–IIs and SID–IIsFRG compare favorably with other side impact dummies. The overall ES–2re[9] dummy's biofidelity rating was determined to be 4.6, while the SID (49 CFR part 572 subpart M) and EuroSID–1 dummies received ratings of 2.3 and 4.4,[10] respectively. The SID/HIII received an overall rating of 3.8 (63 FR 41468).[11]

Comments: In its comment, the Alliance provided recalculated ISO 9790 biofidelity scores for the SID–IIs Build Level C (SID–IIsC) and the SID–IIsFRG test dummies. The overall biofidelity score for the SID–IIsC dummy was 6.8 (classification of ''good''), while the SID–IIsFRG dummy had a score of 6.1 (''fair''). The commenter expressed concern, as did IIHS, that the FRG modification lowered the SID–IIsC dummy's biofidelity score.

Agency response: In the SID–IIs Upgrade Task Group draft meeting minutes for May 25, 2006, the OSRP provided calculations for the SID–IIsD and SID–IIsD $^{+}$ biofidelity ratings (Docket 25542). (This final rule SID–IIsD version is equivalent to the OSRP D^{+} version.) The SID–IIsD received an overall score of 6.0 (''fair'') and the SID–IIsD $^{+}$ a score of 6.2 (''fair''), which is comparable to the ISO 9790 rating of the SID–IIsFRG, while the overall biofidelity score for the SID–IIsC dummy was 6.8 (''good''). Table 2, below, ''Updated OSRP SID–IIs Biofidelity Ratings,'' shows the biofidelity scores for the SID–IIs C, FRG, D and D $^{+}$ dummies.

TABLE 2.—UPDATED OSRP SID–IIS BIOFIDELITY RATINGS

	ISO 9790 Biofidelity Scores for the SID–IIs (excellent >8.6 to 10; good >6.5 to 8.6; >fair >4.4 to 6.5; marginal >2.6 to 4.4; unacceptable 0 to 2.6)			
Body Segment/Build Level	''C''	FRG	''D''*	''D^{+}''**
Head Biofidelity (B1)	7.5	7.5	7.5	7.5
Neck Biofidelity (B2)	5.2	4.7	5.1	5.1
Shoulder Biofidelity (B3)	6.2	5.1	5.2	5.8
Thorax Biofidelity (B4)	7.9	6.6	5.2	6.6
Abdomen Biofidelity (B5)	7.4	6.9	7.6	7.7
Pelvis Biofidelity (B2)	5.5	5.2	5.3	4.3
Overall Biofidelity (B)	6.8	6.1	6.0	6.2

* Build Level D (BLD) by OSRP designation without VRTC upgrades for rounded shoulder rib guide.
** BLD^{+} by OSRP designation is equivalent to NHTSA designated SID–IIsD dummy with rounded shoulder rib guide.

As shown in the above table, the SID–IIsD has a very satisfactory ISO 9790 biofidelity rating. Its rating is markedly higher than that of the SID (ISO 9790 biofidelity rating of 2.3) and SID/HIII (ISO 9790 biofidelity rating of 3.8) side impact test dummies used today. Both of the latter dummies have performed well in the Federal motor vehicle safety standards, and have facilitated the installation of effective life-saving countermeasures.

NHTSA Biofidelity Ranking System

The biofidelity ranking system developed by NHTSA (Heather Rhule, et al., supra) consists of an assessment of the dummy's External Biofidelity and Internal Biofidelity. The Overall External and Internal Biofidelity ranks are an average of each of the external and internal body region ranks, respectively. A lower biofidelity rank indicates a more biofidelic dummy. A dummy with an External and/or Internal Biofidelity rank of less than 2.0 is considered to respond much like a human subject.

The NHTSA ranking system is based on a variety of cadaver and dummy exposures, such as head drop tests, thorax and shoulder pendulum tests, and whole body sled tests. The NHTSA ranking system also includes abdominal and pelvic offset sled test conditions. Each test condition is assigned a weight factor, based on a number of human subjects tested, to form a biomechanical response corridor and the relevance of the biofidelity test to the intended test environment. For each response requirement, the cumulative variance of the dummy response relative to the mean cadaver response (DCV) and the cumulative variance of the mean cadaver response relative to the mean plus one standard deviation (CCV) are calculated. The ratio of DCV/CCV expresses how well the dummy response duplicates the mean cadaver response: a smaller ratio indicating better biofidelity.

Although this method does not establish an ''absolute'' ranking scale, the ranks provide a relative sense of the ''number of standard deviations away'' the dummy's responses are from the mean human response. Rhule conducted an analysis and found that if the dummy's biofidelity ranking is below two, then the dummy is behaving similar to the human cadaver. The evaluation methodology provides a comparison of both dummy response to cadaver response as well as a comparison of two or more dummies.

The NPRM provided a comparison of external and internal biofidelities of SID–IIsFRG, the ES–2re and the SID/HIII test dummies. Data indicated that the SID–IIsFRG dummy had Overall External Biofidelity comparable to that of the ES–2re and better biofidelity than the SID/HIII dummy. At the body segment level, the SID–IIsFRG produced

[8] Scherer et al. ''SID IIs Beta+-Prototype Dummy Biomechanical Responses,'' 1998, SAE 983151.

[9] The ES–2re dummy is a 50th percentile European designed adult male side impact crash test dummy that the agency has proposed to use in the proposed upgrade of FMVSS No. 214 (69 FR 27990, *supra*).

[10] Byrnes, et al. ''ES–2 Dummy Biomechanical Responses,'' 2002, Stapp Car Crash Journal, Vol. 46, #2002–22–0014, p. 353.

[11] The biofidelity rating for the SID dummy used in FMVSS No. 214 is 2.3. The rating for the SID/HIII of 3.8, using the ISO method, reflects use of the special purpose side impact HIII head and neck as noted in 63 FR 41468, August 4, 1998.

better External Biofidelity ranks than the ES–2re in the Head/Neck, Thorax and Abdomen and worse ranks than the ES–2re in the Shoulder and Pelvis. The SID–IIsFRG produced better External Biofidelity ranks than the SID/HIII in all body regions except the Head/Neck. Based on the Overall External and Internal Biofidelity ranks, the agency tentatively concluded that the SID–IIsFRG and the ES–2re dummies were nearly equivalent and lower (better) than the SID/HIII dummy. The NPRM also noted that the SID–IIsC and the SID–IIsFRG dummy responses were substantially comparable to the mean cadaver responses and to each other. 69 FR at 70951, footnote 11.

To establish the biofidelity rankings for the SID–IIsD dummy, the agency reran some of the biofidelity tests using the SID–IIsD dummy (Heather Rhule et al., ''Biofidelity Assessment of the SID–IIs Build Level D Dummy,'' hereinafter Biofidelity Assessment report, April 2006, Docket 25442). These tests, conducted at the Medical College of Wisconsin (MCW), included:

(a) A rigid flat wall test at 6.7 m/s, one dummy, one test each—

- Flat wall (dummy's arm down);
- Pelvis lead (76 mm) with dummy's arm down;
- Abdominal lead (97 mm) with dummy's arm at 90 degrees from vertical forward;

(b) A padded wall test at 6.7 m/s, one dummy—

- Flat wall (dummy's arm down);

(c) And rigid and padded wall tests at 8.9 m/s, one dummy, one test each—

- Flat wall (dummy's arm down).

In reviewing the data from sled tests of the SID–IIs Build Level D at MCW, it was observed that the impact speed was faster than the impact speed from comparable SID–IIsFRG testing performed previously at the same lab. Because the Build Level D test results were intended to compare directly with the lower speed FRG test results, the force, displacement, and acceleration responses of the Build Level D dummy were scaled using the momentum and energy balance formulas to the delta V observed in the similar test with the FRG. The scaling factor is the ratio of the maximum delta V calculated from T12 lateral acceleration of the Build Level D and FRG dummies. NHTSA determined that the momentum equation (F*deltaT=m*deltaV) was appropriate to scale for force between two tests (F1/F2=deltaV1/deltaV2), under the assumption that the mass and deltaT are constant between the tests (i.e., the time period is the same) and the stiffness of the dummy is about the same at different deltaVs.

The actual process of scaling the Build Level D results was based on the measured change in velocity determined from the dummy's T12 lateral accelerometers. The delta velocity of the FRG dummy and the Build Level D (BLD) dummy was obtained by integrating the T12 lateral accelerometers, and the ratio of FRG to BLD delta velocity was calculated for each test. This ratio, shown in Table 3, was then used to scale results for the BLD dummy.

TABLE 3.—SCALE FACTORS USED TO CORRECT BLD DATA DUE TO INCREASED IMPACT VELOCITY

Test condition	SID–IIs dummy design	Test #	Maximum delta V calculated from T12 lateral acceleration (m/s)	FRG to BLD delta V ratio
HPF	BLD	301	13.1454	0.88806
	FRG	269	11.6739	
HRF	BLD	302	13.0473	0.93985
	FRG	270	12.2625	
LPF	BLD	292	9.60399	0.87947
	FRG	265,267	8.44641	
LRF	BLD	294	10.3005	0.9219
	FRG	268	9.49608	
LRA	BLD	303	7.848	0.8375
	FRG	275	6.5727	
LRP	BLD	296	8.95653	0.90361
	FRG	273	8.09325	

Tables 4 and 5 show the External and Internal Biofidelity ranks, respectively, for the SID–IIsFRG, SID–IIsD, SID/HIII and ES–2re dummies. The SID–IIsFRG and BLD and ES–2re ranks were calculated based primarily on sled testing at the Medical College of Wisconsin and impactor testing at VRTC and MGA. The SID–IIsFRG, SID/HIII and ES–2re biofidelity ranks have been calculated previously and presented in Docket 18865. The SID–IIsD dummy data traces and the ''standard'' response corridors are shown in Appendix A of the Biofidelity Assessment report, *id.*

External Biofidelity

Table 4 indicates that External Biofidelity of the FRG and BLD versions of the SID–IIs dummy both have similar overall ranks at 2.5 and 2.6, respectively. This biofidelity is very good, is similar to that of the ES–2re, and is better than that of the SID/HIII. The BLD External Biofidelity ranks are better than those of the SID–HIII for the shoulder, thorax, abdomen and pelvis. The head/neck biofidelity of the SID–HIII is somewhat better than the BLD, but both provide human-like responses. The BLD External Biofidelity ranks for the head/neck and thorax are better than those of the ES–2re. However, the ES–2re External Biofidelity ranks for the shoulder, abdomen and pelvis are better than those of the BLD.

TABLE 4.—EXTERNAL BIOFIDELITY RANKINGS OF SIDE IMPACT DUMMIES

	SID–IIsFRG	SID–IIsD	SID/HIII	ES–2re
Overall Rank	2.6	2.5	3.8	2.6
Head/Neck	1.8	1.8	1.0	3.7
Shoulder	2.6	2.1	5.1	1.4
Thorax	2.8	2.7	6.1	2.9

TABLE 4.—EXTERNAL BIOFIDELITY RANKINGS OF SIDE IMPACT DUMMIES—Continued

	SID–IIsFRG	SID–IIsD	SID/HIII	ES–2re
Abdomen	2.4	2.7	3.0	2.6
Pelvis	3.4	3.5	3.8	2.7

Internal Biofidelity

Internal Biofidelity of the FRG and BLD versions of the SID–IIs dummy (Table 5) have similar overall ranks at 1.5 and 1.6, respectively. As both ranks are less than 2.0, it indicates that both dummies would respond quite like cadavers when considering the instrumentation used within the dummy. Since the head design did not change between the FRG and BLD, the FRG data was used to rank the head for both the FRG and BLD, thus obtaining the exact same rank for both. The remainder of the body regions had similar ranks between the FRG and BLD, with the largest discrepancy being 0.5 in the abdomen.

The overall Internal Biofidelity of the BLD is the same as that of the ES–2re and similar to that of the SID/HIII. The BLD Internal Biofidelity ranks are better than those of the SID/HIII for the head, thorax and pelvis. Since the SID/HIII has no measurement capability in the abdomen, no rank was given. The BLD Internal Biofidelity ranks for the head and pelvis are better than those of the ES–2re. However, the ES–2re Internal Biofidelity rank for the thorax is slightly better than that of the BLD. Since the ES–2re has no measurement capability in the abdomen comparable to what can be measured in a post-mortem human subject, no rank was given.

TABLE 5.—INTERNAL BIOFIDELITY RANKINGS OF SIDE IMPACT DUMMIES

	SID–IIsFRG	SID–IIsD	SID/HIII	ES–2re
Overall Rank	1.5	1.6	1.9	1.6
Head	0.4	0.4	1.1	1.0
Thorax	1.8	2.1	2.2	1.8
Abdomen	2.0	2.5	n/a	n/a
Pelvis	1.7	1.5	2.5	2.0

Conclusion

The SID–IIsD and SID–IIsFRG Overall External and Internal Biofidelity ranks are quite similar. The SID–IIsD Overall External and Internal Biofidelity ranks are comparable to those of the ES–2re. The SID–IIsD Overall External Biofidelity rank is much better than that of the SID/HIII, but its Overall Internal Biofidelity rank is only slightly better than that of the SID/HIII.

The agency concludes that the SID–IIsD based on NHTSA Internal Biofidelity ranking of 1.6 is as humanlike, if not more so, than any other side impact dummy. Similarly, based on the ISO 9790 Biofidelity scoring methodology, the Build Level D dummy with a score of 6.2 (''fair'') has a much higher Biofidelity rating than all of the side impact dummies in current use. The agency concludes that all biofidelity indicators support the SID–IIsD dummy's suitability for use in occupant injury risk assessment in side impact crash testing.

e. Repeatability and Reproducibility (R&R)

1. Component and Sled Tests Generally

The agency's analysis of the repeatability and reproducibility [12] of the SID–IIs was based on component tests and a series of sled tests. In the tests, the impact input was carefully controlled to minimize the variability of external effects on the dummy's response. Component tests were conducted on the SID–IIs's head, neck, shoulder, thorax with arm, thorax without arm, abdomen, and pelvis acetabulum and iliac regions. In sled tests the primary measures of interest were the HIC, chest and abdomen deflections, T1, T12 and pelvis accelerations, lumbar spine and acetabulum loadings.

Component tests are better controlled than is possible in sled and vehicle tests, and thus produce more reliable estimates of the dummy's repeatability and reproducibility. Component tests are also used to qualify the dummy's performance relative to the established response corridors for each major body segment. That is, if the dummy's component is or becomes deficient, the qualification test will identify to the user that the component will not respond properly in impact tests, and that a replacement of parts should precede further testing.

Sled tests offer a method of efficiently evaluating the dummy as a complete system in an environment much like a vehicle test. The SID–IIs test dummies were positioned on a bench seat mounted to a sled. During the test, the SID–IIs dummies slid down the bench seat and impacted the rigid load wall. Sled tests established the consistency of the dummy's kinematics, its impact response as an assembly, and the integrity of the dummy's structure and instrumentation under controlled and representative crash environment test conditions.

2. Repeatability and Reproducibility Assessments

We used the Coefficient of Variation (CV) in percentage as a measure of repeatability. A CV value of less than 5 percent is considered excellent, 5–8 percent good, 8–10 percent acceptable, and above 10 percent unacceptable.[13]

Repeatability of the dummy was assessed on two levels. The agency first identified those measurements that comprise injury assessment reference values (IARVs) proposed or considered for use in the May 17, 2004 NPRM on FMVSS No. 214. The repeatability of those measurements was assessed based on the 10 percent CV limit. Second, the agency identified measurements that were not used in the proposed IARVs, but are of interest as monitored indicators of potential injuries. A CV above 10 percent value for these latter

[12] Repeatability refers to a similarity of responses of a single dummy measured under identical test conditions. Reproducibility refers to the smallness of response variability between different dummies of the same design under identical test conditions.

[13] ISO/TC22/SC12/WG5

measurements is not necessarily considered unacceptable.

The reproducibility assessment of the dummy is derived through statistical summation of data from repeatability tests of multiple dummies. Reproducibility is related more to the measurement of design quality, and manufacturing precision and consistency. Inasmuch as any dummy used for compliance purposes must conform to the performance specifications of Part 572, reproducibility is not a measure of the dummy's acceptance or exclusion from Part 572. However, if the population of dummies as a group exceeds the CV by ±15%, this would be a sign of concern that the dummy manufacturing process is flawed. The reproducibility of dummies is judged on the following qualitative scale: CV of 0–8% is ''excellent''; CV of 8–12% is ''good'', 12–15% ''acceptable''; and CV over 15% is ''poor.''

3. NPRM

The NPRM stated that two SID–IIsFRG dummies were tested and exposed to both component and sled test conditions multiple times to determine the dummy's ability to respond consistently in a human-like manner. The NPRM tentatively concluded that the two test dummies demonstrated excellent or good repeatability and reproducibility (R&R) in component and sled tests. The results of the component tests indicate ''excellent'' repeatability for the SID–IIsFRG dummy for all components except for the thorax with arm, which has a ''good'' rating. The results of the component tests generally indicated ''excellent'' to ''good'' reproducibility for the dummy for all components. The pelvis lateral acceleration was the only elevated reproducibility response at a CV of 9.1 (''acceptable''). The agency believed that some of this elevated variability was due to inconsistent force-deflection characteristics of the pelvis plug used in those dummies, which was not subjected to force-deflection limits that had been proposed in the NPRM. The results of the sled tests indicated generally excellent or good R&R results for the dummy. Instances of elevated CV for pelvis responses were thought to be due to the variability of the pelvis plug responses.

4. Comments on the NPRM

The Alliance disagreed with NHTSA's finding that the R&R of the SID–IIsFRG responses established the suitability for use in the agency side impact test programs, because only two dummies were evaluated. The Alliance argued for tests with more than two dummies in a reproducibility evaluation program, believing that R&R cannot be adequately assessed with only two dummies in one laboratory. Autoliv also was concerned that the assessment of the R&R of the dummies was based on a ''rather limited sample of dummies.''

5. Agency Response

As discussed above in this document, after considering the comments on the NPRM, NHTSA has decided to incorporate numerous SID–IIsFRG features, except for the proposed floating rib guide design, described in the NPRM into the SID–IIsD dummy. The SID–IIsD dummy has the design features that NHTSA wishes to adopt of the FRG design and not those that it has decided, after review of the comments, to be unnecessary. NHTSA also retained for the SID–IIsD essentially all of the qualification test procedures that were proposed in the NPRM for the SID–IIsFRG version, as supplemented with the shoulder test and the iliac test.

To fully assess the R&R of the SID–IIsD dummy, following the NPRM the agency evaluated four SID–IIsD dummies at two facilities. (These dummies are referred to by serial numbers 032, 033, 020 and 056.) The additional testing also addressed the concerns of the Alliance and of Autoliv about the sample size used in the previous R&R assessment. We analyzed the response data from R&R tests of these dummies, as well as data from qualification tests performed as our vehicle and sled test program progressed. The R&R and vehicle test programs yielded large amounts of response data from each impacted body area consisting of some 394 individual impact tests.[14]

The evaluation of the R&R of the SID–IIsD is described in the following technical reports (see Docket 25442): ''Repeatability and Reproducibility Analysis of the SID–IIs Build Level D Dummy in the Certification Environment,'' Jessica Gall, MGA, December 2005, and ''Repeatability, Reproducibility and Durability Evaluation of the SID–IIs Build Level D Dummy in the Sled Test Environment,'' Felicia L. McKoy et al, January 2006.

i. *Component Qualification Tests.* A. *Repeatability in Component Tests.* The initial assessment of the dummy's repeatability by component tests was performed with SID–IIsD dummies 032 and 033 upon their refurbishment with new body parts.[15] See ''Repeatability and Reproducibility Analysis of the SID–IIs Build Level D Dummy in the Certification Environment,'' *supra.*

Table 6 lists dummy responses from initial repeatability tests, consisting of five repeated sets of qualification test type impacts of dummies 032 and 033 (except for the iliac qualification test, which consisted of 5 repeated impacts each for iliacs L1 (left side) and R1 (right side) on dummy 033). (Repeated impact tests were performed on dummy 033 right iliac to determine if response differences existed between the left and right sides. Since the responses were virtually identical, the left and right side impact responses were merged.) The data are compiled and calculations made to include the following information for each repeated set: averages, standard deviations (SD), and coefficients of variation (CV). The data show that the CVs for repeatability of measurements covered by IARVs are all in the ''excellent'' range.

TABLE 6.—REPEATABILITY OF RETROFITTED SID–IIsD 032 AND 033 DUMMIES IN QUALIFICATION-TYPE TESTS

	Repeatability					
	Serial No. 032			Serial No. 033		
	Mean	SD	CV ***	Mean	SD	CV ***
Head						
Resultant Accel. (g)	n/a	n/a	n/a	n/a	n/a	n/a

[14] Listing of all responses and their statistical analysis may be found in the technical report in docket No.18865 under the title ''Development of Calibration Performance Specifications for the SID–IIsD Crash Test Dummy.''

[15] The dummies were originally SID–IIsFRG dummies. They were refurbished when they were converted to SID–IIsD dummies. Floating rib guide components constraining vertical rib movement were removed, and replaced by BLD designated parts. Worn parts were either refurbished or replaced with new ones.

TABLE 6.—REPEATABILITY OF RETROFITTED SID–IIsD 032 AND 033 DUMMIES IN QUALIFICATION-TYPE TESTS—Continued

	Repeatability					
	Serial No. 032			Serial No. 033		
	Mean	SD	CV ***	Mean	SD	CV ***
Peak X Accel (g)	n/a	n/a	n/a	n/a	n/a	n/a
Neck						
Peak D-Plane Rotation (deg)	n/a	n/a	n/a	n/a	n/a	n/a
Peak Lat. Flex Moment (N-m)	n/a	n/a	n/a	n/a	n/a	n/a
Time Moment Decay (ms)	n/a	n/a	n/a	n/a	n/a	n/a
Shoulder—Impact Speed (4.3 m/s)						
Shoulder Rib Deflection (mm)	33.5	0.09	0.26	33.6	0.27	0.89
Upper Spine Y Acceleration (G's) *	−18.4	0.23	1.27	−17.9	0.20	1.14
Thorax w. Arm—Impact Speed (6.7m/s)						
Impact Speed (m/s)	6.7	0.01	0.20	6.7	0.01	0.13
Probe Force (kN)	4.8	0.03	0.70	4.51	0.05	1.10
Shoulder Rib Deflection (mm)	37.6	0.70	1.86	39.0	0.41	1.05
Upper Thoracic Rib Deflection (mm)	29.0	0.16	0.55	30.1	0.29	0.97
Middle Thoracic Rib Deflection (mm)	33.6	0.37	1.09	33.7	0.31	0.91
Lower Thoracic Rib Deflection (mm)	34.8	0.50	1.42	35.3	0.44	1.25
Upper Spine Y Acceleration (g)	40.1	0.62	1.54	37.9	1.07	2.83
Lower Spine Y Acceleration (g)	31.6	1.40	4.41	29.3	0.72	2.47
Thorax w/o Arm—Impact Speed (4.3 m/s)						
Upper Thoracic Rib Deflection (mm)	35.8	1.04	2.90	37.6	0.68	1.81
Middle Thoracic Rib Deflection (mm)	42.3	0.58	1.36	42.5	0.58	1.37
Lower Thoracic Rib Deflection (mm)	39.3	0.62	1.58	39.8	0.71	1.79
Lower Spine Y Acceleration (g)	8.4	0.32	3.77	7.8	0.29	3.74
Abdomen—Impact Speed (4.3 m/s)						
Upper Abdominal Rib Deflection (mm)	40.6	0.48	1.18	41.8	1.41	3.37
Lower Abdominal Rib Deflection (mm)	38.2	0.78	2.03	39.3	1.35	3.44
Lower Spine Y Acceleration (g)	13.2	0.25	1.93	13.2	0.71	5.42
Acetabulum—Impact Speed (6.7 m/s)						
Pelvis Y Acceleration (g)	43.9	1.17	2.66	47.4	1.36	2.86
Acetabulum Force (kN)	3.9	0.06	1.42	3.9	0.08	2.13
Iliac—Impact Speed (4.3 m/s) **						
Pelvis Y Acceleration (g)	28.6	1.10	3.86	31.9	1.05	3.29
Iliac Force (kN)	4.0	0.09	2.34	4.4	0.15	3.48

* Second set of repeat shoulder qualification tests conducted solely to establish upper spine qualification corridors.
** Six different iliac wings and four different pelvis skins were used to formulate the statistics for these test responses using dummy 033.
*** CV=SD/Mean x 100.

B. *Reproducibility in Component Tests.* In Table 7 below, information on the reproducibility of dummies 032 and 033 under highly controlled, consecutive qualification tests are compared to the reproducibility of dummies 032, 033, 020 and 056 that were evaluated in conjunction with qualification tests performed as part of sled and vehicle tests. The reproducibility assessment was established by combining the responses of the dummies from all of the qualification tests and calculating the combined mean and the CV values for each set of tests. Data in Table 7 indicate that newly refurbished dummies 032 and 033 in repeated consecutive tests have slightly lower CV values than summation of all dummies that have been used in other crash tests. As some of the dummies have been subjected to more than 10 crash tests, this continuous use is reflected in slightly larger CVs, indicating a shift within the excellent towards the good category, and in only one instance (the lower spine acceleration value in the thorax without arm test) did the reproducibility shift into the good range.

TABLE 7.—REPRODUCIBILITY OF DUMMIES 032 AND 033 AND THE COMPOSITE OF ALL DUMMIES IN QUALIFICATION TESTS

	Serial No. 032 & 033 (newly retrofitted)			Serial No. 020, 032, 033 & 056		
	Mean	SD	CV ***	Mean	SD	CV ***
Head:						
Resultant Accel. (g)	n/a	n/a	n/a	128.2	4.32	3.37
Neck:						
Peak D-Plane Rotation (deg)	n/a	n/a	n/a	74.25	1.09	1.47
Peak Lat. Flex Moment (N-m)	n/a	n/a	n/a	42.1	1.48	3.52
Time Moment Decay (ms)	n/a	n/a	n/a	114.3	2.28	2.0
Shoulder Impact Speed (4.3 m/s)						
Shoulder Rib Defl. (mm)	33.5	0.21	0.63	33.4	1.65	4.93
Upper Spine Y Acceleration (g)	−18.2*	0.35*	1.9*	−18.2	0.32	1.77
Thorax w Arm—Impact Speed (6.7 m/s)						

TABLE 7.—REPRODUCIBILITY OF DUMMIES 032 AND 033 AND THE COMPOSITE OF ALL DUMMIES IN QUALIFICATION TESTS—Continued

	Serial No. 032 & 033 (newly retrofitted)			Serial No. 020, 032, 033 & 056		
	Mean	SD	CV ***	Mean	SD	CV ***
Shoulder Rib Deflect (mm)	38.3	0.92	2.41	35.6	2.74	7.70
Upper Rib Defl. (mm)	29.6	0.60	2.04	28.5	1.40	4.92
Middle Rib Defl. (mm)	33.7	0.32	0.96	32.5	1.21	3.73
Lower Rib Defl. (mm)	35.0	0.51	1.46	34.6	1.10	3.17
Lower Spine Accel. (g)	30.5	1.61	5.27	31.7	1.69	5.34
Thorax w/o Arm—Impact Speed (4.3 m/s)						
Upper Rib Deflect. (mm)	36.7	1.25	3.41	36.3	1.77	4.86
Middle Rib Deflect. (mm)	42.4	0.56	1.32	41.6	1.01	2.43
Lower Rib Deflect. (mm)	39.6	0.70	1.76	39.4	1.61	4.08
Lower Spine Accel. (g)	8.1	0.42	5.23	8.7	0.73	8.42
Abdomen—Impact Speed (4.3 m/s)						
Upper Rib Defl. (mm)	41.2	1.16	2.82	42.8	2.06	4.81
Lower Rib Defl. (mm)	38.7	1.19	3.07	42.5	3.24	7.62
Lower Spine Accel. (g)	13.2	0.50	3.84	12.58	0.71	5.68
Acetabulum—Impact Speed (6.7 m/s)						
Pelvis Lateral Accel. (g)	45.6	2.12	4.64	45.7	2.20	4.81
Acetabulum Force (kN)	3.9	0.07	1.67	4.02	0.16	3.89
Iliac—Impact Speed (4.3 m/s) **						
Peak Lateral Accel. (g)	30.0	2.01	6.70	29.6	1.73	5.86
Iliac Force (kN)	4.2	0.21	4.91	4.1	0.20	4.99

† New plug used for each test.
* Second set of repeat shoulder qualification tests conducted solely to establish upper spine qualification corridors.
** Six different iliac wings and four different pelvis skins were used to formulate the statistics for these test responses using dummy 033.
*** CV = SD/Mean × 100.

ii. *Sled Tests.* Sled tests of the SID–IIsD dummies were conducted to determine the repeatability and consistency of the dummy's impact response in an environment more similar to full vehicle crash tests than qualification-type tests. See, ''Repeatability, Reproducibility and Durability Evaluation of the SID–IIs Build Level D Dummy in the Sled Test Environment,'' *supra.*

The performance of each of the SID–IIsD dummies was evaluated in five repeated tests at 6.0 m/s. At the Medical College of Wisconsin, dummies 032 and 033 were tested in a deceleration sled. They impacted laterally a ''Heidelberg'' type three segment flat rigid wall with and without an armrest attached to it. In tests at the Transportation Research Center (TRC), test dummies 020 and 056 were placed in the HYGE sled to impact laterally a flat rigid wall with an armrest attached to it.

The SID–IIsD was evaluated using the test configurations to which the SID–IIsFRG was exposed (69 FR at 70952). The tests involved: (a) The dummy impacting a flat wall at 6.0 m/s with the lateral aspect of its torso, pelvis and lower extremities, with the dummy's arm oriented in the down position (lowest detent); and (b) tests conducted at 6.0 m/s with an abdomen offset block on the load wall, with the dummy's arm oriented 90 degrees forward to the inferior superior axis of the torso. The abdomen offset test provides a test environment with severe loading of the abdominal region.

A. *Flat Wall Sled Tests at 6.0 m/s.* Table 8 provides a summary of the responses of dummies 032 and 033 in flat wall tests at 6 m/s. The data is presented by the mean, standard deviation and percent CV for the responses of 5 sled tests for each dummy (repeatability) as well as their composite responses (reproducibility).

TABLE 8.—REPEATABILITY AND REPRODUCIBILITY OF SID–IIsD 032 AND 033 DUMMIES IN FLAT WALL SLED TESTS

	Repeatability						Reproducibility		
	Serial No. 032			Serial No. 033			Serial No. 032 & 033		
	Mean	SD	CV *	Mean	SD	CV *	Mean	SD	CV *
HIC	62.0	5.0	8.0	67.9	4.6	6.8	64.9	5.6	8.7
T1 acceleration	42.7	0.6	1.3	42.3	2.0	4.7	42.5	1.5	3.5
Shoulder Rib Defl. (mm)	41.4	1.9	4.5	41.3	0.8	2.0	41.4	1.5	3.5
Upper Rib Defl. (mm)	32.8	1.6	4.9	36.5	0.7	2.0	34.7	2.2	6.4
Middle Rib Defl. (mm)	37.0	2.0	5.3	40.3	0.7	1.7	38.7	2.2	5.8
Lower Rib Defl. (mm)	38.7	2.5	6.5	44.2	0.8	1.9	41.4	3.3	8.0
T12 acceleration	59.1	2.8	4.7	57.9	2.7	4.6	58.5	2.8	4.8
Abd.Upper Rib Defl. (mm)	29.6	3.4	11.5	39.5	0.9	2.2	34.6	5.5	16.0
Abd.Lower Rib Defl. (mm)	14.9	0.5	3.4	16.8	0.8	4.5	15.6	1.1	7.1
Pelvis Lateral Accel. (g)	68.0	4.2	6.2	71.1	8.8	12.3	69.5	7.1	10.2
Acetabulum Force (kN)	3.89	0.185	4.8	3.9	0.039	1.0	3.89	1.34	3.4

TABLE 8.—REPEATABILITY AND REPRODUCIBILITY OF SID–IIsD 032 AND 033 DUMMIES IN FLAT WALL SLED TESTS—Continued

	Repeatability						Reproducibility		
	Serial No. 032			Serial No. 033			Serial No. 032 & 033		
	Mean	SD	CV*	Mean	SD	CV*	Mean	SD	CV*
Iliac Force (kN)	−0.28	0.001	4.4	−0.26	0.002	7.0	−0.27	0.002	6.7

*CV = SD/Mean × 100.

1. *Repeatability in Flat Wall Sled Tests at 6.0 m/s.* The data in Table 8 for each of the dummies indicate excellent and good CV's for repeatability for all IARV-based measurements. For non-IARV measurements, the repeatability for most measurements is also good to excellent, with only a few exceptions. For dummy 033, the pelvis lateral (Y) and resultant accelerations have CVs of 12.3 and 12.4, respectively. For dummy 032, the abdomen rib #1 displacement has a CV of 11.5. The above test results indicate that the dummy is capable of providing excellent and good repeatable measurements in flat wall rigid surface impact environment.

2. *Reproducibility in Flat Wall Sled Tests at 6.0 m/s.* The data presented in Table 8 shows the reproducibility of the two dummies for IARV measures are at the excellent level. For non-IARV measurements, the reproducibility for pelvis lateral acceleration at 10.2 is considered good, and at 16.0 the upper abdominal rib deflection is just outside the satisfactory range at the poor level.

B. *Abdominal Offset Sled Tests at MCW.* The abdominal offset test set-up with simulated armrest was the same as in 6.0 m/s flat wall tests, except that the barrier had a wooden armrest attached to the impact surface, and the dummy's arm was oriented 90 degrees forward of torso superior-inferior axis. The simulated wooden armrest was 58 mm deep, 76 mm wide, 250 mm long. Dummies 032 and 033 were employed at MCW for these tests.

During the repeatability assessment of dummies 032 and 033 at MCW, several body segments showed CV measures that were not rated as either good or excellent repeatability. A thorough video review was conducted on the kinematics of the dummies and their interaction with the armrest and impact wall. The review of the crash event indicated that early armrest contact of the abdomen caused the dummies' upper torso to start leaning somewhat towards the barrier. During this process, the shoulder rib of the dummy interfaced with and became ''snagged'' by the upper edge of the thoracic force plate, causing the shoulder to dwell in the hung-up position for several milliseconds. The snagging was particularly evident in tests SD320 and SD322, in which the shoulder force went into tension after 70 ms. The snagging interaction also changed the profile of the shoulder loading curve of these two tests compared to the other three tests in the series. Inasmuch as the rest of the tests also indicated the effects of snagging, though to a lesser extent, it was decided to redo the test series with a higher load cell wall using the HYGE sled at TRC.

C. *Abdominal Offset Sled Tests at TRC.* In view of the experience with shoulder snagging at MCW, the agency repeated the armrest test series at TRC with newly refurbished dummies 020 and 056 in the HYGE sled. The test set-up was the same as at MCW except that the upper edge of the barrier thoracic loading plate was set approximately 2.5 in above the shoulder pivot.

Table 9 provides a summary of peak responses of dummies 020 and 056 in the TRC sled test series with simulated arm rest.

TABLE 9.—REPEATABILITY AND REPRODUCIBILITY OF SID–IIsD 020 AND 056 DUMMIES IN FLAT WALL SLED TESTS WITH SIMULATED ARMREST

	Repeatability						Reproducibility		
	Serial No. 020			Serial No. 056			Serial No. 020 & 056		
	Mean	SD	CV*	Mean	SD	CV*	Mean	SD	CV*
HIC	80.7	1.4	1.7	81.3	2.8	3.4	81.0	2.2	2.7
T1 acceleration	59.2	5.7	9.7	53.4	5.6	10.5	56.3	6.4	11.3
Shoulder Rib Defl. (mm)	49.1	0.5	1.0	53.2	0.8	1.5	51.2	2.1	4.2
Upper Rib Defl. (mm)	26.4	0.7	2.6	24.7	0.4	1.7	25.6	1.0	4.0
Middle Rib Defl. (mm)	11.7	0.2	1.6	11.5	0.3	2.4	11.6	0.3	2.2
Lower Rib Defl. (mm)	12.6	0.4	3.0	12.7	0.3	2.3	12.7	0.3	2.7
T12 acceleration	38.3	1.7	4.3	37.5	1.7	4.4	37.9	1.7	4.5
Abd. Upper Rib Defl. (mm)	49.6	0.2	0.4	49.1	0.2	0.4	49.3	0.3	0.7
Abd. Lower Rib Defl. (mm)	48.2	0.9	1.8	45.7	0.4	0.8	47.0	1.4	3.0
Pelvis Lateral Accel. (g)	72.5	0.6	0.8	65.1	0.9	1.4	68.8	3.8	5.5
Acetabulum Force (kN)	3.44	0.03	0.9	3.36	0.05	1.5	3.40	0.55	1.6
Iliac Force (kN)	−0.32	0.005	1.8	−0.29	0.005	1.6	−0.30	0.016	5.3

*CV = SD/Mean × 100.

1. *Repeatability in Abdominal Offset Sled Tests at TRC.* Repeatability of the responses for IARV assessment in sled tests of dummies 020 and 056, as shown in Table 9, were all excellent, except that the T1 acceleration of dummy 20

had a CV at 9.7 and a CV of 10.5 for dummy 56 which is borderline acceptable.

The good to excellent CVs in repeatability tests of the dummies conducted at TRC illustrate that the arm snagging by the upper top edge of the barrier was the cause of poor dummy repeatability at MCW and that the dummy itself might not be the source of the problem.

2. *Reproducibility in Abdominal Offset Sled Tests at TRC.* To assess the reproducibility of dummies in sled tests, the repeatability responses of common measurements for both dummies were pooled for the calculation of mean response values, standard deviations and their respective CVs. Similar to flat wall sled tests, data in Table 9 indicate that armrest tests on the whole have shifted somewhat towards wider variability from their individual repeatability values. The addition of the armrest however, has not altered the reproducibility levels of the dummy responses. All pertinent IARV values are well within excellent reproducibility range.

iii. *Conclusion.* To enhance the quality and the quantity of available data, the agency evaluated four SID–IIsD dummies at two facilities. The response data from the dummies in sequentially repeated component tests indicated the repeatability and reproducibility of the dummy's impact responses to be excellent to good. Continued qualification tests of the four SID–IIsD dummies during their extensive use in sled and vehicle crash tests produced somewhat higher levels of response variability in component tests, but not enough to shift them out of excellent and good repeatability and reproducibility ranges. Nearly all of the dummy responses corresponding to IARVs injury assessment values fell into good to excellent repeatability categories. In addition, we found reasonably good match and overlap of dummy responses and respective coefficient of variation (CV) values between NHTSA SID–IIsD and a much larger SID–IIsC dummy population reported by FTSS in docket comments (''Development of Calibration Performance Specifications for the SID–IIsD Crash Test Dummy,'' *supra*). This finding of a good match confirms that the upgrades to bring the SID–IIsFRG to the SID–IIsD level have not affected either the response or the repeatability of the dummy.

The SID–IIsD dummies were evaluated for repeatability and reproducibility in a variety of sled tests. The SID–IIs dummies showed the repeatability and reproducibility of the dummy's responses to be excellent to good for the relevant injury assessment measurements under consideration for use in FMVSS No. 214, as proposed at 69 FR 27990. For the reasons provided above, the agency concludes that the SID–IIsD dummy is a suitable, reliable and consistent dummy to warrant incorporation into 49 CFR Part 572 and FMVSS No. 214.

f. Pelvis of the Dummy

The agency noted in the NPRM that it was concerned about the repeatability of the data obtained in tests of the SID–IIs's pelvis (69 FR at 70592). As discussed in the NPRM, during the agency's evaluation of the R&R of the dummy, NHTSA observed that some of the data traces of the dummy's pelvis acceleration showed an inconsistent first peak in the data trace that was generated by the probe's impact.[16] NHTSA believed that the inconsistency of the first peak acceleration response could partly be attributed to an absence of control over aspects of the dummy that affect the consistency of the pelvis responses. To improve the consistency of the pelvis responses, the NPRM included provisions that provide checks on the performance of various parts of the dummy's pelvis.

1. Pelvis Plug

In the pelvis qualification test developed by dummy manufacturer FTSS, the pendulum impact probe is centered on the pelvis plug that is mounted within the pelvis flesh cavity in front of and in line with the acetabulum load cell's longitudinal axis at the H-point of the dummy. Because there was practically no control over the stiffness characteristics of the SID–IIs plugs, the agency believed that inconsistency of the first peak acceleration response was caused by variability of the crush characteristics of the pelvis plugs (*i.e.*, variability of the resistance force during compression) rather than by other characteristics of the dummy (69 FR at 70953). Thus, to improve the consistency of all of the dummy's pelvis responses as well as the force values measured by the impact probe, the agency proposed to control the crush characteristics of the pelvis plug.

NHTSA developed a force-displacement corridor for the pelvis plug and a test procedure for measuring the force-displacement characteristics of the plugs. The proposed procedure involved evaluating a plug by quasi-statically compressing it to a deflection range between a proposed range of 22 to 25 mm and a corresponding resistance force between 1920 and 2160 Newtons (N) at minimum compression and 2000 to 2240 N at maximum compression. Under the proposed procedure, only plugs that met the specified force levels at prescribed compression would be ''certified'' for use in a side impact test using the dummy.[17]

Comments Received: The Alliance believed that the 22–25 mm deflection range was excessive. The commenter stated that FTSS conducted ''numerous tests to understand the effects of different amounts of pre-crush on the pelvis plug and has tentatively determined that a 2 mm pre-crush provides the greatest consistency for the quasi-static force deflection performance of the pelvis plug.'' FTSS in its comments noted that it has evaluated SID–IIs dummies with a variety of plugs having different pre-crushes. It observed ''that the plug properties change after each test if the quasi-static compression is higher than 3 mm. With 25 mm of compression the plug properties change significantly, which stiffens the pelvis response as well''. FTSS further stated that studies of plugs pre-crushed to a number of depth levels show that ''* * *the plug properties have no noticeable change with a 2 mm compression specification. The 2 mm compression can be repeated without damaging the plug. The tests can also distinguish between plugs with different stiffness.''

Agency Response. Adopting a force-displacement corridor for the pelvis plug and the proposed test procedure to control the crush characteristics of the pelvis plug are warranted to improve the consistency of the dummy's pelvis responses. However, upon review of the Alliance and FTSS comments, the agency evaluated the effects on pelvis response by plugs of several pre-crush depths. We have determined that a 22–25 mm crush specification is too high and does stiffen the pelvis response excessively. We have also determined

[16] ''Summary of the NHTSA Evaluation of the SID–IIsFRG Side Impact Crash Test Dummy Including Assessment of Durability, Biofidelity, Repeatability, Reproducibility and Directional Sensitivity'' (November 2004), Docket 18865.

[17] A pelvis plug can only be used once per either vehicle crash test or pelvis qualification application. In the pelvis qualification test procedure under consideration, a certified plug is inserted into the pelvis cavity of the dummy and the dummy's pelvis is qualified according to the Part 572 test procedure. Since the pelvis plug can only be used once, after the dummy's pelvis is qualified, the plug must be discarded and a new ''certified'' plug is inserted into the pelvis cavity prior to the vehicle crash test. The agency stated in the NPRM that it believed that ''Carefully controlled and certified crush characteristics of the plugs will assure that their use will produce consistent and reliable pelvis response in the impact environment.'' *Id.*

that a nominal 3 mm pre-crush procedure would more assuredly sort out differences between plugs having different crush properties than a 2 mm pre-crush procedure. Accordingly, we selected a compression force requirement that pelvis plugs must exhibit when pre-crushed to a depth of 2.5–3.5 mm. The pelvis plug crush development is discussed in the technical report entitled, ''SID–II Pelvis Plug Certification Development,'' Alena Hagedorn and Heather Rhule, May 3, 2006, Docket 25442. The pre-crush procedure and certification requirements are set forth in the plug drawing 180–4450.

2. Iliac Load Cell

Along with specifying proposed stiffness characteristics for the pelvis plug to improve consistency in the pelvis responses, the December 8, 2004 NPRM proposed performance limits on the peak acceleration of the pelvis and the peak force responses of the acetabulum and iliac load cells when subjected to the proposed pelvis qualification test. However, in that test, the impact probe contacts an area of the dummy covering just a small part of the iliac load cell, resulting in a minimal force on the iliac load cell.[18] (See ''SID–IIs Iliac Certification Development,'' Alena V. Hagedorn, August 2006, Docket 25442.) A question arose as to whether the qualification procedure for the pelvis should more fully assess the properties of the iliac load cell. The Alliance noted in its comment to the NPRM (Docket 18865–35) that there could be higher loads from the iliac load cell than the acetabulum load cell, and suggested that the qualification test should limit both the iliac and acetabulum loads. We too observed that in agency pole and MDB side crash tests, impacts into the iliac area were occurring quite frequently and at magnitudes sometimes equaling and sometimes exceeding the loadings imparted to the acetabulum. Because the May 17, 2004 NPRM on FMVSS No. 214 proposed that the *sum* of the acetabular and iliac forces would be used for the pelvic injury criterion, it appeared prudent to have a procedure that checks the response consistency of the iliac load cell as installed in the dummy's pelvis.

Agency Response. After considering the comments and other information, the agency has decided that the proposed pelvis qualification test should continue to measure the properties of the acetabulum load cell, and should also have a comparable procedure that involves impacting the iliac region for assessing the properties and repeatability of the iliac load cell response. The pelvis test will consist of the acetabulum impact test, and an impact test conducted on the iliac load cell area of the pelvis as well (see ''SID–IIs Iliac Certification Development,'' *id.*). In the iliac load cell test, a 13.97 kg impactor is accelerated to 4.3±0.1 meters per second (m/s) and directed laterally into the pelvis such that its impact surface strikes the centerline of the iliac access hole in the iliac load cell. Performance limits are adopted for peak impactor and pelvis lateral accelerations and peak iliac forces. In addition, the procedure calls for use of a thin steel plate between the iliac wing and iliac load cell to prevent the iliac wing urethane material from deforming and offloading a portion of the iliac load cell measurement, which can affect the repeatability of test results. *Id.* The iliac test procedure will ensure the validity and repeatability of the data produced by the iliac load cell and the pelvic responses of the dummy.

3. Iliac Wing

During the course of NHTSA's R&R evaluation of the SID–IIsD, the agency observed that our SID–IIs set of left side wings had been used extensively for several years in numerous crash exposures, and was showing signs of wear. The agency decided to obtain six new iliac wings from the dummy manufacturer producing the dummies at the time (FTSS) for iliac R&R tests. During quasi-static and dynamic impact tests of the six new iliac wings, it was observed that the wings produced approximately 20% lower impact responses (softer) than previously-tested wings. NHTSA contacted FTSS and was informed that formulation of the urethane materials for currently-manufactured wings changed in 2004, as the material previously used was no longer available. (Agency memorandum, June 1, 2006, Docket 18865, number 18865–36.)

All agency vehicle and sled testing of the SID–IIs dummies was done with pelves equipped with pre-2004 iliac wings. We estimate[19] that in crash tests the softer iliac wings would lower the average driver occupant pelvis force approximately 8% and that of the passenger about 3%. In only one of 25 dummy occupants responses reviewed would the pelvis IARV change from just being above the IARV limit to just being below. In view of these findings, the agency decided to specify the softer iliac wing for the SID–IIsD dummy. Accordingly, all of the pendulum response data have been revised to reflect the softer iliac wings.

g. The Shoulder With Arm Test

Although a shoulder qualification test in which the dummy's shoulder has to meet deflection and acceleration limits was described in the FTSS user manual for the SID–IIs dummy, the agency tentatively concluded that the qualification test was redundant to a thorax with arm test and was thus unnecessary. The agency made this tentative determination because both the shoulder with arm test and the thorax with arm test produced identical shoulder response values in our evaluation of the dummy.

Comments on the NPRM: Both Autoliv and the Alliance urged the agency to adopt the separate shoulder qualification test developed by FTSS. The commenters believed that the shoulder test provides needed data specifically about the shoulder rib performance, and that it can influence dummy kinematics in full scale crash tests.

Agency Response: We agree with the commenters that the shoulder with arm test has merit, and that it should be included in today's regulation. The thorax with arm test is conducted with the dummy's arm in the ''down'' position, with the impact probe contacting the dummy 93 mm below the centerline of the shoulder yoke assembly arm pivot (measured along the length of the arm). The shoulder with arm test is conducted with the arm positioned so that it points forward at 90 degrees relative to the centerline of the dummy's thorax, with the pendulum impact probe impacting the centerline of the rubber shoulder plug.

The shoulder with arm test is needed to assess properly the performance of the dummy's shoulder. In the agency's pole and MDB tests, we observed that the shoulder of the small female dummy was one of the first body segments to contact the vehicle structure. Because of this, we believe that the response of the shoulder has implications on subsequent dummy kinematics and impact responses and should thus be evaluated in a separate qualification test. To assure that the shoulder impact response is not influenced by the arm's interaction with parts of the torso, the

[18] The NPRM proposed in § 572.197(c)(4) that the peak iliac wing force (load cell) response would have to be not less than 524 N and not more than 730 N. Because the impact probe in the proposed procedure barely exercised the iliac load cell, the proposed iliac load cell loads were much less than the proposed acetabulum loads.

[19] Based on calculated adjustments of the total force on the pelvis by taking into account lower impact responses of the softer iliac wing.

test procedure requires the arm of the dummy to be in the raised position.

Accordingly, this final rule includes a separate shoulder with arm test. The test specifies that the shoulder is impacted with a 14 kg, 120.7 mm diameter probe at 4.4 m/s. The impact probe experiences a maximum deceleration of not less than 14 g and not more than 18 g, and the concurrent shoulder deflection is between 30–37 mm. Peak lateral acceleration of the upper spine (T1) is not less than 17 g and not more than 19 g.

h. Other

1. Directional Impact Sensitivity

The NPRM stated that limited NHTSA tests indicated that the SID–IIsFRG dummy's thoracic and abdominal rib deflections were reduced in +30 and +15 degree pendulum tests, as compared to deflections resulting from pure lateral pendulum impacts. Also, the SID–IIsFRG's peak lateral acceleration of the upper and lower spines in oblique pendulum impacts showed, as compared to non-oblique lateral impacts, elevated ratios (compared to non-oblique) of the upper spine in abdominal impact at +15 degrees (1.27), and higher ratios of lower spine (3.22) and upper spine (2.20) accelerations in +30 degree impacts. The agency explained, however, that the loading of the dummy in the pendulum tests is unlike the loading experienced in a vehicle crash test. The agency tentatively concluded that, while the dummy demonstrated some sensitivity to impact direction in the pendulum tests, this demonstration has not been established as being relevant to loading conditions in vehicle tests.

Comments on NPRM: The Alliance said it believed that laboratory pendulum tests show that the SID–IIs dummies ''exhibit sensitivity to impact direction that can adversely affect the ability of the dummy to accurately measure deflection* * *. As the impact angle increases, the peak rib deflection decreases.'' The commenter believed that in single rib oblique angle pendulum tests, the Build Level C rib was able to deflect more freely than the FRG rib, but this caused the potentiometer shaft to be oriented off axis to the housing, which resulted in the shaft scraping along the inside of the housing causing noise in the data response. The commenter believed that based on these data, it would be premature to require thoracic injury criteria (deflection and acceleration) in oblique loading conditions for the SID–IIsFRG.

Agency Response: With regard to comments pertaining to the effect of the floating rib guides on the SID–IIs's deflection measurement capabilities, this final rule does not adopt the guide mechanism. With regard to comments opposed to the use of SID–IIs dummies in oblique impacts to measure rib deflection, NHTSA wanted to obtain more information on the SID–IIsFRG's rib deflection measurement capability under oblique loading conditions before proceeding with a proposal limiting rib deflections in oblique side impact tests (69 FR at 28006). We did not propose to use rib deflections in FMVSS No. 214, and the final rule on adopting the pole test into FMVSS No. 214 will not include an injury assessment reference value limiting the rib deflection of the SID–IIsD.

However, we do not agree with the comments opposing use of the dummy's chest acceleration measurements in oblique impacts. In our vehicle pole and MDB test program using the SID–IIsD, we did not observe ''noise'' in the data responses caused by the potentiometer shaft scraping along the inside of the housing or by any other factor. The SID–IIsD's acceleration responses in vehicle crash tests appeared to be fully satisfactory (see Section V of this preamble, ''NHTSA Crash Test Experience,'' *infra*), as were the deflection responses.

We also do not believe that the SID–IIsD's response characteristics in the oblique pendulum tests demonstrate that the dummy is unsuitable for assessing the risk of thoracic injury in oblique vehicle tests. The two test environments are very different. The pendulum has a small and rigid impact face and a relatively small mass that is intended to load a specific localized region of the dummy. In contrast, in a vehicle crash test, an intruding vehicle structure loads the dummy in multiple areas during a collision. The intruding area is usually fairly large, is typically energy absorbing, changes its configuration, and changes its direction of impact force during the crash. No commenter provided vehicle crash test data showing consistent increases or decreases in the dummy responses due to oblique loading. Further, as noted in the NPRM, the directional sensitivity of the dummy in ± 15 degree impacts appears at most comparable to or less than those of other side impact dummies. The agency's 49 CFR part 572, subpart F SID dummy has been successfully used in FMVSS No. 214's oblique MDB impact since 1990.

2. Toyota Suggests an Improved Upper Arm

Toyota stated in its comments that the current SID–IIs upper arm is not biofidelic and that it negatively affects the thoracic rib responses. Toyota stated that the SID–IIs upper arm is stiffer, smaller and lighter than the human arm. The commenter believed that the arm increases deflection responses of the upper and middle thoracic ribs. Toyota stated that it has developed a biofidelic upper arm, which was used in Insurance Institute for Highway Safety (IIHS) 50 km/h side impact tests. According to Toyota, when compared to the results measured by the current SID–IIs arm, the upper rib deflection for the driver was reduced by 4.3 mm. Toyota claims that the reductions are even more pronounced for the rear passenger, showing upper and middle thoracic rib deflections lowered by 13.5 mm and 7.6 mm, respectively, as well as a decrease in upper rib acceleration. Toyota noted that the modified arm resulted in a slight decrease in shoulder biofidelity, but overall whole dummy biofidelity was improved from 6.24 to 6.35. Toyota believed that the biofidelity rating of the SID–IIs prototype with the modified arm would maintain an overall rating of ''fair.''

Agency Response: Toyota has not established the need for or usefulness of the new arm as it relates to the FMVSS No. 214 rulemaking underway or generally to the prediction of the risks of occupant injury. We do not believe that this rulemaking should be delayed to ascertain the improvements to the SID–IIs's arm. The OSRP is compiling data on the Toyota proposed arm modifications and will be examining their effect on the biofidelity and usefulness of the dummy. Meanwhile, NHTSA believes that the current arm of the dummy is acceptable. The agency is satisfied with the biofidelity of the current SID–IIs arm and will proceed with this rulemaking to adopt the Build Level D dummy into part 572.

3. Injury Assessment Reference Values

In the May 17, 2004 NPRM on FMVSS No. 214, NHTSA proposed the following injury assessment reference values (IARVs) for use with the SID–IIs: HIC_{36} would be limited to 1000; lower spine lateral acceleration would be limited to 82 g; and the sum of the measured acetabular and iliac force would be limited to 5,100 N. The agency did not propose in the May 17, 2004 NPRM to limit chest deflection because the agency wanted to obtain more data on the rib deflection measurement capabilities of the dummy.

Comments Received: The agency received comments on the IARVs in response to both the May 17, 2004 NPRM (Docket 17694) and the December 8, 2004 NPRM (Docket 18865). Comments on the proposals in the FMVSS No. 214 rulemaking on the IARVs used with the SID–IIs will be addressed in that rulemaking proceeding rather than in today's final rule. (These comments include, for example, whether FMVSS No. 214 should limit lower spine (T12) acceleration of the SID–IIs.) Comments relating to the ability of the dummy to measure the relevant injury assessment values accurately and with acceptable repeatability and reproducibility have been addressed in this final rule. All tests conducted and/or analyzed to support the incorporation of the SID–IIsD dummy into Part 572 have shown reliable and repeatable responses suitable for the qualification testing required.

4. Reversibility

The NPRM explained that the SID–IIs is designed to have equivalent performance when impacted from either the left or right side. Most agency tests have been left side impacts. To convert the dummy's impact side from left to right side and vice versa, the entire dummy's thorax, abdomen, and shoulder structure, upon disengagement of the neck and of the lumbar spine at the lower torso interfaces, is rotated as a unit around the vertical axis with respect to the neck and the lumbar spine without any further modifications.

No comments were received on the reversibility of the dummy. The agency has determined that the dummy is appropriate for use for both right and left side impacts. The method for reversing the dummy for use in either left-or right-side impacts is discussed in the Procedures for Assembly, Disassembly and Inspection (PADI) document for the SID–IIsD dummy.

i. Test Dummy Drawing Package

The SID–IIs test dummy is specified by way of a drawing package, parts list, PADI users manual, and performance qualification tests. The two-dimensional drawings and the PADI ensure that the dummies are the same in their design and construction. The performance qualification tests serve to establish the uniformity of dummy assembly, structural integrity, consistency of impact response and adequacy of instrumentation. The repeatability of the dummy's impact response in vehicle certification tests is thereby ensured.

Both Denton ATD (DATD) and FTSS suggested changes to the drawing package. DATD believed that to be ''complete,'' the specification package must have a ''definition of all 3 dimensional shapes with a pattern (definition of surfaces) with tolerances and complete material specifications.''

1. Three Dimensional (3-D) Shape Definitions

DATD recommended that NHTSA specify 3-D patterns, either physical or electronic, ''for all complex dummy parts.'' DATD suggested that NHTSA should make available physical patterns made from stable materials, and that the 3-D patterns ''must be stored and maintained by NHTSA to have traceability for the rule, and must be available now and as long as the rule is in effect to anyone who wants to verify the basic shape of dummy components or start building the dummy.''

Agency Response: We are denying the request to provide 3-D patterns to specify the dummy. The SID–IIsD drawings are comparable in detail to all other dummies previously incorporated into 49 CFR part 572. No dummy specification in Part 572 contains 3-D patterns. This is because 3-D patterns are unnecessary in inspecting whether the dummy is acceptable for use in an agency test, and in some respects, would be overly design restrictive. The drawing package sets forth the criteria that the agency uses to determine acceptability of the dummy through an inspection process. The drawing package is not intended for use in manufacturing a dummy, or to ensure the interchangeability of parts between dummies manufactured by different business entities. Although the agency does not provide 3-D drawings, shape dimensions are provided in the form of surface widths, lengths, and circumferences. The drawing package specifies features that are important to establish the appropriate anthropometry and composition of the dummy. The test device is typically intended to be representative of a segment of an identified population, e.g., small adult females. Accordingly, the dimensions and mass of the dummy are specified to ensure that the dummy physically represents the population intended. The dimensions, mass distribution and range of motion of dummy parts are also specified to ensure that the kinematics of the test device in a crash test replicates that of the human occupant and to assure that the dummy's instrumentation performs as intended. The PADI document also provides procedures for a dummy's assembly and disassembly during inspection. The document insures that a dummy inspection is carried out using uniform disassembly procedures and in a proper sequence.

The performance specifications that are set forth in 49 CFR part 572 establish the impact response requirements for the dummy. To determine the acceptability of a dummy, the dummy is inspected for its conformance to the drawing package and is tested according to the qualification tests in part 572. The agency conducts impact tests for individual body segments and their assemblies, and on the dummy as a whole to determine acceptance. The impact qualification tests and associated instrumented measurements address the accuracy and consistency of dummy responses in crash events.

The two-dimensional drawings, PADI document and impact performance requirements enable the establishment of an objective, repeatable test device. Dummies reflecting the configuration of the parts and their assemblies contained in these drawings have been successfully used for the development and evaluation of occupant protection systems in a variety of simulated and full-scale crash tests. Use of the two-dimensional drawings limited to minimal but critical specifications affords dummy manufacturers an amount of flexibility to generate their own manufacturing and process drawings and to use whatever procedures are needed to facilitate production, which would be constrained if the drawings and other specifications were specified such as by use of 3-D patterns. Such restrictions in the design and production of the test dummy by government regulation is unnecessary, may impede technology development and manufacturing innovation, and may increase the costs of test dummies and crash tests. If manufacturers want more explicit design and manufacturing specifications and construction instructions to enable them to interchange parts among different test devices, the dummy manufacturers could work with or through technical societies and manufacturer associations to attain their desired objectives.

For the aforementioned reasons, the agency is not specifying three-dimensional (3-D) patterns for the dummy parts.[20]

[20] Although two-dimensional drawing specifications are sufficient for agency rulemaking purposes, we will explore the feasibility of developing three-dimensional scans for future research and development purposes. Furthermore, for a period of 180 days following publication of this final rule, we will have available for public inspection one of the SID–IIsD dummies used by the agency in the development of the rule. To make arrangements to inspect the dummy, contact Dr.

Continued

2. Material Specifications

DATD stated that the drawings lacked sufficient specification of materials necessary to manufacture a reproducible dummy. DATD recommended that NHTSA provide performance-based specifications for all materials. ''For materials, the drawing should call out the density with a tolerance, minimum tensile strength, and hardness with a tolerance. For materials that require a dynamic performance (such as rubbers, urethanes, foams), they should have basic performance-based specifications such as density with a tolerance, some stiffness specification with a tolerance, and a measure of the damping of the material with a tolerance.''

Agency Response: The agency does not have the resources to provide the detailed performance-based specifications recommended by DATD for all materials used in the dummy, nor do we believe it is necessary to provide such exhaustive specifications. We have added ''or equivalent'' to the drawing when particular plastic or rubber materials are specified. The drawing package can provide a starting point for material selection, but the non-metallic materials referenced in the drawings are not required to be used to exact specifications as long as the material that is used has functional, density and stiffness similarities enabling the dummy to meet the drawing package specifications and the dynamic performance requirements in the 49 CFR Part 572 qualification tests. The materials used by the dummy manufacturer do not have to be identical, but must be generically alike with similar properties to the materials listed on the individual component drawings.

3. Dummy Drawing Changes

Comments on the SID–IIsFRG drawing package were made by First Technology Safety Systems (FTSS) and Denton ATD (DATD). While a number of comments related to the floating rib guide design, the majority of comments dealt with issues addressing design details of the base SID–IIs dummy which are common to both the SID–IIsFRG and SID–IIsD versions. FTSS comments (Docket entry 18865–25) consisted of 11 separate issues dealing mostly with the base dummy design. DATD (Docket entry 18865–32) identified by mark-ups 110 drawings that it felt were in need of specific changes.

The agency examined the dummy manufacturers' comments in great detail by performing a review of the specifications within the drawings and additional laboratory inspection of parts as needed.

As a result of this review, the agency developed a table, ''September 15, 2006: SID–IIsD Drawing Changes Since SID–IIs NPRM Docketed in December 2004,'' in which all changes made to the drawings since publication of the NPRM are summarized (the table has been placed in Docket 25442). While changes to the drawing package relating to the removal of floating rib guides are self-evident, most other drawing changes deal with relatively minor adjustments, such as: Eliminating dimensioning inconsistencies, filling in missing specifications, adjusting some dimensional tolerances, clarifying material callouts, and correcting misplaced dimensions and typographical errors.

The table has been structured to identify the changes by part number, drawing title, description of the change, initiating source and reason for the change, change letter, and date of revision. Furthermore, the reason for the change has been coded for the following categories:

1. Identical cross reference drawings—drawings identical to Subpart O, Hybrid III 5th percentile female parts;
2. ''Same as except for'' cross reference drawings—drawings identical to Subpart O; Hybrid III 5th percentile female parts with minor revisions;
3. Changes made with regard to Denton docket comments;
4. Changes made with regard to FTSS docket comments;
5. Changes made due to corrections/clarifications found as a result of internal review;
6. Changes due to change from FRG design;
7. Changes due to OSRP recommendations; and,
8. Changes due to design revisions based upon agency test results.

Of the 170 drawings involving revisions, 34 are associated with changes from FRG to SID–IIsD. While most other drawing changes are minor, the more substantive changes include revisions suggested by OSRP to improve the basic SID–IIsC dummy, and consequently the SID–IIsD, without affecting the dummy's performance. They involve:

- Use ½-inch linear potentiometers instead of ⅜-inch potentiometers and modifications of their attaching mounts to allow the potentiometer for more angular motion;
- Modified thorax and abdominal rib stops to allow further motion of the ribs at oblique impact angles; and
- Modified thorax and abdominal rib stop attachment brackets to accommodate 60 mm of rib deflection.

The drawings encompass also a number of modifications developed by FTSS for the FRG dummy and adopted for the SID–IIsC and D versions of the dummy, including:

- Shoulder rib revision to include thinner, taller damping material to improve durability and associated modification of the front guide to improve rib control and eliminate gouging;
- Inclusion of a shoulder rib bumper; and
- Revision of the neck bracket to accommodate the modified shoulder rib guides.

IV. Qualification Procedures and Response Corridors

a. Qualification Procedures

The NPRM proposed qualification tests composed of impact tests of the head and neck, thorax with and without arm, abdomen, and pelvis (acetabulum). As discussed above in this preamble, commenters Autoliv and the Alliance recommended including a separate shoulder qualification test. Further, the Alliance raised a concern about the acetabulum test not fully exercising the iliac load cell.

Agency Response: We agree with the commenters that the shoulder with arm test has merit. We also agree that the pelvis qualification test should include a pendulum test of the iliac. Both tests have been included in the procedures. In general, the qualification procedures for the SID–IIsD are the same as those proposed in the NPRM for the SID–IIsFRG, except for the addition of separate shoulder and iliac qualification test requirements. The qualification tests include impact tests of the head and neck, shoulder, thorax with and without arm, abdomen, and pelvis (acetabulum and iliac).

The performance qualification tests in this final rule serve to assure that the SID–IIsD is within the established performance response corridors and further assure the uniformity of dummy assembly, structural integrity, consistency of impact response under identical loading conditions, and adequacy of instrumentation. The tests ensure the reliability of the dummy's impact response in vehicle compliance tests. They are generally conducted at energy levels that are just short of or at the threshold levels that result in dummy readings corresponding to

Bruce Donnelly at NHTSA's Vehicle Research and Test Center, P.O. Box B37, East Liberty, Ohio 43319, or by telephone at 1–800–262–8309.

IARVs associated with moderate to serious injury.

The below listing provides an overview of test procedures that the SID–IIsD dummies need to conform to in order to qualify as Part 572 test devices. Performance criteria based on the results of these tests are provided in the next section b, infra.

Head Drop Test: Test procedure is the same as for SID–IIsFRG proposed in the NPRM. The disarticulated head is suspended 200 mm above a rigid flat surface, with the D-plane of the head at an angle of 35 degrees from vertical. After release, the head impacts the rigid flat surface on the lateral-superior aspect of the skull. Accelerations of the head center of gravity are measured in the 3 orthogonal axes.

Lateral Neck Bending Pendulum Test: Test procedure is the same as for SID–IIsFRG proposed in the NPRM. The headform-neck complex is attached at the base of the neck (C7–T1) to the bottom of a swinging arm pendulum such that the arc of swing of the pendulum is perpendicular to the mid-saggital plane of the head-neck. To initiate the test, the pendulum is rotated upward from the vertical hanging position and released. The pendulum swings downward under the influence of gravity until it reaches the vertical hanging position at an impact speed of 5.51–5.63 m/s. At that instant an attenuator begins to arrest its motion. The arresting force causes the head form to decelerate and bend the neck laterally relative to the pendulum. Measurements include the time and magnitude of rotation of the neck, and the forces and moments generated by the neck at the upper load cell.

Shoulder Impactor Test: This test procedure is similar to the thorax with arm impact procedure proposed in the NPRM. A 13.97 kg impactor with a 120.7 mm diameter face and 12.7 mm edge radius is accelerated to 4.4±0.1 m/s and directed laterally to impact the shoulder of the dummy. The dummy is seated on a rigid bench developed by the WorldSID design team [21] (hereinafter referred to as ''the certification bench''). Measurements include lateral deflection of the shoulder and the acceleration of T1 and the impactor.

Thorax with Arm Impactor Test: A 13.97 kg impactor with a 120.7 mm diameter face and 12.7 mm edge radius is accelerated to 6.7±0.1 m/s and directed laterally to impact the thorax of the dummy. The dummy is seated on a the certification bench. The arm in this test is down, positioned to the lowest detent, interposed between the ribs and the impactor. Longitudinal centerline of the probe is centered on the most lateral centerpoint of the middle rib within 2 mm. Measurements include the deflection of the shoulder and thorax ribs, accelerations of the spine at T1 and T12 and the impactor.

Thorax without Arm Impactor Test: A 13.97 kg impactor with a 120.7 mm diameter face and 12.7 mm edge radius is accelerated to 4.3±0.1 m/s and directed laterally into the thorax of the dummy. The dummy is seated on the certification bench. The arm in this test is removed to allow the impactor to contact the thorax directly so that the longitudinal centerline of the probe is centered on the centerline of the middle rib within 2 mm. Measurements include the deflection of the thorax ribs, and accelerations of the spine at T1 and T12 and of the impactor.

Abdominal Impactor Test: A 13.97 kg impactor with a 76.2 mm diameter face and 12.7 mm edge radius is accelerated to 4.4±0.1 m/s and directed laterally to impact the abdomen of the dummy with the longitudinal probe aligned to coincide with the centerpoint between the two abdominal ribs. The dummy, with arm removed, is seated on the certification bench. The dummy is positioned so that the longitudinal centerline of the impact probe is centered at time of impact on the lateral midpoint between the two abdominal ribs within ±2 mm. Measurements include the deflection of the abdominal ribs, accelerations of the spine at T12 and of the impactor.

Pelvis Acetabulum Impactor Test: A 13.97 kg impactor with a 120.7 mm diameter face and 12.7 mm edge radius is accelerated to 6.7±0.1 m/s and directed laterally and targeted to impact the longitudinal center of the pelvis plug of the dummy. The dummy, without the torso jacket installed, is seated on the certification bench. The dummy is positioned in the seat so that the longitudinal centerline of the impact probe at time of impact coincides with the longitudinal centerline of the pelvis plug, as installed within the acetabulum access hole in the pelvis flesh within ±2 mm. With the dummy's thoracic lateral plane set at ±1 deg. relative to the horizontal, the orientation of the impactor face is within ±1 degree of the vertical at the time of impact. Measurements include peak impactor and pelvis lateral accelerations and peak acetabulum force.

Iliac Impactor Test: A 13.97 kg impactor, with a 50.8 x 88.9 mm rigid, flat face and a depth of at least 76 mm at these dimensions, is accelerated to 4.3±0.1 m/s and directed laterally to impact the pelvis of an upright postured dummy seated with legs stretched out on a rigid flat horizontal surface. The dummy is positioned such that the longitudinal centerline of the impact probe coincides at the time of impact with the laterally oriented centerline of the iliac access hole in the iliac load cell within ±2 mm. With the dummy's thoracic lateral plane set at ±1 deg. relative to the horizontal, the orientation of the impactor is adjusted so that its 50.5 mm wide surface is horizontal within ±1 degree at the time of impact. Measurements include peak impactor and pelvis lateral accelerations and peak iliac force.

b. Response Corridors

To develop the qualification corridors set forth in today's final rule, NHTSA first conducted qualification tests on each major body segment of dummies 032 and 033, yielding an initial data base of at least five sets of impacts to each dummy. The upper torso was tested in two configurations: one with the arm down in which the arm was impacted by the probe at the second rib level; and one directly into ribcage with the arm removed. In addition, the agency also accumulated considerable amount of data from qualification tests of four dummies performed in conjunction with vehicle pole and MDB crash tests, extensive sled impacts, as well as special durability and biofidelity tests, for a total of nearly 400 component tests. The qualification data from the tests of the four dummies were obtained at two test laboratories.

The distribution of final qualification data used for corridor establishment from each of the four dummies per body segment are shown in Table 10. It should be noted that the number of qualification tests vary between body regions and between dummies. Inasmuch as the heads and necks are identical for all SID–IIs dummies, including the FRG version, and repeatability of these components was already established, we determined that there was no reason to subject these components to additional testing. In other instances, some dummies were used fewer times in vehicle tests. Also, the results of some tests had to be eliminated due to such circumstances as

[21] WorldSID is a next-generation 50th percentile male side impact dummy developed by industry representatives from the U.S., Europe and Japan (see Docket No. 2000–17252). The design team developed a WorldSID test bench for use in testing the dummy. The seat back angle and other features of the WS bench provide more stability in supporting the dummy than conventional test benches, which facilitates the evaluation of the dummy. NHTSA believes that the WorldSID bench will also make testing of the SID–IIsD more thorough and efficient, and so the agency will use that bench in its tests of the SID–IIsD.

incorrect impact speeds, transducer or data collection problems, etc. Additionally, as much as this data set included data from dummies used in crash tests, and as those dummies were not new, some judgment had to be used based on scatter plot dispersion as to which data points were outliers not fitting the general pattern of all other responses. Only two responses of nearly 400 were found to be significantly out of the range of all others, and were thus eliminated from consideration in setting the performance corridors. The final set of valid qualification data was obtained from a total of 394 component tests. Peak responses from each of the qualification tests, the complete list of qualification data, and a detailed discussion of data are provided in the Technical Report, ''Development of Certification Performance Specifications for the SID–IsD Crash Test Dummy,'' September 2006, NHTSA Office of Vehicle Safety Standards, Docket 25442 (hereinafter referred to as ''the Certification Performance Specifications Report'').

TABLE 10.—NUMBER OF QUALIFICATION TESTS PER BODY REGION

Body region/No. of tests	Dummy 20	Dummy 32	Dummy 33	Dummy 56	Total
Head	9	9	13	11	42
Neck	10	9	13	13	45
Shoulder	9	19	22	15	65
Thorax w/Arm	12	14	18	10	54
Thorax w/o Arm	9	14	18	10	51
Abdomen	10	14	17	9	50
Pelvis	10	14	18	10	52
Iliac	0	0	35	0	35
Total # Tests on Dummy	69	93	154	78	394

The combined data of all four dummies for a specific body segment were then subjected to a statistical analysis which included the calculation of the mean, the standard deviation and percent standard deviation from the mean. The construction of initial performance corridors was based on the following formulation:

- If the percent standard deviation was equal to or below 3%, the performance limits were set at ±3 standard deviations from the mean;
- If the percent standard deviation was above 3%, but not more than 5%, the performance limits were set at ±2 standard deviations from the mean;
- If the percent standard deviation was above 5%, the performance limits were set at ±10% from the mean.
- Upon derivation of initial upper and lower performance limits, any residual values beyond the first decimal in the lower part of the corridor were reduced to the next lowest first decimal value, and any residual beyond the first decimal in the upper part of the corridor was incremented to the next highest first decimal value.

The intent of the above formulation was to keep the initial performance corridors within 10% of the mean of the data, yet facilitate the ability to use narrower corridors where warranted by tightly grouped data.

Initial Response Ranges of the SID–IIsD Dummy in Qualification Tests

Based on the data compiled during the qualification tests in these test series and using the formulation cited above, the initial performance corridors for the SID–IIsD dummy were constructed for further consideration. They are shown in Table 11. The performance corridors developed by the agency using its own data and processing methods match relatively closely to the draft performance corridors developed by the OSRP for the Build Level SID–IIsC dummy, and to those submitted by FTSS in comments to the NPRM for the FRG dummy version, also shown in Table 11. Although control of the dummy maintenance is unknown for the OSRP testing, the results still were comparable to NHTSA's initial corridors. The reasonably well-matching responses between the two data sets indicate that improvements done to convert the SID–IIsC to SID–IIsD version did not significantly alter the dummy's performance, and substantiates the consistency and reliability of the dummy's design to reproduce similar responses. It also corroborates the corridors established and shows that they should be very representative of all dummies, regardless of qualification test lab. It should also be noted that this database is limited to dummies manufactured by FTSS, since at the time of the formulation of the data there were no other manufacturers producing this dummy.

TABLE 11.—COMPARISON OF NHTSA INITIAL CORRIDORS FOR THE SID–IIsD WITH THOSE SUGGESTED BY THE OSRP AND FTSS

Body region/performance range	Measurement parameter	NHTSA SID–IIsD (initial)	Draft OSRP*		OSRP***	FTSS**
			Option 1*	Option 2*	Final	
		Corridor	Corridor	Corridor	Corridor	Corridor
Head	Max Resultant Acceleration (g)	119.5–136.9	.....	.....	.....	115–135*
Neck	Max D–Plane Rotation (deg)	70.9–77.6	72–82	.....	.....	72–82*
	Max O–C Moment (N–m)	37.6–47.5	36–43	.....	.....	36–42*
Shoulder	Max Shoulder Deflection (mm)	30.1–36.8	30–36	29–36	29–36	.....
	Max Upper Spine Y Acceleration (g).	−17.2–(−19.1)	.....	.....	.....	.....
Thorax with Arm	Max Shoulder Deflection (mm)	31.7–38.8	35–40	33–42	32–40	29–41
	Max Upper Rib Deflection (mm)	25.5–31.3	27–33	26–33	24–32	24–34
	Max Middle Rib Deflection (mm)	30.0–34.9	32–38	31–39	31–39	28–35

TABLE 11.—COMPARISON OF NHTSA INITIAL CORRIDORS FOR THE SID–IIsD WITH THOSE SUGGESTED BY THE OSRP AND FTSS—Continued

Body region/performance range	Measurement parameter	NHTSA SID–IIsD (initial)	Draft OSRP*		OSRP***	FTSS**
			Option 1*	Option 2*	Final	
	Max Lower Rib Deflection (mm)	32.3–37.1	33–39	32–40	33–41	31–37
	Max Lower Spine Acceleration (g)	28.6–35.1	29–34	28–35	28–36	32–41
Thorax without Arm	Max Upper Rib Deflection (mm)	32.7–39.9	33–39	32–40	32–40	33–43
	Max Middle Rib Deflection (mm)	38.5–44.7	40–46	38–47	38–46	40–46
	Max Lower Rib Deflection (mm)	36.1–42.6	37–43	35–44	34–42	36–44
	Max Lower Spine Acceleration (g)	7.8–9.6	9–12	8.5–12.6	8–13	9–13
Abdomen	Max Upper Rib Deflection (mm)	38.7–47.0	40–46	39–48	40–48	37–47
	Max Lower Rib Deflection (mm)	38.2–46.8	38–44	37–46	38–46	36–46
	Max Lower Spine Acceleration (g)	11.3–13.9	10–12	8.8–13.2	9–13	11–16
Pelvis—Acetabulum	Max Pelvis Accleration (g)	41.3–50.1	47–54	45–56	46–56	.....
	Max Acetabulum Force (kN)	3.7–4.3	3.8–4.8	3.9–4.8	3.9–4.8	.....
Pelvis-Iliac	Max Pelvis Accleration (g)	26.6–32.6	.....	.....	.....	.....
	Max Iliac Force (kN)	3.7–4.5	.....	.....	.....	.....

*Based on BLC version of dummy (Docket 25442, OSRP Upgrade Task Group (UTG) Chairman note of August 24, 2005); **based on FTSS docket comments; ***based on BLD version (Docket 25442, OSRP UTG minutes of July 20, 2006).

Performance Specification Selection for the SID–IIsD Dummy

The agency evaluated the effect of the conversion of floating rib guides to fixed rib guides and other changes to the features of the dummy on the qualification performance corridors proposed in the NPRM and determined that the corridors should be adjusted. To arrive at the amount of adjustment needed, the agency pooled all of the available qualification data in its test records and performed a statistical analysis including the plotting of scattergrams for selection of potential upper and lower performance boundaries. Specific response data and statistical analysis for the combined dummy population can be found in the Certification Performance Specifications Report, *id.* These were subsequently compared to those made available in docket comments and those proposed in the NPRM, as well as the data provided by OSRP on SID–IIs Build Level C and D dummies. The final setting of performance corridors was to assure that the selected corridor limits reflected the entire set of response data generated by the agency, and that they also were in general agreement with the data made available through docket comments and by the OSRP SID–IIs dummy working group, who had the responsibility of developing performance criteria for the Alliance. (Minutes of the OSRP meeting containing suggested corridors have been submitted to the docket for today's final rule (Docket 25442).)

Table 12 provides the final performance specification selections for each body segment. The first column, under NHTSA SID–IIsD Statistics, is a listing of performance corridors based on NHTSA qualification tests of dummies ##020, 032, 033 and 056. Except for the head and neck, they include on the average just a little over 50 data points for each body segment. (Inasmuch as the heads and necks are the same as those tested under the FRG series, repeatability qualification tests for them were omitted. Accordingly, those tests are fewer in number.) Also, several impact tests were omitted from the statistics due to their higher or lower impact speeds than allowed by the limits.

The initial limits related to IARVs shown in the NHTSA SID–IIs Statistics column were then reviewed in the context of FTSS scatter plots for the head and neck and the OSRP drafted corridors for the thorax and abdomen. Except for the pelvis acetabulum and iliac response values which were developed without FTSS and OSRP data, this review and adjustment took into account and attempted to reconcile both the limits developed by OSRP and the response ranges developed by the agency, including some certification test control values not related to IARVs. Some of the IARV-related corridors were adjusted to take into account the larger base of submitted qualification data, but only to the extent that adjustments were within approximately ±10% of the mean of the agency's data. As indicated by Table 12, there was reasonably close correspondence between NHTSA SID–IIsD Statistics and the FTSS and OSRP ''Final'' suggested performance ranges,[22] and adjustments needed to arrive at final qualification performance specifications were relatively minor. The specifications listed in Table 12 constitute the performance requirements to which Part 572 SID–IIsD dummies must conform, as specified in today's final rule.

TABLE 12.—PERFORMANCE SPECIFICATIONS FOR THE SID–IIsD IN CERTIFICATION TESTS

Body region/performance range	Probe impact velocity	Response measurement	NHTS A SID–HsD statistics	NHTSA final rule performance specification
Head	.....	Max Resultant Acceleration (g)	119.5–136.9	115–137
Neck	.....	Max D–Plane Rotation (deg)	70.9–77.6	71–81
	.....	Max O–C Moment (N-m)	39.0–45.1	36–44
Shoulder	4.4 m/s	Peak impactor acceleration (g)	14.1–17.8	14–18
		Max Shoulder Deflection (mm)	30.1–36.8	30–37
		Max Upper Spine Y Acceleration (g)	17.2–19.1	17–19
Thorax with Arm	6.7 m/s	Peak impactor acceleration (g)	31.3–36.0	31–36

[22] Final corridors are in Table 11, *supra.*

TABLE 12.—PERFORMANCE SPECIFICATIONS FOR THE SID–IISD IN CERTIFICATION TESTS—Continued

Body region/performance range	Probe impact velocity	Response measurement	NHTS A SID–HsD statistics	NHTSA final rule performance specification
		Max Shoulder Deflection (mm)	31.7–38.8	31–40
		Max Upper Rib Deflection (mm)	25.5–31.3	26–32
		Max Middle Rib Deflection (mm)	30.0–34.9	30–36
		Max Lower Rib Deflection (mm)	32.3–37.1	32–38
		Max Upper Spine Y Acceleration (g)	34.9–42.4	34–43
		Max Lower Spine Acceleration (g)	28.6–35.1	28–35
Thorax without Arm	4.3 m/s	Peak impactor acceleration (g)	14.8–17.3	14–18
		Max Upper Rib Deflection (mm)	32.7–39.9	33–40
		Max Middle Rib Deflection (mm)	38.5–44.7	39–45
		Max Lower Rib Deflection (mm)	36.1–42.6	36–43
		Max Upper Spine Y Acceleration (g)	13.9–16.5	14–17
		Max Lower Spine Acceleration (g)	7.8–9.6	7–10
Abdomen	4.4 m/s	Peak impactor acceleration (g)	12.2–15.7	12–16
		Max Upper Rib Deflection (mm)	38.5–47.1	39–47
		Max Lower Rib Deflection (mm)	38.2–46.8	37–46
		Max Lower Spine Acceleration (g)	11.3–13.9	11–14
Pelvis—Acetabulum	6.7 m/s	Peak impactor acceleration (g)	38.5–46.9	38–47
		Max Pelvis Acceleration (g)	41.3–50.1	41–50
		Max Acetabulum Force (kN)	3.7–4.3	3.8–4.6
Pelvis—Iliac*	4.3 m/s	Peak impactor acceleration (g)	34.9–38.9	34–40
		Max Pelvis Acceleration (g)	26.5–32.5	27–33
		Max Iliac Force (kN)	3.7–4.5	3.7–4.5

*Based on "new" (softer-version 2) iliac wings.

V. Dummy Performance in Full-Scale Vehicle Crash Tests

The agency conducted a series of vehicle crash tests utilizing a broad variety of passenger vehicles. The test program method and results are discussed in detail in a technical report entitled, "NHTSA Fleet Testing for FMVSS 214 Upgrade, MY 2004–2005, January 2006," Docket 25442.

The objectives of the test program were to evaluate the dummy's responses in different loading conditions with respect to the injury assessment reference values (IARV) proposed in the May 17, 2004 NPRM on FMVSS No. 214, to assess the dummies' durability, and to investigate the crashworthiness characteristics of a broad range of fleet vehicles. The series consisted of ten vehicle-to-pole tests (according to the FMVSS No. 214 proposed upgrade) and eight moving deformable barrier (MDB) tests (see test matrix in Table 13, below). In the MDB tests, SID–IIsD dummies were seated in both the driver and rear passenger positions, resulting in 16 total MDB exposures with SID–IIsD dummies. The tests provided information on how the SID–IIsD dummies function in a variety of impact environments and the extent to which their response signatures are consistent with the crash event and free of disruptions and anomalies.

TABLE 13.—VEHICLE CRASH TEST MATRIX

Vehicles	Side airbag type	Vehicle class/weight	Oblique impact/SID–IIsD dummy		
			Pole 32 km/h	MDB 52 km/h	
			Driver	Driver	Rear Passenger
Toyota Corolla	Curtain + Torso	Light PC	X	X	X
VW Jetta	Curtain + Torso	Compact PC	X	X	X
Saturn Ion	Curtain	Compact PC	X	X	X
Honda Accord*	Curtain + Torso	Medium	X	X	X
Ford 500	Curtain + Torso	Heavy PC	X	X	X
Toyota Sienna*	Curtain + Torso	Mini Van	X		
Subaru Forester	Head + Torso Bag	Small SUV	X	X	X
Honda CRV	Curtain + Torso	Small SUV	X	X	X
Chevy Colorado (4x2 Ext. Cab).	Curtain	Small Pickup	X		
Ford Expedition	Curtain	Large SUV	X		
Suzuki Forenza	Combo	Small SUV		X	X

*2004 Vehicles.

Tables 14 and 15 provide summaries of IARV-based dummy responses that were recorded in pole and MDB crash tests, respectively. Although rib deflections were not proposed as IARVs in the FMVSS No. 214 NPRM, the tables also include thorax and abdomen rib deflection measurements because the deflections are potential indicators of injury potential to the occupant and also provide information on the paths and sequence of loading that the intruding

vehicle interior imparts to the occupant. In this test series, the measured data traces were reviewed and correlated with visual observations of dummy kinematics and interaction with vehicle interior or intruding exterior surfaces.

a. Oblique Vehicle-to-Pole Crash Tests

Test results for the 10 vehicles evaluated in the oblique pole test are presented in Table 14. In these tests, seven vehicles exceeded at least one or more IARVs of the FMVSS No. 214 NPRM. Two of the tested vehicles did not exceed any of the proposed IARV limits, but they had T12 accelerations and/or pelvic loads in excess of 80% of the IARVs. The Toyota Corolla test failed to record the pelvis force response because of electrical malfunction; all other IARV values for the vehicle were below the proposed thresholds.

TABLE 14.—SID–IIsD DRIVER RESPONSE IN POLE OBLIQUE CRASH TESTS

Vehicles	Driver Results				
	HIC 36	Lower spine (g)	Thorax defl. (mm)	Abdomen defl. (mm)	Pelvis force *** (N)
Proposed IARV	1,000	82	** 38	** 45	5,100
Toyota Corolla	418	69.6	47	49	[1]
VW Jetta	478	54.2	33.3	33.8	7876
Saturn Ion	5203	109.6	32	52	5755
Ford 500	7017	92.4	37	57	6542
Subaru Forester	160	54.6	31	45	4707
Honda CRV	531	67.9	26	36	4670
Chevy Colorado	896	135.3	31	59	9387
Ford Expedition	5661	95.6	35.3	53.3	8249
Honda Accord*	567	63.0	31	30	10848
Toyota Sienna *	2019	67	45.6	57.9	6956
Average	2295	82.9	34.9	47.3	7221.1

[1] No data.
* 2004 MY.
** Informal thresholds; all measured values have been rounded to the nearest full number.
*** Crush based pelvis plug and original (stiffer) iliac wing.

Overview of Driver Injury Assessment and Impact Mechanics in Pole Test

• Head

Four of the 10 vehicles tested with the SID–IIsD in the driver's seating position exceeded the HIC_{36} 1000 limit. These were the Saturn Ion, Ford Five Hundred, Toyota Sienna, and Ford Expedition.

In the Saturn Ion test, the pole partially penetrated the air curtain, exposing a hard spot beneath the air pocket/tether attachment interface where the front portion of the dummy's head made contact.

The Ford Five Hundred was equipped with a head curtain and a thorax bag, but review of the test film indicated that the Ford Five Hundred's sensor began to deploy the air curtain at approximately 70 ms. The dummy's head hit the pole at approximately 60 ms. In the Ford Expedition and the Toyota Sienna tests, air curtains deployed, but the dummies' heads hit the front edge of the curtain's front pocket. This allowed the heads to hit the pole, resulting in high HIC values.

In contrast, the same four vehicles produced relatively moderate HIC scores with the ES–2re 50th percentile adult male dummy in the oblique pole test. *Id.* The difference in results can be attributed in large part to seat fore-and-aft position differences between the dummies, as well as to the ES–2re's taller seated height.

• Lower Spine and Thorax/Abdomen

Lower spine acceleration magnitudes were generally consistent with the SID–IIsD thoracic and abdominal rib deflections. Seven of the 10 vehicle tests with the SID–IIsD produced rib deflection measurements exceeding 38 mm for thoracic ribs and/or 45 mm for abdominal ribs. In six of the seven vehicle tests, the lower spine (T12) acceleration values were also elevated (within 80 to 100 percent of 82 g). The six vehicles were the 2005 Toyota Corolla, 2005 Saturn Ion, 2005 Ford 500, 2004/05 Toyota Sienna, 2005 Chevy Colorado 4x2 extended cab, and the 2005 Ford Expedition. Likewise, the lower spine acceleration criterion identified elevated loading conditions in the test of the 2005 Honda CRV. In that test, the abdominal rib deflection and the lower spine acceleration were within 80 percent of the respective IARV limits.

• Pelvis Force

Seven of the 10 vehicles exceeded the proposed 5,100 N pelvis force injury criterion. (One of the tested vehicles (Toyota Corolla) lost the pelvis data due to electrical problems not related to the dummy.) During pole impact, the collapsing door structure usually impacts the dummy in the pelvis area at significant severity levels. Video analysis shows the dummy, upon initial contact with the vehicle structure, typically being pushed towards the vehicle's interior and, in some tests, being wedged between the center console and the collapsed door structure. The dummies in the Honda Accord and the VW Jetta tests exceeded only the pelvis IARV limits while having relatively low responses for the remaining IARVs. The data from the tests indicate that the small dummy is capable of identifying a major potentially injurious load path in pole tests that current occupant protection systems will need to address.

The above analysis was based on tests with SID–IIsD dummies used with the ''precrushed'' pelvis plug, and with the original (stiffer) iliac wing. The agency analyzed the vehicle crash test data and scaled down their iliac load component to reflect current ''softer'' iliac wing properties. The analysis estimated that softer iliac wings would lower the average driver occupant's pelvis force between 7% and 8%. In only one case of the 9 dummy occupants' responses reviewed would the pelvis IARV revert from just being above the proposed IARV limit to just being below the proposed limit. (It is also noted that the agency is considering comments to the

FMVSS No. 214 NPRM that suggest revising the proposed IARV limit.)

b. MDB Tests

The test matrix included eight MDB tests. All eight vehicles in MDB crashes were the same model vehicles as in pole tests, except for the Chevy Colorado and Ford Expedition, which were not tested by the MDB. The SID–IIsD dummies were used in both the driver and rear passenger positions. Data from the tests are set forth in Table 15. The data show that dummies' impact responses in five out of eight crashed vehicles were all below the IARV limits for both the driver and rear occupant positions. Dummies in the three remaining vehicles exceeded the pelvis IARV. The data in the table also show that the average responses of any measurement were higher by rear passenger than driver dummies. The differences were most substantial in the HIC, thorax and abdominal deflections.

TABLE 15.—SID–IIsD DRIVER-REAR PASSENGER RESPONSE IN MDB CRASH TESTS

Vehicles	Driver HIC 36	Rear pass HIC 36	Driver lower spine (g)	Rear pass lower spine (g)	Driver pelvis force (N)***	Rear pass pelvis force (N)***	Rear thorax defl.** (mm)	Pass pass thorax defl.** (mm)	Driver abdomen defl. ** (mm)	Rear pass abdomen defl.** (mm)
Proposed IARV	1,000	1,000	82	82	5,100	5,100	**38	**38	**45	**45
Toyota Corolla	78	330	58.6	56.6	4655	3183	16.7	35.3	25.7	32.2
VW Jetta	46	103	30.4	52	2639	3026	12.2	48.8	18.2	43.1
Saturn Ion	189	220	53.2	73.1	8993	3964	19.1	46.7	39.3	51.7
Ford 500	46	216	30.6	42.4	2140	2925	15.8	45.1	25.2	45.6
Subaru Forester	43	150	37.1	43.1	3066	3572	11.4	24.2	11.2	25.9
Honda CRV	38	107	31.5	55.8	1350	3149	16.3	37.3	7.5	40
Honda Accord*	104	298	50.2	56.8	4150	6917	19.9	29.6	21.7	32.4
Suzuki Forenza	69	773	53	73.1	4948	6558	27	41.2	27.5	46.2
Average	77	275	43.1	56.6	3993	4162	17.3	38.5	22	39.6

* 2004 MY.
** Informal thresholds; all measured values have been rounded to the nearest full number.
*** Crush based pelvis plug and original iliac wing.

Overview of Injury Assessments and Impact Mechanics in MDB Tests

• Head

All driver and passenger dummies passed the HIC 1000 criterion. All of the vehicles were equipped with air curtains and front seat torso air bags, except the Suzuki Forenza, which had only an air curtain. The front seat torso air bag in the vehicles interfaced the dummy's torso high near the shoulder, which appeared to provide additional head protection to the smaller driver dummy.

• Lower Spine

All of the driver SID–IIsD dummies' lower spine T12 responses were well below the proposed IARV limit. The rear passenger dummies in six of eight vehicles tested were also below the proposed IARV value. The two exceptions, the Saturn Ion and the Suzuki Forenza, had rear passenger dummies measuring T12 responses within 80 percent of the proposed IARV.

• Pelvis

The Saturn Ion driver dummy pelvis response was well above the proposed pelvis IARV limit. In addition, pelvis responses for the driver dummies of the Suzuki Forenza and the Toyota Corolla were within 80% of the proposed pelvis IARV limit. The responses for the dummy in the rear passenger position in the Honda Accord and the Suzuki Forenza also exceeded the IARV threshold, but by a lesser margin than in the Ion test.

The above analysis is based on tests with SID–IIsD dummies used with the ''precrushed'' pelvis plug and the original (stiffer) iliac wing. The agency analyzed the vehicle crash test data and scaled down their iliac load component to reflect current ''softer'' iliac wing properties. The analysis estimated that softer iliac wings would lower the average driver occupant'' pelvis force between 7% and 8% and the passenger's just above 3%. In none of the 16 dummy occupants responses reviewed would the pelvis IARV revert from just being above the IARV limit to just being below the IARV limit.

• Thorax and Abdomen

All dummies in the driver position exhibited thorax and abdominal rib deflections below the informal IARV thresholds. The dummy in the Saturn Ion had an abdomen rib deflection (39 mm) within 80% of the 45 mm informal IARV. The measurement reflected the significant intrusion of the passenger compartment and jamming the dummy between the displaced seat and the intruding door structure.

Dummies in the rear passenger position in the VW Jetta, Saturn Ion, Suzuki Forenza, and Ford Five Hundred had thorax deflections exceeding the informal IARV limits. Abdominal rib deflections exceeded the informal IARV limit for rear-seated dummies in the Saturn Ion, Suzuki Forenza, and Ford Five Hundred. Rear passengers in the remaining vehicles, except for Subaru Forrester, did not exceed the limit but were within 80% of the thorax/abdomen informal IARV threshold values. The Subaru Forrester was the only vehicle in which all of the dummy's deflections were below 80% of the thorax and abdominal rib deflection thresholds.

The average thorax and abdominal rib deflections of the SID–IIsD dummies in the vehicle test program were nearly twice as high for rear passengers than for drivers.

c. Summary

The dummy responses in the MDB and pole crash tests showed that the SID–IIsD is well suited and equipped to assess the potential of injury to small stature occupants in the oblique pole

and MDB test environments. In the environments tested, the dummies' structure and the data acquisition systems retained their physical and response integrities, sometimes under very severe vehicle structural failures. The dummies did not produce data signals with indications of faults, disruptions, or distortions due to mechanical failures of the dummy.

The SID–IIs dummies demonstrated necessary sensitivity to differentiate not only between vehicles having different structural side impact crush properties, but also between the protection systems offered in driver and passenger seating locations. The driver dummy in general was showing lower intensity impact responses than the rear passenger dummy. The most apparent reason for lower loadings on the driver was the crush characteristics of the crash which produced greater intrusion and concentrated loading to the rear passenger seating location. Importantly, the SID–IIsD demonstrated an ability to assess quantitatively insufficient countermeasures, such as unprotected environments or improperly operating occupant protection systems, *e.g.*, late deployment timing.

VI. Conclusions

For the aforementioned reasons, NHTSA has decided to amend 49 CFR Part 572 by adding design and performance specifications for the SID–IIsD 5th percentile adult female side impact dummy. The agency concludes that the SID–IIsD dummy is a sound and useful test device that will provide valuable information for assessing the injury potential of small stature driver and rear seated passenger occupants in motor vehicle side crashes. The test dummy will allow the agency to assess the degree to which vehicle systems protect small stature occupants in side crashes, and will be a valuable tool in the agency's endeavors to increase the protection of smaller stature occupants in side impacts.

Rulemaking Analyses and Notices

Executive Order 12866 and DOT Regulatory Policies and Procedures

Executive Order 12866, ''Regulatory Planning and Review'' (58 FR 51735, October 4, 1993), provides for making determinations whether a regulatory action is ''significant'' and therefore subject to Office of Management and Budget (OMB) review and to the requirements of the Executive Order. This rulemaking action was not considered a significant regulatory action under Executive Order 12866. This rulemaking action was also determined not to be significant under the Department of Transportation's (DOT's) regulatory policies and procedures (44 FR 11034, February 26, 1979). The cost of an uninstrumented SID–IIsD is approximately $47,000. Instrumentation adds approximately $24,000 for minimum requirements. The total cost of a minimally-instrumented compliance dummy is approximately $71,000.

This document amends 49 CFR Part 572 by adding design and performance specifications for a 5th percentile adult female side impact dummy that the agency will use in research and in compliance tests of the Federal side impact protection safety standards. This 49 CFR Part 572 final rule does not impose any requirements on anyone. Businesses would be affected only if they choose to manufacture or test with the dummy. Because the economic impacts of this final rule are minimal, no further regulatory evaluation is necessary.

Regulatory Flexibility Act

Pursuant to the Regulatory Flexibility Act (5 U.S.C. 601 *et seq.*, as amended by the Small Business Regulatory Enforcement Fairness Act (SBREFA) of 1996), whenever an agency is required to publish a proposed or final rule, it must prepare and make available for public comment a regulatory flexibility analysis that describes the effect of the rule on small entities (*i.e.*, small businesses, small organizations, and small governmental jurisdictions), unless the head of the agency certifies the rule will not have a significant economic impact on a substantial number of small entities. The Small Business Administration's regulations at 13 CFR Part 121 define a small business, in part, as a business entity ''which operates primarily within the United States.'' (13 CFR 121.105(a)).

We have considered the effects of this rulemaking under the Regulatory Flexibility Act. I hereby certify that this rulemaking action will not have a significant economic impact on a substantial number of small entities. This action will not have a significant economic impact on a substantial number of small entities because the addition of the test dummy to Part 572 will not impose any requirements on anyone. This rule does not require anyone to manufacture the dummy or to test vehicles with it.

National Environmental Policy Act

NHTSA has analyzed this final rule for the purposes of the National Environmental Policy Act and determined that it will not have any significant impact on the quality of the human environment.

Executive Order 13132 (Federalism)

NHTSA has analyzed this amendment in accordance with the principles and criteria set forth in Executive Order 13132. The agency has determined that this final rule does not have sufficient federalism implications to warrant consultation and the preparation of a Federalism Assessment.

Civil Justice Reform

This final rule would not have any retroactive effect. 49 U.S.C. 30161 sets forth a procedure for judicial review of final rules establishing, amending, or revoking Federal motor vehicle safety standards. That section does not require submission of a petition for reconsideration or other administrative proceedings before parties may file suit in court.

Paperwork Reduction Act

Under the Paperwork Reduction Act of 1995, a person is not required to respond to a collection of information by a Federal agency unless the collection displays a valid control number from the Office of Management and Budget (OMB). This final rule does not have any requirements that are considered to be information collection requirements as defined by the OMB in 5 CFR Part 1320.

National Technology Transfer and Advancement Act

Section 12(d) of the National Technology Transfer and Advancement Act of 1995 (NTTAA), Public Law 104–113, section 12(d) (15 U.S.C. 272) directs NHTSA to use voluntary consensus standards in its regulatory activities unless doing so would be inconsistent with applicable law or otherwise impractical. Voluntary consensus standards are technical standards (*e.g.*, materials specifications, test methods, sampling procedures, and business practices) that are developed or adopted by voluntary consensus standards bodies, such as the Society of Automotive Engineers (SAE). The NTTAA directs us to provide Congress, through OMB, explanations when we decide not to use available and applicable voluntary consensus standards.

The following voluntary consensus standards have been used in developing the SID–IIsD dummy:

- SAE Recommended Practice J211, Rev. Mar95 ''Instrumentation for Impact Tests''; and
- SAE J1733 of 1994–12 ''Sign Convention for Vehicle Crash Testing''.

There were no relevant voluntary consensus standards that were not used in the formulation of this final rule.

Unfunded Mandates Reform Act

Section 202 of the Unfunded Mandates Reform Act of 1995 (UMRA), Pub. L. 104–4, Federal requires agencies to prepare a written assessment of the costs, benefits, and other effects of proposed or final rules that include a Federal mandate likely to result in the expenditure by State, local, or tribal governments, in the aggregate, or by the private sector, of more than $100 million annually (adjusted for inflation with base year of 1995). Before promulgating a NHTSA rule for which a written statement is needed, section 205 of the UMRA generally requires the agency to identify and consider a reasonable number of regulatory alternatives and adopt the least costly, most cost-effective, or least burdensome alternative that achieves the objectives of the rule.

This final rule will not impose any unfunded mandates under the UMRA. This rule does not meet the definition of a Federal mandate because it does not impose requirements on anyone. It amends 49 CFR Part 572 by adding design and performance specifications for a side impact dummy that the agency will use to evaluate manufacturers' compliance with applicable Federal safety standards and for research purposes. This rule affects only those businesses that choose to manufacture or test with the dummy. It does not result in costs of $100 million or more to either State, local, or tribal governments, in the aggregate, or to the private sector.

Regulation Identifier Number

The Department of Transportation assigns a regulation identifier number (RIN) to each regulatory action listed in the Unified Agenda of Federal Regulations. The Regulatory Information Service Center publishes the Unified Agenda in April and October of each year. You may use the RIN contained in the heading at the beginning of this document to find this action in the Unified Agenda.

Appendix A to Preamble: Durability and Overload Analysis of the SID–IIsD Test Dummy

Table of Contents

I. Introduction
II. Durability Analysis
a. NHTSA Durability Assessment Analysis
1. Dummy Durability in Qualification Test Exposures
2. Dummy Durability in Sled Tests
3. Dummy Durability in Vehicle Crash Tests
4a. Dummy Durability in Overload Sled Tests
4b. Overload of Thorax and Abdomen Responses in Pendulum Tests
b. Comparison of SID–IIsD With SID–IIsC Reported by Alliance
III. Summary of Appendix A

I. Introduction

Durability of a crash test dummy is an important consideration in determining its suitability for adoption into Part 572 for use as a test device in FMVSS compliance and New Car Assessment Program (NCAP) consumer information programs. In FMVSS compliance testing, test dummies are exposed to a wide range of crash conditions, ranging from vehicles with highly advanced crashworthiness technologies to vehicles that lack either sufficient structural integrity and/or occupant protection provisions to mitigate crash forces adequately. A crash test dummy must be durable to maintain structural and data acquisition integrities sufficiently when used for testing throughout this range of crash conditions.

II. Durability Analysis

The agency analyzed the durability of the SID–IIsD to assess whether the dummy will be durable enough to be used in FMVSS No. 214 as a compliance test instrument, and potentially as a test device in NHTSA's NCAP Program. The durability assessment was based on—

(a) the results of our tests of four SID–IIsD dummies that were exposed to a total of:

- over 400 qualification-type impacts;
- 30 sled tests;
- 11 full scale vehicle to pole crash tests and 20 MDB full scale crash tests; and
- sled and pendulum tests at elevated impact speeds (elevated to assess durability and biofidelity); and

(b) the data OSRP supplied on the durability of the predecessor SID–IIsC dummy.

The dummy's structural robustness as assessed in the items under section (a) above is discussed in a technical report entitled, ''Certification and Maintenance Records of the SID–IIs Build Level D Dummies used in NHTSA Rulemaking Support Tests'' (Docket 25422). Table A1, below, provides information on the number and the types of impacts to which each of the four dummies was exposed in agency testing.

TABLE A1.—NUMBER OF SID–IISD DUMMY EXPOSURES FOR ASSESSMENT OF DURABILITY IN A VARIETY OF IMPACT ENVIRONMENTS

Type of impact/dummy		#032	#033	#020	#056	Comments
No. of pendulum type qualification impact tests (6 segment tests per procedure—does not include head and neck tests or faulty tests).	Impactor Probe	75	128	50	54	Dummies #032 & #033 were refurbished after 10 pole tests. #20 was refurbished after completion of MDB tests. No structural failures prior to refurbishments.
Sled tests R&R	Flat Wall	5	5			
	Abdomen Offset	5	5	5	5	
Pole tests at 32 km	Driver	2	3	3	3	
MDB tests at 53 km/h	Driver	1	1	3	3	
	Passenger	1	1	3	3	
MDB test at NCAP speed	Driver	1		1		
	Passenger		1		1	
Sled tests durability	Various		8			
Specialty tests (biofidelity, overload)	Impactor Probe		5			
Total Dummy Impact Exposures		90	157	60	69	

a. NHTSA Durability Assessment Analysis

1. Dummy Durability in Qualification Test Exposures

Insight into the dummies' durability was gained in qualification level tests when two dummies were tested for repeatability at the subsystem-component levels, and when the dummies were demonstrated to pass these Part 572 tests prior to sled and vehicle crash tests. Prior to this agency assessment series, dummies 032 and 033 had been subjected to a considerable number of crash tests. For this reason, since the dummies were already subjected to wear, the durability assessment based on qualification-type tests reflects a conservative estimate of the dummy's capability to withstand exposures in various types of impact environments.

In the Build Level D test series, as shown in Table A2 below, individual body segments of dummies 032 and 033 were subjected each from 9 to 35 qualification test impacts, for a total of 93 and 154 impacts, respectively. Prior to their scheduled repeatability test series, both dummies were retrofitted with new ribs, potentiometers, and pelvis flesh. The evaluation for repeatability consisted of a series of five consecutive qualification tests to each dummy's shoulder, thorax, abdomen and pelvis (acetabulum and ilium).

TABLE A2.—NUMBER OF QUALIFICATION TESTS PER BODY REGION

Body region/No. of tests	Dummy 20	Dummy 32	Dummy 33	Dummy 56	Total
Head	9	9	13	11	42
Neck	10	9	13	13	45
Shoulder	9	19	22	15	65
Thorax w/Arm	12	14	18	10	54
Thorax w/o Arm	9	14	18	10	51
Abdomen	10	14	17	9	50
Pelvis	10	14	18	10	52
Iliac	0	0	35	0	35
Total # Tests on Dummy	69	93	154	78	394

Similarly, individual body segments of dummies 020 and 056 were subjected to about 9 to 15 qualification test impacts each during the test program.

None of the dummies experienced any structural or instrumentation failures, except for noted structural degradation of the left iliac wings. In the subsequently adjusted qualification test loadings, the right iliac wings have not shown any evidence of structural degradation. Further details may be found in ''SID–IIs Iliac Certification Development,'' *supra,* Docket 25422.

2. Dummy Durability in Sled Tests

Sled tests were performed at the Medical College of Wisconsin by permitting the seated dummy to slide laterally at 6.0 m/s and impact a flat rigid wall with and without armrest. Dummies 032 and 033 were exposed at MCW for a total of 10 sled tests each. The first five tests were lateral impacts into a flat wall rigid barrier configuration, and the subsequent five tests were into a flat barrier configuration with a protruding armrest simulation attached to it. In two armrest-equipped barrier tests, dummy 032 experienced clearly visible shoulder clipping as evidenced by the dummy being momentarily hung-up on the top edge of the barrier rigid load wall plate. In three other tests of dummy 032, as well as with dummy 033, the shoulder hang-up was still in evidence but to a lesser time duration as less distinct indications of clipping. Importantly for this durability analysis, despite the clipping, none of the dummies experienced structural or functional damage.

It was also observed that at the time of clipping the shoulder deflection trace near peak compression went from a smooth to a distorted pattern and continued with some distortion during the unloading portion of the deflection time trace. While the clipping effects had nothing to do with the dummy's performance as a measuring test device, the agency was not certain how they might have affected all other sensor responses. Because the suspect data could not be used for decision-making, the agency decided to repeat the abdominal test offset test series at TRC with dummies 020 and 056 on the HYGE sled with the upper edge of the barrier raised sufficiently high to preclude shoulder clipping. In these tests, the dummies experienced neither shoulder clipping nor any other structural or functional problems. Further details on these sled tests may be found in ''Repeatability, Reproducibility and Durability Evaluation of the SID–IIs Build Level D Dummy in the Sled Test Environment,'' *supra*, Docket 25422 (hereinafter, ''the MCW report'').

3. Dummy Durability in Vehicle Crash Tests

Full scale crash testing in the proposed FMVSS No. 214 pole test configuration was a crucial phase of the dummy's durability assessment. Except to the extent discussed below regarding the Saturn Ion test, the SID–IIs dummies experienced no structural or functional problems, and even in the Ion test the damage was incidental.

As indicated in Table A1, dummy 032 was used in two pole and two MDB crash tests, and dummy 033 in three pole and two MDB crash tests. In addition, each dummy was also used in an NCAP MDB crash at 62 km/h. In the pole crash test of the Saturn Ion, the driver dummy became jammed between the crushed door, the displaced and rotated seat, and the steering wheel. The vehicle structure had to be cut to extract the dummy from the driver compartment. Inspection of the dummy showed the abdominal ribs having been driven upwards and jammed into the interior aspects of the thoracic ribcage. As a result, both abdominal telescoping potentiometer rods were bent. In view of the very extensive vehicle intrusion and seat rotation into the lateral path of the dummy's motion, and the armrest driving the abdominal ribs upward into the thoracic ribcage in excess of the informal IARV limit by a considerable margin, the test facility judged that the extent of occupant compartment penetration was beyond any dummy's capability to withstand without structural damage. However, it must be noted that while the abdominal potentiometers were bent and needed replacement, they appeared to measure accurately beyond the informal IARV

limit. Both abdominal ribs sustained no permanent damage in the crash test. Upon release from the jammed position, the ribs snapped back into place and remained in use throughout all further vehicle tests.

Dummies 020 and 056 were each used in the vehicle test program in six MDB crashes alternating as drivers and rear passengers, and in three pole test crashes. In addition, dummies 020 and 056 were exposed as driver and passenger, respectively, in an NCAP MDB crash at a test speed of 62 km/h. In that severe test, the shoulder potentiometer of dummy 020 was found to be bent. Investigation as to the cause indicated that a set screw, controlling the rotational stiffness of the pivoting mechanism of the potentiometer body, was over-tightened and exceeded the torque specification callouts in the SID–IIsD User Manual. Subsequent MDB tests of that dummy with proper torque setting did not produce any further potentiometer failures.

4a. Dummy Durability in Overload Sled Tests

Eight special durability tests were conducted at MCW to determine the dummy's structural integrity and ability to acquire useful responses under overload impact conditions. Table A3 provides a matrix for these tests and the types of exposures to which the SID–IIs dummy (033) was subjected. Details on test set-up, dummy seating and positioning may be found in the MCW report, *id.*

TABLE A3.—SPECIAL DURABILITY AND BIOFIDELITY OVERLOAD SLED TESTS AT MCW

Test #	Test ref. No.	Wall configuration	Padding	Speed m/s	Arm position	Dummy	Damage
1	SD292	Flat Wall	Yes	6.7	Down	033	
2	SD294	Flat Wall	No	6.7	Down	033	
3	SD295	Pelvis Offset	Yes	6.7	Up	033	
4	SD296	Pelvis Offset	No	6.7	Up	033	
5	SD298	Thorax Offset	No	6.7	Up	033	
6	SD301	Flat Wall	Yes	8.9	Down	033	
7	SD302	Flat Wall	No	8.9	Down	033	Bent Pot.
8	SD303	Abdomen Offset	No	6.7	Up	033	

Durability tests were conducted at 8.9 m/s for tests SD301 and SD302 and at 6.7 m/s for tests SD292, SD294, SD295, SD296, SD298, and SD303. Test speed tolerance was maintained to ± 0.19 m/s. Some minor gouging of the shoulder damping material was observed at the location of the posterior rib guide in all of the tests. The first four tests were conducted using the original shoulder rib guide adapted from the FRG, which permitted some perceptible rib guide gouging. The last four tests used a modified FRG rib guide with rounded edges, which resulted in barely perceptible gouging (shallow and smooth scraping like indications). There was no damage to any of the displacement potentiometers, except for test 302 conducted at 8.9 m/s into a flat rigid wall, in which the shoulder rib contacted the rib stop. The potentiometer became slightly bent during this impact, but continued to measure the shoulder displacement accurately beyond the informal IARV limit without signal disruption. This was verified by re-qualifying the dummy and checking to see that the shoulder displacement was within the certification specifications.

Maximum thoracic rib displacement of 61 mm was measured in test SD298 (6.7 m/s rigid wall thoracic offset test) and maximum abdominal rib displacement of 60.1 mm occurred in test SD301 (6.7 m/s rigid wall abdominal offset test). The corresponding ribs contacted the rib stops, as indicated by the contact switches, but there was no flat-topping in the displacement-time trace.

In sum, the dummy demonstrated good durability in overload impact conditions.

4b. Overload of Thorax and Abdomen Responses in Pendulum Tests

To further assess the dummy's durability at elevated impact loads, two 5 m/s pendulum impacts were administered to the thorax and abdomen of dummy 020. In both tests, the dummy's arm was removed. The 5 m/s impact tests represent an impact energy higher by 35% than the 4.3 m/s standard qualification test. Tables A4 and A5 show thorax and abdomen rib deflection and upper and lower spine acceleration values measured in these tests. While, as expected, none of the spine acceleration values were near any of the IARV limits, both thorax and abdominal rib deflections were either at or above the injury limit.

TABLE A4.—SID–IIsD RESPONSES IN THORAX OVERLOAD 5 M/S IMPACTS

[Dummy's arm removed]

Probe loading and dummy response	Measurement	IARV
Pendulum Probe Acceleration (g)	18.2	.....
Upper Thorax Rib Deflection (mm)	43.4	38

TABLE A4.—SID–IIsD RESPONSES IN THORAX OVERLOAD 5 M/S IMPACTS—Continued

[Dummy's arm removed]

Probe loading and dummy response	Measurement	IARV
Middle Thorax Rib Deflection (mm)	50.3	38
Lower Thorax Rib Deflection (mm)	46.1	38
Upper Spine Y Acceleration (g)	17.8	n/a
Lower Spine Y Acceleration (g)	10.5	82

TABLE A5.—SID–IIsD RESPONSES IN ABDOMINAL OVERLOAD 5 M/S IMPACTS

[Dummy's arm removed]

Probe loading and dummy response	Measurement	IARV
Pendulum Probe Acceleration (g)	16.2	.....
Upper Abdominal Rib Deflection (mm)	48.3	45
Lower Abdominal Rib Deflection (mm)	45.6	45

TABLE A5.—SID–IIsD RESPONSES IN ABDOMINAL OVERLOAD 5 M/S IMPACTS—Continued

[Dummy's arm removed]

Probe loading and dummy response	Measurement	IARV
Upper Spine Y Acceleration (g)	8.7	n/a
Lower Spine Y Acceleration (g)	17.0	82

In addition, the agency conducted three biofidelity tests with dummy 020 to provide test response values for the calculation of the NHTSA based biofidelity ranking. The first shoulder impact test followed the procedure outlined in ''Shoulder Biofidelity Lateral Shoulder Pendulum Test,'' reported by Bolte et al. (John H. Bolte IV, et al., ''Shoulder Impact Response and Injury Due to Lateral and Oblique Loading,'' #2003–22033, Proceedings 47th Stapp Conference 2003.) The tests consisted of a dummy seated on the calibration bench and its shoulder impacted laterally at a speed of 4.3 m/s with an impactor that had a mass of 13.98 kg and a 20 cm wide by 15 cm high ram face, covered with a 5 cm thick piece of Arcel 730 foam. The impactor was centered on the shoulder/arm pivot with the arm down. The second and third shoulder impacts followed the procedure described in ISO 9790, section 4.1 for the shoulder and section 4.2 for the thorax. A 14 kg pendulum (150 mm diameter and rigid face) was used in these tests in lieu of the ISO specified 23 kg pendulum for the ES–2 dummy. The shoulder impact probe for the second test was centered on the shoulder/arm pivot with the arm down at a speed of 4.5 m/s, and for the third test the impactor was centered on the middle thorax rib with the dummy's arm set 90 degrees forward (horizontal) at a speed of 4.3 m/s.

Results from the biofidelity tests are summarized in Table A6. As expected, the Bolte test data indicate a lower level of dummy responses due to the impactor's face being covered by a 5 cm thick Arcel 730 foam. The ISO 9790 test data are similar in trends but of elevated responses from the results of the Bolte dummy shoulder tests. The dummy experienced neither structural nor functional damage in these tests.

TABLE A6.—SUMMARY OF IMPACT RESPONSES IN BIOFIDELITY IMPACT TESTS

Biofidelity Test Series	Bolte shoulder test*	ISO 9790 Sect. 4.1&2	
		Shoulder test 1	Thorax test 1
Pendulum Impact Speed (m/s)	4.3	4.5	4.3
Pendulum Probe Force (kN)	2.0	2.7	2.2
Shoulder Fx (N)	38.2	82.3	127.7
Shoulder Fy (N)	1002.9	1256.2	1208.4
Shoulder Fz (N)	223.8	236.9	809.6
Shoulder Rib X Acceleration (g)	15.9	31.9	24.3
Shoulder Rib Y Acceleration (g)	96.5	167.8	148.4
Shoulder Rib Z Acceleration (g)	54.2	79.1	149.7
Shoulder Rib Deflection (mm)	25.2	33.5	15.7
Upper Thorax Rib Deflection (mm)	11.2	16.9	14.6
Middle Thorax Rib Deflection (mm)	10.1	16.6	17.3
Lower Thorax Rib Deflection (mm)	6.3	13.7	20.1
Upper Thorax Rib X Acceleration (g)	12.9	15.4	14.8
Upper Thorax Rib Y Acceleration (g)	49.6	125.4	46.8
Middle Thorax Rib X Acceleration (g)	4.4	8.1	20.4
Middle Thorax Rib Y Acceleration (g)	47.3	67.19	98.9
Lower Thorax Rib X Acceleration (g)	6.8	10.1	19.7
Lower Thorax Rib Y Acceleration (g)	41.9	43.2	123.7
Upper Spine X Acceleration (g)	2.5	3.6	3.2
Upper Spine Y Acceleration (g)	17.2	22.6	22.8
Lower Spine X Acceleration (g)	1.6	2.9	3.4
Lower Spine Y Acceleration (g)	8.4	13.6	15.4

* Procedure in Stapp Conference Paper #2003–22033.

b. Comparison of SID–IIsD With SID–IIsC Reported by Alliance

In its docket comments (Docket 17694 and 18865), the Alliance included damage rates for the SID–IIsC dummy evaluated by its member companies. Table A7 provides a summary of these damage rates, as well as those the agency experienced with the SID–IIsD. The Alliance noted 7.8 dummy damages per 100 crash applications. The comparable damage rate for the SID–IIsD in agency testing is 5.8 per 100. Based on the six ribs and telescoping potentiometer units per dummy, the SID–IIsD had a damage rate of zero for ribs and 1.2 per 100 for the potentiometers. Comparable Alliance damage rates are 0.7 for the ribs and 0.4 for telescoping potentiometers. Inasmuch as the impact intensities of the Alliance reported dummy exposures are not known, it is difficult to establish direct comparability between Build Level C and Build Level D dummies. However, the agency observed failures rates for the Build Level D might be far lower, since damage was experienced by only one abdominal set of telescoping potentiometers associated with a vehicle crush deformation that is considerably in excess of the anticipated IARVs.

TABLE A7.—DAMAGE TO SID–IISD DUMMIES IN AGENCY AND OSRP REPORTED SID–IISC DUMMIES IN SLED AND VEHICLE CRASH TESTS

	Exposures			
	No. of SID–IIsDs in sled & vehicle tests*	No of ribs or potentiometers*	SID–IIsC**	No of ribs & related**
#Reported	69	414	283	1698
# With damage	4	5	22	31
% With damage	5.8	1.2	7.8	1.8
# Indications ribs leaving the guides	1	2	3	4
% Indications ribs leaving the guides	1.5	0.5	1.1	0.2
# With specific damage				
Damping material damaged	4	NA	NA	6
Damping material de-bonded	5.8	0	NA	6
Ribs bent	0	0	NA	12
% Ribs bent	0	0	NA	0.7
Potentiometer shaft bent	4	5	NA	NA
Potentiometer shaft broken	0	0	NA	6
% Potentiometers bent or broken	5.8	1.2	NA	0.4
Other			NA	3

* Agency tests based on 10 Pole tests; 8 MDB tests (2 dummies per test); 2 MDB tests at NCAP speed (2 dummies per test); 8 Bio/Durability sled tests; 20 R/R sled tests at MCW; 5 R/R sled tests at TRC (2 dummies per test).
** OSRP data.

III. Summary of Appendix A

The SID–IIsD dummy's durability was examined in at least four types of impact applications. The dummy was found to be extremely durable and capable of yielding measurements for occupant injury assessment over a wide range of impact conditions. While we do not have information at this time to estimate the service life for this dummy, the service life appears to be comparable or better than other crash dummies. We conclude that the SID–IIsD is well suited for use in research, FMVSS and NCAP test programs.

List of Subjects in 49 CFR Part 572

Incorporation by reference, Motor vehicle safety.

■ In consideration of the foregoing, NHTSA amends 49 CFR Part 572 as follows:

PART 572—ANTHROPOMORPHIC TEST DUMMIES

■ 1. The authority citation for Part 572 continues to read as follows:

Authority: 49 U.S.C. 322, 30111, 30115, 30117 and 30166; delegation of authority at 49 CFR 1.50.

■ 2. 49 CFR part 572 is amended by adding a new subpart V consisting of §§ 572.190 through 572.200 to read as follows:

Subpart V, SID–IIsD Side Impact Crash Test Dummy, Small Adult Female

Sec.
572.190 Incorporated materials.
572.191 General description.
572.192 Head assembly.
572.193 Neck assembly.
572.194 Shoulder.
572.195 Thorax with arm.
572.196 Thorax without arm.
572.197 Abdomen.
572.198 Pelvis acetabulum.
572.199 Pelvis iliac.
572.200 Instrumentation and test conditions.
Appendix A to Subpart V of Part 572—Figures

Subpart V, SID–IIsD Side Impact Crash Test Dummy, Small Adult Female

§ 572.190 Incorporated materials.

(a) The following materials are hereby incorporated into this Subpart by reference:

(1) A parts/drawing list entitled, ''Parts/Drawings List, Part 572 Subpart V, SID–IIsD, September 2006,''

(2) A drawings and inspection package entitled ''Drawings and Specifications for SID–IIsD Small Female Crash Test Dummy, Part 572 Subpart V, September 2006,'' consisting of:

(i) Drawing No. 180–0000, SID–IIsD Complete Assembly;

(ii) Drawing No. 180–1000, 6 Axis Head Assembly;

(iii) Drawing No. 180–2000, Neck Assembly;

(iv) Drawing No. 180–3000, Upper Torso Assembly;

(v) Drawing No. 180–3005, Washer, Clamping;

(vi) Drawing No. 9000021, Screw, SHCS ⅜–16 x 1 NYLOK;

(vii) Drawing No. 900005, Screw, SHCS ¼–20 x ⅝ NYLOK;

(viii) Drawing No. 180–4000, Lower Torso Assembly Complete;

(ix) Drawing No. 180–5000–1, Complete Leg Assembly, Left;

(x) Drawing No. 180–5000–2, Complete Leg Assembly, Right;

(xi) Drawing No. 180–6000–1, Arm Assembly Left Molded;

(xii) Drawing No. 180–6000–2, Arm Assembly Right Molded; and,

(xiii) Drawing No. 180–9000, SID–IIsD Headform Assembly.

(3) A procedures manual entitled, ''Procedures for Assembly, Disassembly, and Inspection (PADI) of the SID–IIsD Side Impact Crash Test Dummy, September 2006,'' incorporated by reference in § 572.191;

(4) SAE Recommended Practice J211, Rev. Mar 95 ''Instrumentation for Impact Tests—Part 1—Electronic Instrumentation''; and,

(5) SAE J1733 of 1994–12, ''Sign Convention for Vehicle Crash Testing.''

(b) The Director of the Federal Register approved the materials incorporated by reference in accordance with 5 U.S.C. 552(a) and 1 CFR part 51. Copies of the materials may be inspected at the National Archives and Records Administration (NARA), and in electronic format through the DOT docket management system (DMS). For information on the availability and inspection of this material at NARA, call 202–741–6030, or go to: *http://www.archives.gov/federal_register/code_of_federal_regulations/ibr_locations.html.* For information on the availability and inspection of this material at the DOT DMS, call 1–800–647–5527, or go to: *http://dms.dot.gov.*

(c) The incorporated materials are available as follows:

(1) The Parts/Drawings List, Part 572 Subpart V, SID–IIsD, September 2006, referred to in paragraph (a)(1) of this section, the package entitled Drawings and Specifications for SID–IIsD Small Female Crash Test Dummy, Part 572 Subpart V, September 2006, referred to in paragraph (a)(2) of this section, and the PADI document referred to in paragraph (a)(3) of this section, are available in electronic format through the DOT docket management system and in paper format from Leet-Melbrook, Division of New RT, 18810 Woodfield Road, Gaithersburg, MD 20879, telephone (301) 670–0090.

(2) The SAE materials referred to in paragraphs (a)(4) and (a)(5) of this section are available from the Society of Automotive Engineers, Inc., 400 Commonwealth Drive, Warrendale, PA 15096, telephone 1–877–606–7323.

§ 572.191 General description.

(a) The SID–IIsD Side Impact Crash Test Dummy, small adult female, is defined by:

(1) The drawings and specifications contained in the ''Drawings and Specifications for SID–IIsD Small Female Crash Test Dummy, Part 572 Subpart V, September 2006,'' which includes the technical drawings and specifications described in Drawing 180–0000, the titles of which are listed in Table A;

TABLE A

Component assembly	Drawing No.
6 Axis Head Assembly	180–1000
Neck Assembly	180–2000
Upper Torso Assembly	180–3000
Washer, Clamping	180–3005
Lower Torso Assembly Complete	180–4000
Complete Leg Assembly, Left	180–5000–1
Complete Leg Assembly, Right	180–5000–2
Arm Assembly Left Molded	180–6000–1
Arm Assembly Right Molded	180–6000–2

(2) The ''Parts/Drawing List, Part 572 Subpart V, SID–IIsD,'' dated September 2006 and containing 7 pages,

(3) A listing of available transducers-crash test sensors for the SID–IIsD Side Impact Crash Test Dummy, 5th percentile adult female, is shown in drawing 180–0000 sheet 2 of 5, dated September 2006,

(4) ''Procedures for Assembly, Disassembly, and Inspection (PADI) of the SID–IIsD Side Impact Crash Test Dummy, September 2006,'' and,

(5) Sign convention for signal outputs reference document SAE J1733 Information Report, titled ''Sign Convention for Vehicle Crash Testing,'' dated July 12, 1994, incorporated by reference in § 572.200(k).

(b) Exterior dimensions of the SID–IIsD Small Adult Female Side Impact Crash Test Dummy are shown in drawing 180–0000 sheet 3 of 5, dated September 2006.

(c) Weights and center of gravity locations of body segments are shown in drawing 180–0000 sheet 4 of 5, dated September 2006.

(d) Adjacent segments are joined in a manner such that, except for contacts existing under static conditions, there is no additional contact between metallic elements of adjacent body segments throughout the range of motion.

(e) The structural properties of the dummy are such that the dummy conforms to this Subpart in every respect before use in any test similar to that set forth in Standard 214, Side Impact Protection (49 CFR 571.214).

§ 572.192 Head assembly.

(a) The head assembly consists of the head (180–1000) and a set of three (3) accelerometers in conformance with specifications in 49 CFR 572.200(d) and mounted as shown in drawing 180–0000 sheet 2 of 5. When tested to the procedure specified in paragraph (b) of this section, the head assembly shall meet performance requirements specified in paragraph (c) of this section.

(b) *Test procedure.* The head shall be tested according to the procedure specified in 49 CFR 572.112(a).

(c) *Performance criteria.*

(1) When the head assembly is dropped from either the right or left lateral incline orientations in accordance with procedure in § 572.112(a), the measured peak resultant acceleration shall be between 115 g and 137 g;

(2) The resultant acceleration-time curve shall be unimodal to the extent that oscillations occurring after the main acceleration pulse shall not exceed 15% (zero to peak) of the main pulse;

(3) The longitudinal acceleration vector (anterior-posterior direction) shall not exceed 15 g.

§ 572.193 Neck assembly.

(a) The neck assembly consists of parts shown in drawing 180–2000. For purposes of this test, the neck assembly is mounted within the headform assembly (180–9000) as shown in Figure V1 in Appendix A to this subpart. When subjected to the test procedure specified in paragraph (b) of this section, the neck-headform assembly shall meet the performance requirements specified in paragraph (c) of this section.

(b) *Test procedure.*

(1) Soak the assembly in a test environment as specified in 49 CFR 572.200(j);

(2) Attach the neck-headform assembly, as shown in Figure V2–A or V2–B in Appendix A to this subpart, to the 49 CFR Part 572 pendulum test fixture (Figure 22, 49 CFR 572.33) in either the left or right lateral impact orientations, respectively, so that the midsagittal plane of the neck-headform assembly is vertical and at right angle (90 ± 1 degrees) to the plane of motion of the pendulum longitudinal centerline;

(3) Release the pendulum from a height sufficient to achieve a velocity of 5.57 ± 0.06 m/s measured at the center of the pendulum accelerometer, as shown in 49 CFR Part 572 Figure 15, at the instant the pendulum makes contact with the decelerating mechanism;

(4) The neck flexes without the neck-headform assembly making contact with any object;

(5) Time zero is defined as the time of initial contact between the pendulum mounted striker plate and the pendulum deceleration mechanism;

(6) Allow a period of at least thirty (30) minutes between successive tests on the same neck assembly.

(c) *Performance Criteria.*

(1) The pendulum deceleration pulse is characterized in terms of decrease in velocity as obtained by integrating the pendulum acceleration output from time zero:

Time (ms)	Pendulum Delta–V (m/s)
10.0	−2.20 to −2.80
15.0	−3.30 to −4.10
20.0	−4.40 to −5.40
25.0	−5.40 to −6.10
>25.0 < 100	−5.50 to −6.20

(2) The maximum translation-rotation of the midsagittal plane of the headform disk (180–9061 or 9062) in the lateral direction measured, with the rotation transducers specified in 49 CFR 572.200(e) shall be 71 to 81 degrees with respect to the longitudinal axis of the pendulum (see Figure V2–C in Appendix A to this subpart) occurring between 50 and 70 ms from time zero;

(3) Peak occipital condyle moment shall not be higher than −36 Nm and not lower than −44 Nm. The moment measured by the upper neck load cell (Mx) shall be adjusted by the following formula: Mx(oc) [1]= Mx+0.01778Fy;

[1] Mx(oc) is the moment at occipital condyle (Newton-meters) and Fy is the lateral shear force (Newtons) measured by the load cell.

(4) The decaying moment shall cross the 0 Nm line after peak moment between 102 ms-126 ms after time zero.

§ 572.194 Shoulder.

(a) The shoulder structure is part of the upper torso assembly shown in drawing 180–3000. For the shoulder impact test, the dummy is tested as a complete assembly (drawing 180–0000). The dummy is equipped with T1 laterally oriented accelerometer as specified in 49 CFR 572.200(d), and deflection potentiometer as specified in 180–3881 configured for shoulder and installed as shown in drawing 180–0000 sheet 2 of 5. When subjected to the test procedure as specified in paragraph (b) of this section, the shoulder shall meet the performance requirements of paragraph (c) of this section.

(b) *Test procedure.* (1) Soak the dummy assembly (180–0000) in a test environment as specified in 49 CFR 572.200(j).

(2) Seat the dummy, outfitted with the torso jacket (180–3450) and cotton underwear pants on a certification bench, specified in Figure V3 in Appendix A to this subpart, the seat pan and the seatback surfaces of which are covered with a 2 mm thick PTFE (Teflon) sheet;

(3) Align the outermost portion of the pelvis flesh of the impacted side of the seated dummy tangent to a vertical plane located within 10 mm of the side edge of the bench as shown in Figure V4–A in Appendix A to this subpart, while the midsagittal plane of the dummy is in vertical orientation.

(4) Push the dummy at the knees and at mid-sternum of the upper torso with just sufficient horizontally oriented force towards the seat back until the back of the upper torso is in contact with the seat back.

(5) While maintaining the dummy's position as specified in paragraphs (b)(3) and (4) of this section, the top of the shoulder rib mount (drawing 180–3352) orientation in the fore-and-aft direction is 24.6 ± 2.0 degrees relative to horizontal, as shown in Figure V4–B in Appendix A to this subpart.

(6) Adjust orientation of the legs such that they are symmetrical about the mid-sagittal plane, the thighs touch the seat pan, the inner part of the right and left legs at the knees are as close as possible to each other, the heels touch the designated foot support surface and the feet are vertical and as close together as possible.

(7) Orient the arm to point forward at 90 degrees relative to the interior-superior orientation of the upper torso spine box incline.

(8) The impactor is specified in 49 CFR 572.200(a).

(9) The impactor is guided, if needed, so that at contact with the dummy's arm rotation centerline (ref. item 23 in drawing 180–3000) the impactor's longitudinal axis is within ± 1 degree of a horizontal plane and perpendicular to the midsagittal plane of the dummy. The centerpoint of the impactor face at contact is within 2 mm of the shoulder yoke assembly rotation centerline (drawing 180–3327), as shown in Figure V4–A in Appendix A to this subpart.

(10) The dummy's arm-shoulder is impacted at 4.4±0.1 m/s with the impactor meeting the alignment and contact point requirements of paragraph (b)(9) of this section.

(c) *Performance criteria.*

(1) While the impactor is in contact with the dummy's arm, the shoulder shall compress not less than 30 mm and not more than 37 mm measured by the potentiometer specified in (a);

(2) Peak lateral acceleration of the upper spine (T1) shall not be less than 17 g and not more than 19 g;

(3) Peak impactor acceleration shall be not less than 14 g and not more than 18 g.

§ 572.195 Thorax with arm.

(a) The thorax is part of the upper torso assembly shown in drawing 180–3000. For the thorax with arm impact test, the dummy is tested as a complete assembly (drawing 180–0000). The dummy's thorax is equipped with T1 and T12 laterally oriented accelerometers as specified in 49 CFR 572.200(d), and deflection potentiometers for the thorax and shoulder as specified in 180–3881, installed as shown in drawing 180–0000 sheet 2 of 5. When subjected to the test procedure as specified in paragraph (b) of this section, the thorax shall meet performance requirements of paragraph (c) of this section.

(b) *Test procedure.* (1) Soak the dummy assembly (180–0000) in a test environment as specified in 49 CFR 572.200(j).

(2) Seat the dummy, outfitted with the torso jacket (180–3450) and cotton underwear pants on a certification bench, specified in Figure V3, the seat pan and the seatback surfaces of which are covered with a 2-mm-thick PTFE (Teflon) sheet.

(3) Align the outermost portion of the pelvis flesh of the impacted side of the seated dummy tangent to a vertical plane located within 10 mm of the side edge of the bench as shown in Figure V5–A, while the midsagittal plane of the dummy is in vertical orientation.

(4) Push the dummy at the knees and at mid-sternum of the upper torso with just sufficient horizontally oriented force towards the seat back until the back of the upper torso is in contact with the seat back.

(5) While maintaining the dummy's position as specified in paragraphs (b)(3) and (4) of this section, the top of the shoulder rib mount (drawing 180–3352) orientation in the fore-and-aft direction is 24.6 ± 2.0 degrees relative to horizontal as shown in Figure V5–B in Appendix A to this subpart.

(6) Adjust orientation of the legs such that they are symmetrical about the mid-sagittal plane, the thighs touch the seat pan, the inner part of the right and left legs at the knees are as close as possible to each other, the heels touch the designated foot support surface and the feet are vertical and as close together as possible.

(7) Orient the arm downward to the lowest detent.

(8) The impactor is specified in 49 CFR 572.200(a).

(9) The impactor is guided, if needed, so that at contact with the dummy's arm, its longitudinal axis is within ±1 degree of a horizontal plane and perpendicular to the midsagittal plane of the dummy. The centerpoint of the impactor face is within 2 mm of the vertical midpoint of the second thoracic rib and coincident with a line parallel to the seat back incline passing through the center of the shoulder yoke assembly arm rotation pivot (drawing 180–3327), as shown in Figure V5–A in Appendix A to this subpart.

(10) The dummy's arm is impacted at 6.7 ± 0.1 m/s.

(c) *Performance criteria.*

(1) While the impactor is in contact with the dummy's arm, the thoracic ribs and the shoulder shall conform to the following range of deflections:

(i) Shoulder not less than 31 mm and not more than 40 mm;

(ii) Upper thorax rib not less than 26 mm and not more than 32 mm;

(iii) Middle thorax rib not less than 30 mm and not more than 36 mm;

(iv) Lower thorax rib not less than 32 mm and not more than 38 mm;

(2) Peak lateral acceleration of the upper spine (T1) shall not be less than 34 g and not more than 43 g, and the lower spine (T12) not less than 28 g and not more than 35 g;

(3) Peak impactor acceleration shall be not less than 31 g and not more than 36 g.

§ 572.196 Thorax without arm.

(a) The thorax is part of the upper torso assembly shown in drawing 180–3000. For this thorax test, the dummy is

tested as a complete assembly (drawing 180–0000) with the arm (180–6000) on the impacted side removed. The dummy's thorax is equipped with T1 and T12 laterally oriented accelerometers as specified in 49 CFR 572.200(d) and with deflection potentiometers for the thorax as specified in drawing 180–3881, installed as shown in drawing 180–0000 sheet 2 of 5. When subjected to the test procedure specified in paragraph (b) of this section, the thorax shall meet the performance requirements set forth in paragraph (c) of this section.

(b) *Test procedure.* (1) Soak the dummy assembly (180–0000) in a test environment as specified in 49 CFR 572.200(j).

(2) Seat the dummy, outfitted with the torso jacket (180–3450) and cotton underwear pants on a calibration bench, specified in Figure V3 in Appendix A to this subpart, the seat pan and the seatback surfaces of which are covered with a 2-mm-thick PTFE (Teflon) sheet.

(3) Align the outermost portion of the pelvis flesh of the impacted side of the seated dummy tangent to a vertical plane located within 25 mm of the side edge of the bench as shown in Figure V4–A, while the midsagittal plane of the dummy is in vertical orientation.

(4) Push the dummy at the knees and at mid-sternum of the upper torso with just sufficient horizontally oriented force towards the seat back until the back of the upper torso is in contact with the seat back.

(5) While maintaining the dummy's position as specified in paragraphs (b)(3) and (4) of this section, the top of the shoulder rib mount (drawing 180–3352) orientation in the fore-and-aft direction is 24.6 ± 2.0 degrees relative to horizontal, as shown in Figure V6–B in Appendix A to this subpart.

(6) Adjust orientation of the legs such that they are symmetrical about the mid-sagittal plane, the thighs touch the seat pan, the inner part of the right and left legs at the knees are as close as possible to each other, the heels touch the designated foot support surface and the feet are vertical and as close together as possible.

(7) The impactor is specified in 49 CFR 572.200(a).

(8) The impactor is guided, if needed, so that at contact with the thorax, its longitudinal axis is within 1 degree of a horizontal plane and perpendicular to the midsagittal plane of the dummy. The centerpoint of the impactor face is within 2 mm of the vertical midpoint of the second thorax rib and coincident with a line parallel to the seat back incline passing through the center of the shoulder yoke assembly arm rotation pivot (drawing 180–3327), as shown in Figure V6–A in Appendix A to this subpart.

(9) The dummy's thorax is impacted at 4.3 ± 0.1 m/s.

(c) *Performance criteria.*

(1) While the impactor is in contact with the dummy's thorax, the ribs shall conform to the following range of deflections:

(i) Upper thorax rib not less than 33 mm and not more than 40 mm;

(ii) Middle thorax rib not less than 39 mm and not more than 45 mm;

(iii) Lower thorax rib not less than 36 mm and not more than 43 mm;

(2) Peak acceleration of the upper spine (T1) shall not be less than 14g and not more than 17 g and the lower spine (T12) not less than 7 g and not more than 10 g;

(3) Peak lateral impactor acceleration shall not be less than 14 g and not more than 18 g.

§ 572.197 Abdomen.

(a) The abdomen assembly is part of the upper torso assembly (180–3000) and is represented by two ribs (180–3368) and two linear deflection potentiometers (180–3881). The abdomen test is conducted on the complete dummy assembly (180–0000) with the arm (180–6000) on the impacted side removed. The dummy is equipped with a lower spine laterally oriented accelerometer as specified in 49 CFR 572.200(d) and deflection potentiometers specified in drawing 180–3881, installed as shown in sheet 2 of drawing 180–0000. When subjected to the test procedure as specified in paragraph (b) of this section, the abdomen shall meet performance requirements of paragraph (c) of this section.

(b) *Test procedure.* (1) Soak the dummy assembly (180–0000) in a test environment as specified in 49 CFR 572.200(j).

(2) Seat the dummy, outfitted with the torso jacket (180–3450) and cotton underwear pants on a calibration bench, specified in Figure V3, the seat pan and the seatback surfaces of which are covered with a 2 mm thick PTFE (Teflon) sheet.

(3) Align the outermost portion of the pelvis flesh of the impacted side of the seated dummy tangent to a vertical plane located within 25 mm of the side edge of the bench as shown in Figure V7–A in Appendix A to this subpart, while the midsagittal plane of the dummy is in vertical orientation.

(4) Push the dummy at the knees and at mid-sternum of the upper torso with just sufficient horizontally oriented force towards the seat back until the back of the upper torso is in contact with the seat back.

(5) While maintaining the dummy's position as specified in paragraph (b)(3) and (4) of this section, the top of the shoulder rib mount (drawing 180–3352) orientation in the fore-and-aft direction is 24.6 ± 2.0 degrees relative to horizontal, as shown in Figure V7–B in Appendix A to this subpart);

(6) Adjust orientation of the legs such that they are symmetrical about the mid-sagittal plane, the thighs touch the seat pan, the inner part of the right and left legs at the knees are as close as possible to each other, the heels touch the designated foot support surface and the feet are vertical and as close together as possible;

(7) The impactor is specified in 49 CFR 572.200(b);

(8) The impactor is guided, if needed, so that at contact with the abdomen, its longitudinal axis is within ± 1 degree of a horizontal plane and perpendicular to the midsagittal plane of the dummy and the centerpoint of the impactor's face is within 2 mm of the vertical midpoint between the two abdominal ribs and coincident with a line parallel to the seat back incline passing through the center of the shoulder yoke assembly arm rotation pivot (drawing 180–3327), as shown in Figure V7–A in Appendix A to this subpart;

(9) The dummy's abdomen is impacted at 4.4 ± 0.1 m/s.

(c) *Performance criteria.* (1) While the impact probe is in contact with the dummy's abdomen, the deflection of the upper abdominal rib shall be not less than 39 mm and not more than 47 mm, and the lower abdominal rib not less than 37 mm and not more than 46 mm.

(2) Peak acceleration of the lower spine (T12) laterally oriented accelerometer shall be not less than 11 g and not more than 14 g;

(3) Peak impactor acceleration shall be not less than 12 g and not more than 16 g.

§ 572.198 Pelvis acetabulum.

(a) The acetabulum is part of the lower torso assembly shown in drawing 180–4000. The acetabulum test is conducted by impacting the side of the lower torso of the assembled dummy (drawing 180–0000). The dummy is equipped with a laterally oriented pelvis accelerometer as specified in 49 CFR 572.200(d), acetabulum load cell SA572–S68, mounted as shown in sheet 2 of 5 of drawing 180–0000, and an unused and certified pelvis plug (180–4450). When subjected to the test procedure as specified in paragraph (b) of this section, the pelvis shall meet

performance requirements of paragraph (c) of this section.

(b) *Test procedure.* (1) Soak the dummy assembly (180–0000) in a test environment as specified in 49 CFR 572.200(j).

(2) Seat the dummy, without the torso jacket (180–3450) and without cotton underwear pants, as shown in Figure V8–A in Appendix A to this subpart, on a calibration bench, specified in Figure V3 in Appendix A to this subpart, with the seatpan and the seatback surfaces covered with a 2-mm-thick PTFE (Teflon) sheet;

(3) Align the outermost portion of the pelvis flesh of the impacted side of the seated dummy tangent to a vertical plane located within 10 mm of the side edge of the bench as shown in Figure V8–A in Appendix A to this subpart, while the midsagittal plane of the dummy is in vertical orientation.

(4) Push the dummy at the knees and at mid-sternum of the upper torso with just sufficient horizontally oriented force towards the seat back until the back of the upper torso is in contact with the seat back.

(5) While maintaining the dummy's position as specified in paragraphs (b)(3) and (4) of this section, the top of the shoulder rib mount (drawing 180–3352) orientation in the fore-and-aft direction is 24.6 ± 1.0 degrees relative to horizontal, as shown in Figure V8–B in Appendix A to this subpart;

(6) Adjust orientation of the legs such that they are symmetrical about the mid-sagittal plane, the thighs touch the seat pan, the inner part of the right and left legs at the knees are as close as possible to each other, the heels touch the designated foot support surface and the feet are vertical and as close together as possible.

(7) Rotate the arm downward to the lowest detent.

(8) The impactor is specified in 49 CFR 572.200(a).

(9) The impactor is guided, if needed, so that at contact with the pelvis, its longitudinal axis is within ±1 degree of a horizontal plane and perpendicular to the midsagittal plane of the dummy. The centerpoint of the impactor's face is in line within 2 mm of the longitudinal centerline of the ¼-20x½ flat head cap screw through the center of the acetabulum load cell (SA572–S68), as shown in Figure V8–A in Appendix A to this subpart;

(10) The dummy's pelvis is impacted at the acetabulum at 6.7 ± 0.1 m/s.

(c) *Performance criteria.* While the impactor is in contact with the pelvis:

(1) Peak acceleration of the impactor is not less than 38 g and not more than 47 g;

(2) Peak lateral acceleration of the pelvis is not less than 41 g and not more than 50 g;

(3) Peak acetabulum force is not less than 3.8 kN and not more than 4.6 kN.

§ 572.199 Pelvis iliac.

(a) The iliac is part of the lower torso assembly shown in drawing 180–4000. The iliac test is conducted by impacting the side of the lower torso of the assembled dummy (drawing 180–0000). The dummy is equipped with a laterally oriented pelvis accelerometer as specified in 49 CFR 572.200(d), and acetabulum load cell SA572–S68, mounted as shown in sheet 2 of 5 of drawing 180–0000. When subjected to the test procedure as specified in paragraph (b) of this section, the pelvis shall meet performance requirements of paragraph (c) of this section.

(b) *Test procedure.* (1) Soak the dummy assembly (180–0000) in a test environment as specified in 49 CFR 572.200(j).

(2) Seat the dummy, without the torso jacket and without cotton underwear pants, as shown in Figure V9–A in Appendix A to this subpart, on a flat, rigid, horizontal surface covered with a 2-mm-thick PTFE (Teflon) sheet.

(3) The legs are outstretched in front of the dummy such that they are symmetrical about the midsagittal plane, the thighs touch the seated surface, the inner part of the right and left legs at the knees are as close as possible to each other, and the feet are in full dorsiflexion and as close together as possible.

(4) The midsagittal plane of the dummy is vertical and superior surface of the lower half neck assembly load cell replacement (180–3815) in the lateral direction is within ±1 degree relative to the horizontal as shown in Figure V9–A.

(5) While maintaining the dummy s position as specified in paragraphs (b)(3) and (4) of this section, the top of the shoulder rib mount (180–3352) orientation in the fore-and-aft direction is within ±1.0 degrees relative to horizontal as shown in Figure V9–B in Appendix A to this subpart.

(6) The pelvis impactor is specified in 49 CFR 572.200(c).

(7) The dummy is positioned with respect to the impactor such that the longitudinal centerline of the impact probe is in line with the longitudinal centerline of the iliac load cell access hole and the 88.9 mm dimension of the probe's impact surface is aligned horizontally.

(8) The impactor is guided, if needed, so that at contact with the pelvis, the longitudinal axis of the impactor is within ±1 degree of a horizontal plane and perpendicular to the midsagittal plane of the dummy.

(9) The dummy s pelvis is impacted at the iliac location at 4.3 ± 0.1 m/s.

(c) *Performance criteria.* While the impactor is in contact with the pelvis:

(1) Peak lateral acceleration of the impactor is not less than 34 g and not more than 40 g;

(2) Peak lateral acceleration of the pelvis is not less than 27 g and not more than 33 g;

(3) Peak iliac force is not less than 3.7 kN and not more than 4.5 kN.

§ 572.200 Instrumentation and test conditions.

(a) The test probe for shoulder, lateral thorax, and pelvis-acetabulum impact tests is the same as that specified in 49 CFR 572.137(a) except that its impact face diameter is 120.70 ± 0.25 mm and it has a minimum mass moment of inertia of 3646 kg-cm^2.

(b) The test probe for the lateral abdomen impact test is the same as that specified in 572.137(a) except that its impact face diameter is 76.20 ± 0.25 mm and it has a minimum mass moment of inertia of 3646 kg-cm^2.

(c) The test probe for the pelvis-iliac impact tests is the same as that specified in 49 CFR 572.137(a) except that it has a rectangular flat impact surface 50.8 × 88.9 mm for a depth of at least 76 mm and a minimum mass moment of inertia of 5000 kg-cm^2.

(d) Accelerometers for the head, the thoracic spine, and the pelvis conform to specifications of SA572–S4.

(e) Rotary potentiometers for the neck-headform assembly conform to SA572–S51.

(f) Instrumentation and sensors conform to the Recommended Practice SAE J–211 (March 1995), Instrumentation for Impact Test, unless noted otherwise.

(g) All instrumented response signal measurements shall be treated to the following specifications:

(1) Head acceleration—digitally filtered CFC 1000;

(2) Neck-headform assembly translation-rotation—digitally filtered CFC 60;

(3) Neck pendulum, T1 and T12 thoracic spine and pelvis accelerations—digitally filtered CFC 180;

(4) Neck forces (for the purpose of occipital condyle calculation) and moments—digitally filtered at CFC 600;

(5) Pelvis, shoulder, thorax and abdomen impactor accelerations—digitally filtered CFC 180;

(6) Acetabulum and iliac wings forces—digitally filtered at CFC 600;

(7) Shoulder, thorax, and abdomen deflection—digitally filtered CFC 600.

(h) Mountings for the head, thoracic spine and pelvis accelerometers shall have no resonant frequency within a range of 3 times the frequency range of the applicable channel class;

(i) Leg joints of the test dummy are set at the force between 1 to 2 g, which just support the limb's weight when the limbs are extended horizontally forward. The force required to move a limb segment does not exceed 2 g throughout the range of the limb motion.

(j) Performance tests are conducted, unless specified otherwise, at any temperature from 20.6 to 22.2 degrees C. (69 to 72 degrees F.) and at any relative humidity from 10% to 70% after exposure of the dummy to those conditions for a period of 3 hours.

(k) Coordinate signs for instrumentation polarity shall conform to the Sign Convention For Vehicle Crash Testing, Surface Vehicle Information Report, SAE J1733, 1994–12 (refer to § 572.191(a)(5)).

Appendix A to Subpart V of Part 572—Figures

BILLING CODE 4910–59–P

FIGURE V1
NECK ATTACHED TO HEADFORM ASSEMBLY

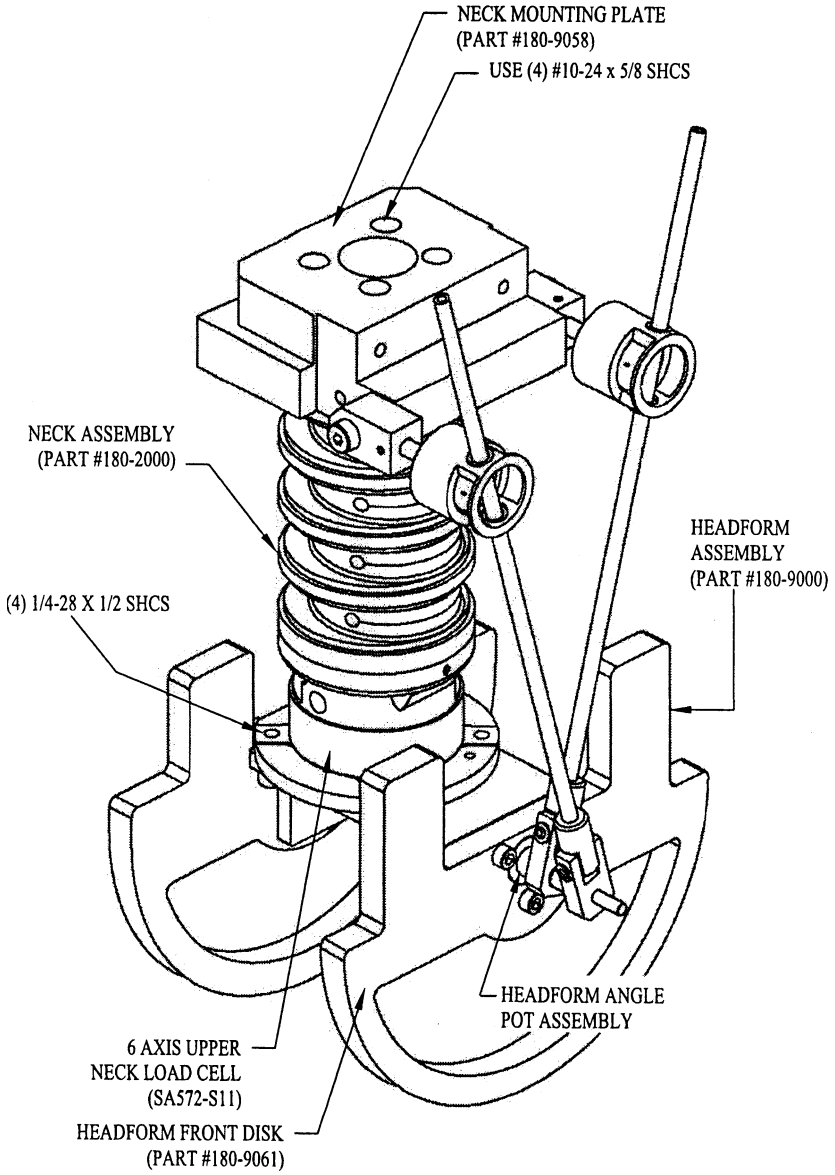

FIGURE V2-A
NECK/HEADFORM ATTACHED TO PENDULUM FOR LEFT-SIDE IMPACT

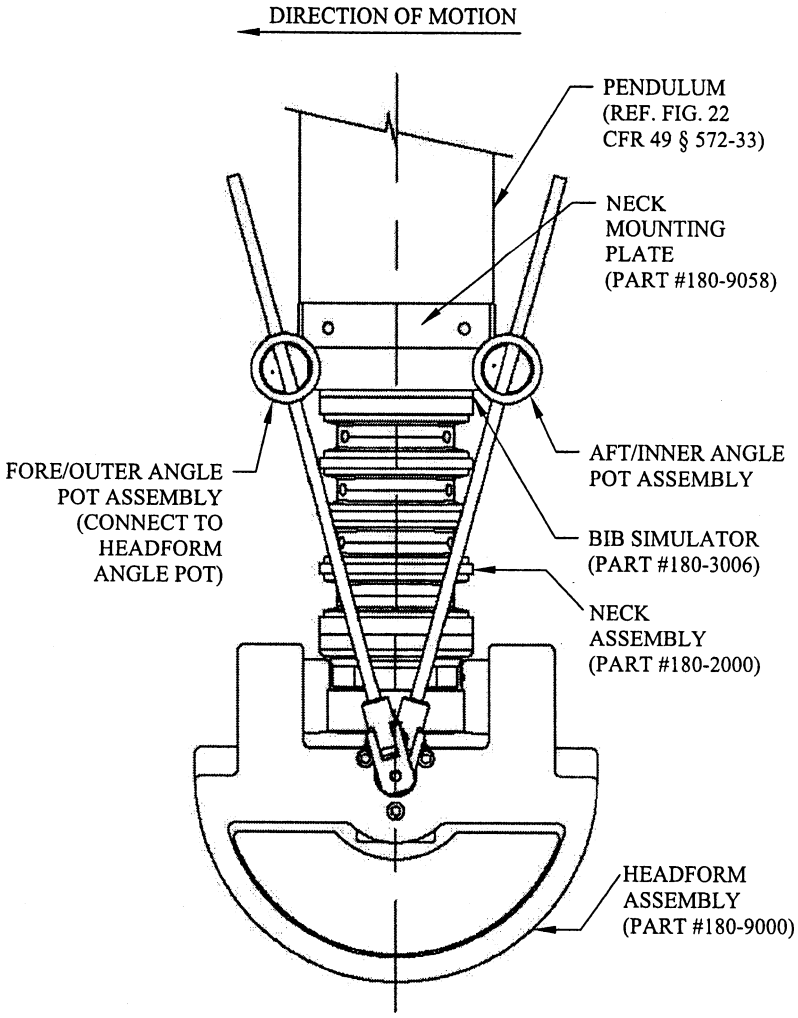

FIGURE V2-B
NECK/HEADFORM ATTACHED TO PENDULUM FOR RIGHT-SIDE IMPACT

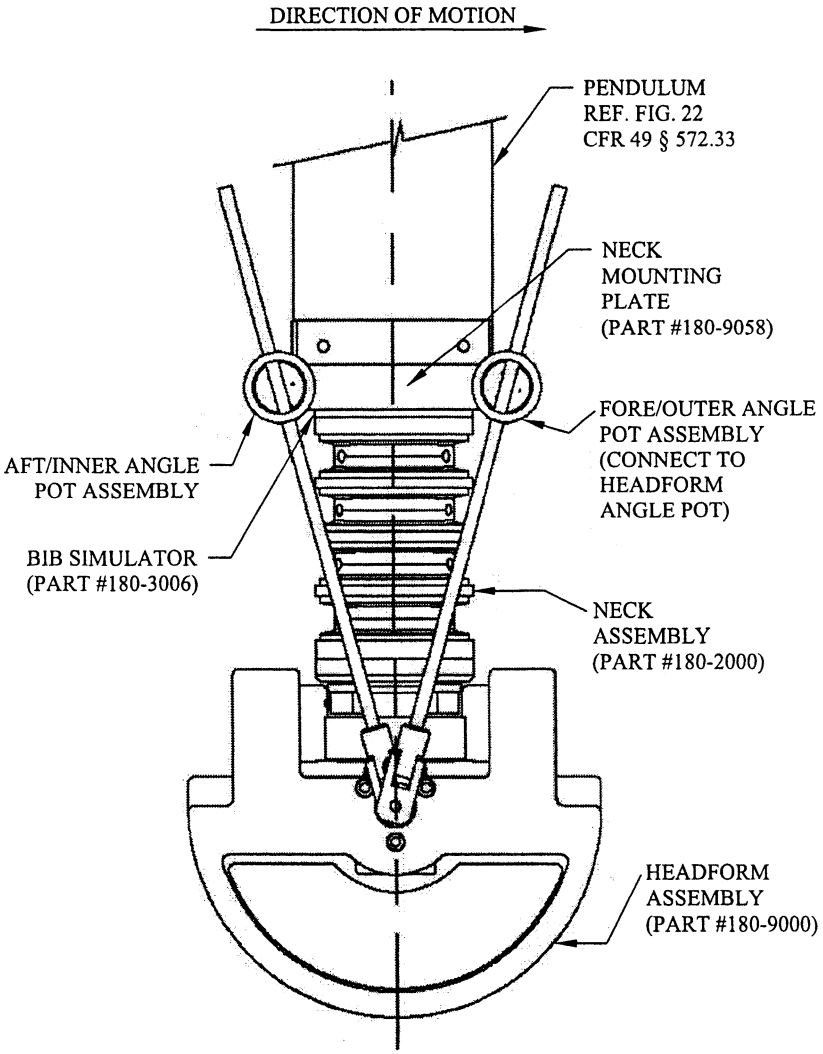

FIGURE V2-C
ANGLE MEASUREMENT WITH HEADFORM SET-UP

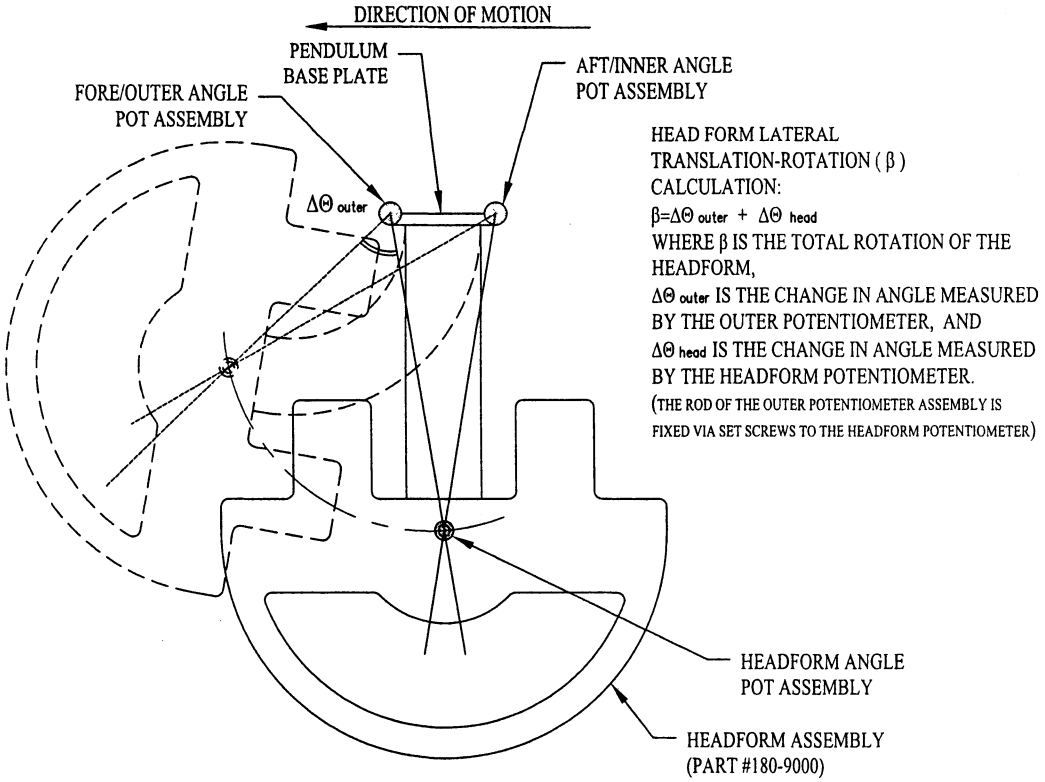

FIGURE V3
CERTIFICATION BENCH

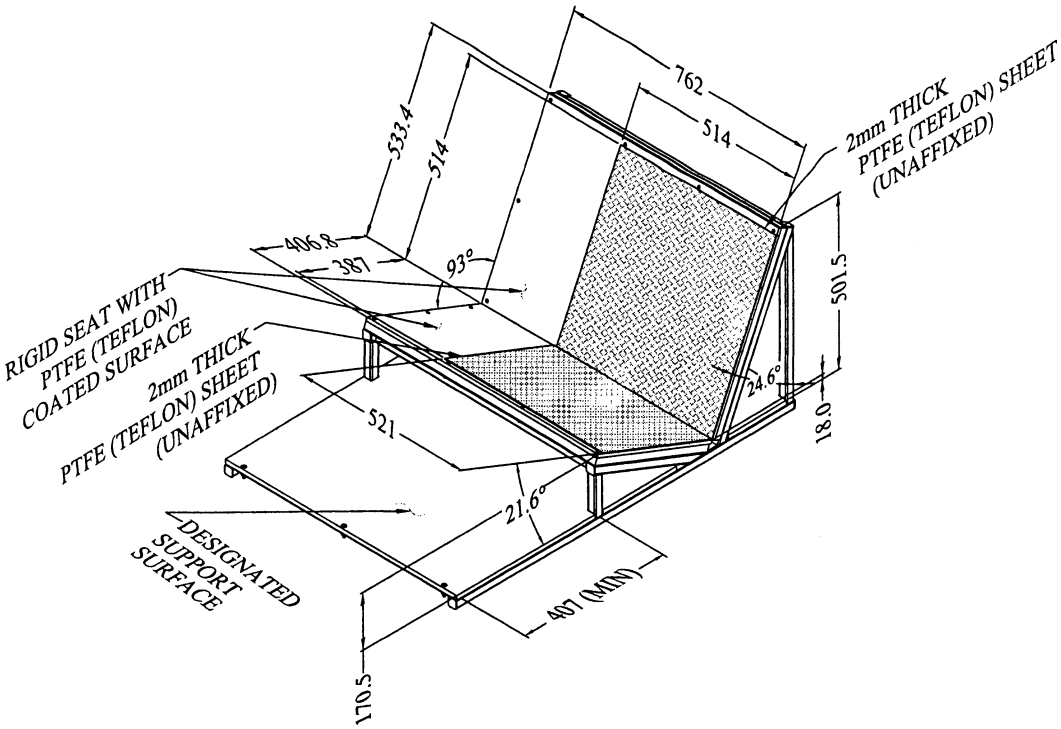

FIGURE V4-A
SHOULDER IMPACT

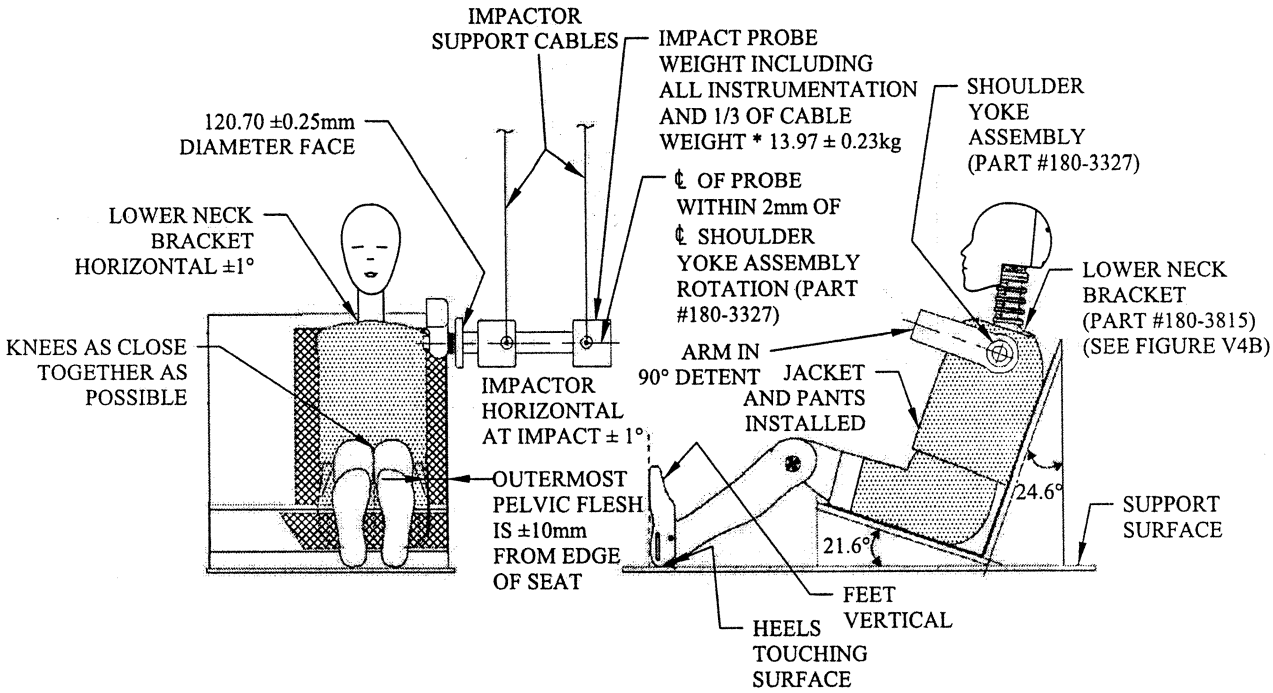

* 1/3 OF CABLE WEIGHT NOT TO EXCEED 5% OF THE TOTAL IMPACTOR PROBE WEIGHT

FIGURE V4-B
SHOULDER IMPACT
(NON-IMPACT SIDE VIEW)

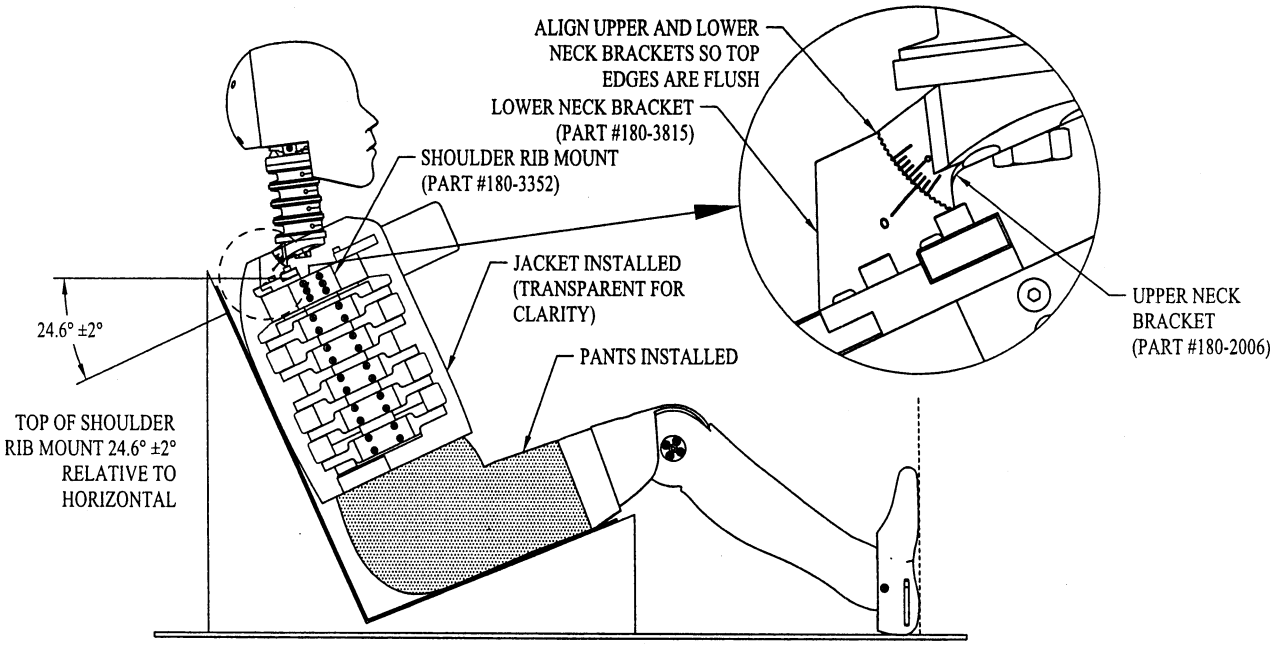

FIGURE V5-A
THORAX WITH ARM IMPACT

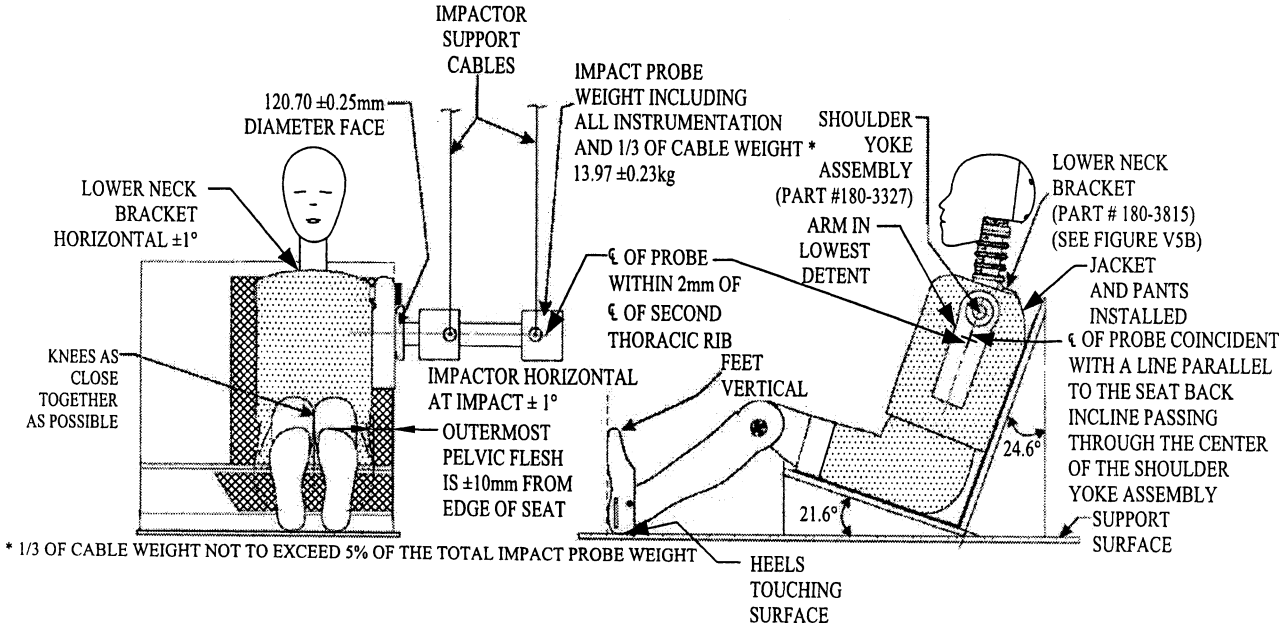

FIGURE V5-B
THORAX WITH ARM IMPACT
(NON-IMPACT SIDE VIEW)

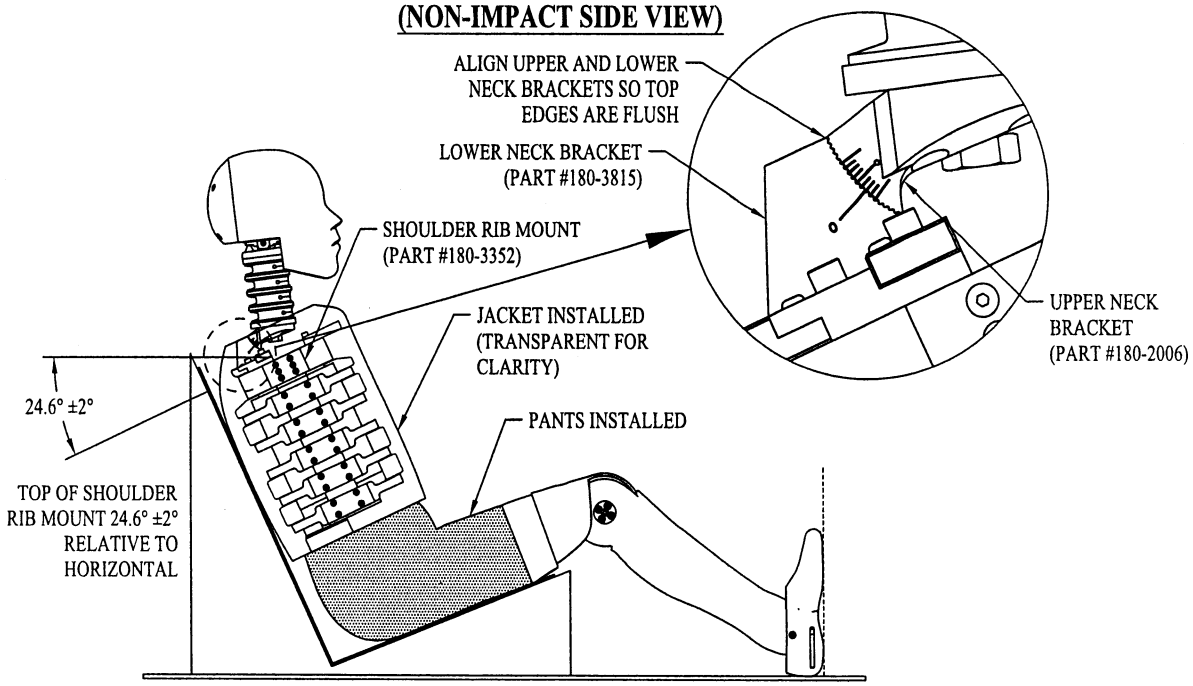

FIGURE V6-A
THORAX WITHOUT ARM IMPACT

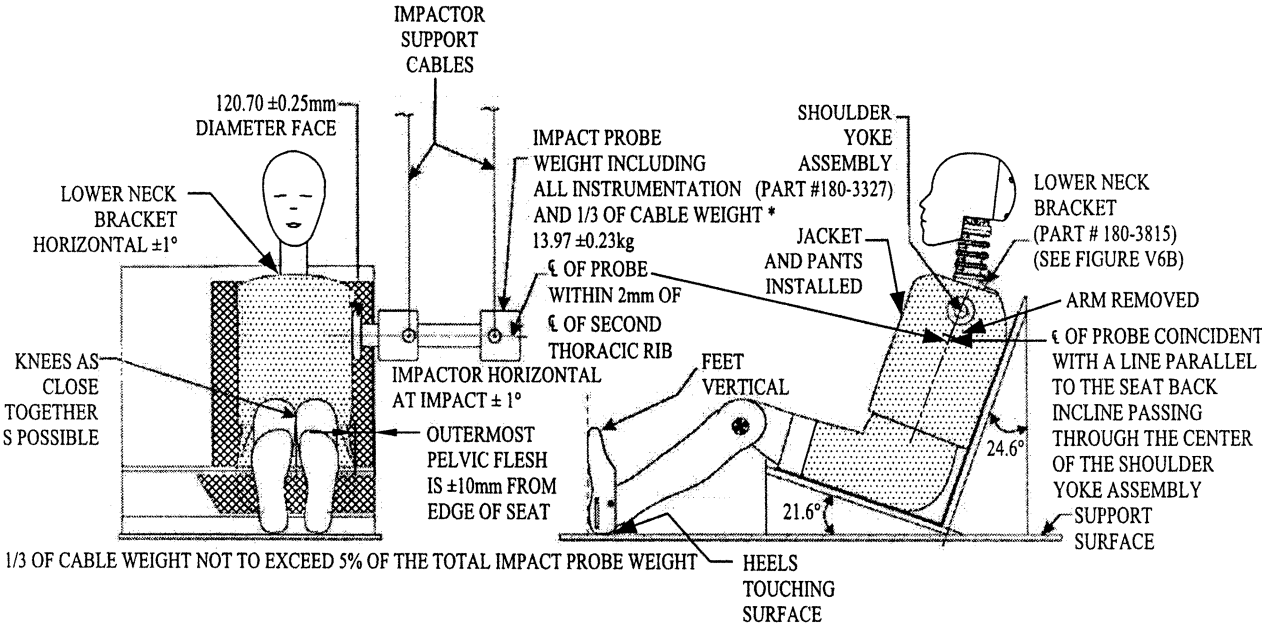

FIGURE V6-B
THORAX WITHOUT ARM IMPACT
(NON-IMPACT SIDE VIEW)

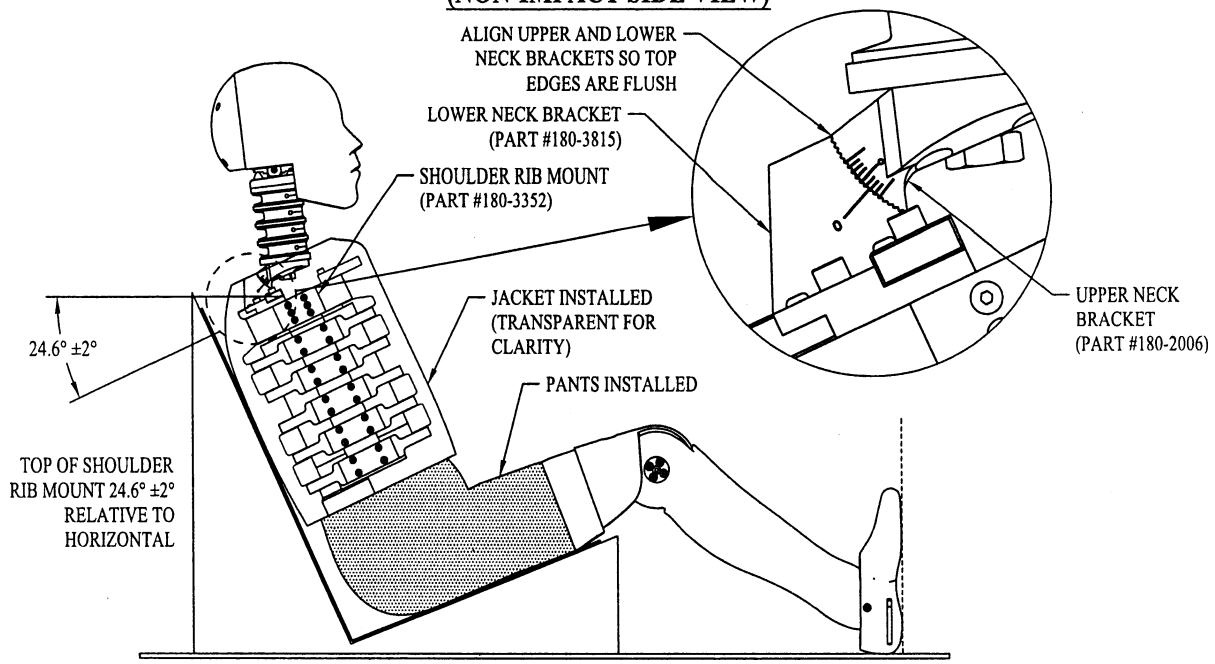

FIGURE V7-A
ABDOMEN IMPACT

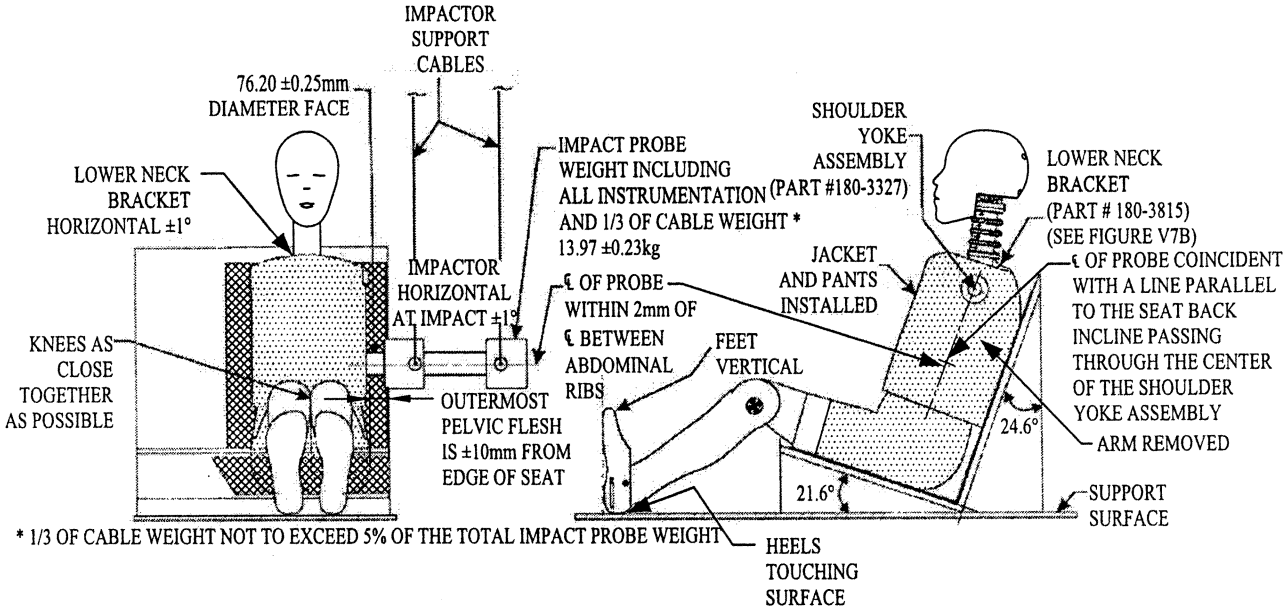

FIGURE V7-B
ABDOMEN IMPACT
(NON-IMPACT SIDE VIEW)

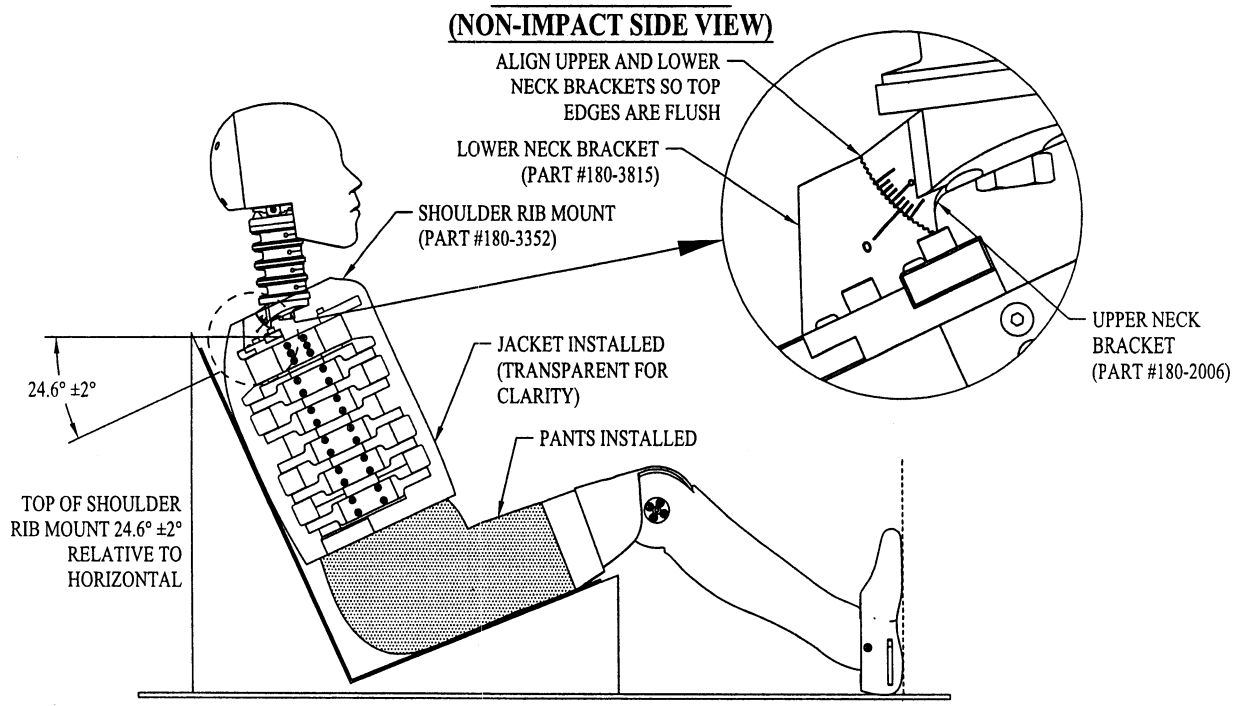

FIGURE V8-A
ACETABULUM IMPACT

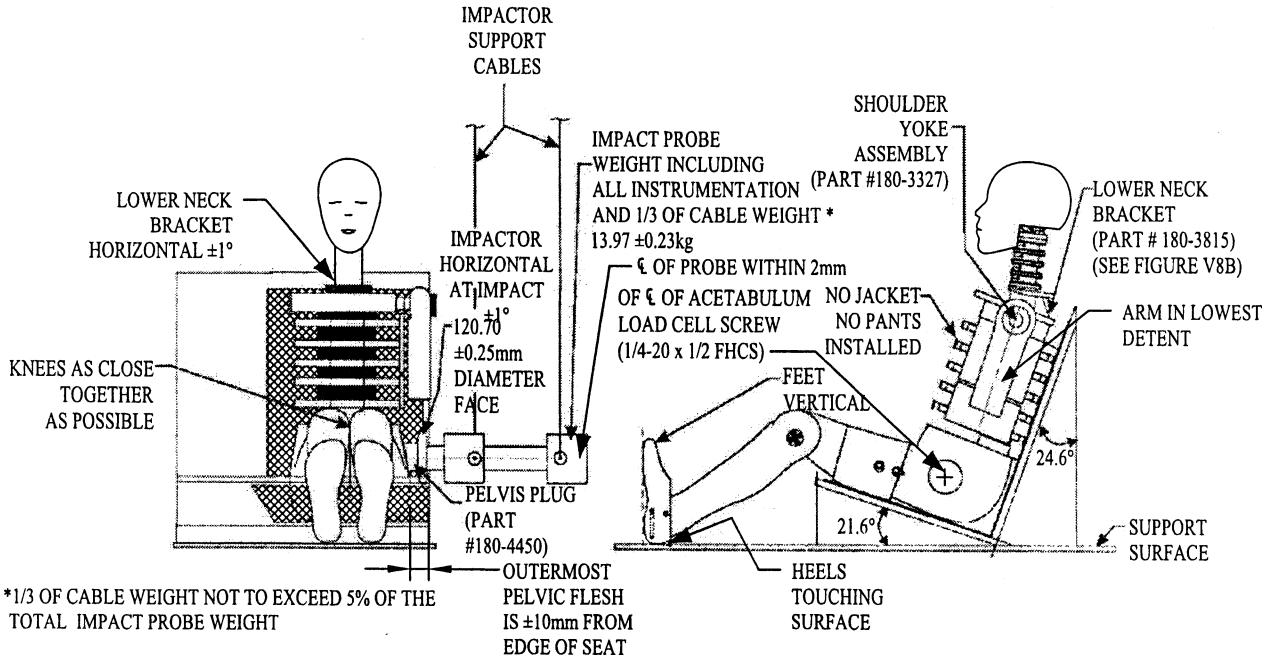

FIGURE V8-B
ACETABULUM IMPACT
(NON-IMPACT SIDE VIEW)

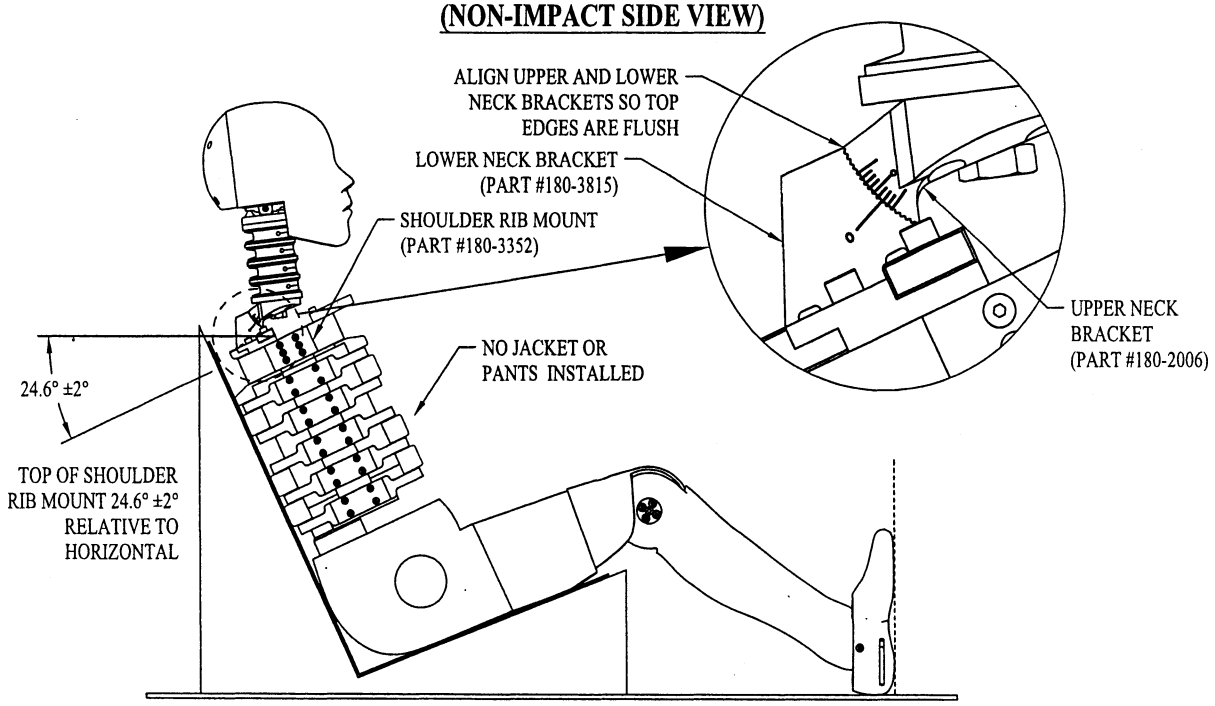

FIGURE V9-A
ILIAC IMPACT

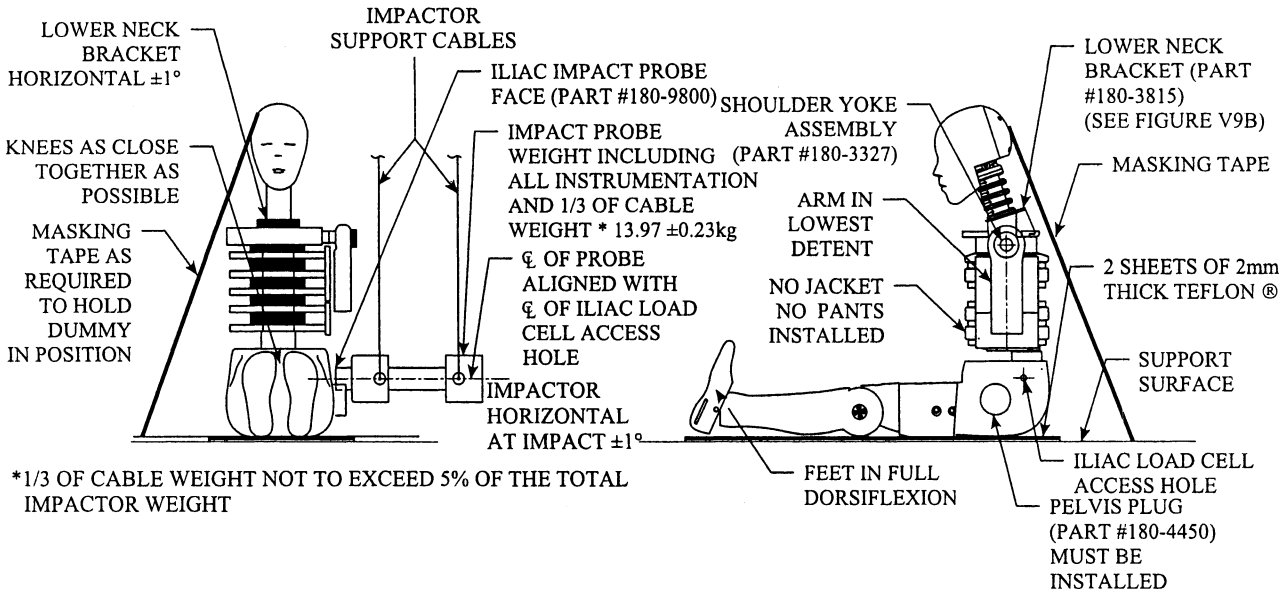

FIGURE V9-B
ILIAC IMPACT
(NON-IMPACT SIDE VIEW)

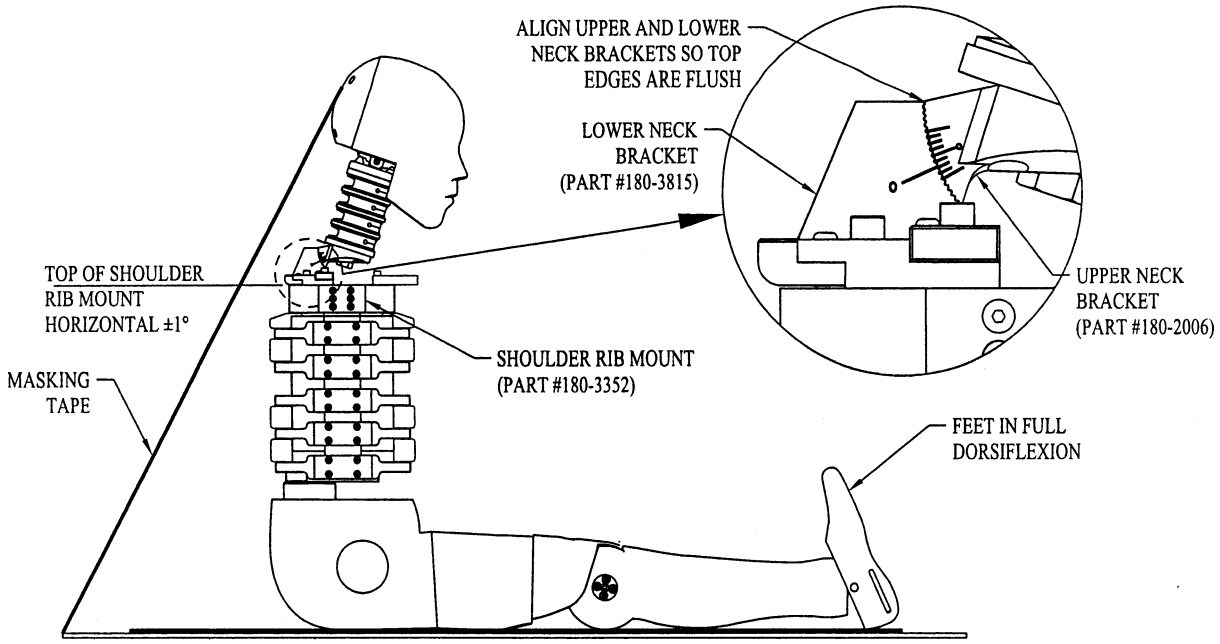

Issued: November 24, 2006.

Nicole R. Nason,

Administrator.

[FR Doc. 06–9555 Filed 12–13–06; 8:45 am]

BILLING CODE 4910–59–C

Federal Register

Thursday,
December 14, 2006

Part III

Environmental Protection Agency

40 CFR Part 82

Protection of Stratospheric Ozone: The 2007 Critical Use Exemption From the Phaseout of Methyl Bromide; Final Rule

ENVIRONMENTAL PROTECTION AGENCY

40 CFR Part 82

[EPA–HQ–OAR–2005–0538; FRL–8257–2]

RIN 2060–AN54

Protection of Stratospheric Ozone: The 2007 Critical Use Exemption From the Phaseout of Methyl Bromide

AGENCY: Environmental Protection Agency (EPA).

ACTION: Final rule.

SUMMARY: EPA is finalizing an exemption to the phaseout of methyl bromide to meet the needs of 2007 critical uses. Specifically, EPA is authorizing uses that will qualify for the 2007 critical use exemption and the amount of methyl bromide that may be produced, imported, or supplied from inventory for those uses in 2007. EPA is taking action under the authority of the Clean Air Act to reflect recent consensus Decisions taken by the Parties to the Montreal Protocol on Substances that Deplete the Ozone Layer (Protocol) at the 17th Meeting of the Parties (MOP).

DATES: This final rule is effective on December 14, 2006.

ADDRESSES: EPA has established a docket for this action identified under Docket ID No. EPA–HQ–OAR–2005–0538. All documents in the docket are listed on the *http://www.regulations.gov* site. Although listed in the index, some information is not publicly available, *e.g.*, CBI or other information whose disclosure is restricted by statute. Certain other material, such as copyrighted material, is not placed on the Internet and will be publicly available only in hard copy form. Publicly available docket materials are available only through *www.regulations.gov* or in hard copy. To obtain copies of materials in hard copy, please call the EPA Docket Center at (202) 564–1744 between the hours of 8:30am–4:30pm E.S.T., Monday–Friday, excluding legal holidays, to schedule an appointment. The EPA Docket Center's Public Reading Room address is EPA/DC, EPA West, Room 3334, 1301 Constitution Ave. NW., Washington, DC.

FOR FURTHER INFORMATION CONTACT: Marta Montoro, Office of Atmospheric Programs, Stratospheric Protection Division, Mail Code 6205J, Environmental Protection Agency, 1200 Pennsylvania Ave, NW., Washington, DC 20460; telephone number (202) 343–9321; fax number (202) 343–2338; e-mail address: *montoro.marta@epa.gov*.

SUPPLEMENTARY INFORMATION: This final rule concerns Clean Air Act (CAA) restrictions on the consumption, production, and use of methyl bromide (a class I, Group VI controlled substance) for critical uses during calendar year 2007. Under the CAA, methyl bromide consumption (consumption is defined under the CAA as production plus imports minus exports) and production was phased out on January 1, 2005 apart from allowable exemptions, namely the critical use exemption and the quarantine and preshipment exemption. With this action, EPA is authorizing the uses that will qualify for the 2007 critical use exemption as well as specific amounts of methyl bromide that may be produced, imported, or made available from stocks for critical uses in 2007.

Section 553(d) of the Administrative Procedure Act (APA), 5 U.S.C. Chapter 5, generally provides that rules may not take effect earlier than 30 days after they are published in the **Federal Register**. EPA is issuing this final rule under section 307(d) of the Clean Air Act, which states: ''The provisions of section 553 through 557 * * * of Title 5 shall not, except as expressly provided in this section, apply to actions to which this subsection applies.'' CAA section 307(d)(1). Thus, section 553(d) of the APA does not apply to this rule. EPA is nevertheless acting consistently with the policies underlying APA section 553(d) in making this rule effective on December 14, 2006. APA section 553(d) provides an exception for any action that grants or recognizes an exemption or relieves a restriction. This final rule grants an exemption from the phaseout of methyl bromide.

Table of Contents

I. General Information
A. Regulated Entities
II. What Is the Background to the Phaseout Regulations for Ozone-Depleting Substances?
III. What Is Methyl Bromide?
IV. What Is the Legal Authority for Exempting the Production and Import of Methyl Bromide for Critical Uses Authorized by the Parties to the Montreal Protocol?
V. What Is the Critical Use Exemption Process?
A. Background of the Process
B. How Does This Final Rulemaking Relate to Previous Critical Use Exemption Rulemakings?
C. Critical Uses and Adjustments to Critical Use Amounts
D. The Criteria in Decisions IX/6 and Ex. I/4
E. Emissions Minimization
F. Critical Use Allowance Allocations
G. Critical Stock Allowance Allocations and Inventory of Methyl Bromide
VI. Statutory and Executive Order Reviews
A. Executive Order No. 12866: Regulatory Planning and Review
B. Paperwork Reduction Act
C. Regulatory Flexibility Act
D. Unfunded Mandates Reform Act
E. Executive Order No. 13132: Federalism
F. Executive Order No. 13175: Consultation and Coordination With Indian Tribal Governments
G. Executive Order No. 13045: Protection of Children From Environmental Health and Safety Risks
H. Executive Order No. 13211: Actions That Significantly Affect Energy Supply, Distribution, or Use
I. National Technology Transfer and Advancement Act
J. Congressional Review Act

I. General Information

A. Regulated Entities

Entities potentially regulated by this action are those associated with the production, import, export, sale, application, and use of methyl bromide covered by an approved critical use exemption. Potentially regulated categories and entities include:

Category	Examples of regulated entities
Industry	Producers, Importers and Exporters of methyl bromide; Applicators, Distributors of methyl bromide; Users of methyl bromide, *e.g.*, farmers of vegetable crops, fruits and seedlings; and owners of stored food commodities and structures such as grain mills and processors, agricultural researchers.

The above table is not intended to be exhaustive, but rather to provide a guide for readers regarding entities likely to be regulated by this action. This table lists the types of entities that EPA is aware could potentially be regulated by this action. To determine whether your facility, company, business, or organization is regulated by this action, you should carefully examine the regulations promulgated at 40 CFR part 82, subpart A. If you have questions regarding the applicability of this action to a particular entity, consult the person

listed in the preceding **FOR FURTHER INFORMATION CONTACT** section.

II. What Is the Background to the Phaseout Regulations for Ozone-Depleting Substances?

The current regulatory requirements of the Stratospheric Ozone Protection Program that limit production and consumption of ozone-depleting substances can be found at 40 CFR part 82, subpart A. The regulatory program was originally published in the **Federal Register** on August 12, 1988 (53 FR 30566), in response to the 1987 signing and subsequent ratification of the Montreal Protocol on Substances that Deplete the Ozone Layer (Protocol). The Protocol is the international agreement aimed at reducing and eliminating the production and consumption of stratospheric ozone depleting substances. The U.S. was one of the original signatories to the 1987 Montreal Protocol and the U.S. ratified the Protocol on April 12, 1988. Congress then enacted, and President George H.W. Bush signed into law, the Clean Air Act Amendments of 1990 (CAAA of 1990) which included Title VI on Stratospheric Ozone Protection, codified as 42 U.S.C. Chapter 85, Subchapter VI, to ensure that the United States could satisfy its obligations under the Protocol. EPA issued new regulations to implement this legislation and has made several amendments to the regulations since that time.

III. What Is Methyl Bromide?

Methyl bromide is an odorless, colorless, toxic gas which is used as a broad-spectrum pesticide and is controlled under the CAA as a class I ozone-depleting substance (ODS). Methyl bromide is used in the U.S. and throughout the world as a fumigant to control a wide variety of pests such as insects, weeds, rodents, pathogens, and nematodes. Additional characteristics and details about the uses of methyl bromide can be found in the proposed rule on the phaseout schedule for methyl bromide published in the **Federal Register** on March 18, 1993 (58 FR 15014) and the final rule published in the **Federal Register** on December 10, 1993 (58 FR 65018).

The phaseout schedule for methyl bromide production and consumption was revised in a direct final rulemaking on November 28, 2000 (65 FR 70795), which allowed for the phased reduction in methyl bromide consumption and extended the phaseout to 2005. The revised phaseout schedule was again amended to allow for an exemption for quarantine and preshipment purposes on July 19, 2001 (66 FR 37751) with an interim final rule and with a final rule on January 2, 2003 (68 FR 238). Information on methyl bromide can be found at *http://www.epa.gov/ozone/mbr and http://www.unep.org/ozone* or by contacting the Stratospheric Ozone Hotline at 1–800–296–1996.

Because it is a pesticide, methyl bromide is also regulated by EPA under the Federal Insecticide, Fungicide, and Rodenticide Act (FIFRA) and other statutes and regulatory authority, as well as by States under their own statutes and regulatory authority. Under FIFRA, methyl bromide is a restricted use pesticide and therefore subject to certain Federal and State requirements governing its sale, distribution, and use. Nothing in this final rule implementing the Clean Air Act is intended to derogate from provisions in any other Federal, State, or local laws or regulations governing actions including, but not limited to, the sale, distribution, transfer, and use of methyl bromide. All entities that would be affected by provisions of this final rule must continue to comply with FIFRA and other pertinent statutory and regulatory requirements for pesticides (including, but not limited to, requirements pertaining to restricted use pesticides) when importing, exporting, acquiring, selling, distributing, transferring, or using methyl bromide for critical uses. The regulations in this action are intended only to implement the CAA restrictions on the production, consumption and use of methyl bromide for critical uses exempted from the phaseout of methyl bromide.

IV. What Is the Legal Authority for Exempting the Production and Import of Methyl Bromide for Critical Uses Authorized by the Parties to the Montreal Protocol?

Methyl bromide was added to the Protocol as an ozone-depleting substance in 1992 through the Copenhagen Amendment to the Protocol. The Parties agreed that each industrialized country's level of methyl bromide production and consumption in 1991 should be the baseline for establishing a freeze in the level of methyl bromide production and consumption for industrialized countries. EPA published a final rule in the **Federal Register** on December 10, 1993 (58 FR 65018), listing methyl bromide as a class I, Group VI controlled substance, freezing U.S. production and consumption at this 1991 level, and, in 40 CFR 82.7, setting forth the percentage of baseline allowances for methyl bromide granted to companies in each control period (each calendar year) until the year 2001, when the complete phaseout would occur. This phaseout date was established in response to a petition filed in 1991 under sections 602(c)(3) and 606(b) of the CAAA of 1990, requesting that EPA list methyl bromide as a class I substance and phase out its production and consumption. This date was consistent with section 602(d) of the CAAA of 1990, which for newly listed class I ozone-depleting substances provides that ''no extension [of the phaseout schedule in section 604] under this subsection may extend the date for termination of production of any class I substance to a date more than 7 years after January 1 of the year after the year in which the substance is added to the list of class I substances.'' EPA based its action on scientific assessments and actions by the Parties to the Montreal Protocol to freeze the level of methyl bromide production and consumption for industrialized countries at the 1992 Meeting of the Parties in Copenhagen.

At their 1995 meeting, the Parties made adjustments to the methyl bromide control measures and agreed to reduction steps and a 2010 phaseout date for industrialized countries with exemptions permitted for critical uses. At that time, the U.S. continued to have a 2001 phaseout date in accordance with the CAAA of 1990 language. At their 1997 meeting, the Parties agreed to further adjustments to the phaseout schedule for methyl bromide in industrialized countries, with reduction steps leading to a 2005 phaseout for industrialized countries. The controls on methyl bromide appear in Article 2H of the Protocol. Critical use exemptions are addressed in Article 2H(5), which provides that the 2005 methyl bromide phaseout shall not apply ''to the extent the Parties decide to permit the level of production or consumption that is necessary to satisfy uses agreed by them to be critical uses.''

In October 1998, the U.S. Congress amended the CAA to prohibit the termination of production of methyl bromide prior to January 1, 2005, to require EPA to bring the U.S. phaseout of methyl bromide in line with the schedule specified under the Protocol, and to authorize EPA to provide exemptions for critical uses. These amendments were contained in Section 764 of the 1999 Omnibus Consolidated and Emergency Supplemental Appropriations Act (Pub. L. 105–277, October 21, 1998) and were codified in Section 604 of the CAA, 42 U.S.C. 7671c. The amendment that specifically addresses the critical use exemption appears at Section 604(d)(6), 42 U.S.C. 7671c(d)(6). Section 604(d)(6) provides that ''[t]o the extent consistent with the

Montreal Protocol, the Administrator, after notice and the opportunity for public comment, and after consultation with other departments or instrumentalities of the Federal Government having regulatory authority related to methyl bromide, including the Secretary of Agriculture, may exempt the production, importation, and consumption of methyl bromide for critical uses.'' More generally, Section 614(b) provides that Title VI of the CAAA of 1990 ''shall be construed, interpreted, and applied as a supplement to the terms and conditions of the Montreal Protocol.''

On November 28, 2000, EPA issued regulations to amend the phaseout schedule for methyl bromide and extend the complete phaseout of production and consumption to 2005 (65 FR 70795). On December 23, 2004 (69 FR 76982), EPA published a final rule (the ''Framework Rule'') in the **Federal Register** that established the framework for the critical use exemption; set forth a list of approved critical uses for 2005; and specified the amount of methyl bromide that could be supplied in 2005 from pre-phaseout inventory and new production or import to meet the needs of approved critical uses. EPA then published a second final rule that added additional uses to the exemption program for 2005 and allocated additional critical stock allowances (70 FR 73604). EPA published a final rule on February 6, 2006 to exempt production and import of methyl bromide for 2006 critical uses and to indicate which uses met the criteria for the exemption program for that year (71 FR 5985). A Technical Correction amending the critical use allowances was published on April 28, 2006 (71 FR 25077). With this action, under authority of section 604(d)(6) of the CAA, EPA is listing the uses that will qualify as approved critical uses in 2007 and the amount of methyl bromide required to satisfy those uses.

This action reflects Decision XVII/9, taken at the Parties' Seventeenth Meeting in December 2005. In accordance with Article 2H(5), the Parties have issued several Decisions pertaining to the critical use exemption. These include Decisions IX/6 and Ex. I/4, which set forth criteria for review of proposed critical uses. The status of Decisions is addressed in the recent D.C. Circuit opinion, *NRDC* v. *EPA*., D.C. Cir. No. 04–1438 (August 29, 2006), 2006 U.S. App. LEXIS 22074, and in EPA's ''Supplemental Brief for the Respondent,'' filed in *NRDC* v. *EPA* and available on Docket No. EPA–HQ–OAR–2005–0538. In this final rule, EPA is honoring commitments made by the United States in the Montreal Protocol context.

V. What Is the Critical Use Exemption Process?

A. Background of the Process

Starting in 2002, EPA began notifying applicants of the process for obtaining a critical use exemption to the methyl bromide phaseout. On May 10, 2002, the Agency published its first notice in the **Federal Register** (67 FR 31798) announcing the availability of the application for a critical use exemption and the deadline for submission of the requisite data. Applicants were informed that they may apply as individuals or as part of a group of users (a ''consortium'') who face the same limiting critical conditions (*i.e.* specific conditions that establish a critical need for methyl bromide). EPA has repeated this process annually since then. The critical use exemption is designed to permit production and import of methyl bromide for uses that do not have technically and economically feasible alternatives.

The criteria for the exemption initially appeared in Decision IX/6 of the Parties to the Protocol. In that Decision, the Parties agreed that ''a use of methyl bromide should qualify as 'critical' only if the nominating Party determines that: (i) The specific use is critical because the lack of availability of methyl bromide for that use would result in a significant market disruption; and (ii) there are no technically and economically feasible alternatives or substitutes available to the user that are acceptable from the standpoint of environment and public health and are suitable to the crops and circumstances of the nomination.'' These criteria are reflected in EPA's definition of ''critical use'' at 40 CFR 82.3.

In response to the yearly requests for critical use exemption applications published in the **Federal Register**, applicants have provided data on the technical and economic feasibility of using alternatives to methyl bromide. Applicants further submit data on their use of methyl bromide, on research programs into the use of alternatives to methyl bromide, and on efforts to minimize use and emissions of methyl bromide.

EPA's Office of Pesticide Programs reviews the data submitted by applicants, as well as data from governmental and academic sources, to establish whether there are technically and economically feasible alternatives available for a particular use of methyl bromide and whether there would be significant market disruption if no exemption were available. In addition, EPA reviews other parameters of the exemption applications such as dosage and emissions minimization techniques and applicants' research or transition plans. This assessment process culminates with the development of a document referred to as the ''Critical Use Nomination'' or CUN. The CUN is submitted annually by the U.S. Department of State to the United Nations Environment Programme (UNEP)'s Ozone Secretariat. The CUNs of various countries are subsequently reviewed by the Methyl Bromide Technical Options Committee (MBTOC) and the Technical and Economic Assessment Panel (TEAP), which are independent advisory bodies to Parties to the Montreal Protocol. These bodies make recommendations to the Parties on the nominations. The Parties then take a Decision to authorize a critical use exemption for a particular country. The Decision also identifies how much methyl bromide may be supplied for the exempted critical uses. Finally, for each exemption period, EPA provides an opportunity for comment on the amounts of methyl bromide that the Agency has determined to be necessary for critical uses and the uses that the Agency has determined meet the criteria of the critical use exemption.

For more information on the domestic review process and methodology employed by the Office of Pesticide Programs, please refer to a detailed memo titled ''Development of 2003 Nomination for a Critical Use Exemption for Methyl Bromide for the United States of America'' available on the docket for this rulemaking. While the particulars of the data continue to evolve and clerical matters are further streamlined, the technical review itself has remained the same since the inception of the program.

On January 31, 2005, the U.S. Government submitted the third U.S. Nomination for a Critical Use Exemption for Methyl Bromide to UNEP's Ozone Secretariat. This nomination contained the request for 2007 critical uses. On March 16 and 18, 2005, and June 10 and 13, 2005, MBTOC sent questions to the U.S. Government concerning technical and economic issues in the nomination. The U.S. Government transmitted responses to these requests for clarification on April 8, 2005 and August 18, 2005. These documents, together with reports by the advisory bodies noted above, can be accessed in the docket for this rulemaking. The determination in this final rule reflects the analysis contained in those documents.

EPA received one comment requesting it not exempt any methyl bromide for critical uses. The CAA allows the Agency to create an exemption for critical uses from the production and consumption phaseout of methyl bromide. Although the Act does not require EPA to establish an exemption, EPA believes the lack of suitable alternatives for the uses listed as approved critical uses in this rulemaking warrants the continuation of the exemption process begun in 2005.

The history of ozone protection programs has been the transition of industries away from production, import, and use of ozone-depleting substances to alternatives. In some instances a successful transition was possible within the allotted time. In other instances, additional time has been required to allow for the development and market penetration of alternatives. In fact, more than ten years after the phaseout of chlorofluorocarbons (CFCs), the U.S. Government is still exempting the production of CFCs for essential uses in metered dose inhalers. In the instance of critical uses where suitable alternatives are not yet available for all uses, EPA believes it would be inconsistent with the history and the goals of the ozone protection program not to allow for a safety valve in accordance with the provisions of both international and domestic law.

B. How Does This Final Rulemaking Relate to Previous Critical Use Exemption Rulemakings?

The December 23, 2004 Framework Rule (69 FR 76982) established the bulk of the framework for the critical use exemption in the U.S. including trading provisions and recordkeeping and reporting obligations. In this action, EPA is not changing the framework of the exemption program but rather is establishing a list of approved critical uses for 2007 and is issuing allowances that will determine the amount of methyl bromide available for those uses consistent with the Framework Rule.

In the proposed rulemaking, published on July 6, 2006 (71 FR 38325), EPA sought comment on the proposed critical use exemptions for the 2007 calendar year. No major changes to the operational framework were proposed. Some commenters, however, requested that EPA re-examine significant portions of the operational framework identified in the December 23, 2004 Framework Rule. In this action, EPA is only addressing comments within the scope of the proposal, but may consider additional suggestions pertaining to other areas in future critical use exemption rulemakings. With respect to the comments on the operational framework, EPA has already addressed similar points in the Response to Comments document for the Framework Rule, accessible on Docket No. EPA–HQ–OAR–2005–0538.

EPA received three comments concerning the term significant market disruption, as described in Decision IX/6. One commenter requested a proper definition of the term, in addition to the terms ''technical feasibility'' and ''economic feasibility.'' Another commenter stated that the proposal lacked a market disruption finding and that EPA did not provide support for its claims of market disruption. The other commenter noted that the critical use exemption application for the Florida Golf Course Superintendents Association was rejected because of a failure to demonstrate that the loss of methyl bromide would result in significant market disruption, and believes the term is undefined by EPA. These comments are addressed in the separate response to comments document, available on the docket for this action. A description of EPA's application of this concept is available in the memo titled ''Development of the 2003 Nomination for a Critical Use Exemption for Methyl Bromide for the United States of America,'' on Docket Nos. EPA–HQ–OAR–2003–0017, EPA–HQ–OAR–2004–0506, EPA–HQ–OAR–2005–0122, and EPA–HQ–OAR–2005–0538. One commenter stated that a ''significant market disruption'' refers to ''a decrease or delay in supply or an increase in price of a commodity produced with methyl bromide.'' EPA views this as one possible type of market disruption. As stated in the memo available on EPA–HQ–OAR–2004–0506, ''markets are partially defined by the interaction between supply and demand, which determines the price and quantity of a good traded in a market. EPA's position is that a disruption to either side of a market, demand or supply, would result in market disruption.'' For example, if the loss of methyl bromide in strawberry production resulted in significant production decreases, followed by an increase in the price of strawberries—and, depending on the price elasticity of strawberries, potential loss of grower income—EPA could determine that it constituted a significant market disruption.

In determining whether a change in supply or demand is significant, EPA considers several dimensions of which two are key: (1) Individual versus aggregate and (2) absolute versus relative. EPA typically evaluates losses at the individual level, *e.g.*, on a per-acre basis. We then extrapolate to the aggregate loss by multiplying this loss by the number of acres affected, using crop budgets and other relevant information. EPA balances the two measures to determine whether impacts are significant. For example, if the loss of methyl bromide in Michigan for vegetable production results in high prices in the upper Midwest, EPA may determine that it constitutes a significant market disruption, even if producers and consumers in the rest of the country are unaffected.

The other key dimension is absolute versus relative impacts. The loss of a single processing plant may not seem significant. However, if there are only three such plants, the loss of one could still result in significant market disruption. EPA relies on detailed crop budgets and other sources of information for data on production costs, gross revenues, and other measures.

C. Critical Uses and Adjustments to Critical Use Amounts

In Decision XVII/9, taken in December 2005, the Parties to the Protocol agreed as follows: ''for the agreed critical-use categories for 2007, set forth in table C to the annex to the present decision for each Party, to permit, subject to the conditions set forth in the present decision and decision Ex.I/4, the levels of production and consumption for 2007 set forth in table D of the annex to the present decision which are necessary to satisfy critical uses * * *''

The following uses are those set forth in table C of the annex to Decision XVII/9: cucurbits; dry commodities/structures cocoa beans; dried fruit and nuts; NPMA dry commodities/structures (processed foods, herbs & spices, dried milk and cheese processing facilities); dry cure pork products (building and product); eggplant (field); forest nursery seedlings; mills and processors; nursery stock-fruit trees, raspberries, roses; orchard replant; ornamentals; peppers (field); strawberry fruit (field); strawberry runners; tomato (field) and turf grass. When added together, the agreed critical-use levels for 2007 total 6,749,060 kilograms, which is equivalent to 26.4% of the U.S. 1991 methyl bromide consumption baseline of 25,528,000 kilograms. However, the maximum amount of allowable new production or import as set forth in table D of Decision XVII/9 is 5,149,060 kilograms, which is equivalent to 20% of the 1991 methyl bromide consumption baseline. The difference between allowable new production or import and the total critical use amount

will be made up from pre-phaseout inventory. EPA further discusses the breakout between new production or import and stocks in section V.G. of this preamble.

EPA is establishing the following reductions to the amount of newly produced or imported methyl bromide authorized in Decision XVII/9 to satisfy critical uses:

(a) Reductions to accommodate uptake of sulfuryl fluoride in 2007;

(b) Reductions to account for unused critical use methyl bromide at the end of 2005;

(c) Reductions to accommodate increased allocation of critical stock allowances (CSAs).

Eleven commenters objected to EPA's proposed reductions and stated that EPA should grant the full amount of new production allowed by the Parties to the Montreal Protocol in Decision XVII/9. However, another commenter stated that new production and import should be decreased further to account for large inventory. The comments on EPA's proposed reductions are addressed in the subsequent section of this preamble, and the comments on inventory are addressed in Section F.

In the 2006 CUE Rule (71 FR 5985), EPA allocated less methyl bromide for critical uses than was authorized by the Parties, in order to account for the recent registration of sulfuryl fluoride. The Agency based those reductions on the data contained in the 2008 CUN, which was submitted to the Ozone Secretariat in January 2006. The 2008 CUN is available in the docket for the July 6, 2006 proposed rule. The nomination indicated that sulfuryl fluoride is registered to control the relevant pests in all post-harvest sectors except for cheese and dry cured ham use categories and that between 12 percent and 18 percent of the industry, depending on the use category, could feasibly transition to this alternative each year. This analysis still represents the best available data on the transition to sulfuryl fluoride including factors such as potential obstacles in the export of treated commodities. The report of the Methyl Bromide Technical Options Committee (MBTOC) indicated that the MBTOC did not make any reductions in these use categories for the uptake of sulfuryl fluoride in 2007 because the United States Government indicated that it would do so in its domestic allocation procedures. Therefore, EPA is reducing the total volume of critical use methyl bromide by 53,703 kilograms to reflect the continuing transition to sulfuryl fluoride. The July 6, 2006 proposed rule sought comment on the transition rates for sulfuryl fluoride described in the 2008 CUN. In particular, the Agency sought comment on the ability of certain end users, such as dried fruit and nut processors, to use sulfuryl fluoride given the progress made by importing countries in establishing and approving tolerance levels for the use of sulfuryl fluoride. A copy of the 2008 analysis is available in the rulemaking docket for comment.

EPA received 26 comments on the availability of sulfuryl fluoride. Nine commenters stated that EPA's transition estimates of 12%–18% were not justified and were premature, and five commenters contended that the proposed reduction had no factual basis. Four commenters cited the Motion of Stay of Effectiveness of Sulfuryl Fluoride Tolerances, described in the Request For Stay of Tolerances notice published in the **Federal Register** on July 5, 2006 (71 FR 38125). The commenters also cited concerns with the regulatory status of sulfuryl fluoride. One commenter noted that data collection on the efficacy of sulfuryl fluoride is just beginning this year and will continue over the next three years. This commenter requested that EPA not make any additional reductions in methyl bromide allocations until sulfuryl fluoride and other alternatives have been more thoroughly studied. One commenter stated that sulfuryl fluoride is not meeting expectations as an alternative and another questioned the viability of sulfuryl fluoride as a commercial use. Another commenter provided supporting documents, available on the docket for this action, explaining why sulfuryl fluoride uptake has not kept pace with EPA's transition estimates. Similar comments expressed concerns relating to the safety, efficacy, and/or trade limitations associated with sulfuryl fluoride.

In contrast, eight commenters stated that sulfuryl fluoride is a satisfactory alternative to methyl bromide because of its excellent results in application, pest population control, and aeration timing, among other reasons, and supported the use of sulfuryl fluoride in post-harvest applications. Two commenters noted that sulfuryl fluoride could replace all methyl bromide in the post-harvest sector by December 31, 2007. One commenter noted that sulfuryl fluoride provides pest control at all life stages and does not deplete the ozone layer. The commenter provided nineteen supporting documents. Another commenter stated that the market penetration of sulfuryl fluoride is inhibited by the continued availability of methyl bromide through the critical use exemption process.

The Agency sought comments on the ability of certain end-users, such as dried fruit and nut processors, to use sulfuryl fluoride given the progress made by importing countries in establishing and approving tolerance levels for the use of sulfuryl fluoride. One commenter responded by noting that Maximum Residue Levels (MRLs) have been established in Japan, Canada, the European Union, and the U.S. The commenter also noted that sulfuryl fluoride is registered in eight nations. Three other commenters noted that there were few or no tolerances for sulfuryl fluoride.

One commenter suggested EPA poll industries that have the opportunity to use sulfuryl fluoride to identify those able to transition. On August 23, 2006, EPA issued letters to a sample of fumigation and flour milling operations under Section 114 of the CAA in order to obtain better data on sulfuryl fluoride transition estimates. However, the data received from the Section 114 responses did not result in significantly comparable data points and therefore EPA is making no additional sulfuryl fluoride reductions at this time. However, EPA may use the data obtained from the Section 114 responses in future rulemakings and in conjunction with information that EPA may receive in the future.

After considering the comments received, in this final rule, EPA is reducing the amount of newly produced or imported critical use methyl bromide by 53,703 kilograms to reflect the continuing transition to sulfuryl fluoride. The July 6, 2006 proposed rule sought to reduce the amount of newly produced or imported methyl bromide by 68,170 kilograms. However, one post-harvest sub-sector had been double-counted in the original post-harvest calculations. EPA has placed the revised spreadsheet demonstrating the revised calculation on the docket. Responses to specific comments appear in the separate Response To Comment document, available on the docket for this rulemaking.

As described in the December 23, 2004 Framework Rule (69 FR 76997), EPA is deducting the amount of unused methyl bromide from the total number of allowances issued for the control period following the control period immediately after the control period when the methyl bromide was unused for critical uses. For example, all unused methyl bromide that was produced or imported under the critical use exemption in 2005 was reported to EPA in 2006 and would be reduced from the total allowable levels of new production/import in 2007. EPA's July

6, 2006 proposed rule proposed to reduce the total level of new production and import for critical uses by 443,000 kilograms to reflect the total level of unused material available at the end of 2005. As described in the Framework Rule, after applying this reduction to the total volumes of allowable new production or import, EPA allocates prorated critical use allowances (CUAs) to each company based on their 1991 baseline market share in the corresponding proposal.

EPA received fourteen comments objecting to EPA's proposal to reduce the level of new production and import for critical uses by 443,000 kilograms to reflect the total level of unused material at the end of 2005. The commenters contend that the unused amount described in the proposal was largely attributed to the delay in finalizing the 2005 supplemental rule and that stakeholders should not be penalized.

EPA notes that the accumulation of inventory is not allowed under the critical use exemption program, and that the unused amount consists of material that was produced but was never sold to critical users. The 2005 supplemental rule only authorized an additional 610,655 kilograms of pre-phaseout inventory to be made available for critical uses (70 FR 73604) and did not authorize additional new production or import for the 2005 calendar year. Thus, the 2005 supplemental rule did not affect the carryover amount. Therefore, to account for carryover of inventory, EPA is reducing the level of new production and import for critical uses by 443,000 kilograms as proposed.

Decision XVII/9, paragraph 7, ''request[s] Parties to endeavor to use stocks, where available, to meet any demand for methyl bromide for the purposes of research and development.'' EPA then proposed to reduce the total supply of new production and import for critical uses by an amount equivalent to the total amount authorized for research purposes, which is 21,702 kilograms. The calculations used by the Agency for the research adjustment are available for public comment in the docket for this action. Further, EPA encouraged methyl bromide suppliers to sell pre-phaseout inventory to researchers and encouraged researchers to purchase stocks of methyl bromide.

EPA received three comments stating that research amounts should come from new production amounts because such research is critical to the long-term acceptance of alternatives, and allowing new production for this use will facilitate the transition to non-ozone-depleting substances.

EPA's allocation for the 2007 control period is consistent with the above Decision. To account for research amounts, in this final rule EPA is reducing the amount of methyl bromide available for new production and import by 21,702 kilograms but notes that use of methyl bromide for research purposes will facilitate the transition to alternatives. In response to Decision XVII/9, EPA continues to encourage methyl bromide suppliers to sell inventory to researchers and encourages researchers to purchase inventory. Additional discussion can be found in Section V.F of this final rule.

Lastly, the Agency proposed to allocate critical stock allowances (CSAs) for 2007 critical uses in an amount equal to either 6.2% or 7.5% of baseline. The Agency is allocating CSAs equal to 7.5% of baseline in this final rule. In section V.G. of this preamble, the Agency describes the reasons for this action. Having chosen the larger CSA amount, the Agency is making a corresponding reduction in the amount of new production and import under the exemption program.

On February 6, 2006, EPA amended the label for 1,3-dichloropropene (1,3-D) regarding karst restrictions. Copies of the amended labels are available in the docket for this action. The previous label states ''Do not apply in areas overlying karst geology'' whereas the new label states ''Do not apply this product within 100 feet of karst topographical features.'' The new label language is more instructive on the use of 1,3-D in areas with karst topography, while still protecting the environment, than the previous label language. EPA's assessment of the amount of methyl bromide that may be displaced by the use of 1,3-D over karst areas in the 2007 technical analysis was already based on the revised label language now in place. Therefore, EPA did not propose to make further reductions to the volumes of pre-plant methyl bromide based on the label change. A more detailed explanation of this matter appears in the responses to the MBTOC, available in the docket for this rulemaking. A copy of the label amendment is available in the docket as well. EPA received one comment on the karst label restriction, which is addressed in the Response to Comments document for this action.

With this final rule, EPA is amending Columns B and C of Appendix L to 40 CFR Part 82, Subpart A to reflect the agreed critical-use categories identified in Decision XVII/9 for the 2007 control period (calendar year). The Agency is amending the table of critical uses based, in part, on the technical analysis contained in the 2007 U.S. nomination that assesses data submitted by applicants to the critical use exemption program as well as public and proprietary data on the use of methyl bromide and its alternatives. EPA sought comment on the aforementioned analysis and, in particular, any information regarding changes to the registration or use of alternatives that may have transpired after the 2007 U.S. nomination was written. Such information has the potential to alter the technical or economic feasibility of an alternative and could thus cause EPA to modify the analysis that underpins EPA's determination as to which uses and what amounts of methyl bromide qualify for the critical use exemption. EPA did not receive any comments regarding changes to the registration of an alternative, but did receive five comments stating that it is inappropriate for EPA to revisit the technical analysis contained in the 2007 nomination at this time because the Parties have already authorized critical use amounts for the 2007 calendar year. While EPA is not revising the technical analysis at this time due to the lack of new information regarding the registration or use of alternatives, EPA will continue to consider such information in future rulemakings. Based on the information described above, EPA is determining that the uses in Table I: Approved Critical Uses, with the limiting critical conditions specified, qualify to obtain and use critical use methyl bromide in 2007.

TABLE I.—APPROVED CRITICAL USES

Column A	Column B	Column C
Approved Critical Uses.	Approved Critical User and Location of Use.	Limiting Critical Conditions that either exist, or that the approved critical user reasonably expects could arise without methyl bromide fumigation:

TABLE I.—APPROVED CRITICAL USES—Continued

Column A	Column B	Column C
PRE-PLANT USES		
Cucurbits	(a) Michigan growers	Moderate to severe soilborne fungal disease infestation. Moderate to severe disease infestation. A need for methyl bromide for research purposes.
	(b) Southeastern U.S. limited to growing locations in Alabama, Arkansas, Kentucky, Louisiana, North Carolina, South Carolina, Tennessee, and Virginia.	Moderate to severe yellow or purple nutsedge infestation. Moderate to severe fungal disease infestation. Moderate to severe root knot nematodes. A need for methyl bromide for research purposes.
	(c) Georgia growers	Moderate to severe yellow or purple nutsedge infestation. Moderate to severe fungal disease infestation. Moderate to severe root knot nematodes. A need for methyl bromide for research purposes.
Eggplant	(a) Florida growers	Moderate to severe yellow or purple nutsedge infestation. Moderate to severe nematodes. Moderate to severe disease infestation. Restrictions on alternatives due to karst geology. A need for methyl bromide for research purposes.
	(b) Georgia growers	Moderate to severe yellow or purple nutsedge infestation. Moderate to severe nematodes. Moderate to severe pythium root, collar, crown and root rot. Moderate to severe disease infestation. Moderate to severe southern blight infestation. Restrictions on alternatives due to karst geology. A need for methyl bromide for research purposes.
	(c) Michigan growers	Moderate to severe soilborne fungal disease infestation. A need for methyl bromide for research purposes.
Forest Nursery Seedlings.	(a) Members of the Southern Forest Nursery Management Cooperative limited to growing locations in Alabama, Arkansas, Florida, Georgia, Louisiana, Mississippi, North Carolina, Oklahoma, South Carolina, Tennessee, Texas, and Virginia.	Moderate to severe yellow or purple nutsedge infestation. Moderate to severe disease infestation.
	(b) International Paper and its subsidiaries limited to growing locations in Alabama, Arkansas, Georgia, South Carolina, and Texas.	Moderate to severe yellow or purple nutsedge infestation. Moderate to severe disease infestation.
	(c) Public (government-owned) seedling nurseries in Illinois, Indiana, Kentucky, Maryland, Missouri, New Jersey, Ohio, Pennsylvania, West Virginia, and Wisconsin.	Moderate to severe weed infestation including purple and yellow nutsedge infestation. Moderate to severe Canada thistle infestation. Moderate to severe nematodes. Moderate to severe fungal disease infestation.
	(d) Weyerhaeuser Company and its subsidiaries limited to growing locations in Alabama, Arkansas, North Carolina, and South Carolina.	Moderate to severe yellow or purple nutsedge infestation. Moderate to severe disease infestation. Moderate to severe nematodes and worms.
	(e) Weyerhaeuser Company and its subsidiaries limited to growing locations in Oregon and Washington.	Moderate to severe yellow nutsedge infestation. Moderate to severe fungal disease infestation.
	(f) Michigan growers	Moderate to severe disease infestation. Moderate to severe Canada thistle infestation. Moderate to severe nutsedge infestation. Moderate to severe nematodes.
	(g) Michigan herbaceous perennials growers.	Moderate to severe nematodes. Moderate to severe fungal disease infestation. Moderate to severe yellow nutsedge and other weed infestation.
Orchard Nursery Seedlings.	(a) Members of the Western Raspberry Nursery Consortium limited to growing locations in California and Washington (Driscoll's Raspberries and their contract growers in California and Washington).	Moderate to severe nematode infestation. Presence of medium to heavy clay soils. Prohibition on use of 1,3-dichloropropene products because local township limits on use of this alternative have been reached. A need for methyl bromide for research purposes.
	(b) Members of the California Association of Nurserymen—Deciduous Fruit and Nut Tree Growers.	Moderate to severe nematode infestation. Presence of medium to heavy clay soils. Prohibition on use of 1,3-dichloropropene products because local township limits on use of this alternative have been reached. A need for methyl bromide for research purposes.

TABLE I.—APPROVED CRITICAL USES—Continued

Column A	Column B	Column C
	(c) California rose nurseries	Moderate to severe nematode infestation. Prohibition on use of 1,3-dichloropropene products because local township limits on use of this alternative have been reached. A need for methyl bromide for research purposes.
Strawberry Nurseries	(a) California growers	Moderate to severe disease infestation. Moderate to severe yellow or purple nutsedge infestation. Moderate to severe nematodes. A need for methyl bromide for research purposes.
	(b) Maryland, North Carolina, and Tennessee growers.	Moderate to severe black root rot. Moderate to severe root-knot nematodes. Moderate to severe yellow and purple nutsedge infestation. A need for methyl bromide for research purposes.
Orchard Replant	(a) California stone fruit growers	Moderate to severe nematodes. Moderate to severe fungal disease infestation. Replanted (non-virgin) orchard soils to prevent orchard replant disease. Presence of medium to heavy soils. Prohibition on use of 1,3-dichloropropene products because local township limits on use of this alternative have been reached. A need for methyl bromide for research purposes.
	(b) California table and raisin grape growers.	Moderate to severe nematodes. Moderate to severe fungal disease infestation. Replanted (non-virgin) orchard soils to prevent orchard replant disease. Medium to heavy soils. Prohibition on use of 1,3-dichloropropene products because local township limits for this alternative have been reached. A need for methyl bromide for research purposes.
	(c) California wine grape growers	Moderate to severe nematodes. Moderate to severe fungal disease infestation. Replanted (non-virgin) orchard soils to prevent orchard replant disease. Medium to heavy soils. Prohibition on use of 1,3-dichloropropene products because local township limits for this alternative have been reached. A need for methyl bromide for research purposes.
	(d) California walnut growers	Moderate to severe nematodes. Moderate to severe fungal disease infestation. Replanted (non-virgin) orchard soils to prevent orchard replant disease. Medium to heavy soils. Prohibition on use of 1,3-dichloropropene products because local township limits for this alternative have been reached. A need for methyl bromide for research purposes.
	(e) California almond growers	Moderate to severe nematodes. Moderate to severe fungal disease infestation. Replanted (non-virgin) orchard soils to prevent orchard replant disease. Medium to heavy soils. Prohibition on use of 1,3-dichloropropene products because local township limits for this alternative have been reached. A need for methyl bromide for research purposes.
Ornamentals	(a) California growers	Moderate to severe disease infestation. Moderate to severe nematodes. Prohibition on use of 1,3-dichloropropene products because local township limits for this alternative have been reached. A need for methyl bromide for research purposes.
	(b) Florida growers	Moderate to severe weed infestation. Moderate to severe disease infestation. Moderate to severe nematodes. Karst topography. A need for methyl bromide for research purposes.
Peppers	(a) California growers	Moderate to severe disease infestation. Moderate to severe nematodes. Prohibition on use of 1,3-dichloropropene products because local township limits for this alternative have been reached. A need for methyl bromide for research purposes.
	(b) Alabama, Arkansas, Kentucky, Louisiana, North Carolina, South Carolina, Tennessee, and Virginia growers.	Moderate to severe yellow or purple nutsedge infestation. Moderate to severe nematodes. Moderate to severe pythium root, collar, crown and root rots. Presence of an occupied structure within 100 feet of a grower's field the size of 100 acres or less. A need for methyl bromide for research purposes.

TABLE I.—APPROVED CRITICAL USES—Continued

Column A	Column B	Column C
	(c) Florida growers	Moderate to severe yellow or purple nutsedge infestation. Moderate to severe disease infestation. Moderate to severe nematodes. Karst topography. A need for methyl bromide for research purposes.
	(d) Georgia growers	Moderate to severe yellow or purple nutsedge infestation. Moderate to severe nematodes, or moderate to severe pythium root and collar rots. Moderate to severe southern blight infestation, crown or root rot. A need for methyl bromide for research purposes.
	(e) Michigan growers	Moderate to severe fungal disease infestation. A need for methyl bromide for research purposes.
Strawberry Fruit	(a) California growers	Moderate to severe black root rot or crown rot. Moderate to severe yellow or purple nutsedge infestation. Moderate to severe nematodes. Prohibition on use of 1,3-dichloropropene products because local township limits for this alternative have been reached. Time to transition to an alternative. A need for methyl bromide for research purposes.
	(b) Florida growers	Moderate to severe yellow or purple nutsedge. Moderate to severe nematodes. Moderate to severe disease infestation. Carolina geranium or cut-leaf evening primrose infestation. Karst topography and to a lesser extent a need for methyl bromide for research purposes.
	(c) Alabama, Arkansas, Georgia, Illinois, Kentucky, Louisiana, Maryland, New Jersey, North Carolina, Ohio, South Carolina, Tennessee, and Virginia growers.	Moderate to severe yellow or purple nutsedge. Moderate to severe nematodes. Moderate to severe black root and crown rot. Presence of an occupied structure within 100 feet of a grower's field the size of 100 acres or less. A need for methyl bromide for research purposes.
Tomatoes	(a) Michigan growers	Moderate to severe disease infestation. Moderate to severe fungal pathogen infestation. A need for methyl bromide for research purposes.
	(b) Alabama, Arkansas, Florida, Georgia, Kentucky, Louisiana, North Carolina, South Carolina, Tennessee, and Virginia growers.	Moderate to severe yellow or purple nutsedge infestation. Moderate to severe disease infestation. Moderate to severe nematodes. Presence of an occupied structure within 100 feet of a grower's field the size of 100 acres or less. Karst topography. A need for methyl bromide for research purposes.
Turfgrass	(a) U.S. turfgrass sod nursery producers who are members of Turfgrass Producers International (TPI).	Production of industry certified pure sod. Moderate to severe bermudagrass. Moderate to severe nutsedge. Moderate to severe white grub infestation. Control of off-type perennial grass infestation. A need for methyl bromide for research purposes.
POST-HARVEST USES		
Food Processing	(a) Rice millers in all locations in the U.S. who are members of the USA Rice Millers Association.	Moderate to severe infestation of beetles, weevils or moths. Older structures that can not be properly sealed to use an alternative to methyl bromide. Presence of sensitive electronic equipment subject to corrosivity. Time to transition to an alternative.
	(b) Pet food manufacturing facilities in the U.S. who are active members of the Pet Food Institute (For this rulemaking, "pet food" refers to domestic dog and cat food).	Moderate to severe infestation of beetles, moths, or cockroaches. Older structures that can not be properly sealed to use an alternative to methyl bromide. Presence of sensitive electronic equipment subject to corrosivity. Time to transition to an alternative.
	(c) Kraft Foods in the U.S	Older structures that can not be properly sealed to use an alternative to methyl bromide. Presence of sensitive electronic equipment subject to corrosivity. Time to transition to an alternative.
	(d) Members of the North American Millers' Association in the U.S.	Moderate to severe beetle infestation. Older structures that can not be properly sealed to use an alternative to methyl bromide. Presence of sensitive electronic equipment subject to corrosivity. Time to transition to an alternative.

TABLE I.—APPROVED CRITICAL USES—Continued

Column A	Column B	Column C
	(e) Members of the National Pest Management Association treating cocoa beans in storage and associated spaces and equipment and processed food, cheese, dried milk, herbs, and spices and spaces and equipment in associated processing facilities.	Moderate to severe beetle or moth infestation. Older structures that can not be properly sealed to use an alternative to methyl bromide. Presence of sensitive electronic equipment subject to corrosivity. Time to transition to an alternative.
Commodity Storage	(a) California entities storing walnuts, beans, dried plums, figs, raisins, dates (in Riverside county only), and pistachios in California.	Rapid fumigation is required to meet a critical market window, such as during the holiday season, rapid fumigation is required when a buyer provides short (2 working days or less) notification for a purchase or there is a short period after harvest in which to fumigate and there is limited silo availability for using alternatives. A need for methyl bromide for research purposes.
Dry Cured Pork Products.	(a) Members of the National Country Ham Association.	Moderate to severe red legged ham beetle infestation. Moderate to severe cheese/ham skipper infestation. Moderate to severe dermested beetle infestation. Ham mite infestation.
	(b) Members of the American Association of Meat Processors.	Moderate to severe red legged ham beetle infestation. Moderate to severe cheese/ham skipper infestation. Moderate to severe dermested beetle infestation. Ham mite infestation.
	(c) Nahunta Pork Center (North Carolina).	Moderate to severe red legged ham beetle infestation. Moderate to severe cheese/ham skipper infestation. Moderate to severe dermested beetle infestation. Ham mite infestation.

EPA received five comments on the proposed critical uses for 2007. Four commenters noted that the Southern Forest Nursery Management Cooperative was not listed in the way the consortium had been in previous allocation rules, although the member states were described. In response, EPA agrees with the commenters and is adding ''Southern Forest Nursery Management Cooperative'' to column B under ''Approved Critical Users'' for the Forest Nursery Seedling sector. However, EPA is not adding the State of Kentucky to the consortium description in Column B at this time, which was requested by the commenters, as the corresponding exemption application filed did not list Kentucky as a consortium member. One other commenter requested that the language describing the National Pest Management Association be changed to ''Members of the National Pest Management Association treating cocoa beans in storage and associated spaces and equipment and processed food, cheese, dried milk, herbs and spices and spaces and equipment in associated processing facilities.'' EPA has incorporated this revised language describing the National Pest Management Association because it clarifies that commodities will be fumigated as part of space fumigations, as indicated in the application.

EPA received one set of comments on the pre-plant limiting critical conditions. The commenter requested that karst restriction be removed from the final rule and that the U.S. Government conduct a post-harvest evaluation of the regulatory impact of the 1,3-D label change. However, as stated above, EPA's analysis already took the change in the label language into account when conducting the 2007 analysis, and EPA is not making further reductions in this area. For responses to the remaining pre-plant comments on limiting critical conditions, please see the corresponding Response to Comments document in the docket for this action.

EPA received two comments stating that some post-harvest limiting critical conditions are no longer relevant and should be removed. One commenter also notes that sulfuryl fluoride has superseded phosphine and heat as the preferred alternative in post-harvest use categories. The conditions that the commenter requested be removed are:

- Older structures that cannot be properly sealed
- Presence of sensitive electronic equipment subject to corrosivity
- Rapid fumigation
- Time to transition to an alternative

However, EPA believes these limiting critical conditions are appropriate under certain circumstances. For example, EPA notes that phosphine is a registered alternative and therefore will continue to consider phosphine when conducting future analyses of the post-harvest sector, and the presence of electronic equipment subject to corrosivity is a factor to consider when evaluating this alternative. As per the critical use requirements, EPA will continue to consider heat a non-chemical alternative, as non-chemical alternative information is requested in the application. EPA also notes the sulfuryl fluoride is not registered on beans in California. Additional information on the limiting critical conditions is in the corresponding Response to Comments document for this action.

EPA is finalizing the proposed changes amending the table in 40 CFR part 82, subpart A, Appendix L, as reflected above. Specifically, EPA is adding one reference to column B and deleting seven references. EPA is adding cheese processing facilities to NPMA dry commodities to reflect the authorization of this use in Decision XVII/9 and removing Idaho, Kansas, Nebraska, Oregon, Utah, and Washington from the approved public nursery locations in the Forest Nursery Sector because a 2007 application for these locations was not submitted.

The categories listed in Table I above have been designated critical uses for 2007 in Decision XVII/9 of the Parties. The amount of methyl bromide approved for research purposes is included in the amount of methyl bromide approved by the Parties for the commodities for which ''research'' is indicated as a limiting critical condition in the table above. However, consistent with the approach taken in the 2006 CUE Rule, the Agency is not setting

aside a specific quantity of methyl bromide to be associated with research activities. Methyl bromide is needed for research purposes including experiments that require methyl bromide as a standard control treatment with which to compare the trial alternatives' results. EPA is permitting the following sectors to use critical use methyl bromide for research purposes: cucurbits, dried fruit and nuts, nursery stock, strawberry nurseries, turfgrass, eggplant, peppers, strawberry fruit, tomatoes, and orchard replant. In their applications to EPA, these sectors identified research programs that require the use of methyl bromide.

D. The Criteria in Decisions IX/6 and Ex. I/4

Paragraphs 2 and 5 of Decision XVII/9 request Parties to ensure that the conditions or criteria listed in Decisions Ex. I/4 and IX/6, paragraph 1, are applied to exempted critical uses for the 2007 control period. A discussion of the Agency's application of the criteria in paragraph 1 of Decision IX/6 appears in sections V.A. and V.C. of this preamble. In section V.C. of the original proposal, the Agency solicited comments from the public on the technical basis for determining that the uses listed in this proposed rule meet the criteria of the critical use exemption. The CUNs detail how each proposed critical use meets the criteria listed in paragraph 1 of Decision IX/6, apart from the criterion located at (b)(ii), as well as the criteria in paragraphs 5 and 6 of Decision Ex. I/4. EPA has addressed these comments in the Response to Comments document, available on the docket for this final rule.

The criterion in Decision IX/6(1)(b)(ii), which refers to the use of available stocks of methyl bromide, is addressed in sections V.G. of this preamble. The Agency has previously provided its interpretation of the criterion in Decision IX/6(1)(a)(i) regarding the presence of significant market disruption in the absence of an exemption, and EPA refers readers to the 2006 CUE final rule (71 FR 5989) as well as to the memo on the docket on the CUE process, in addition to Section V.A above, for further elaboration.

The remaining considerations, including the lack of available technically and economically feasible alternatives under the circumstance of the nomination, efforts to minimize use and emissions of methyl bromide where technically and economically feasible, the development of research and transition plans, and the requests in Decision Ex. I/4(5) that Parties consider and implement MBTOC recommendations, where feasible, on reductions in the critical use of methyl bromide and in paragraph 6 for Parties that submit CUNs to include information on the methodology they use to determine economic feasibility are all addressed in the nomination documents.

Some of these criteria are evaluated in other documents as well. For example, the U.S. has further considered matters regarding the adoption of alternatives and research into methyl bromide alternatives, criterion (1)(b)(iii) in Decision IX/6, in the development of the National Management Strategy submitted to the Ozone Secretariat in December 2005 and in on-going consultations with industry. The National Management Strategy addresses all of the aims specified in Decision Ex.I/4(3) to the extent feasible and is available in the docket for this rulemaking.

E. Emissions Minimization

EPA notes for the regulated community the reference to emission minimization techniques in paragraph 6 of Decision XVII/9, which states that Parties shall request critical users to employ ''emission minimization techniques such as virtually impermeable films, barrier film technologies, deep shank injection and/or other techniques that promote environmental protection, whenever technically and economically feasible.'' In addition, EPA understands that research is being conducted on the potential to reduce rates and emissions using newly available high-barrier films and that these studies show promising results. Users of methyl bromide should make every effort to decrease overall emissions of methyl bromide by implementing measures such as the ones listed above, to the extent consistent with state and local laws and regulations. The Agency encouraged researchers and users who are successfully utilizing such techniques to inform EPA of their experiences as part of their comments on the July 6, 2006 proposed rule and to provide such information with their critical use applications. In addition, the Agency welcomed comments on the implementation of emission minimization techniques and whether and how further emission and use minimization could be achieved.

EPA received five comments on emissions minimization. Two commenters stated that EPA should continue to encourage emissions minimization without mandating emissions control technology. EPA strongly encourages emissions minimization techniques, as stated above, and notes that the critical use exemption application contains an emission reduction worksheet.

One commenter suggested that EPA facilitate improvements by communicating beneficial alternatives and publicizing research in a timely manner. EPA agrees with the commenter and will examine ways to improve this communication in the future.

Another commenter asserted that a phaseout of methyl bromide will not contribute to a reduction in ozone depletion, and cited the 2002 World Meteorological Organization's Scientific Assessment of Ozone Depletion. However, the recently published Executive Summary of the Scientific Assessment of Ozone Depletion: 2006 contains the following paragraphs that refute the commenter's conclusions:

''Both the recently observed decline and the 20th Century increase inferred for atmospheric methyl bromide were larger than expected. Although industrial emissions of methyl bromide were thought to account for 20% (range 10–40%) of atmospheric methyl bromide during 1992–1998 (*i.e.*, before production was reduced), observed concentrations are consistent with this fraction having been 30% (range 20–40%). This suggests that fumigation-related emissions could have a stronger influence on atmospheric methyl bromide mixing ratios than estimated in past Assessments, though uncertainties in the variability of natural emission rates and loss, and in the magnitude of methyl bromide banked in recent years, limit our understanding of this sensitivity.

''The percentage reduction in integrated equivalent effective stratospheric chlorine for methyl bromide in Column A is larger than previously reported. This is because of the upward revision of the fraction of anthropogenic emissions relative to total methyl bromide emissions, as well as upward revision in the ozone-depletion effectiveness of bromine atoms compared with chlorine atoms mentioned earlier.

''If critical-use methyl bromide exemptions continue indefinitely at the 2006 level compared to a cessation of these exemptions in 2010 or 2015, midlatitude integrated equivalent effective stratospheric chlorine would increase by 4.7% or 4.0%, respectively.''

Another commenter notes that the main barrier to adoption of emissions controls is the lack of commercial incentives for industry to use emissions control technology for pre-plant, post-harvest, or QPS applications. EPA

believes that by reducing supply through the phaseout will provide an incentive for use minimization and therefore limit emissions. Other points discussed by this commenter can be found in the corresponding Response to Comments document for this action. The Executive Summary is available on the docket for this action, and the full report will be released in December 2006.

F. Critical Use Allowance Allocations

Each critical use allowance (CUA) is equivalent to 1 kg of critical use methyl bromide. These allowances expire at the end of the control period and, as explained in the Framework Rule, are not bankable from one year to the next. This allocation of pre-plant and post-harvest CUAs to the entities listed below is subject to the trading provisions at 40 CFR 82.12, which are discussed in section V.G. of the preamble to the Framework Rule (69 FR 76982).

In the July 6, 2006 proposed rule, EPA proposed that the amount to come from pre-phaseout inventory be either 6.2% of baseline (which is the difference between the agreed U.S. critical use level and the amount of allowable new production and import) or 7.5% of baseline. However, in the proposed rule, both the high and low end of the proposed ranges included an additional amount that had been adjusted to account for the proposed reduced research amount of 21,702 kilograms. As a result, the proposed high end of the CSA range amounted to 1,936,302 kilograms, or 7.6% of baseline. However, EPA is finalizing the CSA amount so that the CSAs reflect exactly 7.5% of baseline, or 1,914,600 kilograms. Similarly, the proposed low end of the range was 1,621,702 kilograms but should have been expressed as 1,600,000 kilograms, which equals 6.2% of baseline. As noted in Section V.C above, the authorized research amount of 21,702 kilograms will be deducted from the amount of newly produced or imported methyl bromide in response to Decision XVII/9. These adjustments do not affect the calculation of the critical use allowances. The calculation spreadsheet is available on Docket ID No. EPA–HQ–OAR–2005–0538. The total critical use exemption amount for 2007 is 6,230,655 kilograms (24.4% of baseline) with 4,316,055 kilograms (16.9% of baseline) of critical use allowances (CUAs) available from new production or import and the remaining amount, 1,914,600 kilograms (7.5% of baseline), available through CSAs. Therefore, the CUAs are allocated as follows:

TABLE II.—ALLOCATION OF CRITICAL USE ALLOWANCES

Company	2007 Critical use allowances for pre-plant uses* (kilograms)	2007 Critical use allowances for post-harvest uses* (kilograms)
Great Lakes Chemical Corp	2,401,699	221,167
Albemarle Corp	987,633	90,949
Ameribrom, Inc	545,787	50,260
TriCal, Inc	16,994	1,565
Total	3,952,114	363,941

* For production or import of class I, Group VI controlled substance exclusively for the Pre-Plant or Post-Harvest uses specified in Appendix L to 40 CFR Part 82.

Paragraph four of Decision XVII/9 states ''that Parties shall endeavor to license, permit, authorize, or allocate quantities of critical use methyl bromide as listed in tables A and C of the annex to the present decision.'' This is similar to language in Decisions Ex. I/3(4) and Ex. II/1(4) regarding 2005 and 2006 critical uses, respectively. The language from these Decisions calls on Parties to endeavor to allocate critical use methyl bromide on a sector basis.

In establishing the critical use exemption program, the Agency endeavored to allocate directly on a sector-by-sector basis by analyzing and proposing this option among others in the August 2004 proposed Framework Rule (69 FR 52366). EPA solicited comment on both universal and sector-based allocation of critical use allowances. The Agency evaluated the various options based on their economic, environmental and practical effects. After receiving comments, EPA determined in the final Framework Rule (69 FR 76989) that a lump-sum, or universal, allocation, modified to include distinct caps for pre-plant and post-harvest uses, was the most efficient and least burdensome approach that would achieve the desired environmental results, and that a sector-specific approach would pose significant administrative and practical difficulties. Although the approach adopted in the Framework Rule does not directly allocate allowances to each category of use, the Agency anticipates that reliance on market mechanisms will achieve similar results indirectly. The TEAP recommendations are based on data submitted by the U.S. which in turn are based on recent historic use data in the current methyl bromide market. In other words, the TEAP recommendations agreed to by the Parties are based on current use and the current use patterns take place in a market where all pre-plant and post-harvest methyl bromide uses compete for a lump sum supply of critical use material. Therefore, the Agency believes that under a system of universal allocations, divided into pre-plant and post-harvest sectors, the actual critical use will closely follow the sector breakout listed by the TEAP. These issues were addressed in the previous rule and EPA is not aware of any factors that would alter the analysis performed during the development of the Framework Rule. EPA did not propose to change the approach adopted in the Framework Rule for the allocation of CUAs but, in an endeavor to address Decision XVII/9(4), EPA considered additional comment on the Agency's allocation of CUAs in the two groupings (pre-plant and post-harvest) that the Agency has employed in the past. A summary of the options analysis conducted by EPA is available in the docket for this rulemaking.

EPA received six comments on the allocation approach. Five commenters believe the current two-group approach is preferable and should be maintained by EPA because it is consistent with the way the market currently operates. One commenter stated that the allocations

should be made directly to each sector, as requested by the Parties, and noted that other countries have established use-specific allocation systems. The commenter also stated that the ''lump sum'' approach delays the transition to alternatives but requested that if EPA does not adopt a use-specific approach, that the current allocation system be maintained. In response, EPA agrees with the majority of the commenters and intends to continue differentiating between ''pre-plant'' and ''post-harvest'' uses as defined in the Framework Rule (69 FR 76982) for the 2007 control period.

G. Critical Stock Allowance Allocations and Inventory of Methyl Bromide

As discussed above and in the December 23, 2004 Framework Rule, an approved critical user may obtain access to exempted production/import of methyl bromide and to limited inventories of pre-phaseout methyl bromide, the combination of which constitute the supply of ''critical use methyl bromide'' intended to meet the needs of agreed critical uses.

In developing this action, the Agency noted that Decision XVII/9 (para. 5) contains the following language: ''that each Party which has an agreed critical use renews its commitment to ensure that the criteria in paragraph 1 of decision IX/6 are applied when licensing, permitting or authorizing critical use of methyl bromide and that such procedures take into account available stocks of banked or recycled methyl bromide.'' This language is similar to language in Decision XVI/2 authorizing 2006 critical uses. Language calling on Parties to address stocks also appears in Decision Ex. I/3, which authorized 2005 critical uses.

In the Framework Rule, which established the architecture of the critical use exemption program and set out the exempted levels of critical use for 2005, EPA interpreted paragraph 5 of Decision Ex. I/3 ''as meaning that the U.S. should not authorize critical use exemptions without including provisions addressing drawdown from stocks for critical uses'' (69 FR 76987). The Framework Rule established provisions governing the sale of pre-phaseout inventories for critical uses, including the concept of CSAs and a prohibition on sale of pre-phaseout inventories for critical uses in excess of the amount of CSAs held by the seller. In addition, EPA noted that inventories were further taken into account through the trading provisions that allow critical use allowances to be converted into CSAs. Under this action, no significant changes would be made to those provisions.

In the February 6, 2006 final rule that determined the amount to come from inventory during the 2006 control period, EPA stated that ''bearing in mind the United States' 'renewed commitment' as stated in Decision Ex II/1, and its experience with the 2005 critical use nomination,'' EPA would exercise its discretion to reduce production/import and authorize an additional amount from inventory (71 FR 5998). For the 2006 control period, EPA authorized 1,136,008 kilograms (5% of baseline) to be supplied from pre-phaseout methyl bromide inventories. EPA noted that ''continued drawdown of inventory for critical uses at the level authorized in the Framework Rule for 2005'' (*i.e.*, 5% of baseline) was an appropriate means, for the 2006 control period, ''of continuing the commitment previously made, in light of our understanding of current inventory and our analysis of the current needs of users.'' In addition, EPA responded to stakeholder concerns that taking 5% of baseline from inventory in 2006 and 6.2% in 2007 would result in shortages. EPA reported that the Agency ''has re-examined the available inventory data and has projected multiple scenarios concerning levels of consumption of existing inventory. Based on these efforts, EPA believes that critical users will continue to be able to meet their needs throughout 2006 and 2007 through the anticipated combination of new production and import and inventory drawdown'' (71 FR 6000).

After EPA published the 2006 final rule, it received data on holdings of pre-2005 stocks from methyl bromide suppliers as part of routine reporting under the CUE program. This data enabled EPA to track and project inventory drawdown. For 2007, EPA proposed that the amount to come from stocks be either 6.2% of baseline (which is the difference between the agreed U.S. critical use level and the amount of allowable new production and import) or 7.5% of baseline. Both amounts are larger than the amount of CSAs in the preceding year of the exemption program and take into account Decisions of the Parties including Decision XVII/9(5). EPA also sought comment on whether some other number in this range would be appropriate.

EPA also noted in the proposed rule that an alternative means of addressing stocks appeared in a recent **Federal Register** notice relating to the essential use exemption program (71 FR 18264). In that context, the relevant Decision stated that ''Parties shall take into account * * * stocks of controlled substances * * * such that no more than a one-year operational supply is maintained by that manufacturer.'' This Decision refers to another exemption program, one that is analogous but structured differently from the CUE, and operating for different applications and circumstances. EPA sought comment on whether, in the critical use exemption context, it would be appropriate to adjust the level of new production and import with the goal of maintaining a stockpile of some specified duration and how many months of inventory of methyl bromide would be appropriate to maintain non-disruptive management of this chemical in the supply chain for purposes of determining availability as inventories are reduced over time.

EPA proposed to allocate critical stock allowances (CSAs) to the entities listed below in Table III for the control period of 2007 in the range of between 6.2% of baseline and 7.5% of baseline. EPA is employing the same methodology and baselines for allocating CSAs as in previous critical use rulemakings (69 FR 76982). The Agency sought comment on the amount of critical use methyl bromide to come from inventory.

EPA received fourteen comments expressing concern about the increased reliance on inventory. These commenters stated that the proposed increase in the amount of methyl bromide to come from inventory is beyond the level approved by the Parties and that an adequate emergency inventory must be maintained. Several commenters stated that increased reliance on inventory puts critical users in jeopardy and noted the possibility of increased competition for this inventory with non-critical users. Commenters also noted the reduction in inventory reserves since 2002.

Two commenters stated that inventory should only be for critical use needs and that existing inventory is sufficient to cover both proposed amounts of CSAs.

EPA received 15 comments on the proportion of critical use methyl bromide that would come from pre-phaseout inventories (allocated as CSAs) and the proportion of new production or import (allocated as CUAs). Fourteen commenters were concerned with the option under which a greater amount of critical use material would come from the pre-phaseout inventory than the minimum amount specified in Decision XVII/9 by the Parties to the Protocol. Five of these commenters stated that the increased reliance on the pre-phaseout inventory

''puts critical use sectors in jeopardy'' because it was being proposed at a time when this inventory is decreasing. One commenter supported the concept of applying a ''strategic reserve'' approach to the critical use exemption program in order to mitigate a potential failure at the single methyl bromide production facility in the U.S. and to support unforeseen demand increases. One commenter stated that EPA underestimated the amount of methyl bromide needed to respond in the event of an emergency, stating that at least a nine-month supply would be needed to bring a currently closed methyl bromide factory back online as opposed to EPA's 100-day estimate. Six commenters said that the strategic inventory should at a minimum equal one year of the critical use need. Three commenters noted that the one-year stockpile should be a minimum standard because the time period is based on the standard used in the ''essential use program'' for CFCs and unlike alternatives to other ozone depleting substances, alternatives to methyl bromide are not universally effective in all geographic locations, even on the same crop, because of the large number of variables involved. Two commenters suggested a 24-month stockpile to maintain non-disruptive management in the methyl bromide supply chain. In contrast with concerns from commenters about taking too much of the 2007 authorized amount from pre-phaseout inventory, which they claim would leave too little in the necessary strategic reserve, EPA received two comments that said although reliance on stocks in the proposed rule is increased from previous years, the amount remains too low. These two commenters believed that EPA should preferentially use the existing stockpiles to support CUEs and not allow any new production or importation unless the stocks are not sufficient to meet critical needs.

EPA believes that allocating CSAs at a level of 7.5% of baseline (1,914,600 kg) is a reasonable drawdown from pre-phaseout inventory for critical uses, recognizing that some amount of methyl bromide must remain in the supply chain. This level accounts for past practice in CSA allocations, the range contained in the proposed rule, and Decision XVII/9, especially given the U.S. role as one of the world's largest suppliers to meet global methyl bromide needs.

Since publication of the proposal for 2007 methyl bromide critical use exemptions (71 FR 38325) EPA released information on the pre-phaseout aggregate inventory at the end of 2003, 2004 and 2005, which is available on the docket for this action. The release of the aggregate end-of-year inventory follows resolution of the two court cases blocking disclosure of a smaller aggregate and an EPA determination that the larger aggregates are not entitled to confidential treatment. EPA notes that some of the inventory available at the end of 2004 was exported to meet Article 5 countries' basic domestic needs during 2005, and some of this inventory was exported to meet a non-Article 5 country's critical use needs in 2005. The inventory has decreased significantly over the three years that EPA has collected data. The average annual drawdown of the inventory has been approximately 12% of baseline.

EPA believes the finalized CSAs for 2007 are appropriate given the U.S.'s commitment to the Montreal Protocol and the history of Decisions of the Parties to the Montreal Protocol. In the Decisions for the 2005 control period, the Parties authorized a total of 7.5% of the 1991 baseline for critical uses in the U.S. beyond the allowable level of new production, which was 30% of baseline. While those Decisions have no direct application to other control periods, they do provide some indication that the drawdown in this final rule is reasonable under the Montreal Protocol.

In addition, Decision XVII/9, which directly addresses critical uses for 2007, states: ''each Party which has an agreed critical use renews its commitment to ensure that the criteria in paragraph 1 of decision IX/6 are applied when licensing, permitting or authorizing critical use of methyl bromide and that such procedures taken into account available stocks of banked or recycled methyl bromide.'' Decision XVII/9 authorizes a critical use exemption level for the U.S. that is equivalent to 26.4% of baseline, and states that the U.S. may produce or import at a level equivalent to 20.2% of baseline. It also states that the difference between the two levels may be made up ''by using quantities of methyl bromide from stocks that the Party has recognized to be available.'' Therefore, EPA proposed that the total number of CSAs would be at least 6.2% of baseline. EPA is exercising its discretion in setting the total number of CSAs at 7.5% of baseline, or 1,914,600 kilograms. The Agency believes that using an amount of pre-phaseout inventory greater than the amount that appears on the face of the Decision, when feasible, is an appropriate means of implementing the continuing U.S. commitment as reflected in Decision XVII/9. More specifically, EPA has selected 7.5% for 2007 because of the Parties' earlier agreement to this number and because, under the current circumstances, this level of inventory drawdown for critical uses is feasible. The aggregate inventory data as of December 31, 2005, indicate that pre-phaseout inventory amounts to 39% of baseline and therefore EPA does not anticipate a shortage during 2007.

However, EPA notes that the pre-phaseout inventory is decreasing over time and if the Agency is informed of a severe inventory shortage, it may consider various options including, but not limited to, promulgating a final version of the petition process proposed on October 27, 2005 (70 FR 62030), taking into account comments received on that proposal; proposing a different administrative mechanism to serve the same purpose; or authorizing conversion of a limited number of CSAs to CUAs through a rulemaking, bearing in mind the upper limit on U.S. production/import for critical uses.

EPA appreciates the comments received to date on the appropriate level of inventory and intends to continue exploring the issue in future rulemakings. EPA notes that the Parties have not taken a decision on an appropriate amount of inventory for reserve. Nor has EPA reached any conclusion regarding what amount might be appropriate. Given this uncertainty, and the continuing decline in inventory levels, EPA is exercising caution in this year's CSA allocation. EPA will consider various approaches to this issue in the future based on the data received during this notice and comment rulemaking process and other information obtained by the Agency. While EPA believes that 7.5% is an appropriate amount for 2007, the Agency will revisit whether this is the appropriate figure to use in future allocation rules taking into account the feasibility of such drawdowns and other relevant factors and data presented to the Agency.

Two commenters stated that stocks should be only for critical use needs, and that therefore access to pre-phaseout methyl bromide stocks should be denied to non-critical users and restricted for critical users to prevent ''double dipping,'' as per the Montreal Protocol and Decisions. EPA does not believe the language in the Protocol or subsequent Decisions of the Parties indicates that inventory should be reserved for critical users, nor did EPA request comment on this issue. EPA addressed similar comments in its Response to Comments for the Framework Rule, which is included in the docket for this action. EPA believes that some sectors have relied on pre-phaseout inventories of methyl bromide to test, and perform commercial trials on, alternatives to methyl bromide

instead of pursuing critical use exemptions. This is an appropriate strategy that is consistent with the Protocol. The inventory is assisting both critical use sectors and non-critical use sectors during this period of transition in the U.S. to methyl bromide alternatives that are verifiably feasible from a technical and economic standpoint. The inventory has also helped the world's methyl bromide supply chain make the transition to the post-phaseout controls without interruptions to the amount available for export to Article 5 countries and without interruptions to the shipments of CUE material to other CUE countries.

EPA continues to consider the use of pre-phaseout inventories and will revisit the issue again. In addition, EPA received a set of late comments on the proposed rule, after the Parties took Decisions at the 18th Meeting held October 30–November 3, 2006. The comments describe issues related to accelerated inventory drawdown and access to inventories by critical and non-critical users, stating that only critical users should have inventory access. While these comments arrived too late for consideration in this rulemaking, EPA has noted these comments and may explore the merits of the particular points raised by the commenter. These issues were discussed in depth at the 18th Meeting of the Parties as well and the Agency intends to consider the concerns raised by meeting participants.

TABLE III.—ALLOCATION OF CRITICAL STOCK ALLOWANCES

Company	Company
Albemarle	Industrial Fumigation Company.
Ameribrom, Inc	J.C. Ehrlich Co.
Bill Clark Pest Control, Inc.	Pacific Ag.
Blair Soil Fumigation	Pest Fog Sales Corp.
Burnside Services, Inc.	Prosource One.
Cardinal Professional Products.	Reddick Fumigants.
Carolina Eastern, Inc	Royster-Clark, Inc.
Degesch America, Inc	Southern State Cooperative, Inc.
Dodson Bros	Trical Inc.
Great Lakes Chemical Corp.	Trident Agricultural Products.
Harvey Fertilizer & Gas.	UAP Southeast (NC).
Helena Chemical Co	UAP Southeast (SC).
Hendrix & Dail	Univar.
Hy Yield Bromine	Vanguard Fumigation Co.
	Western Fumigation.

Total—1,914,600 kilograms.

Several companies that receive very small amounts of CSAs from EPA have contacted the Agency and requested that they be permitted to permanently retire their allowances. Some companies receive as few as 3 allowances which allow the holder to sell up to 3 kilograms of methyl bromide to critical uses. Due to the small allocation and because they typically do not sell critical use methyl bromide, they find the allocation of CSAs, and associated record-keeping and reporting requirements, to be unduly burdensome. In response to this concern, EPA proposed to allow CSA holders, on a voluntary basis, to permanently relinquish their allowances through written notification to EPA. Such companies would not receive CSA allocations and would be excluded from future allocations. All allowances forfeited by companies through the written notification process would be reallocated to the remaining companies on a pro-rata basis. However, during the comment period, EPA did not receive any notification from CSA holders wishing to relinquish their allowances. Therefore, the CSA holders listed in the July 6, 2006 proposal will continue to be CSA holders during the 2007 calendar year, but EPA may extend the option of relinquishing allowances in future rulemakings.

In sections V.F. and V.G. of the preamble of the proposed rule, EPA sought comment on the amount of critical use methyl bromide to come from stocks compared to new production and import. EPA addressed these comments in Sections V.C and V.F above but will continue to consider other approaches in the future.

VI. Statutory and Executive Order Reviews

A. Executive Order No. 12866: Regulatory Planning and Review

Under Executive Order (EO) 12866 (58 FR 51735, October 4, 1993), this action is a ''significant regulatory action'' because it raises novel or legal policy issues arising out of legal mandates, the President's priorities, or the principles set forth in the Executive Order. Accordingly, EPA submitted this action to the Office of Management and Budget (OMB) for review under EO 12866 and any changes made in response to OMB recommendations have been documented in the docket for this action.

In addition, EPA prepared an analysis of the potential costs and benefits associated with the CUE process. This analysis is contained in the document titled ''Economic Analysis for Methyl Bromide Allocation in the U.S., and a Regulatory Impact Analysis was also prepared. A copy of the analysis is available in the docket for this action and the analysis is briefly summarized here.

The Economic Impact Analysis (EIA) provided an analysis of the costs of regulating the distribution of critical use exemption (CUE) methyl bromide allocated to the United States by the Parties to the Montreal Protocol. The analysis presented the impacts associated with the proposed continued use of methyl bromide through the implementation of the CUE process under two allocation options (each with two allocation methods) and briefly analyzes a third auction option, and compared these results to a complete phaseout in 2005. The sections provide a brief overview on the background of the methyl bromide phaseout and the regulated community, a description of the baseline phaseout analysis and a comparison to the allocation analysis used for this report, an overview of the allocation options, and a description of the costs and overall cost savings to industry participants for the two options.

B. Paperwork Reduction Act

This action does not impose an information collection burden under the provisions of the Paperwork Reduction Act, 44 U.S.C. 3501 *et seq.* The recordkeeping and reporting requirements included in this action are already included in an existing information collection burden and this action does not make any changes that would affect the burden. However, the Office of Management and Budget (OMB) has previously approved the information collection requirements contained in the existing regulations, 40 CFR part 82, under the provisions of the Paperwork Reduction Act, 44 U.S.C. 3501 *et seq.* and has assigned OMB control number 2060–0564, EPA ICR number 2179.03. A copy of the OMB approved ICR may be obtained from Susan Auby, Collection Strategies Division; U.S. Environmental Protection Agency (2822T); 1200 Pennsylvania Ave., NW., Washington, DC 20460 or by calling (202) 566–1672. A copy may also be downloaded off the internet at *http://www.regulations.gov.*

Burden means the total time, effort, or financial resources expended by persons to generate, maintain, retain, or disclose or provide information to or for a Federal agency. This includes the time needed to review instructions; develop, acquire, install, and utilize technology and systems for the purposes of collecting, validating, and verifying

information, processing and maintaining information, and disclosing and providing information; adjust the existing ways to comply with any previously applicable instructions and requirements; train personnel to be able to respond to a collection of information; search data sources; complete and review the collection of information; and transmit or otherwise disclose the information.

An agency may not conduct or sponsor, and a person is not required to respond to a collection of information unless it displays a currently valid OMB control number. The OMB control numbers for EPA's regulations in 40 CFR are listed in 40 CFR part 9.

C. Regulatory Flexibility Act

The Regulatory Flexibility Act (RFA) generally requires an agency to prepare a regulatory flexibility analysis of any rule subject to notice and comment rulemaking requirements under the Administrative Procedure Act or any other statute unless the agency certifies that the rule will not have a significant economic impact on a substantial number of small entities. Small entities include small businesses, small organizations, and small governmental jurisdictions.

For purposes of assessing the impacts of today's rule on small entities, small entity is defined as: (1) A small business that is identified by the North American Industry Classification System (NAICS) Code in the Table below; (2) a small governmental jurisdiction that is a government of a city, county, town, school district or special district with a population of less than 50,000; and (3) a small organization that is any not-for-profit enterprise which is independently owned and operated and is not dominant in its field.

Category	NAICS code	SIC code	NAICS Small business size standard (in number of employees or millions of dollars)
Agricultural Production	1112—Vegetable and Melon farming. 1113—Fruit and Nut Tree Farming. 1114—Greenhouse, Nursery, and Floriculture Production.	0171—Berry Crops. 0172—Grapes. 0173—Tree Nuts. 0175—Deciduous Tree Fruits (except apple orchards and farms).. 0181—Ornamental Floriculture and Nursery products. 0831—Forest Nurseries and Gathering of Forest Products.	$0.75 million. $6 million.
Storage Uses	115114—Post-harvest crop activities (except Cotton Ginning). 493110—General Warehousing and Storage. 493130—Farm product Warehousing Storage.	4221—Farm Product Warehousing and Storage. 4225—General Warehousing and Storage.	$21.5 million.
Distributors and Applicators	115112—Soil Preparation, Planting, and Cultivating.	0721—Crop Planting, Cultivation, and Protection.	$6 million.
Producers and Importers	325320—Pesticide and Other Agricultural Chemical Manufacturing.	2879—Pesticides and Agricultural Chemicals, NEC.	500 employees.

Agricultural producers of minor crops and entities that store agricultural commodities are categories of affected entities that contain small entities. This rule will only affect entities that applied to EPA for a de-regulatory exemption. In most cases, EPA received aggregated requests for exemptions from industry consortia. On the exemption application, EPA asked consortia to describe the number and size distribution of entities their application covered. EPA estimated that 3,218 entities petitioned EPA for an exemption for the 2005 control period. EPA received requests from a comparable number of entities for the 2006 and 2007 control periods. Since many applicants did not provide information on the distribution of sizes of entities covered in their applications, EPA estimated that, based on the above definition, between one-fourth and one-third of the entities may be small businesses. In addition, other categories of affected entities do not contain small businesses based on the above description.

After considering the economic impacts of today's final rule on small entities, EPA certifies that this action will not have a significant economic impact on a substantial number of small entities. In determining whether a rule has a significant economic impact on a substantial number of small entities, the impact of concern is any significant *adverse* economic impact on small entities, since the primary purpose of the regulatory flexibility analyses is to identify and address regulatory alternatives ''which minimize any significant economic impact of the rule on small entities.'' 5 U.S.C. 603 and 604. Thus, an agency may certify that a rule will not have a significant economic impact on a substantial number of small entities if the rule relieves regulatory burden, or otherwise has a positive economic effect on all of the small entities subject to the rule. Since this final rule exempts methyl bromide for approved critical uses after the phaseout date of January 1, 2005, this is a de-regulatory action which will confer a benefit to users of methyl bromide. EPA believes that the estimated de-regulatory value for users of methyl bromide is between $20 million and $30 million annually. We have therefore concluded that today's final rule will relieve regulatory burden for all affected small entities.

D. Unfunded Mandates Reform Act

Title II of the Unfunded Mandates Reform Act of 1995 (UMRA), Pub. L. 104–4, establishes requirements for Federal agencies to assess the effects of their regulatory actions on State, local, and tribal governments and the private sector. Under section 202 of the UMRA, EPA generally must prepare a written statement, including a cost-benefit analysis, for proposed and final rules

with ''Federal mandates'' that may result in expenditures to State, local, and tribal governments, in the aggregate, or to the private sector, of $100 million or more in any one year. Before promulgating an EPA rule for which a written statement is needed, section 205 of the UMRA generally requires EPA to identify and consider a reasonable number of regulatory alternatives and adopt the least costly, most cost-effective or least burdensome alternative that achieves the objectives of the rule. The provisions of section 205 do not apply when they are inconsistent with applicable law. Moreover, section 205 allows EPA to adopt an alternative other than the least costly, most cost-effective or least burdensome alternative if the Administrator publishes with the final rule an explanation why that alternative was not adopted. Before EPA establishes any regulatory requirements that may significantly or uniquely affect small governments, including tribal governments, it must have developed under section 203 of the UMRA a small government agency plan. The plan must provide for notifying potentially affected small governments, enabling officials of affected small governments to have meaningful and timely input in the development of EPA regulatory proposals with significant Federal intergovernmental mandates, and informing, educating, and advising small governments on compliance with the regulatory requirements.

This final rule contains no Federal mandates (under the regulatory provisions of Title II of the UMRA) for State, local, or tribal governments or the private sector. This action is deregulatory and does not impose any new requirements on any entities. Thus, this final rule is not subject to the requirements of sections 202 and 205 of the UMRA. Further, EPA has determined that this rule contains no regulatory requirements that might significantly or uniquely affect small governments.

E. Executive Order No. 13132: Federalism

Executive Order 13132, entitled ''Federalism'' (64 FR 43255, August 10, 1999), requires EPA to develop an accountable process to ensure ''meaningful and timely input by State and local officials in the development of regulatory policies that have federalism implications.'' ''Policies that have federalism implications'' is defined in the Executive Order to include regulations that have ''substantial direct effects on the States, on the relationship between the national government and the States, or on the distribution of power and responsibilities among the various levels of government.''

This final rule does not have federalism implications. It will not have substantial direct effects on the States, on the relationship between the national government and the States, or on the distribution of power and responsibilities among the various levels of government, as specified in Executive Order 13132. This final rule is expected to primarily affect producers, suppliers, importers, exporters, and users of methyl bromide. Thus, Executive Order 13132 does not apply to this rule.

F. Executive Order No. 13175: Consultation and Coordination With Indian Tribal Governments

Executive Order 13175, entitled ''Consultation and Coordination with Indian Tribal Governments'' (65 FR 67249, November 9, 2000), requires EPA to develop an accountable process to ensure ''meaningful and timely input by tribal officials in the development of regulatory policies that have tribal implications.'' This final rule does not have tribal implications, as specified in Executive Order 13175. This final rule does not impose any enforceable duties on communities of Indian tribal governments. Thus, Executive Order 13175 does not apply to this rule.

G. Executive Order No. 13045: Protection of Children From Environmental Health and Safety Risks

Executive Order 13045: ''Protection of Children from Environmental health Risks and Safety Risks'' (62 FR 19885, April 23, 1997) applies to any rule that: (1) Is determined to be ''economically significant'' as defined under Executive Order 12866, and (2) concerns an environmental health or safety risk that EPA has reason to believe may have a disproportionate effect on children. If the regulatory action meets both criteria, the Agency must evaluate the environmental health or safety effects of the planned rule on children, and explain why the planned regulation is preferable to other potentially effective and reasonably feasible alternatives considered by the Agency.

EPA interprets Executive Order 13045 as applying only to those regulatory actions that are based on health or safety risks, such that the analysis required under section 5–501 of the Order has the potential to influence the regulation. This final rule is not subject to Executive Order 13045 because it does not establish an environmental standard intended to mitigate health or safety risks.

H. Executive Order No. 13211: Actions That Significantly Affect Energy Supply, Distribution, or Use

This rule is not a ''significant energy action'' as defined in Executive Order 13211, ''Actions Concerning Regulations That Significantly Affect Energy Supply, Distribution, or Use'' (66 FR 28355 (May 22, 2001)) because it is not likely to have a significant adverse effect on the supply, distribution, or use of energy. This final rule does not pertain to any segment of the energy production economy nor does it regulate any manner of energy use. Further, we have concluded that this rule is not likely to have any adverse energy effects.

I. National Technology Transfer and Advancement Act

As noted in the proposed rule, Section 12(d) of the National Technology Transfer and Advancement Act of 1995 (''NTTAA''), Public Law No. 104–113, 12(d) (15 U.S.C. 272 note) directs EPA to use voluntary consensus standards in its regulatory activities unless to do so would be inconsistent with applicable law or otherwise impractical. Voluntary consensus standards are technical standards (*e.g.*, materials specifications, test methods, sampling procedures, and business practices) that are developed or adopted by voluntary consensus standards bodies. The NTTAA directs EPA to provide Congress, through OMB, explanations when the Agency decides not to use available and applicable voluntary consensus standards. This action does not involve technical standards. Therefore, EPA did not consider the use of any voluntary consensus standards.

J. Congressional Review Act

The Congressional Review Act, 5 U.S.C. 801 *et seq.*, as added by the Small Business Regulatory Enforcement Fairness Act of 1996, generally provides that before a rule may take effect, the agency promulgating the rule must submit a rule report, which includes a copy of the rule, to each House of the Congress and to the Comptroller General of the United States. EPA will submit a report containing this rule and other required information to the U.S. Senate, the U.S. House of Representatives, and the Comptroller General of the United States prior to publication of the rule in the **Federal Register**. A Major rule cannot take effect until 60 days after it is published in the **Federal Register**. This action not a ''major rule'' as defined by 5 U.S.C. 804(2). This rule will be effective December 14, 2006.

List of Subjects in 40 CFR Part 82

Environmental protection, Ozone depletion, Chemicals, Exports, Imports.

Dated: December 11, 2006.

Stephen L. Johnson,

Administrator.

■ For the reasons stated in the preamble, 40 CFR part 82 is amended as follows:

PART 82—PROTECTION OF STRATOSPHERIC OZONE

■ 1. The authority citation for part 82 continues to read as follows:

Authority: 42 U.S.C. 7414, 7601, 7671–7671q.

■ 2. Section 82.8 is amended by revising the table in paragraph (c)(1) and paragraph (c)(2) to read as follows:

§ 82.8 Grant of essential use allowances and critical use allowances.

* * * * *

(c) * * *

(1) * * *

Company	2007 Critical use allowances for pre-plant uses* (kilograms)	2007 Critical use allowances for post-harvest uses* (kilograms)
Great Lakes Chemical Corp	2,401,699	221,167
Albemarle Corp	987,633	90,949
Ameribrom, Inc	545,787	50,260
TriCal, Inc	16,994	1,565
Total	3,952,114	363,941

*For production or import of class I, Group VI controlled substance exclusively for the Pre-Plant or Post-Harvest uses specified in appendix L to this subpart.

(2) Allocated critical stock allowances granted for specified control period. The following companies are allocated critical stock allowances for 2007 on a pro-rata basis in relation to the inventory held by each.

Company	Company
Albemarle	Industrial Fumigation Company.
Ameribrom, Inc	J.C. Ehrlich Co.
Bill Clark Pest Control, Inc.	Pacific Ag.
Blair Soil Fumigation	Pest Fog Sales Corp.
Burnside Services, Inc.	Prosource One.
Cardinal Professional Products.	Reddick Fumigants.
Carolina Eastern, Inc.	Royster-Clark, Inc.
Degesch America, Inc	Southern State Cooperative, Inc.
Dodson Bros	Trical Inc.
Great Lakes Chemical Corp.	Trident Agricultural Products.
Harvey Fertilizer & Gas.	UAP Southeast (NC).
Helena Chemical Co.	UAP Southeast (SC).
Hendrix & Dail	Univar.
Hy Yield Bromine	Vanguard Fumigation Co.
	Western Fumigation.

Total—1,914,600 kilograms.

■ 3. Appendix L to part 82, subpart A is revised to read as follows:

Appendix L to Part 82 Subpart A—Approved Critical Uses and Limiting Critical Conditions for Those Uses for the 2007 Control Period

Column A	Column B	Column C
Approved Critical Uses.	Approved Critical User and Location of Use.	Limiting Critical Conditions that either exist, or that the approved critical user reasonably expects could arise without methyl bromide fumigation:
PRE-PLANT USES		
Cucurbits	(a) Michigan growers	Moderate to severe soilborne fungal disease infestation. Moderate to severe disease infestation. A need for methyl bromide for research purposes.
	(b) Southeastern U.S. limited to growing locations in Alabama, Arkansas, Kentucky, Louisiana, North Carolina, South Carolina, Tennessee, and Virginia.	Moderate to severe yellow or purple nutsedge infestation. Moderate to severe fungal disease infestation. Moderate to severe root knot nematodes. A need for methyl bromide for research purposes.
	(c) Georgia growers	Moderate to severe yellow or purple nutsedge infestation. Moderate to severe fungal disease infestation. Moderate to severe root knot nematodes. A need for methyl bromide for research purposes.
Eggplant	(a) Florida growers	Moderate to severe yellow or purple nutsedge infestation. Moderate to severe nematodes. Moderate to severe disease infestation. Restrictions on alternatives due to karst geology. A need for methyl bromide for research purposes.
	(b) Georgia growers	Moderate to severe yellow or purple nutsedge infestation. Moderate to severe nematodes. Moderate to severe pythium root, collar, crown and root rot. Moderate to severe disease infestation. Moderate to severe southern blight infestation. Restrictions on alternatives due to karst geology. A need for methyl bromide for research purposes.

Column A	Column B	Column C
	(c) Michigan growers	Moderate to severe soilborne fungal disease infestation. A need for methyl bromide for research purposes.
Forest Nursery Seedlings.	(a) Members of the Southern Forest Nursery Management Cooperative limited to growing locations in Alabama, Arkansas, Florida, Georgia, Louisiana, Mississippi, North Carolina, Oklahoma, South Carolina, Tennessee, Texas, and Virginia.	Moderate to severe yellow or purple nutsedge infestation. Moderate to severe disease infestation.
	(b) International Paper and its subsidiaries limited to growing locations in Alabama, Arkansas, Georgia, South Carolina, and Texas.	Moderate to severe yellow or purple nutsedge infestation. Moderate to severe disease infestation.
	(c) Public (government-owned) seedling nurseries in Illinois, Indiana, Kentucky, Maryland, Missouri, New Jersey, Ohio, Pennsylvania, West Virginia, and Wisconsin.	Moderate to severe weed infestation including purple and yellow nutsedge infestation. Moderate to severe Canada thistle infestation. Moderate to severe nematodes. Moderate to severe fungal disease infestation.
	(d) Weyerhaeuser Company and its subsidiaries limited to growing locations in Alabama, Arkansas, North Carolina, and South Carolina.	Moderate to severe yellow or purple nutsedge infestation. Moderate to severe disease infestation. Moderate to severe nematodes and worms.
	(e) Weyerhaeuser Company and its subsidiaries limited to growing locations in Oregon and Washington.	Moderate to severe yellow nutsedge infestation. Moderate to severe fungal disease infestation.
	(f) Michigan growers	Moderate to severe disease infestation. Moderate to severe Canada thistle infestation. Moderate to severe nutsedge infestation. Moderate to severe nematodes.
	(g) Michigan herbaceous perennials growers.	Moderate to severe nematodes. Moderate to severe fungal disease infestation. Moderate to severe yellow nutsedge and other weed infestation.
Orchard Nursery Seedlings.	(a) Members of the Western Raspberry Nursery Consortium limited to growing locations in California and Washington (Driscoll's Raspberries and their contract growers in California and Washington).	Moderate to severe nematode infestation Presence of medium to heavy clay soils. Prohibition on use of 1,3-dichloropropene products because local township limits on use of this alternative have been reached. A need for methyl bromide for research purposes.
	(b) Members of the California Association of Nurserymen—Deciduous Fruit and Nut Tree Growers.	Moderate to severe nematode infestation. Presence of medium to heavy clay soils. Prohibition on use of 1,3-dichloropropene products because local township limits on use of this alternative have been reached. A need for methyl bromide for research purposes.
	(c) California rose nurseries	Moderate to severe nematode infestation. Prohibition on use of 1,3-dichloropropene products because local township limits on use of this alternative have been reached. A need for methyl bromide for research purposes.
Strawberry Nurseries	(a) California growers	Moderate to severe disease infestation. Moderate to severe yellow or purple nutsedge infestation. Moderate to severe nematodes. A need for methyl bromide for research purposes.
	(b) Maryland, North Carolina, and Tennessee growers.	Moderate to severe black root rot. Moderate to severe root-knot nematodes. Moderate to severe yellow and purple nutsedge infestation. A need for methyl bromide for research purposes.
Orchard Replant	(a) California stone fruit growers	Moderate to severe nematodes. Moderate to severe fungal disease infestation. Replanted (non-virgin) orchard soils to prevent orchard replant disease. Presence of medium to heavy soils. Prohibition on use of 1,3-dichloropropene products because local township limits for this alternative have been reached. A need for methyl bromide for research purposes.
	(b) California table and raisin grape growers.	Moderate to severe nematodes. Moderate to severe fungal disease infestation. Replanted (non-virgin) orchard soils to prevent orchard replant disease. Medium to heavy soils. Prohibition on use of 1,3-dichloropropene products because local township limits for this alternative have been reached. A need for methyl bromide for research purposes.

Column A	Column B	Column C
	(c) California wine grape growers	Moderate to severe nematodes. Moderate to severe fungal disease infestation. Replanted (non-virgin) orchard soils to prevent orchard replant disease. Medium to heavy soils. Prohibition on use of 1,3-dichloropropene products because local township limits for this alternative have been reached. A need for methyl bromide for research purposes.
	(d) California walnut growers	Moderate to severe nematodes. Moderate to severe fungal disease infestation. Replanted (non-virgin) orchard soils to prevent orchard replant disease. Medium to heavy soils. Prohibition on use of 1,3-dichloropropene products because local township limits for this alternative have been reached. A need for methyl bromide for research purposes.
	(e) California almond growers	Moderate to severe nematodes. Moderate to severe fungal disease infestation. Replanted (non-virgin) orchard soils to prevent orchard replant disease. Medium to heavy soils. Prohibition on use of 1,3-dichloropropene products because local township limits for this alternative have been reached. A need for methyl bromide for research purposes.
Ornamentals	(a) California growers	Moderate to severe disease infestation. Moderate to severe nematodes. Prohibition on use of 1,3-dichloropropene products because local township limits for this alternative have been reached. A need for methyl bromide for research purposes.
	(b) Florida growers	Moderate to severe weed infestation. Moderate to severe disease infestation. Moderate to severe nematodes. Karst topography. A need for methyl bromide for research purposes.
Peppers	(a) California growers	Moderate to severe disease infestation. Moderate to severe nematodes. A prohibition on the use of 1,3-dichloropropene products because local township limits for this alternative have been reached. A need for methyl bromide for research purposes.
	(b) Alabama, Arkansas, Kentucky, Louisiana, North Carolina, South Carolina, Tennessee, and Virginia growers.	Moderate to severe yellow or purple nutsedge infestation. Moderate to severe nematodes. Moderate to severe pythium root, collar, crown and root rots. Presence of an occupied structure within 100 feet of a grower's field the size of 100 acres or less. A need for methyl bromide for research purposes.
	(c) Florida growers	Moderate to severe yellow or purple nutsedge infestation. Moderate to severe disease infestation. Moderate to severe nematodes. Karst topography. A need for methyl bromide for research purposes.
	(d) Georgia growers	Moderate to severe yellow or purple nutsedge infestation. Moderate to severe nematodes, or moderate to severe pythium root and collar rots. Moderate to severe southern blight infestation, crown or root rot. A need for methyl bromide for research purposes.
	(e) Michigan growers	Moderate to severe fungal disease infestation. A need for methyl bromide for research purposes.
Strawberry Fruit	(a) California growers	Moderate to severe black root rot or crown rot. Moderate to severe yellow or purple nutsedge infestation. Moderate to severe nematodes. Prohibition on use of 1,3-dichloropropene products because local township limits for this alternative have been reached. Time to transition to an alternative. A need for methyl bromide for research purposes.
	(b) Florida growers	Moderate to severe yellow or purple nutsedge. Moderate to severe nematodes. Moderate to severe disease infestation. Carolina geranium or cut-leaf evening primrose infestation. Karst topography and to a lesser extent a need for methyl bromide for research purposes.
	(c) Alabama, Arkansas, Georgia, Illinois, Kentucky, Louisiana, Maryland, New Jersey, North Carolina, Ohio, South Carolina, Tennessee, and Virginia growers.	Moderate to severe yellow or purple nutsedge. Moderate to severe nematodes. Moderate to severe black root and crown rot. Presence of an occupied structure within 100 feet of a grower's field the size of 100 acres or less. A need for methyl bromide for research purposes.

Column A	Column B	Column C
Tomatoes	(a) Michigan growers	Moderate to severe disease infestation. Moderate to severe fungal pathogen infestation. A need for methyl bromide for research purposes.
	(b) Alabama, Arkansas, Florida, Georgia, Kentucky, Louisiana, North Carolina, South Carolina, Tennessee, and Virginia growers.	Moderate to severe yellow or purple nutsedge infestation. Moderate to severe disease infestation. Moderate to severe nematodes. Presence of an occupied structure within 100 feet of a grower's field the size of 100 acres or less. Karst topography. A need for methyl bromide for research purposes.
Turfgrass	(a) U.S. turfgrass sod nursery producers who are members of Turfgrass Producers International (TPI).	Production of industry certified pure sod. Moderate to severe bermudagrass. Moderate to severe nutsedge. Moderate to severe white grub infestation. Control of off-type perennial grass infestation. A need for methyl bromide for research purposes.
POST-HARVEST USES		
Food Processing	(a) Rice millers in all locations in the U.S. who are members of the USA Rice Millers Association.	Moderate to severe infestation of beetles, weevils, or moths. Older structures that can not be properly sealed to use an alternative to methyl bromide. Presence of sensitive electronic equipment subject to corrosivity. Time to transition to an alternative.
	(b) Pet food manufacturing facilities in the U.S. who are active members of the Pet Food Institute (For this final rule, ''pet food'' refers to domestic dog and cat food).	Moderate to severe infestation of beetles, moths, or cockroaches. Older structures that can not be properly sealed to use an alternative to methyl bromide. Presence of sensitive electronic equipment subject to corrosivity. Time to transition to an alternative.
	(c) Kraft Foods in the U.S	Older structures that can not be properly sealed to use an alternative to methyl bromide. Presence of sensitive electronic equipment subject to corrosivity. Time to transition to an alternative.
	(d) Members of the North American Millers' Association in the U.S.	Moderate to severe beetle infestation. Older structures that can not be properly sealed to use an alternative to methyl bromide. Presence of sensitive electronic equipment subject to corrosivity. Time to transition to an alternative.
	(e) Members of the National Pest Management Association treating cocoa beans in storage and associated spaces and equipment and processed food, cheese, dried milk, herbs, and spices and spaces and equipment in associated processing facilities.	Moderate to severe beetle or moth infestation. Older structures that can not be properly sealed to use an alternative to methyl bromide. Presence of sensitive electronic equipment subject to corrosivity. Time to transition to an alternative.
Commodity Storage	(a) California entities storing walnuts, beans, dried plums, figs, raisins, dates (in Riverside county only), and pistachios in California.	Rapid fumigation is required to meet a critical market window, such as during the holiday season, rapid fumigation is required when a buyer provides short (2 working days or less) notification for a purchase or there is a short period after harvest in which to fumigate and there is limited silo availability for using alternatives. A need for methyl bromide for research purposes.
Dry Cured Pork Products.	(a) Members of the National Country Ham Association.	Moderate to severe red legged ham beetle infestation. Moderate to severe cheese/ham skipper infestation. Moderate to severe dermested beetle infestation. Ham mite infestation.
	(b) Members of the American Association of Meat Processors.	Moderate to severe red legged ham beetle infestation. Moderate to severe cheese/ham skipper infestation. Moderate to severe dermested beetle infestation. Ham mite infestation.
	(c) Nahunta Pork Center (North Carolina).	Moderate to severe red legged ham beetle infestation. Moderate to severe cheese/ham skipper infestation. Moderate to severe dermested beetle infestation. Ham mite infestation.

[FR Doc. E6–21399 Filed 12–13–06; 8:45 am]
BILLING CODE 6560–50–P

Reader Aids

Federal Register

Vol. 71, No. 240

Thursday, December 14, 2006

CUSTOMER SERVICE AND INFORMATION

Federal Register/Code of Federal Regulations	
General Information, indexes and other finding aids	**202–741–6000**
Laws	**741–6000**
Presidential Documents	
Executive orders and proclamations	**741–6000**
The United States Government Manual	**741–6000**
Other Services	
Electronic and on-line services (voice)	**741–6020**
Privacy Act Compilation	**741–6064**
Public Laws Update Service (numbers, dates, etc.)	**741–6043**
TTY for the deaf-and-hard-of-hearing	**741–6086**

ELECTRONIC RESEARCH

World Wide Web

Full text of the daily Federal Register, CFR and other publications is located at: **http://www.gpoaccess.gov/nara/index.html**

Federal Register information and research tools, including Public Inspection List, indexes, and links to GPO Access are located at: **http://www.archives. gov/federal__register**

E-mail

FEDREGTOC-L (Federal Register Table of Contents LISTSERV) is an open e-mail service that provides subscribers with a digital form of the Federal Register Table of Contents. The digital form of the Federal Register Table of Contents includes HTML and PDF links to the full text of each document.

To join or leave, go to **http://listserv.access.gpo.gov** and select *Online mailing list archives, FEDREGTOC-L, Join or leave the list (or change settings);* then follow the instructions.

PENS (Public Law Electronic Notification Service) is an e-mail service that notifies subscribers of recently enacted laws.

To subscribe, go to **http://listserv.gsa.gov/archives/publaws-l.html** and select *Join or leave the list (or change settings);* then follow the instructions.

FEDREGTOC-L and **PENS** are mailing lists only. We cannot respond to specific inquiries.

Reference questions. Send questions and comments about the Federal Register system to: **fedreg.info@nara.gov**

The Federal Register staff cannot interpret specific documents or regulations.

FEDERAL REGISTER PAGES AND DATE, DECEMBER

69429–70274 1
70275–70456 4
70457–70642 5
70643–70850 6
70851–71036 7
71037–71462 8
71462–74450 11
74451–74754 12
74755–75082 13
75083–75406 14

CFR PARTS AFFECTED DURING DECEMBER

At the end of each month, the Office of the Federal Register publishes separately a List of CFR Sections Affected (LSA), which lists parts and sections affected by documents published since the revision date of each title.

2 CFR

901 70457

3 CFR

Proclamations:
8087 70455
8088 70851
8089 70853
8090 75083
Executive Orders:
12866 (See EO 13416) 71033
13415 70641
13416 71033
13417 71459
Administrative Orders:
Presidential Determinations:
No. 2007–4 of November 22, 2006 74451
No. 2007–5 of November 27, 2006 74453

5 CFR

Proposed Rules:
3201 70325

7 CFR

33 70643
249 74618
457 74455
981 70646
1220 69429
1792 70275
Proposed Rules:
51 69497
272 71075
273 71075
319 70330
981 70683

8 CFR

1003 70855

9 CFR

Proposed Rules:
78 74826
93 74827

10 CFR

70 69430
72 71463
430 71340
431 71340
433 70275
434 70275
435 70275
600 70457
606 70457
Proposed Rules:
20 74847
54 74848

11 CFR

Proposed Rules:
104 71084
111 .....71088, 71090, 71093

12 CFR

205 69430
215 71472
1750 75085
Proposed Rules:
205 69500
Ch. III 74857

14 CFR

13 70460
23 74456
25 .....70646, 74755, 74758
39 .....70284, 70286, 70294, 70297, 70300, 70648, 70857, 70860, 70862, 70865, 70868, 71475, 71478, 71480, 74459,74462,74464,74466, 75106, 75108
71 .....69438, 70302, 70465, 70650, 74761, 75110
73 70466
97 .....69438, 74762, 74764
Proposed Rules:
39 .....70908, 71096, 71099, 71101, 71103, 71492, 71494, 71497, 71499, 74873, 74878, 75145
71 .....70909, 70911
145 70254
399 71106

16 CFR

Proposed Rules:
Ch. II 74472

17 CFR

200 71037
232 74698
239 74698
240 74698
249 74698
249b 74698
269 74698
274 74698
Proposed Rules:
240 .....71109, 75068
242 .....75002, 75068

18 CFR

50 69440
380 69440
Proposed Rules:
2 70692
33 70692
40 70695

365 70692
366 70692

19 CFR

12 69447
Proposed Rules:
210 71113

21 CFR

2 70870
25 74766
80 70873
101 74785
500 74766
514 74766
520 ....70302, 71038
558 ....70304, 74466, 74766
1301 69478
Proposed Rules:
2 70912
201 74474
312 ....75147, 75168
1312 69504

22 CFR

Proposed Rules:
22 74880
51 74880

23 CFR

655 75111

25 CFR

Proposed Rules:
292 70335
502 71115
546 71115
547 71115

26 CFR

1 ....70875, 70877, 71039, 71040, 71045, 74467
54 75014
301 71040
602 ....71039, 71040, 71045
Proposed Rules:
1 ....71116, 71241, 74482
301 70335

27 CFR

Proposed Rules:
9 70472
40 70476
41 70476
44 70476
45 70476

28 CFR

61 71047
Proposed Rules:
570 70696

29 CFR

54 75055
2590 75014
4022 69480
4044 69481
4050 75115
4281 75115
Proposed Rules:
102 74881
825 69504
4050 75181
4281 75181

30 CFR

3 71430
48 71430
50 71430
75 71430

31 CFR

1 69482
Proposed Rules:
538 71500
560 71500

32 CFR

626 71051
627 71051
656 71051

33 CFR

117 ....70305, 70467, 70468, 70877
165 ....69484, 71483
Proposed Rules:
165 ....69514, 69517
401 70336

34 CFR

Proposed Rules:
674 71117
682 71117
685 71117

37 CFR

253 69486

40 CFR

51 74792
52 ....69486, 70312, 70315, 70468, 70880, 70883, 71486, 71489
60 75117
62 75117
63 70651
70 ....70468, 70665
81 71489
82 75386
96 74792
97 74792
122 69622
180 ....70667, 70670, 71052, 74795, 74802
239 71241
258 71241
300 70318
799 71058
Proposed Rules:
52 ....69519, 70338, 70339, 70476, 70699, 70914, 70915
63 75182
69 74886
70 ....70476, 70702
81 70915
180 70703

42 CFR

405 ....69624, 71062
410 ....69624, 71062
411 ....69624, 71062
414 ....69624, 71062
415 ....69624, 71062
424 ....69624, 71062
460 71244
462 71244
466 71244
473 71244
476 71244
482 71378
Proposed Rules:
1001 71501

44 CFR

65 70885
67 ....70894, 70904
Proposed Rules:
67 70930

45 CFR

146 75014

47 CFR

2 70671
27 70906
64 ....74469, 74819, 75122
87 70671
97 74823
Proposed Rules:
Ch. I 70709
2 70710
87 70710

48 CFR

Ch. I 74656, 74680
2 74667
10 74667
12 74667
16 ....74656, 74667
32 74656
52 ....74656, 74667
201 69488
208 69489
212 ....69489, 71072
215 69492
216 74469
222 71072
230 69492
232 69489
252 ....69489, 69492, 71072, 74469
253 69492
1802 71072
1805 71072
1819 71072
1825 71072
1827 71072
1828 71072
1852 71072
Proposed Rules:
23 70937
32 75186
36 70937
52 ....70937, 75186
719 70939

49 CFR

571 74823
572 ....75304, 75342
Proposed Rules:
171 69527
172 69527
173 69527
174 69527
178 69527
213 70590
214 70590
215 70590
217 70590
218 70590
219 70590
220 70590
221 70590
222 70590
223 70590
224 70590
225 70590
228 70590
229 70590
230 70590
231 70590
232 70590
233 70590
234 70590
235 70590
236 70590
238 70590
239 70590
240 70590
241 70590
571 70477

50 CFR

17 74592
229 ....70319, 70321
622 70680
635 75122
648 ....70682, 70906, 71073, 74471, 75134
665 69495
679 70323
Proposed Rules:
10 75188
17 ....70479, 70483, 70715, 70717, 75189, 75215
22 74483
92 75060
229 70339
622 ....70492, 75220
648 ....70493, 75226
660 ....70939, 70941
665 69527
679 70943

REMINDERS

The items in this list were editorially compiled as an aid to Federal Register users. Inclusion or exclusion from this list has no legal significance.

RULES GOING INTO EFFECT DECEMBER 14, 2006

ENVIRONMENTAL PROTECTION AGENCY

Air pollution; standards of performance for new stationary sources:

Electric utility steam generating units; nonsubmission of Clean Air Mercury Rule State plans; published 12-14-06

Air programs:

Stratospheric ozone protection—

Methyl bromide; 2007 critical use exemption from phaseout; published 12-14-06

FEDERAL COMMUNICATIONS COMMISSION

Common carrier services:

Telephone Consumer Protection Act; implementation—

Junk Fax Prevention Act; unwanted telephone solicitations; published 12-14-06

HOUSING AND URBAN DEVELOPMENT DEPARTMENT

Federal Housing Enterprise Oversight Office

Risk-based capital:

Test methodology and specifications; technical amendments; published 12-14-06

INTERIOR DEPARTMENT

Fish and Wildlife Service

Endangered and threatened species:

Critical habitat designations—

Braunton's milk vetch and Lyon's pentachaeta; published 11-14-06

TRANSPORTATION DEPARTMENT

Federal Aviation Administration

Airworthiness directives:

Air Tractor, Inc.; published 11-9-06

Air Tractor, Inc.; correction; published 11-29-06

B-N Group Ltd.; published 11-9-06

COMMENTS DUE NEXT WEEK

COMMERCE DEPARTMENT

National Oceanic and Atmospheric Administration

Fishery conservation and management:

Alaska; fisheries of Exclusive Economic Zone—

Pacific halibut and sablefish; comments due by 12-18-06; published 11-1-06 [FR 06-09009]

ENERGY DEPARTMENT

Federal Energy Regulatory Commission

Natural gas companies (Federal Power Act):

Business practice standards and communication protocols for public utilities; comments due by 12-18-06; published 11-3-06 [FR E6-18336]

ENVIRONMENTAL PROTECTION AGENCY

Air pollution; standards of performance for new stationary sources:

Industrial-commercial-institutional steam generating units; comments due by 12-18-06; published 11-16-06 [FR E6-19386]

Air quality implementation plans; approval and promulgation; various States:

Louisiana; comments due by 12-21-06; published 11-21-06 [FR E6-19642]

Pesticides; tolerances in food, animal feeds, and raw agricultural commodities:

Flumioxazin; comments due by 12-18-06; published 10-18-06 [FR E6-17138]

Novaluron; comments due by 12-19-06; published 10-20-06 [FR E6-17566]

Solid wastes:

State municipal solid waste landfill permit programs—

Missouri; comments due by 12-18-06; published 11-16-06 [FR E6-19383]

Missouri; comments due by 12-18-06; published 11-16-06 [FR E6-19384]

Nebraska; comments due by 12-18-06; published 11-16-06 [FR E6-19387]

Nebraska; comments due by 12-18-06; published 11-16-06 [FR E6-19388]

Toxic substances:

Hazardous substances priority list; chemical testing requirements; comments due by 12-19-06; published 10-20-06 [FR E6-17569]

FEDERAL TRADE COMMISSION

Telemarketing sales rules:

Prerecorded telemarketing calls, etc.; seller and telemarketer compliance; comments due by 12-18-06; published 11-9-06 [FR E6-19012]

HEALTH AND HUMAN SERVICES DEPARTMENT

Centers for Medicare & Medicaid Services

Medicare:

Part D prescription drugs; data collection; comments due by 12-18-06; published 10-18-06 [FR 06-08750]

HEALTH AND HUMAN SERVICES DEPARTMENT

Food and Drug Administration

Animal drugs, feeds, and related products:

Minor Use and Minor Species Act of 2004; implementation—

Legally marketed unapproved drugs for minor species; index; comments due by 12-20-06; published 8-22-06 [FR 06-07070]

Legally marketed unapproved drugs for minor species; index; comments due by 12-20-06; published 10-2-06 [FR E6-16208]

HOMELAND SECURITY DEPARTMENT

Customs and Border Protection Bureau

Merchandise, special classes:

Canada; softwood lumber products; special entry requirements; comments due by 12-18-06; published 10-18-06 [FR 06-08761]

HOMELAND SECURITY DEPARTMENT

Coast Guard

Anchorage regulations:

New York; comments due by 12-18-06; published 11-16-06 [FR E6-19314]

Drawbridge operations:

Iowa and Illinois; comments due by 12-18-06; published 11-16-06 [FR E6-19311]

Ports and waterways safety; regulated navigation areas, safety zones, security zones, etc.:

San Carlos Bay, FL; comments due by 12-21-06; published 11-21-06 [FR E6-19680]

HOUSING AND URBAN DEVELOPMENT DEPARTMENT

Public and Indian housing:

Indian Housing Block Grant Program; minimum funding extension; comments due by 12-18-06; published 10-19-06 [FR E6-17518]

INTERIOR DEPARTMENT

Indian Affairs Bureau

Economic enterprises:

Gaming on trust lands acquired after October 1988; determination procedures

Correction; comments due by 12-19-06; published 12-4-06 [FR E6-20494]

INTERIOR DEPARTMENT

Fish and Wildlife Service

Endangered and threatened species:

Critical habitat designations—

Suisun thistle and soft bird's-beak; comments due by 12-20-06; published 4-11-06 [FR 06-03343]

Suisun thistle and soft bird's-beak; comments due by 12-20-06; published 11-20-06 [FR E6-19572]

Yadon's piperia; comments due by 12-18-06; published 10-18-06 [FR 06-08600]

JUSTICE DEPARTMENT

Drug Enforcement Administration

Controlled substances; importation and exportation:

Reexportation; comments due by 12-18-06; published 10-18-06 [FR E6-17275]

LABOR DEPARTMENT

Employment and Training Administration

Trade Adjustment Assistance Program:

Alternative trade adjustment assistance for older workers; comments due by 12-18-06; published 10-18-06 [FR 06-08752]

LEGAL SERVICES CORPORATION

Client grievance procedures; comments due by 12-22-06;

published 8-21-06 [FR E6-13700]

LIBRARY OF CONGRESS

Copyright Office, Library of Congress

Copyright office and procedures:

Retransmission of digital broadcast signals pursuant to the cable statutory license; comments due by 12-18-06; published 11-22-06 [FR E6-19794]

NATIONAL TRANSPORTATION SAFETY BOARD

Practice and procedure:

Public availability of information; comments due by 12-22-06; published 11-22-06 [FR 06-09289]

NUCLEAR REGULATORY COMMISSION

Production and utilization facilities; domestic licensing:

Fuel within dry storage casks or transportation packages in spent fuel pool; criticality control; comments due by 12-18-06; published 11-16-06 [FR E6-19372]

PEACE CORPS

Governmentwide debarment and suspension (nonprocurement); Federal agency guidance; comments due by 12-22-06; published 11-22-06 [FR 06-09369]

SECURITIES AND EXCHANGE COMMISSION

Securities:

Covered securities; designation of certain securities listed on NASDAQ Stock Market LLC; comments due by 12-22-06; published 11-22-06 [FR E6-19740]

STATE DEPARTMENT

Passports:

Card format passport; fee schedule changes; comments due by 12-18-06; published 10-17-06 [FR E6-17237]

TRANSPORTATION DEPARTMENT

Federal Aviation Administration

Airworthiness directives:

Airbus; comments due by 12-18-06; published 10-19-06 [FR E6-17426]

Boeing; comments due by 12-18-06; published 10-19-06 [FR E6-17428]

Bombardier; comments due by 12-20-06; published 11-20-06 [FR E6-19539]

EADS SOCATA; comments due by 12-18-06; published 11-17-06 [FR E6-19443]

Empresa Brasileira de Aeronautica S.A. (EMBRAER); comments due by 12-20-06; published 11-20-06 [FR E6-19532]

EXTRA Flugzeugproducktions-und Vertriebs GmbH; comments due by 12-22-06; published 11-22-06 [FR E6-19762]

Fokker; comments due by 12-20-06; published 11-20-06 [FR E6-19538]

MD Helicopters, Inc.; comments due by 12-18-06; published 10-17-06 [FR E6-17186]

Raytheon; comments due by 12-18-06; published 10-17-06 [FR E6-17188]

SOCATA - Groupe AEROSPATIALE; comments due by 12-22-06; published 11-22-06 [FR E6-19801]

Turbomeca; comments due by 12-18-06; published 10-19-06 [FR E6-17328]

Airworthiness standards:

Special conditions—

General Electric Co. GEnx turbofan engine models; comments due by 12-18-06; published 11-17-06 [FR 06-09230]

Class D airspace; comments due by 12-18-06; published 11-17-06 [FR 06-09248]

Class E airspace; comments due by 12-18-06; published 11-17-06 [FR 06-09246]

TRANSPORTATION DEPARTMENT

Pipeline and Hazardous Materials Safety Administration

Hazardous materials:

Security plan requirements; public meeting; comments due by 12-20-06; published 9-21-06 [FR 06-07930]

TREASURY DEPARTMENT

Internal Revenue Service

Income taxes:

Elimination of country-by-country reporting to shareholders of foreign taxes paid by regulated investment companies; comments due by 12-18-06; published 9-18-06 [FR 06-07731]

LIST OF PUBLIC LAWS

This is a continuing list of public bills from the current session of Congress which have become Federal laws. It may be used in conjunction with "P L U S" (Public Laws Update Service) on 202–741–6043. This list is also available online at *http://www.archives.gov/federal-register/laws.html*.

The text of laws is not published in the **Federal Register** but may be ordered in "slip law" (individual pamphlet) form from the Superintendent of Documents, U.S. Government Printing Office, Washington, DC 20402 (phone, 202–512–1808). The text will also be made available on the Internet from GPO Access at *http://www.gpoaccess.gov/plaws/index.html*. Some laws may not yet be available.

H.R. 2383/P.L. 109–384

To redesignate the facility of the Bureau of Reclamation located at 19550 Kelso Road in Byron, California, as the "C.W. 'Bill' Jones Pumping Plant". (Dec. 12, 2006; 120 Stat. 2680)

H.R. 3817/P.L. 109–385

Valle Vidal Protection Act of 2005 (Dec. 12, 2006; 120 Stat. 2681)

H.R. 4000/P.L. 109–386

To authorize the Secretary of the Interior to revise certain repayment contracts with the Bostwick Irrigation District in Nebraska, the Kansas Bostwick Irrigation District No. 2, the Frenchman-Cambridge Irrigation District, and the Webster Irrigation District No. 4, all a part of the Pick-Sloan Missouri Basin Program, and for other purposes. (Dec. 12, 2006; 120 Stat. 2683)

H.R. 4559/P.L. 109–387

To provide for the conveyance of certain National Forest System land to the towns of Laona and Wabeno, Wisconsin, and for other purposes. (Dec. 12, 2006; 120 Stat. 2685)

H.R. 5061/P.L. 109–388

Paint Bank and Wytheville National Fish Hatcheries Conveyance Act (Dec. 12, 2006; 120 Stat. 2688)

H.R. 5103/P.L. 109–389

To provide for the conveyance of the former Konnarock Lutheran Girls School in Smyth County, Virginia, which is currently owned by the United States and administered by the Forest Service, to facilitate the restoration and reuse of the property, and for other purposes. (Dec. 12, 2006; 120 Stat. 2690)

H.R. 5585/P.L. 109–390

Financial Netting Improvements Act of 2006 (Dec. 12, 2006; 120 Stat. 2692)

H.R. 5690/P.L. 109–391

Ouachita National Forest Boundary Adjustment Act of 2006 (Dec. 12, 2006; 120 Stat. 2701)

H.R. 6121/P.L. 109–392

To amend the Federal Water Pollution Control Act to reauthorize a program relating to the Lake Pontchartrain Basin, and for other purposes. (Dec. 12, 2006; 120 Stat. 2703)

H.R. 4377/P.L. 109–393

To extend the time required for construction of a hydroelectric project, and for other purposes. (Dec. 13, 2006; 120 Stat. 2704)

Last List December 12, 2006

Public Laws Electronic Notification Service (PENS)

PENS is a free electronic mail notification service of newly enacted public laws. To subscribe, go to *http://listserv.gsa.gov/archives/publaws-l.html*

Note: This service is strictly for E-mail notification of new laws. The text of laws is not available through this service. **PENS** cannot respond to specific inquiries sent to this address.

Contents

Federal Register

Vol. 71, No. 239

Wednesday, December 13, 2006

Editorial Note: In the **Federal Register** of Wednesday, December 13, 2006, all page numbers for the documents entries printed in the Table of Contents were inadvertently replaced with **Federal Register** document numbers. A corrected Table of Contents for that issue appears as follows:

Agriculture Department
See Animal and Plant Health Inspection Service
See Forest Service

Animal and Plant Health Inspection Service
PROPOSED RULES
Exportation and importation of animals and animal products:
Horse quarantine facilities, permanent, privately owned; standards, 74827–74847
Interstate transportation of animals and animal products (quarantine):
Brucellosis in cattle; research facilities, 74826–74827

Arts and Humanities, National Foundation
See National Foundation on the Arts and the Humanities

Centers for Disease Control and Prevention
NOTICES
Agency information collection activities; proposals, submissions, and approvals, 74914–74915
Meetings:
Advisory Committee to Director, 74915

Centers for Medicare & Medicaid Services
RULES
Group health plans; access, portability, and renewability requirements:
Nondiscrimination in health coverage in group market, 75014–75055
NOTICES
Privacy Act; system of records, 74915–74923

Children and Families Administration
NOTICES
Agency information collection activities; proposals, submissions, and approvals, 74923–74924

Coast Guard
NOTICES
Committees; establishment, renewal, termination, etc.:
Houston-Galveston Area Maritime Security Committee, 74928

Commerce Department
See International Trade Administration

Employee Benefits Security Administration
RULES
Group health plans; access, portability, and renewability requirements:
Nondiscrimination in health coverage in group market, 75014–75055

Environmental Protection Agency
RULES
Air quality implementation plans:
Preparation, adoption, and submittal—
Clean Air Interstate Rule; Federal implementation plans; correction, 74792–74795
Pesticides; tolerances in food, animal feeds, and raw agricultural commodities:
Clothianidin, 74795–74802
Nomenclature changes; technical amendment, 74802–74819
PROPOSED RULES
Air programs:
Clean Air Act—
Virgin Islands Water and Power Authority; exemption, 74886–74895
NOTICES
Meetings:
FIFRA Scientific Advisory Panel, 74901–74904
Pesticide registration, cancellation, etc.:
Ethyl Parathion, 74904–74905
Lindane, 74905–74907
Water pollution control:
Total maximum daily loads—
Arkansas, 74907

Federal Aviation Administration
RULES
Airworthiness standards:
Special conditions—
Airbus Model A380-800 airplane, 74755–74761
Class D airspace
Correction, 74761–74762
Standard instrument approach procedures, 74762–74766
PROPOSED RULES
Airworthiness directives:
General Electric Co., 74873–74878
MT-Propeller Entwicklung GmbH, 74878–74880

Federal Communications Commission
RULES
Common carrier services:
Local and interexchange carriers; minimum customer account record exchange obligations; implementation, 74819–74823
Radio services, special:
Amateur service—
Miscellaneous amendments, 74823
NOTICES
Agency information collection activities; proposals, submissions, and approvals, 74907–74912

Federal Deposit Insurance Corporation
PROPOSED RULES
Deposit insurance coverage; large-bank deposit insurance determination modernization proposal, 74857–74873

Federal Highway Administration
NOTICES
Highway planning and construction; licenses, permits, approvals, etc.:
Texas; State Highway 130 project, 74985–74986

Federal Maritime Commission
NOTICES
Agreements filed, etc., 74912
Ocean transportation intermediary licenses:
Transmodal Logistics International Inc., et al., 74912–74913
Zenus (USA) Logistics LLC et al.; correction, 74913

Federal Motor Carrier Safety Administration
NOTICES
Motor carrier safety standards:
Driver qualifications; diabetes exemptions, 74986–74993

Federal Reserve System
NOTICES
Banks and bank holding companies:
Change in bank control, 74913

Federal Trade Commission
NOTICES
Fair Credit Reporting Act:
Disclosure charges, 74913–74914

Fish and Wildlife Service
PROPOSED RULES
Migratory bird hunting:
Alaska; 2007 subsistence harvest regulations, 75060–75066
NOTICES
Comprehensive conservation plans; availability, etc.:
Hanford Reach National Monument, WA, 74929–74931
Lacreek National Wildlife Refuge and Wetland Management District, SD, 74931–74932

Food and Drug Administration
RULES
Animal drugs, feeds, and related products:
Approved and abbreviated new drug applications; supplements and other changes, 74766–74785
Food for human consumption:
Food labeling—
Dietary supplements; nutrition labeling on 'per day' basis, 74785–74792
NOTICES
Agency information collection activities; proposals, submissions, and approvals, 74924–74927
Meetings:
FDA clinical trial requirements; industry exchange and public workshops, 74927–74928

Foreign Assets Control Office
NOTICES
Sanctions; blocked persons, specially designated nationals, terrorists, narcotics traffickers, and foreign terrorist organizations:
Additional designations of terrorism-related blocked persons and entities, 74998–74999

Forest Service
NOTICES
Meetings:
Resource Advisory Committees—
Modoc, 74896
Tehama County, 74896
National Forest System lands:
Alaska National Forests, AK; outfitting and guiding activities; flat fee policy, 74896

Health and Human Services Department
See Centers for Disease Control and Prevention
See Centers for Medicare & Medicaid Services
See Children and Families Administration
See Food and Drug Administration
NOTICES
Reports and guidance documents; availability, etc.:
Personalized health care improvement through information technology and genomic information in population- and community-based health care delivery systems, 74914

Homeland Security Department
See Coast Guard

Indian Affairs Bureau
NOTICES
Agency information collection activities; proposals, submissions, and approvals, 74932–74933
Land acquisitions into trust:
Jicarilla Apache Tribe of New Mexico, 74933–74937

Interior Department
See Fish and Wildlife Service
See Indian Affairs Bureau
See Land Management Bureau
See Minerals Management Service
NOTICES
Agency information collection activities; proposals, submissions, and approvals, 74928–74929

Internal Revenue Service
RULES
Excise taxes:
Group health plans; access, portability, and renewability requirements—
Nondiscrimination in health coverage in group market, 75014–75055
Pension excise taxes—
Grandfathered church plans; exception to nondiscrimination requirements, 75055–75057

International Trade Administration
NOTICES
Antidumping:
Magnesium metal from—
Russian Federation, 74897
Stainless steel sheet and strip in coils from—
Germany, 74897–74900
Steel concrete reinforcing bars from—
Latvia, 74900–74901

Labor Department
See Employee Benefits Security Administration

Land Management Bureau
NOTICES
Alaska Native claims selection:
Kuskokwim Corp., 74937

Minerals Management Service
NOTICES
Agency information collection activities; proposals, submissions, and approvals, 74937–74941

National Foundation on the Arts and the Humanities
NOTICES
Meetings:
Arts Advisory Panel, 74941

National Highway Traffic Safety Administration
RULES
Motor vehicle safety standards:
Brake hoses; effective date delay, 74823–74825
NOTICES
Motor vehicle safety standards; exemption petitions, etc.:
Braun Corp., 74993–74994
Hankook Tire Co., Ltd., 74995–74996
Maxonlift Corp., 74996
U.S. Bus Corp., 74996–74997

National Labor Relations Board
PROPOSED RULES
Privacy Act; implementation, 74881–74886
NOTICES
Privacy Act; system of records, 74941–74958

Nuclear Regulatory Commission
PROPOSED RULES
Radiation protection standards:
Radiological criteria for license termination; funding shortfalls for facility decommissioning; meeting, 74847–74848
Rulemaking petitions:
Spano, Andrew J., et al.; denied, 74848–74857
NOTICES
Committees; establishment, renewal, termination, etc.:
Licensing Support Network Advisory Review Panel, 74959
Reports and guidance documents; availability, etc.:
Spent fuel storage and transportation casks; damaged fuel definition, 74959–74960
Applications, hearings, determinations, etc.:
Nuclear Management Co., LLC, 74958–74959

Nuclear Waste Technical Review Board
NOTICES
Meetings:
Yucca Mountain, NV—
Repository development; technical and scientific issues, 74960

Overseas Private Investment Corporation
NOTICES
Agency information collection activities; proposals, submissions, and approvals, 74960–74961

Pipeline and Hazardous Materials Safety Administration
NOTICES
Hazardous materials:
Special permit applications delayed; list, 74997–74998

Securities and Exchange Commission
PROPOSED RULES
Securities:
Securities futures; short selling In connection with public offering, 75002–75011
Short sale price test; amendments, 75068–75082
NOTICES
Investment Company Act of 1940:
Mexico Equity & Income Fund, Inc., 74961–74962
Self-regulatory organizations; proposed rule changes:
American Stock Exchange LLC, 74962–74965
Boston Stock Exchange, Inc., 74965–74966
Chicago Board Options Exchange, Inc., 74966–74969
International Securities Exchange, LLC, 74969–74970
National Association of Securities Dealers, Inc., 74970–74971
New York Stock Exchange LLC, 74972–74974
NYSE Arca, Inc., 74974
Options Clearing Corp., 74974–74975
Philadelphia Stock Exchange, Inc., 74975–74982

Small Business Administration
NOTICES
Agency information collection activities; proposals, submissions, and approvals, 74982
Loan programs:
CommunityExpress Pilot Program; extension, 74982

State Department
PROPOSED RULES
Passports:
Card format passport; fee schedule changes, 74880
NOTICES
Culturally significant objects imported for exhibition:
Jeff Wall, 74982–74983
Matisse: Painter as Sculptor, 74983
Temptations of Flora: Jan van Huysum (1682-1749), 74983

Surface Transportation Board
NOTICES
Railroad operation, acquisition, construction, etc.:
BNSF Railway Co., 74998

Transportation Department
See Federal Aviation Administration
See Federal Highway Administration
See Federal Motor Carrier Safety Administration
See National Highway Traffic Safety Administration
See Pipeline and Hazardous Materials Safety Administration
See Surface Transportation Board
NOTICES
Aviation proceedings:
Agreements filed; weekly receipts, 74983–74984
Certificates of public convenience and necessity and foreign air carrier permits; weekly applications, 74984–74985

Treasury Department
See Foreign Assets Control Office
See Internal Revenue Service
NOTICES
Agency information collection activities; proposals, submissions, and approvals, 74998

Separate Parts In This Issue

Part II
Securities and Exchange Commission, 75002–75011

Part III
Health and Human Services Department, Centers for Medicare & Medicaid Services; Labor Department, Employee Benefits Security Administration; Treasury Department, Internal Revenue Service, 75014–75055
Treasury Department, Internal Revenue Service, 75055–75057

Part IV
Interior Department, Fish and Wildlife Service, 75060–75066

Part V
Securities and Exchange Commission, 75068–75082

Reader Aids
Consult the Reader Aids section at the end of this issue for phone numbers, online resources, finding aids, reminders, and notice of recently enacted public laws.

To subscribe to the Federal Register Table of Contents LISTSERV electronic mailing list, go to http://listserv.access.gpo.gov and select Online mailing list archives, FEDREGTOC-L, Join or leave the list (or change settings); then follow the instructions.