Federal Register

3–5–07 Monday
Vol. 72 No. 42 Mar. 5, 2007

Pages 9651–9840

The **FEDERAL REGISTER** (ISSN 0097–6326) is published daily, Monday through Friday, except official holidays, by the Office of the Federal Register, National Archives and Records Administration, Washington, DC 20408, under the Federal Register Act (44 U.S.C. Ch. 15) and the regulations of the Administrative Committee of the Federal Register (1 CFR Ch. I). The Superintendent of Documents, U.S. Government Printing Office, Washington, DC 20402 is the exclusive distributor of the official edition. Periodicals postage is paid at Washington, DC.

The **FEDERAL REGISTER** provides a uniform system for making available to the public regulations and legal notices issued by Federal agencies. These include Presidential proclamations and Executive Orders, Federal agency documents having general applicability and legal effect, documents required to be published by act of Congress, and other Federal agency documents of public interest.

Documents are on file for public inspection in the Office of the Federal Register the day before they are published, unless the issuing agency requests earlier filing. For a list of documents currently on file for public inspection, see *www.archives.gov.*

**The seal of the National Archives and Records Administration authenticates the Federal Register** as the official serial publication established under the Federal Register Act. Under 44 U.S.C. 1507, the contents of the **Federal Register** shall be judicially noticed.

The **Federal Register** is published in paper and on 24x microfiche. It is also available online at no charge as one of the databases on GPO Access, a service of the U.S. Government Printing Office.

The online edition of the **Federal Register** *www.gpoaccess.gov/nara,* available through GPO Access, is issued under the authority of the Administrative Committee of the Federal Register as the official legal equivalent of the paper and microfiche editions (44 U.S.C. 4101 and 1 CFR 5.10). It is updated by 6 a.m. each day the **Federal Register** is published and includes both text and graphics from Volume 59, Number 1 (January 2, 1994) forward.

For more information about GPO Access, contact the GPO Access User Support Team, call toll free 1-888-293-6498; DC area 202-512-1530; fax at 202-512-1262; or via e-mail at *gpoaccess@gpo.gov.* The Support Team is available between 7:00 a.m. and 9:00 p.m. Eastern Time, Monday–Friday, except official holidays.

The annual subscription price for the **Federal Register** paper edition is $749 plus postage, or $808, plus postage, for a combined **Federal Register, Federal Register** Index and List of CFR Sections Affected (LSA) subscription; the microfiche edition of the **Federal Register** including the **Federal Register** Index and LSA is $165, plus postage. Six month subscriptions are available for one-half the annual rate. The prevailing postal rates will be applied to orders according to the delivery method requested. The price of a single copy of the daily **Federal Register,** including postage, is based on the number of pages: $11 for an issue containing less than 200 pages; $22 for an issue containing 200 to 400 pages; and $33 for an issue containing more than 400 pages. Single issues of the microfiche edition may be purchased for $3 per copy, including postage. Remit check or money order, made payable to the Superintendent of Documents, or charge to your GPO Deposit Account, VISA, MasterCard, American Express, or Discover. Mail to: New Orders, Superintendent of Documents, P.O. Box 371954, Pittsburgh, PA 15250-7954; or call toll free 1-866-512-1800, DC area 202-512-1800; or go to the U.S. Government Online Bookstore site, see *bookstore.gpo.gov.*

There are no restrictions on the republication of material appearing in the **Federal Register.**

**How To Cite This Publication:** Use the volume number and the page number. Example: 72 FR 12345.

**Postmaster:** Send address changes to the Superintendent of Documents, Federal Register, U.S. Government Printing Office, Washington DC 20402, along with the entire mailing label from the last issue received.

## SUBSCRIPTIONS AND COPIES

**PUBLIC**

**Subscriptions:**

| | |
|---|---|
| Paper or fiche | **202–512–1800** |
| Assistance with public subscriptions | **202–512–1806** |
| **General online information** | **202–512–1530; 1–888–293–6498** |

**Single copies/back copies:**

| | |
|---|---|
| Paper or fiche | **202–512–1800** |
| Assistance with public single copies | **1–866–512–1800 (Toll-Free)** |

**FEDERAL AGENCIES**

**Subscriptions:**

| | |
|---|---|
| Paper or fiche | **202–741–6005** |
| Assistance with Federal agency subscriptions | **202–741–6005** |

**FEDERAL REGISTER WORKSHOP**

**THE FEDERAL REGISTER: WHAT IT IS AND HOW TO USE IT**

FOR: Any person who uses the Federal Register and Code of Federal Regulations.

WHO: Sponsored by the Office of the Federal Register.

WHAT: Free public briefings (approximately 3 hours) to present:

1. The regulatory process, with a focus on the Federal Register system and the public's role in the development of regulations.

2. The relationship between the Federal Register and Code of Federal Regulations.

3. The important elements of typical Federal Register documents.

4. An introduction to the finding aids of the FR/CFR system.

WHY: To provide the public with access to information necessary to research Federal agency regulations which directly affect them. There will be no discussion of specific agency regulations.

WHEN: Tuesday, March 13, 2007
9:00 a.m.–Noon

WHERE: Office of the Federal Register
Conference Room, Suite 700
800 North Capitol Street, NW.
Washington, DC 20002

RESERVATIONS: (202) 741–6008

Printed on recycled paper.

# Contents

**Federal Register**

Vol. 72, No. 42

Monday, March 5, 2007

**Agency for Healthcare Research and Quality**
NOTICES
Meetings:
Health Care Policy and Research Special Emphasis Panel, 9762–9763

**Agriculture Department**
*See* Food Safety and Inspection Service
*See* Forest Service

**Air Force Department**
NOTICES
Meetings:
United Launch Alliance Industry Day, 9738–9739

**Chemical Safety and Hazard Investigation Board**
NOTICES
Meetings; Sunshine Act, 9726

**Commerce Department**
*See* Industry and Security Bureau
*See* International Trade Administration
*See* National Oceanic and Atmospheric Administration
NOTICES
Agency information collection activities; proposals, submissions, and approvals, 9726–9728

**Defense Department**
*See* Air Force Department
NOTICES
Federal Acquisition Regulation (FAR):
Agency information collection activities; proposals, submissions, and approvals, 9738

**Disability Employment Policy Office**
NOTICES
Agency information collection activities; proposals, submissions, and approvals, 9779–9780

**Education Department**
NOTICES
Grants and cooperative agreements; availability, etc.:
Special education and rehabilitative services—
Personnel Development to Improve Services and Results for Children with Disabilities Program, 9739–9744

**Employment and Training Administration**
NOTICES
Grants and cooperative agreements; availability, etc.:
Rural Industrialization Loan and Grant Program; compliance certification requests, 9780–9781

**Environmental Protection Agency**
RULES
Pesticides; tolerances in food, animal feeds, and raw agricultural commodities:
2-propenoic acid, methyl ester, polymer with ethenyl acetate, hydrolyzed, sodium salts
Correction, 9834
PROPOSED RULES
Air pollutants, hazardous; national emission standards:
General provisions, 9718–9719
NOTICES
Air pollution control:
Citizen suits; proposed settlements—
Center for Biological Diversity et al., 9744–9745

**Export-Import Bank**
NOTICES
Meetings; Sunshine Act, 9745

**Federal Aviation Administration**
RULES
Airworthiness directives:
Airbus, 9658–9660
Alpha Aviation Design Ltd., 9657–9658
Bombardier, 9666–9674
General Electric Co., 9662–9666
McDonnell Douglas, 9652–9655
Mooney Airplance Co., Inc., 9660–9662
SOCATA - Groupe AEROSPATIALE, 9655–9657

**Federal Communications Commission**
NOTICES
Common carrier services:
Wireless telecommunications services—
Broadband PCS spectrum auction; notice of filing requirements, etc., 9745–9762

**Federal Election Commission**
NOTICES
Meetings; Sunshine Act, 9762

**Federal Emergency Management Agency**
RULES
Flood determination elevations:
Kentucky; withdrawn, 9675–9676

**Federal Railroad Administration**
NOTICES
Exemption petitions, etc.:
Maine Narrow Gage Railroad & Museum, 9831–9832
Union Pacific Road Co., 9831

**Federal Reserve System**
NOTICES
Banks and bank holding companies:
Formations, acquisitions, and mergers, 9762

**Fish and Wildlife Service**
NOTICES
Endangered and threatened species:
Incidental take permits—
Bastrop County, TX; Houston toad, 9771–9772
Williamson County, TX; golden-cheeked warbler, 9771
Endangered and threatened species permit applications, 9770–9771

**Food and Drug Administration**
RULES
Organizations, functions, and authority delegations:
Pharmaceutical Science Advisory Committee; name and function change, 9674–9675

NOTICES
Human drugs:
Drug products withdrawn from sale for reasons other than safety or effectiveness—
LAMICTAL (lamotrigene) Tablets, 50 and 250 milligrams, 9763–9764
Meetings:
Anti-Infective Drugs Advisory Committee et al., 9764
Arthritis Advisory Committee, 9764–9765
Cardiovascular and Renal Drugs Advisory Committee, 9765–9766
Cellular, Tissue and Gene Therapies Advisory Committee, 9766
Pharmaceutical Science and Clinical Pharmacology Advisory Committee, 9767

**Food Safety and Inspection Service**
RULES
Meat and poultry inspection:
Food labeling—
Uniform compliance dates, 9651–9652

**Forest Service**
NOTICES
Agency information collection activities; proposals, submissions, and approvals, 9725
Environmental statements; notice of intent:
Bridger-Teton National Forest, WY, 9725–9726

**General Services Administration**
NOTICES
Federal Acquisition Regulation (FAR):
Agency information collection activities; proposals, submissions, and approvals, 9738

**Health and Human Services Department**
*See* Agency for Healthcare Research and Quality
*See* Food and Drug Administration
*See* Substance Abuse and Mental Health Services Administration
NOTICES
Meetings:
American Health Information Community, 9762

**Homeland Security Department**
*See* Federal Emergency Management Agency
*See* U.S. Citizenship and Immigration Services

**Indian Affairs Bureau**
RULES
Tribal government:
Indian rolls preparation—
Western Shoshone, 9836–9840
NOTICES
Land acquisitions into trust:
Cherokee Nation of Oklahoma, 9773

**Industry and Security Bureau**
NOTICES
Agency information collection activities; proposals, submissions, and approvals, 9728–9729

**Interior Department**
*See* Fish and Wildlife Service
*See* Indian Affairs Bureau
*See* National Park Service
*See* Reclamation Bureau
NOTICES
Watches and watch movements; allocation of duty-exemptions:
Virgin Islands, 9733

**Internal Revenue Service**
PROPOSED RULES
Procedure and administration:
Agreements for tax liability installment payments; withdrawn, 9712–9716
NOTICES
Meetings:
Taxpayer Advocacy Panels, 9832–9833

**International Trade Administration**
NOTICES
Antidumping:
Chlorinated isocyanurates from—
China, 9729
Furfuryl alcohol from—
Thailand, 9729–9730
Large newspaper printing presses and components, assembled or unassembled, from—
Japan, 9730–9731
Malleable cast iron pipe fittings from—
China, 9731
Polyethylene retail carrier bags from—
China, 9731–9732
Stainless steel bar from—
India, 9732
Steel concrete reinforcing bars from—
Ukraine, 9732–9733
Watches and watch movements; allocation of duty-exemptions:
Virgin Islands, 9733

**Justice Department**
*See* Justice Programs Office
NOTICES
Agency information collection activities; proposals, submissions, and approvals, 9776–9777
Privacy Act; systems of records, 9777–9779

**Justice Programs Office**
NOTICES
Meetings:
Global Justice Information Sharing Initiative Federal Advisory Committee, 9779

**Labor Department**
*See* Disability Employment Policy Office
*See* Employment and Training Administration
*See* Occupational Safety and Health Administration

**National Aeronautics and Space Administration**
NOTICES
Federal Acquisition Regulation (FAR):
Agency information collection activities; proposals, submissions, and approvals, 9738

**National Oceanic and Atmospheric Administration**
RULES
Fishery conservation and management:
Alaska; fisheries of Exclusive Economic Zone—
Gulf of Alaska groundfish, 9676–9707
Pollock, 9676

**PROPOSED RULES**
Fishery conservation and management:
Northeastern United States fisheries—
Atlantic surfclam and ocean quahog, 9719–9724
**NOTICES**
Environmental statements; notice of intent:
Caribbean, Gulf of Mexico, and South Atlantic fisheries—
Gulf of Mexico reef fish resources, 9734–9735
Meetings:
Gulf of Mexico Fishery Management Council, 9735–9736
International Commission for Conservation of Atlantic Tunas, U.S. Section Advisory Committee, 9736
New England Fishery Management Council, 9736–9737
Reports and guidance documents; availability, etc.:
North American Datum of 1983 State Plane Coordinates in feet—
Ohio, 9737
Wyoming, 9737–9738

**National Park Service**
**NOTICES**
Environmental statements; availability, etc.:
Pipestone National Monument, MN, 9773
National Register of Historic Places; pending nominations, 9773–9775

**Nuclear Regulatory Commission**
**PROPOSED RULES**
Rulemaking petitions:
Epstein, Eric; denied, 9708–9709
**NOTICES**
Meetings:
Fuel cycle facilities—
Information exchange, 9781
Reactor Safeguards Advisory Committee, 9781–9782
Meetings; Sunshine Act, 9782–9783

**Occupational Safety and Health Administration**
**PROPOSED RULES**
Occupational safety and health standards:
Ionizing radiation; occupational exposure
Stakeholder meetings, 9716–9718

**Personnel Management Office**
**NOTICES**
Excepted service; positions placed or revoked, 9783–9786

**Postal Regulatory Commission**
**NOTICES**
Domestic rates, fees, and mail classifications:
Stationery and cards, stamped, 9786–9787

**Reclamation Bureau**
**NOTICES**
Agency information collection activities; proposals, submissions, and approvals, 9775–9776

**Securities and Exchange Commission**
**NOTICES**
Investment Company Act of 1940:
BLDRS Index Funds Trust et al., 9787–9792
Liberty All-Star Equity Fund et al., 9792–9794
Self-regulatory organizations; proposed rule changes:
American Stock Exchange LLC, 9794–9796
Chicago Board Options Exchange, Inc., 9796–9797
Chicago Stock Exchange, Inc., 9797–9798
NASDAQ Stock Market LLC, 9799–9807
National Association of Securities Dealers, Inc., 9807–9814
New York Stock Exchange LLC, 9814–9820
NYSE Arca, Inc., 9820–9825
Options Clearing Corp., 9825–9828
Philadelphia Stock Exchange, Inc., 9828–9830

**Small Business Administration**
**NOTICES**
Disaster loan areas:
Pennsylvania, 9830
*Applications, hearings, determinations, etc.:*
Emergence Capital Partners SBIC, L.P., 9830

**Social Security Administration**
**PROPOSED RULES**
Social security benefits and supplemental security income:
Federal old age, survivors, and disability insurance, and aged, blind, and disabled—
Methods for conducting personal conferences when waiver of recovery of Title II or XVI overpayment cannot be approved, 9709–9712

**Substance Abuse and Mental Health Services Administration**
**NOTICES**
Agency information collection activities; proposals, submissions, and approvals, 9767–9768

**Surface Transportation Board**
**NOTICES**
Railroad operation, acquisition, construction, etc.:
Idaho & Sedalia Transportation Co., LLC, 9832

**Transportation Department**
*See* Federal Aviation Administration
*See* Federal Railroad Administration
*See* Surface Transportation Board

**Treasury Department**
*See* Internal Revenue Service

**U.S. Citizenship and Immigration Services**
**NOTICES**
Agency information collection activities; proposals, submissions, and approvals, 9768–9770

---

**Separate Parts In This Issue**

**Part II**
Interior Department, Indian Affairs Bureau, 9836–9840

---

**Reader Aids**
Consult the Reader Aids section at the end of this issue for phone numbers, online resources, finding aids, reminders, and notice of recently enacted public laws.

To subscribe to the Federal Register Table of Contents LISTSERV electronic mailing list, go to http://listserv.access.gpo.gov and select Online mailing list archives, FEDREGTOC-L, Join or leave the list (or change settings); then follow the instructions.

## CFR PARTS AFFECTED IN THIS ISSUE

A cumulative list of the parts affected this month can be found in the Reader Aids section at the end of this issue.

**9 CFR**
317 ..... 9651
381 ..... 9651

**10 CFR**
**Proposed Rules:**
50 ..... 9708

**14 CFR**
39 (7 documents) ... 9652, 9655, 9657, 9658, 9660, 9662, 9666

**20 CFR**
**Proposed Rules:**
404 ..... 9709
416 ..... 9709

**21 CFR**
14 ..... 9674

**25 CFR**
61 ..... 9836

**26 CFR**
**Proposed Rules:**
301 ..... 9712

**29 CFR**
**Proposed Rules:**
1910 ..... 9716

**40 CFR**
180 ..... 9834
**Proposed Rules:**
63 ..... 9718

**44 CFR**
67 ..... 9675

**50 CFR**
679 (2 documents) ..... 9676
**Proposed Rules:**
648 ..... 9719

# Rules and Regulations

Federal Register
Vol. 72, No. 42
Monday, March 5, 2007

This section of the FEDERAL REGISTER contains regulatory documents having general applicability and legal effect, most of which are keyed to and codified in the Code of Federal Regulations, which is published under 50 titles pursuant to 44 U.S.C. 1510.

The Code of Federal Regulations is sold by the Superintendent of Documents. Prices of new books are listed in the first FEDERAL REGISTER issue of each week.

## DEPARTMENT OF AGRICULTURE

### Food Safety and Inspection Service

### 9 CFR Parts 317 and 381

**[Docket No. FSIS–2006–0045]**

**RIN 0583–AD05**

## Uniform Compliance Date for Food Labeling Regulations

**AGENCY:** Food Safety and Inspection Service, USDA.

**ACTION:** Final rule.

**SUMMARY:** The Food Safety and Inspection Service (FSIS) is establishing January 1, 2010, as the uniform compliance date for new food labeling regulations that are issued between January 1, 2007, and December 31, 2008. FSIS periodically announces uniform compliance dates for new meat and poultry food labeling requirements to minimize the economic impact of label changes. On December 14, 2004, FSIS issued a final rule announcing that it will adopt uniform compliance dates and established January 1, 2008, as the uniform compliance date for food labeling regulations that issued between January 1, 2005, and December 31, 2006.

**DATES:** *Effective Date:* This rule is effective March 5, 2007. Submit comments by April 4, 2007.

**ADDRESSES:** FSIS invites interested persons to submit comments on this final rule. Comments may be submitted by any of the following methods:

- *Federal eRulemaking Portal:* This Web site provides the ability to type short comments directly into the comment field on this Web page or attach a file for lengthier comments. Go to *http://www.regulations.gov* and, in the ''Search for Open Regulations'' box, select ''Food Safety and Inspection Service'' from the Agency drop-down menu, then click on ''Submit.'' In the Docket ID column, select the FDMS Docket Number FSIS–2006–0045 to submit or view public comments and to view supporting and related materials available electronically.
- *Mail, including floppy disks or CD-ROM's, and hand- or courier-delivered items:* Send to FSIS Docket Room, Docket Clerk, U.S. Department of Agriculture (USDA), FSIS, 300 12th Street, SW., Room 102, Cotton Annex Building, Washington, DC 20250.
- *Electronic mail:* *fsis.regulationscomments@fsis.usda.gov.*

All submissions received must include the Agency name and docket number FSIS–2006–0045.

All comments submitted in response to this final rule, as well as research and background information used by FSIS in developing this document, will be posted to the regulations.gov Web site. The background information and comments will be available for public inspection in the FSIS Docket Room at the address listed above between 8:30 a.m. and 4:30 p.m., Monday through Friday.

**FOR FURTHER INFORMATION CONTACT:** Robert C. Post, Ph.D., Director, Labeling and Consumer Protection Staff, Office of Policy, Program, and Employee Development, FSIS, USDA, Washington, DC 20250–3700, Telephone (202) 205–0279, Fax (202) 205–3625.

**SUPPLEMENTARY INFORMATION:**

### Background

FSIS periodically issues regulations that require changes in the labeling of meat and poultry food products. Many meat and poultry establishments also produce non-meat and non-poultry food products subject to the jurisdiction of the Food and Drug Administration (FDA). FDA also periodically issues regulations that require changes in the labeling of such food products.

FSIS established the approach, starting in December 2004 (69 FR 74405), that it will set uniform compliance dates in two year increments and periodically issue final rules announcing those dates. This approach is similar to that employed by FDA. Two year increments enhance the industry's ability to make orderly adjustments to new labeling requirements without unduly exposing consumers to outdated labels. With this approach to effecting compliance, the meat and poultry products industry is able to plan for the use of label inventories and to develop new labeling materials that meet the requirements of all labeling regulations made within the two year period, thereby minimizing the economic impact of labeling changes. By establishing a uniform compliance date that is the same as FDA's, FSIS is providing meat and poultry product manufacturers with a greater ability to adjust production plans to new labeling requirements across all of their product lines.

Establishing this policy also serves consumers' interests, because the cost of multiple short-term label revisions that would otherwise occur would likely be passed on to consumers in the form of higher prices.

It will remain FSIS' policy to encourage industry to comply with new labeling regulations as quickly as feasible. Thus, when industry members voluntarily change their labels, they should consider incorporating any new requirements that have been published as final regulations up to that time.

The new uniform compliance date will apply only to final FSIS regulations that require changes in the labeling of meat and poultry products and that are published after January 1, 2007, and before December 31, 2008. In each of these regulations, FSIS will specifically identify January 1, 2010, as the compliance date. All meat and poultry food products that are subject to labeling regulations promulgated between January 1, 2007, and December 31, 2008, will be required to comply with these regulations when introduced into commerce on or after January 1, 2010. If any food labeling regulation involves special circumstances that justify a compliance date other than January 1, 2010, the Agency will determine for that regulation an appropriate compliance date, which will be specified when the final regulation is published.

In rulemaking that began with the publication of a proposed rule on May 4, 2004, FSIS provided notice and solicited comments on the concept of establishing uniform compliance dates for labeling requirements (69 FR 24539). FSIS received only four comments, all fully supportive of the policy to set uniform compliance dates. Therefore, FSIS finds that further rulemaking for the establishment of uniform compliance dates for labeling requirements is unnecessary. However,

FSIS is providing an opportunity for comment on whether the uniform compliance date established in this final rule should be modified or revoked.

**Executive Order 12866: Benefit-Cost Analysis**

FSIS has examined the impacts of the final rule under Executive Order 12866. Executive Order 12866 directs agencies to assess all costs and benefits of available regulatory alternatives and, when regulation is necessary, to select regulatory approaches that maximize net benefits (including potential economic, environmental, public health and safety, and other advantages; distributive impacts; and equity). This action has been determined to be not significant and, therefore, has not been reviewed by the Office of Management and Budget.

Establishing a uniform compliance date for all future Federal food product labeling regulations affecting the meat and poultry industry that are issued by FSIS over a two year period will eliminate potentially burdensome requirements otherwise faced by the industry.

The regulation also greatly limits the possibility of potentially conflicting compliance dates for labeling requirements developed for meat and poultry products and labeling requirements developed for non-meat and non-poultry products. It thus provides for an orderly industry adjustment to any new labeling requirements. Labeling changes in response to Federal regulations will likely be less frequent, and establishments will be able to plan for full utilization of their labeling stocks.

**Need for the Rule**

Establishing uniform compliance dates for food labeling regulations issued within specified time periods minimizes the economic impact of label changes for industry and may indirectly benefit consumers if cost savings are passed on in the form of lower prices.

**Regulatory Flexibility Analysis**

This rule does not have a significant economic impact on a substantial number of small entities. Consequently, an initial regulatory flexibility analysis is not required (5 U.S.C. 601–612). The uniform compliance date does not impose any burden on small entities. The Agency will conduct regulatory flexibility analyses of future labeling regulations if such analyses are required.

**Paperwork Requirements**

There are no paperwork or recordkeeping requirements associated with this policy under the Paperwork Reduction Act of 1995 (44 U.S.C. 3501–3520).

**Expected Environmental Effects**

The establishment of a uniform compliance date for food labeling regulations is an activity that will not have a significant individual or cumulative effect on the human environment. Therefore, this action is appropriately subject to the categorical exclusion from the preparation of an environmental assessment or environmental impact statement provided under 7 CFR 1b.4(6) of the U.S. Department of Agriculture regulations.

*Additional Public Notification*

Public awareness of all segments of rulemaking and policy development is important. Consequently, in an effort to ensure that minorities, women, and persons with disabilities are aware of this rule, FSIS will announce it on-line through the FSIS Web page located at *http://www.fsis.usda.gov/regulations_&_policies/2007_Interim_&_Final_Rules_Index/index.asp.*

The Regulations.gov Web site is the central online rulemaking portal of the United States government. It is being offered as a public service to increase participation in the Federal government's regulatory activities. FSIS participates in Regulations.gov and will accept comments on documents published on the site. The site allows visitors to search by keyword or Department or Agency for rulemakings that allow for public comment. Each entry provides a quick link to a comment form so that visitors can type in their comments and submit them to FSIS. The Web site is located at *http://www.regulations.gov/.*

FSIS also will make copies of this **Federal Register** publication available through the FSIS Constituent Update, which is used to provide information regarding FSIS policies, procedures, regulations, **Federal Register** notices, public meetings, recalls, and other types of information that could affect or would be of interest to our constituents and stakeholders. The update is communicated via Listserv, a free e-mail subscription service consisting of industry, trade, and farm groups, consumer interest groups, allied health professionals, scientific professionals, and other individuals who have requested to be included. The update also is available on the FSIS Web page. Through Listserv and the Web page, FSIS is able to provide information to a much broader, more diverse audience.

In addition, FSIS offers an e-mail subscription service that provides an automatic and customized notification when popular pages are updated, including **Federal Register** publications and related documents. This service is available at *http://www.fsis.usda.gov/news_and_events/email_subscription/* and allows FSIS customers to sign up for subscription options across eight categories. Options range from recalls to export information to regulations, directives and notices. Customers can add or delete subscriptions themselves and have the option to password protect their account.

Done at Washington, DC, on: February 27, 2007.

**David P. Goldman,**

*Acting Administrator.*

[FR Doc. E7–3725 Filed 3–2–07; 8:45 am]

BILLING CODE 3410–DM–P

## DEPARTMENT OF TRANSPORTATION

### Federal Aviation Administration

### 14 CFR Part 39

**[Docket No. FAA–2006–26048; Directorate Identifier 2006–NM–191–AD; Amendment 39–14967; AD 2007–05–06]**

**RIN 2120–AA64**

## Airworthiness Directives; McDonnell Douglas Model 717–200 Airplanes

**AGENCY:** Federal Aviation Administration (FAA), Department of Transportation (DOT).

**ACTION:** Final rule.

**SUMMARY:** The FAA is adopting a new airworthiness directive (AD) for certain McDonnell Douglas Model 717–200 airplanes. This AD requires replacing certain attaching hardware of the bulkhead nipple assemblies of the left and right wing vent boxes with new electrical bonding attaching hardware, doing resistance testing of the new electrical bonds, and doing fuel leakage testing of the reworked nipple assemblies. This AD results from fuel system reviews conducted by the manufacturer. We are issuing this AD to provide a conductive path, from the bulkhead nipple assemblies of the left and right wing vent boxes to the airframe structure inside the wing fuel tanks, to dissipate high-amperage lightning-induced currents, which might otherwise create an ignition source for fuel vapors inside the wing

vent boxes and lead to an explosion of the fuel tanks.

**DATES:** This AD becomes effective April 9, 2007.

The Director of the Federal Register approved the incorporation by reference of a certain publication listed in the AD as of April 9, 2007.

**ADDRESSES:** You may examine the AD docket on the Internet at *http://dms.dot.gov* or in person at the Docket Management Facility, U.S. Department of Transportation, 400 Seventh Street, SW., Nassif Building, Room PL–401, Washington, DC.

Contact Boeing Commercial Airplanes, Long Beach Division, 3855 Lakewood Boulevard, Long Beach, California 90846, *Attention:* Data and Service Management, Dept. C1–L5A (D800–0024), for the service information identified in this AD.

**FOR FURTHER INFORMATION CONTACT:** Samuel Lee, Aerospace Engineer, Propulsion Branch, ANM–140L, FAA, Los Angeles Aircraft Certification Office, 3960 Paramount Boulevard, Lakewood, California 90712–4137; telephone (562) 627–5262; fax (562) 627–5210.

**SUPPLEMENTARY INFORMATION:**

## Examining the Docket

You may examine the airworthiness directive (AD) docket on the Internet at *http://dms.dot.gov* or in person at the Docket Management Facility office between 9 a.m. and 5 p.m., Monday through Friday, except Federal holidays. The Docket Management Facility office (telephone (800) 647–5227) is located on the plaza level of the Nassif Building at the street address stated in the **ADDRESSES** section.

## Discussion

The FAA issued a notice of proposed rulemaking (NPRM) to amend 14 CFR part 39 to include an AD that would apply to certain McDonnell Douglas Model 717–200 airplanes. That NPRM was published in the **Federal Register** on October 13, 2006 (71 FR 60446). That NPRM proposed to require replacing certain attaching hardware of the bulkhead nipple assemblies of the left and right wing vent boxes with new electrical bonding attaching hardware, doing resistance testing of the new electrical bonds, and doing fuel leakage testing of the reworked nipple assemblies.

## Comments

We provided the public the opportunity to participate in the development of this AD. We have considered the comments received.

### Request To Clarify Service Information Requirement

One commenter, Hawaiian Airlines, requests that we clarify what service information is acceptable for compliance with the AD. The commenter asserts that the NPRM states that the use of Boeing Service Bulletin 717–28–0011, Revision 2, dated July 19, 2006, is acceptable for compliance. However, the commenter states that, although Revision 2 of the service bulletin added a leakage test of the reworked nipple assemblies, Revision 2 states that no further work is required. Therefore, the commenter inquires whether compliance with earlier revisions of the service information will be acceptable.

We agree that there may be some confusion here. Service Bulletin 717–28–0011, Revision 1, dated January 24, 2006; and Revision 2, dated July 19, 2006; both state that no further work is required. However, Revision 1 added a ''leak check,'' and Revision 2 states that a ''fueling capacity and leak check procedure'' has been added. In fact, the fueling capacity and leak check procedure specified in Revision 2 combines the fuel leakage test from the original issue of the service bulletin, dated April 16, 2004, and the leak check from Revision 1 into a single step, Work Instruction 3.B.14., ''fuel leakage test.'' Work Instruction 3.B.14. cites a different airplane maintenance manual (AMM) chapter than the original issue or Revision 1 of the service bulletin (AMM 28–11–00). Additionally, the remaining Work Instruction steps have been renumbered. However, if an operator accomplished the actions specified in the original issue or Revision 1 of the service bulletin prior to the effective date of the AD, and no leakage of fuel has since occurred in the subject areas, no additional work is required for compliance with the corresponding requirements of the AD. We have revised paragraph (g) of the AD to include the original issue of the service bulletin.

### Request for Clarification of Class 'L' Reference

Another commenter, AirTran Airways, states that it supports the NPRM, but expresses confusion regarding the term ''class 'L' '' that appears in Figure 1 of Boeing Service Bulletin 717–28–0011, Revision 2. The commenter states that, although note (e) of Figure 1 specifies to: ''Do class 'L' resistance test * * * '' and ''Refer to SWPM [standard wiring practices manual] 20–50–01,'' Section 20–50–01 of the Boeing SWPM does not identify a class 'L,' but rather provides a maximum direct current (DC) resistance and path for lightning protection. The commenter therefore requests that we clarify the reference to class 'L' in the final rule.

We partially agree. It is true that note (e) of Figure 1 of the service bulletin refers to a class 'L' resistance test, while Section 20–50–01 of the Boeing SWPM no longer refers to class 'L.' Class 'L' had to do with lightning protection, specified a maximum resistance of 0.0025 ohm, and appeared in earlier versions of the SWPM. However, although the term ''class 'L' '' no longer appears in the SWPM, note (e) of Figure 1 of the service bulletin specifies the resistance test retained in the SWPM, which states that the maximum resistance must not exceed 2.5 milliohms (0.0025 ohm). We have determined that the term ''class 'L' '' is not important in this context, and the directions of note (e) of Figure 1 of the service bulletin are otherwise acceptable as written; however, for clarity, we have added a note after paragraph (f) of the AD concerning this issue.

### Request To Revise Compliance Time

The same commenter notes that the compliance time in the NPRM does not match that in the service bulletin. The commenter states that the NPRM specifies a reduced compliance time of 78 months due to the nature of the unsafe condition, and that this difference has been coordinated with Boeing. The commenter suggests that the service bulletin should be revised to match the compliance time required by the AD.

We do not agree. As stated in the NPRM, Boeing concurs with the proposed compliance time. The compliance time is clearly stated in the NPRM. Therefore, there is no safety-related purpose for revising the service bulletin. Further, we do not have the authority to require Boeing to revise the service bulletin to match the compliance time required by this AD. Therefore, we do not find it necessary to pursue any change to the service bulletin.

### Request To Publish Incorporation by Reference (IBR) Documents on the Docket Management System (DMS)

The Modification and Replacement Parts Association (MARPA) asserts that IBR documents should be made available to the public by publication in the DMS, keyed to the action that incorporates them. MARPA therefore requests that such documents be published in the DMS prior to release of the final rule.

We do not agree with this request. We are currently in the process of reviewing issues surrounding the posting of service bulletins on the DMS as part of an AD docket. Once we have thoroughly examined all aspects of this issue and have made a final determination, we will consider whether our current practice needs to be revised. No change to the AD is necessary in this regard.

**Request To Add FAA Statement of Intent**

MARPA requests that, during the NPRM stage of AD rulemaking, the FAA state its intent to IBR any relevant service information. MARPA states that without such a statement in the NPRM, it is unclear whether we will IBR the relevant service information in the final rule.

We do not concur with MARPA's request. When we reference certain service information in a proposed AD, the public can assume we intend to IBR that service information, as required by the Office of the Federal Register. No change to the AD is necessary in regard to this request.

**Conclusion**

We have carefully reviewed the available data, including the comments received, and determined that air safety and the public interest require adopting the AD with the change described previously. We have determined that this change will neither increase the economic burden on any operator nor increase the scope of the AD.

**Costs of Compliance**

There are about 138 airplanes of the affected design in the worldwide fleet. This AD affects about 108 airplanes of U.S. registry. The required actions take about 6 work hours per airplane, at an average labor rate of $80 per work hour. The manufacturer states that it will supply required parts to the operators at no cost. Based on these figures, the estimated cost of the AD for U.S. operators is $51,840, or $480 per airplane.

**Authority for This Rulemaking**

Title 49 of the United States Code specifies the FAA's authority to issue rules on aviation safety. Subtitle I, Section 106, describes the authority of the FAA Administrator. Subtitle VII, Aviation Programs, describes in more detail the scope of the Agency's authority.

We are issuing this rulemaking under the authority described in Subtitle VII, Part A, Subpart III, Section 44701, ''General requirements.'' Under that section, Congress charges the FAA with promoting safe flight of civil aircraft in air commerce by prescribing regulations for practices, methods, and procedures the Administrator finds necessary for safety in air commerce. This regulation is within the scope of that authority because it addresses an unsafe condition that is likely to exist or develop on products identified in this rulemaking action.

**Regulatory Findings**

We have determined that this AD will not have federalism implications under Executive Order 13132. This AD will not have a substantial direct effect on the States, on the relationship between the national government and the States, or on the distribution of power and responsibilities among the various levels of government.

*For the reasons discussed above, I certify that this AD:*

(1) Is not a ''significant regulatory action'' under Executive Order 12866;

(2) Is not a ''significant rule'' under DOT Regulatory Policies and Procedures (44 FR 11034, February 26, 1979); and

(3) Will not have a significant economic impact, positive or negative, on a substantial number of small entities under the criteria of the Regulatory Flexibility Act.

We prepared a regulatory evaluation of the estimated costs to comply with this AD and placed it in the AD docket. See the **ADDRESSES** section for a location to examine the regulatory evaluation.

**List of Subjects in 14 CFR Part 39**

Air transportation, Aircraft, Aviation safety, Incorporation by reference, Safety.

**Adoption of the Amendment**

■ Accordingly, under the authority delegated to me by the Administrator, the FAA amends 14 CFR part 39 as follows:

## PART 39—AIRWORTHINESS DIRECTIVES

■ 1. The authority citation for part 39 continues to read as follows:

**Authority:** 49 U.S.C. 106(g), 40113, 44701.

**§ 39.13 [Amended]**

■ 2. The Federal Aviation Administration (FAA) amends § 39.13 by adding the following new airworthiness directive (AD):

**2007–05–06 McDonnell Douglas:** Amendment 39–14967. Docket No. FAA–2006–26048; Directorate Identifier 2006–NM–191–AD.

**Effective Date**

(a) This AD becomes effective April 9, 2007.

**Affected ADs**

(b) None.

**Applicability**

(c) This AD applies to McDonnell Douglas Model 717–200 airplanes, certificated in any category; as identified in Boeing Service Bulletin 717–28–0011, Revision 2, dated July 19, 2006.

**Unsafe Condition**

(d) This AD results from fuel system reviews conducted by the manufacturer. We are issuing this AD to provide a conductive path, from the bulkhead nipple assemblies of the left and right wing vent boxes to the airframe structure inside the wing fuel tanks, to dissipate high-amperage lightning-induced currents, which might otherwise create an ignition source for fuel vapors inside the wing vent boxes and lead to an explosion of the fuel tanks.

**Compliance**

(e) You are responsible for having the actions required by this AD performed within the compliance times specified, unless the actions have already been done.

**Installing Electrical Bonding, and Resistance and Fuel Leakage Testing**

(f) Within 78 months after the effective date of this AD, replace certain attaching hardware of the bulkhead nipple assemblies of the left and right wing vent boxes with new electrical bonding attaching hardware, do resistance testing of the new electrical bonds, and do fuel leakage testing of the reworked nipple assemblies; in accordance with the Accomplishment Instructions of Boeing Service Bulletin 717–28–0011, Revision 2, dated July 19, 2006.

**Note 1:** Note (e) of Figure 1 of the service bulletin refers to a class 'L' resistance test. However, we have determined that the term ''class 'L' '' is not important in this context and the directions of note (e) of Figure 1 of the service bulletin are otherwise acceptable as written.

**Actions Accomplished According to Previous Issue of Service Bulletin**

(g) Actions accomplished before the effective date of this AD in accordance with Boeing Service Bulletin 717–28–0011, dated April 16, 2004; or Revision 1, dated January 24, 2006; are acceptable for compliance with the corresponding actions specified in this AD.

**Alternative Methods of Compliance (AMOCs)**

(h)(1) The Manager, ANM–116, International Branch, Transport Airplane Directorate, FAA, has the authority to approve AMOCs for this AD, if requested in accordance with the procedures found in 14 CFR 39.19.

(2) Before using any AMOC approved in accordance with § 39.19 on any airplane to which the AMOC applies, notify the appropriate principal inspector in the FAA Flight Standards Certificate Holding District Office.

**Material Incorporated by Reference**

(i) You must use Boeing Service Bulletin 717–28–0011, Revision 2, dated July 19, 2006, to perform the actions that are required by this AD, unless the AD specifies otherwise. The Director of the Federal Register approved the incorporation by reference of this document in accordance with 5 U.S.C. 552(a) and 1 CFR part 51. Contact Boeing Commercial Airplanes, Long Beach Division, 3855 Lakewood Boulevard, Long Beach, California 90846, *Attention:* Data and Service Management, Dept. C1–L5A (D800–0024), for a copy of this service information. You may review copies at the FAA, Transport Airplane Directorate, 1601 Lind Avenue, SW., Renton, Washington 98057–3356; or at the National Archives and Records Administration (NARA). For information on the availability of this material at NARA, call 202–741–6030, or go to: *http://www.archives.gov/federal-register/cfr/ibr-locations.html.*

Issued in Renton, Washington, on February 21, 2007.

**Ali Bahrami,**

*Manager, Transport Airplane Directorate, Aircraft Certification Service.*

[FR Doc. E7–3560 Filed 3–2–07; 8:45 am]

BILLING CODE 4910–13–P

## DEPARTMENT OF TRANSPORTATION

## Federal Aviation Administration

## 14 CFR Part 39

**[Docket No. FAA–2006–26489; Directorate Identifier 2006–CE–74–AD; Amendment 39–14966; AD 2007–05–05]**

**RIN 2120–AA64**

## Airworthiness Directives; SOCATA—Groupe AEROSPATIALE Models M.S. 760, M.S. 760 A, and M.S. 760 B Airplanes

**AGENCY:** Federal Aviation Administration (FAA), Department of Transportation (DOT).

**ACTION:** Final rule.

**SUMMARY:** We are adopting a new airworthiness directive (AD) for the products listed above. This AD results from mandatory continuing airworthiness information (MCAI) issued by an aviation authority of another country to identify and correct an unsafe condition on an aviation product. The MCAI describes the unsafe condition as:

Following Safety Alert No. SA–006, issued by the National Transportation Safety Board (NTSB) on aircraft icing, it was impossible to demonstrate that the aircraft can safely takeoff when contaminated by frost, ice, snow, or slush, and fly into icing conditions.

We are issuing this AD to require actions to correct the unsafe condition on these products.

**DATES:** This AD becomes effective April 9, 2007.

The Director of the Federal Register approved the incorporation by reference of certain publications listed in this AD as of April 9, 2007.

**ADDRESSES:** You may examine the AD docket on the Internet at *http://dms.dot.gov* or in person at the Docket Management Facility, U.S. Department of Transportation, 400 Seventh Street, SW., Nassif Building, Room PL–401, Washington, DC.

**FOR FURTHER INFORMATION CONTACT:** Albert J. Mercado, Aerospace Engineer, FAA, Small Airplane Directorate, 901 Locust, Room 301, Kansas City, Missouri 64106; *telephone:* (816) 329–4119; *fax:* (816) 329–4090.

**SUPPLEMENTARY INFORMATION:**

### Streamlined Issuance of AD

The FAA is implementing a new process for streamlining the issuance of ADs related to MCAI. The streamlined process will allow us to adopt MCAI safety requirements in a more efficient manner and will reduce safety risks to the public. This process continues to follow all FAA AD issuance processes to meet legal, economic, Administrative Procedure Act, and **Federal Register** requirements. We also continue to meet our technical decision-making responsibilities to identify and correct unsafe conditions on U.S.-certificated products.

This AD references the MCAI and related service information that we considered in forming the engineering basis to correct the unsafe condition. The AD contains text copied from the MCAI and for this reason might not follow our plain language principles.

### Discussion

We issued a notice of proposed rulemaking (NPRM) to amend 14 CFR part 39 to include an AD that would apply to the specified products. That NPRM was published in the **Federal Register** on January 5, 2007 (72 FR 483). That NPRM proposed to correct an unsafe condition for the specified products. The MCAI states:

Following Safety Alert No. SA–006, issued by the National Transportation Safety Board (NTSB) on aircraft icing, it was impossible to demonstrate that the aircraft can safely takeoff when contaminated by frost, ice, snow, or slush and fly into icing conditions.

The MCAI requires operational limitation on takeoff with contamination and requires a pre-takeoff check in ground icing conditions and flight into icing conditions.

### Comments

We gave the public the opportunity to participate in developing this AD. We received no comments on the NPRM or on the determination of the cost to the public.

We further analyzed this AD and determined that the limitation that prohibits TAKEOFF WITH FROST, ICE, SNOW, OR SLUSH ON THE WING, CONTROL SURFACES, HORIZONTAL TAIL, AND AIR INTAKES, * * * should be * * * WING, CONTROL SURFACES, HORIZONTAL TAIL, OR AIR INTAKES, * * * This meets the other airworthiness authority's intent and the FAA's intent of assuring that takeoff is prohibited if ice, snow, or slush is present on one of those surfaces instead of all the surfaces.

### Conclusion

We reviewed the available data and determined that air safety and the public interest require adopting the AD as proposed except for the change described above. We determined that this change will not increase the economic burden on any operator or increase the scope of the AD.

### Differences Between This AD and the MCAI or Service Information

We have reviewed the MCAI and related service information and, in general, agree with their substance. But we might have found it necessary to use different words from those in the MCAI to ensure the AD is clear for U.S. operators and is enforceable in a U.S. court of law. In making these changes, we do not intend to differ substantively from the information provided in the MCAI and related service information.

We might also have required different actions in this AD from those in the MCAI in order to follow FAA policies. Any such differences are described in a separate paragraph of the AD. These requirements, if any, take precedence over the actions copied from the MCAI.

### Costs of Compliance

We estimate that this AD will affect 41 products of U.S. registry. We also estimate that it will take about 1 work-hour per product to comply with this AD. The average labor rate is $80 per work-hour. Based on these figures, we estimate the cost of this AD on U.S. operators to be $3,280, or $80 per product.

### Authority for This Rulemaking

Title 49 of the United States Code specifies the FAA's authority to issue rules on aviation safety. Subtitle I, section 106, describes the authority of the FAA Administrator. ''Subtitle VII:

Aviation Programs,'' describes in more detail the scope of the Agency's authority.

We are issuing this rulemaking under the authority described in ''Subtitle VII, Part A, Subpart III, Section 44701: General requirements.'' Under that section, Congress charges the FAA with promoting safe flight of civil aircraft in air commerce by prescribing regulations for practices, methods, and procedures the Administrator finds necessary for safety in air commerce. This regulation is within the scope of that authority because it addresses an unsafe condition that is likely to exist or develop on products identified in this rulemaking action.

## Regulatory Findings

We determined that this AD will not have federalism implications under Executive Order 13132. This AD will not have a substantial direct effect on the States, on the relationship between the national government and the States, or on the distribution of power and responsibilities among the various levels of government.

*For the reasons discussed above, I certify this AD:*

(1) Is not a ''significant regulatory action'' under Executive Order 12866;

(2) Is not a ''significant rule'' under DOT Regulatory Policies and Procedures (44 FR 11034, February 26, 1979); and

(3) Will not have a significant economic impact, positive or negative, on a substantial number of small entities under the criteria of the Regulatory Flexibility Act.

We prepared a regulatory evaluation of the estimated costs to comply with this AD and placed it in the AD Docket.

## Examining the AD Docket

You may examine the AD docket on the Internet at *http://dms.dot.gov*; or in person at the Docket Management Facility between 9 a.m. and 5 p.m., Monday through Friday, except Federal holidays. The AD docket contains the NPRM, the regulatory evaluation, any comments received, and other information. The street address for the Docket Office (telephone (800) 647–5227) is in the **ADDRESSES** section. Comments will be available in the AD docket shortly after receipt.

## List of Subjects in 14 CFR Part 39

Air transportation, Aircraft, Aviation safety, Incorporation by reference, Safety.

## Adoption of the Amendment

■ Accordingly, under the authority delegated to me by the Administrator, the FAA amends 14 CFR part 39 as follows:

## PART 39—AIRWORTHINESS DIRECTIVES

■ 1. The authority citation for part 39 continues to read as follows:

**Authority:** 49 U.S.C. 106(g), 40113, 44701.

### § 39.13 [Amended]

■ 2. The FAA amends § 39.13 by adding the following new AD:

**2007–05–05 SOCATA—Groupe AEROSPATIALE:** Amendment 39–14966; Docket No. FAA–2006–26489; Directorate Identifier 2006–CE–74–AD.

**Effective Date**

(a) This airworthiness directive (AD) becomes effective April 9, 2007.

**Affected ADs**

(b) None.

**Applicability**

(c) This AD applies to Models M.S. 760, M.S. 760 A, and M.S. 760 B airplanes, all serial numbers, certificated in any category.

**Reason**

(d) The mandatory continuing airworthiness information (MCAI) states:

Following Safety Alert No. SA–006, issued by the National Transportation Safety Board (NTSB) on aircraft icing, it was impossible to demonstrate that the aircraft can safely takeoff when contaminated by frost, ice, snow, or slush and fly into icing conditions.

**Actions and Compliance**

(e) Do the following, unless already done:

(1) Prior to the next flight after April 9, 2007 (the effective date of this AD), insert a copy of this AD into the Limitations Section of the Airplane Flight Manual (AFM) to incorporate the following.

(i) Takeoff with frost, ice, snow, or slush on the wing, control surfaces, horizontal tail, or air intakes, and flight into icing conditions are prohibited.

(ii) Prior to each flight in which ground icing conditions exist as described in EADS SOCATA MS760 Aircraft Mandatory Service Bulletin SB 76–053, dated October 2006, perform a visual/tactile check. No visible trace of frost is acceptable, particularly on stabilizers and wing upper surfaces and leading edges as well as on air intakes.

(2) The owner/operator holding at least a private pilot certificate as authorized by section 43.7 of the Federal Aviation Regulations (14 CFR 43.7) may do the actions of this AD. Make an entry into the aircraft records showing compliance with this AD in accordance with section 43.9 of the Federal Aviation Regulations (14 CFR 43.9).

**FAA AD Differences**

**Note:** This AD differs from the MCAI and/or service information as follows:

(1) The limitation in the MCAI that prohibits takeoff with frost, ice, snow, or slush on the wing, control surfaces, horizontal tail, and air intakes, * * * is changed in this AD to * * * wing, control surfaces, horizontal tail, or air intakes, * * * This meets the other airworthiness authority's intent and the FAA's intent of assuring that takeoff is prohibited if ice, snow, or slush is present on one of those surfaces instead of all the surfaces.

(2) We added information in paragraph (e) that allows the owner/operator to insert a copy of this AD into the Limitation Section of the AFM. Without this information, a licensed mechanic would be required to do the AFM insertion.

**Other FAA AD Provisions**

(f) The following provisions also apply to this AD:

(1) *Alternative Methods of Compliance (AMOCs):* The Manager, Standards Staff, FAA, Small Airplane Directorate, *ATTN:* Albert J. Mercado, Aerospace Engineer, 901 Locust, Room 301, Kansas City, Missouri 64106; *telephone:* (816) 329–4119; *fax:* (816) 329–4090, has the authority to approve AMOCs for this AD, if requested using the procedures found in 14 CFR 39.19.

(2) *Airworthy Product:* For any requirement in this AD to obtain corrective actions from a manufacturer or other source, use these actions if they are FAA-approved. Corrective actions are considered FAA-approved if they are approved by the State of Design Authority (or their delegated agent). You are required to assure the product is airworthy before it is returned to service.

(3) *Reporting Requirements:* For any reporting requirement in this AD, under the provisions of the Paperwork Reduction Act (44 U.S.C. 3501 *et seq.*), the Office of Management and Budget (OMB) has approved the information collection requirements and has assigned OMB Control Number 2120–0056.

**Related Information**

(g) Refer to MCAI European Aviation Safety Agency Emergency Airworthiness Directive AD No. 2006–0348–E, dated November 20, 2006, for related information.

**Material Incorporated by Reference**

(h) You must use EADS SOCATA MS760 Aircraft Mandatory Service Bulletin SB 76–053, dated October 2006, to do the actions required by this AD, unless the AD specifies otherwise.

(1) The Director of the Federal Register approved the incorporation by reference of this service information under 5 U.S.C. 552(a) and 1 CFR part 51.

(2) For service information identified in this AD, contact EADS SOCATA, Direction des Services, 65921 Tarbes Cedex 9, France; *telephone:* 33 (0)5 62.41.73.00; *fax:* 33 (0)5 62.41.76.54.

(3) You may review copies at the FAA, Central Region, Office of the Regional Counsel, 901 Locust, Room 506, Kansas City, Missouri 64106; or at the National Archives and Records Administration (NARA). For information on the availability of this material at NARA, call 202–741–6030, or go to: *http://www.archives.gov/federal-register/cfr/ibr-locations.html.*

Issued in Kansas City, Missouri, on February 22, 2007.

**Kim Smith,**

*Manager, Small Airplane Directorate, Aircraft Certification Service.*

[FR Doc. E7–3574 Filed 3–2–07; 8:45 am]

**BILLING CODE 4910–13–P**

## DEPARTMENT OF TRANSPORTATION

## Federal Aviation Administration

## 14 CFR Part 39

**[Docket No. FAA–2006–26493; Directorate Identifier 2006–CE–78–AD; Amendment 39–14964; AD 2007–05–03]**

**RIN 2120–AA64**

## Airworthiness Directives; Alpha Aviation Design Limited (Type Certificate No. A48EU Previously Held by APEX Aircraft and AVIONS PIERRE ROBIN) Model R2160 Airplanes

**AGENCY:** Federal Aviation Administration (FAA), Department of Transportation (DOT).

**ACTION:** Final rule.

**SUMMARY:** We are adopting a new airworthiness directive (AD) for the products listed above. This AD results from mandatory continuing airworthiness information (MCAI) issued by an aviation authority of another country to identify and correct an unsafe condition on an aviation product. The MCAI describes the unsafe condition as:

An occurrence of inadvertent manipulation of the fuel shut-off control has been reported.

We are issuing this AD to require actions to correct the unsafe condition on these products.

**DATES:** This AD becomes effective April 9, 2007.

The Director of the Federal Register approved the incorporation by reference of certain publications listed in this AD as of April 9, 2007.

**ADDRESSES:** You may examine the AD docket on the Internet at *http://dms.dot.gov* or in person at the Docket Management Facility, U.S. Department of Transportation, 400 Seventh Street, SW., Nassif Building, Room PL–401, Washington, DC.

**FOR FURTHER INFORMATION CONTACT:** Karl Schletzbaum, Aerospace Engineer, FAA, Small Airplane Directorate, 901 Locust, Room 301, Kansas City, Missouri 64106; *telephone:* (816) 329–4146; *fax:* (816) 329–4090.

**SUPPLEMENTARY INFORMATION:**

### Streamlined Issuance of AD

The FAA is implementing a new process for streamlining the issuance of ADs related to MCAI. The streamlined process will allow us to adopt MCAI safety requirements in a more efficient manner and will reduce safety risks to the public. This process continues to follow all FAA AD issuance processes to meet legal, economic, Administrative Procedure Act, and **Federal Register** requirements. We also continue to meet our technical decision-making responsibilities to identify and correct unsafe conditions on U.S.-certificated products.

This AD references the MCAI and related service information that we considered in forming the engineering basis to correct the unsafe condition. The AD contains text copied from the MCAI and for this reason might not follow our plain language principles.

### Discussion

We issued a notice of proposed rulemaking (NPRM) to amend 14 CFR part 39 to include an AD that would apply to the specified products. That NPRM was published in the **Federal Register** on January 5, 2007 (72 FR 487). That NPRM proposed to correct an unsafe condition for the specified products. The MCAI states:

An occurrence of inadvertent manipulation of the fuel shut-off control has been reported.

The MCAI requires installing a protector on the fuel shut-off control.

### Comments

We gave the public the opportunity to participate in developing this AD. We received no comments on the NPRM or on the determination of the cost to the public.

### Conclusion

We reviewed the available data and determined that air safety and the public interest require adopting the AD as proposed.

### Differences Between This AD and the MCAI or Service Information

We have reviewed the MCAI and related service information and, in general, agree with their substance. But we might have found it necessary to use different words from those in the MCAI to ensure the AD is clear for U.S. operators and is enforceable in a U.S. court of law. In making these changes, we do not intend to differ substantively from the information provided in the MCAI and related service information.

We might also have required different actions in this AD from those in the MCAI in order to follow FAA policies. Any such differences are described in a separate paragraph of the AD. These requirements, if any, take precedence over the actions copied from the MCAI.

### Costs of Compliance

We estimate that this AD will affect 10 products of U.S. registry. We also estimate that it will take about 1 work-hour per product to comply with this AD. The average labor rate is $80 per work-hour. Required parts will cost about $400 per product. Where the service information lists required parts costs that are covered under warranty, we have assumed that there will be no charge for these parts. As we do not control warranty coverage for affected parties, some parties may incur costs higher than estimated here. Based on these figures, we estimate the cost of this AD to the U.S. operators to be $4,800, or $480 per product.

### Authority for This Rulemaking

Title 49 of the United States Code specifies the FAA's authority to issue rules on aviation safety. Subtitle I, section 106, describes the authority of the FAA Administrator. ''Subtitle VII: Aviation Programs,'' describes in more detail the scope of the Agency's authority.

We are issuing this rulemaking under the authority described in ''Subtitle VII, Part A, Subpart III, Section 44701: General requirements.'' Under that section, Congress charges the FAA with promoting safe flight of civil aircraft in air commerce by prescribing regulations for practices, methods, and procedures the Administrator finds necessary for safety in air commerce. This regulation is within the scope of that authority because it addresses an unsafe condition that is likely to exist or develop on products identified in this rulemaking action.

### Regulatory Findings

We determined that this AD will not have federalism implications under Executive Order 13132. This AD will not have a substantial direct effect on the States, on the relationship between the national government and the States, or on the distribution of power and responsibilities among the various levels of government.

*For the reasons discussed above, I certify this AD:*

(1) Is not a ''significant regulatory action'' under Executive Order 12866;

(2) Is not a ''significant rule'' under DOT Regulatory Policies and Procedures (44 FR 11034, February 26, 1979); and

(3) Will not have a significant economic impact, positive or negative, on a substantial number of small entities

under the criteria of the Regulatory Flexibility Act.

We prepared a regulatory evaluation of the estimated costs to comply with this AD and placed it in the AD Docket.

### Examining the AD Docket

You may examine the AD docket on the Internet at *http://dms.dot.gov*; or in person at the Docket Management Facility between 9 a.m. and 5 p.m., Monday through Friday, except Federal holidays. The AD docket contains the NPRM, the regulatory evaluation, any comments received, and other information. The street address for the Docket Office (telephone (800) 647–5227) is in the **ADDRESSES** section. Comments will be available in the flyer docket shortly after receipt.

### List of Subjects in 14 CFR Part 39

Air transportation, Aircraft, Aviation safety, Incorporation by reference, Safety.

### Adoption of the Amendment

■ Accordingly, under the authority delegated to me by the Administrator, the FAA amends 14 CFR part 39 as follows:

## PART 39—AIRWORTHINESS DIRECTIVES

■ 1. The authority citation for part 39 continues to read as follows:

**Authority:** 49 U.S.C. 106(g), 40113, 44701.

### § 39.13 [Amended]

■ 2. The FAA amends § 39.13 by adding the following new AD:

**2007–05–03 Alpha Aviation Design Limited (Type Certificate No. A48EU previously held by APEX Aircraft and AVIONS PIERRE ROBIN):** Amendment 39–14964; Docket No. FAA–2006–26493; Directorate Identifier 2006–CE–78–AD.

**Effective Date**

(a) This airworthiness directive (AD) becomes effective April 9, 2007.

**Affected ADS**

(b) None.

**Applicability**

(c) This AD applies to Model R2160 airplanes, serial numbers 1 through 378, that:

(1) Are certificated in any category; and

(2) Do not have Robin Aviation Modification No. 14 Fuel Shut-off Control Protector installed.

**Reason**

(d) The mandatory continuing airworthiness information (MCAI) states:

An occurrence of inadvertent manipulation of the fuel shut-off control has been reported.

**Actions and Compliance**

(e) *Do the following actions, unless already done:* Within the next 200 hours time-in-service after April 9, 2007 (the effective date of this AD), install a protector on the fuel shut-off control according to the instructions of Robin Aviation Imperative Service Bulletin No. 180, dated March 20, 2001.

**FAA AD Differences**

**Note:** This AD differs from the MCAI and/or service information as follows: No differences.

**Other FAA AD Provisions**

(f) *The following provisions also apply to this AD:*

(1) *Alternative Methods of Compliance (AMOCs):* The Manager, Standards Staff, FAA, Small Airplane Directorate, *ATTN:* Karl Schletzbaum, Aerospace Engineer, 901 Locust, Room 301, Kansas City, Missouri 64106; *telephone:* (816) 329–4146; *fax:* (816) 329–4090, has the authority to approve AMOCs for this AD, if requested using the procedures found in 14 CFR 39.19.

(2) *Airworthy Product:* For any requirement in this AD to obtain corrective actions from a manufacturer or other source, use these actions if they are FAA-approved. Corrective actions are considered FAA-approved if they are approved by the State of Design Authority (or their delegated agent). You are required to assure the product is airworthy before it is returned to service.

(3) *Reporting Requirements:* For any reporting requirement in this AD, under the provisions of the Paperwork Reduction Act (44 U.S.C. 3501 *et seq.*), the Office of Management and Budget (OMB) has approved the information collection requirements and has assigned OMB Control Number 2120–0056.

**Related Information**

(g) Refer to MCAI Civil Aviation Authority AD DCA/R2000/32, Effective Date: June 29, 2006, for related information.

**Material Incorporated by Reference**

(h) You must use Robin Aviation Imperative Service Bulletin No. 180, dated March 20, 2001, to do the actions required by this AD, unless the AD specifies otherwise.

(1) The Director of the Federal Register approved the incorporation by reference of this service information under 5 U.S.C. 552(a) and 1 CFR part 51.

(2) For service information identified in this AD, contact Alpha Aviation Design Limited, Ingham Road, Hamilton Airport, R.D.2. Hamilton 2020, New Zealand.

(3) You may review copies at the FAA, Central Region, Office of the Regional Counsel, 901 Locust, Room 506, Kansas City, Missouri 64106; or at the National Archives and Records Administration (NARA). For information on the availability of this material at NARA, call 202–741–6030, or go to: *http://www.archives.gov/federal-register/cfr/ibr-locations.html.*

Issued in Kansas City, Missouri, on February 22, 2007.

**Kim Smith,**

*Manager, Small Airplane Directorate, Aircraft Certification Service.*

[FR Doc. E7–3475 Filed 3–2–07; 8:45 am]

BILLING CODE 4910–13–P

---

## DEPARTMENT OF TRANSPORTATION

## Federal Aviation Administration

## 14 CFR Part 39

**[Docket No. FAA–2006–26684; Directorate Identifier 2006–NM–193–AD; Amendment 39–14969; AD 2007–05–08]**

**RIN 2120–AA64**

## Airworthiness Directives; Airbus Model A330 and A340 Airplanes

**AGENCY:** Federal Aviation Administration (FAA), Department of Transportation (DOT).

**ACTION:** Final rule.

**SUMMARY:** The FAA is adopting a new airworthiness directive (AD) for all Airbus Model A330 and A340 airplanes. This AD requires revising the Airworthiness Limitations section of the Instructions for Continued Airworthiness by incorporating new and revised certification maintenance requirements (CMRs). This AD results from the manufacturer's determination that additional and revised CMRs are necessary in order to ensure continued operational safety of the affected airplanes. We are issuing this AD to prevent safety-significant latent failures that would, in combination with one or more other specific failures or events, result in a hazardous or catastrophic failure condition.

**DATES:** This AD becomes effective April 9, 2007.

The Director of the Federal Register approved the incorporation by reference of certain publications listed in the AD as of April 9, 2007.

**ADDRESSES:** You may examine the AD docket on the Internet at *http://dms.dot.gov* or in person at the Docket Management Facility, U.S. Department of Transportation, 400 Seventh Street, SW., Nassif Building, Room PL–401, Washington, DC.

Contact Airbus, 1 Rond Point Maurice Bellonte, 31707 Blagnac Cedex, France, for service information identified in this AD.

**FOR FURTHER INFORMATION CONTACT:** Tim Backman, Aerospace Engineer, International Branch, ANM–116, FAA, Transport Airplane Directorate, 1601 Lind Avenue, SW., Renton, Washington

98057–3356; telephone (425) 227–2797; fax (425) 227–1149.

**SUPPLEMENTARY INFORMATION:**

## Examining the Docket

You may examine the airworthiness directive (AD) docket on the Internet at *http://dms.dot.gov* or in person at the Docket Management Facility office between 9 a.m. and 5 p.m., Monday through Friday, except Federal holidays. The Docket Management Facility office (telephone (800) 647–5227) is located on the plaza level of the Nassif Building at the street address stated in the **ADDRESSES** section.

## Discussion

The FAA issued a notice of proposed rulemaking (NPRM) to amend 14 CFR part 39 to include an AD that would apply to all Airbus Model A330 and A340 airplanes. That NPRM was published in the **Federal Register** on December 27, 2006 (71 FR 77632). That NPRM proposed to require revising the Airworthiness Limitations section of the Instructions for Continued Airworthiness by incorporating new and revised certification maintenance requirements (CMRs).

## Comments

We provided the public the opportunity to participate in the development of this AD. We received no comments on the NPRM or on the determination of the cost to the public.

## Conclusion

We have carefully reviewed the available data and determined that air safety and the public interest require adopting the AD as proposed.

## Costs of Compliance

This AD affects about 27 Model A330 airplanes of U.S. registry. The required actions take about 1 work hour per airplane, at an average labor rate of $80 per work hour. Based on these figures, the estimated cost of this AD for U.S. operators is $2,160, or $80 per airplane.

Currently there are no affected Model A340 airplanes on the U.S. Register. However, if an affected airplane is imported and placed on the U.S. Register in the future, the required actions would take about 1 work hour per airplane, at an average labor rate of $80 per work hour. Based on these figures, the estimated cost of this AD to U.S. operators is $80 per airplane.

## Authority for This Rulemaking

Title 49 of the United States Code specifies the FAA's authority to issue rules on aviation safety. Subtitle I, Section 106, describes the authority of the FAA Administrator. Subtitle VII, Aviation Programs, describes in more detail the scope of the Agency's authority.

We are issuing this rulemaking under the authority described in Subtitle VII, Part A, Subpart III, Section 44701, ''General requirements.'' Under that section, Congress charges the FAA with promoting safe flight of civil aircraft in air commerce by prescribing regulations for practices, methods, and procedures the Administrator finds necessary for safety in air commerce. This regulation is within the scope of that authority because it addresses an unsafe condition that is likely to exist or develop on products identified in this rulemaking action.

## Regulatory Findings

We have determined that this AD will not have federalism implications under Executive Order 13132. This AD will not have a substantial direct effect on the States, on the relationship between the national government and the States, or on the distribution of power and responsibilities among the various levels of government.

*For the reasons discussed above, I certify that this AD:*

(1) Is not a ''significant regulatory action'' under Executive Order 12866;

(2) Is not a ''significant rule'' under DOT Regulatory Policies and Procedures (44 FR 11034, February 26, 1979); and

(3) Will not have a significant economic impact, positive or negative, on a substantial number of small entities under the criteria of the Regulatory Flexibility Act.

We prepared a regulatory evaluation of the estimated costs to comply with this AD and placed it in the AD docket. See the **ADDRESSES** section for a location to examine the regulatory evaluation.

## List of Subjects in 14 CFR Part 39

Air transportation, Aircraft, Aviation safety, Incorporation by reference, Safety.

## Adoption of the Amendment

■ Accordingly, under the authority delegated to me by the Administrator, the FAA amends 14 CFR part 39 as follows:

## PART 39—AIRWORTHINESS DIRECTIVES

■ 1. The authority citation for part 39 continues to read as follows:

**Authority:** 49 U.S.C. 106(g), 40113, 44701.

### § 39.13 [Amended]

■ 2. The Federal Aviation Administration (FAA) amends § 39.13 by adding the following new airworthiness directive (AD):

**2007–05–08 Airbus:** Amendment 39–14969. Docket No. FAA–2006–26684; Directorate Identifier 2006–NM–193–AD.

**Effective Date**

(a) This AD becomes effective April 9, 2007.

**Affected ADs**

(b) None.

**Applicability**

(c) This AD applies to all Airbus Model A330 and A340 airplanes.

**Note 1:** This AD requires revisions to certain operator maintenance documents to include new inspections. Compliance with these inspections is required by 14 CFR 91.403(c). For airplanes that have been previously modified, altered, or repaired in the areas addressed by these inspections, the operator may not be able to accomplish the inspections described in the revisions. In this situation, to comply with 14 CFR 91.403(c), the operator must request approval for an alternative method of compliance according to paragraph (g) of this AD. The request should include a description of changes to the required inspections that will ensure the continued damage tolerance of the affected structure. The FAA has provided guidance for this determination in Advisory Circular (AC) 25–1529–1.

**Unsafe Condition**

(d) This AD results from the manufacturer's determination that additional and revised certification maintenance requirements (CMRs) are necessary in order to ensure continued operational safety of the affected airplanes. We are issuing this AD to prevent safety-significant latent failures that would, in combination with one or more other specific failures or events, result in a hazardous or catastrophic failure condition.

**Compliance**

(e) You are responsible for having the actions required by this AD performed within the compliance times specified, unless the actions have already been done.

**Revise the Airworthiness Limitations Section of the Instructions for Continued Airworthiness**

(f) Within 3 months after the effective date of this AD: Revise the Airworthiness Limitations section of the Instructions for Continued Airworthiness by incorporating Airbus A330 Certification Maintenance Requirements, Document 955.2074/93, Issue 19, dated March 22, 2006 (for all Model A330 airplanes); or Airbus A340 Certification Maintenance Requirements, Document 955.3019/92, Issue 14, dated December 19, 2005 (for all Model A340 airplanes). Accomplish the actions specified in the applicable CMR at the times specified in the applicable CMR and in accordance with the applicable CMR, except as provided by paragraphs (f)(1), (f)(2), (f)(3), and (f)(4) of this AD.

(1) The associated interval for any new task is to be counted from the effective date of this AD.

(2) The associated interval for any revised task is to be counted from the previous performance of the task.

(3) For Model A340 airplanes that have exceeded the more restrictive limitations of Airbus A340 Certification Maintenance Requirements, Document 955.3019/92, Issue 14, Maintenance Significant Items (MSI) 21.28.00 and 21.43.00: Do the task within 2,500 flight hours after the previous accomplishment. Repeat the task thereafter at the applicable interval in the Airbus A340 Certification Maintenance Requirements, Document 955.3019/92, Issue 14.

(4) For Model A340 airplanes that have accumulated more than 2,700 flight hours since the last maintenance done in accordance with Airbus A340 Certification Maintenance Requirements, Document 955.3019/92, Issue 14, MSI 28.24.00: Do the next task within 800 flight hours after the effective date of this AD. Repeat the task thereafter at the applicable interval in the Airbus A340 Certification Maintenance Requirements, Document 955.3019/92, Issue 14.

**Alternative Methods of Compliance (AMOCs)**

(g)(1) The Manager, International Branch, ANM–116, Transport Airplane Directorate, FAA, has the authority to approve AMOCs for this AD, if requested in accordance with the procedures found in 14 CFR 39.19.

(2) Before using any AMOC approved in accordance with § 39.19 on any airplane to which the AMOC applies, notify the appropriate principal inspector in the FAA Flight Standards Certificate Holding District Office.

**Related Information**

(h) The European Aviation Safety Agency airworthiness directives 2006–0224, dated July 27, 2006, and 2006–0225, dated July 21, 2006, also address the subject of this AD.

**Material Incorporated by Reference**

(i) You must use Airbus A330 Certification Maintenance Requirements, Document 955.2074/93, Issue 19, dated March 22, 2006; or Airbus A340 Certification Maintenance Requirements, Document 955.3019/92, Issue 14, dated December 19, 2005; as applicable, to perform the actions that are required by this AD, unless the AD specifies otherwise. The Director of the Federal Register approved the incorporation by reference of these documents in accordance with 5 U.S.C. 552(a) and 1 CFR part 51. Contact Airbus, 1 Rond Point Maurice Bellonte, 31707 Blagnac Cedex, France, for a copy of this service information. You may review copies at the FAA, Transport Airplane Directorate, 1601 Lind Avenue, SW., Renton, Washington; or at the National Archives and Records Administration (NARA). For information on the availability of this material at NARA, call 202–741–6030, or go to: *http://www.archives.gov/federal-register/cfr/ibr-locations.html.*

Issued in Renton, Washington, on February 22, 2007.

**Ali Bahrami,**

*Manager, Transport Airplane Directorate, Aircraft Certification Service.*

[FR Doc. E7–3658 Filed 3–2–07; 8:45 am]

BILLING CODE 4910–13–P

---

## DEPARTMENT OF TRANSPORTATION

## Federal Aviation Administration

## 14 CFR Part 39

**[Docket No. FAA–2006–26071; Directorate Identifier 2006–CE–51–AD; Amendment 39–14965; AD 2007–05–04]**

**RIN 2120–AA64**

## Airworthiness Directives; Mooney Airplane Company, Inc., (Mooney) Models M20M and M20R Airplanes

**AGENCY:** Federal Aviation Administration (FAA), DOT.

**ACTION:** Final rule.

**SUMMARY:** The FAA adopts a new airworthiness directive (AD) for certain Mooney Airplane Company, Inc., Models M20M and M20R airplanes. This AD requires you to remove the upper left and upper right engine mount attaching hardware, cut out and remove the upholstery and insulation between the fuselage tubular frame and the firewall, and replace the upper left and upper right engine mount attaching hardware with the new parts kit. This AD results from failure of the engine mount attaching hardware to maintain torque as a result of firewall insulation and upholstery being compressed between the fuselage tubular frame and the firewall at the upper left and upper right engine mount attach points. We are issuing this AD to prevent the upper right and upper left engine mounting hardware from losing torque, which could result in a reduction in engine mount load carrying capability and could lead to engine mount failure.

**DATES:** This AD becomes effective on April 9, 2007.

As of April 9, 2007, the Director of the Federal Register approved the incorporation by reference of certain publications listed in the regulation.

**ADDRESSES:** To get the service information identified in this AD, contact Mooney Airplane Company, Inc., 165 Al Mooney Road North, Kerrville, Texas 78028; *telephone:* (830) 896–6000, or go to: *http://www.mooney.com/images/pdfs/sb-pdf/m20-292a.pdf.*

To view the AD docket, go to the Docket Management Facility; U.S. Department of Transportation, 400 Seventh Street, SW., Nassif Building, Room PL–401, Washington, DC 20590–0001 or on the Internet at *http://dms.dot.gov.* The docket number is FAA–2006–26071; Directorate Identifier 2006–CE–51–AD.

**FOR FURTHER INFORMATION CONTACT:** Andrew McAnaul, Aerospace Engineer, ASW–150 (c/o MIDO–43), 10100 Reunion Place, Suite 650, San Antonio, Texas 78216; *telephone:* (210) 308–3365; *fax:* (210) 308–3370.

**SUPPLEMENTARY INFORMATION:**

### Discussion

On November 7, 2006, we issued a proposal to amend part 39 of the Federal Aviation Regulations (14 CFR part 39) to include an AD that would apply to certain Mooney Airplane Company, Inc. Models M20M and M20R airplanes. This proposal was published in the **Federal Register** as a notice of proposed rulemaking (NPRM) on November 7, 2006 (71 FR 65062). The NPRM proposed to retorque the upper left and upper right engine mounting hardware as an interim action. The NPRM also proposed to remove the upper left and upper right engine mount attaching hardware, cut out and remove the upholstery and insulation between the fuselage tubular frame and the firewall, and replace the upper left and upper right engine mount attaching hardware with the new parts kit.

### Comments

We provided the public the opportunity to participate in developing this AD. The following presents the comments received on the proposal and FAA's response to each comment:

*Comment Issue:* Jack Buster of the Modification and Replacement Parts Association (MARPA) suggests that paragraph (g) of the proposed action be amended to include the Internet Uniform Resource Locator (URL) address for the relevant service information.

We agree with the commenter's (Jack Buster, MARPA) recommendation. We added the manufacturer's Internet URL address in the information on how to obtain the relevant service information.

### Conclusion

Since the NPRM was published, the manufacturer has revised the applicable service bulletin to clarify the fastener torque requirement. The change does not change the intent of the required action and does not create any additional burden on the owners/operators. The AD will reference the appropriate service information: Mooney Airplane Company, Inc. Service

Bulletin M20–292A, dated December 22, 2006, but will give credit to anyone who has already done the action per the original service bulletin.

We have carefully reviewed the available data and determined that air safety and the public interest require adopting the AD as proposed except for minor editorial corrections. We have determined that these minor corrections:

• Are consistent with the intent that was proposed in the NPRM for correcting the unsafe condition; and

• Do not add any additional burden upon the public than was already proposed in the NPRM.

## Costs of Compliance

We estimate that this AD affects 198 airplanes in the U.S. registry.

We estimate the following costs to accomplish the required modifications:

| Labor cost | Parts cost | Total cost per airplane | Total cost on U.S. operators |
|---|---|---|---|
| Retorquing of the upper left and upper right engine mounting hardware: .5 work-hours × $80 per hour = $40. | Not Applicable | $40 | $7,920 |
| Removing insulation and upholstery material at the engine mount upper right and upper left attaching points, and installing engine mount attaching hardware with the new parts kit: 2 work-hours X $80 per hour = $160. | $20 | 180 | 35,640 |

## Authority for This Rulemaking

Title 49 of the United States Code specifies the FAA's authority to issue rules on aviation safety. Subtitle I, Section 106 describes the authority of the FAA Administrator. Subtitle VII, Aviation Programs, describes in more detail the scope of the agency's authority.

We are issuing this rulemaking under the authority described in Subtitle VII, Part A, Subpart III, Section 44701, ''General requirements.'' Under that section, Congress charges the FAA with promoting safe flight of civil aircraft in air commerce by prescribing regulations for practices, methods, and procedures the Administrator finds necessary for safety in air commerce. This regulation is within the scope of that authority because it addresses an unsafe condition that is likely to exist or develop on products identified in this AD.

## Regulatory Findings

We have determined that this AD will not have federalism implications under Executive Order 13132. This AD will not have a substantial direct effect on the States, on the relationship between the national government and the States, or on the distribution of power and responsibilities among the various levels of government.

*For the reasons discussed above, I certify that this AD:*

1. Is not a ''significant regulatory action'' under Executive Order 12866;

2. Is not a ''significant rule'' under the DOT Regulatory Policies and Procedures (44 FR 11034, February 26, 1979); and

3. Will not have a significant economic impact, positive or negative, on a substantial number of small entities under the criteria of the Regulatory Flexibility Act.

We prepared a summary of the costs to comply with this AD (and other information as included in the Regulatory Evaluation) and placed it in the AD Docket. You may get a copy of this summary by sending a request to us at the address listed under **ADDRESSES**. Include ''Docket No. FAA–2006–26071; Directorate Identifier 2006–CE–51–AD'' in your request.

## List of Subjects in 14 CFR Part 39

Air transportation, Aircraft, Aviation safety, Incorporation by reference, Safety.

## Adoption of the Amendment

■ Accordingly, under the authority delegated to me by the Administrator, the Federal Aviation Administration amends part 39 of the Federal Aviation Regulations (14 CFR part 39) as follows:

## PART 39—AIRWORTHINESS DIRECTIVES

■ 1. The authority citation for part 39 continues to read as follows:

**Authority:** 49 U.S.C. 106(g), 40113, 44701.

### § 39.13 [Amended]

■ 2. FAA amends § 39.13 by adding a new AD to read as follows:

**2007–05–04 Mooney Airplane Company, Inc., (Mooney) Models M20M and M20R Airplanes:** Amendment 39–14965; Docket No. FAA–2006–26071; Directorate Identifier 2006–CE–51–AD.

**Effective Date**

(a) This AD becomes effective on April 9, 2007.

**Affected ADs**

(b) None.

**Applicability**

(c) This AD applies to Mooney Airplane Company, Inc., (Mooney) Model M20M airplanes, serial numbers 27–0317 through 27–0355 and Model M20R airplanes, serial numbers 29–0290 through 29–0448, that are certificated in any category.

**Unsafe Condition**

(d) This AD is the result of failure of the engine mount attaching hardware to maintain torque as a result of firewall insulation and upholstery being compressed between the fuselage tubular frame and the firewall at the upper left and upper right engine mount attach points. The actions specified in this AD are intended to prevent the upper right and upper left engine mounting hardware from losing torque. This failure could lead to a reduction in engine mount load carrying capability and could result in engine mount failure.

**Compliance**

(e) To address this problem, you must do the following, unless already done:

| Actions | Compliance | Procedures |
|---|---|---|
| (1) Locate and retorque the upper left and upper right engine mount attaching hardware. | Within the next 25 hours time-in-service (TIS) after April 9, 2007 (the effective date of this AD). | Follow Mooney Airplane Company, Inc. Service Bulletin M20–292A, dated December 22, 2006. |

| Actions | Compliance | Procedures |
|---|---|---|
| (2) Replace the old engine mount attaching hardware by doing the following:. (i) Remove and discard the upper left and upper right engine mount attaching hardware; (ii) Cut out and remove the upholstery and insulation material to allow full metal-to-metal contact of the fuselage tubular frame to the firewall; and (iii) Install the new upper left and upper right engine mount attaching hardware part kits | Within the next 100 hours time-in-service (TIS) after April 9, 2007 (the effective date of this AD). | Follow Mooney Airplane Company, Inc. Service Bulletin M20–292A, dated December 22, 2006. |
| (3) If you do the actions of paragraph (e)(2) of this AD before the compliance time specified for the action in paragraph (e)(1) of this AD, it terminates the requirement for the action in paragraph (e)(1) of this AD. | As of April 9, 2007 (the effective date of this AD). | Follow Mooney Airplane Company, Inc. Service Bulletin M20–292A, dated December 22, 2006. |

(f) Compliance will be acceptable if the above actions are accomplished by following the procedures described in Mooney Airplane Company, Inc. Service Bulletin M20–292, dated September 22, 2006. You may take ''unless already done'' credit, and no further action per this AD is necessary.

**Alternative Methods of Compliance (AMOCs)**

(g) The Manager, Fort Worth Airplane Certification Office, FAA, ATTN: Andrew McAnaul, Aerospace Engineer, ASW–150 (c/o MIDO–43), 10100 Reunion Place, Suite 650, San Antonio, Texas 78216; telephone: (210) 308–3365; fax: (210) 308–3370, has the authority to approve AMOCs for this AD, if requested using the procedures found in 14 CFR 39.19.

**Related Information**

(h) None.

**Material Incorporated by Reference**

(i) You must use Mooney Airplane Company, Inc. Service Bulletin M20–292A, dated December 22, 2006, to do the actions required by this AD, unless the AD specifies otherwise.

(1) The Director of the Federal Register approved the incorporation by reference of this service information under 5 U.S.C. 552(a) and 1 CFR part 51.

(2) For service information identified in this AD, contact the Mooney Airplane Company, Inc., 165 Al Mooney Road North, Kerrville, TX 78028, *telephone:* 830–896–6000, or go to: *http://www.mooney.com/images/pdfs/sb-pdf/m20-292a.pdf.*

(3) You may review copies at the FAA, Central Region, Office of the Regional Counsel, 901 Locust, Kansas City, Missouri 64106; or at the National Archives and Records Administration (NARA). For information on the availability of this material at NARA, call 202–741–6030, or go to: *http://www.archives.gov/federal_register/code_of_federal_regulations/ibr_locations.html.*

Issued in Kansas City, Missouri, on February 21, 2007.

**Kim Smith,**

*Manager, Small Airplane Directorate, Aircraft Certification Service.*

[FR Doc. E7–3575 Filed 3–2–07; 8:45 am]

BILLING CODE 4910–13–P

## DEPARTMENT OF TRANSPORTATION

## Federal Aviation Administration

## 14 CFR Part 39

**[Docket No. FAA–2006–23871; Directorate Identifier 2006–NE–01–AD; Amendment 39–14975; AD 2007–05–14]**

**RIN 2120–AA64**

## Airworthiness Directives; General Electric Company (GE) CF6–80C2 Turbofan Engines

**AGENCY:** Federal Aviation Administration (FAA), Department of Transportation (DOT).

**ACTION:** Final rule.

**SUMMARY:** The FAA is adopting a new airworthiness directive (AD) for GE CF6–80C2 series turbofan engines. This AD requires replacing certain installed part number (P/N) and serial number (SN) cast titanium weld-repaired forward engine mount platforms and cast titanium forward mount yokes, with a forged titanium or a non-welded cast titanium part. This AD results from the discovery of cracks, in a weld-repaired area on a forward engine mount platform and a forward engine mount yoke, found during a fluorescent penetrant inspection (FPI). These parts were weld-repaired during manufacture. We are issuing this AD to prevent cracks in the forward engine mount platform and forward engine mount yoke that could result in possible separation of the engine from the airplane.

**DATES:** This AD becomes effective April 9, 2007.

**ADDRESSES:** You can get the service information identified in this AD from General Electric Company via Lockheed Martin Technology Services, 10525 Chester Road, Suite C, Cincinnati, Ohio 45215, telephone (513) 672–8400, fax (513) 672–8422.

You may examine the AD docket on the Internet at *http://dms.dot.gov* or in Room PL–401 on the plaza level of the Nassif Building, 400 Seventh Street, SW., Washington, DC.

**FOR FURTHER INFORMATION CONTACT:** James Lawrence, Aerospace Engineer, Engine Certification Office, FAA, Engine and Propeller Directorate, 12 New England Executive Park, Burlington, MA 01803; telephone (781) 238–7176; fax (781) 238–7199.

**SUPPLEMENTARY INFORMATION:** The FAA proposed to amend 14 CFR part 39 with a proposed AD. The proposed AD applies to GE CF6–80C2 series turbofan engines. We published the proposed AD in the **Federal Register** on December 13, 2006 (71 FR 74873). That action proposed to require replacing certain installed part number (P/N) and serial number (SN) cast titanium weld-repaired forward engine mount platforms and cast titanium forward mount yokes, with a forged titanium or a non-welded cast titanium part.

**Examining the AD Docket**

You may examine the docket that contains the AD, any comments received, and any final disposition in person at the Docket Management Facility between 9 a.m. and 5 p.m., Monday through Friday, except Federal holidays. The Docket Office (telephone (800) 647–5227) is located on the plaza level of the Department of Transportation Nassif Building at the street address stated in **ADDRESSES**.

Comments will be available in the AD docket shortly after the DMS receives them.

**Comments**

We provided the public the opportunity to participate in the development of this AD. We have considered the comments received.

**Add Airbus A310 and MD–11 Airplanes to the Applicability**

Commenters from Lufthansa Technik, KLM Royal Dutch Airlines, Airbus and Alitalia state that this AD is also applicable to the engines installed in the A310 and MD–11 airplanes. We agree. We inadvertently omitted the Airbus A310 and MD–11 airplanes from the Applicability section of the proposed rule. These airplanes are included in the Applicability section of the AD.

**Reference GE Service Bulletins**

Commenters from Lufthansa Technik, KLM Royal Dutch Airlines, Airbus and Alitalia also state that because the AD mandates requirements contained in GE Service Bulletins, CF6–80C2 S/B 72–1206 and CF6–80C2 S/B 72–1207, the FAA should reference the service bulletins in the final rule. We agree. The service bulletins' accomplishment instructions contain information such as applicable Aircraft Maintenance Manual sections that would clarify requirements of the AD. A reference to the service bulletins is included in the Related Information Section of the AD.

**Location of Weld Repair**

Representatives from Lufthansa Technik and KLM Royal Dutch Airlines note that paragraph (h) of the applicability section identifies a weld repair in a redundant area of the yoke, but Table 3 identifies the weld repair in a non-redundant area of the yoke. The FAA needs to correct this inconsistency in the final rule. We agree and have changed the heading of Table 3 to read, ''Weld-Repaired Forward Engine Mount Yokes Requiring Replacement That Have a Weld Repair in a Redundant Area of the Yoke.''

**Conclusion**

We have carefully reviewed the available data, including the comments received, and determined that air safety and the public interest require adopting the AD with the changes described previously. We have determined that these changes will neither increase the economic burden on any operator nor increase the scope of the AD.

**Costs of Compliance**

There are 25 engines in service that contain the substandard forward engine mount platforms and 59 engines in service that contain the substandard forward engine mount yokes. We estimate that this proposed AD would affect 84 CF6–80C2 engines installed on airplanes of U.S. registry. We estimate that it would take 34 work-hours per engine to replace the weld-repaired cast titanium forward engine mount platforms and the weld-repaired cast titanium forward engine mount yokes. The average labor rate is $80 per work-hour. Required forward engine mount parts would cost about $12,168 per engine. Required forward engine mount yoke parts would cost about $39,560 per engine. Based on these figures, we estimate the total cost of the proposed AD to U.S. operators to be $2,866,720.

**Authority for This Rulemaking**

Title 49 of the United States Code specifies the FAA's authority to issue rules on aviation safety. Subtitle I, section 106, describes the authority of the FAA Administrator. Subtitle VII, Aviation Programs, describes in more detail the scope of the Agency's authority.

We are issuing this rulemaking under the authority described in subtitle VII, part A, subpart III, section 44701, ''General requirements.'' Under that section, Congress charges the FAA with promoting safe flight of civil aircraft in air commerce by prescribing regulations for practices, methods, and procedures the Administrator finds necessary for safety in air commerce. This regulation is within the scope of that authority because it addresses an unsafe condition that is likely to exist or develop on products identified in this rulemaking action.

**Regulatory Findings**

We have determined that this AD will not have federalism implications under Executive Order 13132. This AD will not have a substantial direct effect on the States, on the relationship between the national government and the States, or on the distribution of power and responsibilities among the various levels of government.

For the reasons discussed above, I certify that this AD:

(1) Is not a ''significant regulatory action'' under Executive Order 12866;

(2) Is not a ''significant rule'' under DOT Regulatory Policies and Procedures (44 FR 11034, February 26, 1979); and

(3) Will not have a significant economic impact, positive or negative, on a substantial number of small entities under the criteria of the Regulatory Flexibility Act.

We prepared a summary of the costs to comply with this AD and placed it in the AD Docket. You may get a copy of this summary at the address listed under **ADDRESSES**.

**List of Subjects in 14 CFR Part 39**

Air transportation, Aircraft, Aviation safety, Safety.

**Adoption of the Amendment**

■ Accordingly, under the authority delegated to me by the Administrator, the Federal Aviation Administration amends 14 CFR part 39 as follows:

## PART 39—AIRWORTHINESS DIRECTIVES

■ 1. The authority citation for part 39 continues to read as follows:

**Authority:** 49 U.S.C. 106(g), 40113, 44701.

**§ 39.13 [Amended]**

■ 2. The FAA amends § 39.13 by adding the following new airworthiness directive:

**2007–05–14 General Electric Company:** Amendment 39–14975. Docket No. FAA–2006–23871; Directorate Identifier 2006–NE–01–AD.

**Effective Date**

(a) This airworthiness directive (AD) becomes effective April 9, 2007.

**Affected ADs**

(b) None.

**Applicability**

(c) This AD applies to the following General Electric Company (GE) turbofan engines with cast titanium assembly engine mount platforms part numbers (P/Ns) 1292M13G06, 1301M28G08, 1459M70G07, and 1846M24G04 and cast titanium assembly engine mount yokes P/Ns 9383M43G14 and 9383M43G16 installed.

CF6–80C2A1
CF6–80C2A2
CF6–80C2A3
CF6–80C2A5
CF6–80C2A8
CF6–80C2A5F
CF6–80C2B1
CF6–80C2B2
CF6–80C2B4
CF6–80C2B6
CF6–80C2B1F
CF6–80C2B2F
CF6–80C2B4F
CF6–80C2B5F
CF6–80C2B6F
CF6–80C2B6FA
CF6–80C2B7F
CF6–80C2B8F
CF6–80C2D1F

These engines are installed on, but not limited to, Boeing 747, Boeing 767, MD–11 and Airbus A300–600 and A310 airplanes.

**Unsafe Condition**

(d) This AD results from the discovery of cracks in a forward engine mount platform and a forward engine mount yoke found during fluorescent penetrant inspection (FPI). We are issuing this AD to prevent cracks in the forward engine mount platform and forward engine mount yoke that could result in possible separation of the engine from the airplane.

**Compliance**

(e) You are responsible for having the actions required by this AD performed within the compliance times specified unless the actions have already been done.

**P/N and SN Weld-Repaired Forward Engine Mount Platforms and Forward Engine Mount Yokes Requiring Replacement**

(f) Table 1 of this AD lists the P/Ns and serial numbers (SNs) of the weld-repaired forward engine mount platforms that have a weld repair in a non-redundant area of the mount and must be replaced.

TABLE 1.—WELD-REPAIRED FORWARD ENGINE MOUNT PLATFORMS REQUIRING REPLACEMENT THAT HAVE A WELD REPAIR IN A NON-REDUNDANT AREA OF THE MOUNT

| P/Ns | SNs |
|---|---|
| 1292M13G06 or 1846M24G04 | WACHH228 |
| | WACHH254 |
| | WACHH285 |
| | WACHH290 |
| | WACHH292 |
| | WACHH295 |
| | WACHH299 |
| | WACHH384 |
| | WACHH427 |
| | WACHH440 |
| | WACHH604 |
| 1301M28G08 | WACAR292 |
| | WACAR354 |

(g) Table 2 of this AD lists the P/Ns and SNs of the weld-repaired forward engine mount platforms that have a weld repair in a redundant area of the mount. Because it is impossible to detect whether the mount is operating on the redundant feature, each of these mounts must be replaced. The compliance time for mounts in this category can be longer than for the mounts listed in Table 1 of this AD.

TABLE 2.—WELD-REPAIRED FORWARD ENGINE MOUNT PLATFORMS REQUIRING REPLACEMENT THAT HAVE A WELD REPAIR IN A REDUNDANT AREA OF THE MOUNT

| P/Ns | SNs |
|---|---|
| 1292M13G06 or 1846M24G04 | WACHH173 |
| | WACHH189 |
| | WACHH274 |
| | WACHH278 |
| | WACHH314 |
| | WACHH325 |
| | WACHH486 |

TABLE 2.—WELD-REPAIRED FORWARD ENGINE MOUNT PLATFORMS REQUIRING REPLACEMENT THAT HAVE A WELD REPAIR IN A REDUNDANT AREA OF THE MOUNT—Continued

| P/Ns | SNs |
|---|---|
| 1301M28G08 | WACAR294 |
| | WACAR304 |
| | WACAR353 |
| | WACAR372 |
| 1459M70G07 | MTXT1282 |

(h) Table 3 of this AD lists the P/Ns and SNs of the weld-repaired forward engine mount yokes that have a weld repair in a redundant area of the yoke. Because it is impossible to detect whether the mount yoke is operating on the redundant feature, each of these mount yokes must be replaced. The compliance time for mounts in this category can be longer than for the mounts listed in Table 1 of this AD.

TABLE 3.—WELD-REPAIRED FORWARD ENGINE MOUNT YOKES REQUIRING REPLACEMENT THAT HAVE A WELD REPAIR IN A REDUNDANT AREA OF THE YOKE

| P/Ns | SNs |
|---|---|
| 9383M43G14 | WACV0388 |
| | WACV0394 |
| | WACV0405 |
| | WACV0406 |
| | WACV0477 |
| | WACV0498 |
| | WACV0529 |
| | WACV0556 |
| | WACV0579 |
| | WACV0581 |
| | WACV0582 |
| | WACV0600 |
| | WACV0605 |
| | WACV0617 |
| | WACV0625 |
| | WACV0627 |
| | WACV0633 |
| | WACV0645 |
| | WACV0683 |
| | WACV0703 |
| | WACV0733 |
| | WACV0737 |
| | WACV0759 |
| | WACV0775 |
| | WACV0791 |
| | WACV0799 |
| | WACV0875 |
| | WACV0883 |
| | WACV0885 |
| | WACV0909 |
| | WACV1097 |
| | WACV1615 |
| | WACV1713 |
| | WACV1753 |
| | WACV1797 |
| | WACV1867 |
| | WACV1987 |
| | WACV2131 |
| | WACV2159 |
| | WACV2185 |
| | WACV2343 |

TABLE 3.—WELD-REPAIRED FORWARD ENGINE MOUNT YOKES REQUIRING REPLACEMENT THAT HAVE A WELD REPAIR IN A REDUNDANT AREA OF THE YOKE—Continued

| P/Ns | SNs |
|---|---|
| | WACV2511 |
| | WACV2695 |
| | WACV2707 |
| | WACV2881 |
| | WACV2899 |
| 9383M43G16 | WACV0511 |
| | WACV0515 |
| | WACV0518 |
| | WACV0540 |
| | WACV0542 |
| | WACV0571 |
| | WACV0689 |
| | WACV0721 |
| | WACV0727 |
| | WACV0730 |
| | WACV0786 |
| | WACV0816 |
| | WACV0954 |

(i) GE advises that forward engine mount platform, P/Ns 1292M13G06 and 1846M24G04, are the same, except that P/N 1846M24G04 incorporates a previously approved field rework. This rework allows the thrust pin hole in the forward engine mount platform to be bored out to accept installation of an oversized thrust pin. GE cannot identify which SN goes with which P/N, but all SNs are affected.

**Welded Cast Titanium Forward Engine Mount Platform and Forward Engine Mount Yoke Removal**

(j) If the P/N and SN of the forward engine mount platform listed in Table 1 and Table 2 and the forward engine mount yoke listed in Table 3 of this AD are not installed on the engine, no further action is necessary.

(k) If the P/N and SN of the forward engine mount platform listed in Table 1 of this AD is installed on the engine:

(1) Remove the forward engine mount platform from the engine within 500 cycles or 6 months, after the effective date of this AD, whichever occurs first.

(2) Information for removal of the forward engine mount platform from the engine can be found in the CF6–80C2 Engine Manual, 72–00–01, Disassembly.

(l) If the P/N and SN of the forward engine mount platform listed in Table 2 of this AD is installed on the engine:

(1) Remove the forward engine mount platform at the next shop visit, or within 4,800 cycles after the effective date of this AD, whichever occurs first.

(2) Information for removal of the forward engine mount yoke can be found in the CF6–80C2 Engine Manual, 72–00–01, Disassembly.

(m) If the P/N and SN of the forward engine mount yoke listed in Table 3 of this AD is installed on the engine:

(1) Remove the forward engine mount yoke at the next shop visit, or within 4,800 cycles after the effective date of this AD, whichever occurs first.

(2) Information for removal of the forward engine mount yoke can be found in the CF6–80C2 Engine Manual, 72–00–01, Disassembly.

(n) Replace the affected forward engine mount platform and or the affected forward engine mount yoke with a non-weld-repaired cast titanium forward engine mount platform and or the forward engine mount yoke or a forged titanium forward engine mount platform or a forged titanium forward engine mount yoke.

(o) Information for installing the forward engine mount platform and forward engine mount yoke can be found in the CF6–80C2 Engine Manual, 72–00–01, Assembly.

(p) Location of the forward engine mount platform and forward engine mount yoke and SN are illustrated in the following Figure 1.

BILLING CODE 4910–13–P

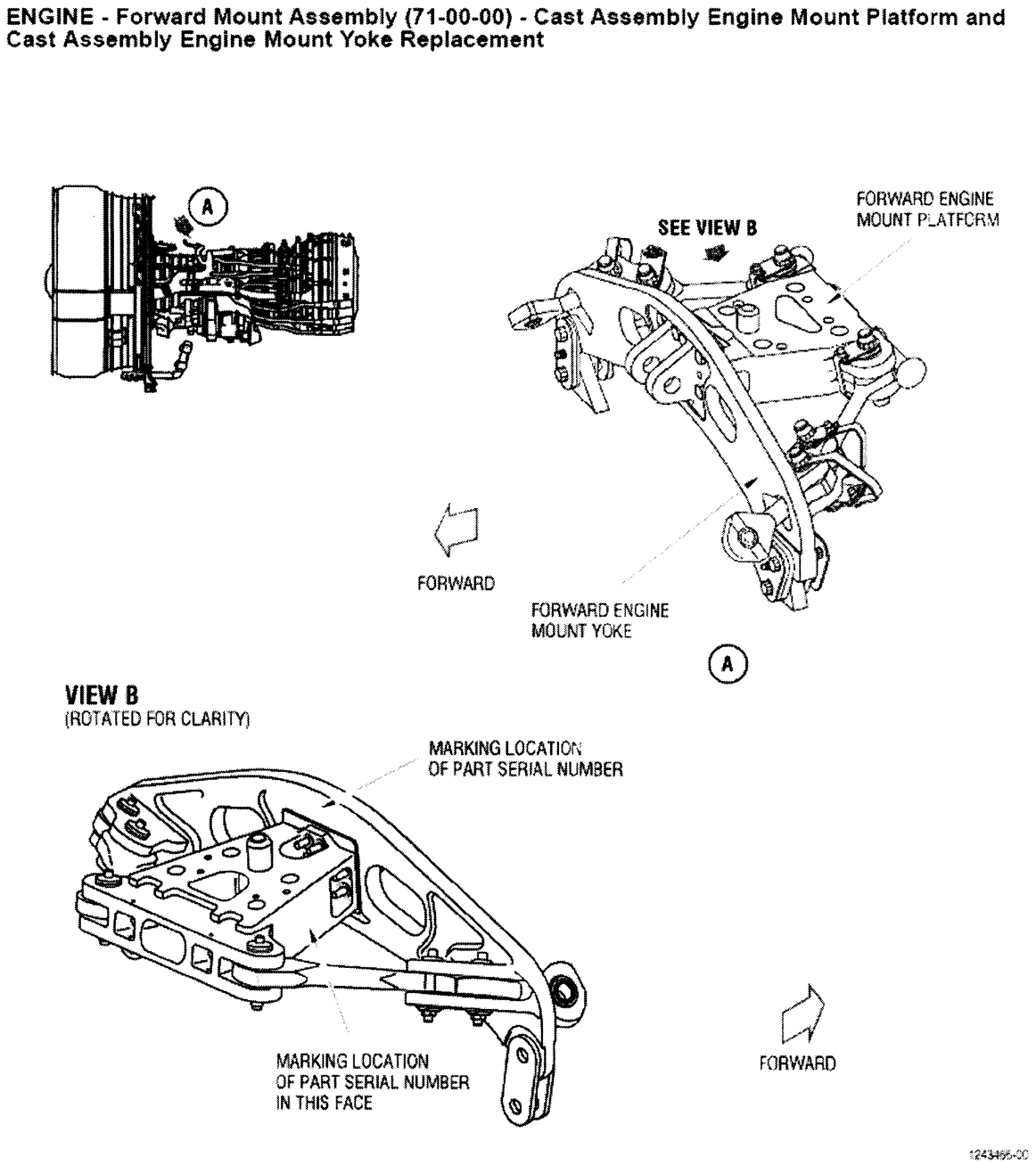


Location of Forward Engine Mount Platform and Forward Engine Mount Yoke
Figure 1

(q) After the effective date of this AD, do not install a weld-repaired, cast forward engine mount platform or a weld-repaired, cast forward engine mount yoke in any engine.

**Alternative Methods of Compliance**

(r) The Manager, Engine Certification Office, has the authority to approve alternative methods of compliance for this AD if requested using the procedures found in 14 CFR 39.19.

**Related Information**

(s) Contact James Lawrence, Aerospace Engineer, Engine Certification Office, FAA, Engine and Propeller Directorate, 12 New England Executive Park, Burlington, MA 01803; telephone (781) 238–7176; fax (781)

238–7199 for more information about this AD.

(t) General Electric Company Service Bulletins CF6–80C2 S/B 72–1206, dated December 23, 2005, and CF6–80C2 S/B 72–1207, Revision 01, dated July 05, 2006, pertain to the subject of this AD.

Issued in Burlington, Massachusetts, on February 27, 2007.

**Peter A. White,**

*Acting Manager, Engine and Propeller Directorate, Aircraft Certification Service.*

[FR Doc. 07–986 Filed 3–2–07; 8:45 am]

**BILLING CODE 4910–13–P**

---

## DEPARTMENT OF TRANSPORTATION

## Federal Aviation Administration

## 14 CFR Part 39

**[Docket No. FAA–2006–26378; Directorate Identifier 2006–NM–230–AD; Amendment 39–14972; AD 2007–05–11]**

**RIN 2120–AA64**

## Airworthiness Directives; Bombardier Model CL–600–2B16 (CL–604) Airplanes and Model CL–600–2B19 (Regional Jet Series 100 & 440) Airplanes

**AGENCY:** Federal Aviation Administration (FAA), Department of Transportation (DOT).

**ACTION:** Final rule; request for comments.

**SUMMARY:** The FAA is superseding two existing airworthiness directives (ADs), that apply to certain Bombardier Model CL–600–2B16 (CL–604) airplanes and Model CL–600–2B19 (Regional Jet Series 100 & 440) airplanes. These models may be referred to by their marketing designations as RJ100, RJ200, RJ440, CRJ100, CRJ200, CRJ440, and CL–65. One existing AD requires replacing the horizontal stabilizer trim control unit (HSTCU) with a new HSTCU. The other existing AD requires revising the airplane flight manual (AFM) to advise the flightcrew of procedures to follow in the event of stabilizer trim runaway, and in the event of MACH TRIM, STAB TRIM, and horizontal stabilizer trim malfunctions; and revising the AFM to require a review of the location of certain circuit breakers. That AD also requires doing a functional check of the stabilizer trim system and installing circuit breaker identification collars, and provides an optional terminating action. This new AD requires the previously optional terminating action and requires further revisions to the AFM. This AD also requires the removal of certain AFM revisions. This AD results from reports of trim problems including uncommanded trim, trim in the opposite direction to that selected, loss of trim position indication and, in one case, potential loss of trim disconnect capability. We are issuing this AD to prevent these events, which could result in conditions that vary from reduced controllability of the airplane to loss of control of the airplane.

**DATES:** This AD becomes effective March 20, 2007.

The Director of the Federal Register approved the incorporation by reference of certain publications listed in the AD as of March 20, 2007.

On November 14, 2006 (71 FR 63219, October 30, 2006), the Director of the Federal Register approved the incorporation by reference of certain other publications.

On July 30, 1998 (63 FR 34574, June 25, 1998), the Director of the Federal Register approved the incorporation by reference of a certain other publication.

We must receive any comments on this AD by April 4, 2007.

**ADDRESSES:** Use one of the following addresses to submit comments on this AD.

- *DOT Docket Web site:* Go to *http://dms.dot.gov* and follow the instructions for sending your comments electronically.
- *Government-wide rulemaking Web site:* Go to *http://www.regulations.gov* and follow the instructions for sending your comments electronically.
- *Mail:* Docket Management Facility, U.S. Department of Transportation, 400 Seventh Street, SW., Nassif Building, Room PL–401, Washington, DC 20590.
- *Fax:* (202) 493–2251.
- *Hand Delivery:* Room PL–401 on the plaza level of the Nassif Building, 400 Seventh Street, SW., Washington, DC, between 9 a.m. and 5 p.m., Monday through Friday, except Federal holidays.

Contact Bombardier, Inc., Canadair, Aerospace Group, P.O. Box 6087, Station Centre-ville, Montreal, Quebec H3C 3G9, Canada, for service information identified in this AD.

You may examine the contents of the AD docket on the Internet at *http://dms.dot.gov,* or in person at the Docket Management Facility, U.S. Department of Transportation, 400 Seventh Street, SW., Room PL–401, on the plaza level of the Nassif Building, Washington, DC. This docket number is FAA–2006–26378; the directorate identifier for this docket is 2006–NM–230–AD.

**FOR FURTHER INFORMATION CONTACT:** Daniel Parrillo, Aerospace Engineer, Systems and Flight Test Branch, ANE–172, FAA, New York Aircraft Certification Office, 1600 Stewart Avenue, Suite 410, Westbury, New York 11590; telephone (516) 228–7305; fax (516) 794–5531.

**SUPPLEMENTARY INFORMATION:**

### Discussion

On October 13, 2006, the FAA issued a supplemental notice of proposed rulemaking (NPRM) to amend 14 CFR part 39 to include an AD that supersedes AD 2006–22–06, amendment 39–14803 (71 FR 63219, October 30, 2006). The existing AD applies to certain Bombardier Model CL–600–2B16 (CL–604) airplanes and Model CL–600–2B19 (Regional Jet Series 100 & 440) airplanes. That supplemental NPRM was published in the **Federal Register** on December 28, 2006 (71 FR 78096). That supplemental NPRM proposed to retain the requirements of AD 2006–22–06 and to require the previously optional terminating action (installation of a new horizontal stabilizer trim control unit (HSTCU)). That supplemental NPRM also proposed to require, for certain airplanes, re-inserting the applicable temporary revisions of the Emergency and Abnormal Procedures sections of the airplane flight manual (AFM) under certain conditions.

### Actions Since Supplemental NPRM Was Issued

Since we issued that supplemental NPRM, Bombardier has issued new temporary revisions (TRs) to the AFMs as described in a comment submitted by the National Transportation Safety Board (NTSB) (see ''Request to Revise AFM Procedures'' paragraph below). In the comment, the NTSB presents data to indicate that changes to the AFMs are necessary to address the identified unsafe condition. We have coordinated with Transport Canada Civil Aviation (TCCA) on this issue and concur that changes to the AFMs are necessary. In consideration of these new data, we have determined that the AFMs must be revised to include the new TRs within 14 days after the effective date of this AD.

The FAA finds that, with respect to this additional requirement, since a situation exists that requires immediate adoption of this requirement, notice and time for prior public comment hereon are impracticable, and good cause exists for making this amendment effective in less than 30 days. Therefore, this AD will include the requirements specified in the supplemental NPRM (except the proposed requirement to re-insert TRs to the AFMs), as well as the certain new requirements discussed below. The new requirements include revising the AFMs to include the new TRs. In addition, we

are superseding AD 98–13–24, amendment 39–10615 (63 FR 34574, June 25, 1998). See ''Request to Clarify Related AD'' paragraph below. This AD restates the requirement of AD 98–13–24 to install a certain HSTCU and specifies that doing the terminating action required by this new AD (installing a new HSTCU) terminates that earlier requirement.

**Comments**

We provided the public the opportunity to participate in the development of this AD. We have considered the comments that have been received.

**Request To Revise AFM Procedures**

The NTSB requests that we revise the AFM procedures specified in the supplemental NPRM. The NTSB notes that the supplemental NPRM states that AD 2006–22–06 requires and the supplemental NPRM proposes to require:

- Revising the Emergency and Abnormal Procedures sections of the AFM to advise flight crews of procedures to follow in the event of MACH TRIM, STAB TRIM, and horizontal stabilizer trim malfunctions;
- Revising the Normal section of the AFM to require a review of the location of certain circuit breakers and a functional check of the stabilizer trim system [required only by AD 2006–22–06]; and
- Installing circuit breaker identification collars [required only by AD 2006–22–06].

The NTSB summarizes the guidance provided to pilots in the revised Emergency Procedures section as follows:

- Assume manual control of the control column and override the runaway.
- Press, hold, and release the STAB TRIM disconnect switch.
- If trim motion continues, pull the circuit breakers.

Based on the examination of corroded motherboards and findings during the investigations of the three previous incidents, the NTSB believes that the revised AFM procedures should emphasize that, likely in all cases, an uncommanded movement of the horizontal stabilizer trim is a result of a short-circuit of the first officer's trim circuits. In addition, because the circuit breakers are accessible only to the first officer in Model CL–600–2B16 airplanes, the NTSB suggests that the Emergency Procedures be revised to indicate that control should be immediately transferred to the captain's controls to arrest the runaway trim with the captain's trim switch. Finally, because the only way to arrest a failure mode that occurred only with the trim channels disengaged was to pull the circuit breakers, the NTSB suggests that the procedures should emphasize pulling the circuit breakers if the trim channels are disengaged.

We agree that the AFM should be revised. However, we disagree with the emphasis on trying to disengage the trim on the captain's side. We consider that it is possible to have contamination on the left- or right-hand side; therefore, both sides should attempt a disengagement.

We agree that control must be transferred to the left-hand side to facilitate access to the circuit breakers on the right-hand side. However, we consider that the first priority, after regaining control by the pilot flying, is to disconnect the system using the disconnect switches, and that control be passed to the left-hand side subsequent to this step.

We disagree with the suggestion to use the captain's trim switch to arrest the trim runaway. There have been cases identified of motherboard short circuits where operation of the trim switch would not arrest the runaway. Given the minimal time available to arrest a runaway, priority must be given to the most probable means of arresting the surface motion. These priorities are, first the control column disconnect switches, and second, the circuit breakers.

We also disagree with depending on the Engaged/Disengaged trim channels annunciation to pull the circuit breakers. Instead, the AFM will be changed to remove such reference from the procedure and require that the circuit breakers be pulled in all cases.

We agree to change the AFM procedure to reflect the changes below:

- Control column—Assume manual control and override runaway.
- Both STAB TRIM Disconnect switches—Press, hold and release.
- Control—Transfer to pilot (LH) side.
- STAB CH 1 and CH 2 HSTCU circuit breakers—Open.

The above procedures will be included as memory/immediate action items.

Bombardier has issued and we have reviewed the temporary revisions (TRs) specified in the table below.

TABLE—TRS

| For Bombardier Model— | Use— | Dated— | To the— |
|---|---|---|---|
| CL–600–2B16 (CL–604) airplanes | Canadair Challenger TR 604/21–2 | January 30, 2007 | Canadair Challenger CL–604 AFM, PSP 604–1. |
| CL–600–2B19 (Regional Jet Series 100 & 440) airplanes. | Canadair Regional Jet TR RJ/152–6. | January 26, 2007 | Canadair Regional Jet AFM, CSP A–012. |

TR 604/21–2 supersedes Canadair Challenger TR 604/21–1, dated October 3, 2006, and TR RJ/152–6 supersedes Canadair Regional Jet TR RJ/152–5, dated October 3, 2006. Both TRs describe revising the Emergency and Abnormal Procedures sections of the applicable AFM to advise the flightcrew of additional procedures to follow in the event of stabilizer trim runaway and to advise the flightcrew of revised procedures to follow in the event of MACH TRIM, STAB TRIM, and horizontal stabilizer trim malfunctions.

The new TRs must be inserted into the applicable AFM within 14 days after the effective date of this AD. We have determined that this revision is necessary to address uncommanded trim, trim in the opposite direction to that selected, loss of trim position indication and, in one case, potential loss of trim disconnect capability, which could result in conditions that vary from reduced controllability of the airplane to loss of control of the airplane. We have also determined that this revision provides a much more efficient procedure and a significant improvement for recovery from the stated unsafe condition. We have coordinated with TCCA on this issue. We have added paragraphs (m) and (n) of this AD accordingly to incorporate these AFM revisions.

We have also removed the ''Reinsert AFM Revisions'' paragraph from this AD (paragraph (n) of the supplemental NPRM). Because this AD requires new AFM revisions, operators do not need to reinsert the old AFM revisions that may

have been removed in accordance with AD 2006–22–06.

**Request To Clarify the Unsafe Condition**

The NTSB requests that we clarify the unsafe condition to state accurately the potential severity of uncommanded motion of the horizontal stabilizer trim on the affected airplanes. The NTSB states that the severity can range from major to catastrophic, based on the assessment of airplane performance under various runaway stabilizer trim conditions and the circumstances of the three recent reported incidents.

The NTSB states that pilots from Bombardier Flight Test, TCCA, the FAA, and the NTSB have performed a comprehensive assessment of Model CL–600–2B16 and CL–600–2B19 airplane performance under various runaway stabilizer trim conditions using full flight simulators, desktop simulations, and test airplanes. The NTSB notes that the consensus from those efforts is that, depending on the nature of the runaway condition, the risk assessment can range from major to catastrophic.

The NTSB also notes that the variables that affect the operational safety risk are the direction of the trim runaway, the ability to disconnect or override the trim, and whether the runaway is intermittent or constant. The NTSB states that the worst-case scenario (resulting in complete loss of airplane control) would be a constant trim runaway in the nose-up direction without the ability to disconnect or override the trim, and at the other end of the hazard assessment is an intermittent runaway trim in the nose-down direction with the ability to disconnect and override the trim. The NTSB has determined that the intermittent runaway trim scenario, if managed properly with no other extenuating circumstances, could be relatively benign; however, the NTSB explains that functional capabilities would still be reduced while crew workload and distress would increase, potentially affecting the crew's performance of other tasks. The NTSB concludes that this condition could end catastrophically if managed poorly or if other factors, such as weather, traffic, or other system failures, complicate operations.

We agree to clarify the unsafe condition specified in this AD for the reasons provided by the NTSB. We have revised the unsafe condition in the Summary and paragraph (d) of this AD to read:

This AD results from reports of trim problems including uncommanded trim, trim in the opposite direction to that selected, loss of trim position indication and, in one case, potential loss of trim disconnect capability. We are issuing this AD to prevent these events, which could result in conditions that vary from reduced controllability of the airplane to loss of control of the airplane.

**Request To Clarify Related AD**

Comair also requests that we clarify whether this supplemental NPRM supersedes AD 98–13–24. Comair asks if the following requirement for certain airplanes in AD 98–13–24 also applies to the supplemental NPRM: ''replace the HSTCU with a new HSTCU having part number 601R92301–9.'' Comair points out that AD 98–13–24 does not acknowledge replacing with a higher dash number (the supplemental NPRM specifies, and this new AD requires, replacement with a HSTCU having part number 601R92301–15 or higher dash number).

We acknowledge the need to clarify how AD 98–13–24 relates to this AD. AD 98–13–24, which applies to Model CL–600–2B19 (Regional Jet Series 100 & 440) airplanes, serial numbers 7003 through 7112 inclusive, requires the installation of the HSTCU, part number (P/N) 601R92301–9, within 18 months after the effective date of that AD as a terminating action for other actions specified in that AD. Since AD 98–13–24 became effective on July 30, 1998, all Model CL–600–2B19 (Regional Jet Series 100 & 440) airplanes in the United States are required to be in compliance. If any airplane is imported, it must be in compliance with all applicable ADs, including AD 98–13–24.

As this new AD requires the replacement of a part already cited in AD 98–13–24, we determined that this could lead to confusion regarding applicability and result in unnecessary record keeping. This new AD requires that the HSTCU be replaced with a higher part number (HSTCU P/N 601R92301–15 or higher dash number).

Therefore, we have determined that this AD should supersede AD 98–13–24 as well as AD 2006–22–06 (the supplemental NPRM proposed to supersede AD 2006–22–06). We have revised paragraph (b) of this AD to read:

''This AD supersedes AD 98–13–24 and AD 2006–22–06.''

We have also restated the requirements of paragraph (b) of AD 98–13–24 as paragraph (f) of this AD. We have revised the remaining paragraph identifiers accordingly.

All of the airplanes on the U.S. Register affected by AD 98–13–24 are already in compliance with the actions required by AD 98–13–24; therefore, the requirements and costs to U.S. operators described in the supplemental NPRM will not change. We have determined that providing notice and opportunity for public comment on superseding AD 98–13–24 is unnecessary before this AD is issued.

**Requests To Extend Compliance Time**

The Regional Airline Association (RAA), on behalf of its members Air Wisconsin, Mesa Airlines, PSA Airlines, and Comair, requests that we extend the 9-month compliance time for the terminating action to read, ''within 12 months after the effective date of this AD.'' RAA notes that TCCA mandated a 12-month retrofit from the TCCA airworthiness directive's published date in October but the TCCA's airworthiness directive is applicable only to the relatively small fleet of Model CL–600–2B19 (Regional Jet Series 100 & 440) airplanes that operate in Canada. RAA recommends that we consult with Sagem (the parts manufacturer) to finalize our decision on a suitable compliance period and to consider that the airworthiness concern has never occurred within the regional fleet, and interim operational measures are currently in effect.

Mesa Airlines states there have been no documented failures on the Model CL–600–2B19 (Regional Jet Series 100 & 440) airplanes and that the newly imposed circuit breaker identification and AFM revision will preclude an unlikely failure from becoming an incident. Mesa Airlines recommends that 6 months be added to the compliance time for these airplanes.

Air Wisconsin concurs with the comments from Mesa Airlines. Air Wisconsin states that it doubts that the parts schedule will be able to be maintained and notes that an optimistic parts schedule issued by Bombardier will have the operator installing parts into October 2007. PSA Airlines agrees with Mesa Airlines and Air Wisconsin that the 9-month compliance time is not realistic.

Comair requests that we contact Bombardier and Sagem to determine if the schedule is realistic and will not place an undue burden on the operators. Comair notes that it has received units that failed prior to first flight and that these occurrences are not allotted for in the delivery schedule. Comair also states that it is nine units behind in receiving upgraded units based on the proposed shipping schedule.

We disagree, because in developing an appropriate compliance time for this action, we considered the urgency associated with the subject unsafe condition, the availability of required

parts, and the practical aspect of accomplishing the required installation within a period of time that corresponds to the normal scheduled maintenance for most affected operators. According to Bombardier, enough required parts will be available to modify the U.S. fleet within the proposed compliance time. However, according to the provisions of paragraph (q) of this AD, we may approve requests to adjust the compliance time if the request includes data that prove that the new compliance time would provide an acceptable level of safety. We have not revised this AD in this regard.

**Request To Reduce Compliance Time**

The NTSB requests that we reduce the 9-month compliance time to do the terminating action specified in supplemental NPRM. The NTSB is concerned that this compliance time may not sufficiently protect the fleet of affected airplanes from this hazardous condition. The NTSB notes that although the three previous in-flight incidents all involved Model CL–600–2B16 airplanes, a review of FAA service difficulty reports (SDR) for Bombardier CRJ 100/200 airplanes revealed more than 500 anomalies with stabilizer trim in the last six years, including at least eight reports of uncommanded movement of the horizontal stabilizer that were reported in that time.

The NTSB received statistics from the HSTCU manufacturer (Sagem Avionics, Inc.) that showed an average return rate of approximately 425 HSTCUs per year with approximately 10 percent of HSTCU motherboards found to have some level of corrosion. The NTSB states that none of these boards had corrosion on the specific pins that control the captain's trim commands, which is significant because in the event of a trim runaway, a command from the captain's trim switch could override an uncommanded trim movement caused by the first officer's circuits.

The NTSB states that various short-circuit scenarios were then extensively tested and that for every scenario tested (except for one), the captain's trim switch could be used to arrest or override a runaway trim. The NTSB notes that analysis of this condition to date suggests that any of the motherboards could be affected by corrosion and that corrosion can usually only be detected by disassembly of the HSTCU. The NTSB points out that HSTCUs with extensively corroded motherboards have passed built-in-test-equipment tests, as well as the manufacturer's acceptance test procedure, which could result in faulty HSTCUs not being removed from service. The NTSB adds that the boards examined were not cleaned sufficiently following the manufacturing process, which, in conjunction with sufficient moisture by condensation, could result in corrosion and pin-to-pin shorting and lead to trim runaway or several less significant anomalies. The NTSB states that the sampling of corroded boards would suggest that perhaps 50 airplanes are currently operating with contaminated motherboards, which, when coupled with sufficient moisture, will cause malfunctions. Data evaluated so far by NTSB investigators suggests that corrosion-induced runaway events occur randomly, independent of the age of the affected motherboard.

The NTSB notes that a continuing airworthiness assessment performed by Bombardier estimated the probability of the corrosion failure mode causing uncommanded continuous trim movement at full speed of the horizontal stabilizer without disconnect capability to be $7.6 \times 10^{-8}$ per flight hour. However, the NTSB believes that, regardless of trim runaway direction or disconnect capability, any uncommanded runaway event presents the flight crew with a hazardous situation that, depending on other operational factors, may result in an accident. Accordingly, using the three in-flight incidents, the eight events from the SDR database, and the combined fleet history of 13 million flight hours, the NTSB believes a more conservative estimate of incident probability is $8.5 \times 10^{-7}$ per flight hour. The NTSB believes that this estimate may be optimistic considering it is likely that more of the SDRs were actually trim runaway events that were not correctly diagnosed. The NTSB states that data provided by Bombardier indicates that the average combined fleet utilization is 2.8 million flight hours per year. The NTSB considers that the fleet may accumulate this number of flight hours over the AD compliance interval and therefore as many as two uncommanded runaway events could be expected to occur before the proposed AD is fully complied with. Even with this more conservative estimate, the NTSB notes that the three in-flight events have occurred very recently in the fleet's 13-million-flight-hour history, which suggests that some of the factors driving uncommanded trim events may not have been present or consistent over the entire history. Therefore, the NTSB concludes that the true probability of future events, in particular over the compliance period, is difficult to estimate accurately.

The NTSB states that it is aware that Bombardier has been working with the HSTCU manufacturer to accelerate hardware production in regards to this AD. However, the NTSB is concerned that the FAA's proposed compliance time is formulated based on the quoted production rate and that uncertainty about the safety risk warrants priority consideration. Therefore, the NTSB strongly encourages the FAA to consider a shorter compliance time that provides reasonable assurance that the corrective action will be fully implemented without risking additional runaway events.

We disagree with the request to reduce the compliance time because in developing an appropriate compliance time for this action, we considered the urgency associated with the subject unsafe condition, the availability of required parts, and the practical aspect of accomplishing the required installation within a period of time that corresponds to the normal scheduled maintenance for most affected operators. The FAA's and TCCA's harmonized position is that the stated compliance time of 9 months strikes the correct balance of risk mitigation. Bombardier has committed to the delivery of modified HSTCUs to meet this schedule. Any shortening of the compliance time may result in fleet groundings since there will not be sufficient modified HSTCUs available. However, as stated previously, we have revised the AFM procedures to provide a much more efficient procedure and a significant improvement for recovery from the stated unsafe condition.

**Request To Remove First Flight of Day Functional Test**

Air Wisconsin requests that we remove the requirement for the airplane's first flight of the day functional test specified in the supplemental NPRM. The commenter states that the requirement was removed from the AFM at Revision 55 in July 2001 and therefore, there was no requirement to do this action for over 5 years until it was again required by AD 2006–22–06. The commenter notes that the terminating action in the supplemental NPRM allows operators to remove the temporary revision to abnormal procedures and the circuit breaker identification collars. The commenter concludes that the requirement for a daily functional test should be removed because the supplemental NPRM does not contain justification for retaining the test.

We partially agree. We intended in AD 2006–22–06 for the first flight of the day check of the pitch trim disconnect switch to give crews a way to know daily that the disconnect switch is available and functional, because use of

the pitch trim disconnect can significantly mitigate the severity of uncommanded trim movement. Installing the modified HSTCUs required by this AD is terminating action for certain actions in AD 2006–22–06 and mitigates the higher risk of uncommanded movement. Therefore, the functional test is not necessary because the replacement has already mitigated the risks.

We have revised this AD to remove the requirement for this functional test in the Model CL–600–2B19 (Regional Jet Series 100 & 440) airplanes. Therefore, we have revised paragraph (o)(1) of this AD to require the removal of the AFM revisions required by paragraphs (j) and (k) of this AD after the installation required by paragraph (o) of this AD is done. Model CL–600–2B19 (Regional Jet Series 100 & 440) airplanes have had a history of pitch trim disconnect switch failures, which cause loss of both Channel 1 and 2 with resultant loss of pitch trim. We have been advised that exercising the switch increases wear and induces additional failures. That is the reason why this check was removed from the Canadair Regional Jet AFM at an earlier date. The Stab Trim System Reliability including switch reliability is covered in FAA Safety Recommendation 04.093. We have been strongly recommending a new switch, or a life limit on the existing switch, as well as other system improvements. Since Model CL–600–2B16 (CL–604) airplanes incur much less usage than Model CL–600–2B19 (Regional Jet Series 100 & 440) airplanes, switch wear is not considered a driver and hence the Stab Trim Check was recommended for the Model CL–600–2B16 (CL–604) airplanes.

Also, since the Model CL–600–2B16 (CL–604) fleet already contains this functional test in its airplane flight manual, it will be recommended but not mandated that Model CL–604 crews continue to perform this functional test. Therefore, we have added a note after paragraph (o)(1) of this AD stating:

> It is recommended for Model CL–600–2B16 (CL–604) operators that the functional check of the stabilizer trim system on the aircraft's first flight of the day continue to be performed in accordance with the Normal Procedures Section of the Canadair Challenger CL–604 AFM.

**Request for Alternative Method of Compliance**

Comair requests that we provide an alternative method of compliance for the actions specified in paragraph (l) of the supplemental NPRM. Comair notes that paragraph (l) specifies to do the installation, for certain airplanes, in accordance with Bombardier Service Bulletin 601R–27–147, dated September 28, 2006, and paragraph B.(2) of the Accomplishment Instructions of the service bulletin specifies to do Sagem Service Bulletin HSTCU–27–011. Comair states that operators cannot ''do'' the Sagem service bulletin because units must be returned to Sagem for the upgrade. Comair states that this makes the installation a replacement of the HSTCU with the upgraded HSTCU. Comair states that the airplane maintenance manual (AMM) procedure for installation of the HSTCU, task 27–41–01–400–801, requires the same functional check and operational check called out in the referenced service bulletin. We infer that Comair requests that we refer to the AMM procedure as an alternative method of compliance.

We disagree. Operators are not required to do the Sagem service bulletin. Paragraph (o) of this AD (paragraph (l) in the supplemental NPRM) requires installing the HSTCU P/N 601R92301–15 (Vendor P/N 7060–10) or higher dash number in accordance with the Accomplishment Instructions of Bombardier Service Bulletin 601R–27–147 (for Model CL–600–2B19 (Regional Jet Series 100 & 440) airplanes). Although paragraph B.2 of the Accomplishment Instructions in Bombardier Service Bulletin 601R–27–147 states ''Do the Avionics service bulletin HSTCU–27–011,'' this AD requires only that the HSTCU be installed and does not require operators to perform the actual modifications.

In addition, we do not agree with referring to the AMM reference in this AD as a method of compliance for installing the modified HSTCU. The installation must be done in accordance with Bombardier Service Bulletin 601R–27–147. Bombardier Service Bulletin 601R–27–147 refers to the procedures in AMM 27–41–01–400–801 for the installation. Doing the procedures in any revision of the AMM is acceptable for complying with the installation requirements of this AD. In addition, according to the provisions of paragraph (q) of this AD, we may approve requests for alternative compliance methods if the request includes data that prove that the actions would provide an acceptable level of safety. We have not revised this AD in this regard.

**Request To Revise Cost Paragraph**

RAA also request that we revise the cost of the installation. RAA states that one of its members pointed out that the cost to upgrade to a unit ''−10'' is $15,000.

We do not agree to revise the cost of an upgrade to $15,000. Operators should note that when we calculate estimated costs, we do not consider job set up, close up, etc., to be part of the work hour calculation. Also, although the calculations in the supplemental NPRM used a figure of 11 work hours for installation, in fact, the only work hour numbers that should be used for the estimate should be 1 work hour for ''Procedure'' as specified in Bombardier Service Bulletin 601R–27–147. For the parts costs, we referred to the ''Material Information'' section in Sagem Service Bulletin HSTCU–27–011, dated September 22, 2006, which specifies a range from $0 to upgrade Sagem P/N 7060–9A that is under warranty up to $3,995 to upgrade a Sagem P/N 7060–8 or older version that is not under warranty. We have not revised this AD in this regard because the cost of compliance paragraph is not restated in this type of rulemaking action.

**Request To Disallow Removal of Circuit Breaker Collars**

The Air Line Pilots Association (ALPA) requests that we disallow the removal of the circuit breaker identification collars that is allowed in paragraph (l) of the supplemental NPRM (paragraph (o) of this AD). ALPA states that procedures in place at several carriers rely on the crew's ability to readily identify the circuit breakers, and the existing circuit breaker collars facilitate that procedure. ALPA expects that even with the improvement represented by the supplemental NPRM, the procedures will continue to remain available to crews, so leaving the collars in place represents a safety benefit.

We disagree because the wording in the AD allows for the removal of the collars but does not mandate the action. The circuit breaker collars were considered an interim action for quick identification in the case of runaway trim with an associated pitch trim system disconnect failure. The installation of the modified HSTCUs is considered terminating action for this risk. Therefore, we are not imposing the additional requirement for operators to maintain the circuit breaker collars after the installation has already mitigated the risks. We have not revised this AD in this regard.

**Conclusion**

We have carefully reviewed the available data, including the comments that have been received, and determined that air safety and the public interest require adopting the AD with the changes described previously.

**FAA's Determination and Requirements of This AD**

These airplanes are manufactured in Canada and are type certificated for operation in the United States under the provisions of section 21.29 of the Federal Aviation Regulations (14 CFR 21.29) and the applicable bilateral airworthiness agreement. Pursuant to this bilateral airworthiness agreement, TCCA has kept the FAA informed of the situation described above. We have examined TCCA's findings, evaluated all pertinent information, and determined that AD action is necessary for airplanes of this type design that are certificated for operation in the United States.

Therefore, we are issuing this AD to supersede AD 2006–22–06 and AD 98–13–24 and to continue to require the actions specified in those ADs. This AD also requires doing the terminating action (installation of a new HSTCU), and revising the Emergency and Abnormal Procedures sections of the AFM, which replace the existing revisions. This AD also requires the removal of certain AFM revisions.

**Change to Supplemental NPRM**

As a result of superseding AD 98–13–24 and adding an action due to the new service information, we have changed certain paragraph identifiers and added others.

**FAA's Determination of the Effective Date**

An unsafe condition exists that requires the immediate adoption of this AD; therefore, providing notice and opportunity for public comment before the AD is issued is impracticable, and good cause exists to make this AD effective in less than 30 days.

**Comments Invited**

This AD is a final rule that involves requirements that affect flight safety and was not preceded by notice and an opportunity for public comment; however, we invite you to submit any relevant written data, views, or arguments regarding this AD. Send your comments to an address listed in the **ADDRESSES** section. Include "Docket No. FAA–2006–26378; Directorate Identifier 2006–NM–230–AD" at the beginning of your comments. We specifically invite comments on the overall regulatory, economic, environmental, and energy aspects of the AD that might suggest a need to modify it.

We will post all comments we receive, without change, to *http://dms.dot.gov*, including any personal information you provide. We will also post a report summarizing each substantive verbal contact with FAA personnel concerning this AD. Using the search function of that Web site, anyone can find and read the comments in any of our dockets, including the name of the individual who sent the comment (or signed the comment on behalf of an association, business, labor union, etc.). You can review the DOT's complete Privacy Act Statement in the **Federal Register** published on April 11, 2000 (65 FR 19477–78), or you can visit *http://dms.dot.gov*.

**Examining the Docket**

You may examine the AD docket on the Internet at *http://dms.dot.gov*, or in person at the Docket Management Facility office between 9 a.m. and 5 p.m., Monday through Friday, except Federal holidays. The Docket Management Facility office (telephone (800) 647–5227) is located on the plaza level of the Nassif Building at the DOT street address stated in the **ADDRESSES** section. Comments will be available in the AD docket shortly after the Docket Management System receives them.

**Authority for This Rulemaking**

Title 49 of the United States Code specifies the FAA's authority to issue rules on aviation safety. Subtitle I, Section 106, describes the authority of the FAA Administrator. Subtitle VII, Aviation Programs, describes in more detail the scope of the Agency's authority.

We are issuing this rulemaking under the authority described in Subtitle VII, Part A, Subpart III, Section 44701, "General requirements." Under that section, Congress charges the FAA with promoting safe flight of civil aircraft in air commerce by prescribing regulations for practices, methods, and procedures the Administrator finds necessary for safety in air commerce. This regulation is within the scope of that authority because it addresses an unsafe condition that is likely to exist or develop on products identified in this rulemaking action.

**Regulatory Findings**

We have determined that this AD will not have federalism implications under Executive Order 13132. This AD will not have a substantial direct effect on the States, on the relationship between the national government and the States, or on the distribution of power and responsibilities among the various levels of government.

For the reasons discussed above, I certify that the regulation:

1. Is not a "significant regulatory action" under Executive Order 12866;

2. Is not a "significant rule" under the DOT Regulatory Policies and Procedures (44 FR 11034, February 26, 1979); and

3. Will not have a significant economic impact, positive or negative, on a substantial number of small entities under the criteria of the Regulatory Flexibility Act.

We prepared a regulatory evaluation of the estimated costs to comply with this AD and placed it in the AD docket. See the **ADDRESSES** section for a location to examine the regulatory evaluation.

**List of Subjects in 14 CFR Part 39**

Air transportation, Aircraft, Aviation safety, Incorporation by reference, Safety.

**Adoption of the Amendment**

■ Accordingly, under the authority delegated to me by the Administrator, the FAA amends part 39 of the Federal Aviation Regulations (14 CFR part 39) as follows:

## PART 39—AIRWORTHINESS DIRECTIVES

■ 1. The authority citation for part 39 continues to read as follows:

**Authority:** 49 U.S.C. 106(g), 40113, 44701.

**§ 39.13 [Amended]**

■ 2. The Federal Aviation Administration (FAA) amends § 39.13 by removing amendment 39–10615 (63 FR 34574, June 25, 1998) and amendment 39–14803 (71 FR 63219, October 30, 2006) and by adding the following new airworthiness directive (AD):

**2007–05–11 Bombardier, Inc. (Formerly Canadair):** Docket No. FAA 2006–26378; Directorate Identifier 2006–NM–230–AD; Amendment 39–14972.

**Effective Date**

(a) This AD becomes effective March 20, 2007.

**Affected ADs**

(b) This AD supersedes AD 98–13–24 and AD 2006–22–06.

**Applicability**

(c) This AD applies to Bombardier Model CL–600–2B16 (CL–604) airplanes, serial numbers 5301 through 5665 inclusive; and Model CL–600–2B19 (Regional Jet Series 100 & 440) airplanes, serial numbers 7003 through 7990 inclusive and 8000 through 8066 inclusive; certificated in any category.

**Note 1:** The Model CL–600–2B19 (Regional Jet Series 100 & 440) airplanes may be referred to by their marketing designations as RJ100, RJ200, RJ440, CRJ100, CRJ200, CRJ440, and CL–65.

**Unsafe Condition**

(d) This AD results from reports of trim problems including uncommanded trim, trim

in the opposite direction to that selected, loss of trim position indication and, in one case, potential loss of trim disconnect capability. We are issuing this AD to prevent these events, which could result in conditions that vary from reduced controllability of the airplane to loss of control of the airplane.

**Compliance**

(e) You are responsible for having the actions required by this AD performed within the compliance times specified, unless the actions have already been done.

**Restatement of Certain Requirements of AD 98–13–24**

*Replacement of Horizontal Stabilizer Trim Control Unit (HSTCU)*

(f) For Model CL–600–2B19 (Regional Jet Series 100) airplanes, serial numbers 7003 through 7112 inclusive: Within 18 months after July 30, 1998 (the effective date of AD 98–13–24), replace the HSTCU with a new HSTCU having part number 601R92301–9, and reactivate the mach trim switch/light (if deactivated), in accordance with Bombardier Service Bulletin S.B. 601R–27–053, Revision B, dated February 21, 1997. Doing paragraph (o) of this AD terminates the requirements of this paragraph.

**Note 2:** Accomplishment of paragraph (f) of this AD, prior to July 30, 1998, in accordance with Bombardier Service Bulletin S.B. 601R–27–053, dated May 27, 1996; or Revision A, dated August 26, 1996; is considered acceptable for compliance with the applicable actions specified in paragraph (f) of this AD.

**Restatement of Certain Requirements of AD 2006–22–06**

*Airplane Flight Manual (AFM) Revisions*

(g) Within 14 days after November 14, 2006 (the effective date of AD 2006–22–06), make the applicable AFM revisions specified in paragraph (g)(1) or (g)(2) of this AD by incorporating the applicable Canadair (Bombardier) temporary revisions (TRs) identified in Table 1 of this AD into the applicable AFM. Doing the revision specified in paragraph (m) of this AD terminates the requirements of this paragraph for those airplanes only.

(1) For Model CL–600–2B16 (CL–604) airplanes: Revise the Emergency and Abnormal Procedures sections of the AFM to advise the flightcrew of additional procedures to follow in the event of stabilizer trim runaway and to advise the flightcrew of revised procedures to follow in the event of MACH TRIM, STAB TRIM, and horizontal stabilizer trim malfunctions.

(2) For Model CL–600–2B19 (Regional Jet Series 100 & 440) airplanes: Revise the Emergency and Abnormal Procedures sections of the AFM to advise the flightcrew of revised procedures to follow in the event of stabilizer trim runaway and in the event of MACH TRIM, STAB TRIM, and horizontal stabilizer trim malfunctions.

TABLE 1—TRS

| For Bombardier Model— | Use— | Dated— | To the— |
|---|---|---|---|
| CL–600–2B16 (CL–604) airplanes | Canadair Challenger TR 604/21–1 | October 3, 2006 | Canadair Challenger CL–604 AFM, PSP 604–1. |
| CL–600–2B19 (Regional Jet Series 100 & 440) airplanes. | Canadair Regional Jet TR RJ/152–5. | October 3, 2006 | Canadair Regional Jet AFM, CSP A–012. |

(h) When the applicable TR specified in paragraph (g) of this AD has been included in the general revisions of the applicable AFM, those general revisions may be inserted into the AFM and the applicable TR may be removed, provided the relevant information in the general revisions is identical to that in the TR.

*Installation of Circuit Breaker Identification Collars*

(i) Within 14 days after November 14, 2006, install circuit breaker identification collars in accordance with Bombardier Modification Summary Package IS601R27410051, Revision C, dated September 29, 2006 (for Model CL–600–2B19 (Regional Jet Series 100 & 440) airplanes); or the Accomplishment Instructions of Bombardier Alert Service Bulletin A604–27–029, dated September 28, 2006 (for Model CL–600–2B16 (CL–604) airplanes); as applicable.

*Additional AFM Revision*

(j) For Model CL–600–2B19 (Regional Jet Series 100 & 440) airplanes: Within 14 days after November 14, 2006, revise the Normal section of the Canadair Regional Jet AFM, CSP A–012, to include the statement specified in Figure 1 of this AD. This may be done by inserting a copy of Figure 1 of this AD into the AFM.

''Prior to the flightcrew's first flight of the day, do the following actions:

1. Review the location of the STAB CH1 HSTCU and STAB CH2 HSTCU circuit breakers.

2. Complete a functional check of the stabilizer trim system as detailed below.

**Control Wheel Stab Trim Disconnect Check**

Control Wheel Stab Trim Disconnect switches . . . . Check

- Make sure STAB TRIM caution message is out.
- Activate the pilot's Control Wheel Stab Trim Disconnect switch and make sure the STAB TRIM caution message comes on.
- Engage the STAB TRIM switches and make sure the STAB TRIM caution message is out.
- Activate the co-pilot's Control Wheel Stab Trim Disconnect switch and make sure the STAB TRIM caution message comes on.
- Engage the STAB TRIM and MACH TRIM switches and make sure the STAB TRIM and MACH TRIM caution messages are out.''

NOTE:

During ground testing only, do not activate the Control Wheel Stab Trim Disconnect switch if the horizontal stabilizer trim is in motion.

**Figure 1**

**Note 3:** When a statement identical to that in paragraph (j) of this AD has been included in the general revisions of the applicable AFM, those general revisions may be inserted into the AFM, and the copy of this AD may be removed from the AFM.

(k) For Model CL–600–2B16 (CL–604) airplanes: Within 14 days after November 14, 2006, revise the Normal section of the Canadair Challenger CL–604 AFM, PSP 604–1, to include the following statement. This may be done by inserting a copy of this AD into the AFM.

''Prior to the flightcrew's first flight of the day, do the following actions:

1. Review the location of the STAB CH1 HSTCU and STAB CH2 HSTCU circuit breakers.

2. Check the stabilizer trim system as detailed in CL–604 AFM 'Normal Procedures' section titled 'Flight Controls Trim Systems, Before Flight—First Flight of the Day.' ''

**Note 4:** When a statement identical to that in paragraph (k) of this AD has been included in the general revisions of the applicable AFM, those general revisions may be inserted into the AFM, and the copy of this AD may be removed from the AFM.

*Previous Actions Accomplished According to Modification Summary Package*

(l) Actions accomplished before November 14, 2006, in accordance with Bombardier Modification Summary Package

IS601R27410051, Revision A, dated September 18, 2006; or Revision B, dated September 27, 2006; are considered acceptable for compliance with the action specified in paragraph (i) of this AD, provided that the circuit breaker collars meet the color requirements of Bombardier Modification Summary Package IS601R27410051, Revision C, dated September 29, 2006.

**New Requirements of This AD**

*New Revised AFM Revisions*

(m) Within 14 days after the effective date of this AD, make the applicable AFM revisions specified in paragraph (m)(1) or (m)(2) of this AD by incorporating the applicable Canadair (Bombardier) TRs identified in Table 2 of this AD into the applicable AFM, and after doing the revision, remove the applicable AFM revision required by paragraph (g) of this AD from the applicable AFM. Doing the applicable revision specified in this paragraph terminates the requirements of paragraph (g) for that airplane.

(1) For Model CL–600–2B16 (CL–604) airplanes: Revise the Emergency and Abnormal Procedures sections of the AFM to advise the flightcrew of procedures to follow in the event of stabilizer trim runaway and in the event of MACH TRIM, STAB TRIM, and horizontal stabilizer trim malfunctions.

(2) For Model CL–600–2B19 (Regional Jet Series 100 & 440) airplanes: Revise the Emergency and Abnormal Procedures sections of the AFM to advise the flightcrew of revised procedures to follow in the event of stabilizer trim runaway and in the event of MACH TRIM, STAB TRIM, and horizontal stabilizer trim malfunctions.

TABLE 2.—REVISED TRS

| For Bombardier Model— | Use— | Dated— | To the— |
|---|---|---|---|
| CL–600–2B16 (CL–604) airplanes | Canadair Challenger TR 604/21–2 | January 30, 2007 | Canadair Challenger CL–604 AFM, PSP 604–1. |
| CL–600–2B19 (Regional Jet Series 100 & 440) airplanes. | Canadair Regional Jet TR RJ/152–6. | January 26, 2007 | Canadair Regional Jet AFM, CSP A–012. |

(n) When the applicable TR specified in paragraph (m) of this AD has been included in the general revisions of the applicable AFM, those general revisions may be inserted into the AFM and the applicable TR may be removed.

*Terminating Action—Installation of New, Improved Part*

(o) Within 9 months after the effective date of this AD, install HSTCU, part number (P/N) 601R92301–15 (vendor P/N 7060–10) or higher dash number, in accordance with the Accomplishment Instructions of Bombardier Alert Service Bulletin A604–27–029, dated September 28, 2006 (for Model CL–600–2B16 (CL–604) airplanes); or Bombardier Service Bulletin 601R–27–147, dated September 28, 2006 (for Model CL–600–2B19 (Regional Jet Series 100 & 440) airplanes); as applicable. Doing this installation terminates the requirements of paragraph (f) of this AD. After doing this installation, the circuit breaker identification collars required by paragraph (i) of this AD may be removed. After doing this installation, the requirements specified in paragraphs (o)(1) and (o)(2) of this AD must be followed.

(1) Within 14 days after doing the installation or within 14 days after the effective date of this AD, whichever occurs later, the AFM revisions required by paragraphs (j) and (k) of this AD must be removed from the AFM.

**Note 5:** It is recommended for Model CL–600–2B16 (CL–604) operators that the functional check of the stabilizer trim system on the aircraft's first flight of the day continue to be performed in accordance with the Normal Procedures Section of the Canadair Challenger CL–604 AFM.

(2) After doing the installation, the AFM revisions required by paragraph (g) of this AD may be removed from the applicable AFM, but only if the removal of the AFM revisions was done before the effective date of this AD.

**Note 6:** Bombardier Service Bulletin 601R–27–147, dated September 28, 2006, refers to Sagem Service Bulletin HSTCU–27–011, dated September 22, 2006, as an additional source of service information for accomplishment of the installation.

**Service Bulletin Exception**

(p) Although Bombardier Alert Service Bulletin A604–27–029, dated September 28, 2006, specifies to return certain parts to the manufacturer, this AD does not include that requirement.

**Alternative Methods of Compliance (AMOCs)**

(q)(1) The Manager, New York Aircraft Certification Office, FAA, has the authority to approve AMOCs for this AD, if requested in accordance with the procedures found in 14 CFR 39.19.

(2) Before using any AMOC approved in accordance with § 39.19 on any airplane to which the AMOC applies, notify the appropriate principal inspector in the FAA Flight Standards Certificate Holding District Office.

**Related Information**

(r) Canadian airworthiness directives CF–2006–20R1, dated October 4, 2006, and CF–2006–21R1, dated October 3, 2006, also address the subject of this AD.

**Material Incorporated by Reference**

(s) You must use Bombardier Modification Summary Package IS601R27410051, Revision C, dated September 29, 2006; the service bulletins listed in Table 3 of this AD; and the temporary revisions listed in Table 4 of this AD; as applicable, to perform the actions that are required by this AD, unless the AD specifies otherwise.

TABLE 3.—SERVICE BULLETINS INCORPORATED BY REFERENCE

| Service bulletin | Revision level | Date |
|---|---|---|
| Bombardier Alert Service Bulletin A604–27–029 | Original | September 28, 2006. |
| Bombardier Service Bulletin S.B. 601R–27–053 | B | February 21, 1997. |
| Bombardier Service Bulletin 601R–27–147 | Original | September 28, 2006. |

TABLE 4.—ALL TEMPORARY REVISIONS INCORPORATED BY REFERENCE

| Temporary revision— | Dated— | To the— |
|---|---|---|
| Canadair Challenger Temporary Revision 604/21–1 | October 3, 2006 | Canadair Challenger CL–604 Airplane Flight Manual, PSP 604–1. |
| Canadair Challenger Temporary Revision 604/21–2 | January 30, 2007 | Canadair Challenger CL–604 Airplane Flight Manual, PSP 604–1. |

TABLE 4.—ALL TEMPORARY REVISIONS INCORPORATED BY REFERENCE—Continued

| Temporary revision— | Dated— | To the— |
|---|---|---|
| Canadair Regional Jet Temporary Revision RJ/152–5 | October 3, 2006 | Canadair Regional Jet Airplane Flight Manual, CSP A–012. |
| Canadair Regional Jet Temporary Revision RJ/152–6 | January 26, 2007 | Canadair Regional Jet Airplane Flight Manual, CSP A–012. |

(1) The Director of the Federal Register approved the incorporation by reference of the temporary revisions listed in Table 5 of this AD in accordance with 5 U.S.C. 552(a) and 1 CFR part 51.

TABLE 5.—NEW TEMPORARY REVISIONS INCORPORATED BY REFERENCE

| Temporary revision— | Dated— | To the— |
|---|---|---|
| Canadair Challenger Temporary Revision 604/21–2 | January 30, 2007 | Canadair Challenger CL–604 Airplane Flight Manual, PSP 604–1. |
| Canadair Regional Jet Temporary Revision RJ/152–6 | January 26, 2007 | Canadair Regional Jet Airplane Flight Manual, CSP A–012. |

(2) On November 14, 2006 (71 FR 63219, October 30, 2006), the Director of the Federal Register approved the incorporation by reference of Bombardier Alert Service Bulletin A604–27–029, dated September 28, 2006; Bombardier Service Bulletin 601R–27–147, dated September 28, 2006; Bombardier Modification Summary Package IS601R27410051, Revision C, dated September 29, 2006; and the temporary revisions listed in Table 6 of this AD in accordance with 5 U.S.C. 552(a) and 1 CFR part 51.

TABLE 6.—PREVIOUS TEMPORARY REVISIONS INCORPORATED BY REFERENCE

| Temporary revision— | Dated— | To the— |
|---|---|---|
| Canadair Challenger Temporary Revision 604/21–1 | October 3, 2006 | Canadair Challenger CL–604 Airplane Flight Manual, PSP 604–1. |
| Canadair Regional Jet Temporary Revision RJ/152–5 | October 3, 2006 | Canadair Regional Jet Airplane Flight Manual, CSP A–012. |

(3) On July 30, 1998 (63 FR 34574, June 25, 1998), the Director of the Federal Register approved the incorporation by reference of Bombardier Service Bulletin S.B. 601R–27–053, Revision B, dated February 21, 1997; in accordance with 5 U.S.C. 552(a) and 1 CFR part 51.

(4) Contact Bombardier, Inc., Canadair, Aerospace Group, P.O. Box 6087, Station Centre-ville, Montreal, Quebec H3C 3G9, Canada, for a copy of this service information. You may review copies at the FAA, Transport Airplane Directorate, 1601 Lind Avenue, SW., Renton, Washington; or at the National Archives and Records Administration (NARA). For information on the availability of this material at NARA, call 202–741–6030, or go to: *http://www.archives.gov/federal-register/cfr/ibr-locations.html.*

Issued in Renton, Washington, on February 21, 2007.

**Ali Bahrami,**

*Manager, Transport Airplane Directorate, Aircraft Certification Service.*

[FR Doc. E7–3661 Filed 3–2–07; 8:45 am]

**BILLING CODE 4910–13–P**

## DEPARTMENT OF HEALTH AND HUMAN SERVICES

## Food and Drug Administration

## 21 CFR Part 14

## Advisory Committee: Change of Name and Function

**AGENCY:** Food and Drug Administration, HHS.

**ACTION:** Final rule.

**SUMMARY:** The Food and Drug Administration (FDA) is amending the standing advisory committees' regulations to change the name and function of the Advisory Committee for Pharmaceutical Science. This action is being taken to reflect changes made to the charter for this advisory committee.

**DATES:** This rule is effective March 5, 2007.

**FOR FURTHER INFORMATION CONTACT:** Theresa Green, Committee Management Officer (HF–4), Food and Drug Administration, 5600 Fishers Lane, Rockville, MD 20857, 301–827–1220.

**SUPPLEMENTARY INFORMATION:** FDA is announcing that the name of the Advisory Committee for Pharmaceutical Science, which was established on January 22, 1990, has been changed. The name Advisory Committee for Pharmaceutical Science and Clinical Pharmacology more accurately describes the subject areas for which the committee is responsible. The committee shall provide advice on scientific, clinical and technical issues related to safety and effectiveness of drug products for use in the treatment of a broad spectrum of human diseases, the quality characteristics which such drugs purport or are represented to have and as required, any other product for which FDA has regulatory responsibility, and make appropriate recommendations to the Commissioner of Food and Drugs. The Committee may also review agency sponsored intramural and extramural biomedical research programs in support of FDA's drug regulatory responsibilities and its critical path initiatives related to improving the efficacy and safety of drugs and improving the efficiency of drug development.

FDA is revising § 14.100(c)(16) (21 CFR 14.100(c)(16)) to reflect these changes. In this document, FDA is hereby formally changing the name and the function of the committee by revising § 14.100(c)(16). Publication of this final rule constitutes a final action on this change under the Administrative Procedure Act. Under 5 U.S.C. 553(b)(B)

and (d) and 21 CFR 10.40(d) and (e), the agency finds good cause to dispense with notice and public procedure and to proceed to an immediately effective regulation. Such notice and procedures are unnecessary and are not in the public interest, because the final rule is merely codifying the new name and expanded function of the advisory committee to reflect the current committee charter.

**List of Subjects in 21 CFR Part 14**

Administrative practice and procedure, Advisory committees, Color additives, Drugs, Radiation protection.

■ Therefore, under the Federal Food, Drug, and Cosmetic Act and under authority delegated to the Commissioner of Food and Drugs, 21 CFR part 14 is amended as follows:

## PART 14—PUBLIC HEARING BEFORE A PUBLIC ADVISORY COMMITTEE

■ 1. The authority citation for 21 CFR part 14 continues to read as follows:

**Authority:** 5 U.S.C. App. 2; 15 U.S.C. 1451–1461, 21 U.S.C. 41–50, 141–149, 321–394, 467f, 679, 821, 1034; 28 U.S.C. 2112; 42 U.S.C. 201, 262, 263b, 264; Pub. L. 107–109; Pub. L. 108–155.

■ 2. Section 14.100 is amended by revising the heading of paragraph (c)(16) and paragraph (c)(16)(ii) to read as follows:

### § 14.100 List of standing advisory committees.

* * * * *

(c) * * *

(16) *Advisory Committee for Pharmaceutical Science and Clinical Pharmacology.*

(i) * * *

(ii) Function: The committee shall provide advice on scientific, clinical and technical issues related to safety and effectiveness of drug products for use in the treatment of a broad spectrum of human diseases, the quality characteristics which such drugs purport or are represented to have and as required, any other product for which the Food and Drug Administration has regulatory responsibility, and make appropriate recommendations to the Commissioner of Food and Drugs. The Committee may also review agency sponsored intramural and extramural biomedical research programs in support of FDA's drug regulatory responsibilities and its critical path initiatives related to improving the efficacy and safety of drugs and improving the efficiency of drug development.

* * * * *

Dated: February 26, 2007.

**Randall W. Lutter,**

*Associate Commissioner for Policy and Planning.*

[FR Doc. E7–3716 Filed 3–2–07; 8:45 am]

BILLING CODE 4160–01–S

---

## DEPARTMENT OF HOMELAND SECURITY

## Federal Emergency Management Agency

## 44 CFR Part 67

**[Docket No. FEMA–B–7456]**

## Withdrawal of Final Flood Elevation Determination for Lexington/Fayette County, Kentucky and Incorporated Areas

**AGENCY:** Federal Emergency Management Agency, DHS.

**ACTION:** Final rule; withdrawal.

**SUMMARY:** The Federal Emergency Management Agency (FEMA) withdraws the final flood elevation determination published in 71 FR 60865, October 17, 2006 for the Lexington/Fayette County, Kentucky and Incorporated Areas, hereafter referred to as ''LFC''. A final flood elevation determination will be made at a later date.

**DATES:** *Effective Date:* This rule is effective March 5, 2007.

**FOR FURTHER INFORMATION CONTACT:** William R. Blanton, Jr., Engineering Management Section, Mitigation Division, Federal Emergency Management Agency, 500 C Street, SW., Washington, DC 20472, (202) 646–3151.

**SUPPLEMENTARY INFORMATION:** On July 17, 2006, FEMA issued a letter to LFC finalizing the flood elevation determinations. In addition, the July 17, 2006 letter established a January 17, 2007 effective date for the Flood Insurance Study (FIS) and Flood Insurance Rate Map (FIRM) for the listed community. The reason for this rescission is to allow FEMA to complete a thorough review and revision of the preliminary maps in light of recent identification of potential errors in the FIRMs. Contradictions have been identified in some areas between the printed maps and the digital data base that supports the maps. There are also questions concerning the locations of stream cross sections on the maps. These discrepancies could lead to incorrect interpretation of the flood risk portrayed in the maps, or even incorrect flood insurance determinations. Due to these issues, it is prudent for FEMA to complete a review and revision of these maps prior to them becoming effective.

Until FEMA completes their review and revision of the aforementioned FIRMs, and digital data base, the final flood elevation published in 71 FR 60865, October 17, 2006 for the listed community is hereby withdrawn in accordance with section 110 of the Flood Disaster Protection Act of 1973, 42 U.S.C. 4104. Until further notice, the release of the FIS and FIRM for the listed communities has been postponed.

**National Environmental Policy Act**

This rule is categorically excluded from the requirements of 44 CFR part 10, Environmental Consideration. No environmental impact assessment has been prepared.

**Regulatory Flexibility Act**

As flood elevation determinations are not within the scope of the Regulatory Flexibility Act, 5 U.S.C. 601–612, a regulatory flexibility analysis is not required.

**Regulatory Classification**

This final rule is not a significant regulatory action under the criteria of section 3(f) of Executive Order 12866 of September 30, 1993, Regulatory Planning and Review, 58 FR 51735.

**Executive Order 13132, Federalism**

This rule involves no policies that have federalism implications under Executive Order 13132.

**Executive Order 12988, Civil Justice Reform**

This rule meets the applicable standards of Executive Order 12988.

**List of Subjects in 44 CFR Part 67**

Administrative practice and procedure, Flood insurance, Reporting and recordkeeping requirements.

■ Accordingly, 44 CFR part 67 is amended as follows:

## PART 67—[AMENDED]

■ 1. The authority citation for part 67 continues to read as follows:

**Authority:** 42 U.S.C. 4001 *et seq.*; Reorganization Plan No. 3 of 1978, 3 CFR, 1978 Comp., p. 329; E.O. 12127, 44 FR 19367, 3 CFR, 1979 Comp., p. 376.

### § 67.11 [Amended]

■ 2. The tables published under the authority of § 67.11 are amended to withdraw the following:

The final flood elevation determination published in 71 FR 60865, October 17, 2006 for the Lexington/Fayette County, Kentucky and Incorporated Areas.

Dated: February 22, 2007.

**David I. Maurstad,**

*Director, Mitigation Division, Federal Emergency Management Agency, Department of Homeland Security.*

[FR Doc. E7–3724 Filed 3–2–07; 8:45 am]

BILLING CODE 9110–12–P

## DEPARTMENT OF COMMERCE

### National Oceanic and Atmospheric Administration

### 50 CFR Part 679

**[Docket No. 070213032–7032–01; I.D. 022807A]**

### Fisheries of the Exclusive Economic Zone Off Alaska; Pollock in Statistical Area 630 of the Gulf of Alaska

**AGENCY:** National Marine Fisheries Service (NMFS), National Oceanic and Atmospheric Administration (NOAA), Commerce.

**ACTION:** Temporary rule; modification of a closure.

**SUMMARY:** NMFS is reopening directed fishing for pollock in Statistical Area 630 of the Gulf of Alaska (GOA) for 24 hours. This action is necessary to fully use the A season allowance of the 2007 total allowable catch (TAC) of pollock specified for Statistical Area 630 of the GOA.

**DATES:** Effective 1200 hrs, Alaska local time (A.l.t.), March 1, 2007, through 1200 hrs, A.l.t., March 2, 2007. Comments must be received at the following address no later than 4:30 p.m., A.l.t., March 15, 2007.

**ADDRESSES:** Send comments to Sue Salveson, Assistant Regional Administrator, Sustainable Fisheries Division, Alaska Region, NMFS, Attn: Ellen Sebastian. Comments may be submitted by:

- Mail to: P.O. Box 21668, Juneau, AK 99802;
- Hand delivery to the Federal Building, 709 West 9th Street, Room 420A, Juneau, Alaska;
- FAX to 907–586–7557;
- E-mail to *630pollock2@noaa.gov* and include in the subject line of the e-mail comment the document identifier: ''g63plkro4'' (E-mail comments, with or without attachments, are limited to 5 megabytes); or
- Webform at the Federal eRulemaking Portal: *http://www.regulations.gov*. Follow the instructions at that site for submitting comments.

**FOR FURTHER INFORMATION CONTACT:** Josh Keaton, 907–586–7228.

**SUPPLEMENTARY INFORMATION:** NMFS manages the groundfish fishery in the GOA exclusive economic zone according to the Fishery Management Plan for Groundfish of the Gulf of Alaska (FMP) prepared by the North Pacific Fishery Management Council under authority of the Magnuson-Stevens Fishery Conservation and Management Act. Regulations governing fishing by U.S. vessels in accordance with the FMP appear at subpart H of 50 CFR part 600 and 50 CFR part 679.

NMFS closed the directed fishery for pollock in Statistical Area 630 of the GOA under § 679.20(d)(1)(iii) on January 22, 2007 (72 FR 2793, January 23, 2007). The fishery was subsequently reopened on February 6, 2007 and closed on February 8, 2007 (72 FR 5346, February 6, 2007), reopened on February 12, 2007 and closed on February 14, 2007 (72 FR 7353, February 15, 2007), and reopened on February 20, 2007 and closed on February 22, 2007 (72 FR 8132, February 23, 2007).

NMFS has determined that approximately 2,850 mt of pollock remain in the directed fishing allowance in Statistical Area 630 of the GOA. Therefore, in accordance with § 679.25(a)(1)(i), (a)(2)(i)(C) and (a)(2)(iii)(D), and to fully utilize the A season allowance of the 2007 TAC of pollock in Statistical Area 630, NMFS is terminating the previous closure and is reopening directed fishing for pollock in Statistical Area 630 of the GOA. In accordance with § 679.20(d)(1)(iii), the Regional Administrator finds that this directed fishing allowance will be reached after 24 hours. Consequently, NMFS is prohibiting directed fishing for pollock in Statistical Area 630 of the GOA after the 24 hours, effective 1200 hrs, A.l.t., March 2, 2007.

#### Classification

This action responds to the best available information recently obtained from the fishery. The Assistant Administrator for Fisheries, NOAA (AA), finds good cause to waive the requirement to provide prior notice and opportunity for public comment pursuant to the authority set forth at 5 U.S.C. 553(b)(B) and 679.25(c)(1)(ii) as such requirement is impracticable and contrary to the public interest. This requirement is impracticable and contrary to the public interest as it would prevent NMFS from responding to the most recent fisheries data in a timely fashion and would delay the opening of pollock in Statistical Area 630 of the GOA. NMFS was unable to publish a notice providing time for public comment because the most recent, relevant data only became available as of February 27, 2007.

The AA also finds good cause to waive the 30–day delay in the effective date of this action under 5 U.S.C. 553(d)(3). This finding is based upon the reasons provided above for waiver of prior notice and opportunity for public comment.

Without this inseason adjustment, NMFS could not allow the fishery for pollock in Statistical Area 630 of the GOA to be harvested in an expedient manner and in accordance with the regulatory schedule. Under § 679.25(c)(2), interested persons are invited to submit written comments on this action to the above address until March 15, 2007.

This action is required by § 679.25 and § 679.20 and is exempt from review under Executive Order 12866.

**Authority:** 16 U.S.C. 1801 *et seq.*

Dated: February 28, 2007.

**James P. Burgess,**

*Acting Director, Office of Sustainable Fisheries, National Marine Fisheries Service.*

[FR Doc. 07–988 Filed 2–28–07; 12:48 pm]

BILLING CODE 3510–22–S

## DEPARTMENT OF COMMERCE

### National Oceanic and Atmospheric Administration

### 50 CFR Part 679

**[Docket No.070213032–7032–01; I.D. 112206B]**

### Fisheries of the Exclusive Economic Zone Off Alaska; Gulf of Alaska; 2007 and 2008 Final Harvest Specifications for Groundfish

**AGENCY:** National Marine Fisheries Service (NMFS), National Oceanic and Atmospheric Administration (NOAA), Commerce.

**ACTION:** Final rule; closures.

**SUMMARY:** NMFS announces 2007 and 2008 final harvest specifications, reserves and apportionments thereof, Pacific halibut prohibited species catch (PSC) limits, and associated management measures for the groundfish fishery of the Gulf of Alaska (GOA). This action is necessary to establish harvest limits and associated management measures for groundfish during the 2007 and 2008 fishing years and to accomplish the goals and objectives of the Fishery Management Plan for Groundfish of the Gulf of Alaska (FMP). The intended effect of this action is to conserve and manage the groundfish resources in the GOA in

accordance with the Magnuson-Stevens Fishery Conservation and Management Act (MSA).

**DATES:** The 2007 and 2008 final harvest specifications and associated management measures are effective at 1200 hrs, Alaska local time (A.l.t.), March 5, 2007, through 2400 hrs, A.l.t., December 31, 2008.

**ADDRESSES:** Copies of the Final Environmental Impact Statement (EIS), Record of Decision (ROD), and Final Regulatory Flexibility Analysis (FRFA) prepared for this action are available from the Alaska Region, NMFS, P.O. Box 21668, Juneau, AK 99802, Attn: Ellen Sebastian, or from the Alaska Region website at *http://www.fakr.noaa.gov*. Copies of the final 2006 Stock Assessment and Fishery Evaluation (SAFE) report for the groundfish resources of the GOA, dated November 2006, are available from the North Pacific Fishery Management Council (Council), West 4th Avenue, Suite 306, Anchorage, AK 99510 2252 (907 271 2809), or from its website at *http://www.fakr.noaa.gov/npfmc*.

**FOR FURTHER INFORMATION CONTACT:** Tom Pearson, Sustainable Fisheries Division, Alaska Region, 907–481–1780, or e-mail at *tom.pearson@noaa.gov*.

**SUPPLEMENTARY INFORMATION:** NMFS manages the groundfish fisheries in the exclusive economic zone of the GOA under the FMP. The Council prepared the FMP under the authority of the MSA, 16 U.S.C. 1801, *et seq*. Regulations governing U.S. fisheries and implementing the FMP appear at 50 CFR parts 600, 679, and 680.

The FMP and its implementing regulations require NMFS, after consultation with the Council, to specify and apportion the total allowable catch (TAC) for each target species and for the ''other species'' category, the sum of which must be within the optimum yield (OY) range of 116,000 to 800,000 metric tons (mt). The final specifications set forth in Tables 1 through 22 of this document satisfy this requirement. For 2007, the sum of the TAC amounts is 269,912 mt. For 2008, the sum of the TAC amounts is 286,173 mt.

Section 679.20(c)(1) further requires NMFS to publish and solicit public comment on proposed annual TACs, halibut PSC amounts, and seasonal allowances of pollock and inshore/offshore Pacific cod. The proposed GOA groundfish specifications and Pacific halibut PSC allowances for 2007 and 2008 were published in the **Federal Register** on December 15, 2006 (71 FR 75437). Comments were invited and accepted through January 16, 2007. NMFS received 2 letters of comment on the proposed specifications. These letters of comment are summarized in the Response to Comments section of this action. In December 2006, NMFS consulted with the Council regarding the 2007 and 2008 harvest specifications. After considering public comments received, as well as biological and economic data that were available at the Council's December 2006 meeting, NMFS is implementing the 2007 and 2008 final harvest specifications, as recommended by the Council.

## Acceptable Biological Catch (ABC) and TAC Specifications

In December 2006, the Council, its Advisory Panel (AP), and its Scientific and Statistical Committee (SSC), reviewed current biological and harvest information about the condition of groundfish stocks in the GOA. This information was compiled by the Council's GOA Plan Team and was presented in the final 2006 SAFE report for the GOA groundfish fisheries, dated November 2006 (see **ADDRESSES**). The SAFE report contains a review of the latest scientific analyses and estimates of each species= biomass and other biological parameters, as well as summaries of the available information on the GOA ecosystem and the economic condition of the groundfish fisheries off Alaska. From these data and analyses, the Plan Team estimates an ABC for each species or species category.

The final ABC levels are based on the best available biological and socioeconomic information, including projected biomass trends, information on assumed distribution of stock biomass, and revised methods used to calculate stock biomass. The FMP specifies the formulas, or tiers, to be used to compute ABCs and overfishing levels (OFLs). The formulas applicable to a particular stock or stock complex are determined by the level of reliable information available to fisheries scientists. This information is categorized into a successive series of six tiers with tier one representing the highest level of information and tier six the lowest level of information.

The final TAC recommendations were based on the ABCs as adjusted for other biological and socioeconomic considerations, including maintaining the total TAC within the required OY range of 116,000 to 800,000 mt. The Council adopted the AP's TAC recommendations. The Council recommended TACs for 2007 and 2008 equal to ABCs for pollock, deep-water flatfish, rex sole, sablefish, Pacific ocean perch, shortraker rockfish, rougheye rockfish, northern rockfish, pelagic shelf rockfish, thornyhead rockfish, demersal shelf rockfish, big skate, longnose skate, and other skates. The Council recommended TACs less than the ABCs for Pacific cod, flathead sole, shallow-water flatfish, arrowtooth flounder, other rockfish, and Atka mackerel. None of the Council's recommended TACs for 2007 and 2008 exceeds the final ABC for any species or species category. The 2007 and 2008 harvest specifications approved by the Secretary of Commerce (Secretary) are unchanged from those recommended by the Council and are consistent with the preferred harvest strategy alternative in the EIS. The 2007 and 2008 TACs are less than the maximum permissible ABCs recommended by the Council's plan teams and SSC NMFS finds that the recommended ABCs and TACs are consistent with the biological condition of the groundfish stocks as described in the 2006 SAFE report and approved by the Council. The apportionment of TAC amounts among gear types, processing sectors, and seasons is discussed below.

NMFS finds that the Council's recommendations for OFL, ABC, and TAC amounts are consistent with the biological condition of groundfish stocks as adjusted for other biological and socioeconomic considerations, including maintaining the total TAC within the OY range. NMFS reviewed the Council's recommended TAC specifications and apportionments and approves these specifications under § 679.20(c)(3)(ii).

Tables 1 and 2 list the final 2007 and 2008 OFLs, ABCs, TACs, and area apportionments of groundfish in the GOA. The sum of 2007 ABCs is 490,327 mt, which is lower than the 2006 ABC total of 500,625 mt (71 FR 10870, March 3, 2006), while the sum of 2008 ABCs of 511,838 mt is higher than the 2006 total.

## Specification and Apportionment of TAC Amounts

As in 2006, the SSC and Council recommended the method of apportioning the sablefish ABC among management areas in 2007 and 2008 include commercial fishery and survey data. NMFS stock assessment scientists believe the use of unbiased commercial fishery data reflecting catch-per-unit effort provides a desirable input for stock distribution assessments. The use of commercial fishery data is evaluated annually to ensure unbiased information is included in stock distribution models. The Council's recommendation for sablefish area apportionments also takes into account

the prohibition on the use of trawl gear in the Southeast Outside (SEO) District of the Eastern Regulatory Area and makes available 5 percent of the combined Eastern Regulatory Area ABCs to trawl gear for use as incidental catch in other directed groundfish fisheries in the West Yakutat (WYK) District (§ 679.20(a)(4)(i)).

Since the inception of a State of Alaska (State) managed pollock fishery in Prince William Sound (PWS), the GOA Plan Team has recommended the guideline harvest level (GHL) for the pollock fishery in PWS be deducted from the ABC for the western stock of pollock in the GOA in the Western/Central/West Yakutat (W/C/WYK) Area. For the 2007 and 2008 pollock fisheries in PWS the State's GHL is 1,650 mt.

The apportionment of annual pollock TAC among the Western and Central Regulatory Areas of the GOA reflects the seasonal biomass distribution and is discussed in greater detail below. The annual pollock TAC in the Western and Central Regulatory Areas of the GOA is apportioned among Statistical Areas 610, 620, and 630, as well as equally among each of the following four seasons: the A season (January 20 through March 10), the B season (March 10 through May 31), the C season (August 25 through October 1), and the D season (October 1 through November 1) (§§ 693.23(d)(2)(i) through (iv) and 679.20(a)(5)(iii)(B)).

The SSC, AP, and Council adopted the Plan Team's OFL and ABC recommendations for all groundfish species categories.

The SSC, AP, and Council recommended apportionment of the ABC for Pacific cod in the GOA among regulatory areas based on the three most recent NMFS summer trawl surveys.

The 2007 and 2008 Pacific cod TACs are affected by the State's fishery for Pacific cod in State waters in the Central and Western Regulatory Areas, as well as in PWS. The SSC, AP, and Council recommended that the sum of all State and Federal water Pacific cod removals not exceed the ABC. Accordingly, the Council recommended reduction of the 2007 and 2008 Pacific cod TACs from the ABCs in the Central and Western Regulatory Areas to account for State GHLs. Therefore, the 2007 Pacific cod TACs are less than the ABCs by the following amounts: (1) Eastern GOA, 413 mt; (2) Central GOA, 9,468 mt; and (3) Western GOA, 6,714 mt. Similarly, the 2008 Pacific cod TACs are less than the ABCs as follows: (1) Eastern GOA, 428 mt; (2) Central GOA, 9,817 mt; and (3) Western GOA, 6,961 mt. These amounts reflect the sum of the State's 2007 and 2008 GHLs in these areas, which are 10 percent, 25 percent, and 25 percent of the Eastern, Central, and Western GOA ABCs, respectively. The percentages of ABC used to calculate the GHLs for the State managed Pacific cod fisheries are unchanged from 2006.

NMFS also is establishing seasonal apportionments of the annual Pacific cod TAC in the Western and Central Regulatory Areas. Sixty percent of the annual TAC is apportioned to the A season for hook-and-line, pot, and jig gear from January 1 through June 10, and for trawl gear from January 20 through June 10. Forty percent of the annual TAC is apportioned to the B season for hook-and-line, pot, and jig gear from September 1 through December 31, and for trawl gear from September 1 through November 1 (§§ 679.23(d)(3) and 679.20(a)(11)).

As in 2006, NMFS establishes for 2007 and 2008 an A season directed fishing allowance (DFA) for the Pacific cod fisheries in the GOA based on the management area TACs minus the recent average A season incidental catch of Pacific cod in each management area before June 10 (§ 679.20(d)(1)). The DFA and incidental catch before June 10 will be managed such that total harvest in the A season will be no more than 60 percent of the annual TAC. Incidental catch taken after June 10 will continue to accrue against the B season TAC. This action meets the intent of the Steller Sea Lion Protection Measures by achieving temporal dispersion of the Pacific cod removals and by reducing the likelihood of harvest exceeding 60 percent of the annual TAC in the A season (January 1 through June 10). The seasonal apportionments of the annual Pacific cod TAC are discussed in greater detail below.

The FMP specifies that the amount for the ''other species'' category be set at an amount less than or equal to 5 percent of the combined TAC amounts for target species. The final 2007 and 2008 annual GOA-wide TACs of 4,500 mt are less than 5 percent of the combined TAC amounts for target species. The sums of the TACs for all GOA groundfish is 269,912 mt for 2007 and 286,173 mt for 2008, which are within the OY range specified by the FMP. The sums of the 2007 and 2008 TACs are lower than the 2006 TAC sum of 291,950 mt.

**Central Gulf of Alaska Rockfish Pilot Program**

Congress granted NMFS specific statutory authority to manage Central GOA rockfish fisheries in Section 802 of the Consolidated Appropriations Act of 2004 (Public Law 108–199). The Council adopted a proposed Central Gulf of Alaska Rockfish Pilot Program (Rockfish Program) to meet the requirements of Section 802 on June 6, 2005. The elements of the Rockfish Program are discussed in detail in the proposed rule to Amendment 68 to the FMP (71 FR 33040, June 7, 2006) and in the final rule to implement the Rockfish Program (71 FR 67210, November 20, 2006). The final rule became effective December 20, 2006. The Rockfish Program is authorized for five years, from January 1, 2007, until December 31, 2011. A brief overview of major provisions of the Rockfish Program which have implications for the 2007 and 2008 harvest specifications follows.

The Rockfish Program allocates exclusive harvesting and processing privileges for primary rockfish species and for associated species harvested incidentally to those rockfish in the Central GOA, an area from 147° W. longitude to 159° W. longitude. The primary rockfish species are northern rockfish, Pacific ocean perch, and pelagic shelf rockfish. Secondary species are those species incidentally harvested during the harvest of the primary rockfish species fisheries and include Pacific cod, rougheye rockfish, shortraker rockfish, sablefish, and thornyhead rockfish. The Rockfish Program also allocates a portion of the total GOA halibut mortality limit annually specified under § 679.21 to participants based on historic halibut mortality rates in the primary rockfish species fisheries. The amounts of primary rockfish species, secondary species, and halibut mortality to be allocated to the Rockfish Program will not be known until eligible participants apply for participation in the Program. These amounts will be posted on the Alaska Region website at *http://www.fakr.noaa.gov* when they become available early in 2007.

The Rockfish Program also establishes catch limits, commonly called ''sideboards,'' to limit the ability of participants eligible for the Rockfish Program to harvest fish in fisheries other than the Central GOA rockfish fisheries. Sideboards limit the total amount of catch in other groundfish fisheries that can be taken by eligible harvesters to historic levels, including harvests made in the State's parallel groundfish fisheries. Parallel fisheries are authorized by the State in its waters concurrent with the Federal fishery. Parallel fisheries catch is deducted from the Federal TACs. Sideboards limit catch in specific rockfish fisheries and the amount of halibut bycatch that can be used in certain flatfish fisheries. Tables 18 and 19 list the 2007 and 2008 final groundfish sideboard limitations.

Table 20 lists the 2007 and 2008 final halibut mortality limitations.

**Changes From the Proposed 2007 and 2008 Harvest Specifications in the GOA**

In October 2006, the Council's recommendations for the proposed 2007 and 2008 harvest specifications (71 FR 75437, December 15, 2006) were based largely upon information contained in the final 2005 SAFE report for the GOA groundfish fisheries, dated November 2005. The Council recommended that OFLs and ABCs for stocks in tiers 1 through 3 be based on biomass projections as set forth in the 2005 SAFE report and estimates of groundfish harvests through the 2006 and 2007 fishing years. For stocks in tiers 4 through 6, for which biomass projections could not be made, the Council recommended the same OFL and ABC levels for 2006 until the final 2006 SAFE report could be completed.

The 2006 SAFE report, dated November 2006, which was not available when the Council made its recommendations in October 2006, contains the best and most recent scientific information on the condition of the groundfish stocks. This report was considered in December 2006 by the Council when it made recommendations for the final 2007 and 2008 harvest specifications. Based on the final 2006 SAFE report, the sum of the 2007 final TACs for the GOA (269,912 mt) is 5,544 mt greater than the sum of the proposed TACs (264,367 mt). The largest 2007 increases occurred for Pacific cod, from 44,705 mt to 52,264 mt (17 percent increase); rex sole, from 8,700 mt to 9,100 mt (5 percent increase); sablefish, from 13,700 mt to 14,310 mt (4 percent increase); and for pelagic shelf rockfish, from 5,461 mt to 5,542 mt (1 percent increase). The largest decreases occurred for pollock, from 70,507 mt to 68,307 mt (3 percent decrease); and for northern rockfish, from 5,900 mt to 4,938 mt (16 percent decrease). Other increases or decreases in 2007 and 2008 are within these ranges.

Compared to the proposed 2007 and 2008 harvest specifications, the Council's final 2007 and 2008 TAC recommendations increase fishing opportunities for species for which the Council had sufficient information to raise TAC levels. These include, Pacific cod, rex sole, sablefish, and pelagic shelf rockfish. Conversely, the Council reduced TAC levels to provide greater protection for several species including pollock, deep water flatfish, Pacific ocean perch, and northern rockfish. The changes recommended by the Council for the 2007 and 2008 fishing years were based on the best scientific information available, consistent with National Standard 2 of the MSA, and within a reasonable range of variation from the proposed TAC recommendations so that the affected public was fairly apprized and could have made meaningful comments based on the proposed specifications. Tables 1 and 2 list the 2007 and 2008 final OFL, ABC, and TAC amounts of the GOA groundfish.

TABLE 1 - FINAL 2007 ABCS, TACS, AND OFLS OF GROUNDFISH FOR THE WESTERN/CENTRAL/WEST YAKUTAT (W/C/WYK), WESTERN (W), CENTRAL (C), EASTERN (E) REGULATORY AREAS, AND IN THE WEST YAKUTAT (WYK), SOUTHEAST OUTSIDE (SEO), AND GULFWIDE (GW) DISTRICTS OF THE GULF OF ALASKA

(values are rounded to the nearest metric ton)

| Species | Area[1] | ABC | TAC | OFL |
|---|---|---|---|---|
| Pollock[2] | | | | |
| | Shumagin (610) | 25,012 | 25,012 | n/a |
| | Chirikof (620) | 20,890 | 20,980 | n/a |
| | Kodiak (630) | 14,850 | 14,850 | n/a |
| | WYK (640) | 1,398 | 1,398 | n/a |
| Subtotal | W/C/WYK | 62,150 | 62,150 | 87,220 |
| | SEO (650) | 6,157 | 6,157 | 8,209 |
| Total | | 68,307 | 68,307 | 95,429 |
| Pacific cod[3] | W | 26,855 | 20,141 | n/a |
| | C | 37,873 | 28,405 | n/a |
| | E | 4,131 | 3,718 | n/a |
| Total | | 68,859 | 52,264 | 97,600 |
| Flatfish[4] (deep-water) | W | 420 | 420 | n/a |
| | C | 4,163 | 4,163 | n/a |
| | WYK | 2,677 | 2,677 | n/a |
| | SEO | 1,447 | 1,447 | n/a |
| Total | | 8,707 | 8,707 | 10,431 |
| Rex sole | W | 1,147 | 1,147 | n/a |
| | C | 5,446 | 5,446 | n/a |

TABLE 1 - FINAL 2007 ABCS, TACS, AND OFLS OF GROUNDFISH FOR THE WESTERN/CENTRAL/WEST YAKUTAT (W/C/WYK), WESTERN (W), CENTRAL (C), EASTERN (E) REGULATORY AREAS, AND IN THE WEST YAKUTAT (WYK), SOUTHEAST OUTSIDE (SEO), AND GULFWIDE (GW) DISTRICTS OF THE GULF OF ALASKA—Continued

(values are rounded to the nearest metric ton)

| Species | Area[1] | ABC | TAC | OFL |
|---|---|---|---|---|
| | WYK | 1,037 | 1,037 | n/a |
| | SEO | 1,470 | 1,470 | n/a |
| Total | | 9,100 | 9,100 | 11,900 |
| Flathead sole | W | 10,908 | 2,000 | n/a |
| | C | 26,054 | 5,000 | n/a |
| | WYK | 2,091 | 2,091 | n/a |
| | SEO | 57 | 57 | n/a |
| Total | | 39,110 | 9,148 | 48,658 |
| Flatfish[5](shallow-water) | W | 24,720 | 4,500 | n/a |
| | C | 24,258 | 13,000 | n/a |
| | WYK | 628 | 628 | n/a |
| | SEO | 1,844 | 1,844 | n/a |
| Total | | 51,450 | 19,972 | 62,418 |
| Arrowtooth flounder | W | 20,852 | 8,000 | n/a |
| | C | 139,582 | 30,000 | n/a |
| | WYK | 16,507 | 2,500 | n/a |
| | SEO | 7,067 | 2,500 | n/a |
| Total | | 184,008 | 43,000 | 214,828 |
| Sablefish[6] | W | 2,470 | 2,470 | n/a |
| | C | 6,190 | 6,190 | n/a |
| | WYK | 2,280 | 2,280 | n/a |
| | SEO | 3,370 | 3,370 | n/a |
| Subtotal | E(WYK and SEO) | 5,650 | 5,650 | n/a |
| Total | | 14,310 | 14,310 | 16,906 |
| Pacific ocean perch[7] | W | 4,244 | 4,244 | 4,976 |
| | C | 7,612 | 7,612 | 8,922 |
| | WYK | 1,140 | 1,140 | n/a |
| | SEO | 1,640 | 1,640 | n/a |
| Subtotal | E(WYK and SEO) | 2,780 | 2,780 | 3,260 |
| Total | | 14,636 | 14,635 | 17,158 |
| Shortraker rockfish[8] | W | 153 | 153 | n/a |
| | C | 353 | 353 | n/a |
| | E | 337 | 337 | n/a |
| Total | | 843 | 843 | 1,124 |

TABLE 1 - FINAL 2007 ABCS, TACS, AND OFLS OF GROUNDFISH FOR THE WESTERN/CENTRAL/WEST YAKUTAT (W/C/WYK), WESTERN (W), CENTRAL (C), EASTERN (E) REGULATORY AREAS, AND IN THE WEST YAKUTAT (WYK), SOUTHEAST OUTSIDE (SEO), AND GULFWIDE (GW) DISTRICTS OF THE GULF OF ALASKA—Continued

(values are rounded to the nearest metric ton)

| Species | Area[1] | ABC | TAC | OFL |
|---|---|---|---|---|
| Rougheye rockfish[9] | W | 136 | 136 | n/a |
| | C | 611 | 611 | n/a |
| | E | 241 | 241 | n/a |
| Total | | 988 | 988 | 1,148 |
| Other rockfish[10,11] | W | 577 | 577 | n/a |
| | C | 386 | 386 | n/a |
| | WYK | 319 | 319 | n/a |
| | SEO | 2,872 | 200 | n/a |
| Total | | 4,154 | 1,482 | 5,394 |
| Northern rockfish[11,12] | W | 1,439 | 1,439 | n/a |
| | C | 3,499 | 3,499 | n/a |
| | E | 0 | 0 | n/a |
| Total | | 4,938 | 4,938 | 5,890 |
| Pelagic shelf rockfish[13] | W | 1,466 | 1,466 | n/a |
| | C | 3,325 | 3,325 | n/a |
| | WYK | 307 | 307 | n/a |
| | SEO | 444 | 444 | n/a |
| Total | | 5,542 | 5,542 | 6,458 |
| Thornyhead rockfish | W | 513 | 513 | n/a |
| | C | 989 | 989 | n/a |
| | E | 707 | 707 | n/a |
| Total | | 2,209 | 2,209 | 2,945 |
| Big skates[14] | W | 695 | 695 | n/a |
| | C | 2,250 | 2,250 | n/a |
| | E | 599 | 599 | n/a |
| | | 3,544 | 3,544 | 4,726 |
| Longnose skates[15] | W | 65 | 65 | n/a |
| | C | 1,969 | 1,969 | n/a |
| | E | 861 | 861 | n/a |
| | | 2,895 | 2,895 | 3,860 |
| Other skates[16] | GW | 1,617 | 1,617 | 2,156 |
| Demersal shelf rockfish[17] | SEO | 410 | 410 | 650 |
| Atka mackerel | GW | 4,700 | 1,500 | 6,200 |
| Other species[18] | GW | n/a | 4,500 | n/a |

TABLE 1 - FINAL 2007 ABCS, TACS, AND OFLS OF GROUNDFISH FOR THE WESTERN/CENTRAL/WEST YAKUTAT (W/C/WYK), WESTERN (W), CENTRAL (C), EASTERN (E) REGULATORY AREAS, AND IN THE WEST YAKUTAT (WYK), SOUTHEAST OUTSIDE (SEO), AND GULFWIDE (GW) DISTRICTS OF THE GULF OF ALASKA—Continued

(values are rounded to the nearest metric ton)

| Species | Area[1] | ABC | TAC | OFL |
|---|---|---|---|---|
| TOTAL[19] | | 490,327 | 269,912 | 615,879 |

[1]. Regulatory areas and districts are defined at § 679.2.
[2]. Pollock is apportioned in the Western/Central Regulatory Areas among three statistical areas. During the A season, the apportionment is based on an adjusted estimate of the relative distribution of pollock biomass of approximately 30 percent, 48 percent, and 22 percent in Statistical Areas 610, 620, and 630, respectively. During the B season, the apportionment is based on the relative distribution of pollock biomass at 30 percent, 59 percent, and 11 percent in Statistical Areas 610, 620, and 630, respectively. During the C and D seasons, the apportionment is based on the relative distribution of pollock biomass at 53 percent, 15 percent, and 32 percent in Statistical Areas 610, 620, and 630, respectively. Tables 5 and 6 list the seasonal apportionments. In the West Yakutat and Southeast Outside Districts of the Eastern Regulatory Area, pollock is not divided into seasonal allowances.
[3]. The annual Pacific cod TAC is apportioned 60% to an A season and 40% to a B season in the Western and Central Regulatory Areas of the GOA. Pacific cod is allocated 90% for processing by the inshore component and 10% for processing by the offshore component. Tables 7 and 8 list the 2007 and 2008 proposed seasonal apportionments and component allocations of TAC.
[4]. ″Deep-water flatfish″ means Dover sole, Greenland turbot, and deepsea sole.
[5]. ″Shallow-water flatfish″ means flatfish not including ″deep-water flatfish,″ flatheador arrowtooth flounder.
[6]. Sablefish is allocated to trawl and hook-and-line gears for 2007 and to trawl gear in 2008. Tables 3 and 4 list these amounts.
[7]. ″Pacific ocean perch″ means Sebastes alutus.
[8]. ″Shortraker rockfish″ means Sebastes borealis.
[9]. ″Rougheye rockfish″ means Sebastes aleutianus.
[10]. ″Other rockfish″ in the Western and Central Regulatory Areas and in the West Yakutat District means slope rockfish and demersal shelf rockfish. The category ″other rockfish″ in the SEO District means slope rockfish.
[11]. ″Slope rockfish″ means Sebastes aurora (aurora), S. melanostomus (blackgill), S. paucispinis (bocaccio), S. goodei (chilipepper), S. crameri (darkblotch), S. elongatus (greenstriped), S. variegatus (harlequin), S. wilsoni (pygmy), S. babcocki (redbanded), S. proriger (redstripe), S. zacentrus (sharpchin), S. jordani (shortbelly), S. brevispinis (silvergrey), S. diploproa (splitnose), S. saxicola (stripetail), S. miniatus (vermilion), and S. reedi (yellowmouth). In the Eastern GOA only, slope rockfish also includes northern rockfish, S. polyspinous.
[12]. ″Northern rockfish″ means Sebastes polyspinis.
[13]. ″Pelagic shelf rockfish″ means Sebastes ciliatus (dark), S. variabilis (dusky), S. entomelas (widow), and S. flavidus (yellowtail).
[14]. Big skate means Raja binoculata.
[15]. Longnose skate means Raja rhina.
[16]. Other skates means Bathyraja spp.
[17]. ″Demersal shelf rockfish″ means Sebastes pinniger (canary), S. nebulosus (china), S. caurinus (copper), S. maliger (quillback), S. helvomaculatus (rosethorn), S. nigrocinctus (tiger), and S. ruberrimus (yelloweye).
[18]. ″Other species″ means sculpins, sharks, squid, and octopus. There is no OFL or ABC for ″other species.″ The FMP specifies that the amount for the ″other species″ category be set at an amount less than or equal to 5% of the combined TAC amounts for target species.
[19]. The total ABC and OFL is the sum of the ABCs and OFLs for assessed target species.

TABLE 2 - FINAL 2008 ABCS, TACS, AND OFLS OF GROUNDFISH FOR THE WESTERN/CENTRAL/WEST YAKUTAT (W/C/WYK), WESTERN (W), CENTRAL (C), EASTERN (E) REGULATORY AREAS, AND IN THE WEST YAKUTAT (WYK), SOUTHEAST OUTSIDE (SEO), AND GULFWIDE (GW) DISTRICTS OF THE GULF OF ALASKA (VALUES ARE ROUNDED TO THE NEAREST METRIC TON)

(values are rounded to the nearest metric ton)

| Species | Area[1] | ABC | TAC | OFL |
|---|---|---|---|---|
| Pollock[2] | | | | |
| | Shumagin (610) | 30,308 | 30,308 | n/a |
| | Chirikof (620) | 25,313 | 25,313 | n/a |
| | Kodiak (630) | 17,995 | 17,995 | n/a |
| | WYK (640) | 1,694 | 1,694 | n/a |
| Subtotal | W/C/WYK | 75,310 | 75,310 | 105,490 |
| | SEO (650) | 6,157 | 6,157 | 8,209 |
| Total | | 81,467 | 81,467 | 113,699 |
| Pacific cod[3] | W | 27,846 | 20,885 | n/a |
| | C | 39,270 | 29,453 | n/a |
| | E | 4,284 | 3,856 | n/a |
| Total | | 71,400 | 54,194 | 86,000 |
| Flatfish[4] (deep-water) | W | 430 | 430 | n/a |
| | C | 4,296 | 4,296 | n/a |

TABLE 2 - FINAL 2008 ABCS, TACS, AND OFLS OF GROUNDFISH FOR THE WESTERN/CENTRAL/WEST YAKUTAT (W/C/WYK), WESTERN (W), CENTRAL (C), EASTERN (E) REGULATORY AREAS, AND IN THE WEST YAKUTAT (WYK), SOUTHEAST OUTSIDE (SEO), AND GULFWIDE (GW) DISTRICTS OF THE GULF OF ALASKA (VALUES ARE ROUNDED TO THE NEAREST METRIC TON)—Continued

(values are rounded to the nearest metric ton)

| Species | Area[1] | ABC | TAC | OFL |
|---|---|---|---|---|
| | WYK | 2,763 | 2,763 | n/a |
| | SEO | 1,494 | 1,494 | n/a |
| Total | | 8,983 | 8,983 | 11,412 |
| Rex sole | W | 1,122 | 1,122 | n/a |
| | C | 5,327 | 5,327 | n/a |
| | WYK | 1,014 | 1,014 | n/a |
| | SEO | 1,437 | 1,437 | n/a |
| Total | | 8,900 | 8,900 | 11,600 |
| Flathead sole | W | 11,464 | 2,000 | n/a |
| | C | 27,382 | 5,000 | n/a |
| | WYK | 2,198 | 2,198 | n/a |
| | SEO | 60 | 60 | n/a |
| Total | | 41,104 | 9,258 | 51,146 |
| Flatfish[5](shallow-water) | W | 24,720 | 4,500 | n/a |
| | C | 24,258 | 13,000 | n/a |
| | WYK | 628 | 628 | n/a |
| | SEO | 1,844 | 1,844 | n/a |
| Total | | 51,450 | 19,972 | 62,418 |
| Arrowtooth flounder | W | 21,164 | 8,000 | n/a |
| | C | 141,673 | 30,000 | n/a |
| | WYK | 16,754 | 2,500 | n/a |
| | SEO | 7,172 | 2,500 | n/a |
| Total | | 186,763 | 43,000 | 218,020 |
| Sablefish[6] | W | 2,458 | 2,458 | n/a |
| | C | 6,159 | 6,159 | n/a |
| | WYK | 2,269 | 2,269 | n/a |
| | SEO | 3,353 | 3,353 | n/a |
| Subtotal | E(WYK and SEO) | 5,622 | 5,622 | n/a |
| Total | | 14,239 | 14,239 | 15,803 |
| Pacific ocean perch[7] | W | 4,291 | 4,291 | 5,030 |
| | C | 7,694 | 7,694 | 9,019 |
| | WYK | 1,153 | 1,153 | n/a |
| | SEO | 1,659 | 1,659 | n/a |
| Subtotal | E(WYK and SEO) | 2,812 | 2,812 | 3,296 |

TABLE 2 - FINAL 2008 ABCS, TACS, AND OFLS OF GROUNDFISH FOR THE WESTERN/CENTRAL/WEST YAKUTAT (W/C/WYK), WESTERN (W), CENTRAL (C), EASTERN (E) REGULATORY AREAS, AND IN THE WEST YAKUTAT (WYK), SOUTHEAST OUTSIDE (SEO), AND GULFWIDE (GW) DISTRICTS OF THE GULF OF ALASKA (VALUES ARE ROUNDED TO THE NEAREST METRIC TON)—Continued

(values are rounded to the nearest metric ton)

| Species | Area[1] | ABC | TAC | OFL |
|---|---|---|---|---|
| Total | | 14,797 | 14,797 | 17,345 |
| Shortraker rockfish[8] | W | 153 | 153 | n/a |
| | C | 353 | 353 | n/a |
| | E | 337 | 337 | n/a |
| Total | | 843 | 843 | 1,124 |
| Rougheye rockfish[9] | W | 137 | 137 | n/a |
| | C | 614 | 614 | n/a |
| | E | 242 | 242 | n/a |
| Total | | 993 | 993 | 1,197 |
| Other rockfish[10,11] | W | 577 | 577 | n/a |
| | C | 386 | 386 | n/a |
| | WYK | 319 | 319 | n/a |
| | SEO | 2,872 | 200 | n/a |
| Total | | 4,154 | 1,482 | 5,394 |
| Northern rockfish[11,12] | W | 1,383 | 1,383 | n/a |
| | C | 3,365 | 3,365 | n/a |
| | E | 0 | 0 | n/a |
| Total | | 4,748 | 4,748 | 5,660 |
| Pelagic shelf rockfish[13] | W | 1,752 | 1,752 | n/a |
| | C | 3,973 | 3,973 | n/a |
| | WYK | 366 | 366 | n/a |
| | SEO | 531 | 531 | n/a |
| Total | | 6,622 | 6,622 | 8,186 |
| Thornyhead rockfish | W | 513 | 513 | n/a |
| | C | 989 | 989 | n/a |
| | E | 707 | 707 | n/a |
| Total | | 2,209 | 2,209 | 2,945 |
| Big skates[14] | W | 695 | 695 | n/a |
| | C | 2,250 | 2,250 | n/a |
| | E | 599 | 599 | n/a |
| Total | | 3,544 | 3,544 | 4,726 |
| Longnose skates[15] | W | 65 | 65 | n/a |
| | C | 1,969 | 1,969 | n/a |
| | E | 861 | 861 | n/a |

TABLE 2 - FINAL 2008 ABCS, TACS, AND OFLS OF GROUNDFISH FOR THE WESTERN/CENTRAL/WEST YAKUTAT (W/C/WYK), WESTERN (W), CENTRAL (C), EASTERN (E) REGULATORY AREAS, AND IN THE WEST YAKUTAT (WYK), SOUTHEAST OUTSIDE (SEO), AND GULFWIDE (GW) DISTRICTS OF THE GULF OF ALASKA (VALUES ARE ROUNDED TO THE NEAREST METRIC TON)—Continued

(values are rounded to the nearest metric ton)

| Species | Area[1] | ABC | TAC | OFL |
|---|---|---|---|---|
| Total | | 2,895 | 2,895 | 3,860 |
| Other skates[16] | GW | 1,617 | 1,617 | 2,156 |
| Demersal shelf rockfish[17] | SEO | 410 | 410 | 650 |
| Atka mackerel | GW | 4,700 | 1,500 | 6,200 |
| Other species[18] | GW | n/a | 4,500 | n/a |
| TOTAL[19] | | 511,838 | 286,173 | 629,541 |

[1]. Regulatory areas and districts are defined at § 679.2.
[2]. Pollock is apportioned in the Western/Central Regulatory Areas among three statistical areas. During the A season, the apportionment is based on an adjusted estimate of the relative distribution of pollock biomass of approximately 30 percent, 48 percent, and 22 percent in Statistical Areas 610, 620, and 630, respectively. During the B season, the apportionment is based on the relative distribution of pollock biomass at 30 percent, 59 percent, and 11 percent in Statistical Areas 610, 620, and 630, respectively. During the C and D seasons, the apportionment is based on the relative distribution of pollock biomass at 53 percent, 15 percent, and 32 percent in Statistical Areas 610, 620, and 630, respectively. Tables 5 and 6 list the seasonal apportionments. In the West Yakutat and Southeast Outside Districts of the Eastern Regulatory Area, pollock is not divided into seasonal allowances.
[3]. The annual Pacific cod TAC is apportioned 60% to an A season and 40% to a B season in the Western and Central Regulatory Areas of the GOA. Pacific cod is allocated 90% for processing by the inshore component and 10% for processing by the offshore component. Tables 7 and 8 list the 2007 and 2008 proposed seasonal apportionments and component allocations of TAC.
[4]. ″Deep-water flatfish″ means Dover sole, Greenland turbot, and deepsea sole.
[5]. ″Shallow-water flatfish″ means flatfish not including ″deep-water flatfish,″ flatheador arrowtooth flounder.
[6]. Sablefish is allocated to trawl and hook-and-line gears for 2007 and to trawl gear in 2008. Tables 3 and 4 list these amounts.
[7]. ″Pacific ocean perch″ means Sebastes alutus.
[8]. ″Shortraker rockfish″ means Sebastes borealis.
[9]. ″Rougheye rockfish″ means Sebastes aleutianus.
[10]. ″Other rockfish″ in the Western and Central Regulatory Areas and in the West Yakutat District means slope rockfish and demersal shelf rockfish. The category ″other rockfish″ in the SEO District means slope rockfish.
[11]. ″Slope rockfish″ means Sebastes aurora (aurora), S. melanostomus (blackgill), S. paucispinis (bocaccio), S. goodei (chilipepper), S. crameri (darkblotch), S. elongatus (greenstriped), S. variegatus (harlequin), S. wilsoni (pygmy), S. babcocki (redbanded), S. proriger (redstripe), S. zacentrus (sharpchin), S. jordani (shortbelly), S. brevispinis (silvergrey), S. diploproa (splitnose), S. saxicola (stripetail), S. miniatus (vermilion), and S. reedi (yellowmouth). In the Eastern GOA only, slope rockfish also includes northern rockfish, S. polyspinous.
[12]. ″Northern rockfish″ means Sebastes polyspinis.
[13]. ″Pelagic shelf rockfish″ means Sebastes ciliatus (dark), S. variabilis (dusky), S. entomelas (widow), and S. flavidus (yellowtail).
[14]. Big skate means Raja binoculata.
[15]. Longnose skate means Raja rhina.
[16]. Other skates means Bathyraja spp.
[17]. ″Demersal shelf rockfish″ means Sebastes pinniger (canary), S. nebulosus (china), S. caurinus (copper), S. maliger (quillback), S. helvomaculatus (rosethorn), S. nigrocinctus (tiger), and S. ruberrimus (yelloweye).
[18]. ″Other species″ means sculpins, sharks, squid, and octopus. There is no OFL or ABC for ″other species.″ The FMP specifies that the amount for the ″other species″ category be set at an amount less than or equal to 5% of the combined TAC amounts for target species.
[19]. The total ABC and OFL is the sum of the ABCs and OFLs for assessed target species.

**Apportionment of Reserves**

Section 679.20(b)(2) requires 20 percent of each TAC for pollock, Pacific cod, flatfish, and the ''other species'' category be set aside in reserves for possible apportionment at a later date. In 2006, NMFS reapportioned all of the reserves in the final harvest specifications. For 2007 and 2008, NMFS proposed reapportionment of all the reserves in the proposed 2007 and 2008 harvest specifications published in the **Federal Register** on December 15, 2006 (71 FR 75437). NMFS received no public comments on the proposed reapportionments. For the final 2007 and 2008 harvest specifications, NMFS apportioned as proposed all of the reserves for pollock, Pacific cod, flatfish, and ''other species.'' Specifications of TAC shown in Tables 1 and 2 reflect apportionment of reserve amounts for these species and species groups.

**Allocations of the Sablefish TAC Amounts to Vessels Using Hook-and-Line and Trawl Gear**

Sections 679.20(a)(4)(i) and (ii) require allocations of sablefish TACs for each of the regulatory areas and districts to hook-and-line and trawl gear. In the Western and Central Regulatory Areas, 80 percent of each TAC is allocated to hook-and-line gear, and 20 percent of each TAC is allocated to trawl gear. In the Eastern Regulatory Area, 95 percent of the TAC is allocated to hook-and-line gear, and 5 percent is allocated to trawl gear. The trawl gear allocation in the Eastern Regulatory Area may only be used to support incidental catch of sablefish in directed fisheries for other target species (§ 679.20(a)(1)). In recognition of the trawl ban in the SEO District of the Eastern Regulatory Area, the Council recommended and NMFS concurs with the allocation of 5 percent of the combined Eastern Regulatory Area sablefish TAC to trawl gear in the WYK District and the remainder to vessels using hook-and-line gear. As a result, NMFS allocates 100 percent of the sablefish TAC in the SEO District to vessels using hook-and-line gear. The Council recommended that hook-and-line sablefish TAC be established annually to ensure that the Individual Fishery Quota (IFQ) fishery is conducted concurrent with the halibut IFQ fishery and is based on the most

recent survey information. This recommendation results in an allocation of 283 mt to trawl gear and 1,997 mt to hook-and-line gear in the WYK District and 3,370 mt to hook-and-line gear in the SEO District in 2007, and 281 mt to trawl gear in the WYK District in 2008. Table 3 lists the allocations of the 2007 sablefish TACs between hook-and-line and trawl gear. Table 4 lists the allocations of the 2008 sablefish TACs to trawl gear.

TABLE 3 - FINAL 2007 SABLEFISH TAC SPECIFICATIONS IN THE GULF OF ALASKA AND ALLOCATIONS TO HOOK-AND-LINE AND TRAWL GEAR

(values are rounded to the nearest metric ton)

| Area/district | TAC | Hook-and-line allocation | Trawl allocation |
|---|---|---|---|
| Western | 2,470 | 1,976 | 494 |
| Central | 6,190 | 4,952 | 1,238 |
| West Yakutat | 2,280 | 1,997 | 283 |
| Southeast Outside | 3,370 | 3,370 | 0 |
| Total | 14,310 | 12,295 | 2,015 |

TABLE 4 - FINAL 2008 SABLEFISH TAC SPECIFICATIONS IN THE GULF OF ALASKA AND ALLOCATION TO TRAWL GEAR

(values are rounded to the nearest metric ton)

| Area/district | TAC | Hook-and-line allocation | Trawl allocation |
|---|---|---|---|
| Western | 2,458 | n/a | 492 |
| Central | 6,159 | n/a | 1,232 |
| West Yakutat | 2,269 | n/a | 281 |
| Southeast Outside | 3,353 | n/a | 0 |
| Total | 14,239 | n/a | 2,005 |

[1] The Council recommended that specifications for the hook-and-line gear sablefish IFQ fisheries be limited to 1 year.

**Apportionments of Pollock TAC Among Seasons and Regulatory Areas, and Allocations for Processing by Inshore and Offshore Components**

In the GOA, pollock is apportioned by season and area, and is further allocated for processing by inshore and offshore components. Pursuant to § 679.20(a)(5)(iv)(B), the annual pollock TAC specified for the Western and Central Regulatory Areas of the GOA is apportioned into four equal seasonal allowances of 25 percent. As established by § 679.23(d)(2)(i) through (iv), the A, B, C, and D season allowances are available from January 20 to March 10, March 10 to May 31, August 25 to October 1, and October 1 to November 1, respectively.

Pollock TACs in the Western and Central Regulatory Areas of the GOA are apportioned among Statistical Areas 610, 620, and 630. In the A and B seasons, the apportionments are in proportion to the distribution of pollock biomass based on the four most recent NMFS winter surveys. In the C and D seasons, the apportionments are in proportion to the distribution of pollock biomass based on the four most recent NMFS summer surveys. For 2007 and 2008, the Council recommends averaging the winter and summer distribution of pollock in the Central Regulatory Area for the A season. The average is intended to reflect the distribution of pollock and the performance of the fishery in the area during the A season for the 2007 and 2008 fishing years. Within any fishing year, the underage or overage of a seasonal allowance may be added to, or subtracted from, subsequent seasonal allowances in a manner to be determined by the Regional Administrator. The rollover amount of unharvested pollock is limited to 20 percent of the seasonal apportionment for the statistical area. Any unharvested pollock above the 20 percent limit could be further distributed to the other statistical areas, in proportion to the estimated biomass in the subsequent season in those statistical areas (§ 679.20(a)(5)(iv)(B)). The WYK and SEO District pollock TACs of 1,398 mt and 6,157 mt in 2007 and 1,694 mt and 6,157 mt in 2008, respectively, are not allocated by season.

Section 679.20(a)(6)(i) requires the allocation of 100 percent of the pollock TAC in all regulatory areas and all seasonal allowances to vessels catching pollock for processing by the inshore component after subtracting amounts projected by the Regional Administrator to be caught by, or delivered to, the offshore component incidental to directed fishing for other groundfish species. The amount of pollock available for harvest by vessels harvesting pollock for processing by the offshore component is that amount actually taken as incidental catch during directed fishing for groundfish species other than pollock, up to the maximum retainable amounts allowed by § 679.20(e) and (f). At this time, these incidental catch amounts are unknown and will be determined during the fishing year.

The 2007 and 2008 seasonal biomass distribution of pollock in the Western and Central Regulatory Areas, area apportionments, and seasonal apportionments for the A, B, C, and D seasons are summarized in Tables 5 and 6, except that amounts of pollock for processing by the inshore and offshore components are not shown.

TABLE 5 - FINAL 2007 DISTRIBUTION OF POLLOCK IN THE CENTRAL AND WESTERN REGULATORY AREAS OF THE GULF OF ALASKA; SEASONAL BIOMASS DISTRIBUTION, AREA APPORTIONMENTS; AND SEASONAL ALLOWANCES OF ANNUAL TAC

(values are rounded to the nearest metric ton)

| Area Apportionments Resulting From Seasonal Distribution of Biomass | | | | |
|---|---|---|---|---|
| Season | Shumagin (Area 610) | Chirikof (Area 620) | Kodiak (Area 630) | Total |
| A | 4,511 (29.70%) | 7,357 (48.44%) | 3,320 (21.86%) | 15,188 (100%) |
| B | 4,511 (29.70%) | 8,924 (58.76%) | 1,753 (11.54%) | 15,188 (100%) |
| C | 7,995 (52.64%) | 2,304 (15.17%) | 4,889 (32.19%) | 15,188 (100%) |
| D | 7,995 (52.64%) | 2,304 (15.17%) | 4,889 (32.19%) | 15,188 (100%) |
| Annual Total | 25,012 | 20,890 | 14,850 | 60,752 |

TABLE 6 - FINAL 2008 DISTRIBUTION OF POLLOCK IN THE CENTRAL AND WESTERN REGULATORY AREAS OF THE GULF OF ALASKA; SEASONAL BIOMASS DISTRIBUTION, AREA APPORTIONMENTS; AND SEASONAL ALLOWANCES OF ANNUAL TAC

(values are rounded to the nearest metric ton)

| Area Apportionments Resulting From Seasonal Distribution of Biomass | | | | |
|---|---|---|---|---|
| Season | Shumagin (Area 610) | Chirikof (Area 620) | Kodiak (Area 630) | Total |
| A | 5,466 (29.70%) | 8,915 (48.44%) | 4,023 (21.86%) | 18,404 (100%) |
| B | 5,466 (29.70%) | 10,814 (58.76%) | 2,124 (11.54%) | 18,404 (100%) |
| C | 9,688 (52.64%) | 2,792 (15.17%) | 5,924 (32.19%) | 18,404 (100%) |
| D | 9,688 (52.64%) | 2,792 (15.17%) | 5,924 (32.19%) | 18,404 (100%) |
| Annual Total | 30,308 | 25,313 | 17,995 | 73,616 |

**Seasonal Apportionments of Pacific Cod TAC and Allocations for Processing of Pacific Cod TAC Between Inshore and Offshore Components**

Pacific cod fishing is divided into two seasons in the Western and Central Regulatory Areas of the GOA. For hook-and-line, pot, and jig gear, the A season is January 1 through June 10, and the B season is September 1 through December 31. For trawl gear, the A season is January 20 through June 10, and the B season is September 1 through November 1 (§ 679.23(d)(3)). After subtracting incidental catch from the A season, 60 percent of the annual TAC will be available as a DFA during the A season for the inshore and offshore components. The remaining 40 percent of the annual TAC will be available for harvest during the B season. The seasonal allocations will be apportioned between the inshore and offshore components, as provided in § 679.20(a)(6)(ii). Under § 679.20(a)(11)(ii), any overage or underage of the Pacific cod allowance from the A season may be subtracted from or added to the subsequent B season allowance.

Section 679.20(a)(6)(ii) requires allocation of the TAC apportionments of Pacific cod in all regulatory areas to vessels catching Pacific cod for processing by the inshore and offshore components. Ninety percent of the Pacific cod TAC in each regulatory area is allocated to vessels catching Pacific cod for processing by the inshore component. The remaining 10 percent of the TAC is allocated to vessels catching Pacific cod for processing by the offshore component. Tables 7 and 8 list the seasonal apportionments and allocations of the 2007 and 2008 Pacific cod TACs.

TABLE 7 - FINAL 2007 SEASONAL APPORTIONMENTS AND ALLOCATION OF PACIFIC COD TAC AMOUNTS IN THE GULF OF ALASKA; ALLOCATIONS FOR PROCESSING BY THE INSHORE AND OFFSHORE COMPONENTS

(values are rounded to the nearest metric ton)

| Season | Regulatory area | TAC | Component allocation | |
|---|---|---|---|---|
| | | | Inshore (90%) | Offshore (10%) |
| | Western | 20,141 | 18,127 | 2,014 |
| A season (60%) | | 12,085 | 10,876 | 1,208 |
| B season (40%) | | 8,056 | 7,251 | 806 |
| | Central | 28,405 | 25,565 | 2,840 |
| A season (60%) | | 17,043 | 15,339 | 1,704 |
| B season (40%) | | 11,362 | 10,226 | 1,136 |
| | Eastern | 3,718 | 3,346 | 372 |
| Total | | 52,264 | 47,038 | 5,226 |

TABLE 8 - FINAL 2008 SEASONAL APPORTIONMENTS AND ALLOCATION OF PACIFIC COD TAC AMOUNTS IN THE GULF OF ALASKA; ALLOCATIONS FOR PROCESSING BY THE INSHORE AND OFFSHORE COMPONENTS

(values are rounded to the nearest metric ton)

| Season | Regulatory area | TAC | Component allocation | |
|---|---|---|---|---|
| | | | Inshore (90%) | Offshore (10%) |
| | Western | 20,885 | 18,796 | 2,089 |
| A season (60%) | | 12,531 | 11,278 | 1,253 |
| B season (40%) | | 8,354 | 7,519 | 835 |
| | Central | 29,453 | 26,508 | 2,945 |
| A season (60%) | | 17,672 | 15,905 | 1,767 |
| B season (40%) | | 11,781 | 10,603 | 1,178 |
| | Eastern | 3,856 | 3,470 | 386 |
| Total | | 54,194 | 48,775 | 5,419 |

**Demersal Shelf Rockfish (DSR)**

In a commercial fisheries news release dated December 18, 2006, the Alaska Department of Fish and Game (ADF&G) announced the closure of directed fishing for DSR in the SEO District in 2007. The ADF&G estimates that the incidental catch mortality in the commercial halibut fishery will require the entire commercial TAC; therefore, a directed fishery in the SEO District cannot be prosecuted (5 AAC 28.160). NMFS reminds all fishermen that full retention of all DSR by federally permitted catcher vessels using hook-and-line or jig gear fishing for groundfish and Pacific halibut in the SEO District of the GOA is required (§ 679.20(j)).

**Apportionments to the Central GOA Rockfish Pilot Program**

Section 679.81(a)(2) requires the allocation of the primary rockfish species after deducting incidental catch needs in other directed groundfish fisheries in the Central Regulatory Area. Five percent (2.5 percent to trawl gear and 2.5 percent to fixed gear) of the final TACs for Pacific ocean perch, northern rockfish, and pelagic shelf rockfish in the Central Regulatory Area are allocated to the entry level rockfish fishery and the remaining 95 percent to those vessels eligible to participate in the Rockfish Program as described in the proposed and final rules for the Rockfish Program (71 FR 33040, June 7, 2006, and 71 FR 67210, November 20, 2006, respectively). NMFS is setting aside in 2007 and 2008 incidental catch amounts of 330 mt of Pacific ocean perch, 120 mt of northern rockfish, and 100 mt of pelagic shelf rockfish for other directed fisheries in the Central Regulatory Area. These amounts are based on the 2003 through 2006 average incidental catch in the Central Regulatory Area by these other groundfish fisheries.

**Halibut PSC Limits**

Section 679.21(d) establishes the annual halibut PSC limit apportionments to trawl, hook-and-line and pot gear. In December 2006, the Council recommended that NMFS maintain the 2006 halibut PSC limits of 2,000 mt for the trawl fisheries and 300 mt for the hook-and-line fisheries. Ten mt of the hook-and-line limit is further allocated to the DSR fishery in the SEO District. The DSR fishery is defined at § 679.21(d)(4)(iii)(A). This fishery has been apportioned 10 mt in recognition of its small scale harvests. Most vessels in the DSR fishery are less than 60 ft (18.3 m) length overall (LOA) and are exempt from observer coverage. Therefore, observer data are not available to verify actual bycatch amounts. NMFS assumes the halibut bycatch in the DSR fishery is low because of the short soak times for the gear and duration of the DSR fishery. Also, the DSR fishery occurs in the winter when less overlap occurs in the distribution of DSR and halibut.

Section 679.21(d)(4)(i) authorizes the exemption of specified non-trawl fisheries from the halibut PSC limit. NMFS, after consultation with the Council, exempts pot gear, jig gear, and the sablefish IFQ hook-and-line gear fishery from the non-trawl halibut limit for 2007 and 2008. The Council recommended these exemptions because (1) the pot gear fisheries have low annual halibut bycatch mortality (averaging 18 mt annually from 2001 through 2006 and 21 mt in 2006 alone); (2) the halibut and sablefish IFQ fisheries have low halibut bycatch mortality because the IFQ program requires retention of legal-sized halibut by vessels using hook-and-line gear if a halibut IFQ permit holder is aboard and is holding unused halibut IFQ; and (3) halibut mortality for the jig gear fisheries is assumed to be negligible. Halibut mortality is assumed to be negligible in the jig gear fisheries given the small amount of groundfish harvested by jig gear (averaging 323 mt annually from 2001 through 2006 and 128 mt in 2006 alone), the selective nature of jig gear, and the likelihood that halibut caught with jig gear have high survival rates when released.

Section 679.21(d)(5) provides NMFS authority to seasonally apportion the halibut PSC limits after consultation with the Council. The FMP and regulations require the Council and NMFS consider the following information in seasonally apportioning halibut PSC limits: (1) seasonal distribution of halibut, (2) seasonal distribution of target groundfish species relative to halibut distribution, (3) expected halibut bycatch needs on a seasonal basis relative to changes in halibut biomass and expected catch of target groundfish species, (4) expected bycatch rates on a seasonal basis, (5) expected changes in directed groundfish fishing seasons, (6) expected actual start of fishing effort, and (7) economic effects of establishing seasonal halibut allocations on segments of the target groundfish industry.

The final 2006 and 2007 groundfish harvest specifications (71 FR 10870, March 3, 2006) summarized the Council and NMFS' findings with respect to each of these FMP considerations. The Council and NMFS' findings for 2007 and 2008 are unchanged from 2006. The opening dates and halibut PSC limitations for vessels using trawl gear participating in the Rockfish Program in the Central Regulatory Area are described in the final rule to implement the Rockfish Program (71 FR 67210, November 20, 2006).

NMFS concurs with the Council's recommendations described here and listed in Table 9. Section 679.21, paragraphs (d)(5)(iii) and (iv) specify that any underages or overages in a seasonal apportionment of a PSC limit will be deducted from or added to the next respective seasonal apportionment within the 2007 and 2008 fishing years. The information to establish the halibut PSC limits was obtained from the 2006 SAFE report, NMFS, ADF&G, the International Pacific Halibut Commission (IPHC), and public testimony.

TABLE 9 - FINAL 2007 AND 2008 PACIFIC HALIBUT PSC LIMITS, ALLOWANCES, AND APPORTIONMENTS

(values are in metric tons)

| Trawl gear | | Hook-and-line gear[1] | | | |
|---|---|---|---|---|---|
| | | Other than DSR | | DSR | |
| Dates | Amount | Dates | Amount | Dates | Amount |
| January 20–April 1 | 550 (27.5%) | January 1–June 10 | 250 (86%) | January 1–December 31 | 10 (100%) |
| April 1–July 1 | 400 (20%) | June 10–September 1 | 5 (2%) | | |
| July 1–September 1 | 600 (30%) | September 1–December 31 | 35 (12%) | | |
| September 1–October 1 | 150 (7.5%) | n/a | n/a | | |
| October 1–December 31 | 300 (15%) | n/a | n/a | | |
| Total | 2,000 (100%) | n/a | 290 (100%) | | 10 (100%) |

[1] The Pacific halibut PSC limit for hook-and-line gear is allocated to the demersal shelf rockfish (DSR) fishery andfisheries other than DSR. The hook-and-line sablefish fishery is exempt from halibut PSC limits.

Section 679.21(d)(3)(ii) authorizes further apportionment of the trawl halibut PSC limit to trawl fishery categories. The annual apportionments are based on each category's proportional share of the anticipated halibut bycatch mortality during the fishing year and optimization of the total amount of groundfish harvest under the halibut PSC limit. The fishery categories for the trawl halibut PSC limits are (1) a deep-water species complex, comprised of sablefish, rockfish, deep-water flatfish, rex sole and arrowtooth flounder; and (2) a shallow-water species complex, comprised of pollock, Pacific cod, shallow-water flatfish, flathead sole, Atka mackerel, skates, and ''other species'' (§ 679.21(d)(3)(iii)). Table 10 lists the final 2006 and 2007 apportionments for these two fishery complexes.

TABLE 10 - FINAL 2006 AND 2007 APPORTIONMENT OF PACIFIC HALIBUT PSC TRAWL LIMITS BETWEEN THE TRAWL GEAR DEEP-WATER SPECIES COMPLEX AND THE SHALLOW-WATER SPECIES COMPLEX

(values are in metric tons)

| Season | Shallow-water | Deep-water | Total |
|---|---|---|---|
| January 20–April 1 | 450 | 100 | 550 |
| April 1–July1 | 100 | 300 | 400 |
| July 1–September1 | 200 | 400 | 600 |
| September 1–October1 | 150 | Any remainder | 150 |
| Subtotal January 20–October1 | 900 | 800 | 1,700 |
| October 1–December 31[1] | n/a | n/a | 300 |
| Total | n/a | n/a | 2,000 |

[1] No apportionment between shallow-water and deep-water trawl fishery categories during the fifth season (October 1 through December 31).

**Estimated Halibut Bycatch in Prior Years**

The best available information on estimated halibut bycatch is data collected by observers during 2006. The calculated halibut bycatch mortality by trawl, hook and line, and pot gear through December 31, 2006, is 2,002 mt, 290 mt, and 21 mt, respectively, for a total halibut mortality of 2,313 mt.

Halibut bycatch restrictions seasonally constrained trawl gear fisheries during the 2006 fishing year. Trawling during the second season closed for the deep-water species category April 27 (71 FR 25781, May 2, 2006) and during the fourth season September 5 (71 FR 52754, September 7, 2006). Trawling during the first season closed for the shallow-water species category from February 23 to February 27 (71 FR 9977, February 28, 2006, and 71 FR 10625, March 2, 2006) and during the second season on June 10 (71 FR 34021, June 13, 2006). To prevent exceeding the fourth season halibut PSC limit for the shallow-water species category, directed fishing using trawl gear was limited to four 12-hour open periods on September 1 (71 FR 51784,

August 31, 2006), September 6 (71 FR 53339, September 11, 2006), September 20 (71 FR 55134, September 21, 2006), and September 25 (71 FR 56898, September 28, 2006). Trawling for all groundfish targets (with the exception of pollock by vessels using pelagic trawl gear) was closed for the fifth season on October 8 (71 FR 60078, October 12, 2006). Fishing for groundfish using hook-and-line gear remained open in 2006 as the halibut PSC limit was not reached. The amount of groundfish that trawl gear might have harvested if halibut PSC limits had not restricted the 2006 season is unknown.

**Expected Changes in Groundfish Stocks and Catch**

The final 2007 and 2008 ABCs for Pacific cod, deep-water flatfish, flathead sole, arrowtooth flounder, Pacific ocean perch, and pelagic shelf rockfish are higher than those established for 2006. However, the final 2007 and 2008 ABCs for pollock, sablefish, rex sole, and northern rockfish are lower than those established for 2006. For the remaining target species, the Council recommended that ABC levels remain unchanged from 2006. More information on these changes is included in the final SAFE report (November 2006) and in the Council, SSC, and AP minutes from the December 2006 meeting available from the Council (see **ADDRESSES**).

In the GOA, the total final TAC amounts are 269,912 mt for 2007, and 286,173 mt for 2008, a decrease of about 8 percent in 2007 and 2 percent in 2008 from the 2006 TAC total of 291,950 mt. Table 11 compares the final TACs for 2006 to the final TACs for 2007 and 2008.

TABLE 11 - COMPARISON OF FINAL 2006 AND FINAL 2007 AND 2008 TOTAL ALLOWABLE CATCH IN THE GULF OF ALASKA

(values are rounded to the nearest metric ton)

| Species | 2006 | 2007 | 2008 |
|---|---|---|---|
| Pollock | 86,807 | 68,307 | 81,467 |
| Pacific cod | 52,264 | 52,264 | 54,194 |
| Sablefish | 14,840 | 14,310 | 14,239 |
| Rex sole | 9,200 | 9,100 | 8,900 |
| ''Other species'' | 13,856 | 4,500 | 4,500 |
| Deep-water flatfish | 8,665 | 8,707 | 8,983 |
| Flathead sole | 9,077 | 9,148 | 9,258 |
| Arrowtooth flounder | 38,000 | 43,000 | 43,000 |
| Pacific ocean perch | 14,261 | 14,636 | 14,797 |
| Northern rockfish | 5,091 | 4,938 | 4,748 |
| Pelagic shelf rockfish | 5,436 | 5,542 | 6,622 |

**Current Estimates of Halibut Biomass and Stock Condition**

The most recent halibut stock assessment was conducted by the IPHC in December 2006 for the 2007 commercial fishery. The 2006 assessment contains substantial changes from the previous year. Information accruing from ongoing passive integrated transponder (PIT) tag recoveries, as well as inconsistencies in the traditional closed-area stock assessments for some areas has prompted the IPHC to examine stock assessment frameworks. It had been assumed that once the halibut reached legal commercial size there was little movement between regulatory areas. PIT tag recoveries indicate greater movement between regulatory areas than previously thought. The IPHC then developed a coast wide assessment based on a single stock. The assessment adopted a coast wide harvest rate of 20 percent of the exploitable biomass overall but higher for some areas with net immigration. The IPHC staff have recommended a harvest rate of 25 percent in Area 2C, 20 percent in Areas 3A, 3B, and 4A, and 15 percent in Areas 4 B, C, D, and E. The current exploitable halibut biomass in Alaska for 2007 was estimated to be 169,000 mt, down from 189,543 mt in 2006. The female spawning biomass remains far above the minimum which occurred in the 1970s.

The exploitable biomass of the Pacific halibut stock peaked at 326,520 mt in 1988. According to the IPHC, the long-term average reproductive biomass for the Pacific halibut resource was estimated at 118,000 mt. Long-term average yield was estimated at 26,980 mt, round weight. The species is fully utilized. Recent average catches (1994–2004) in the commercial halibut fisheries in Alaska have averaged 34,241 mt, round weight. Catch in waters off Alaska is 27 percent higher than long-term potential yield for the entire halibut stock, reflecting the good condition of the Pacific halibut resource. In December 2006, the IPHC recommended Alaska commercial catch limits totaling 33,560 mt, round weight, in 2007, a slight increase from 33,421 mt in 2006. Through December 31, 2006, commercial hook-and-line harvests of halibut off Alaska totaled 31,581 mt, round weight.

Additional information on the Pacific halibut stock assessment may be found in the IPHC's 2006 Pacific halibut stock assessment (December 2006), available on the IPHC website at *http://www.iphc.washington.edu*. The IPHC will consider the 2006 Pacific halibut assessment for 2007 at its January 2007 annual meeting when it sets the 2007 commercial halibut fishery quotas.

**Other Factors**

The proposed 2006 and 2007 harvest specifications (71 FR 75437, December 15, 2006) discuss potential impacts of expected fishing for groundfish on halibut stocks, as well as methods available for, and costs of, reducing halibut bycatch in the groundfish fisheries.

**Halibut Discard Mortality Rates**

The Council recommends and NMFS concurs that the halibut discard mortality rates (DMRs) recommended by the staff of the IPHC for the 2007 and 2008 GOA groundfish fisheries be used to monitor the 2007 and 2008 GOA halibut bycatch mortality limits. The IPHC recommended use of long-term average DMRs for the 2007 and 2008 groundfish fisheries. The IPHC will analyze observer data annually and recommend changes to the DMRs where a DMR shows large variation from the mean. Most of the IPHC's assumed DMRs were based on an average of mortality rates determined from NMFS observer data collected between 1996 and 2005. Long-term average DMRs were not available for some fisheries, so rates from the most recent years were used. For the ''other species'' and skate fisheries, where insufficient mortality data are available, the mortality rate of halibut caught in the Pacific cod fishery for that gear type was recommended as a default rate. The GOA DMRs for 2007 and 2008 are revised from those used in 2006. The DMRs for hook-and-line targeted fisheries range from 10 to 14 percent. The DMRs for trawl target fisheries range from 53 to 76 percent. The DMRs for pot target fisheries are 16 percent. The final DMRs for 2007 and 2008 are listed in Table 12. A copy of the document justifying these DMRs is available from the Council (see **ADDRESSES**) and is discussed in Appendix A of the final 2006 SAFE report, dated November 2006.

TABLE 12 - FINAL 2007 AND 2008 HALIBUT DISCARD MORTALITY RATES FOR VESSELS FISHING IN THE GULF OF ALASKA

(values are percent of halibut bycatch assumed to be dead)

| Gear | Target | Mortality Rate (%) |
|---|---|---|
| Hook-and-line | Other species | 14 |
| | Skates | 14 |
| | Pacific cod | 14 |
| | Rockfish | 10 |
| Trawl | Arrowtooth flounder | 69 |
| | Atka mackerel | 60 |
| | Deep-water flat-fish | 53 |
| | Flathead sole | 61 |
| | Non-pelagic pollock | 59 |
| | Other species | 63 |
| | Skates | 63 |
| | Pacific cod | 63 |
| | Pelagic pollock | 76 |
| | Rex sole | 63 |
| | Rockfish | 67 |
| | Sablefish | 65 |
| | Shallow-water flatfish | 71 |
| Pot | Other species | 16 |
| | Skates | 16 |
| | Pacific cod | 16 |

**Non-exempt American Fisheries Act (AFA) Catcher Vessel Groundfish Harvest and PSC Sideboard Limitations**

Section 679.64 established groundfish harvesting and processing sideboard limitations on AFA catcher/processors and catcher vessels in the GOA. These sideboard limits are necessary to protect the interests of fishermen and processors who have not directly benefitted from the AFA from fishermen and processors who have received exclusive harvesting and processing privileges under the AFA. Listed AFA catcher/processors are prohibited from harvesting any species of fish in the GOA (§ 679.7(k)(1)(ii)). The listed AFA catcher/processors are also prohibited from processing any pollock in the GOA and any groundfish harvested in Statistical Area 630 of the GOA (§ 679.7(k)(1)(iv)). AFA catcher vessels less than 125 ft (38.1 m) LOA whose annual Bering Sea and Aleutian Islands pollock landings totaled less than 5,100 mt and that made 40 or more GOA groundfish landings from 1995 through 1997 are exempt from sideboard limits (§ 679.64(b)(2)(ii)).

Sideboard limits for non-exempt AFA catcher vessels in the GOA are based on their traditional harvest levels of TAC in groundfish fisheries covered by the GOA FMP. Section 679.64(b)(3)(iii) establishes the groundfish sideboard limitations in the GOA based on the retained catch of non-exempt AFA catcher vessels of each sideboard species from 1995 through 1997 divided by the TAC for that species over the same period. These amounts are listed in Table 13 for 2007 and in Table 14 for 2008. All catch of sideboard species made by non-exempt AFA catcher vessels, whether as targeted catch or incidental catch, will be deducted from the sideboard limits in Tables 13 and 14.

TABLE 13 - FINAL 2007 GOA NON-EXEMPT AMERICAN FISHERIES ACT CATCHER VESSEL (CV) GROUNDFISH HARVEST SIDEBOARD LIMITATIONS

(values are in metric tons)

| Species | Apportionments and allocations by area/season/processor/gear | Ratio of 1995-1997 non-exempt AFA CV catch to 1995-1997 TAC | 2007 TAC | 2007 non-exempt AFA catcher vessel sideboard |
|---|---|---|---|---|
| Pollock | A Season (W/C areas only) January 20 - February 25 | | | |
| | Shumagin (610) | 0.6112 | 4,511 | 2,757 |
| | Chirikof (620) | 0.1427 | 7,357 | 1,050 |
| | Kodiak (630) | 0.2438 | 3,320 | 809 |
| | B Season (W/C areas only) March 10 - May 31 | | | |
| | Shumagin (610) | 0.6112 | 4,511 | 2,757 |
| | Chirikof (620) | 0.1427 | 8,924 | 1,273 |
| | Kodiak (630) | 0.2438 | 1,753 | 427 |
| | C Season (W/C areas only) | | | |

TABLE 13 - FINAL 2007 GOA NON-EXEMPT AMERICAN FISHERIES ACT CATCHER VESSEL (CV) GROUNDFISH HARVEST SIDEBOARD LIMITATIONS—Continued

(values are in metric tons)

| Species | Apportionments and allocations by area/season/processor/gear | Ratio of 1995-1997 non-exempt AFA CV catch to 1995-1997 TAC | 2007 TAC | 2007 non-exempt AFA catcher vessel sideboard |
|---|---|---|---|---|
| | August 25 - September 15 | | | |
| | Shumagin (610) | 0.6112 | 7,995 | 4,887 |
| | Chirikof (620) | 0.1427 | 2,304 | 329 |
| | Kodiak (630) | 0.2438 | 4,889 | 1,192 |
| | D Season (W/C areas only) | | | |
| | October 1 - November 1 | | | |
| | Shumagin (610) | 0.6112 | 7,995 | 4,887 |
| | Chirikof (620) | 0.1427 | 2,304 | 329 |
| | Kodiak (630) | 0.2438 | 4,889 | 1,192 |
| | Annual | | | |
| | WYK (640) | 0.3499 | 1,398 | 489 |
| | SEO (650) | 0.3499 | 6,157 | 2,154 |
| Pacific cod | A Season[1] | | | |
| | January 1 - June 10 | | | |
| | W inshore | 0.1423 | 10,876 | 1,548 |
| | W offshore | 0.1026 | 1,208 | 124 |
| | C inshore | 0.0722 | 15,339 | 1,107 |
| | C offshore | 0.0721 | 1,704 | 123 |
| | B Season[2] | | | |
| | September 1 - December 31 | | | |
| | W inshore | 0.1423 | 7,251 | 1,032 |
| | W offshore | 0.1026 | 806 | 83 |
| | C inshore | 0.0722 | 10,226 | 738 |
| | C offshore | 0.0721 | 1,136 | 82 |
| | Annual | | | |
| | E inshore | 0.0079 | 3,346 | 26 |
| | E offshore | 0.0078 | 372 | 3 |
| Flatfish deep-water | W | 0 | 420 | 0 |
| | C | 0.0670 | 4,163 | 279 |
| | E | 0.0171 | 4,124 | 71 |
| Rex sole | W | 0.0010 | 1,147 | 1 |
| | C | 0.0402 | 5,466 | 219 |
| | E | 0.0153 | 2,507 | 38 |
| Flathead sole | W | 0.0036 | 2,000 | 7 |
| | C | 0.0261 | 5,000 | 131 |
| | E | 0.0048 | 2,148 | 10 |
| Flathead shallow-water | W | 0.0156 | 4,500 | 70 |
| | C | 0.0598 | 13,000 | 777 |
| | E | 0.0126 | 2,472 | 31 |
| Arrowtooth flounder | W | 0.0021 | 8,000 | 17 |
| | C | 0.0309 | 30,000 | 927 |
| | E | 0.0020 | 5,000 | 10 |
| Sablefish | W trawl gear | 0 | 494 | 0 |
| | C trawl gear | 0.0720 | 1,238 | 89 |
| | E trawl gear | 0.0488 | 283 | 14 |
| Pacific ocean perch | W | 0.0623 | 4,244 | 264 |
| | C | 0.0866 | 7,612 | 659 |
| | E | 0.0466 | 2,780 | 130 |
| Shortraker rockfish | W | 0 | 153 | 0 |
| | C | 0.0237 | 353 | 8 |
| | E | 0.0124 | 337 | 4 |
| Rougheye rockfish | W | 0 | 136 | 0 |
| | C | 0.0237 | 611 | 14 |
| | E | 0.0124 | 241 | 3 |
| Other rockfish | W | 0.0034 | 557 | 2 |

TABLE 13 - FINAL 2007 GOA NON-EXEMPT AMERICAN FISHERIES ACT CATCHER VESSEL (CV) GROUNDFISH HARVEST SIDEBOARD LIMITATIONS—Continued

(values are in metric tons)

| Species | Apportionments and allocations by area/season/processor/gear | Ratio of 1995-1997 non-exempt AFA CV catch to 1995-1997 TAC | 2007 TAC | 2007 non-exempt AFA catcher vessel sideboard |
|---|---|---|---|---|
| | C | 0.2065 | 386 | 80 |
| | E | 0 | 519 | 0 |
| Northern rockfish | W | 0.0003 | 1,439 | 0 |
| | C | 0.0336 | 3,499 | 128 |
| Pelagic shelf rockfish | W | 0.0001 | 1,466 | 0 |
| | C | 0 | 3,325 | 0 |
| | E | 0.0067 | 751 | 5 |
| Thornyhead rockfish | W | 0.0308 | 513 | 16 |
| | C | 0.0308 | 989 | 30 |
| | E | 0.0308 | 707 | 22 |
| Big skates | W | 0.0090 | 695 | 6 |
| | C | 0.0090 | 2,250 | 20 |
| | E | 0.0090 | 599 | 5 |
| Longnose skates | W | 0.0090 | 65 | 1 |
| | C | 0.0090 | 1,969 | 18 |
| | E | 0.0090 | 861 | 8 |
| Other skates | GW | 0.0090 | 1,617 | 15 |
| DSR | SEO | 0,0020 | 410 | 1 |
| Atka mackerel | Gulfwide | 0.0309 | 1,500 | 46 |
| Other species | Gulfwide | 0.0090 | 4,500 | 41 |

[1] The Pacific cod A season for trawl gear does not open until January 20.
[2] The Pacific cod B season for trawl gear closes November 1.

TABLE 14 - FINAL 2008 GOA NON-EXEMPT AMERICAN FISHERIES ACT CATCHER VESSEL (CV) GROUNDFISH HARVEST SIDEBOARD LIMITATIONS

(values are in metric tons)

| Species | Apportionments and allocations by area/season/processor/gear | Ratio of 1995-1997 non-exempt AFA CV catch to 1995-1997 TAC | 2008 TAC | 2008 non-exempt AFA CV sideboard limit |
|---|---|---|---|---|
| Pollock | A Season (W/C areas only) | | | |
| | January 20 - February 25 | | | |
| | Shumagin (610) | 0.6112 | 5,466 | 3,341 |
| | Chirikof (620) | 0.1427 | 8,915 | 1,272 |
| | Kodiak (630) | 0.2438 | 4,023 | 981 |
| | B Season (W/C areas only) | | | |
| | March 10 - May 31 | | | |
| | Shumagin (610) | 0.6112 | 5,466 | 3,341 |
| | Chirikof (620) | 0.1427 | 10,814 | 1,543 |
| | Kodiak (630) | 0.2438 | 2,124 | 518 |
| | C Season (W/C areas only) | | | |
| | August 25 - September 15 | | | |
| | Shumagin (610) | 0.6112 | 9,688 | 5,921 |
| | Chirikof (620) | 0.1427 | 2,304 | 329 |
| | Kodiak (630) | 0.2438 | 5,924 | 1,444 |
| | D Season (W/C areas only) | | | |
| | October 1 - November 1 | | | |
| | Shumagin (610) | 0.6112 | 9,688 | 5,921 |
| | Chirikof (620) | 0.1427 | 2,304 | 329 |
| | Kodiak (630) | 0.2438 | 5,924 | 1,444 |
| | Annual | | | |
| | WYK (640) | 0.3499 | 1,694 | 593 |

TABLE 14 - FINAL 2008 GOA NON-EXEMPT AMERICAN FISHERIES ACT CATCHER VESSEL (CV) GROUNDFISH HARVEST SIDEBOARD LIMITATIONS—Continued

(values are in metric tons)

| Species | Apportionments and allocations by area/season/processor/gear | Ratio of 1995-1997 non-exempt AFA CV catch to 1995-1997 TAC | 2008 TAC | 2008 non-exempt AFA CV sideboard limit |
|---|---|---|---|---|
| | SEO (650) | 0.3499 | 6,157 | 2,154 |
| Pacific cod | A Season[1] | | | |
| | January 1 - June 10 | | | |
| | W inshore | 0.1423 | 11,278 | 1,605 |
| | W offshore | 0.1026 | 1,253 | 129 |
| | C inshore | 0.0722 | 15,905 | 1,148 |
| | C offshore | 0.0721 | 1,767 | 127 |
| | B Season[2] | | | |
| | September 1 - December 31 | | | |
| | W inshore | 0.1423 | 7,519 | 1,070 |
| | W offshore | 0.1026 | 835 | 86 |
| | C inshore | 0.0722 | 10,603 | 766 |
| | C offshore | 0.0721 | 1,178 | 85 |
| | Annual | | | |
| | E inshore | 0.0079 | 3,470 | 27 |
| | E offshore | 0.0078 | 386 | 3 |
| Flatfish deep-water | W | 0 | 430 | 0 |
| | C | 0.0670 | 4,296 | 288 |
| | E | 0.0171 | 4,257 | 73 |
| Rex sole | W | 0.0010 | 1,122 | 1 |
| | C | 0.0402 | 5,327 | 214 |
| | E | 0.0153 | 2,451 | 38 |
| Flathead sole | W | 0.0036 | 2,000 | 7 |
| | C | 0.0261 | 5,000 | 131 |
| | E | 0.0048 | 2,258 | 11 |
| Flathead shallow-water | W | 0.0156 | 4,500 | 70 |
| | C | 0.0598 | 13,000 | 777 |
| | E | 0.0126 | 2,472 | 31 |
| Arrowtooth flounder | W | 0.0021 | 8,000 | 17 |
| | C | 0.0309 | 30,000 | 927 |
| | E | 0.0020 | 5,000 | 10 |
| Sablefish | W trawl gear | 0 | 492 | 0 |
| | C trawl gear | 0.0720 | 1,232 | 89 |
| | E trawl gear | 0.0488 | 281 | 14 |
| Pacific ocean perch | W | 0.0623 | 4,291 | 267 |
| | C | 0.0866 | 7,694 | 666 |
| | E | 0.0466 | 2,812 | 131 |
| Rougheye rockfish | W | 0 | 153 | 0 |
| | C | 0.0237 | 353 | 8 |
| | E | 0.0124 | 337 | 4 |
| Shortraker rockfish | W | 0 | 137 | 0 |
| | C | 0.0237 | 614 | 15 |
| | E | 0.0124 | 242 | 3 |
| Other rockfish | W | 0.0034 | 577 | 2 |
| | C | 0.2065 | 386 | 80 |
| | E | 0 | 519 | 0 |
| Northern rockfish | W | 0.0003 | 1,383 | 0 |
| | C | 0.0336 | 3,365 | 123 |
| Pelagic shelf rockfish | W | 0.0001 | 1,752 | 0 |
| | C | 0 | 3,973 | 0 |
| | E | 0.0067 | 897 | 6 |
| Thornyhead rockfish | W | 0.0308 | 513 | 16 |
| | C | 0.0308 | 989 | 30 |

TABLE 14 - FINAL 2008 GOA NON-EXEMPT AMERICAN FISHERIES ACT CATCHER VESSEL (CV) GROUNDFISH HARVEST SIDEBOARD LIMITATIONS—Continued

(values are in metric tons)

| Species | Apportionments and allocations by area/season/processor/gear | Ratio of 1995-1997 non-exempt AFA CV catch to 1995-1997 TAC | 2008 TAC | 2008 non-exempt AFA CV sideboard limit |
|---|---|---|---|---|
| | E | 0.0308 | 707 | 22 |
| Big skates | W<br>C<br>E | 0.0090<br>0.0090<br>0.0090 | 695<br>2,250<br>599 | 6<br>20<br>5 |
| Longnose skates | W<br>C<br>E | 0.0090<br>0.0090<br>0.0090 | 65<br>1,969<br>861 | 1<br>18<br>8 |
| Other skates | GW | 0.0090 | 1,617 | 15 |
| DSR | SEO | 0,0020 | 410 | 1 |
| Atka mackerel | Gulfwide | 0.0309 | 1,500 | 46 |
| Other species | Gulfwide | 0.0090 | 4,500 | 41 |

[1] The Pacific cod A season for trawl gear does not open until January 20.
[2] The Pacific cod B season for trawl gear closes November 1.

The PSC sideboard limits for non-exempt AFA catcher vessels in the GOA are based on the aggregate retained groundfish catch by non-exempt AFA catcher vessels in each PSC target category from 1995 through 1997 divided by the retained catch of all vessels in that fishery from 1995 through 1997 (§ 679.64(b)(4)). Table 15 lists these amounts.

TABLE 15 - FINAL 2007 AND 2008 NON-EXEMPT AMERICAN FISHERIES ACT CATCHER VESSEL PROHIBITED SPECIES CATCH (PSC) LIMITS FOR THE GOA

| PSC species | Season | Target fishery | Ratio of 1995-1997 non-exempt AFA CV retained catch to total retained catch | 2007 and 2008 PSC limit (mt) | 2007 and 2008 non-exempt AFA CV PSC limit (mt) |
|---|---|---|---|---|---|
| Halibut | Trawl 1st seasonal allowance | shallow-water | 0.34 | 450 | 153 |
| | January 20 - April 1 | deep-water | 0.07 | 100 | 7 |
| | Trawl 2nd seasonal allowance | shallow-water | 0.34 | 100 | 34 |
| | April 1- July 1 | deep-water | 0.07 | 300 | 21 |
| | Trawl 3rd seasonal allowance | shallow-water | 0.34 | 200 | 68 |
| | July 1 - September 1 | deep-water | 0.07 | 400 | 28 |
| | Trawl 4th seasonal allowance | shallow-water | 0.34 | 150 | 51 |
| | September 1 - October 1 | deep-water | 0.07 | 0 | 0 |
| | Trawl 5th seasonal allowance<br>October 1 - December 31 | all targets | 0.205 | 300 | 61 |

**Non-AFA Crab Vessel Groundfish Harvest Limitations**

Section 680.22 establishes groundfish catch limits for vessels with a history of participation in the Bering Sea snow crab fishery from using the increased flexibility provided by the Crab Rationalization Program to expand their level of participation in the GOA groundfish fisheries. These sideboard limits restrict these vessels' catch to their collective historical landings in each GOA groundfish fishery (except the fixed-gear sablefish fishery). Sideboard limits also will apply to catch made using a License Limitation Program (LLP) license derived from the history of a restricted vessel, even if that LLP is used on another vessel.

Sideboard limits for non-AFA crab vessels in the GOA are based on their traditional harvest levels of TAC in groundfish fisheries covered by the GOA FMP. Section 680.22 (d) and (e) base the groundfish sideboard limitations in the GOA on the retained catch by non-AFA crab vessels of each

sideboard species from 1996 through 2000 divided by the total retained harvest of that species over the same period. These amounts are listed in Table 16 for 2007 and in Table 17 for 2008. All targeted or incidental catch of sideboard species made by non-AFA crab vessels will be deducted from the sideboard limits in Tables 16 and 17. Vessels exempt from Pacific cod sideboards are those that landed less than 45,359 kg of Bering Sea snow crab and more than 500 mt of groundfish (in round weight equivalents) from the GOA between January 1, 1996, and December 31, 2000, and any vessel named on an LLP that was generated in whole or in part by the fishing history of a vessel meeting the criteria in § 680.22(a)(3).

TABLE 16 - FINAL 2007 GOA NON-AMERICAN FISHERIES ACT CRAB VESSEL GROUNDFISH HARVEST SIDEBOARD LIMITATIONS

(Values are rounded to nearest metric ton)

| Species | Apportionments and allocations by area/season/processor/gear | Ratio of 1996-2000 non-AFA crab vessel catch to 1996-2000 total harvest | Proposed 2007 TAC | 2007 non-AFA crab vessel sideboard limit |
|---|---|---|---|---|
| Pollock | A Season (W/C areas only) | | | |
| | January 20 - March 10 | | | |
| | Shumagin (610) | 0.0098 | 4,511 | 44 |
| | Chirikof (620) | 0.0031 | 7,357 | 23 |
| | Kodiak (630) | 0.0002 | 3,320 | 1 |
| | B Season (W/C areas only) | | | |
| | March 10 - May 31 | | | |
| | Shumagin (610) | 0.0098 | 4,511 | 44 |
| | Chirikof (620) | 0.0031 | 8,924 | 28 |
| | Kodiak (630) | 0.0002 | 1,753 | 0 |
| | C Season (W/C areas only) | | | |
| | August 25 - October 1 | | | |
| | Shumagin (610) | 0.0098 | 7,995 | 78 |
| | Chirikof (620) | 0.0031 | 2,304 | 7 |
| | Kodiak (630) | 0.0002 | 4,889 | 1 |
| | D Season (W/C areas only) | | | |
| | October 1 - November 1 | | | |
| | Shumagin (610) | 0.0098 | 7,995 | 78 |
| | Chirikof (620) | 0.0031 | 2,304 | 7 |
| | Kodiak (630) | 0.0002 | 4,889 | 1 |
| | Annual | | | |
| | WYK (640) | 0 | 1,398 | 0 |
| | SEO (650) | 0 | 6,157 | 0 |
| Pacific cod | A Season[1] | | | |
| | January 1 - June 10 | | | |
| | W inshore | 0.0902 | 10,876 | 981 |
| | W offshore | 0.2046 | 1,208 | 247 |
| | C inshore | 0.0383 | 15,339 | 587 |
| | C offshore | 0.2074 | 1,704 | 353 |
| | B Season[2] | | | |
| | September 1 - December 31 | | | |
| | W inshore | 0.0902 | 7,251 | 654 |
| | W offshore | 0.2046 | 806 | 165 |
| | C inshore | 0.0383 | 10,226 | 392 |
| | C offshore | 0.2074 | 1,136 | 236 |
| | Annual | | | |
| | E inshore | 0.0110 | 3,346 | 37 |
| | E offshore | 0 | 372 | 0 |
| Flatfish deep-water | W | 0.0035 | 420 | 1 |
| | C | 0 | 4,163 | 0 |
| | E | 0 | 4,124 | 0 |
| Rex sole | W | 0 | 1,147 | 0 |
| | C | 0 | 5,446 | 0 |
| | E | 0 | 2,507 | 0 |
| Flathead sole | W | 0.0002 | 2,000 | 0 |
| | C | 0.0004 | 5,000 | 2 |
| | E | 0 | 2,148 | 0 |
| Flathead shallow-water | W | 0.0059 | 4,500 | 27 |
| | C | 0.0001 | 13,000 | 1 |

TABLE 16 - FINAL 2007 GOA NON-AMERICAN FISHERIES ACT CRAB VESSEL GROUNDFISH HARVEST SIDEBOARD LIMITATIONS—Continued

(Values are rounded to nearest metric ton)

| Species | Apportionments and allocations by area/season/processor/gear | Ratio of 1996-2000 non-AFA crab vessel catch to 1996-2000 total harvest | Proposed 2007 TAC | 2007 non-AFA crab vessel sideboard limit |
|---|---|---|---|---|
| | E | 0 | 2,472 | 0 |
| Arrowtooth flounder | W | 0.0004 | 8,000 | 3 |
| | C | 0.0001 | 30,000 | 3 |
| | E | 0 | 5,000 | 0 |
| Sablefish | W trawl gear | 0 | 494 | 0 |
| | C trawl gear | 0 | 1,238 | 0 |
| | E trawl gear | 0 | 283 | 0 |
| Pacific ocean perch | W | 0 | 4,244 | 0 |
| | C | 0 | 7,612 | 0 |
| | E | 0 | 2,780 | 0 |
| Shortraker rockfish | W | 0.0013 | 153 | 0 |
| | C | 0.0012 | 353 | 0 |
| | E | 0.0009 | 337 | 0 |
| Rougheye rockfish | W | 0.0067 | 136 | 1 |
| | C | 0.0047 | 611 | 3 |
| | E | 0.0008 | 241 | 0 |
| Other rockfish | W | 0.0035 | 577 | 2 |
| | C | 0.0033 | 386 | 1 |
| | E | 0 | 519 | 0 |
| Northern rockfish | W | 0.0005 | 1,439 | 1 |
| | C | 0 | 3,499 | 0 |
| Pelagic shelf rockfish | W | 0.0017 | 1,466 | 2 |
| | C | 0 | 3,325 | 0 |
| | E | 0 | 751 | 0 |
| Thornyhead rockfish | W | 0.0047 | 513 | 2 |
| | C | 0.0066 | 989 | 7 |
| | E | 0.0045 | 707 | 3 |
| Big skate | W | 0.0392 | 695 | 27 |
| | C | 0.0159 | 2,250 | 36 |
| | E | 0 | 599 | 0 |
| Longnose skate | W | 0.0392 | 65 | 3 |
| | C | 0.0159 | 1,969 | 31 |
| | E | 0 | 861 | 0 |
| Other skates | GW | 0.0176 | 1,617 | 28 |
| DSR | SEO | 0 | 410 | 0 |
| Atka mackerel | Gulfwide | 0 | 1,500 | 0 |
| Other species | Gulfwide | 0.0176 | 4,500 | 79 |

[1] The Pacific cod A season for trawl gear does not open until January 20.
[2] The Pacific cod B season for trawl gear closes November 1.

TABLE 17- FINAL 2008 GOA NON-AMERICAN FISHERIES ACT CRAB VESSEL GROUNDFISH HARVEST SIDEBOARD LIMITATIONS

(values are rounded to nearest metric ton)

| Species | Apportionments and allocations by area/season/processor/gear | Ratio of 1996-2000 non-AFA crab vessel catch to 1996-2000 total harvest | 2008 TAC | 2008 non-AFA crab vessel sideboard limit |
|---|---|---|---|---|
| Pollock | A Season (W/C areas only) | | | |
| | January 20 - March 10 | | | |
| | Shumagin (610) | 0.0098 | 5,466 | 54 |
| | Chirikof (620) | 0.0031 | 8,915 | 28 |

TABLE 17- FINAL 2008 GOA NON-AMERICAN FISHERIES ACT CRAB VESSEL GROUNDFISH HARVEST SIDEBOARD LIMITATIONS—Continued

(values are rounded to nearest metric ton)

| Species | Apportionments and allocations by area/season/processor/gear | Ratio of 1996-2000 non-AFA crab vessel catch to 1996-2000 total harvest | 2008 TAC | 2008 non-AFA crab vessel sideboard limit |
|---|---|---|---|---|
| | Kodiak (630) | 0.0002 | 4,023 | 1 |
| | B Season (W/C areas only) | | | |
| | March 10 - May 31 | | | |
| | Shumagin (610) | 0.0098 | 5,466 | 54 |
| | Chirikof (620) | 0.0031 | 10,814 | 34 |
| | Kodiak (630) | 0.0002 | 2,124 | 0 |
| | C Season (W/C areas only) | | | |
| | August 25 - October 1 | | | |
| | Shumagin (610) | 0.0098 | 9,688 | 95 |
| | Chirikof (620) | 0.0031 | 2,304 | 7 |
| | Kodiak (630) | 0.0002 | 5,924 | 1 |
| | D Season (W/C areas only) | | | |
| | October 1 - November 1 | | | |
| | Shumagin (610) | 0.0098 | 9,688 | 95 |
| | Chirikof (620) | 0.0031 | 2,304 | 7 |
| | Kodiak (630) | 0.0002 | 5,924 | 1 |
| | Annual | | | |
| | WYK (640) | 0 | 1,694 | 0 |
| | SEO (650) | 0 | 6,157 | 0 |
| Pacific cod | A Season[1] | | | |
| | January 1 - June 10 | | | |
| | W inshore | 0.0902 | 11,278 | 1,017 |
| | W offshore | 0.2046 | 1,253 | 256 |
| | C inshore | 0.0383 | 15,905 | 609 |
| | C offshore | 0.2074 | 1,767 | 366 |
| | B Season[2] | | | |
| | September 1 - December 31 | | | |
| | W inshore | 0.0902 | 7,519 | 678 |
| | W offshore | 0.2046 | 835 | 171 |
| | C inshore | 0.0383 | 10,603 | 406 |
| | C offshore | 0.2074 | 1,178 | 244 |
| | Annual | | | |
| | E inshore | 0.0110 | 3,470 | 38 |
| | E offshore | 0 | 386 | 0 |
| Flatfish deep-water | W | 0.0035 | 430 | 2 |
| | C | 0 | 4,296 | 0 |
| | E | 0 | 4,257 | 0 |
| Rex sole | W | 0 | 1,122 | 0 |
| | C | 0 | 5,327 | 0 |
| | E | 0 | 2,551 | 0 |
| Flathead sole | W | 0.0002 | 2,000 | 0 |
| | C | 0.0004 | 5,000 | 2 |
| | E | 0 | 2,258 | 0 |
| Flathead shallow-water | W | 0.0059 | 4,500 | 27 |
| | C | 0.0001 | 13,000 | 1 |
| | E | 0 | 2,472 | 0 |
| Arrowtooth flounder | W | 0.0004 | 8,000 | 3 |
| | C | 0.0001 | 30,000 | 3 |
| | E | 0 | 5,000 | 0 |
| Sablefish | W trawl gear | 0 | 492 | 0 |
| | C trawl gear | 0 | 1,232 | 0 |
| | E trawl gear | 0 | 281 | 0 |
| Pacific ocean perch | W | 0 | 4,291 | 0 |
| | C | 0 | 7,694 | 0 |
| | E | 0 | 2,812 | 0 |

TABLE 17- FINAL 2008 GOA NON-AMERICAN FISHERIES ACT CRAB VESSEL GROUNDFISH HARVEST SIDEBOARD LIMITATIONS—Continued

(values are rounded to nearest metric ton)

| Species | Apportionments and allocations by area/season/processor/gear | Ratio of 1996-2000 non-AFA crab vessel catch to 1996-2000 total harvest | 2008 TAC | 2008 non-AFA crab vessel sideboard limit |
|---|---|---|---|---|
| Shortraker rockfish | W | 0.0013 | 153 | 0 |
| | C | 0.0012 | 353 | 0 |
| | E | 0.0009 | 337 | 0 |
| Rougheye rockfish | W | 0.0067 | 137 | 1 |
| | C | 0.0047 | 614 | 3 |
| | E | 0.0008 | 242 | 0 |
| Other rockfish | W | 0.0035 | 577 | 2 |
| | C | 0.0033 | 386 | 1 |
| | E | 0 | 519 | 0 |
| Northern rockfish | W | 0.0005 | 1,383 | 1 |
| | C | 0 | 3,365 | 0 |
| Pelagic shelf rockfish | W | 0.0017 | 1,752 | 3 |
| | C | 0 | 3,973 | 0 |
| | E | 0 | 897 | 0 |
| Thornyhead rockfish | W | 0.0047 | 513 | 2 |
| | C | 0.0066 | 989 | 7 |
| | E | 0.0045 | 707 | 3 |
| Big skate | W | 0.0392 | 695 | 27 |
| | C | 0.0159 | 2,250 | 36 |
| | E | 0 | 599 | 0 |
| Longnose skates | W | 0.0392 | 65 | 3 |
| | C | 0.0159 | 1,969 | 31 |
| | E | 0 | 861 | 0 |
| Other skates | GW | 0.0176 | 1,617 | 28 |
| Demersal shelf rockfish | SEO | 0 | 410 | 0 |
| Atka mackerel | Gulfwide | 0 | 1,500 | 0 |
| Other species | Gulfwide | 0.0176 | 4,500 | 79 |

[1] The Pacific cod A season for trawl gear does not open until January 20.
[2] The Pacific cod B season for trawl gear closes November 1.

**Rockfish Program Groundfish Sideboard Limitations and Halibut Mortality Limitations**

Section 679.82(d)(7) establishes sideboards to limit the ability of participants eligible for the Rockfish Program to catch fish in fisheries other than the Central GOA rockfish fisheries. The Rockfish Program provides certain economic advantages to harvesters. Harvesters could use this economic advantage to increase their participation in other fisheries, adversely affecting the participants in other fisheries. These final sideboards limit the total amount of catch in other groundfish fisheries that could be taken by eligible harvesters and limit the amount of halibut mortality to historic levels. The sideboard measures are in effect only during the month of July. Historically, the Central GOA trawl rockfish fisheries opened in July. The sideboards are designed to restrict fishing during the historical season for the fishery, but allow eligible rockfish harvesters to participate in fisheries before or after the historical rockfish season. The two categories of sideboard limits are catch amount constraints and closures of specific directed fisheries during July. The sideboard provisions are discussed in detail in the Rockfish Program proposed rule (71 FR 33040, June 7, 2006) and final rule (71 FR 67210, November 20, 2006). Tables 18 and 19 list the final 2007 and 2008 harvest limits for rockfish in the WYK District and the Western Regulatory Area. Table 20 lists the final 2007 and 2008 halibut mortality limits for the Western and Central Regulatory Areas and the WYK District.

TABLE 18 - FINAL 2007 ROCKFISH PROGRAM HARVEST LIMITS BY SECTOR FOR WEST YAKUTAT DISTRICT AND WESTERN REGULATORY AREA BY THE CATCHER/PROCESSOR (C/P) AND CATCHER VESSEL (CV) SECTORS

(values are rounded to nearest metric ton)

| Management Area | Fishery | C/P sector (% of TAC) | CV sector (% of TAC) | 2007 TAC | 2007 C/P limit | 2007 CV limit |
|---|---|---|---|---|---|---|
| West Yakutat District | Pelagic shelf rockfish | 72.4 | 1.7 | 307 | 222 | 5 |
| | Pacific ocean perch | 76.0 | 2.9 | 1,140 | 866 | 33 |
| WesternRegulatory Area | Pelagic shelf rockfish | 63.3 | 0.0 | 1,466 | 928 | 0 |
| | Pacific ocean perch | 61.1 | 0.0 | 4,244 | 2,593 | 0 |
| | Northern rockfish | 78.9 | 0.0 | 1,439 | 1,135 | 0 |

TABLE 19 - FINAL 2008 ROCKFISH PROGRAM HARVEST LIMITS BY SECTOR FOR WEST YAKUTAT DISTRICT AND WESTERN REGULATORY AREA BY THE CATCHER/PROCESSOR (C/P) AND CATCHER VESSEL (CV) SECTORS

(values are rounded to nearest metric ton)

| Management Area | Fishery | C/P sector (% of TAC) | CV sector (% of TAC) | 2008 TAC | 2008 C/P limit | 2008 CV limit |
|---|---|---|---|---|---|---|
| West Yakutat District | Pelagic shelf rockfish | 72.4 | 1.7 | 366 | 265 | 5 |
| | Pacific ocean perch | 76.0 | 2.9 | 1,153 | 876 | 25 |
| Western GOA | Pelagic shelf rockfish | 63.3 | 0.0 | 1,752 | 1,109 | 0 |
| | Pacific ocean perch | 61.1 | 0.0 | 4,291 | 2,622 | 0 |
| | Northern rockfish | 78.9 | 0.0 | 1,383 | 1,091 | 0 |

TABLE 20 - FINAL 2007 AND 2008 ROCKFISH PROGRAM HALIBUT MORTALITY LIMITS FOR THE CATCHER/PROCESSOR AND CATCHER VESSEL SECTORS

(values are rounded to nearest metric ton)

| Sector | Shallow-water complex halibut PSC sideboard ratio | Deep-water complex halibut PSC sideboard ratio | Annual halibut mortality limit (mt) | Annual shallow-water complex halibut PSC sideboard limit (mt) | Annual deep-water complex halibut PSC sideboard limit (mt) |
|---|---|---|---|---|---|
| Catcher/processor | 3.99 | 0.54 | 2,000 | 80 | 11 |
| Catcher vessel | 1.08 | 6.32 | 2,000 | 22 | 126 |

**Directed Fishing Closures**

Pursuant to § 679.20(d)(1)(i), if the Regional Administrator determines (1) that any allocation or apportionment of a target species or ''other species'' category allocated or apportioned to a fishery will be reached or, (2) with respect to pollock and Pacific cod, an allocation or apportionment to an inshore or offshore component allocation will be reached, the Regional Administrator may establish a DFA for that species or species group. If the Regional Administrator establishes a DFA and that allowance is or will be reached before the end of the fishing year, NMFS will prohibit directed fishing for that species or species group in the specified GOA regulatory area or district (§ 679.20(d)(1)(iii)).

The Regional Administrator has determined that the following TAC amounts in Table 21 are necessary as incidental catch to support other anticipated groundfish fisheries for the 2007 and 2008 fishing years.

TABLE 21 - DIRECTED FISHING CLOSURES IN THE GOA 2007 AND 2008

(Amounts needed for incidental catch in other directed fisheries are in metric tons)

| Target | Regulatory Area | Gear/Component | Amount |
|---|---|---|---|
| Atka mackerel | entire GOA | all | 1,500 |
| Thornyhead rockfish | entire GOA | all | 2,209 |
| Shortraker rockfish | entire GOA | all | 843 |

TABLE 21 - DIRECTED FISHING CLOSURES IN THE GOA 2007 AND 2008—Continued

(Amounts needed for incidental catch in other directed fisheries are in metric tons)

| Target | Regulatory Area | Gear/Component | Amount |
|---|---|---|---|
| Rougheye rockfish | entire GOA | all | 988 (2007)<br>993 (2008) |
| Other rockfish | entire GOA | all | 1,482 |
| Sablefish | entire GOA | trawl | 2,015 (2007)<br>2,004 (2008) |
| Big skates | entire GOA | all | 3,544 |
| Longnose skates | entire GOA | all | 2,895 |
| Other skates | entire GOA | all | 1,617 |
| Pollock | entire GOA | all/offshore | unknown[1] |

[1]Pollock is closed to directed fishing in the GOA by the offshore component under § 679.20(a)(6)(i).

Consequently, in accordance with § 679.20(d)(1)(i), the Regional Administrator establishes the DFA for the species or species groups listed in Table 21 as zero. Therefore, in accordance with § 679.20(d)(1)(iii), NMFS is prohibiting directed fishing for those species, regulatory areas, gear types, and components listed in Table 21. These closures will remain in effect through 2400 hrs, A.l.t., December 31, 2008.

Section 679.64(b)(5) provides for management of AFA catcher vessel groundfish harvest limits and PSC bycatch limits using directed fishing closures and PSC closures according to procedures set out at §§ 679.20(d)(1)(iv), 679.21(d)(8), and 679.21(e)(3)(v). The Regional Administrator has determined that, in addition to the closures listed above, many of the non-exempt AFA catcher vessel sideboard limits listed in Tables 13 and 14 are necessary as incidental catch to support other anticipated groundfish fisheries for the 2007 and 2008 fishing years. In accordance with § 679.20(d)(1)(iv), the Regional Administrator sets the DFAs for the species and species groups in Table 22 at zero. Therefore, in accordance with § 679.20(d)(1)(iii), NMFS is prohibiting directed fishing by non-exempt AFA catcher vessels in the GOA for the species and specified areas set out in Table 22. These closures will remain in effect through 2400 hrs, A.l.t., December 31, 2008.

TABLE 22 - 2007 AND 2008 NON-EXEMPT AFA CATCHER VESSEL SIDEBOARD DIRECTED FISHING CLOSURES IN THE GOA

(Amounts needed for incidental catch in other directed fisheries are in metric tons)

| Species | Regulatory Area/District | Gear | Amount |
|---|---|---|---|
| Pacific cod | Eastern | all | 26 (inshore 2007)<br>27 (inshore 2008)<br>3 (offshore 2007)<br>3 (offshore 2008) |
| Deep-water flatfish | Western | all | 0 |
| Rex sole | Western | all | 1 |
| Flathead sole | Eastern and Western | all | 10 and 7 (2007)<br>11 and 7 (2008) |
| Shallow-water flatfish | Eastern | all | 31 |
| Arrowtooth flounder | Eastern and Western | all | 10 and 17 |
| Northern rockfish | Western | all | 0 |
| Pelagic shelf rockfish | entire GOA | all | 0(W), 0(C), 5(E) in 2007<br>0(W), 0(C), 6(E) in 2008 |
| Demersal shelf rockfish | SEO District | all | 1 |

Section 680.22 provides for the management of non-AFA crab vessel groundfish harvest limits using directed fishing closures in accordance with § 680.22(e)(2) and (3). The Regional Administrator has determined that the non-AFA crab vessel sideboards listed in Tables 16 and 17 are insufficient to support a directed fishery and set the sideboard DFA at zero, with the exception of pollock in the Western Regulatory Area and Pacific cod in the Western and Central Regulatory Areas. Therefore in accordance with § 680.22(e)(3), NMFS is prohibiting directed fishing by non-AFA crab vessels in the GOA for all species and species groups listed in Tables 16 and

17, with the exception of pollock in the Western Regulatory Area and Pacific cod in the Western and Central Regulatory Areas.

Section 679.82 provides for the management of Rockfish Program sideboard limits using directed fishing closures in accordance with § 679.82(d)(7)(i) and (ii). The Regional Administrator has determined that the catcher vessel sideboards listed in Tables 18 and 19 are insufficient to support a directed fishery and set the sideboard DFA at zero. Therefore, NMFS is closing directed fishing for pelagic shelf rockfish and Pacific ocean perch in the WYK District and the Western Regulatory Area and northern rockfish in the Western Regulatory Area by catcher vessels participating in the Central GOA Rockfish Program during the month of July in 2007 and 2008. These closures will remain in effect through 2400 hrs, A.l.t., December 31, 2008.

Under authority of the final 2006 specifications (71 FR 10870, March 3, 2006), pollock fishing opened on January 20, 2006, for amounts specified in that notice. NMFS has since closed Statistical Area 610 to directed fishing for pollock effective 1200 hrs, A.l.t., January 22, 2007 (72 FR 2462, January 19, 2007) until 1200 hrs, A.l.t., February 5, 2007 (72 FR 6177, February 09, 2007), and 1200 hrs, A.l.t., February 7, 2007, until 1200 hrs, A.l.t., February 8, 2007 (72 FR 6694, February 13, 2007), and 1200 hrs, A.l.t., February 10, 2007, until 1200 hrs, A.l.t., March 10, 2007. NMFS closed Statistical Area 630 to directed fishing for pollock effective 1200 hrs, A.l.t., January 22, 2007 (72 FR 2793, January 23, 2007) until 1200 hrs, A.l.t., February 6, 2007 (72 FR 5346, February 6, 2007), and 1200 hrs, A.l.t., February 8, 2007, until 1200 hrs, A.l.t, February 12, 2007 (72 FR 7353, February 15, 2007), and 1200 hrs, A.l.t., February 14, 2007, until 1200 hrs, A.l.t., February 20, 2007 (72 FR 8132, February 23, 2007) and 1200 hrs, A.l.t., February 22, 2007, until 1200 hrs, A.l.t., March 10, 2007. NMFS prohibited directed fishing for the A season allowance of the 2007 Pacific cod sideboard limits apportioned to non AFA crab vessels catching Pacific cod for processing by the inshore component in the Central Regulatory Area of the GOA, effective 12 noon, A.l.t., January 24, 2007 until 1200 hrs, A.l.t., September 1, 2007 (72 FR 3748, January 26, 2007). NMFS prohibited directed fishing for the A season allowance of the 2007 Pacific cod sideboard limits apportioned to non AFA crab vessels catching Pacific cod for processing by the inshore component in the Western Regulatory Area of the GOA, effective 12 noon, A.l.t., February 16, 2007 until 1200 hrs, A.l.t., September 1, 2007 (72 FR 7750, February 20, 2007). NMFS prohibited directed fishing for Pacific cod by vessels catching Pacific cod for processing by the offshore component of the Western Regulatory Area of the GOA, effective 12 noon, A.l.t., February 14, 2007 until 1200 hrs, A.l.t., September 1, 2007 (72 FR 7749, February 20, 2007). NMFS prohibited directed fishing for Pacific cod by vessels catching Pacific cod for processing by the offshore component of the Central Regulatory Area of the GOA, effective 12 noon, A.l.t., February 14, 2007 until 1200 hrs, A.l.t., September 1, 2007 (72 FR 7750, February 20, 2007). NMFS rescinds the closure in the Chiniak Gully Research Area of the GOA to all commercial trawl fishing and testing of trawl gear from August 1 to September 20, 2007 (72 FR 7751, February 20, 2007). While these closures are in effect, the maximum retainable amounts at § 679.20(e) and (f) apply at any time during a fishing trip. These closures to directed fishing are in addition to closures and prohibitions found in regulations at 50 CFR part 679. NMFS may implement other closures during the 2007 and 2008 fishing years as necessary for effective conservation and management.

**Response to Comments**

NMFS received 2 letters of comment (16 comments) in response to proposed the 2007 and 2008 harvest specifications. These comments are summarized and responded to below.

*Comment 1:* The proposed harvest specifications and accompanying Alaska Groundfish Harvest Specifications Environmental Impact Statement (EIS) do not represent a substantial implementation of the Alaska Groundfish Fisheries Final Programmatic Supplemental Environmental Impact Statement (PSEIS) policy statement, but rather a transparent attempt to indemnify the agency against the inadequacies of the status quo harvest strategy. The proposed harvest specifications lack the perspective of the ecosystem-based policy framework outlined in the PSEIS because there are no explicit procedures in the TAC-setting process to address the impacts of single-species fishing strategies on dependent and related species and their habitats in an ecosystem context. Therefore, the policy framework outlined in the PSEIS has not been implemented in the regulations governing the operation of the groundfish fisheries. Under the proposed harvest specifications, ecosystem concerns would remain at best ancillary to the process of allocating fish and maximizing short-term economic benefits.

*Response:* The preferred harvest strategy alternative described in the EIS is derived from the policy adopted as the preferred alternative in the PSEIS (see **ADDRESSES**) and is one of the actions necessary to implement that policy statement. Ecosystem concerns are integral to the EIS analysis. The purpose of the EIS is to describe the potential environmental impacts of the alternative harvest strategies, including an analysis of the potential impacts of these alternatives on ecosystem components and the ecosystem as a whole.

In addition to the EIS analysis, all available scientific information on the ecosystem is analyzed and presented to decision-makers and the public on an annual basis during the harvest specifications process. The annual SAFE reports, which provide the scientific information to support the harvest specifications for each species, include ecosystem considerations sections that describe the role of each target species in the ecosystem. The SAFE report also contains a separate ''Ecosystems Considerations'' chapter.

Groundfish fisheries management, including the harvest specification process, takes account of ecosystem requirements related to predation, competition, and habitat to provide protection for ecosystem components. Under the harvest strategy, the determination of annual harvest specifications incorporates ecosystem considerations, in the face of uncertainty in the quantitative links between species. The most significant ecosystem considerations are (1) the upper end of the OY range in the GOA, which imposes a constraint on total biomass removal, and (2) OFLs that prevent overfishing of each stock. A species' OFL is a harvest limit rather than a target and ABCs are set below OFLs. The tier system sets maximum ABCs and managers can set actual ABCs lower for ecosystem considerations. TACs never exceed ABCs and are frequently set at lower levels. TACs can also be adjusted downward for ecosystem considerations. Additionally, managers have established harvest control rules for pollock, Pacific cod, and Atka mackerel that prohibit directed fishing at low biomass levels, to account for Steller sea lion prey needs. TACs and actual catches, especially in the GOA, are often lower than ABCs to protect other species, especially halibut, that may be taken as bycatch. Managers frequently restrict

directed fishing for many species before TACs are reached to comply with PSC limits. Inseason management closes directed fisheries when TACs are reached, and restricts fishing in other fisheries taking the species as bycatch when OFLs are approached.

As noted below in the response to Comment 2, the groundfish management framework includes many measures, in addition to the harvest strategy, to mitigate the ecosystem impacts of the groundfish fisheries.

*Comment 2:* Existing management measures may be construed as consistent with an ecosystem-based approach, but they do not address major ecosystem impacts of the fisheries as promulgated in the annual catch specifications.

*Response:* Existing management measures address major ecosystem impacts of the fisheries, and the Council and NMFS are engaged in an ongoing effort to improve the ways this is done.

The existing regulatory framework imposes many constraints on fishing activity, including time, area, and gear restrictions, in order to mitigate or control ecosystem impacts created by fishing activity. Regulations impose maximum retainable amount (MRA) limits on the volume of bycatch a vessel may deliver or have onboard. Prohibited species catch (PSC) regulations impose limits on harvests of crab, salmon, herring, and halibut, and restrict fishing activity once those limits are reached. Important restrictions have been imposed on key fisheries to limit competition for Steller sea lion prey and to protect Steller sea lion critical habitat. The Council and NMFS have adopted numerous measures to limit bycatch and control the discards of low value fish by-products. Seabirds attracted to longlines are protected by mandatory gear requirements, such as streamers, meant to reduce incidental takes.

NMFS and the Council are continuing to develop ecosystem management measures for the groundfish fisheries. The Council has created a committee to inform them of ecosystem developments and to assist in formulating positions with respect to ecosystem-based management. The Council has taken the lead in the establishment of the interagency Alaska Marine Ecosystem Forum to improve inter-agency coordination and communication on marine ecosystem issues. The SSC has begun to hold annual ecosystem scientific meetings at the February Council meetings. In addition to exploring how to develop ecosystem management efforts, the Council and NMFS continue to take account of ecosystem impacts of fishing activity as available information allows. For example, the Council is currently consulting under the Endangered Species Act (ESA) for Steller sea lions, sperm and humpback whales. Ecosystem protection is supported by an extensive research program by the Alaska Fisheries Science Center (AFSC) into ecosystem components and integrated ecosystem functioning. Exempted fishing permits (EFPs) are issued to research halibut excluder devices.

Additionally, the EIS considers other actions taken to manage the fisheries, including reasonable future fisheries management actions, as these are relevant to the environmental consequences of the harvest strategy alternatives. The Council and NMFS have processes consistent with National Environmental Policy Act (NEPA) to evaluate each action to regulate other aspects of the fisheries. The overall fishery management policy within which the harvest strategies fall has been evaluated in the PSEIS. Moreover, NMFS and the Council evaluated each management measure at the time it was adopted in the relevant NEPA document. Considering different management measures in separate actions allows for more careful analysis of alternatives and the implications of each, and is often less confusing to the public. The Council and NMFS are actively evaluating a wide range of new management measures through these processes and will continue to do so.

*Comment 3:* Levels of exploitation on single stocks are set with no explicit consideration of the impacts of dependent, competing species in the food web or other impacts on associated species that flow from the exploitation of a relative few commercially desirable species. The single species $F_{40\%}$ policy ignores effects on the ecosystem and simply assumes that individual target species can be fished to the maximum sustainable yield (MSY) without significant consequences to other species in the food web.

*Response:* The harvest strategy incorporates a key principle of ecosystem-based fisheries management by preserving individual stocks and preventing overfishing of those stocks. This is important for protecting ecosystem components that depend on these individual stocks. The effects of the groundfish fisheries and fishing rates are analyzed in the EIS and the annual SAFE reports.

The tier system in the FMP and the harvest specifications process lead to TACs associated with fishing rates that are less than $F_{MSY}$. $F_{OFL}$ is never greater than $F_{MSY}$, or an appropriate $F_{MSY}$ proxy. Average multi-year fishery harvest rates fall below FMSY because the tier system treats $F_{OFL}$ as a limit rather than a target. The fishing rates associated with maximum permissible ABC, actual ABC, and the TAC, all fall below the $F_{OFL}$, providing a margin between the actual F and the $F_{MSY}$. Moreover, as discussed in response to Comment 2, other management measures often constrain actual catches and fishing rates below the TACs or the fishing rates associated with the TACs.

With current levels of information, we cannot precisely specify the margin or threshold between $F_{OFL}$ and actual harvest rate that provides the appropriate level of protection for various ecosystem properties. The AFSC continues to develop and improve scientific information in the Ecosystems Considerations section of the SAFE report. New information added in 2006 included the relationship between predation/production and fishing/production, a metric proposed to evaluate the management implications of potential exploitation of forage species, and a metric proposed to evaluate the ''footprint'' of individual fisheries.

The AFSC also continues to develop and improve several multispecies and ecosystem models to predict the possible effects of fishing and/or climate on ecosystem processes. Ecosystem modeling is extremely complex, and the incorporation of ecosystem considerations into the harvest specifications process is an evolving process. The AFSC is advancing this process through the development of multispecies fish stock assessment models that include predation, ecosystem mass-balance and simulation models, and single-species stock assessment models that include predation. The AFSC briefed the Groundfish Plan Teams on the results of these analyses to help them in their deliberations in the harvest specifications process.

*Comment 4:* Selective removals of species and large differences in catch rates for managed stocks may be responsible for significant and lasting changes in the structure of groundfish assemblages and food webs in the North Pacific, as seen in other ecosystems. Selective extraction of a relatively few high-value species may provide a competitive opportunity for ''under-utilized'' species such as arrowtooth flounder, which appear to have increased dramatically since the 1970s. NMFS consistently attributes regional stock declines and broader system changes to the weather (''regime

shifts''), a transparent stratagem that serves to justify the status quo and absolve the agency of responsibility for fishery-related systemic changes.

*Response:* NMFS analyzes and considers the interactions among fish species in its evaluations of the impacts of groundfish fishing. The nature of competitive interactions among species is an area of ongoing research by the AFSC. These issues are discussed in the ecosystem sections of individual species SAFE reports and by the Plan Teams as they formulate their ABC recommendations.

Species interactions are complex and imperfectly understood in the North Pacific. The AFSC is collaborating to develop a detailed, age-structured, multispecies statistical model to study this complex interaction of pollock and arrowtooth flounder. This ''cultivation/depensation'' model is expected to be completed in the near future. In December 2006, a Groundfish Plan Team leader briefed the Council and its SSC and AP on the complex interactions between pollock and arrowtooth flounder and on the potential application of this model whereby a species such as pollock ''cultivates'' its young by preying on species that would eat its young.

Regime shifts remain an important consideration. Regime shifts are well documented; these changes in climate are believed to have affected relative abundance of species in the past, and are expected to do so in the future.

*Comment 5:* NMFS fails to analyze the cumulative and synergistic effects of selective exploitation, benthic habitat modification, and serial depletion of targeted stocks in the North Pacific. The ''Ecosystem Considerations'' chapter in the annual SAFE reports does not consider the effects of large-scale fisheries off Alaska on long-term restructuring of food web dynamics and on composition of species assemblages. An evaluation of this phenomenon, and consideration of alternatives to address it, is also missing from the EIS and the harvest specification process. Additionally, the proposed harvest specifications do not mitigate the effects of selective exploitation and disproportionate exploitation rates.

*Response:* NMFS takes a conservative approach to management in response to uncertainties. Conservative elements in the harvest strategies and groundfish fisheries management are listed in the responses to Comments 1, 2, 12, and 13. The EIS analyzed alternative harvest strategies that met the scope of this action, as determined by the statement of purpose and need.

The EIS analyzes the effects of the alternative harvest strategies on target stocks and habitat in a comprehensive way that looks at both the individual species impacts and the overall ecosystem function impacts. NMFS agrees that uncertainty exists in assessing the ecosystem effects of alternative harvest strategies. One of the functions of an EIS is to identify these uncertainties. The EIS and the Ecosystem Considerations chapter of the SAFE reports examine trends in the trophic level of catch and species diversity. As noted in the response to Comment 4, competitive interactions between fisheries are an active area of AFSC research, and are discussed, as appropriate, in the ecosystem discussions in the species-specific sections of the SAFE reports.

*Comment 6:* Neither the EIS nor its alternatives address the issues of setting exploitation levels on single stocks with no explicit consideration of the impacts of dependent, competing species in the food web or other impacts on associated species that flow from the exploitation of a relative few commercially desirable species.

*Response:* The EIS directly examines the impacts of the alternative harvest strategies on non-target species, including food web interactions. The EIS examines the impacts of groundfish fishing on forage fish availability in Chapter 6, and the trophic level of catches in Chapter 11. The EIS includes detailed analyses of the impacts on prey and habitat for key species and species groupings of marine mammals and seabirds in Chapters 8 and 9.

*Comment 7:* The uncertainties of ecosystem mechanics underscore the need for a much more precautionary approach to fisheries management in the context of food web and habitat conservation, and illustrate why the agency's determinations of non-significance for fishery impacts on prey availability and spatial/temporal concentration of fisheries are arbitrary and capricious. NMFS cannot demonstrate that the current and proposed levels of fishing permitted in protected species' habitats are ''safe'' or ''insignificant.'' Rather, NMFS assumes that the impact is insignificant in the absence of conclusive evidence to the contrary. The burden of proof is on the environment to show harm. This is opposite of precautionary and the opposite of an ecosystem-based approach.

*Response:* NMFS did not make a determination of non-significance in the EIS. The EIS fully discloses known impacts, areas of uncertainty, and presents the information in comparative form to aid in decision-making. NMFS agrees that uncertainty exists in assessing the ecosystem effects of alternative harvest strategies. Identifying these uncertainties is one of the functions of an EIS. The EIS identifies potential adverse impacts of the alternatives on the ecosystem and the uncertainty of those impacts. NMFS is actively taking steps to reduce uncertainty and better understand the environment through ongoing scientific research. Many elements built into the harvest specifications process, and into the groundfish fisheries management regime, described in the responses to Comments 1, 2, 12, and 13, contribute to conservative management.

*Comment 8:* Major habitat impacts of fishing on the Essential Fish Habitat (EFH) of FMP-managed species and foraging habitats of ESA and Marine Mammal Protection Act (MMPA)-protected species are not addressed in the EIS or mitigated in the proposed harvest specifications.

*Response:* NMFS has examined in the EIS the impacts of fishing on EFH of FMP-managed species, and on the foraging habitats of ESA- and MMPA-protected species. Chapter 8 examines the impacts of alternative groundfish harvest strategies on ESA- and MMPA-listed marine mammals. Chapter 9 provides a similar examination for ESA-listed seabirds. Chapter 10 examines the impacts of the harvest strategies on EFH and incorporates by reference the analysis in the Essential Fish Habitat Environmental Impact Statement (EFH EIS, see **ADDRESSES**) that examines the impact of fishing on benthic habitat.

Habitat impacts of fishing on the EFH of FMP-managed species and foraging habitats of ESA- and MMPA-protected species are mitigated by the extensive habitat protection measures enacted in the GOA. These are described in the response to Comment 11.

*Comment 9:* The EIS fails to evaluate the impacts of pelagic trawl gear on habitat and the impact of the spatial concentration of pollock and Pacific cod catches on stock size, in a meaningful fashion, and fails to consider an alternative to address these impacts. There is little scientific evidence that fishing on spawning stocks of Alaskan groundfish has had adverse impacts on recruitment success. The status quo practice of targeting groundfish on spawning grounds, when the fish are most vulnerable to fishing gear, is a habitat impact of particular significance that must be addressed. The dismal abundance trends of several regional pollock stocks and large uncertainties in stock structure among many groundfish

populations cry out for explicit protection of spawning grounds.

*Response:* The impacts of pelagic trawling on habitat are evaluated in the EFH EIS. Chapter 10 of the EIS provides an EFH Assessment that incorporates by reference the EFH EIS analysis of the impacts of the groundfish fisheries on EFH. Fisheries management measures, other than harvest strategies, are outside the scope of the action analyzed in the EIS. Pollock and Pacific cod catches are apportioned seasonally under existing measures adopted to protect Steller sea lions. Further seasonal apportionments of catch would require regulatory changes that were outside the scope of this action, as defined by the purpose and need.

*Comment 10:* The MSA's EFH provisions should require the adoption of marine reserves to protect vulnerable reproductive habitats that are targeted by the fisheries.

*Response:* This is not a comment on the content of the groundfish harvest specifications or on the accompanying EIS, and deals with issues that are beyond the scope of both.

*Comment 11:* NMFS' assertions that the status quo EFH measures provide adequate protection or that the spatial/temporal concentration of the fisheries has insignificant impacts on EFH are not supported by evidence. The EIS fails to evaluate this information and consider alternatives that would address these impacts on fish habitat, and the proposed harvest specifications provide no adequate mitigation measures to address these impacts. NMFS cannot demonstrate that the current and proposed levels of fishing permitted in managed species' habitats are insignificant or compliant with the spirit and letter of the MSA's EFH provisions. Rather, NMFS assumes that the impact is insignificant in the absence of conclusive evidence to the contrary. The burden of proof is on the environment and the managed species to show harm. This is opposite of a precautionary approach to EFH conservation.

*Response:* In this EIS NMFS fully discloses known impacts, identifies uncertainties, and presents information in comparative form to aid in decision-making. Detailed information on fishing on EFH contained in the 2005 EFH EIS was incorporated by reference in this EIS. As discussed in Chapter 2 of the EIS, fisheries management measures, other than harvest strategies, are outside the scope of this action, as defined by the statement of purpose and need.

The discussion of habitat impacts in the EIS incorporated by reference the science and analysis in the EFH EIS. The analyses in Section 4.3 and Appendix B of the EFH EIS indicated that groundfish fishing has long-term effects on benthic habitat features off Alaska and acknowledged that considerable scientific uncertainty remains regarding the consequences of such habitat changes for the sustained productivity of managed species. Nevertheless, the EFH EIS concluded that the effects on EFH are minimal because the analysis found no indication that continued fishing activities at the current rate and intensity would alter the capacity of EFH to support healthy populations of managed species over the long term. Therefore, the EFH EIS determined that new protection measures for the fisheries to reduce the adverse effects on EFH were not required. Nevertheless, the Council recommended a suite of new conservative measures to reduce potential adverse effects to EFH and Habitat Areas of Particular Concerns from the effects of fishing activities. These actions continue the Council's policy of implementing conservative conservation measures for the Alaska fisheries, as described in the management policies and objectives added to the groundfish FMPs from the PSEIS policy statement. NMFS implemented the Council's recommendations in 2006 (71 FR 36694; June 28, 2006).

The Council and NMFS have taken a conservative approach to habitat protection by enacting substantial restrictions on fishing that minimize potential adverse effects on EFH. Measures to protect Steller sea lions have fully or partially closed about 58,000 square nautical miles to fishing in the AI subarea and GOA. More recently, the Council and NMFS adopted a suite of new measures to reduce the effects of fishing on EFH in the AI subarea and GOA, protecting nearly 300,000 square nautical miles of habitat. Ten areas known as the GOA Slope Habitat Conservation Areas along the continental slope are closed to bottom trawling to protect hard bottom habitat that may be important to rockfish. Five GOA Coral Habitat Protection Areas in southeast Alaska are closed to all bottom contact fishing and anchoring to protect dense thickets of red tree corals. Another fifteen areas offshore, called the Alaska Seamount Habitat Protection Areas, are closed to all bottom contact fishing and anchoring to protect seamounts.

The Council and NMFS have taken many other measures to protect habitat. These include wide range of protection measures, including the Kodiak king crab protections zones, the Cook Inlet trawl closure area, scallop dredge closure areas, and the Southeast Alaska trawl closure. These actions reflect a conservative management strategy.

*Comment 12:* The lack of spatial-temporal management of groundfish stocks has potentially profound adverse consequences for ESA-listed Steller sea lions and MMPA-listed northern fur seals. The apportionment of ABCs according to broad management subareas does not address the impacts of fishing at local scales relevant to foraging sea lions, fur seals, and other species. NMFS fails to address localized effects adequately in any alternative considered in the EIS or the proposed harvest specifications. NMFS cannot demonstrate that the current and proposed levels of fishing permitted in protected marine mammal species' habitats are insignificant. Existing uncertainties underscore the need for a highly precautionary approach to habitat conservation, and illustrate why the agency's claims that spatial/temporal concentration of the fisheries under the status quo have insignificant impacts on marine mammal foraging habitats and prey are not supported by evidence. As in other instances, the burden of proof is on the environment to show harm. This is opposite of a precautionary approach.

*Response:* NMFS did not make a determination of non-significance in the EIS. The EIS fully discloses known impacts, areas of uncertainty, and presents the information in comparative form to aid in decision-making. The EIS describes localized impacts of fishing activity on marine mammals. Chapter 8 in the EIS evaluates the impacts of this action on marine mammals, with particular attention to impacts on Steller sea lions and northern fur seals. The chapter describes what is known about the spatial and temporal overlap between groundfish fishing activity and marine mammal foraging habitat. The EIS summarizes the available information on the impacts of fishing activity on marine mammals and their habitat. While information on the spatial and temporal impact of groundfish fishing on other species is relatively limited, the EIS provides a review of the information available and indicates where information is lacking.

Endangered Steller sea lions have been protected by a suite of measures. Groundfish fisheries conducted in accordance with the Steller sea lion protection measures adopted in 2002 have been determined not to jeopardize Steller sea lions or adversely modify their critical habitat. The protection measures involve seasonal apportionments of annual TACs, limits

on the proportion of catch within habitat important for Steller sea lion foraging, limits on fishing activity within areas adjacent to haulouts and rookeries, and closure of directed fishing when biomass falls to low levels. The protection measures and the conclusions of no jeopardy or adverse modification of habitat were arrived at after careful evaluation in 2001. Since that time, NMFS has continued to investigate the determinants of Steller sea lion declines. These measures are currently being reevaluated in a new biological opinion and revised recovery plan.

*Comment 13:* The proposed harvest specifications and the accompanying EIS fail in substantive ways to comply with the intent of the MSA, NEPA, the ESA, and the MMPA.

*Response:* Prior to approval, the Secretary ensures that this action and all actions it takes are in compliance with the MSA, NEPA, the ESA, and the MMPA.

*Comment 14:* Given the current uncertainties and lack of scientific information, it is essential to adopt a highly precautionary approach to exploitation of these ecosystems, in order to avoid the wholesale system reorganization and impoverishment that has been linked to fishing in other marine ecosystems.

*Response:* The Council recommended and NMFS approves the use of a cautionary approach.

*Comment 15:* There is no ''balance'' between the interests of fisheries and other public interests in the North Pacific region: the scales are tilted entirely to the advantage of the industrial fisheries whose interests are placed above all other public interests. The tradeoffs between often contrary FMP objectives are made by a decision-making body that is not representative of the broader public interest and that is biased heavily in favor of commercial utilization of the public resource for its own benefit. This state of affairs cries out for basic reforms of the kind outlined by the Pew Oceans Commission (2003) and the U.S. Oceans Policy Commission (2004) so that other public interests and societal goals are fairly represented, in order to achieve a real ''balance between competing uses'' of the ocean commons.

*Response:* This is not a comment on the content of the groundfish harvest specifications or on the accompanying EIS, and deals with issues that are beyond the scope of both.

*Comment 16:* All quotas should be cut in half this year and cut by 10 percent each year thereafter until we stop starving the marine life that depends on eating this fish too.

*Response:* The decisions on the amount of harvest are based on the best available science and socioeconomic considerations. NMFS finds that the ABCs and TACs are consistent with the biological condition of the groundfish stocks as described in the 2006 SAFE report and approved by the Council.

**Small Entity Compliance Guide**

The following information is a plain language guide to assist small entities in complying with this final rule as required by the Small Business Regulatory Enforcement Fairness Act of 1996. This final rule's primary management measures announce 2007 and 2008 final harvest specifications and prohibited species bycatch allowances for the groundfish fishery of the GOA. This action is necessary to establish harvest limits and associated management measures for groundfish during the 2007 and 2008 fishing years and to accomplish the goals and objectives of the FMP. This action affects all fishermen who participate in the GOA fishery. The specific amounts of OFL, ABC, TAC, and PSC are provided in tabular form to assist the reader. NMFS will announce closures of directed fishing in the **Federal Register** and in information bulletins released by the Alaska Region. Affected fishermen should keep themselves informed of such closures.

**Classification**

NMFS, determined that the FMP is necessary for the conservation and management of the GOA groundfish fishery and that it is consistent with the Magnuson-Stevens Fishery Conservation and Management Act and other applicable laws.

NMFS prepared a Draft EIS for this action and made it available to the public for comment (71 FR 53093, September 8, 2006). NMFS prepared the Final EIS and made it available to the public on January 12, 2007 (72 FR 1512). On February 13, 2007, NMFS issued the Record of Decision (ROD) for the Final EIS. Copies of the Final EIS and ROD for this action are available from NMFS (see **ADDRESSES**).

The Final Regulatory Flexibility Analysis (FRFA) was prepared to evaluate the impacts on small entities of alternative harvest strategies for the groundfish fisheries in the Exclusive Economic Zone (EEZ) off of Alaska. This FRFA meets the statutory requirements of the Regulatory Flexibility Act (RFA) of 1980, as amended by the Small Business Regulatory Enforcement Fairness Act (SBREFA) of 1996 (5 U.S.C. 601–612). A summary of the FRFA follows.

The action under consideration is adoption of a harvest strategy to govern the harvest of groundfish in the GOA Management Area. The preferred alternative is the status quo harvest strategy in which TACs fall within the range of ABCs recommended through the Council's harvest specification process and TACs recommended by the Council. This action is taken in accordance with the FMP and recommendations by the Council pursuant to the MSA.

The need for and objectives of this rule are described in the preamble and not repeated here.

Significant issues raised by public comment are addressed in the preamble and not repeated here.

The proposed harvest specifications were published in the **Federal Register** on December 15, 2006 (71 FR 75437). An Initial Regulatory Flexibility Analysis (IRFA) was prepared and was described in the classifications sections of that preamble. The public comment period ended on January 16, 2006. No comments were received regarding the economic impacts of this action.

The directly regulated small entities include approximately 747 small catcher vessels and less than 20 small catcher/processors. The entities directly regulated by this action are those that harvest groundfish in the EEZ of the GOA, and in parallel fisheries within State of Alaska waters. These include entities operating catcher vessels and catcher-processor vessels within the action area, and entities receiving direct allocations of groundfish. Catcher vessels and catcher processors were considered to be small entities if they had annual gross receipts, from all of their economic activities, and including the revenue of their affiliated operations, less than or equal to $4 million per year. Data from 2005 was used because it was the most recent available.

Estimates of first wholesale gross revenues for the GOA were used as indices of the potential impacts of the alternative harvest strategies on small entities. An index of revenues were projected to decline under the preferred alternative due to declines in ABCs for key species in the GOA. The index of revenues declined by less than four percent between 2006 and 2007 and by less than one percent between 2006 and 2008.

The preferred alternative (Alternative 2) was compared to four other alternatives. These included Alternative

1, which would set TACs so as to generate fishing rates equal to the maximum permissible ABC (if the full TAC were harvested), unless the sum of TACs would exceed the regional OY, in which case harvests would be limited to the OY. Alternative 3 would set TACs to produce fishing rates equal to the most recent five year average of fishing rates. Alternative 4 would set TACs to equal the lower bound of the regional OY range. Alternative 5 would set TACs equal to zero.

Alternatives 3, 4, and 5 were all associated with smaller levels for important fishery TACs than Alternative 2. Estimated total first wholesale gross revenues were used as an index of potential adverse impacts to small entities. As a consequence of the lower TAC levels, Alternatives 3, 4, and 5 all had smaller values of these first wholesale revenue indices than Alternative 2. Thus, Alternatives 3, 4, and 5 had greater adverse impacts on small entities. Alternative 1 appeared to generate higher values of the gross revenue index for fishing operations in the GOA than Alternative 2. A large part of the larger Alternative 1 GOA revenue appears to be due to the assumption that the full Alternative 1 TAC would be harvested. Much of the larger revenue is due to increases in flatfish TACs that were much larger for Alternative 1 than for Alternative 2. In recent years, halibut bycatch constraints in these fisheries have kept actual flatfish catches from reaching the Alternative 1 levels. Therefore, a large part of the revenues associated with Alternative 1 are unlikely to occur. Also, Alternative 2 TACs are constrained by the ABCs the Plan Team and SSC recommend to the Council on the basis of a full consideration of biological issues. These ABCs are often less than Alternative 1 maximum permissible ABCs. Therefore higher TACs under Alternative 1 may not be consistent with prudent biological management of the resource. For these reasons, Alternative 2 is the preferred alternative.

This action does not modify recordkeeping or reporting requirements, or duplicate, overlap, or conflict with any Federal rules.

This action is authorized under § 679.20 and is exempt from review under Executive Order 12866.

Adverse impacts on marine mammals resulting from fishing activities conducted under this rule are discussed in the EIS (see **ADDRESSES**).

Under 5 U.S. C. 553(d)(3), an agency can waive the 30 day delay in effectiveness of a rule for good cause. These final harvest specifications were developed as quickly as possible, given Plan Team review in November 2006, Council consideration and recommendations in December 2006, and NOAA Fisheries review and development in January-February 2007. For all fisheries not currently closed because the TACs established under the 2006 and 2007 final harvest specifications (71 FR 10870, March 3, 2006) were reached, the likely possibility exists for their closures prior to the expiration of a 30 day delayed effectiveness period because their TACs could be reached. Certain fisheries, such as those for pollock and Pacific cod intensive fast paced fisheries. Other fisheries, such as those for flatfish, rockfish and ''other species,'' are critical as directed fisheries and as incidental catch in other fisheries. U.S. fishing vessels have demonstrated the capacity to catch the TAC allocations in all these fisheries. Any delay in allocating the final TAC in these fisheries would cause disruption to the industry and potential economic harm through unnecessary discards. Determining which fisheries may close is impossible because these fisheries are affected by several factors that cannot be predicted in advance, including fishing effort, weather, movement of fishery stocks, and market price. Furthermore, the closure of one fishery has a cascading effect on other fisheries by freeing up fishing vessels, allowing them to move from closed fisheries to open ones, increasing the fishing capacity in those open fisheries and causing them to close at an accelerated pace.

If the final harvest specifications are not effective by March 10, 2007, which is the start of the Pacific halibut season as specified by the IPHC, the hook-and-line sablefish fishery will not begin concurrently with the Pacific halibut season. This would cause a conservation issue as sablefish that is caught with Pacific halibut would have to be discarded, as both hook-and-line sablefish and Pacific halibut are managed under the same IFQ program. Immediate effectiveness of the 2007 and 2008 final harvest specifications will allow the sablefish fishery to begin concurrently with the Pacific halibut season, thus preventing needless discards. Also, the immediate effectiveness of this action is required to provide consistent management and conservation of fishery resources based on the best available scientific information, and to give the fishing industry the earliest possible opportunity to plan its fishing operations. These final harvest specifications were developed as quickly as possible, given Plan Team review in November 2006, Council consideration and recommendations in December 2006, and NOAA fisheries review and development in January and February 2007.

Furthermore, the current allocation for GOA Pacific cod under the authority of the 2006 and 2007 final harvest specifications (71 FR 10870, March 3, 2006) is lower (37,545 mt) than the allocation under the 2007 and 2008 final harvest specifications (52,264 mt), which is based on the best scientific information available. Unless this delay is waived and the 2007 and 2008 final harvest specifications become effective upon publication, the A season Pacific cod fisheries will close earlier than necessary. The GOA Pacific cod fishery is the second largest fishery in the GOA after pollock and all gear types are used to fish in the Pacific cod fisheries. Closures of the Pacific cod fisheries are restrictions on the industry that can be relieved by making the 2007 and 2008 final harvest specifications effective on publication. Premature closures disrupt fisheries and increase the potential for regulatory discards. The 2007 and 2008 final harvest specifications establish increased Pacific cod TACs to provide continued directed fishing for this species that would otherwise be prohibited under the 2006 and 2007 harvest specifications. Accordingly, NMFS finds that there is good cause to waive the 30 day delayed effectiveness period under 5 U.S.C. 553(d)(3).

**Authority:** 16 U.S.C. 773 *et seq.*; 1540(f); 1801 *et seq.*; 1851 note; and 3631 *et seq.*

Dated: February 22, 2007.

**Samuel D. Rauch III,**

*Deputy Assistant Administrator for RegulatoryPrograms, National Marine Fisheries Service.*

[FR Doc. E7–3775 Filed 3–2–07; 8:45 am]

BILLING CODE 3510–22–S

# Proposed Rules

Federal Register
Vol. 72, No. 42
Monday, March 5, 2007

This section of the FEDERAL REGISTER contains notices to the public of the proposed issuance of rules and regulations. The purpose of these notices is to give interested persons an opportunity to participate in the rule making prior to the adoption of the final rules.

## NUCLEAR REGULATORY COMMISSION

### 10 CFR Part 50

**[Docket No. PRM–50–81]**

### Mr. Eric Epstein; Denial of Petition for Rulemaking

**AGENCY:** Nuclear Regulatory Commission (NRC).

**ACTION:** Denial of petition for rulemaking.

**SUMMARY:** The NRC is denying a petition for rulemaking (PRM) submitted by Mr. Eric Epstein on October 19, 2005. The petition, docketed as PRM–50–81, requests that NRC codify criteria in the Federal Emergency Management Agency (FEMA) [1] 1986 Guidance Memorandum (GM) EV–2, ''Protective Actions for School Children,'' into NRC's emergency planning regulations. The petitioner believes that this action is necessary to provide preplanned emergency evacuation capabilities for children in Pennsylvania. The NRC is denying PRM–50–81 because it does not provide significant new information that was not previously considered in denying an earlier petition, PRM–50–79, submitted by Mr. Lawrence T. Christian, which requested that the Commission amend its emergency planning regulations to ensure that all day care centers and nursery schools in the vicinity of nuclear power facilities are properly protected in the event of a radiological emergency.

**ADDRESSES:** Publicly available documents related to this petition, including the petition for rulemaking and the NRC's letter of denial to the petitioner may be viewed electronically on public computers in the NRC's Public Document Room (PDR), 01 F21, One White Flint North, 11555 Rockville Pike, Rockville, Maryland. The PDR reproduction contractor will copy documents for a fee. Selected documents, including comments, may be viewed and downloaded electronically via the NRC rulemaking Web site at *http://ruleforum.llnl.gov.* Publicly available documents created or received at the NRC after November 1, 1999, are also available electronically at the NRC's Electronic Reading Room at *http://www.nrc.gov/reading-rm/adams.html.* From this site, the public can gain entry into the NRC's Agencywide Document Access and Management System (ADAMS), which provides text and image files of NRC's public documents. If you do not have access to ADAMS or if there are problems in accessing the documents located in ADAMS, contact the PDR reference staff at (800) 387–4209, (301) 415–4737 or by e-mail to *pdr@nrc.gov.*

**FOR FURTHER INFORMATION CONTACT:** Lee Banic, Office of Nuclear Reactor Regulation, NRC, Washington, DC 20555–0001, telephone (301) 415–2771, e-mail *mjb@nrc.gov.*

**SUPPLEMENTARY INFORMATION:**

## The Petition

On March 27, 2006, the NRC docketed a petition for rulemaking submitted under 10 CFR 2.802 by Mr. Eric Epstein on October 19, 2005. The petitioner requested that NRC amend its regulations to codify criteria in the FEMA 1986 GM EV–2 into NRC's emergency planning regulations (10 CFR part 50). The petitioner believes that this action is necessary to provide preplanned emergency evacuation capabilities for children in Pennsylvania. In support of his petition, Mr. Epstein cited excerpts from an enclosure to his petition, an unsigned, undated document that he represents as a differing professional opinion (DPO) submitted by a member of the NRC staff.[2] This DPO focused on the adequacy of preplanned evacuation resources and preplanned relocation centers for day care centers and nursery schools within the Commonwealth of Pennsylvania (''Commonwealth'') and on whether the Commonwealth and Department of Homeland Security (DHS)/FEMA have failed to comply with DHS/FEMA guidance.

*Summary of Original Petition PRM–50–79 and Basis for Denial*

On September 4, 2002, NRC received a petition for rulemaking submitted by Mr. Lawrence T. Christian and 3,000 co-signers. The petition was docketed on September 23, 2002, and assigned Docket No. PRM–50–79. The petition requested that NRC amend its regulations regarding offsite State and local government emergency plans for nuclear power plants to ensure that all day care centers and nursery schools in the vicinity of nuclear power facilities are properly protected during a radiological emergency.

The Commission denied the petition in a document published in the **Federal Register** on December 19, 2005 (70 FR 75085). The petition was denied on the basis that current NRC requirements and NRC and DHS guidance reasonably assure adequate protection of all members of the public, including children attending day care centers and nursery schools, in the event of a nuclear power plant incident. NRC stated in its denial that many of the specific requests of petition PRM–50–79 either are already covered by regulations or guidance documents (including GM EV–2) or are inappropriate for inclusion in NRC regulations owing to their very prescriptive nature.

The Commission also determined that the petition and information obtained during the review of the petition, raised questions about local implementation of relevant requirements and guidelines. Accordingly, the Commission directed the NRC staff to undertake several actions to further assess these implementation questions and to provide appropriate recommendations for improvement (staff requirements memorandum (SRM) dated October 26, 2005, available in the Agencywide Document Access and Management System (ADAMS) No. ML052990321). In response to this direction, the NRC staff met with DHS and the Pennsylvania Emergency Management Agency to

[1] Now part of the Department of Homeland Security (DHS).

[2] The Commission acknowledges that such a DPO was submitted. This DPO was processed in accordance with NRC procedures included in Management Directive 10.159, ''The NRC Differing Professional Opinions Program.'' On June 14, 2006, the Director, Office of Nuclear Security and Incident Response (NSIR), issued a decision that concluded that DHS has arrived at a defensible finding of reasonable assurance that children at day care facilities and nursery schools would be evacuated in the event of a radiological emergency at a power plant in the Commonwealth. The NSIR Director also concluded that the DHS finding is consistent with the relevant regulations and guidance documents as well as legal implementation of Federal, State, and local requirements. A summary of the DPO decision is available on the NRC public Web site *http://www.nrc.gov.*

obtain information relevant to local implementation. Pennsylvania officials described a comprehensive program, mandated by Pennsylvania law, for licensed day care facilities that substantially enhances the existing emergency preparedness posture that was previously found by DHS to provide reasonable assurance that adequate protective measures will be taken for the public, including children in day care facilities.

The NRC staff provided the Commission the results of this assessment and other related initiatives in a Commission paper dated May 4, 2006 (SECY–06–0101; ML060760586). The staff found no sufficient basis to question the adequacy of DHS findings regarding reasonable assurance. The staff believes the DHS findings are consistent with the planning standards of 10 CFR 50.47(b) and the existing memorandum of understanding between NRC and DHS. The staff also included a recommendation to republish the December 19, 2005, **Federal Register** Notice with revisions to correct factual errors and clarify NRC's regulatory positions and bases in the petition denial. This recommendation afforded the Commission an opportunity to reconsider its earlier denial of the petition. The Commission found no basis for changing its earlier denial, and in an SRM dated June 21, 2006 (ML061720324), the Commission directed the staff to publish the amended **Federal Register** Notice. The amended notice was published on August 7, 2006 (71 FR 44593).

**Reasons for Denial**

The Commission is denying the petition for the following reasons. The petition does not provide significant new information or arguments that were not previously considered by the Commission in denying PRM–50–79. As stated above, the petition relies upon a DPO, which focused on the adequacy of preplanned evacuation resources and preplanned relocation centers for day care centers and nursery schools within the Commonwealth, and on whether the Commonwealth and DHS/FEMA complied with DHS/FEMA guidance. The proposed remedy of the petitioner is for the NRC to grant the petition for rulemaking (PRM–50–79), commence a rulemaking to incorporate the criteria in GM EV–2 into the NRC's emergency planning regulations, and to implement the 120-day clock provisions of 10 CFR 50.54(s)(2) while the rulemaking is in progress. However, the nature of the issues raised in the DPO would not provide a basis for the petitioner's remedy. The DPO raised issues about local implementation of the requirements and guidance, and DHS/FEMA evaluation of local implementation, neither of which could be resolved by the petitioner's proposal that the GM EV–2 criteria be incorporated into NRC regulations.[3] GM EV–2 is a guidance document developed by FEMA and utilized by the DHS, which has primary responsibility for assessing the adequacy of offsite emergency preparedness[4]. NRC bases its own findings in part on a review of DHS's findings and determinations as to whether State and local emergency plans are adequate and whether there is reasonable assurance that they can be implemented.

Dated at Rockville, Maryland, this 26th day of February 2007.

For the Nuclear Regulatory Commission.

**Annette L. Vietti-Cook,**

*Secretary of the Commission.*

[FR Doc. E7–3822 Filed 3–2–07; 8:45 am]

BILLING CODE 7590–01–P

[3] The Commission has, in the October 26, 2005 SRM on SECY–05–0045, directed the staff to develop guidance and expectations for the NRC review of FEMA's assessment and findings of offsite emergency preparedness. This activity should address the petitioner's and the DPO's issues with respect to the adequacy of FEMA/DHS evaluation of local implementation of offsite emergency preparedness.

[4] The Security and Accountability for Every Port Act of 2006, Public Law 109–347, provides that the DHS radiological emergency preparedness program will be transferred back to FEMA as of April 1, 2007.

## SOCIAL SECURITY ADMINISTRATION

### 20 CFR Parts 404 and 416

**[Docket No. SSA–2006–0096]**

**RIN 0960–AG40**

## Methods for Conducting Personal Conferences When Waiver of Recovery of a Title II or Title XVI Overpayment Cannot Be Approved

**AGENCY:** Social Security Administration.

**ACTION:** Proposed rules.

**SUMMARY:** We propose to revise our title II regulations and add title XVI regulations on personal conferences when waiver of recovery of an overpayment cannot be approved. These proposed rules would allow for the conferences to be conducted face-to-face, by telephone, or by video teleconference in these circumstances.

**DATES:** To be sure that we consider your comments, we must receive them by May 4, 2007.

**ADDRESSES:** You may give us your comments: by Internet through the Federal eRulemaking Portal at *http://www.regulations.gov;* by e-mail to *regulations@ssa.gov;* by telefax to (410) 966–2830; or by letter to the Commissioner of Social Security, P.O. Box 17703, Baltimore, Maryland 21235–7703. You may also deliver them to the Office of Regulations, Social Security Administration, 107 Altmeyer Building, 6401 Security Boulevard, Baltimore, Maryland 21235–6401, between 8 a.m. and 4:30 p.m. on regular business days. Comments are posted on the Federal eRulemaking Portal. You may also inspect the comments on regular business days by making arrangements with the contact person shown in this preamble.

**FOR FURTHER INFORMATION CONTACT:** Robin Strauss, Social Insurance Specialist, Office of Income Security Programs, Social Security Administration, 252 Altmeyer Building, 6401 Security Boulevard, Baltimore, MD 21235–6401, (410) 965–7944 or TTY (410) 966–5609, for information about this notice. For information on eligibility or filing for benefits, call our national toll-free number, 1–800–772–1213 or TTY 1–800–325–0778, or visit our Internet site, Social Security Online, at *http://www.socialsecurity.gov.*

**SUPPLEMENTARY INFORMATION:**

**Electronic Version**

The electronic file of this document is available on the date of publication in the **Federal Register** at *http://www.gpoaccess.gov/fr/index.html.*

**Background**

Our existing regulations at § 404.506 state that we will waive recovery of an overpayment if the individual was without fault in causing the overpayment and if recovery would defeat the purpose of the Social Security Act or be against equity and good conscience. Section 404.506 further states that, if we cannot approve waiver after reviewing the information the individual has given to support his or her contention that the recovery of the overpayment should be waived, we will offer the individual a personal conference. The personal conference policy was established so that the decisionmaker would have the opportunity to assess an individual's contention through personal, versus written, contact. Our existing regulations at § 416.550 state that we will waive recovery of an overpayment if the individual was without fault in causing the overpayment and if recovery would either defeat the purpose of title XVI, or be against equity and good conscience, or impede the efficient

administration of title XVI. There is currently no title XVI regulation regarding personal conferences.

Section 404.506(e)(1) states that the individual is given the opportunity to ''appear personally'' at the personal conference. Current regulations do not further specify the method in which this appearance may be made. Our longstanding policy contained in Social Security Ruling (SSR) 94–4p which implemented the decisions in *Buffington, et. al.* v. *Schweiker* and *Califano* v. *Yamasaki,* provides that a face-to-face pre-recoupment hearing will be conducted prior to the denial of waiver of recovery of an overpayment. However, a face-to-face appearance at the field office is not always convenient for the beneficiary. Often, if an individual is not able to come to the face-to-face conference, field office personnel will go to the person to hold the conference. Offering additional appearance options for the conference would improve service to the beneficiaries and reduce costly home visits by field personnel.

In order to fulfill our stewardship responsibilities to the Social Security trust fund, we must employ methods that will simplify our personal conference procedures and use our resources most efficiently. We should be using all available technology when we conduct personal conferences. Therefore, we propose to revise the regulations to allow for personal conferences to be conducted face-to-face at a place we designate (usually in the field office), by telephone, or by video teleconference. We will give the choice to the individual; the individual will still be provided the opportunity to appear face-to-face by choosing to come to us for the personal conference, or may choose to participate by telephone or video teleconference. If the individual elects to conduct the personal conference by video teleconference, the individual will designate the location for his or her end of the video teleconference. We will designate the location for our end of the video teleconference, if video teleconferencing is feasible, e.g., the field office has reasonable access to video teleconferencing. Because we are offering claimants two new and convenient ways to participate in a personal conference—in addition to the face-to-face conferences at our field offices we currently offer—we believe the need for our personnel to make costly home visits will significantly decrease. Therefore, we will consider conducting face-to-face conferences at locations other than SSA field offices only on a case-by-case basis, and only in those limited circumstances where: (a) A claimant has exhausted all other means of obtaining a personal conference, and (b) conducting a personal conference by any other means would be so inadequate, owing to a claimant's physical or mental condition, as to infringe upon the person's right to a hearing. An example of such a circumstance would be a claimant who is bedridden and deaf, and therefore, will have considerable difficulty traveling to a field office and participating in a conference by phone.

These proposed rules will not affect the individual's right to review the claims file, have a representative present for the proceedings, cross-examine witnesses, or submit documentary evidence. Those provisions will not change. For example, claimants who choose to conduct the personal conference via telephone or video teleconference will be given an opportunity to submit documentary evidence by mail or fax prior to the scheduled conference. If necessary, the conference could be rescheduled to allow claimants time to do this. In conducting the personal conference face-to-face at a place we designate, or by telephone, or by video teleconference, we will be fulfilling our stewardship responsibilities while offering an additional convenience to the individual and continuing to protect the individual's right to present his or her contention that he or she meets the requirements for waiver of recovery of an overpayment. The decisionmaker will still be able to properly assess the person's contentions regarding fault under these new procedures.

We already successfully conduct some hearings by telephone and by video teleconference. For example, the administrative review of an initial determination for Medicare Part D subsidies is conducted either by a telephone hearing or a case review. See § 418.3625. Additionally, some administrative hearings to review claims under title II (including administrative law judge review of denial of waiver based on a personal conference), and other claims under title XVI are now conducted via video teleconferencing. See §§ 404.936 and 416.1436. Our experience in these contexts has demonstrated that these procedures adequately protect a claimant's due process rights.

## Explanation of Proposed Changes

We propose to change the regulations in 20 CFR parts 404 and 416 to reflect the methods for conducting personal conferences when waiver of recovery of an overpayment cannot be approved as follows:

- We propose to change the regulations at § 404.506 to reflect the various methods we can use to conduct the personal conference. These methods are: face-to-face in a location we designate (usually in the field office), via telephone, or via video teleconference.
- Currently, part 416 has no reference to personal conferences when waiver of recovery of the overpayment cannot be approved. We are proposing to add a new section that is similar to the regulations at § 404.506. New § 416.557 would include the various methods we can use to conduct the personal conference and describe the individual's rights and responsibilities regarding the personal conference.

Since SSR 94–4p only provides for a pre-recoupment hearing that is conducted face-to-face before waiver of recovery of an overpayment can be denied, the proposed changes in §§ 404.506 and 416.557 would expand that policy. Therefore, if we proceed to publish final rules, we will also publish a notice rescinding SSR 94–4p concurrently with the effective date of the final rules.

## Clarity of These Proposed Rules

Executive Order 12866, as amended by Executive Order 13258, requires each agency to write all rules in plain language. In addition to your substantive comments on these proposed rules, we invite your comments on how to make these proposed rules easier to understand. For example:

- Have we organized the material to suit your needs?
- Are the requirements in the rules clearly stated?
- Do the rules contain technical language or jargon that is not clear?
- Would a different format (grouping and order of sections, use of headings, paragraphing) make the rules easier to understand?
- Would more (but shorter) sections be better?
- Could we improve clarity by adding tables, lists, or diagrams?
- What else could we do to make the rules easier to understand?

## Regulatory Procedures

### *Executive Order 12866*

We have consulted with the Office of Management and Budget (OMB) and determined that these proposed rules meet the criteria for a significant regulatory action under Executive Order 12866, as amended by Executive Order

13258. Thus, they were reviewed by OMB.

*Regulatory Flexibility Act*

We certify that these proposed rules would not have a significant economic impact on a substantial number of small entities because they affect only individuals. Thus, a regulatory flexibility analysis as provided in the Regulatory Flexibility Act, as amended, is not required.

*Paperwork Reduction Act*

We are proposing to revise our rules on conducting personal conferences when waiver of recovery of a title II or title XVI overpayment cannot be approved. These proposed revisions would allow for the conferences to be conducted face-to-face, by telephone, or by video teleconference. Currently, we only conduct these conferences face-to-face. Although these proposed rules only contain information collection burdens in §§ 416.557(c)(3) and 416.557(d)(8), we are also including the associated information collection burdens for §§ 404.506(e)(3) and 404.506(f)(8) since those sections deal with personal conferences. As outlined in the table below, in §§ 404.506(e)(3), 404.506(f)(8), 416.557(c)(3) and 416.557(d)(8), respondents may provide additional evidence for consideration at the personal conference. The collection of evidence is a public paperwork burden that requires clearance under the Paperwork Reduction Act of 1995. Respondents to these collections are individual and the individual's representative that request a waiver conference of their overpayment and submit additional evidence.

| Title/section & collection description | Annual number of respondents | Frequency of response | Average burden per response (minutes) | Estimated annual burden (hours) |
|---|---|---|---|---|
| Personal Conference 404.506(e)(3) Submittal of additional documents for consideration at personal conferences | 150,000 | 1 | 30 | 75,000 |
| Personal Conference 404.506(f)(8) Submittal of additional mitigating financial information and verifications for consideration at personal conferences | 75,000 | 1 | 30 | 37,500 |
| Personal Conference 416.557(c)(3) Submittal of additional documents for consideration at personal conferences | 100,000 | 1 | 30 | 50,000 |
| Personal Conference 416.557(d)(8) Submittal of additional mitigating financial information and verifications for consideration at personal conferences | 50,000 | 1 | 30 | 25,000 |
| Total | 375,000 | ..... | ..... | 187,500 |

An Information Collection Request has been submitted to OMB for clearance. We are soliciting comments on the burden estimate; the need for the information; its practical utility; ways to enhance its quality, utility and clarity; and on ways to minimize the burden on respondents, including the use of automated collection techniques or other forms of information technology. Comments should be sent to OMB by fax or by e-mail to: Office of Management and Budget, Attn: Desk Officer for SSA, Fax Number: 202–395–6974, E-mail address: *OIRA_Submission@omb.eop.gov.*

Comments on the paperwork burdens associated with this rule can be received for up to 60 days after publication of this notice and will be most useful if received within 30 days of publication. This does not affect the deadline for the public to comment to SSA on the proposed regulations. These information collection requirements will not become effective until approved by OMB. When OMB has approved these information collection requirements, SSA will publish a notice in the **Federal Register**.

To receive a copy of the OMB clearance package, your staff may call the SSA Reports Clearance Officer on 410–965–0454.

(Catalog of Federal Domestic Assistance Program Nos. 96.001, Social Security-Disability Insurance; 96.002, Social Security-Retirement Insurance; 96.004, Social Security-Survivors Insurance; and 96.006, Supplemental Security Income)

**List of Subjects**

*20 CFR Part 404*

Administrative practice and procedure, Blind, Disability benefits, Old-Age, Survivors and Disability Insurance; Reporting and recordkeeping requirements, Social Security.

*20 CFR Part 416*

Administrative practice and procedure, Aged, Blind, Disability benefits, Public assistance programs; Reporting and recordkeeping requirements, Supplemental security income (SSI).

Dated: November 27, 2006.

**Jo Anne B. Barnhart,**

*Commissioner of Social Security.*

For the reasons set out in the preamble, we propose to amend subpart F of part 404 and subpart E of part 416 of chapter III of title 20 of the Code of Federal Regulations as follows:

## PART 404—FEDERAL OLD-AGE, SURVIVORS AND DISABILITY INSURANCE (1950— )

### Subpart F—[Amended]

1. The authority citation for subpart F of part 404 continues to read as follows:

**Authority:** Secs. 204, 205(a), 702(a)(5), and 1147 of the Social Security Act (42 U.S.C. 404, 405(a), 902(a)(5), and 1320b–17); 31 U.S.C. 3720A.

2. Section 404.506 is amended by adding a sentence at the end of paragraph (c) to read as follows:

**§ 404.506 When waiver may be applied and how to process the request.**

* * * * *

(c) * * * We will offer to the individual the option of conducting the personal conference face-to-face at a place we designate, by telephone, or by video teleconference. The notice will advise the individual of the date and time of the personal conference.

* * * * *

## PART 416–SUPPLEMENTAL SECURITY INCOME FOR THE AGED, BLIND, AND DISABLED

### Subpart E—[Amended]

1. The authority citation for subpart E of part 416 continues to read as follows:

**Authority:** Secs. 702(a)(5), 1147, 1601, 1602, 1611(c) and (e), and 1631(a)–(d) and (g) of the Social Security Act (42 U.S.C. 902(a)(5), 1320b–17, 1381, 1381a, 1382(c) and (e), and 1383(a)–(d) and (g)); 31 U.S.C. 3720A.

2. Section 416.557 is added to read as follows:

**§ 416.557 Personal conference.**

(a) If waiver cannot be approved (i.e., the requirements in § 416.550 (a) and (b) are not met), the individual is notified in writing and given the dates, times and place of the file review and personal conference; the procedure for reviewing the claims file prior to the personal conference; the procedure for seeking a change in the scheduled dates, times and/or place; and all other information necessary to fully inform the individual about the personal conference. The file review is always scheduled at least 5 days before the personal conference. We will offer to the individual the option of conducting the personal conference face-to-face at a place we designate, by telephone, or by video teleconference. The notice will advise the individual of the date and time of the personal conference.

(b) At the file review, the individual and the individual's representative have the right to review the claims file and applicable law and regulations with the decisionmaker or another of our representatives who is prepared to answer questions. We will provide copies of material related to the overpayment and/or waiver from the claims file or pertinent sections of the law or regulations that are requested by the individual or the individual's representative.

(c) At the personal conference, the individual is given the opportunity to:

(1) Appear personally, testify, cross-examine any witnesses, and make arguments;

(2) Be represented by an attorney or other representative (see § 416.1500), although the individual must be present at the conference; and

(3) Submit documents for consideration by the decisionmaker.

(d) At the personal conference, the decisionmaker:

(1) Tells the individual that the decisionmaker was not previously involved in the issue under review, that the waiver decision is solely the decisionmaker's, and that the waiver decision is based only on the evidence or information presented or reviewed at the conference;

(2) Ascertains the role and identity of everyone present;

(3) Indicates whether or not the individual reviewed the claims file;

(4) Explains the provisions of law and regulations applicable to the issue;

(5) Briefly summarizes the evidence already in file which will be considered;

(6) Ascertains from the individual whether the information presented is correct and whether he/she fully understands it;

(7) Allows the individual and the individual's representative, if any, to present the individual's case;

(8) Secures updated financial information and verification, if necessary;

(9) Allows each witness to present information and allows the individual and the individual's representative to question each witness;

(10) Ascertains whether there is any further evidence to be presented;

(11) Reminds the individual of any evidence promised by the individual which has not been presented;

(12) Lets the individual and the individual's representative, if any, present any proposed summary or closing statement;

(13) Explains that a decision will be made and the individual will be notified in writing; and

(14) Explains repayment options and further appeal rights in the event the decision is adverse to the individual.

(e) SSA issues a written decision to the individual (and his or her representative, if any) specifying the finding of fact and conclusions in support of the decision to approve or deny waiver and advising of the individual's right to appeal the decision. If waiver is denied, adjustment or recovery of the overpayment begins even if the individual appeals.

(f) If it appears that the waiver cannot be approved, and the individual declines a personal conference or fails to appear for a second scheduled personal conference, a decision regarding the waiver will be made based on the written evidence of record. Reconsideration is then the next step in the appeals process.

[FR Doc. E7–3782 Filed 3–2–07; 8:45 am]

BILLING CODE 4191–02–P

---

## DEPARTMENT OF THE TREASURY

### Internal Revenue Service

### 26 CFR Part 301

**[REG–100841–97]**

**RIN 1545–AU97**

## Agreements for Payment of Tax Liabilities in Installments

**AGENCY:** Internal Revenue Service (IRS), Treasury.

**ACTION:** Withdrawal of notice of proposed rulemaking and notice of proposed rulemaking.

**SUMMARY:** This document withdraws the notice of proposed rulemaking published in the **Federal Register** on December 31, 1997 (62 FR 68241) and contains proposed regulations relating to the payment of tax liabilities in installments. The proposed regulations reflect changes to the law made by the Taxpayer Bill of Rights II, the Internal Revenue Service Restructuring and Reform Act of 1998, and the American Jobs Creation Act of 2004.

**DATES:** Written or electronic comments and requests for a public hearing must be received by June 4, 2007.

**ADDRESSES:** Send submissions to: CC:PA:LPD:PR (REG–100841–97), room 5203, Internal Revenue Service, POB 7604, Ben Franklin Station, Washington, DC 20044. Submissions may be hand delivered Monday through Friday between the hours of 8 a.m. and 4 p.m. to: CC:PA:LPD:PR (REG–100841–97), Courier's Desk, Internal Revenue Service, 1111 Constitution Avenue, NW., Washington, DC. Alternatively, taxpayers may submit comments electronically directly to the IRS Internet site at *http://www.irs.gov/regs* or via the Federal eRulemaking Portal at *http://www.regulations.gov* (indicate IRS and REG–100841–97).

**FOR FURTHER INFORMATION CONTACT:** Concerning the regulations, G. William Beard, (202) 622–3620; concerning submissions of comments or requests for a hearing, Kelly Banks, (202) 622–7180 (not toll-free numbers).

**SUPPLEMENTARY INFORMATION:**

### Background

On December 31, 1997, a notice of proposed rulemaking (REG–100841–97; 62 FR 68241) reflecting changes made to section 6159 of the Internal Revenue Code (Code) by section 202 of the Taxpayer Bill of Rights II, Pub. L. 104–168 (110 Stat. 1452, 1457) was published in the **Federal Register**. That proposed rule was not acted upon prior to the enactment of the Internal Revenue Service Restructuring and Reform Act of 1998 (RRA 1998), Pub. L. 105–206, section 3462 (112 Stat. 685, 764), which made further amendments to section 6159. Section 843 of the American Jobs Creation Act of 2004 (AJCA), Pub. L. 108–357 (118 Stat. 1418, 1600), also made changes to section 6159. This document amends the prior notice of proposed rulemaking. It contains proposed amendments to the Procedure and Administration Regulations (26 CFR part 301) under section 6159 reflecting

the amendment of the Code by RRA 1998, the Taxpayer Bill of Rights II, and the AJCA.

**Installment Agreements Under Section 6159**

Consistent with its mission of applying the tax laws with integrity and fairness to all, the IRS generally expects that all taxpayers will pay the total amount due, regardless of amount, at the time the Code requires that the tax be paid. See Policy Statement P–5–2, Collecting Principles (Approved February 17, 2000), reprinted at IRM 1.2.1.5.2. When attempting to resolve a tax delinquency, the IRS will work with taxpayers to achieve full payment of all tax, penalties, and interest. Where payment in full cannot immediately be achieved, the IRS may allow taxpayers to pay over time through installment agreements.

**Explanation of Provisions**

The proposed regulations allow the IRS to enter into agreements for the full or partial payment of any unpaid tax in installments. The regulations provide rules for the submission of proposed installment agreements, the processing, acceptance, and rejection of such agreements by the IRS, the termination or modification of existing agreements, and the appeal of rejections, modifications, and terminations to the IRS Office of Appeals (Appeals). The majority of these provisions are unchanged from what was contained in the prior regulations or reflect longstanding IRS administrative practice. The rules regarding when a proposed installment agreement becomes pending, restrictions on collection activity while an agreement is pending or in effect, and the suspension of the statute of limitations for collection are nearly identical to the provisions in existing § 301.6331–4. The only change was a clarification that the IRS will not be precluded from filing suit or a proof of claim in bankruptcy for the full amount of the liabilities owed, regardless of whether the installment agreement provides for full or partial payment of the liabilities at issue.

Taxpayers may request administrative review of IRS decisions to modify or terminate installment agreements pursuant to section 6159(e), added to the Code by section 202 of the Taxpayer Bill of Rights II. Taxpayers may appeal rejections of proposed installment agreements under section 7122(d), added to the Code by section 3462 of RRA 1998. The proposed regulations allow taxpayers to appeal a termination, modification, or rejection of an installment agreement to Appeals provided they request the appeal in the manner specified by the IRS.

The previous notice of proposed rulemaking contained a more detailed procedure for seeking review of decisions to terminate or modify agreements. That proposed regulation has not been adopted. These regulations contain a less detailed procedure because procedures for appealing differ depending on the IRS operating division handling the case, the size of the tax liability, or the type of tax at issue. For example, some taxpayers may be able to request an appeal by telephone while others will be required to submit a formal written request. See Publication 1660, Collection Appeal Rights.

The proposed regulations incorporate the provisions of section 6159(c), added to the Code by section 3467 of RRA 1998. That section requires the IRS to accept a proposed installment agreement for income taxes under certain circumstances. The regulations also incorporate section 3506 of RRA 1998, which requires the IRS to send each taxpayer with an installment agreement an annual statement showing the balance due at the beginning of the year, the payments made during the year, and the remaining balance due at the end of the year.

Section 843 of the AJCA amended section 6159(a) to allow the IRS to enter into installment agreements that provide for partial (as well as full) payment of a tax liability. The proposed regulations incorporate this change. Because a partial payment installment agreement could be confused with a compromise of the liability, the proposed regulations clarify that an installment agreement does not reduce the amount of taxes, interest, or penalties owed. *See* H. Rep. No. 108–755, 108th Cong., 2d Sess., 2005 U.S.C.C.A.N. 1341 (October 7, 2004).

The proposed regulations also clarify that the IRS may enter into an installment agreement that, by its terms, ends upon the expiration of the period of limitations on collection in section 6502 and § 301.6502–1, or at some prior date. A partial payment installment agreement that ends prior to the expiration of the collection period of limitations would allow the IRS to collect the balance of the tax liability against any property belonging to the taxpayer or request the Department of Justice to institute a judicial action to reduce the liability to judgment or take other actions to enforce the federal tax lien. The proposed regulations do not limit the authority of the IRS to enter into partial payment installment agreements that run to the end of the collection period.

Section 843 of the AJCA amended section 6159(c) to exclude partial payment installment agreements from the scope of installment agreements that must be accepted by the IRS. The proposed regulations provide that installment agreements guaranteed under section 6159(c) must provide for the full payment of the liabilities.

Section 843 of the AJCA added new section 6159(d), requiring the IRS to review partial payment installment agreements every two years. (Former subsections (d) and (e) were redesignated (e) and (f).) The primary purpose of the review is to determine whether the financial condition of the taxpayer has significantly changed so as to warrant an increase in the value of the payments being made. *See* H. Rep. No. 108–755, 108th Cong., 2d Sess., 2005 U.S.C.C.A.N. 1341 (October 7, 2004). The proposed regulations reflect this requirement.

The proposed regulations clarify the application of payments made pursuant to installment agreements. Consistent with Revenue Procedure 2002–26 (2002–1 C.B. 746), all payments will be applied in the best interests of the Government, unless the installment agreement provides otherwise. Current regulations provide rules for when the IRS may terminate an agreement but do not expressly provide that a taxpayer and the IRS may agree to end an agreement. The proposed regulations clarify that an installment agreement may be terminated by agreement between the taxpayer and the IRS, or may be superceded by a new agreement.

**Proposed Effective Date**

These regulations are proposed to be effective upon publication in the **Federal Register** of the final regulations.

**Special Analyses**

It has been determined that this notice of proposed rulemaking is not a significant regulatory action as defined in Executive Order 12866. Therefore, a regulatory assessment is not required. It also has been determined that section 553(b) of the Administrative Procedure Act (5 U.S.C. chapter 5) does not apply to these regulations and, because these regulations do not impose a collection of information under the Paperwork Reduction Act (44 U.S.C. 3501), the Regulatory Flexibility Act (5 U.S.C. chapter 6) does not apply to these regulations. Pursuant to section 7805(f) of the Code, this notice of proposed rulemaking will be submitted to the Chief Counsel for Advocacy of the Small

Business Administration for comment on its impact on small business.

**Comments and Requests for a Public Hearing**

Before these proposed regulations are adopted as final regulations, consideration will be given to any written comments (a signed original and eight (8) copies) or electronic comments that are submitted timely to the IRS. The IRS generally requests any comments on the clarity of the proposed rule and how it may be made easier to understand. All comments will be available for public inspection and copying. A public hearing may be scheduled if requested in writing by a person that timely submits written or electronic comments. If a public hearing is scheduled, notice of the date, time, and place for the hearing will be published in the **Federal Register**.

**Drafting Information**

The principal author of these regulations is G. William Beard, Office of Associate Chief Counsel (Procedure and Administration), Collection, Bankruptcy & Summonses Division.

**List of Subjects in 26 CFR Part 301**

Employment taxes, Estate taxes, Excise taxes, Gift taxes, Income taxes, Penalties, Reporting and recordkeeping requirements.

**Withdrawal of Proposed Regulations**

Accordingly, under the authority of 26 U.S.C. 7805, the notice of proposed rulemaking (REG–100841–97) that was published in the**Federal Register** on December 31, 1997 (62 FR 68241) is withdrawn.

**Proposed Amendments to the Regulations**

Accordingly, 26 CFR part 301 is proposed to be amended as follows:

## PART 301—PROCEDURE AND ADMINISTRATION

**Paragraph 1.** The authority citation for part 301 continues to read in part as follows:

**Authority:** 26 U.S.C. 7805 * * *

**Par. 2.** Section 301.6159–0 is added to read as follows:

### § 301.6159–0 Table of contents.

This section lists the major captions that appear in the regulations under § 301.6159–1.

**§ 301.6159–1 Agreements for the payment of tax liabilities in installments.**

(a) Authority.
(b) Procedures for submission and consideration of proposed installment agreements.
(c) Acceptance, form, and terms of installment agreements.
(d) Rejection of a proposed installment agreement.
(e) Modification or termination of installment agreements by the Internal Revenue Service.
(f) Effect of installment agreement or pending installment agreement on collection activity.
(g) Suspension of the statute of limitations on collection.
(h) Annual statement.
(i) Biannual review of partial payment installment agreements.
(j) Cross reference.
(k) Effective date.

**Par. 3.** Section 301.6159–1 is revised to read as follows:

### § 301.6159–1 Agreements for payment of tax liabilities in installments.

(a) *Authority.* The Commissioner may enter into a written agreement with a taxpayer that allows the taxpayer to make scheduled periodic payments of any tax liability if the Commissioner determines that such agreement will facilitate full or partial collection of the tax liability.

(b) *Procedures for submission and consideration of proposed installment agreements*—(1) *In general.* A proposed installment agreement must be submitted according to the procedures, and in the form and manner, prescribed by the Commissioner.

(2) *When a proposed installment agreement becomes pending.* A proposed installment agreement becomes pending when it is accepted for processing. The Internal Revenue Service (IRS) may not accept a proposed installment agreement for processing following reference of a case involving the liability that is the subject of the proposed installment agreement to the Department of Justice for prosecution or defense. The proposed installment agreement remains pending until the IRS accepts the proposal, the IRS notifies the taxpayer that the proposal has been rejected, or the proposal is withdrawn by the taxpayer. If a proposed installment agreement that has been accepted for processing does not contain sufficient information to permit the IRS to evaluate whether the proposal should be accepted, the IRS will request the taxpayer to provide the needed additional information. If the taxpayer does not submit the additional information that the IRS has requested within a reasonable time period after such a request, the IRS may reject the proposed installment agreement.

(3) *Revised proposals of installment agreements submitted following rejection.* If, following the rejection of a proposed installment agreement, the IRS determines that the taxpayer made a good faith revision of the proposal and submitted the revision within 30 days of the date of rejection, the provisions of this section shall apply to that revised proposal. If, however, the IRS determines that a revision was not made in good faith, the provisions of this section do not apply to the revision and the appeal period in paragraph (d)(3) of this section continues to run from the date of the original rejection.

(c) *Acceptance, form, and terms of installment agreements*—(1) *Acceptance of an installment agreement*—(i) *In general.* A proposed installment agreement has not been accepted until the IRS notifies the taxpayer or the taxpayer's representative of the acceptance. Except as provided in paragraph (c)(1)(iii) of this section, the Commissioner has the discretion to accept or reject any proposed installment agreement.

(ii) *Acceptance does not reduce liabilities.* The acceptance of an installment agreement by the IRS does not reduce the amount of taxes, interest, or penalties owed. (However, penalties may continue to accrue at a reduced rate pursuant to section 6651(h).)

(iii) *Guaranteed installment agreements.* In the case of a liability of an individual for income tax, the Commissioner shall accept a proposed installment agreement if, as of the date the individual proposes the installment agreement—

(A) The aggregate amount of the liability (not including interest, penalties, additions to tax, and additional amounts) does not exceed $10,000;

(B) The taxpayer (and, if the liability relates to a joint return, the taxpayer's spouse) has not, during any of the preceding five taxable years—

(*1*) Failed to file any income tax return;

(*2*) Failed to pay any required income tax; or

(*3*) Entered into an installment agreement for the payment of any income tax;

(C) The Commissioner determines that the taxpayer is financially unable to pay the liability in full when due (and the taxpayer submits any information the Commissioner requires to make that determination);

(D) The installment agreement requires full payment of the liability within three years; and

(E) The taxpayer agrees to comply with the provisions of the Internal Revenue Code for the period the agreement is in effect.

(2) *Form of installment agreements.* An installment agreement must be in writing. A written installment agreement may take the form of a document signed by the taxpayer and the Commissioner or a written confirmation of an agreement entered into by the taxpayer and the Commissioner that is mailed or personally delivered to the taxpayer.

(3) *Terms of installment agreements.* (i) Except as otherwise provided in this section, an installment agreement is effective from the date the IRS notifies the taxpayer or the taxpayer's representative of its acceptance until the date the agreement ends by its terms or until it is superceded by a new installment agreement.

(ii) By its terms, an installment agreement may end upon the expiration of the period of limitations on collection in section 6502 and § 301.6502–1, or at some prior date.

(iii) As a condition to entering into an installment agreement with a taxpayer, the Commissioner may require that—

(A) The taxpayer agree to a reasonable extension of the period of limitations on collection; and

(B) The agreement contain terms that protect the interests of the Government.

(iv) Except as otherwise provided in an installment agreement, all payments made under the installment agreement will be applied in the best interests of the Government.

(v) While an installment agreement is in effect, the Commissioner may request, and the taxpayer must provide, a financial condition update at any time.

(vi) At any time after entering into an installment agreement, the Commissioner and the taxpayer may agree to modify or terminate an installment agreement or may agree to a new installment agreement that supercedes the existing agreement.

(d) *Rejection of a proposed installment agreement*—(1) *When a proposed installment agreement becomes rejected.* A proposed installment agreement has not been rejected until the IRS notifies the taxpayer or the taxpayer's representative of the rejection, the reason(s) for rejection, and the right to an appeal.

(2) *Independent administrative review.* The IRS may not notify a taxpayer or taxpayer's representative of the rejection of an installment agreement until an independent administrative review of the proposed rejection is completed.

(3) *Appeal of rejection of a proposed installment agreement.* The taxpayer may administratively appeal a rejection of a proposed installment agreement to the IRS Office of Appeals (Appeals) if, within the 30-day period commencing the day after the taxpayer is notified of the rejection, the taxpayer requests an appeal in the manner provided by the Commissioner.

(e) *Modification or termination of installment agreements by the Internal Revenue Service*—(1) *Inadequate information or jeopardy.* The Commissioner may terminate an installment agreement if the Commissioner determines that—

(i) Information which was provided to the IRS by the taxpayer or the taxpayer's representative in connection with the granting of the installment agreement was inaccurate or incomplete in any material respect; or

(ii) Collection of any liability to which the installment agreement applies is in jeopardy.

(2) *Change in financial condition, failure to timely pay an installment or another Federal tax liability, or failure to provide requested financial information.* The Commissioner may modify or terminate an installment agreement if—

(i) The Commissioner determines that the financial condition of a taxpayer that is party to the agreement has significantly changed; or

(ii) A taxpayer that is party to the installment agreement fails to—

(A) Timely pay an installment in accordance with the terms of the installment agreement;

(B) Pay any other Federal tax liability when the liability becomes due; or

(C) Provide a financial condition update requested by the Commissioner.

(3) *Notice.* Unless the Commissioner determines that collection of the tax is in jeopardy, the Commissioner will notify the taxpayer in writing at least 30 days prior to modifying or terminating an installment agreement pursuant to paragraph (e)(1) or (2) of this section. The notice provided pursuant to this section must briefly describe the reason for the intended modification or termination. Upon receiving notice, the taxpayer may provide information showing that the reason for the proposed modification or termination is incorrect.

(4) *Appeal of modification or termination of an installment agreement.* The taxpayer may administratively appeal the modification or termination of an installment agreement to Appeals if, following issuance of the notice required by paragraph (e)(3) of this section and prior to the expiration of the 30-day period commencing the day after the modification or termination is to take effect, the taxpayer requests an appeal in the manner provided by the Commissioner.

(f) *Effect of installment agreement or pending installment agreement on collection activity*—(1) *In general.* No levy may be made to collect a tax liability that is the subject of an installment agreement during the period that a proposed installment agreement is pending with the IRS, for 30 days immediately following the rejection of a proposed installment agreement, during the period that an installment agreement is in effect, and for 30 days immediately following the termination of an installment agreement. If, prior to the expiration of the 30-day period following the rejection or termination of an installment agreement, the taxpayer appeals the rejection or termination decision, no levy may be made while the rejection or termination is being considered by Appeals. This section will not prohibit levy to collect the liability of any person other than the person or persons named in the installment agreement.

(2) *Exceptions.* Paragraph (f)(1) of this section shall not prohibit levy if the taxpayer files a written notice with the IRS that waives the restriction on levy imposed by this section, the IRS determines that the proposed installment agreement was submitted solely to delay collection, or the IRS determines that collection of the tax to which the installment agreement or proposed installment agreement relates is in jeopardy.

(3) *Other actions by the IRS while levy is prohibited*—(i) *In general.* The IRS may take actions other than levy to protect the interests of the Government with regard to the liability identified in an installment agreement or proposed installment agreement. Those actions include, for example—

(A) Crediting an overpayment against the liability pursuant to section 6402;

(B) Filing or refiling notices of Federal tax lien; and

(C) Taking action to collect from any person who is not named in the installment agreement or proposed installment agreement but who is liable for the tax to which the installment agreement relates.

(ii) *Proceedings in court.* Except as otherwise provided in this paragraph (f)(3)(ii), the IRS will not refer a case to the Department of Justice for the commencement of a proceeding in court, against a person named in an installment agreement or proposed installment agreement, if levy to collect the liability is prohibited by paragraph (f)(1) of this section. Without regard to whether a person is named in an installment agreement or proposed

installment agreement, however, the IRS may authorize the Department of Justice to file a counterclaim or third-party complaint in a refund action or to join that person in any other proceeding in which liability for the tax that is the subject of the installment agreement or proposed installment agreement may be established or disputed, including a suit against the United States under 28 U.S.C. 2410. In addition, the United States may file a claim in any bankruptcy proceeding or insolvency action brought by or against such person. If a person named in an installment agreement is joined in a proceeding, the United States obtains a judgment against that person, and the case is referred back to the IRS for collection, collection will continue to occur pursuant to the terms of the installment agreement. Notwithstanding the installment agreement, any claim or suit permitted will be for the full amount of the liabilities owed.

(g) *Suspension of the statute of limitations on collection.* The statute of limitations under section 6502 for collection of any liability shall be suspended during the period that a proposed installment agreement relating to that liability is pending with the IRS, for 30 days immediately following the rejection of a proposed installment agreement, and for 30 days immediately following the termination of an installment agreement. If, within the 30 days following the rejection or termination of an installment agreement, the taxpayer files an appeal with Appeals, the statute of limitations for collection shall be suspended while the rejection or termination is being considered by Appeals. The statute of limitations for collection shall continue to run if an exception under paragraph (f)(2) of this section applies and levy is not prohibited with respect to the taxpayer.

(h) *Annual statement.* The Commissioner shall provide each taxpayer who is party to an installment agreement under this section with an annual statement setting forth the initial balance owed at the beginning of the year, the payments made during the year, and the remaining balance as of the end of the year.

(i) *Biannual review of partial payment installment agreements.* The Commissioner shall perform a review of the taxpayer's financial condition in the case of a partial payment installment agreement at least once every two years. The purpose of this review is to determine whether the taxpayer's financial condition has significantly changed so as to warrant an increase in the value of the payments being made or termination of the agreement.

(j) *Cross reference.* Pursuant to section 6601(b)(1), the last day prescribed for payment is determined without regard to any installment agreement, including for purposes of computing penalties and interest provided by the Internal Revenue Code. For special rules regarding the computation of the failure to pay penalty while certain installment agreements are in effect, see section 6651(h) and § 301.6651–1(a)(4).

(k) *Effective date.* This section is applicable on the date final regulations are published in the **Federal Register**.

**Par. 4.** Section 301.6331–4 is revised to read as follows:

**§ 301.6331–4 Restrictions on levy while installment agreements are pending or in effect.**

*Cross-reference.* For provisions relating to the making of levies while an installment agreement is pending or in effect, see § 301.6159–1.

**Mark E. Matthews,**

*Deputy Commissioner of Services and Enforcement.*

[FR Doc. E7–3730 Filed 3–2–07; 8:45 am]

BILLING CODE 4830–01–P

## DEPARTMENT OF LABOR

### Occupational Safety and Health Administration

### 29 CFR Part 1910

**[Docket No. OSHA–2007–0021]**

**RIN 1218–AC16**

### Announcement of Stakeholder Meetings on Occupational Exposure to Ionizing Radiation

**AGENCY:** Occupational Safety and Health Administration, Labor.

**ACTION:** Announcement of stakeholder meetings.

**SUMMARY:** The Occupational Safety and Health Administration (OSHA) invites interested parties to participate in informal stakeholder meetings on Occupational Exposure to Ionizing Radiation. These meetings are a continuation of OSHA's information collection efforts on ionizing radiation.

**DATES:** *Stakeholder meetings:* The stakeholder meeting dates are:

1. 8:30 a.m.–4:30 p.m., March 16, 2007, Washington, DC.

2. 8:30 a.m.–4:30 p.m., March 26, 2007, Orlando, FL.

*Notice of intention to attend a stakeholder meeting:* You must submit a notice of intention to attend the Washington, DC, or Orlando, FL, stakeholder meeting by March 9, 2007.

**ADDRESSES:** *Stakeholder meetings:* The stakeholder meeting locations are:

1. Frances Perkins Building, U.S. Department of Labor, 200 Constitution Avenue, NW., Washington, DC 20210.

2. For the location of the Orlando, FL, stakeholder meeting, contact Liset Navas at (202) 693–1950.

*Notices of intention to attend a stakeholder meeting:* You may submit your notice of intention to attend a stakeholder meeting by any of the following methods:

*Electronic:* OSHA encourages you to submit your notice of intention to attend to *navas.liset@dol.gov.*

*Facsimile:* You may fax your notice of intention to attend to (202) 693–1678.

*Regular mail, express delivery, hand delivery, messenger and courier service:* Submit your notice of intention to attend to Liset Navas, OSHA, Directorate of Standards and Guidance, Room N–3718, U.S. Department of Labor, 200 Constitution Avenue, NW., Washington, DC 20210; telephone (202) 693–1950. The Department of Labor's and OSHA's normal hours of operation are 8:15 a.m. to 4:45 p.m., e.t.

*Instructions:* For further information on the stakeholder meetings and submitting notices of intention to attend one of the meetings, see the ''Public Participation'' heading in the **SUPPLEMENTARY INFORMATION** section of this notice.

Because of security-related procedures, the use of regular mail may cause a significant delay in the receipt of notices of intention to attend. For information about security procedures concerning the delivery of materials by hand, express mail, messenger or courier service, please contact Liset Navas at (202) 693–1950.

Electronic copies of this **Federal Register** notice are available at *http://www.regulations.gov.* This document, non-attributed notes from the stakeholder meetings, as well as news releases and other relevant information, will also be available at OSHA's Web page at *http://www.osha.gov.*

**FOR FURTHER INFORMATION CONTACT:** Michael Seymour, Director, OSHA, Office of Physical Hazards, Directorate of Standards and Guidance, Room N–3718, U.S. Department of Labor, 200 Constitution Avenue, NW., Washington, DC 20210; telephone (202) 693–1950.

**SUPPLEMENTARY INFORMATION:**

### Background

The use of ionizing radiation has increased significantly in recent years. Today, ionizing radiation is used in a

wide variety of workplaces and operations, including security operations, hospitals and medical offices, dental offices, manufacturing worksites, research facilities, forestry and other agricultural worksites, and wastewater treatment plants.

In 2005, OSHA initiated information collection efforts to obtain data, information, and comment on the increased workplace use of ionizing radiation and other related issues. These efforts started with the publication of a Request for Information (RFI) on May 3, 2005 (70 FR 22828). OSHA received 51 comments in response to the RFI. To supplement this information, OSHA is inviting interested parties to attend informal stakeholder meetings on the Occupational Exposure to Ionizing Radiation. OSHA will use the data and materials obtained through these information collections efforts to determine, in conjunction with other Federal agencies, whether regulatory action is necessary to protect employees from ionizing radiation exposure.

OSHA's existing standard on Ionizing Radiation (29 CFR 1910.1096) was adopted in 1971 pursuant to section 6(a) of the Act (29 U.S.C. 655). The standard has remained largely unchanged since that time.

OSHA's Ionizing Radiation standard applies to all workplaces except agricultural operations and those workplaces exempted from OSHA jurisdiction under section 4(b)(1) of the Occupational Safety and Health Act of 1970 (the Act) (29 U.S.C. 653). Section 4(b)(1) states:

> Nothing in this Act shall apply to working conditions of employees with respect to which other Federal agencies, and State agencies acting under section 274 of the Atomic Energy Act of 1954, as amended (42 U.S.C. 2021), exercise statutory authority to prescribe or enforce standards or regulations affecting occupational safety and health.

The Nuclear Regulatory Commission (NRC) has statutory authority for licensing and regulating nuclear facilities and materials as mandated by the Atomic Energy Act of 1954 (as amended)(42 U.S.C. 2011 *et seq.*), the Energy Reorganization Act of 1974 (as amended), the Nuclear Nonproliferation Act of 1978, and other applicable statutes. Specifically, the NRC has the authority to regulate source, byproduct and certain special nuclear materials (e.g., nuclear reactor fuel). This authority covers radiation hazards in NRC-licensed nuclear facilities produced by radioactive materials and plant conditions that affect the safety of radioactive materials and thus present an increased radiation hazard to workers.

In 1988, OSHA and NRC signed a memorandum of understanding (MOU) delineating the general areas of responsibility of each agency (CPL 2.86, December 22, 1989). The MOU specifies that at NRC-licensed facilities OSHA has authority to regulate occupational ionizing radiation sources not regulated by NRC (CPL 2.86). Examples of non-NRC regulated radiation sources include X-ray equipment, accelerators, electron microscopes, betatrons, and some naturally occurring radiation sources (CPL 2.86). (See the Ionizing Radiation RFI (70 FR 22828) for additional information on sources of ionizing radiation exposure, workplace uses of ionizing radiation, and health effects of ionizing radiation exposure.)

Most recently, the Energy Policy Act of 2005 authorized NRC to regulate material made radioactive by accelerators by adding ''accelerator-produced material'' to the definition of ''byproduct material'' that NRC is authorized to license and regulate. The Energy Policy Act directed NRC to issue licensing and compliance oversight regulations to carry out the legislation. Until NRC issues and begins enforcing those regulations, OSHA retains authority over both accelerators and the materials they produce.

**Stakeholder Meetings**

OSHA intends to hold four stakeholder meetings on Occupational Exposure to Ionizing Radiation, two of which the Agency is announcing in this notice. OSHA will publish a **Federal Register** notice announcing the other two stakeholder meetings when meeting arrangements are finalized. The first stakeholder meeting, to be held in Washington, DC, will cover the uses of ionizing radiation in the healing arts, including medicine, dentistry, chiropractor services and veterinary medicine. The second stakeholder meeting, to be held in Orlando, FL, in conjunction with the Annual Research Symposium of the American Society for Nondestructive Testing, will cover nondestructive testing. The other two stakeholder meetings will cover non-medical use of accelerators and the use of ionizing radiation in security operations. OSHA encourages interested parties to attend only the stakeholder meeting that deals with their industry, occupation, or operation.

The stakeholder meetings will be an opportunity for informal discussion and the exchange of data, ideas, and points of view. To make the stakeholder meetings as productive as possible, OSHA requests that interested parties attending stakeholder meetings be prepared to discuss the following issues relating to occupational exposure to ionizing radiation in their respective industries, occupations, or operations:

- Uses of ionizing radiation;
- Available exposure data;
- Controls utilized to minimize exposure; and
- Training.

In addition, OSHA will use the stakeholder meetings to discuss comments and materials received in response to the RFI.

Each stakeholder meeting will begin with OSHA's presentation on Agency responsibilities related to occupational exposure to ionizing radiation followed by stakeholder questions. OSHA will devote the remainder of each meeting to informal discussions on the topics above and related issues. In particular, OSHA is interested in hearing firsthand from employers and employees and in reviewing exposure data. Meeting participants are not expected to prepare and present formal testimony.

**Public Participation—Submission of Notices of Intention To Attend and Access to Docket**

You may submit notices of intention to attend one of the stakeholder meetings (1) electronically, (2) by facsimile, or (3) by hard copy. All notices must identify the Agency name and docket number for this notice (Docket No. OSHA–2007–0021). Because of security-related procedures, the use of regular mail may cause a significant delay in the receipt of notices of intention to attend. For information about security procedures concerning the delivery of materials by hand, express mail, messenger or courier service, please contact Liset Navas at (202) 693–1950.

Notices of intention to attend a stakeholder meeting must include the following information:

- Name and contact information;
- Affiliation (e.g., organization, association), if any;
- The stakeholder meeting you plan to attend;
- Whether you wish to be an active participant or observer; and
- Whether you need any special accommodations in order to attend or participate in a stakeholder meeting.

For access to comments and materials received in response to the RFI, go to OSHA Docket No. H–016 on OSHA's Web page at *http://www.osha.gov.* Contact the OSHA Docket Office, Docket No. H–016, Room N–2625, U.S. Department of Labor, 200 Constitution Avenue, NW., Washington, DC 20210; telephone (202) 693–2350 (OSHA's TTY number is (877) 889–5627) for

information about materials in the RFI docket that are not available through OSHA's Web page and for assistance in using the Web page to locate docket submissions.

Electronic copies of this **Federal Register** notice are available at *http://www.regulations.gov.* This document, as well as news releases and other relevant information, also are available at OSHA's Web page at *http://www.osha.gov.*

**Authority**

This notice was prepared under the direction of Edwin G. Foulke, Jr., Assistant Secretary for Occupational Safety and Health. It is issued under Sections 4 and 8 of the Occupational Safety and Health Act of 1970 (29 U.S.C. 653, 657), and Secretary of Labor's Order No. 5–2002 (67 FR 65008).

Signed at Washington, DC on this 27th day of February, 2007.

**Edwin G. Foulke, Jr.,**

*Assistant Secretary of Labor.*

[FR Doc. E7–3689 Filed 3–2–07; 8:45 am]

**BILLING CODE 4510–26–P**

---

## ENVIRONMENTAL PROTECTION AGENCY

### 40 CFR Part 63

**[EPA–HQ–OAR–2004–0094; FRL–8283–3]**

**RIN 2060–AM 75**

## National Emission Standards for Hazardous Air Pollutants: General Provisions

**AGENCY:** Environmental Protection Agency (EPA).

**ACTION:** Proposed rule; extension of public comment period.

**SUMMARY:** EPA is announcing that the comment period on the proposed amendments to the General Provisions of the National Emission Standards for Hazardous Air Pollutants published on January 3, 2007, is being extended until May 4, 2007.

**DATES:** *Comments.* The comment period has been extended from March 5, 2007. Comments must now be received on or before May 4, 2007.

**ADDRESSES:** Submit your comments, identified by Docket ID No. EPA–HQ–OAR–2004–0094, by one of the following methods:

- *http://www.regulations.gov.* Follow the on-line instructions for submitting comments.
- *E-mail: a-and-r-docket@epa.gov,* Attention Docket ID No. EPA–HQ–OAR–2004–0094.
- *Facsimile:* (202) 566–1741, Attention Docket ID No. EPA–HQ–OAR–2004–0094.
- *Mail:* U.S. Environmental Protection Agency, EPA West (Air Docket), 1200 Pennsylvania Ave., NW., Room: 3334, Mail Code: 6102T, Washington, DC, 20460, Attention E-Docket ID No. EPA–HQ–OAR–2004–0094.
- *Hand Delivery:* Air and Radiation Docket and Information Center, U.S. Environmental Protection Agency, 1301 Constitution Ave., NW, Room: 3334, Mail Code: 6102T, Washington, DC, 20460, Attention Docket ID No. EPA–HQ–OAR–2004–0094. Such deliveries are only accepted during the Docket's normal hours of operation, and special arrangements should be made for deliveries of boxed information.

*Instructions:* Direct your comments to Docket ID No. EPA–HQ–OAR–2004–0094. The EPA's policy is that all comments received will be included in the public docket without change and may be made available online at *http://www.regulations.gov,* including any personal information provided, unless the comment includes information claimed to be Confidential Business Information (CBI) or other information whose disclosure is restricted by statute. Do not submit information that you consider to be CBI or otherwise protected through, or e-mail. Send or deliver information identified as CBI only to the following address: Mr. Roberto Morales, OAQPS Document Control Officer, U.S. EPA (C404–02), Attention Docket ID No. EPA–HQ–OAR–2004–0094, Research Triangle Park, NC 27711. Clearly mark the part or all of the information that you claim to be CBI. The Web site is an ''anonymous access'' system, which means EPA will not know your identity or contact information unless you provide it in the body of your comment. If you send an e-mail comment directly to EPA without going through , your e-mail address will be automatically captured and included as part of the comment that is placed in the public docket and made available on the Internet. If you submit an electronic comment, EPA recommends that you include your name and other contact information in the body of your comment and with any disk or CD–ROM you submit. If EPA cannot read your comment due to technical difficulties and cannot contact you for clarification, EPA may not be able to consider your comment. Electronic files should avoid the use of special characters, any form of encryption, and be free of any defects or viruses.

*Docket:* All documents in the docket are listed in the index. Although listed in the index, some information is not publicly available, (i.e., CBI or other information whose disclosure is restricted by statute). Certain other material, such as copyrighted material will be publicly available only in hard copy. Publicly available docket materials are available either electronically at *http://www.regulations.gov* or in hard copy at the Air and Radiation Docket, EPA/DC, EPA West, Room 3334, 1301 Constitution Ave., NW, Washington, DC. The Public Reading Room is open from 8:30 a.m. to 4:30 p.m., Monday through Friday, excluding legal holidays. The telephone number for the Public Reading Room is (202) 566–1744, and the telephone number for the Air and Radiation Docket is (202) 566–1742.

**Note:** The EPA Docket Center suffered damage due to flooding during the last week of June 2006. The Docket Center is continuing to operate. However, during the cleanup, there will be temporary changes to Docket Center telephone numbers, addresses, and hours of operation for people who wish to make hand deliveries or visit the Public Reading Room to view documents. Consult EPA's **Federal Register** notice at 71 FR 38147 (July 5, 2006) or the EPA Web site at *http://www.epa.gov/epahome/dockets.htm* for current information on docket operations, locations and telephone numbers. The Docket Center's mailing address for U.S. mail and the procedure for submitting comments to are not affected by the flooding and will remain the same.

**FOR FURTHER INFORMATION CONTACT:** Rick Colyer, Program Design Group (D205–02), Sector Policies and Programs Division, Office of Air Quality Planning and Standards, U.S. EPA, Research Triangle Park, NC 27711, telephone number (919) 541–5262, electronic mail (e-mail) address, *colyer.rick@epa.gov.*

**SUPPLEMENTARY INFORMATION:**

*Regulated Entities.* Categories and entities potentially regulated by this action include all major sources regulated under section 112 of the CAA.

*World Wide Web (WWW).* In addition to being available in the docket, an electronic copy of today's notice will be available on the WWW through the Technology Transfer Network (TTN). Following the Assistant Administrator's signature a copy of this notice will be posted on EPA's Technology Transfer Network (TTN) policy and guidance page for newly proposed or promulgated rules at *http://www.epa.gov/ttn/oarpg.* The TTN provides information and technology exchange in various areas of air pollution control.

*Comment Period:* We received 2 requests to extend the public comment

period on the proposed amendments to the NESHAP General Provisions (72 FR 69, January 3, 2007). We agreed to these requests and are extending the comment period to May 4, 2007. Public comments must be received on or before that date.

We expect to add to the docket by the end of March some additional information and analyses relevant to the proposal. Commenters will then have approximately 30 days to review the additional information and provide any comments by May 4, 2007. Anyone interested in reviewing the additional information should check the docket beginning in April.

### How Can I Get Copies of the Proposed Amendments and Other Related Information?

EPA has established the official public docket for the proposed rulemaking under docket ID No. EPA–HQ–OAR–2004–0094. Information on how to access the docket is presented above in the **ADDRESSES** section. In addition, information may be obtained from the Web page for the proposed rulemaking at: *http://www.epa.gov/ttn/atw/gp/gppg.html.*

Dated: February 28, 2007.

**Elizabeth Craig,**

*Acting Assistant Administrator for Air and Radiation.*

[FR Doc. E7–3758 Filed 3–2–07; 8:45 am]

**BILLING CODE 6560–50–P**

---

## DEPARTMENT OF COMMERCE

## National Oceanic and Atmospheric Administration

## 50 CFR Part 648

**[Docket No. 070215035–7035–01; I.D. 020907E]**

**RIN 0648–AT62**

## Magnuson-Stevens Fishery Conservation and Management Act Provisions; Fisheries of the Northeastern United States; Atlantic Surfclam and Ocean Quahog Fishery; Framework Adjustment 1

**AGENCY:** National Marine Fisheries Service (NMFS), National Oceanic and Atmospheric Administration (NOAA), Commerce.

**ACTION:** Proposed rule; request for comments.

**SUMMARY:** NMFS proposes regulations to implement Framework Adjustment 1 (FW 1) to the Atlantic Surfclam and Ocean Quahog Fishery Management Plan (FMP). FW 1 management measures were developed by the Mid-Atlantic Fishery Management Council (Council) and propose to implement a vessel monitoring system (VMS) requirement for vessels participating in the surfclam and ocean quahog fisheries. The VMS requirement would replace the current telephone-based notification requirement necessary prior to departure on a surfclam or ocean quahog fishing trip. The intent of this action is to propose management measures that would improve the management and enforcement of regulations governing the Atlantic surfclam and ocean quahog fishery in the U.S. Exclusive Economic Zone.

**DATES:** Comments must be received no later than 5 p.m., eastern standard time, on April 4, 2007.

**ADDRESSES:** You may submit comments by any of the following methods:

- *Mail:* Patricia A. Kurkul, Regional Administrator, Northeast Region, NMFS, One Blackburn Drive, Gloucester, MA 01930–2298. Mark on the outside of the envelope, ''Comments on Framework 1 VMS Proposed Rule.''
- *Fax:* (978) 281–9135.
- *E-mail:* 0648AT62@noaa.gov. Include in the subject line of the email the following document identifier: ''Comments on Framework 1.''
- *Federal e-Rulemaking Portal: http://www.regulations.gov.*

Copies of supporting documents, including the Regulatory Impact Review (RIR) and Initial Regulatory Flexibility Analysis (IRFA) are available from Daniel Furlong, Executive Director, Mid-Atlantic Fishery Management Council, Room 2115, Federal Building, 300 South New Street, Dover, DE 19904–6790. A copy of the RIR/IRFA is accessible via the Internet at *http://www.nero.noaa.gov/.*

Written comments regarding the burden-hour estimates or other aspects of the collection-of-information requirements contained in this proposed rule should be submitted to the Regional Administrator at the address above and to David Rostker, Office of Management and Budget (OMB), by e-mail at *David_Rostker@omb.eop.gov*, or fax to (202) 395–7285.

**FOR FURTHER INFORMATION CONTACT:** Brian R. Hooker, Fishery Policy Analyst, 978–281–9220.

**SUPPLEMENTARY INFORMATION:**

### Background

The Council voted on December 13, 2006, to recommend to NMFS that a VMS requirement for Atlantic surfclam and ocean quahog fishing vessels, including Maine mahogany quahog vessels, be implemented for their respective fisheries. This action was originally approved by the Council as part of Amendment 13 to the FMP in 2003. However, the Council recommended that the Regional Administrator implement a VMS requirement for the fisheries when an economically viable system became available to the industry. Three vendors have been approved by NMFS for use in the Northeast Region. The costs of the VMS units have decreased since 2003 so that purchase and installation costs now range from approximately $3,150 to $4,200, and recurring monthly costs range from $25 to $100. As a result of the lower costs, the Council voted in June 2005 to begin the development of a framework adjustment to require the mandatory use of VMS for surfclams and ocean quahogs. The Council held two public meetings, on October 11, 2006, and December 13, 2006, to discuss the management measures contained in FW1 and, on December 13, 2006, the Council selected and approved the VMS management measures to submit to NMFS for approval and implementation.

### Proposed Measures

A VMS requirement is being proposed for the surfclam and ocean quahog fishery in order to: (1) eliminate the requirement to notify NMFS Office of Law Enforcement via telephone prior to beginning a fishing trip; (2) facilitate the monitoring of areas closed to fishing due to environmental degradation (e.g., harmful algal blooms and former dump sites); and (3) facilitate the monitoring of borders between state and Federal regulatory juridictions. The VMS requirement would include a fishing trip declaration prior to starting a fishing trip and automatic hourly polling of the vessel position. Proof of an installed and operational VMS unit would be a condition for the issuance of the applicable vessel permits, with some exceptions granted to the limited access Maine mahogany quahog permit. There are three commercial fishing vessel permit categories for these fisheries: An open access Atlantic surfclam permit (SF 1); an open access ocean quahog permit (OQ 6); and a limited access Maine mahogany quahog permit (OQ 7). FW 1 management measures would implement a requirement for vessels participating in the fisheries to use a VMS to facilitate better monitoring and reporting in the Atlantic surfclam and ocean quahog fisheries. The VMS requirement would replace the current management measure that requires vessels fishing outside the Maine mahogany quahog fishery to call their local NOAA law enforcement office prior to departure on an Atlantic

surfclam or ocean quahog fishing trip to provide vessel and trip information. Furthermore, the VMS requirement would facilitate the monitoring of state and Federal fishing areas, and areas closed to environmental degradation or harmful algal blooms. The VMS unit would be required of all vessels issued an Atlantic surfclam (SF 1) or ocean quahog (OQ 6) open access permit. For vessels issued a Maine mahogany quahog limited access permit (OQ 7), the VMS requirement would be delayed by 1 year from the effective date of the final rule to allow greater time for the participants in the smaller, artisanal fishery in Maine, to comply with the new requirement.

Vessels required to use VMS under this action would declare their intended fishing activity via the VMS unit prior to crossing the vessel demarcation line, as specified at § 648.10, before beginning a fishing trip. Under this action, vessels would have their position automatically polled once per hour. Vessels would be able to power-down their VMS unit if one of the following conditions is met: (1) The vessel will be continuously out of the water for more than 72 hr, and the vessel signs out of the VMS program by obtaining a valid letter of exemption from the Administrator, Northeast Region, NMFS (Regional Administrator); or (2) the vessel declares out of the fishery and the VMS program for a minimum period of 30 consecutive days and the vessel signs out of the VMS program by obtaining a valid letter of exemption from the Regional Administrator, the vessel does not engage in any fisheries until the VMS unit is turned back on, and the vessel complies with all conditions and requirements of said letter.

In addition to the management measures contained in FW 1, this proposed rule would clarify that federally permitted Atlantic surfclam and ocean quahog dealers and processors must retain used ITQ cage tags for 60 days beyond the end of the calendar year. Previously, cage tags were required to be retained for an unspecified period of time, which created confusion when seafood dealers wished to dispose of used cage tags.

*Atlantic Surfclam (SF 1) and Ocean Quahog (OQ6) VMS Measures*

Effective upon implementation of this action, this VMS requirement would affect all vessel owners that apply for and are subsequently issued the SF 1 and/or OQ 6 open access permit. More than 1,500 vessels were issued these permits in 2006, however only approximately 40 vessels actually participated in this fishery in Federal waters. It is believed that many individuals apply for this permit because it is available to most vessels and there is no additional cost to vessel owners to obtain open access permits for fisheries in which they do not currently participate. Upon the effective date of the proposed measure, if the VMS requirement is not met, the SF 1 and/or OQ 6 permit will be cancelled until such time that the vessel comes into compliance with the management measures and reapplies for the permit.

*Maine Ocean Quahog (OQ 7) VMS Measures*

All vessels with a limited access OQ 7 permit would be granted an additional year from the effective date of a final rule implementing FW 1 to come into compliance with the VMS requirement. This additional year is proposed for the Maine mahogany quahog fishery because it operates in an area where shore-based electrical power may not currently be available. Vessel owners in this fishery often moor their vessels away from shore due to lack of shoreside facilities and, when shoreside docking facilities are available, electrical power may not be included. Thus, it is anticipated that this sector will have the additional burden of procuring an auxiliary power system (e.g., an extra battery, photovoltaic cells) in order to comply with the VMS requirement to maintain power to the VMS unit 24 hr per day. Since the revocation of an OQ 7 limited access permit could result in the permit becoming ineligible for renewal, special provision would be made for the implementation of the VMS requirement for the OQ 7 permit category (in addition to being effective 1 year from the effective date of the final rule implementing FW 1), in that the limited access permit would not be cancelled for failure to install a VMS unit as long as the vessel is not participating in the Maine mahogany quahog fishery. Once a vessel comes into compliance with the VMS requirement, the vessel owner must maintain an operational VMS unit onboard the vessel until such time that the permit is relinquished or the vessel meets a condition to power-down the VMS unit and receives authorization from the Regional Administrator.

**Classification**

At this time, NMFS has not determined that FW 1, which this proposed rule would implement, is consistent with the national standards of the Magnuson-Stevens Act and other applicable laws. NMFS, in making that determination, will take into account the data, views, and comments received during the comment period.

This proposed rule has been determined to be not significant for purposes of Executive Order 12866.

Pursuant to 5 U.S.C. 603, an IRFA has been prepared, which describes the economic impacts that this proposed rule, if adopted, would have on small entities. A description of the reasons why this action is being considered, as well as the objectives of and legal basis for this proposed rule, is found in the preamble to this document. There are no Federal rules that duplicate, overlap, or conflict with this proposed rule. This action proposes to implement a mandatory VMS requirement in the Atlantic surfclam and ocean quahog fisheries. This action was compared to five different alternatives, including a no action (status quo) alternative. The other, non-preferred alternatives included: (1) A mandatory VMS requirement for all surfclam and ocean quahog vessels without a deferment of the requirement for Maine mahogany quahog vessels for the first year (Alternative 2a); (2) a mandatory VMS requirement for all surfclam and ocean quahog vessels that includes a VMS power-down provision for all vessels moored or docked in the Maine mahogany quahog zone (Alternative 3a); (3) a mandatory VMS requirement for all surfclam and ocean quahog vessels with an exemption to the VMS requirement to all vessels fishing exclusively in the Maine mahogany quahog zone (Alternative 3b); and (4) a mandatory VMS requirement for all surfclam and ocean quahog vessels with an exemption to all vessels participating in the limited access Maine mahogany quahog fishery (Alternative 3c).

*Description and Estimate of the Number of Small Entities to Which This Proposed Rule Would Apply*

The Small Business Administration (SBA) defines a small commercial fishing entity as a firm with gross receipts not exceeding $3.5 million. In 2005, a total of 80 vessels were reported harvesting surfclams and/or ocean quahogs from the federally managed surfclam and ocean quahog fisheries. Thirty-two of the vessels were operating in the limited access Maine mahogany quahog fishery, and 48 vessels were participating in the open access surfclam and ocean quahog ITQ program. In 2005, average gross income for each species category was: (1) $728,780 per vessel for ocean quahog harvesters; (2) $846,186 per vessel for surfclam harvesters; and (3) $120,591 per vessel for the Maine mahogany quahog limited access fishery. Each

vessel in this analysis is treated as a single entity for purposes of size determination and impact assessment. All 80 commercial fishing entities fall within the SBA size standard for small commercial fishing entities.

*Economic Impacts of This Proposed Action*

As of November 2006, a total of 62 vessels had reported participating in the 2006 Federal surfclam and ocean quahog fisheries. Of those vessels, 29 were not registered with NMFS as having an operational VMS unit on the vessel. The 33 vessels that have VMS likely have it installed as a result of a requirement for another fishery in which the vessel participates. Initial, one-time, purchase and installation costs for a VMS unit from one of the three vendors ranges from $1,800 - $3,800. Annual service costs are estimated to be between $360 and $960, depending on vendor and service plan. Thus, assuming current fishery participation levels, total costs in the first year of implementation of this proposed rule would be approximately $50,000 (includes purchase, installation, and annual service costs for 14 vessels) in total for all of the affected vessel owners. In the second year of implementation, when the limited access Maine mahogany quahog vessels would need to comply with the VMS requirement, the total cost would be approximately $77,000. This figure includes the purchase of a VMS unit and auxiliary battery (see below), installation, and annual service costs for 19 vessels. As discussed in the preamble, it is assumed that the vessels participating in the Maine mahogany quahog fishery do not have access to shore-based electrical power. In order to stay in compliance with keeping the VMS turned on 24 hr each day, including while moored or docked, it is estimated that the vessels will need to purchase an auxiliary battery to maintain power to the VMS unit. The one-time cost of an auxiliary battery is estimated to be $500 per vessel. Thus, the six vessels that already have VMS installed on their vessels would incur an additional cost of an auxiliary battery (the current VMS requirement for these vessels allows for the vessels to power-down the VMS unit when it is moored or docked). In addition, the annual service costs for the 14 vessels from the first year of implementation would also recur, at approximately $5,040. This brings the total cost across the whole fishery for the second year of implementation to $85,000.

Approximately 62 vessels are currently active in these fisheries. However, many of these vessels already have VMS as a requirement of another fishery, such as the Atlantic sea scallop, Northeast multispecies, monkfish, and/or Atlantic herring fisheries. As a result of their current VMS status, these vessels were excluded from the analysis of the VMS purchase, installation, and service costs in years one and two of implementation. However, if the vessels that are already in compliance with the VMS requirement were to cancel their participation in those fisheries for which the VMS unit is also required, the total annual cost to the industry in year three and beyond (service costs only) would be approximately $23,000 (62 vessels x $360 in annual fees).

The indirect economic impact of the proposed rule to entities, other than those directly impacted, is a slight increase in exvessel prices. The market for clam meats is relatively soft and quite competitive coast-wide, so it is unlikely that producers would be able to pass along much of the increased costs to processors and consumers.

*Economic Impacts of Alternatives to the Proposed Action*

The Council analyzed five ocean quahog quota alternatives in addition to the preferred alternative, which are summarized in the introduction to this section. The range of alternatives are from a status-quo (no action) alternative to an alternative requiring compliance with the VMS requirement to begin for all vessels once a final rule implementing FW 1 is effective. The current, status quo, call-in notification is estimated to take 2 minutes (OMB Control Number 0648–0202). However, the call-in notification has been suspended for the limited access Maine mahogany quahog fishery since the establishment of this sector in 1998. In comparison to this status quo, each of the four non-preferred alternatives would result in slight increases in exvessel values, as all the alternatives contained a VMS requirement for all or part of the fishery. Alternative 2a is very similar to the preferred alternative except that it would not allow vessels participating in the Maine mahogany quahog limited access fishery to defer the VMS requirement for 1 year. Thus, the cost for this requirement would be similar to that of the preferred alternative except that the start-up costs ($116,450) would be borne by the whole industry in the first year of implementation. After the first year of implementation, the increase in vessel costs beyond status quo would be $11,880. Alternative 3a would also require all vessels to purchase and install a VMS unit. However, this alternative would allow vessels participating exclusively in the Maine mahogany quahog fishery to turn off their VMS units when moored or tied to the dock. Thus purchase and installation of an auxiliary power supply would not be necessary. This would result an initial additional cost of approximately $103,950 in the first year of the VMS requirement falling, to $11,880 each year afterward. The economic impacts of alternatives 3b and 3c would be the same in relation to the status quo. Both of these alternatives would exempt vessels operating in either the Maine mahogany quahog zone (Alternative 3b, area-based exemption) or the limited access Maine mahogany quahog fishery (Alternative 3c, permit-based exemption) from the VMS requirement in its entirety. The ITQ vessels that fish exclusively in the Maine mahogany quahog zone already have VMS installed on their vessels as a result of a requirement for another fishery. Thus the 14 actively participating ITQ vessels that do not have VMS installed would be the only vessels bearing the costs of these alternatives. These two alternatives have the smallest economic impact, an increase of $44,100 in the first year for initial VMS purchase and installation costs, and $5,500 in service and maintenance costs each year thereafter, in comparison to the other alternatives.

**Reporting and Recordkeeping Requirements**

This proposed rule contains collection of information requirements subject to review and approval by the OMB under the Paperwork Reduction Act (PRA). This action would eliminate the collection currently approved under OMB Control Number 0648–0202. A new control number would be assigned to this new collection until such time that 0648–0202 may be modified. Annualized over a 3–yr period, the direct financial cost to the fishing industry for the purchase, installation, and service of equipment in order to comply with the VMS trip declaration requirement would be $73,491. For this proposed action the actual reporting burden (e.g., vessel trip declaration) would not change significantly from that currently approved under 0648–0202 because, although the reporting time for each vessel would be reduced, the total number of vessels required to report would increase, due to the inclusion of the Maine mahogany quahog fishery. The vessel owner or operator of a vessel participating in the ITQ program would no longer have to telephone a local port office prior to departure on a surfclam or ocean

quahog trip and verbally give the following information: Name of the vessel; NMFS permit number assigned to the vessel; expected date and time of departure from port, whether the trip will be directed on surfclams or ocean quahogs, expected date, time, and location of landing; and name of individual providing notice. The reporting burden for this requirement was estimated at 2 min per response (OMB Control Number 0648–0202) when the reporting requirement was implemented in 1993 (58 FR 14342, March 17, 1993).

Under this proposed rule, the vessel owner or operator would only be required to select the appropriate fishery displayed on the VMS monitor located in the wheelhouse of the vessel. All identifying information is transmitted with the selection and authorities would be able to monitor for themselves when the vessel departs and returns from the fishing trip. On the surfclam and ocean quahog trip declaration screen, there would be three options to choose from: (1) Atlantic surfclam ITQ trip; (2) ocean quahog ITQ trip; and (3) Maine mahogany quahog trip. It is estimated that choosing the appropriate trip declaration would take 1 min per response. In 2005, there were approximately 5,580 fishing trips taken by the entire industry. This would make the time burden for the VMS trip declaration 92 hr per year. When the time to respond to the providing proof of VMS installation, and time for requesting an exemption to turn off the VMS unit are considered, the annual reporting burden is 100 hr. The public's reporting burden for the collection-of information requirements includes the time for reviewing instructions, searching existing data sources, gathering and maintaining the data needed, and completing and reviewing the collection-of-information requirements. Notwithstanding any other provision of the law, no person is required to respond to, and no person shall be subject to a penalty for failure to comply with a collection of information subject to the requirements of the PRA, unless that collection of information displays a currently valid OMB control number.

**List of Subjects in 50 CFR Part 648**

Fisheries, Fishing, Reporting and recordkeeping requirements.

Dated:February 27, 2007.

**Samuel D. Rauch III,**

*Deputy Assistant Administrator for Regulatory Programs, National Marine Fisheries Service.*

For reasons set out in the preamble, 50 CFR part 648 is proposed to be amended as follows:

## PART 648—FISHERIES OF THE NORTHEASTERN UNITED STATES

1. The authority citation for part 648 continues to read as follows:

**Authority:** 16 U.S.C. 1801 *et seq.*

2. In § 648.2, a definition for ''Individual Transferable Quota (ITQ) Program'' and ''Mahogany Quahog'' are added in alphabetical order and the definition for ''Vessel Monitoring System'' is revised to read as follows:

### § 648.2 Definitions.

* * * * *

*Individual Transferable Quota (ITQ) Program* means, for the Atlantic surfclam and ocean quahog fishery, the annual individual allocation of quota specified at § 648.70.

* * * * *

*Mahogany Quahog* see *Ocean Quahog.*

* * * * *

*Vessel Monitoring System (VMS)* means a vessel monitoring system or VMS unit as set forth in § 648.9 and approved by NMFS for use on Atlantic sea scallop, NE multispecies, monkfish, Atlantic herring, and Atlantic surfclam and ocean quahog vessels, as required by this part.

* * * * *

3. In § 648.4, paragraph (a)(4)(ii) is revised to read as follows:

### § 648.4 Vessel permits.

(a)* * *

(4)* * *

(ii) *VMS Requirement.* (A) *Surfclam and ocean quahog open access permits.* In order to be eligible for issuance of an open access surfclam or ocean quahog permit the vessel owner must have installed on the vessel an operational VMS unit that meets the criteria set forth in § 648.9. The vessel owner/operator must provide to the NMFS Northeast Region Permit Office a copy of the VMS vendor's installation receipt or provide verification of vendor activation from a NMFS-approved VMS vendor as described in § 648.9.

(B) *Maine mahogany quahog limited access permit.* In order to be eligible for issuance of a Maine mahogany quahog permit, the vessel owner must have installed on the vessel an operational VMS unit that meets the criteria set forth in § 648.9. By [*DATE 1 YEAR FROM EFFECTIVE DATE OF FINAL RULE*], unless otherwise exempted under section § 648(a)(4)(ii)(B)(1) of this section. The vessel owner/operator must provide to NMFS a copy of the VMS vendor's installation receipt or provide verification of vendor activation from a NMFS-approved VMS vendor as described in § 648.9.

(*1*) *Special VMS exemption for Maine mahogany quahog vessels.* Vessel owners eligible to renew a limited access Maine mahogany quahog permit may do so without proof of installation of a VMS, provided the vessel does not fish for, catch, or possess; or attempt to fish for, catch, or posses; Maine mahogany quahogs. Proof of VMS installation must be provided to NMFS Northeast Region Permit Office prior to departure on any fishing trip on which ocean quahogs may be caught or landed. Once a vessel issued a Maine mahogany quahog permit has elected to participate in the Maine mahogany quahog fishery, the vessel must keep the VMS unit turned on and functioning as specified under § 648.9. Once a limited access Maine mahogany quahog permitted vessel has participated in the Maine mahogany quahog fishery, this exemption no longer applies.

(*2*) [Reserved]

* * * * *

4. In § 648.9, paragraphs (c)(2)(i)(B) and (e) are revised to read as follows:

### § 648.9 VMS requirements.

* * * * *

(c) * * *

(2) * * *

(i) * * *

(B) For vessels fishing with a valid NE multispecies limited access permit, or a valid surfclam and ocean quahog permit specified at § 648.4(a)(4), the vessel owner signs out of the VMS program for a minimum period of 30 consecutive days by obtaining a valid letter of exemption pursuant to paragraph (c)(2)(ii) of this section, the vessel does not engage in any fisheries until the VMS unit is turned back on, and the vessel complies with all conditions and requirements of said letter; or

* * * * *

(e) *New and replacement VMS installations.* The vessel owner/operator required to use a VMS must provide to the NMFS Northeast Region Permit Office a copy of the VMS vendor's installation receipt or provide verification of vendor activation prior to departure on a fishing trip requiring VMS. A VMS certification of installation form is available from the NMFS Regional Administrator. Should a VMS

unit require replacement, a vessel owner must submit documentation to the Regional Administrator, within 3 days of installation and prior to the vessel's next trip, verifying that the new VMS unit is an operational, approved system as described under paragraph (a) of this section. Vessel owners required to use a VMS in the Atlantic surfclam and ocean quahog fishery, as specified at § 648.15(b), must confirm the VMS operation and communications service to NMFS by calling 978–281–9213 to ensure that position reports are automatically sent to and received by NMFS Office of Law Enforcement (OLE). For the Atlantic surfclam and ocean quahog fishery, NMFS does not regard the fishing vessel as meeting the VMS requirements until automatic position reports and a manual declaration are received.

* * * * *

5. In § 648.10, paragraphs (b)(1)(vii) and (b)(1)(viii) are added, and (b)(2) is revised to read as follows:

**§ 648.10 DAS and VMS notification requirements.**

* * * * *

(b) * * *

(1) * * *

(vii) A vessel issued a surfclam (SF 1) or an ocean quahog (OQ 6) open access permit;

(viii) Effective [*DATE 1 YEAR FROM EFFECTIVE DATE OF FINAL RULE*] a vessel issued a Maine mahogany quahog (OQ 7) limited access permit, unless otherwise exempted under paragraph § 648.4(a)(4)(ii)(B)(*1*);

* * * * *

(2) The owner of such a vessel specified in paragraph (b)(1) of this section, with the exception of a vessel issued a limited access NE multispecies permit as specified in paragraph (b)(1)(vi) of this section, must provide documentation to the Regional Administrator at the time of application for a limited access permit that the vessel has an operational VMS unit installed on board that meets the minimum performance criteria, unless otherwise allowed under this paragraph (b). If a vessel has already been issued a limited access permit without the owner providing such documentation, the Regional Administrator shall allow at least 30 days for the vessel to install an operational VMS unit that meets the criteria and for the owner to provide documentation of such installation to the Regional Administrator. The owner of a vessel issued a limited access NE multispecies permit that fishes or intends to fish under a Category A or B DAS as specified in paragraph (b)(1)(vi) of this section, must provide documentation to the Regional Administrator that the vessel has an operational VMS unit installed on board that meets those criteria prior to fishing under a groundfish DAS. NMFS shall send letters to all limited access NE multispecies DAS and Atlantic surfclam and ocean quahog permit holders and provide detailed information on the procedures pertaining to VMS purchase, installation, and use.

* * * * *

6. In § 648.14, paragraph (a)(25) is revised to read as follows:

**§ 648.14 Prohibitions.**

(a) * * *

(25) Fail to comply with any of the notification requirements specified in § 648.15(b) including:

(i) Fish for, land, take, possess, or transfer surfclams or ocean quahogs under an open access surfclam or ocean quahog permit without having provided proof to the Regional Administrator of NMFS that the vessel has a fully functioning VMS unit on board the vessel and declared a fishing trip via the VMS unit as specified at § 648.15(b);

(ii) Beginning [DATE ONE YEAR FROM EFFECTIVE DATE OF FINAL RULE] fish for, land, take, possess, or transfer ocean quahogs under a limited access Maine mahogany quahog permit without having provided proof to the Regional Administrator of NMFS that the vessel has a fully functioning VMS unit on board the vessel and declared a fishing trip via the VMS unit as specified at § 648.15(b).

* * * * *

7. In § 648.15, paragraph (b) is revised to read as follows:

**§ 648.15 Facilitation of enforcement.**

* * * * *

(b) Special notification requirements applicable to surfclam and ocean quahog vessel owners and operators. (1) Surfclam and ocean quahog open access permitted vessels. Vessel owners or operators issued an open access surfclam or ocean quahog open access permit for fishing in the ITQ Program, as specified at § 648.70, are required to declare their intended fishing activity via VMS prior to crossing the VMS demarcation line specified at § 648.10(a).

(2) *Maine mahogany quahog limited access permitted vessels.* Beginning [*DATE 1 YEAR FROM EFFECTIVE DATE OF FINAL RULE*], vessel owners or operators issued a limited access Maine mahogany quahog permit for fishing for Maine mahogany quahogs in the Maine mahogany quahog zone, as specified at § 648.76, are required to declare via VMS, prior to departure on a fishing trip, into the Maine mahogany quahog zone their intended fishing activity, unless otherwise exempted under paragraph § 648.4(a)(4)(ii)(B)(*1*).

(3) *Declaration out of surfclam and ocean quahog fisheries.* Owners or operators that are transiting between ports or fishing in a fishery other than surfclams and ocean quahogs must either declare out of fisheries or declare the appropriate fishery, if required, via the VMS unit, before beginning the trip. The owner or operator discontinuing a fishing trip in the EEZ or Maine mahogany quahog zone must return to port and offload any surfclams or ocean quahogs prior to commencing fishing operations in the waters under the jurisdiction of any state.

(4) *Inspection by authorized officer.* The vessel permits, the vessel, its gear, and catch shall be subject to inspection upon request by an authorized officer.

(5) *Authorization for use of fishing trip notification via telephone.* The Regional Administrator may authorize or require, the notification of a surfclam or ocean quahog fishing trip information via a telephone call to the NMFS Office of Law Enforcement nearest to the point of offloading instead of the use of VMS. If authorized, the vessel owner or operator must accurately provide the following information prior to departure of their vessel from the dock to fish for surfclams or ocean quahogs in the EEZ: Name of the vessel; NMFS permit number assigned to the vessel; expected date and time of departure from port; whether the trip will be directed on surfclams or ocean quahogs; expected date, time, and location of landing; and name of individual providing notice. If use of a telephone call-in notification is authorized or required, the Regional Administrator shall notify affected permit holders through a letter, notification in the **Federal Register**, e-mail, or other appropriate means.

* * * * *

8. In § 648.75, paragraph (a) is revised to read as follows:

**§ 648.75 Cage identification.**

* * * * *

(a) *Tagging.* Before offloading, all cages that contain surfclams or ocean quahogs must be tagged with tags acquired annually under paragraph (b) of this section. A tag must be fixed on or as near as possible to the upper crossbar of the cage for every 60 ft3 (1,700 L), or portion thereof, of the cage. A tag or tags must not be removed until the cage is emptied by the processor, at which time the processor must promptly remove and retain the tag(s) for 60 days beyond the end of the

calendar year, unless otherwise directed by authorized law enforcement agents.

* * * * *

[FR Doc. E7–3776 Filed 3–2–07; 8:45 am]

**BILLING CODE 3510–22–S**

# Notices

Federal Register
Vol. 72, No. 42
Monday, March 5, 2007

This section of the FEDERAL REGISTER contains documents other than rules or proposed rules that are applicable to the public. Notices of hearings and investigations, committee meetings, agency decisions and rulings, delegations of authority, filing of petitions and applications and agency statements of organization and functions are examples of documents appearing in this section.

## DEPARTMENT OF AGRICULTURE

### Forest Service

### Information Collection; Pre-Decisional Objection Process for Hazardous Fuel Reduction Projects Authorized by the Healthy Forest Restoration Act of 2003

**AGENCY:** Forest Service, USDA.

**ACTION:** Notice; request for comment.

**SUMMARY:** In accordance with the Paperwork Reduction Act of 1995, the Forest Service is seeking comments from all interested individuals and organizations on the reinstatement of a currently approved information collection, OMB 0596–0172—Pre-Decisional Objection Process for Hazardous Fuel Reduction Projects Authorized by the Healthy Forest Restoration Act of 2003.

**DATES:** Comments must be received in writing on or before May 4, 2007, to be assured of consideration. Comments received after that date will be considered to the extent practicable.

**ADDRESSES:** Comments concerning this notice should be addressed to Forest Service, USDA, Assistant Director for Appeals and Litigation, Ecosystem Management Coordination, Mail Stop 1104, 1400 Independence Avenue SW., Washington, DC 20250–1104. Comments also may be submitted via facsimile to (202) 205–1012 or by e-mail to: *dbeighley@fs.fed.us.*

The public may inspect comments received at the Ecosystem Management Coordination Office, 201 14th St. SW., Washington, DC, during normal business hours. Visitors are encouraged to call ahead to (202) 205–0895 to facilitate entry into the building.

**FOR FURTHER INFORMATION CONTACT:** Deb Beighley, Ecosystem Management Coordination, at (202) 205–1277 or e-mail to: *dbeighley@fs.fed.us.* Individuals who use telecommunication devices for the deaf (TDD) may call the Federal Relay Service (FRS) at 1–800–877–8339, 24 hours a day, every day of the year, including holidays.

**SUPPLEMENTARY INFORMATION:**

*Title:* Pre-Decisional Objection Process for Hazardous Fuel Reduction Projects Authorized by the Healthy Forest Restoration Act of 2003.

*OMB Number:* 0596–0172.

*Expiration Date of Approval:* August 31, 2007.

*Type of Request:* Renewal, without changes, of currently approved collection.

*Abstract:* The information required by Section 105 of the Healthy Forests Restoration Act of 2003 is the minimum necessary for an individual or organization to object to an authorized hazardous fuel reduction project on Forest Service land. An objector must provide, in writing, their name, mailing address, and phone number (if available); the name of the project for which they are filing an objection, as well as the name and title of the Responsible Official and the Forest Service unit on which the proposed project will be implemented; and the specific changes in the authorized project they seek, as well as the rationale for those changes. The Reviewing Officer must review the objection(s) and relevant information and then respond to the objector(s) in writing. No forms are associated with this information collection.

*Estimate of Annual Burden:* 8 hours per respondent.

*Type of Respondents:* Interested and affected individuals, organizations, and governmental units who participate in the planning process for projects on National Forest System lands.

*Estimated Annual Number of Respondents:* 121.

*Estimated Annual Number of Responses per Respondent:* 1.

*Estimated Total Annual Burden on Respondents:* 968 hours.

#### Comment is Invited

*Comment is invited on:* (1) Whether this collection of information is necessary for the stated purposes and the proper performance of the functions of the agency, including whether the information will have practical or scientific utility; (2) the accuracy of the agency's estimate of the burden of the collection of information, including the validity of the methodology and assumptions used; (3) ways to enhance the quality, utility, and clarity of the information to be collected; and (4) ways to minimize the burden of the collection of information on respondents, including the use of automated, electronic, mechanical, or other technological collection techniques or other forms of information technology.

#### Use of Comments

All comments received in response to this notice, including names and addresses when provided, will be a matter of public record. Comments will be summarized and included in the request for Office of Management and Budget approval.

Dated: February 23, 2007.

**Gloria Manning,**

*Associate Deputy Chief, National Forest System.*

[FR Doc. E7–3729 Filed 3–2–07; 8:45 am]

BILLING CODE 3410–11–P

## DEPARTMENT OF AGRICULTURE

### Forest Service

### Bridger-Teton National Forest—Big Piney Ranger District, WY; Eagle Prospect

**AGENCY:** Forest Service, USDA.

**ACTION:** Revised Notice of Intent to Prepare an Environmental Impact Statement.

**SUMMARY:** This notice revises an earlier Notice of Intent (NOI) to prepare an environmental impact statement (EIS) on an exploratory oil and gas drilling proposal submitted by Plains Exploration & Production Company (PXP). The Forest Service is providing this Revised Notice of Intent because the U.S. Department of the Interior Bureau of Land Management (BLM) has been designated as a cooperating agency and the BLM Wyoming State Director has been added as an additional responsible official for the ongoing EIS for the Eagle Prospect Exploratory Wells Project, Sublette County, Wyoming. The State of Wyoming also has been designated as a cooperating agency.

**DATES:** The Draft EIS (DEIS) is expected to be filed with the Environmental Protection Agency (EPA) and be available for public comment in March 2007 and the Final EIS (FEIS) is expected to be available in August 2007.

**FOR FURTHER INFORMATION CONTACT:** Greg Clark, District Ranger, at the Big Piney Ranger District at 307–276–3375.

**SUPPLEMENTARY INFORMATION:** This revised notice updates the original NOI, which appeared Wednesday January 11, 2006, in the **Federal Register** (71 FR pages 1731–1732). There will be no additional scoping on this revised NOI. The next opportunity to comment will be on the DEIS (see discussion below).

Comments on the DEIS will be requested during the 45 day comment period following the Notice of Availability (NOA), anticipated to be published in the **Federal Register** in March 2007. The publication date of the NOA in the **Federal Register** is the exclusive means for calculating the comment period for a proposed action documented in a DEIS. Those wishing to comment should not rely on dates or timeframe information provided by any other source.

Reviewers should provide the Forest Service with their comments during the review period of the DEIS. This will enable the Forest Service to analyze and respond to the comments at one time and to use information acquired in the preparation of the FEIS, thus avoiding undue delay in the decisionmaking process. Reviewers have an obligation to structure their participation in the National Environmental Policy Act process so that it is meaningful and alerts the agency to the reviewers' position and contentions. *Vermont Yankee Nuclear Power Corp.* v. *NRDC, 435 U.S. 519, 533 (1978).* Environmental objections that could have been raised at the draft stage may be waived if not raised until after completion of the FEIS. *City of Angoon* v. *Hodel (9th Circuit, 1986)* and *Wisconsin Heritages, Inc.* v. *Harris, 490 F. Supp. 1334, 1338 (E.D. Wis. 1980).* Comments on the DEIS should be specific and should address the adequacy of the Statement and the merits of the alternatives discussed (40 CFR 1503.3).

**Responsible Officials**

Greg Clark, District Ranger; Big Piney Ranger District; P.O. Box 218; Big Piney, Wyoming 83113.

Robert A. Bennett, State Director, BLM—Wyoming State Office 5353 Yellowstone (P.O. Box 1828), Cheyenne, Wyoming 82009.

**Nature of Decision To Be Made**

The decisions, which will be based on the EIS analysis, will be to make the final decisions on the Applications for Permits to Drill (APDs) and Surface Use Plans of Operation (SUPOs) submitted by PXP for the Eagle # 1–8, Eagle # 2–8, and Eagle # 3–8 wells, and to specify the access route, project design criteria, best management practices, and agency requirements that will be included as conditions of approval for these wells. The decisions made will include reasonable measures identified as being needed during the EIS analysis in addition to any prescribed in the Forest Plan for the Bridger-Teton National Forest.

Dated: February 26, 2007.

**Greg W. Clark,**

*District Ranger, Big Piney Ranger District, Bridger-Teton National Forest.*

[FR Doc. 07–987 Filed 3–2–07; 8:45am]

BILLING CODE 3410–11–M

## CHEMICAL SAFETY AND HAZARD INVESTIGATION BOARD

### Sunshine Act Meeting

In connection with its investigation into the cause of an explosion and fire which occurred at BP's Texas City refinery on March 23, 2005, the United States Chemical Safety and Hazard Investigation Board (CSB) announces that it will convene a public meeting on March 20, 2007 starting at 6 p.m. at The Nessler Center, Wings of Heritage Room, 2010 5th Avenue North, Texas City, Texas 77590. At the meeting, CSB staff will present to the Board the results of their investigation into this incident. There will be a public comment period after the investigators' presentation.

At approximately 1:20 p.m. on Wednesday, March 23rd, a series of explosions occurred at the BP Texas City refinery during the restarting of an isomerization unit processing flammable hydrocarbons. Fifteen workers were killed and about 180 others were injured. Many of the victims were in or around work trailers located near a blowdown drum and stack that were open to the atmosphere. The explosions occurred when a distillation tower flooded with hydrocarbons and was over pressurized, resulting in a release of flammable hydrocarbons from the blowdown stack and a subsequent vapor cloud explosion. After the staff presentation, the Board will allow time for public comment. Following the conclusion of the public comment period, the Board will consider whether the preliminary facts presented necessitate any recommendations prior to the final completion of the Board's investigative report.

At the meeting, CSB staff will present the Board with the results of their investigation into this incident, including a discussion of key findings, root and contributing causes, and proposed recommendations. The CSB staff presentation will focus on four key safety issues: safety culture, regulatory oversight, process safety metrics, and human factors.

After the staff presentation, the Board will ask for public comments. Following the conclusion of the public comment period, the Board will consider whether to approve the final report and recommendations. All staff presentations are preliminary and are solely intended to allow the Board to consider in a public forum the issues and factors involved in this case. No factual analyses, conclusions or findings of the staff should be considered final. Only after the Board has considered the staff presentation and approved the staff report will there be an approved final record of this incident investigation.

The meeting will be open to the public, and there is no fee or pre-registration required. Please notify CSB if a translator or interpreter is needed, at least 5 business days prior to the public meeting. For more information, please contact the Chemical Safety and Hazard Investigation Board at (202) 261–7600, or visit our Web site at: *http://www.csb.gov.*

**Christopher W. Warner,**

*General Counsel.*

[FR Doc. 07–1010 Filed 3–1–07; 2:10 pm]

BILLING CODE 6350–01–P

## DEPARTMENT OF COMMERCE

### Submission for OMB Review; Comment Request

DOC will submit to the Office of Management and Budget (OMB) for clearance the following proposal for collection of information under the provisions of the Paperwork Reduction Act (44 U.S.C. Chapter 35).

*Agency:* U.S. Census Bureau.

*Title:* Construction Progress Reporting Surveys.

*Form Number(s):* C–700, Private Construction Projects; C–700 (SL), State and Local Governments Projects; C–700 (R), Multi-Family Residential Projects.

*Agency Approval Number:* 0607–0153.

*Type of Request:* Extension of a currently approved collection.

*Burden:* 50,700 hours.

*Number of Respondents:* 19,500.

*Average Hours Per Response:* 15 minutes for mailed responses; 5 minutes for telephone responses.

*Needs and Uses:* The U.S. Census Bureau is requesting an extension of a currently approved collection for forms C–700, Private Construction Projects; C–

700 (R), Multi-Family Residential Projects; and C–700 (SL), State and Local Governments Projects. These forms are used to conduct the Construction Progress Reporting Surveys (CPRS) to collect information on the dollar value of construction put in place on building projects under construction by private companies or individuals, private multi-family residential buildings, and on building projects under construction by state and local governments. The Census Bureau uses the information collected on these forms to publish estimates of the monthly value of construction put in place: (1) For nonresidential projects owned by private companies or individuals; (2) for projects owned by state and local agencies; and (3) for multi-family residential building projects owned by private companies or individuals. Statistics from CPRS become part of the monthly ''Value of Construction Put in Place'' series that is used extensively by the Federal Government in making policy decisions and become part of the gross domestic product (GDP). The private sector uses the statistics for market analysis and other research. Construction now accounts for more than eight percent of GDP.

The C–700 is used to collect data on industrial and manufacturing plants, office buildings, retail buildings, service establishments, religious buildings, schools, universities, hospitals, clinics, and miscellaneous buildings. The C–700 (SL) is used to collect data on public schools, courthouses, prisons, hospitals, civic centers, highways, bridges, sewer systems, and water systems. The C–700 (R) is used to collect data on residential buildings and apartment projects with two or more housing units. Published statistics are used by all levels of government to evaluate economic policy, to measure progress toward national goals, to make policy decisions, and to formulate legislation. For example, Bureau of Economic Analysis (BEA) staff use data to develop the construction components of gross private domestic investment in the gross domestic product. The Federal Reserve Board and the Department of the Treasury use the value in place data to predict the gross domestic product, which is presented to the Board of Governors and has an impact on monetary policy. Private businesses and trade organizations use the data for estimating the demand for building materials and to schedule production, distribution and sales efforts.

*Frequency:* Monthly.

*Respondent's Obligation:* Voluntary.

*Legal Authority:* Title 13 U.S.C. 182.

*OMB Desk Officer:* Brian Harris-Kojetin, (202) 395–7314.

Copies of the above information collection proposal can be obtained by calling or writing Diana Hynek, Departmental Paperwork Clearance Officer, (202) 482–0266, Department of Commerce, Room 6625, 14th and Constitution Avenue, NW., Washington, DC 20230 (or via the Internet at *dHynek@doc.gov*).

Written comments and recommendations for the proposed information collection should be sent within 30 days of publication of this notice to Brian Harris-Kojetin, OMB Desk Officer either by fax (202–395–7245) or e-mail (*bharrisk@omb.eop.gov*).

Dated: February 27, 2007.

**Gwellnar Banks,**

*Management Analyst, Office of the Chief Information Officer.*

[FR Doc. E7–3732 Filed 3–2–07; 8:45 am]

BILLING CODE 3510–07–P

## DEPARTMENT OF COMMERCE

### Submission for OMB Review; Comment Request

DOC will submit to the Office of Management and Budget (OMB) for clearance the following proposal for collection of information under the provisions of the Paperwork Reduction Act (44 U.S.C. Chapter 35).

*Agency:* U.S. Census Bureau.

*Title:* 2007 Economic Census Covering the Manufacturing Sector.

*Form Number(s):* MA–10000, MC–31000 thru MC–33000.

*Agency Approval Number:* None.

*Type of Request:* New collection.

*Burden:* 833,100 hours in FY 2008.

*Number of Respondents:* 205,000.

*Average Hours Per Response:* 4 hours and 4 minutes.

*Needs and Uses:* The 2007 Economic Census Covering the Manufacturing Sector will use a mail canvass, supplemented by data from federal administrative records, to measure the economic activity of approximately 345,000 establishments classified in the North American Industry Classification System (NAICS).

The manufacturing sector comprises establishments engaged in the mechanical, physical, or chemical transformation of materials, substances, or components into new products. The assembling of component parts of manufactured products is considered manufacturing, except in cases where the activity is appropriately classified in Sector 23, Construction. The economic census will produce basic statistics by industry for number of establishments, payroll, employment, value of shipments, value added, capital expenditures, depreciation, materials consumed, selected purchased services, electric energy used and inventories held. This information collection is part of the 2007 Economic Census, which is required by law under Title 13, United States Code (U.S.C.).

The economic census is the primary source of facts about the structure and functioning of the Nation's economy and features unique industry and geographic detail. Economic census statistics serve as part of the framework for the national accounts and provide essential information for government, business, and the general public. The Federal Government (*i.e.*, Bureau of Economic Analysis (BEA), Bureau of Labor Statistics (BLS)) uses information from the economic census as an important part of the framework for the national income and product accounts, input-output tables, economic indexes, and other composite measures that serve as the factual basis for economic policy-making, planning, and program administration. Further, the census provides sampling frames and benchmarks for current surveys which track short-term economic trends, serve as economic indicators, and contribute critical source data for current estimates of the gross domestic product. State and local governments rely on the economic census as a unique source of comprehensive economic statistics for small geographic areas for use in policy-making, planning, and program administration. Finally, industry, business, academia, and the general public use information from the economic census for evaluating markets, preparing business plans, making business decisions, developing economic models and forecasts, conducting economic research, and establishing benchmarks for their own sample surveys.

If the economic census was not conducted, the Federal Government would lose vital source data and benchmarks for the national accounts, input-output tables, and other composite measures of economic activity, causing a substantial degradation in the quality of these important statistics. Further, the government would lose critical benchmarks for current sample-based economic surveys and an essential source of detailed, comprehensive economic information for use in policy-making, planning, and program administration.

*Affected Public:* Business or other for-profit organizations.

*Frequency:* One time.

*Respondent's Obligation:* Mandatory.

*Legal Authority:* Title 13 U.S.C. 131 & 224.

*OMB Desk Officer:* Brian Harris-Kojetin, (202) 395–7314.

Copies of the above information collection proposal can be obtained by calling or writing Diana Hynek, Departmental Paperwork Clearance Officer, (202) 482–0266, Department of Commerce, Room 6625, 14th and Constitution Avenue, NW., Washington, DC 20230 (or via the Internet at *dHynek@doc.gov*).

Written comments and recommendations for the proposed information collection should be sent within 30 days of publication of this notice to Brian Harris-Kojetin, OMB Desk Officer either by fax (202–395–7245) or e-mail (*bharrisk@omb.eop.gov*).

Dated: February 27, 2007.

**Gwellnar Banks,**

*Management Analyst, Office of the Chief Information Officer.*

[FR Doc. E7–3733 Filed 3–2–07; 8:45 am]

**BILLING CODE 3510–07–P**

## DEPARTMENT OF COMMERCE

### Submission for OMB Review; Comment Request

DOC will submit to the Office of Management and Budget (OMB) for clearance the following proposal for collection of information under the provisions of the Paperwork Reduction Act (44 U.S.C. Chapter 35).

*Agency:* U.S. Census Bureau.

*Title:* 2007 Economic Census Covering the Mining Sector.

*Form Number(s):* MI–21101, MI–21102, MI–21171, MI–21201, MI–21202, MI–21203, MI–21204, MI–21205, MI–21206, MI–21207, MI–21208, MI–21209, MI–21210, MI–21211, MI–21271, MI–21301, MI–21302, MI–21351, MI–21352.

*Agency Approval Number:* None.

*Type of Request:* New collection.

*Burden:* 63,540 hours in FY 2008.

*Number of Respondents:* 15,000.

*Average Hours Per Response:* 4 hours and 15 minutes.

*Needs and Uses:* The 2007 Economic Census covering the Mining Sector will use a mail canvass, supplemented by data from federal administrative records, to measure the economic activity of approximately 25,000 mining establishments classified in the North American Industry Classification System (NAICS).

The mining sector of the economic census distinguishes two basic activities: Mine operation and mining support activities. The economic census will produce basic statistics for number of establishments, shipments, payroll, employment, detailed supplies and fuels consumed, depreciable assets, inventories, and capital expenditures. It also will yield a variety of subject statistics, including shipments by product line, type of operation, size of establishments and other industry-specific measures.

This information collection is part of the 2007 Economic Census, which is required by law under Title 13, United States Code (U.S.C.).

The economic census is the primary source of facts about the structure and functioning of the Nation's economy and features unique industry and geographic detail. Economic census statistics serve as part of the framework for the national accounts and provides essential information for government, industry, business, and the general public. The Federal Government uses information from the economic census as an important part of the framework for the national accounts, input-output measures, key economic indexes, and other estimates that serve as the factual basis for economic policy-making, planning, and program administration. State and local governments rely on the economic census as a unique source of comprehensive economic statistics for small geographical areas for use in policy-making, planning, and program administration. Finally, industry, business, and the general public use data from the economic census for economic forecasts, market research, benchmarks for their own sample-based surveys, and business and financial decision making.

If the economic census was not conducted, the Federal Government would lose vital source data and benchmarks for the national accounts, input-output tables, and other composite measures of economic activity, causing substantial degradation in the quality of these important statistics. Further, the government would lose critical benchmarks for current, sample-based economic surveys and an essential source of detailed, comprehensive economic information for use in policy-making and program administration.

*Affected Public:* Business or other for-profit organizations.

*Frequency:* One time.

*Respondent's Obligation:* Mandatory.

*Legal Authority:* Title 13 U.S.C., 131 & 224.

*OMB Desk Officer:* Brian Harris-Kojetin, (202) 395–7314.

Copies of the above information collection proposal can be obtained by calling or writing Diana Hynek, Departmental Paperwork Clearance Officer, (202) 482–0266, Department of Commerce, Room 6625, 14th and Constitution Avenue, NW., Washington, DC 20230 (or via the Internet at *dHynek@doc.gov*).

Written comments and recommendations for the proposed information collection should be sent within 30 days of publication of this notice to Brian Harris-Kojetin, OMB Desk Officer either by fax (202–395–7245) or e-mail (*bharrisk@omb.eop.gov*).

Dated: February 27, 2007.

**Gwellnar Banks,**

*Management Analyst, Office of the Chief Information Officer.*

[FR Doc. E7–3735 Filed 3–2–07; 8:45 am]

**BILLING CODE 3510–07–P**

## DEPARTMENT OF COMMERCE

### Bureau of Industry and Security

### Reporting and Recordkeeping Requirements Under the Wassenaar Arrangement

**ACTION:** Extension of a currently approved collection; Request for Comments.

**SUMMARY:** The Department of Commerce, as part of its continuing effort to reduce paperwork and respondent burden, invites the general public and other Federal agencies to take this opportunity to comment on proposed and/or continuing information collections, as required by the Paperwork Reduction Act of 1995, Pub. L. 104–13 (44 U.S.C. 3506(c)(2)(A)).

**DATES:** Written comments must be submitted on or before May 4, 2007.

**ADDRESSES:** Direct all written comments to Diana Hynek, Departmental Paperwork Clearance Officer, Department of Commerce, Room 6625, 14th and Constitution Avenue, NW., Washington, DC 20230, (or via the Internet at *dHynek@doc.gov*.).

**FOR FURTHER INFORMATION CONTACT:** Requests for additional information or copies of the information collection instrument(s) and instructions should be directed to Larry Hall, BIS ICB Liaison, Department of Commerce, Room 6622, 14th & Constitution Avenue, NW., Washington, DC 20230.

**SUPPLEMENTARY INFORMATION:**

### I. Abstract

This collection of information is required semi-annually from all exporters of certain items specified in § 743.1 of the Export Administration Regulations controlled for national security reasons on the Commerce

Control List and exported under certain License Exceptions.

**II. Method of Collection**

Submitted on forms or electronically.

**III. Data**

*OMB Number:* 0694–0106.

*Form Number:* None.

*Type of Review:* Extension of a currently approved collection.

*Affected Public:* Business or other for-profit organizations.

*Estimated Number of Respondents:* 35.

*Estimated Time Per Response:* 1 minute to 30 minutes.

*Estimated Total Annual Burden Hours:* 24.

*Estimated Total Annual Cost:* No start-up capital expenditures.

**IV. Request for Comments**

Comments are invited on: (a) Whether the proposed collection of information is necessary for the proper performance of the functions of the agency, including whether the information shall have practical utility; (b) the accuracy of the agency's estimate of the burden (including hours and cost) of the proposed collection of information; (c) ways to enhance the quality, utility, and clarity of the information to be collected; and (d) ways to minimize the burden of the collection of information on respondents, including through the use of automated collection techniques or other forms of information technology. In addition, the public is encouraged to provide suggestions on how to reduce and/or consolidate the current frequency of reporting.

Comments submitted in response to this notice will be summarized and/or included in the request for OMB approval of this information collection; they will also become a matter of public record.

Dated: February 27, 2007.

**Gwellnar Banks,**

*Management Analyst, Office of the Chief Information Officer.*

[FR Doc. E7–3734 Filed 3–2–07; 8:45 am]

BILLING CODE 3510–DT–P

## DEPARTMENT OF COMMERCE

### International Trade Administration

**[A–570–898]**

### Chlorinated Isocyanurates from the People's Republic of China: Extension of Time Limit for Preliminary Results of Antidumping Duty Administrative Review

**AGENCY:** Import Administration, International Trade Administration, Department of Commerce.

**EFFECTIVE DATE:** March 5, 2007.

**FOR FURTHER INFORMATION CONTACT:** Katharine Huang or Charles Riggle, AD/CVD Operations, Office 8, Import Administration, International Trade Administration, U.S. Department of Commerce, 14th Street and Constitution Avenue, NW, Washington, DC 20230; telephone (202) 482–1271 or (202) 482–0650, respectively.

**Background**

On July 27, 2006, the Department of Commerce (the ''Department'') published a notice of initiation of administrative review of the antidumping duty order on chlorinated isocyanurates from the People's Republic of China, covering the period December 16, 2004, through May 31, 2006. *See Initiation of Antidumping and Countervailing Duty Administrative Reviews and Request for Revocation in Part*, 71 FR 42626 (July 27, 2006). The preliminary results are currently due no later than March 2, 2007.

**Statutory Time Limits**

Section 751(a)(3)(A) of the Tariff Act of 1930, as amended (the Act), requires the Department to make a preliminary determination within 245 days after the last day of the anniversary month of an order or finding for which a review is requested and a final determination within 120 days after the date on which the preliminary determination is published. However, if it is not practicable to complete the review within these time periods, section 751(a)(3)(A) of the Act allows the Department to extend the 245-day time limit for the preliminary determination to a maximum of 365 days and the time limit for the final determination to 180 days (or 300 days if the Department does not extend the time limit for the preliminary determination) from the date of publication of the preliminary determination.

**Extension of Time Limit for Preliminary Results of Review**

We determine that it is not practicable to complete the preliminary results of this review within the original time limit. Additional time is required to analyze complicated issues raised by the parties regarding possible affiliation. Therefore, the Department is extending the time limit for completion of the preliminary results by 60 days until no later than May 1, 2007. We intend to issue the final results no later than 120 days after the publication of the preliminary results notice.

This extension is in accordance with section 751(a)(3)(A) of the Act.

Dated: February 20, 2007.

**Stephen J. Claeys,**

*Deputy Assistant Secretaryfor Import Administration.*

[FR Doc. E7–3791 Filed 3–2–07; 8:45 am]

BILLING CODE 3510–DS–S

## DEPARTMENT OF COMMERCE

### International Trade Administration

**[A–549–812]**

### Furfuryl Alcohol from Thailand; Final Results of the Second Sunset Review of the Antidumping Duty Order and Revocation of the Order

**AGENCY:** Import Administration, International Trade Administration, Department of Commerce.

**SUMMARY:** The Department of Commerce (''the Department'') has conducted a full sunset review of the antidumping duty order on furfuryl alcohol from Thailand pursuant to section 751(c) of the Tariff Act of 1930, as amended (''the Act''). As a result of this review, the Department finds that revocation of the antidumping duty order would not likely lead to the continuation or recurrence of dumping. Therefore, pursuant to section 751(d)(2) of the Act and 19 CFR 351.222(i)(1)(ii), the Department is revoking the antidumping duty order on furfuryl alcohol from Thailand.

**EFFECTIVE DATE:** March 5, 2007.

**FOR FURTHER INFORMATION CONTACT:** Audrey R. Twyman, Damian Felton, or Brandon Farlander, AD/CVD Operations, Office 1, Import Administration, International Trade Administration, U.S. Department of Commerce, 14th Street & Constitution Avenue, NW., Washington, DC, 20230; telephone: 202–482–3534, 202–482–0133, and 202–482–0182, respectively.

**SUPPLEMENTARY INFORMATION:**

**Background**

On October 26, 2006, the Department published a notice of preliminary results of the full sunset review of the antidumping duty order on furfuryl alcohol from Thailand pursuant to

section 751(c) of the Act. *See Furfuryl Alcohol from Thailand; Preliminary Results of the Second Sunset Review of the Antidumping Duty Order*, 71 FR 62583 (October 26, 2006) (''*Preliminary Results*'').

The Department conducted a verification of the data provided by Indorama Chemicals (Thailand) Ltd. (''Indorama'') on December 19 and 20, 2006. The verification report was issued on January 3, 2007.

We provided interested parties an opportunity to comment on our preliminary results. The Department received a case brief from Penn Specialty Chemicals, Inc. (''Penn'') on January 16, 2007, and a rebuttal brief from Indorama on January 22, 2007. A hearing was not held because none was requested.

**Scope of the Order**

The merchandise covered by this order is furfuryl alcohol (C4H3OCH2OH). Furfuryl alcohol is a primary alcohol, and is colorless or pale yellow in appearance. It is used in the manufacture of resins and as a wetting agent and solvent for coating resins, nitrocellulose, cellulose acetate, and other soluble dyes. The product subject to this order is classifiable under subheading 2932.13.00 of the Harmonized Tariff Schedule of the United States (''HTSUS''). Although the HTSUS subheading is provided for convenience and customs purposes, our written description of the scope of this proceeding is dispositive.

**Analysis of Comments Received**

All issues raised in this sunset review are addressed in the ''Issues and Decision Memorandum for the Second Sunset Review of the Antidumping Duty Order on Furfuryl Alcohol from Thailand; Final Results,'' to David M. Spooner, Assistant Secretary for Import Administration, dated February 27, 2007 (''Decision Memo''), which is hereby adopted by this notice. The issues discussed in the Decision Memo include the likelihood of continuation or recurrence of dumping and the magnitude of the margin likely to prevail if the antidumping duty order were revoked. Parties can find a complete discussion of all issues raised in this sunset review and the corresponding recommendations in this public memorandum, which is on file in room B–099 of the main Department building. In addition, a complete version of the Decision Memo can be accessed directly on the Web at http://ia.ita.doc.gov/frn/index.html. The paper copy and electronic version of the Decision Memo are identical in content.

**Final Results of Review and Revocation**

The Department determines that revocation of the antidumping duty order on furfuryl alcohol from Thailand is not likely to lead to a continuation or recurrence of dumping. Consequently, the Department is revoking the antidumping duty order on furfuryl alcohol from Thailand, pursuant to section 751(d)(2) of the Act and 19 CFR 351.222(i)(1)(ii). Consistent with 19 CFR 351.222(i)(2)(i) and section 751(c)(6)(A)(iii) of the Act, this revocation will be effective May 4, 2006, the fifth anniversary of the date of publication in the **Federal Register** of the notice of continuation. *See Notice of Continuation of Antidumping Duty Orders: Furfuryl Alcohol from the People's Republic of China and Thailand*, 66 FR 22519 (May 4, 2001).

We will notify the U.S. International Trade Commission (''ITC'') of our final results. We do not intend, however, to report a rate to the ITC as a determination by the Department that revocation of the order would not lead to a continuation or recurrence of dumping will result in revocation of the order.[1] Moreover, the ITC has already ruled in this proceeding.

The Department will instruct U.S. Customs and Border Protection to liquidate without regard to dumping duties entries of the subject merchandise entered or withdrawn from warehouse for consumption on or after May 4, 2006, (the effective date), and to discontinue collection of cash deposits of antidumping duties.

This sunset review and notice are in accordance with sections 751(c), 752, and 777(i)(1) of the Act. This notice serves as a final reminder to parties subject to administrative protective order (''APO'') of their responsibility concerning the disposition of proprietary material disclosed under APO in accordance with 19 CFR 351.305. Timely notification of return/destruction of APO materials or conversion to judicial protective order is hereby requested. Failure to comply with the regulations and the terms of an APO is a sanctionable violation.

Dated: February 27, 2007.

**David M. Spooner,**

*Assistant Secretaryfor Import Administration.*

[FR Doc. E7–3792 Filed 3–2–07; 8:45 am]

**BILLING CODE 3510–DS–S**

[1]Contrary to the ITC's statement that the order on furfuryl alcohol from Thailand remains in place, the Department's sunset determination in this proceeding will, in fact, result in the order being revoked. *See* ITC News Release 06-093 (September 1, 2006) concerning Inv. Nos. 731-TA-703 and 705 (Second Review).

## DEPARTMENT OF COMMERCE

### International Trade Administration

**[A–588–837]**

### Large Newspaper Printing Presses and Components Thereof, Whether Assembled or Unassembled, from Japan: Discontinuation of Reconsideration of Sunset Review

**AGENCY:** Import Administration, International Trade Administration, Department of Commerce.

**EFFECTIVE DATE:** February 24, 2007.

**FOR FURTHER INFORMATION CONTACT:** David Goldberger, Kate Johnson, or Rebecca Trainor, AD/CVD Operations, Import Administration, International Trade Administration, U.S. Department of Commerce, 14th Street & Constitution Avenue, NW., Washington, DC 20230; telephone: 202–482–4136, 202–482–4929, or 202–482–4007, respectively.

**Discontinuation of Reconsideration of Sunset Review**

On April 13, 2006, the Department of Commerce (the Department) published the notice of initiation notice of the reconsideration of the sunset review of the antidumping duty order on large newspaper printing presses and components thereof, whether assembled or unassembled (LNPP), from Japan. *See Large Newspaper Printing Presses and Components Thereof, Whether Assembled or Unassembled, From Japan: Reconsideration of Sunset Review*, 71 FR 19164 (April 13, 2006). This review was initiated to reconsider the sunset review of the antidumping duty order on LNPP from Japan, which resulted in the revocation of that antidumping duty order. *See, Large Newspaper Printing Presses and Components Thereof, Whether Assembled or Unassembled, from Japan (A–588–837) and Germany (A–428–821): Notice of Final Results of Five-year Sunset Reviews and Revocation of Antidumping Duty Orders*, 67 FR 8522 (February 25, 2002). The Department published its preliminary results in the reconsideration of sunset review on November 6, 2006. *See Large Newspaper Printing Presses and Components Thereof, Whether Assembled or Unassembled, from Japan: Preliminary Results of Reconsideration of Sunset Review*, 71 FR 64927 (November 6, 2006).

On January 24, 2007, the Court of International Trade (CIT) issued its decision in *Tokyo Kikai Seisakusho, Ltd. v. United States*, Consol. Court No. 06–00078, Slip. Op. 07–12 (January 24, 2007), and ordered the Department to

''discontinue any action in regard to a reconsideration'' of the sunset review. Tokyo Kikai Seisakusho, Ltd. v. United States. See FULL CITE Slip Op. 07–12. In accordance with that is decision, the Department is discontinuing action with respect toits reconsideration of the sunset review.

Dated: February 26, 2007.

**David M. Spooner,**

*Assistant Secretaryfor Import Administration.*

[FR Doc. E7–3788 Filed 3–2–07; 8:45 am]

BILLING CODE 3510–DS–S

## DEPARTMENT OF COMMERCE

### International Trade Administration

**[A–570–881]**

### Malleable Cast Iron Pipe Fittings from the People's Republic of China: Notice of Rescission of Antidumping Duty Administrative Review

**AGENCY:** Import Administration, International Trade Administration, Department of Commerce.

**EFFECTIVE DATE:** March 5, 2007.

**FOR FURTHER INFORMATION CONTACT:** Jennifer Moats, AD/CVD Operations, Office 8, Import Administration, Room 1870, International Trade Administration, U.S. Department of Commerce, 14th Street and Constitution Avenue, NW, Washington, DC 20230; telephone: (202) 482–5047.

**SUPPLEMENTARY INFORMATION:**

#### Background

On December 1, 2006, the Department of Commerce (''the Department'') published a notice of opportunity to request an administrative review of the antidumping duty order on malleable cast iron pipe fittings from the People's Republic of China (''PRC''). *See Antidumping or Countervailing Duty Order, Finding, or Suspended Investigation: Opportunity to Request Administrative Review*, 71 FR 69543 (December 1, 2006). On December 15, 2006, Beijing Sai Lin Ke Hardware Co., Ltd. (''SLK'') requested that the Department conduct a review of its sales and entries of subject merchandise into the United States. On January 3, 2007, Mueller Comercial de México, D. de R.L. de C.V. (''Mueller'') requested that the Department conduct an administrative review of its sales and entries of subject merchandise into the United States. On January 4, 2007, SLK withdrew its request for review. On January 31, 2007, Mueller withdrew its request for an administrative review.[1] No other parties requested a review. On February 2, 2007, the Department published the *Initiation Notice* covering Mueller, and issued an antidumping duty questionnaire to Mueller for the administrative review of the antidumping duty order on malleable cast iron pipe fittings from the PRC with respect to Mueller for the period December 1, 2005, through November 30, 2006.

#### Rescission of Review

The Department's regulations at 19 CFR 351.213(d)(1) provide that the Department will rescind an administrative review if the party that requested the review withdraws its request for review within 90 days of the date of publication of the notice of initiation of the requested review, or withdraws its request at a later date if the Department determines that it is reasonable to extend the time limit for withdrawing the request. Mueller timely withdrew its request before the 90-day deadline. Therefore, we are rescinding this review of the antidumping duty order on malleable cast iron pipe fittings from the PRC covering the period December 1, 2005, through November 30, 2006. The Department intends to issue assessment instructions to U.S. Customs and Border Protection 15 days after of publication of this rescission.

#### Notification Regarding APOs

This notice also serves as a reminder to parties subject to administrative protective orders (''APO'') of their responsibility concerning the return or destruction of proprietary information disclosed under APO in accordance with 19 CFR 351.305, which continues to govern business proprietary information in this segment of the proceeding. Timely written notification of the return/destruction of APO materials or conversion to judicial protective order is hereby requested. Failure to comply with the regulations and terms of an APO is a violation which is subject to sanction.

This notice is issued and published in accordance with section 777(i)(1) of the Tariff Act of 1930, as amended, and 19 CFR 351.213(d)(4).

[1] Although Mueller submitted its withdrawal of its request for review before the *Initiation of Antidumping and Countervailing Duty Administrative Reviews and Requests for Revocation in Part*, 72 FR 5005 (February 2, 2007) (''*Initiation Notice*''), published in the **Federal Register**, Mueller's withdrawal was submitted after the *Initiation Notice* had been transmitted to the **Federal Register** for publication.

Dated: February 27, 2007.

**Stephen J. Claeys,**

*Deputy Assistant Secretaryfor Import Administration.*

[FR Doc. E7–3797 Filed 3–2–07; 8:45 am]

BILLING CODE 3510–DS–S

## DEPARTMENT OF COMMERCE

### International Trade Administration

**[A–570–886]**

### Polyethylene Retail Carrier Bags from the People's Republic of China: Notice of Extension of Time Limit for the Final Results of the Antidumping Duty Administrative Review

**AGENCY:** Import Administration, International Trade Administration, Department of Commerce.

**EFFECTIVE DATE:** March 5, 2007.

**FOR FURTHER INFORMATION CONTACT:** Laurel LaCivita or Matthew Quigley, AD/CVD Operations, Office 8, Import Administration, International Trade Administration, U.S. Department of Commerce, 14th Street and Constitution Avenue, NW, Washington, DC 20230; telephone: (202) 482–4243 or (202) 482–4551, respectively.

**SUPPLEMENTARY INFORMATION:**

#### Background

On September 28, 2005, the Department of Commerce (''the Department'') published in the **Federal Register** a notice of initiation of the antidumping duty administrative review of Polyethylene Retail Carrier Bags (''PRCBs'') from the People's Republic of China (''PRC'') for the period January 26, 2004, through July 31, 2005. *See Initiation of Antidumping and Countervailing Duty Administrative Reviews and Request for Revocation in Part*, 70 FR 56631 (September 28, 2005). On September 13, 2006, the Department published the preliminary results. *See Polyethylene Retail Carrier Bags from the People's Republic of China: Preliminary Results of Antidumping Duty Administrative Review*, 71 FR 54021 (September 13, 2006) (''*Preliminary Results*''). On January 10, 2007, the Department extended the time period for completion of the final results of this review. *See Polyethylene Retail Carrier Bags from the People's Republic of China: Notice of Extension of Time Limit for the Final Results of the Antidumping Duty Administrative Review*, 72 FR 1216 (January 10, 2007). On February 15, 2007, the Department extended the time period for completion of the final results of this review a second time. *See Polyethylene Retail*

*Carrier Bags from the People's Republic of China: Notice of Extension of Time Limit for the Final Results of the Antidumping Duty Administrative Review*, 72 FR 7417 (February 15, 2007). The final results are currently due by February 26, 2007.

### Extension of Time Limit for Final Results of Review

Pursuant to section 751(a)(3)(A) of the Tariff Act of 1930, as amended (''the Act''), the Department shall make a final determination in an administrative review of an antidumping duty order within 120 days after the date on which the preliminary determination is published. The Act further provides, however, that the Department may extend that 120-day period to 180 days if it determines it is not practicable to complete the review within the foregoing time period.

The Department finds that it is not practicable to complete the final results of the administrative review of PRCBs from the PRC by February 26, 2007, due to complex issues related to the calculation of surrogate financial ratios. Therefore, in accordance with section 751(a)(3)(A) of the Act, the Department is extending the time period for completion of the final results of this review to 180 days after publication of the *Preliminary Results*. Therefore, the final results are now due no later than March 12, 2007.

This notice is published in accordance with sections 751(a)(3)(A) and 777(i) of the Act.

Dated: February 26, 2007.

**Stephen J. Claeys,**

*Deputy Assistant Secretaryfor Import Administration.*

[FR Doc. E7–3790 Filed 3–2–07; 8:45 am]

**BILLING CODE 3510–DS–S**

---

## DEPARTMENT OF COMMERCE

## International Trade Administration

**[A–533–810]**

## Stainless Steel Bar from India: Notice of Extension of Time Limit for the Preliminary Results of the 2006 New Shipper Review

**AGENCY:** Import Administration, International Trade Administration, Commerce.

**EFFECTIVE DATE:** March 5, 2007.

**FOR FURTHER INFORMATION CONTACT:** Devta Ohri or Brandon Farlander, AD/CVD Operations, Office 1, Import Administration, International Trade Administration, U.S. Department of Commerce, 14th Street and Constitution Avenue, NW, Washington, DC 20230, telephone (202) 482–3853 or (202) 482–0182, respectively.

**SUPPLEMENTARY INFORMATION:**

### Statutory Time Limits

Section 751(a)(2)(B)(iv) of the Tariff Act of 1930, as amended (the Act) and section 351.214(i)(1) of the Department of Commerce's (Department) regulations require the Department to issue the preliminary results of a new shipper review within 180 days after the date on which the new shipper review was initiated, and the final results of review within 90 days after the date on which the preliminary results were issued. However, if the Department determines that the issues are extraordinarily complicated, section 751(a)(2)(B)(iv) of the Act and section 351.214(i)(2) of the Department's regulations allow the Department to extend the deadline for the preliminary results to up to 300 days after the date on which the new shipper review was initiated.

### Background

On September 26, 2006, the Department published a notice of initiation of a new shipper review of the antidumping duty order on stainless steel bar from India for Ambica Steels Limited (Ambica), covering the period February 1, 2006 through July 31, 2006. *See Stainless Steel Bar from India: Notice of Initiation of Antidumping Duty New Shipper Review*, 71 FR 56105 (September 26, 2006). On January 24, 2007, the Department initiated a cost investigation of Ambica. The preliminary results for this review are currently due no later than March 19, 2007.

### Extension of Time Limits for Preliminary Results

Pursuant to section 751(a)(2)(B)(iv) of the Act, the Department may extend the deadline for completion of the preliminary results of a new shipper review if it determines that the case is extraordinarily complicated. Because the Department needs additional time to evaluate Ambica's recently submitted cost information, examine sales issues, such as product grade hierarchy, and to issue additional supplemental questionnaires, the Department has determined that this review is extraordinarily complicated, and the preliminary results of this new shipper review cannot be completed within the statutory time limit of 180 days. Therefore, in accordance with section 751(a)(2)(B)(iv) of the Act and section 351.214(i)(2) of the regulations, the Department is extending the time limit for the completion of the preliminary results by 120 days until no later than July 17, 2007.

This notice is published pursuant to sections 751(a)(2)(B)(iv) and 777(i)(1) of the Act.

Dated: February 27, 2007.

**Stephen J. Claeys,**

*Deputy Assistant Secretaryfor Import Administration.*

[FR Doc. E7–3796 Filed 3–2–07; 8:45 am]

**BILLING CODE 3510–DS–S**

---

## DEPARTMENT OF COMMERCE

## International Trade Administration

**[A–823–809]**

## Steel Concrete Reinforcing Bars from Ukraine; Final Results of the Sunset Review of Antidumping Duty Order

**AGENCY:** Import Administration, International Trade Administration, Department of Commerce

**SUMMARY:** On November 27, 2006, the Department of Commerce (''the Department'') published a notice of preliminary results of the full sunset review of the antidumping duty order on steel concrete reinforcing bars (''rebar'') from Ukraine pursuant to section 751(c) of the Tariff Act of 1930, as amended (''the Act''). We provided interested parties an opportunity to comment on our preliminary results. We did not receive comments from either domestic or respondent interested parties. As a result of this review, the Department finds that revocation of this order would be likely to lead to continuation or recurrence of dumping at the levels indicated in the ''Final Results of Review'' section of this notice.

**EFFECTIVE DATE:** March 5, 2007.

**FOR FURTHER INFORMATION CONTACT:** Audrey R. Twyman or Brandon Farlander, AD/CVD Operations, Office 1, Import Administration, International Trade Administration, U.S. Department of Commerce, 14th Street & Constitution Avenue, NW, Washington, DC, 20230; telephone: 202–482–3534 and 202–482–0182, respectively.

**SUPPLEMENTARY INFORMATION:**

### Background

On November 27, 2006, the Department published in the **Federal Register** a notice of preliminary results of the full sunset review of the antidumping duty order on rebar from Ukraine, pursuant to section 751(c) of the Act. *See Steel Concrete Reinforcing Bars from Ukraine; Preliminary Results* of the Sunset Review of Antidumping Duty Order, 71 FR 68543 (November 27,

2006) (''*Preliminary Results*''). In our Preliminary Results, we determined that revocation of the order would likely result in continuation or recurrence of dumping with a margin of 41.69 percent for the all others rate, including Mittal Steel Kryviy Rih and Krivorozhstal Steel Works. We did not receive a case brief on behalf of either domestic or respondent interested parties within the deadline specified in 19 CFR 351.309(c)(1)(i).

**Scope of the Order**

The product covered by this order is all steel concrete reinforcing bars sold in straight lengths, currently classifiable in the Harmonized Tariff Schedule of the United States (''HTSUS'') under item numbers 7214.20.00, 7228.30.8050, 7222.11.0050, 7222.30.0000, 7228.60.6000, 7228.20.1000, or any other tariff item number. Specifically excluded are plain rounds (*i.e.*, non–deformed or smooth bars) and rebar that has been further processed through bending or coating.

HTSUS subheadings are provided for convenience and customs purposes. The written description of the scope of the order is dispositive.

**Analysis of Comments Received**

The Department did not receive case briefs from either domestic or respondent interested parties. Therefore, we have not made any changes to our *Preliminary Results*.

**Final Results of Review**

We determine that revocation of the antidumping duty order on rebar from Ukraine would be likely to lead to continuation or recurrence of dumping at the following weighted–average margin:

| Manufacturers/Producers/Exporters | Weighted–Average Margin (Percent) |
|---|---|
| All Others Rate, including Mittal Steel Kryviy Rih and ''Krivorozhstal'' Steel Works[1] | 41.69 |

[1] As of February 1, 2006, Ukraine graduated to market economy status. *See Final Results of Inquiry Into Ukraine's Status as a Non-Market Economy Country*, 71 FR 9520 (February 24, 2006). As a result, the Ukraine wide rate is now the All Others rate. Mittal Steel is considered part of the all others rate because a successor-in-interest determination has not been made. *See, e.g., Cut-to-Length Carbon Steel Plate from Belgium, Brazil, Finland, Germany, Mexico, Poland, Romania, Spain, Sweden, and the United Kingdom and Carbon Steel Plate from Taiwan; Second Five-Year (Sunset) Reviews of Antidumping Duty Orders and Antidumping Finding; Final Results*, 71 FR 11577, 11579 (March 8, 2006) (explaining that Duferco is subject to the all others rate because the Department had not yet conducted a changed circumstances review to determine the successor-in-interest to Forges de Clabecq, S.A.).

This notice serves as the only reminder to parties subject to administrative protective order (''APO'') of their responsibility concerning the disposition of proprietary information disclosed under APO in accordance with 19 CFR 351.305. Timely notification of return/destruction of APO materials or conversion to judicial protective order is hereby requested. Failure to comply with the regulations and the terms of an APO is a sanctionable violation.

We are issuing and publishing these results in accordance with sections 751(c), 752(c), and 777(i)(1) of the Act.

Dated: February 27, 2007.

**David M. Spooner,**

*Assistant Secretaryfor Import Administration.*

[FR Doc. E7–3799 Filed 3–2–07; 8:45 am]

BILLING CODE 3510–DS–S

## DEPARTMENT OF COMMERCE

### International Trade Administration

## DEPARTMENT OF THE INTERIOR

**[Docket No.990813222–0035–03]**

**RIN 0625–AA55**

### Allocation of Duty–Exemptions for Calendar Year 2007Among Watch Producers Located in the United States Virgin Islands

**AGENCY:** Import Administration, International Trade Administration, Department of Commerce; Office of Insular Affairs, Department of the Interior.

**ACTION:** Notice.

**SUMMARY:** This action allocates calendar year 2007 duty exemptions for watch producers located in the Virgin Islands pursuant to Pub. L. 97–446, as amended by Pub. L. 103–465, Pub. L 106–36 and Pub. L. 108–429 (''the Act'').

**FOR FURTHER INFORMATION CONTACT:** Faye Robinson, (202) 482–3526.

**SUPPLEMENTARY INFORMATION:** Pursuant to the Act, the Departments of the Interior and Commerce (the Departments) share responsibility for the allocation of duty exemptions among watch assembly firms in the United States insular possessions and the Northern Mariana Islands. In accordance with Section 303.3(a) of the regulations (15 CFR 303.3(a)), the total quantity of duty- free insular watches and watch movements for calendar year 2007 is 1,866,000 units for the Virgin Islands (65 F.R. 8048, February 17, 2000).

The criteria for the calculation of the calendar year 2007 duty–exemption allocations among insular watch producers are set forth in Section 303.14 of the regulations (15 CFR 303.14).

The Departments have verified and adjusted the data submitted on application form ITA–334P by Virgin Islands producers and inspected their current operations in accordance with Section 303.5 of the regulations (15 CFR 303.5).

In calendar year 2006 the Virgin Islands watch assembly firms shipped 268,430 watches and watch movements into the customs territory of the United States under the Act. The dollar amount of creditable corporate income taxes paid by Virgin Islands producers during calendar year 2006 plus the creditable wages paid by the industry during calendar year 2006 to residents of the territory was $2,071,548.

There are no producers in Guam, American Samoa or the Northern Mariana Islands.

The calendar year 2007 Virgin Islands annual allocations, based on the data verified by the Departments, are as follows:

| Name of Firm | Annual Allocation |
|---|---|
| Belair Quartz, Inc. | 500,000 |
| Hampden Watch Co., Inc. | 200,000 |
| Goldex Inc. | 50,000 |
| Tropex, Inc. | 300,000 |

The balance of the units allocated to the Virgin Islands is available for new entrants into the program or producers who request a supplement to their allocation.

**Joseph A. Spetrini,**

*DAS for Policy and Negotiations, Import Administration, Department of Commerce.*

**Nikolao Pula,**

*Director, Office of Insular Affairs, Department of the Interior.*

[FR Doc. 07–994 Filed 3–2–07; 8:45 am]

BILLING CODE 3510–DS–P and 4310–93–S

## DEPARTMENT OF COMMERCE

### National Oceanic and Atmospheric Administration

**[I.D. 022207C]**

### Fisheries of the Caribbean, Gulf of Mexico, and South Atlantic; Amendment 30 to the Fishery Management Plan for the Reef Fish Resources of the Gulf of Mexico

**AGENCY:** National Marine Fisheries Service (NMFS), National Oceanic and Atmospheric Administration (NOAA), Commerce.

**ACTION:** Notice; intent to prepare a draft environmental impact statement (DEIS); scoping meetings; request for comments.

**SUMMARY:** NMFS, Southeast Region, in collaboration with the Gulf of Mexico Fishery Management Council (Council) intends to prepare a DEIS to describe and analyze management alternatives to be included in an amendment to the Fishery Management Plan (FMP) for the Reef Fish Resources of the Gulf of Mexico. These alternatives will consider measures to reduce gag, red grouper, greater amberjack, and gray triggerfish fishing mortality in the reef fish fishery, and to set status determination criteria for gag, greater amberjack, gray triggerfish, and other species in the fishery management unit. The purpose of this notice of intent is to solicit public comments on the scope of issues to be addressed in the DEIS.

**DATES:** Written comments on the scope of issues to be addressed in the DEIS must be received by NMFS by April 4, 2007. Seven scoping meetings will be held in March 2007. See **SUPPLEMENTARY INFORMATION** for specific dates and times.

**ADDRESSES:** Written comments on the scope of the DEIS, suggested alternatives and potential impacts, and requests for additional information on the amendment should be sent to Peter Hood, NMFS, Southeast Regional Office, 263 13th Avenue South, St. Petersburg, FL 33701–5511; telephone (727) 824–5305; fax (727) 824–5308. Comments may also be sent by email to *peter.Hood@noaa.gov*.

Requests for information packets and for sign language interpretation or other auxiliary aids should be directed to the Gulf of Mexico Fishery Management Council, 2203 North Lois Avenue, Suite 1100, Tampa, FL 33607; telephone: 813–348–1630; fax: 813–348–1711. Requests may also be sent by email to *steven.atran@gulfcouncil.org*.

**FOR FURTHER INFORMATION CONTACT:** Peter Hood; phone: (727) 824–5305; fax: (727) 824–5308; email: peter.hood@noaa.gov.

**SUPPLEMENTARY INFORMATION:** Recent stock assessments of three reef fish stocks and ongoing assessment of the red grouper stock indicate revisions may be needed in these stocks' management. Gag were declared to be undergoing overfishing in October 2006 based on the results of a stock assessment; thus it is necessary for NMFS in collaboration with the Council to set a total allowable catch (TAC) and management measures to end overfishing, and to set some management thresholds and targets to ensure compliance with the Sustainable Fisheries Act of 1996 (SFA).

Red grouper are under a rebuilding plan as a result of being overfished in 1997. In 2002, a stock assessment concluded that red grouper were still undergoing overfishing, though no longer in an overfished condition. A new stock assessment has been completed that re-evaluates the status of the red grouper stock and will be reviewed by NMFS and the Council soon.

Greater amberjack have been under a rebuilding plan since 2003. However, a new stock assessment completed in 2006 concluded the stock is not recovering as projected. It remains overfished and is undergoing overfishing. Therefore, management measures are needed to end overfishing and realign harvest with the rebuilding plan to continue stock recovery.

Gray triggerfish were declared to be undergoing overfishing in October 2006 based on the most recent stock assessment. The overfished status could not be determined due to uncertainty about the stock-recruitment relationship; however, stock biomass trends in the assessment suggested the stock could be approaching an overfished condition. In addition, NMFS and the Council will set management thresholds and targets for gray triggerfish to ensure compliance with the SFA, including setting TAC and management measures to end overfishing.

All reef fish species in the fishery management unit have overfishing definitions, which were developed in a generic amendment to the Council's FMPs. To ensure compliance with the SFA, NMFS and the Council will set optimum yield and overfished definitions where necessary for the remaining species in the management unit that do not have these definitions.

NMFS in collaboration with the Council will develop a DEIS to describe and analyze management alternatives to reduce overfishing and to establish SFA status criteria for these four stocks. Those alternatives include, but are not limited to: a ''no action'' alternative regarding each fishery; alternatives to set TAC consistent with each species' stock status and rebuilding plan (if required); constraint of harvest to each stocks' TAC through measures such as size limits, bag limits, gear restrictions, season closures, and area closures; and establishment of status determination criteria for gag and gray triggerfish.

In accordance with NOAA's Administrative Order 216–6, Section 5.02(c), Scoping Process, NMFS in collaboration with the Council has identified preliminary environmental issues as a means to initiate discussion for scoping purposes only. These preliminary issues may not represent the full range of issues that eventually will be evaluated in the EIS.

NMFS, in collaboration with the Council, has scheduled the following seven scoping meetings to provide the opportunity for additional public input:

1. Monday, March 19, 2007, Imperial Palace Hotel, 850 Bayview Avenue, Biloxi, MS 39530, phone: 228–432–3216;
2. Monday, March 19, 2007, City of Orange Beach Parks & Recreation, 27235 Canal Road, Orange Beach, AL 36561, phone: 251–981–6028;
3. Tuesday, March 20, 2007, Four Points Sheraton Hotel, New Orleans Airport, 6401 Veterans Memorial Boulevard, Metairie, LA 70003, phone: 504–885–5700;
4. Tuesday, March 20, 2007, Edgewater Beach Resort, 11212 Front Beach Road, Panama City, FL 32407, phone: 800–331–6338;
5. Wednesday, March 21, 2007, Hilton Galveston Island Resort, 5400 Seawall Boulevard, Galveston, TX 77550, phone: 409–744–1500;
6. Wednesday, March 21, 2007, Best Western Hotel, 6400 Dudley Drive, Naples, FL 34105, phone: 239–643–6655;
7. Thursday, March 22, 2007, City of Madeira Beach, 300 Municipal Drive, Madeira Beach, FL 33708, phone: 727–391–9951.

Copies of an information packet will be available at the meetings and are available prior to the meetings from the Council (see **ADDRESSES**).

All scoping meetings will begin at 7 p.m. The meetings will be physically accessible to people with disabilities. Requests for sign language interpretation or other auxiliary aids should be directed to the Council (see **ADDRESSES**).

Once the DEIS associated with Amendment 30 is completed, it will be filed with the Environmental Protection

Agency (EPA). The EPA will publish a notice of availability of the DEIS for public comment in the **Federal Register**. The DEIS will have a 45–day comment period. This procedure is pursuant to regulations issued by the Council on Environmental Quality (CEQ) for implementing the procedural provisions of the National Environmental Policy Act (NEPA; 40 CFR parts 1500–1508) and to NOAA's Administrative Order 216–6 regarding NOAA's compliance with NEPA and the CEQ regulations.

NMFS will consider public comments received on the DEIS in developing the final environmental impact statement (FEIS) and before adopting final management measures for the amendment. NMFS will submit both the final amendment and the supporting FEIS to the Secretary of Commerce (Secretary) for review as per the Magnuson-Stevens Fishery Conservation and Management Act.

NMFS will announce, through a notice published in the **Federal Register**, the availability of the final amendment for public review during the Department of Commerce Secretarial review period. During Secretarial review, NMFS will also file the FEIS with the EPA, and the EPA will publish a notice of availability for the FEIS in the **Federal Register**. This comment period will be concurrent with the Secretarial review period and will end prior to final agency action to approve, disapprove, or partially approve the amendment.

NMFS will announce, through a notice published in the **Federal Register**, all public comment periods on the final amendment, its proposed implementing regulations, and the availability of its associated FEIS. NMFS will consider all public comments received during the Secretarial review period, whether they are on the final amendment, the proposed regulations, or the FEIS, prior to final agency action.

**Authority:** 16 U.S.C. 1801 *et seq.*

Dated: February 27, 2007.

**James P. Burgess,**

*Acting Director, Office of Sustainable Fisheries, National Marine Fisheries Service.*

[FR Doc. E7–3777 Filed 3–2–07; 8:45 am]

**BILLING CODE 3510–22–S**

## DEPARTMENT OF COMMERCE

### National Oceanic and Atmospheric Administration

**[I.D. 022707D]**

### Gulf of Mexico Fishery Management Council; Scoping Meetings

**AGENCY:** National Marine Fisheries Service (NMFS), National Oceanic and Atmospheric Administration (NOAA), Commerce.

**ACTION:** Notice of scoping meetings.

**SUMMARY:** The Gulf of Mexico Fishery Management Council (Council) will convene scoping meetings to solicit comments on Reef Fish Amendment 30.

**DATES:** The scoping meetings will be held from March 19 - 22, 2007 at 7 locations throughout the Gulf of Mexico. For specific dates and times, see **SUPPLEMENTARY INFORMATION**.

**ADDRESSES:** The scoping meetings will be held in the following locations: Orange Beach, AL, Panama City, Naples and Madeira Beach, FL, Biloxi, MS, New Orleans, LA and Galveston, TX. For specific locations, see **SUPPLEMENTARY INFORMATION**.

*Council address*: Gulf of Mexico Fishery Management Council, 2203 North Lois Avenue, Suite 1100, Tampa, FL 33607.

**FOR FURTHER INFORMATION CONTACT:** Steven Atran, Population Dynamics Statistician, Gulf of Mexico Fishery Management Council; telephone: (813) 348–1630.

**SUPPLEMENTARY INFORMATION:** The Gulf of Mexico Fishery Management Council (Council) has scheduled a series of scoping meetings to solicit public comment on a scoping document to define issues to be addressed in a new Amendment 30 to the Reef Fish Fishery Management Plan. The issues deal with possible changes to the management of gag, red grouper, greater amberjack, and gray triggerfish. Recent stock assessments completed under the Southeast Data, Assessment and Review (SEDAR) program, indicate that management changes may be warranted.

Gag were declared by NMFS to be undergoing overfishing based on the results of a 2006 stock assessment (SEDAR 10). A fishing mortality rate reduction of 10 to 34 percent is needed to end overfishing under the current overfishing definition. In addition, management targets and thresholds consistent with the Sustainable Fisheries Act need to be reviewed and adopted.

Red grouper were initially determined to be overfished and undergoing overfishing as of 1997. A rebuilding plan combined with a strong recruitment year class that occurred in 2000 has resulted in a stock that is currently above its maximum sustainable yield (MSY) biomass threshold and slightly above to its optimum yield (OY) target level. As a result, a 15% increase in red grouper TAC and management measures to achieve that increase can be implemented while still maintaining OY.

Greater amberjack were found to be overfished and undergoing overfishing as of 1998 based on a 2000 stock assessment. A rebuilding plan was adopted in 2003. A 2006 stock assessment (SEDAR 9) found that the greater amberjack stock continues to be overfished and undergoing overfishing, and is not meeting its rebuilding targets. Consequently, the rebuilding plan needs to be revised. Reductions of from 11 to 30 percent are needed depending upon the revisions made to the rebuilding plan.

Gray triggerfish were found to be undergoing overfishing based on a 2006 stock assessment (SEDAR 9). A 35 percent reduction in landings is necessary to end overfishing. In addition, management targets and thresholds consistent with SFA need to be reviewed and adopted.

Scoping meetings are part of the initial phase of preparing a plan amendment. Their purpose is to identify issues and a reasonable range, or scope, of alternatives to address those issues. Such alternatives could include changes in total allowable catch (TAC), size limits, bag limits, quotas, closed seasons or areas, or other measures to reduce fishing mortality and dead discards.

The scoping meetings will begin at 7 p.m. and conclude at the end of public testimony or no later than 10 p.m. at each of the following locations:

*Monday, March 19, 2007*, IP Hotel, 850 Bayview Avenue, Biloxi, MS 39530; telephone: (228) 432–3216;

*Monday, March 19, 2007*, City of Orange Beach Parks and Recreational Center, 27235 Canal Road, Orange Beach, AL 36561; telephone: (251) 981–6028;

*Tuesday, March 20, 2007*, Four Points Sheraton New Orleans Airport, 6401 Veterans Memorial Blvd., Metairie, LA 70003; telephone: (504) 885–5700;

*Tuesday, March 20, 2007*, Edgewater Beach Resort, 11212 Front Beach Road, Panama City, FL 32407; telephone: (800) 331–6338;

*Wednesday, March 21, 2007*, Hilton Galveston, 5400 Seawall Boulevard, Galveston, TX 77550; telephone: (409) 744–1500;

*Wednesday, March 21, 2007*, Best Western, 6400 Dudley Drive, Naples, FL 34105; telephone: (239) 643–6655; and

*Thursday, March 22, 2007*, City of Madeira Beach, 300 Municipal Drive, Madeira Beach, FL 33708; telephone: (727) 391–9951;

Copies of the scoping documents and related materials can be obtained by calling the Council office at (813) 348–1630.

### Special Accommodations

These meetings are physically accessible to people with disabilities. Requests for sign language interpretation or other auxiliary aids should be directed to Tina Trezza at the Council (see **ADDRESSES**) at least 5 working days prior to the meeting.

Dated: February 28, 2007.

**Tracey L. Thompson,**

*Acting Director, Office of Sustainable Fisheries, National Marine Fisheries Service.*

[FR Doc. E7–3738 Filed 3–2–07; 8:45 am]

**BILLING CODE 3510–22–S**

---

## DEPARTMENT OF COMMERCE

### National Oceanic and Atmospheric Administration

**[I.D. 022607D]**

### Advisory Committee to the U.S. Section to the International Commission for the Conservation of Atlantic Tunas (ICCAT); Spring Species Working Group Meeting

**AGENCY:** National Marine Fisheries Service (NMFS), National Oceanic and Atmospheric Administration (NOAA), Commerce.

**ACTION:** Notice of public meeting.

**SUMMARY:** The Advisory Committee (Committee) to the U.S. Section to the International Commission for the Conservation of Atlantic Tunas (ICCAT) announces its spring meeting with its Species Working Group Technical Advisors on April 2–3, 2007. The Committee will meet to discuss matters relating to ICCAT, including the results from the 2006 ICCAT meeting; the U.S. implementation of ICCAT decisions; the 2007 ICCAT and NMFS research and monitoring activities; the 2007 ICCAT activities; the Atlantic Tunas Convention Act-required consultation on the identification of countries that are diminishing the effectiveness of ICCAT; the results of the meetings of the Committee's Species Working Groups; and other matters relating to the international management of ICCAT species.

**DATES:** The open sessions of the Committee meeting will be held on April 2, 2007, from 8:45 a.m. to 3 p.m. and on April 3, 2006, from 8:30 a.m. to 9:15 a.m. and from 11 a.m. to 3:30 p.m. Closed sessions will be held on April 2, 2007, from 3 p.m. to approximately 6 p.m. and on April 3, 2007, from 9:15 a.m. to 11 a.m. and from 3:30 p.m. to 5 p.m.

**ADDRESSES:** The meeting will be held at the Hilton Hotel Washington-Silver Spring, 8727 Colesville Road, Silver Spring, MD 20910, telephone: 301–589–5200.

**FOR FURTHER INFORMATION CONTACT:** Kelly Denit at (301) 713–2276.

**SUPPLEMENTARY INFORMATION:** The Advisory Committee to the U.S. Section to ICCAT will meet in open session to receive and discuss information on (1) the 2006 ICCAT meeting results and U.S. implementation of ICCAT decisions; (2) 2007 ICCAT and NMFS research and monitoring activities; (3) 2007 ICCAT activities; (4) the Atlantic Tunas Convention Act-required consultation on the identification of countries that are diminishing the effectiveness of ICCAT; (5) the results of the meetings of the Committee's Species Working Groups; and (6) other matters relating to the international management of ICCAT species. The public will have access to the open sessions of the meeting, but there will be no opportunity for public comment.

The Committee will meet in its Species Working Groups for a portion of the afternoon of April 2, 2007, and of the morning of April 3, 2007. These sessions are not open to the public, but the results of the species working group discussions will be reported to the full Advisory Committee during the Committee's morning and afternoon open session on April 3, 2007. The Committee may also go into executive session on the afternoon of April 3, 2007, to discuss sensitive information relating to upcoming intersessional meetings of ICCAT. This session would also be closed to the public.

### Special Accommodations

The meeting location is physically accessible to people with disabilities. Requests for sign language interpretation or other auxiliary aids should be directed to Kelly Denit at (301) 713–2276 at least 5 days prior to the meeting date.

Dated: February 28, 2007.

**William T. Hogarth,**

*Assistant Administrator for Fisheries, National Marine Fisheries Service.*

[FR Doc. E7–3778 Filed 3–2–07; 8:45 am]

**BILLING CODE 3510–22–S**

## DEPARTMENT OF COMMERCE

### National Oceanic and Atmospheric Administration

**[I.D. 022707E]**

### New England Fishery Management Council; Public Meetings

**AGENCY:** National Marine Fisheries Service (NMFS), National Oceanic and Atmospheric Administration (NOAA), Commerce.

**ACTION:** Notice of public meetings.

**SUMMARY:** The New England Fishery Management Council (Council) is scheduling a public meeting of its Scallop Advisory Panels and its Scallop Committee in March, 2007, to consider actions affecting New England fisheries in the exclusive economic zone (EEZ). Recommendations from these groups will be brought to the full Council for formal consideration and action, if appropriate

**DATES:** These meetings will be held on Monday, March 19, 2007, at 8 a.m. and Tuesday, March 20, 2007, at 8:30 a.m.

**ADDRESSES:** These meetings will be held at the Radisson Airport Hotel, 2081 Post Road, Warwick, RI 02886; telephone: (401) 739–3000; fax: (401) 732–9309.

*Council address*: New England Fishery Management Council, 50 Water Street, Mill 2, Newburyport, MA 01950.

**FOR FURTHER INFORMATION CONTACT:** Paul J. Howard, Executive Director, New England Fishery Management Council; telephone: (978) 465–0492.

**SUPPLEMENTARY INFORMATION:** The panel's schedule and agenda for the meetings are as follows:

*1. Monday, March 19, 2007; General Category Scallop Advisory Panel Meeting, 8 a.m. - 11 a.m. and a Joint General Category and Scallop Advisory Panel Meeting, 12 p.m. - 5 p.m.*

In the morning, the General Category advisors will meet individually to review the Draft Supplemental Environmental Impact Statement (DSEIS) for Amendment 11 to the Scallop Fishery Management Plan (FMP) and make final recommendations for the Scallop Committee to consider as preferred alternatives related to limited entry qualification alternatives. In the afternoon, both scallop advisory panels will meet jointly to further review the DSEIS for Amendment 11 to the Scallop FMP and make final recommendations for the Scallop Committee to consider as preferred alternatives related to all other measures in the document. If time permits, the advisors will discuss and develop potential alternatives to

improve the industry- funded observer set-aside program for the Scallop Committee to consider for inclusion in Framework 19 to the Scallop FMP. The advisors may consider other topics at their discretion.

*2. Tuesday, March 20, 2007; Scallop Committee Meeting, 8:30 a.m.*

The committee will review the DSEIS for Amendment 11 and consider input from the Scallop Plan Development Team and advisors concerning final recommendations for preferred alternatives for the Council to consider at the April 2007 Council meeting. If time permits, the Committee will consider further development of alternatives for Framework 19 to the Scallop FMP. Framework 19 is a biennial framework to set management measures for fishing years 2008 and 2009. The Committee may consider other topics at their discretion.

Although non-emergency issues not contained in this agenda may come before these groups for discussion, those issues may not be the subject of formal action during this meeting. Action will be restricted to those issues specifically listed in this notice and any issues arising after publication of this notice that require emergency action under section 305(c) of the Magnuson-Stevens Act, provided the public has been notified of the Council's intent to take final action to address the emergency.

**Special Accommodations**

These meetings are physically accessible to people with disabilities. Requests for sign language interpretation or other auxiliary aids should be directed to Paul J. Howard, Executive Director, at (978) 465–0492, at least 5 days prior to the meeting date.

**Authority:** 16 U.S.C. 1801 *et seq.*

Dated: February 28, 2007.

**Tracey L. Thompson,**

*Acting Director, Office of Sustainable Fisheries Service, National Marine Fisheries Service.*

[FR Doc. E7–3787 Filed 3–2–07; 8:45 am]

BILLING CODE 3510–22–S

## DEPARTMENT OF COMMERCE

### National Oceanic and Atmospheric Administration

### Publication of North American Datum of 1983 State Plane Coordinates in Feet in Ohio

**AGENCY:** National Geodetic Survey (NGS), National Ocean Service (NOS), National Oceanic and Atmospheric Administration.

**ACTION:** Notice.

**SUMMARY:** The National Geodetic Survey (NGS) will publish North American Datum of 1983 (NAD 83) State Plane Coordinate (SPC) grid values in both meters and U.S. Survey Feet (1 ft = 1200/3937 m) in Ohio, for all well defined geodetic survey control monuments maintained by NGS in the National Spatial Reference System (NSRS) and computed for various geodetic positioning utilities. The adoption of this standard is implemented in accordance with NGS policy and a request from the Ohio Department of Transportation, the Professional Land Surveyors of Ohio, the Ohio Geographically Referenced Information Program, and the County Engineers Association of Ohio.

**DATES:** Individuals or organizations wishing to submit comments on the Publication of North american Datum of 1983 State Plane Coordinates in feet in Ohio, should do so by April 4, 2007.

**ADDRESSES:** Written comments should be sent to the attention of David Doyle, Chief Geodetic Surveyor, Office of the National Geodetic Survey, National Ocean Service (N/NGS2), 1315 East-West Highway, Silver Spring, Maryland 20910, fax 301–713–4324, or via e-mail *Dave.Doyle@noaa.gov.*

**FOR FURTHER INFORMATION CONTACT:** Requests for additional information should be diverted to David Doyle, Chief Geodetic Surveyor, National Geodetic Survey (N/NGS2), 1315 East-West Highway, Silver Spring, MD 20910; Phone (301) 713–3178.

**SUPPLEMENTARY INFORMATION:**

**Abstract**

In 1991, NGS adopted a policy that defines the conditions under which NAD 83 State Plane Coordinates (SPCs) would be published in feet in addition to meters. As outlined in that policy, each state or territory must adopt NAD 83 legislation (typically referenced as Codes, Laws or Statutes), which specifically defines a conversion to either U.S. Survey or International Feet as defined by the U.S. Bureau of Standards in **Federal Register** Notice 59–5442. To date, 48 states have adopted the NAD 83 legislation however, for various reasons, only 33 included a specific definition of the relationship between meters and feet. This lack of uniformity has led to confusion and misuse of SPCs as provided in various NGS products, services and tools, and created errors in mapping, charting and surveying programs in numerous states due to inconsistent coordinate conversions.

Dated: February 26, 2007.

**David B. Zilkoski,**

*Director, Office of National Geodetic Survey, National Ocean Service, National Oceanic and Atmospheric Administration.*

[FR Doc. 07–991 Filed 3–2–07; 8:45 am]

BILLING CODE 3510–JE–M

## DEPARTMENT OF COMMERCE

### National Oceanic and Atmospheric Administration

### Publication of North American Datum of 1983 State Plane Coordinates in Feet in Wyoming

**AGENCY:** National Geodetic Survey (NGS), National Ocean Service (NOS), National Oceanic and Atmospheric Administration.

**ACTION:** Notice.

**SUMMARY:** The National Geodetic Survey (NGS) will publish North American Datum of 1983 (NAD 83) State Plane Coordinate (SPC) grid values in both meters and U.S. Survey Feet (1 ft = 1200/3937 m) in Wyoming, for all well defined geodetic survey control monuments maintained by NGS in the National Spatial Reference System (NSRS) and computed from various geodetic positioning utilities. The adoption of this standard is implemented in accordance with NGS policy and a request from the Wyoming Department of Transportation, and the Professional Land Surveyors of Wyoming.

**DATES:** Individuals or organizations wishing to submit comments on the Publication of North American Datum of 1983 State Plane Coordinates in feet in Wyoming, should do so by April 14, 2007.

**ADDRESSES:** Written comments should be sent to the attention of David Doyle, Chief Geodetic Surveys, Office of the National Geodetic Survey, National Ocean Service (N/NGS2), 1315 East-West Highway, Silver Spring, Maryland 20910, fax 301–713–4324, or via e-mail *Dave.Doyle@noaa.gov.*

**FOR FURTHER INFORMATION CONTACT:** Requests for additional information should be directed to David Doyle, Chief Geodetic Surveyor, National Geodetic Survey (N/NGS2), 1315 East-West Highway, Silver Spring, MD 20910; Phone: (301) 713–3178.

**SUPPLEMENTARY INFORMATION:**

**Abstract**

In 1991, NGS adopted a policy that defines the conditions under which NAD 83 State Plane Coordinates (SPCs) would be published in feet in addition

to meters As outlined in that policy, each state or territory must adopt NAD 83 legislation (typically referenced as Codes, Laws or Statutes), which specifically defines a conversion to either U.S. Survey or International Feet as defined by the U.S. Bureau of Standards in **Federal Register** Notice 59–5442. To date, 48 states have adopted the NAD 83 legislation. However, whoever for various reasons, only 33 included a specific definition of the relationship between meters and feet. This lack of uniformity has led to confusion and misuse of SPCs as provided in various NGS products, services and tools, and created errors in mapping, charting and surveying programs in numerouis states due to inconsistent coordinate conversions.

Dated: February 26, 2007.

**David B. Zilkoski,**

*Director, Office of National Geodetic Survey, National Ocean Service, National Oceanic and Atmospheric Administration.*

[FR Doc. 07–990 Filed 3–2–07; 8:45 am]

BILLING CODE 3510–JE–M

## DEPARTMENT OF DEFENSE

## GENERAL SERVICES ADMINISTRATION

## NATIONAL AERONAUTICS AND SPACE ADMINISTRATION

**[OMB Control No. 9000–0157]**

## Federal Acquisition Regulation; Information Collection; Architect-Engineer Qualifications (SF 330)

**AGENCIES:** Department of Defense (DOD), General Services Administration (GSA), and National Aeronautics and Space Administration (NASA).

**ACTION:** Notice of request for public comments regarding an extension to an existing OMB clearance (9000–0157).

**SUMMARY:** Under the provisions of the Paperwork Reduction Act of 1995 (44 U.S.C. Chapter 35), the Federal Acquisition Regulation (FAR) Secretariat will be submitting to the Office of Management and Budget (OMB) a request to review and approve an extension of a currently approved information collection requirement for the Architect-Engineer Qualifications form (SF 330). A request for public comments was published in the **Federal Register** at 71 FR 67341, on November 21, 2006. No comments were received. The clearance currently expires on March 31, 2007.

Public comments are particularly invited on: Whether this collection of information is necessary for the proper performance of functions of the FAR, and whether it will have practical utility; whether our estimate of the public burden of this collection of information is accurate, and based on valid assumptions and methodology; ways to enhance the quality, utility, and clarity of the information to be collected; and ways in which we can minimize the burden of the collection of information on those who are to respond, through the use of appropriate technological collection techniques or other forms of information technology.

**DATES:** Submit comments on or before April 4, 2007.

**ADDRESSES:** Submit comments, including suggestions for reducing this burden to: FAR Desk Officer, OMB, Room 10102, NEOB, Washington, DC 20503, and a copy to the General Services Administration, FAR Secretariat (VIR), 1800 F Street, NW., Room 4035, Washington, DC 20405.

**FOR FURTHER INFORMATION CONTACT:** Ms. Cecelia L. Davis, Contract Policy Division, GSA, (202) 219–0202.

**SUPPLEMENTARY INFORMATION:**

### A. Purpose

Standard Form 330, Part I is used by all Executive agencies to obtain information from architect-engineer firms interested in a particular project. The information on the form is reviewed by a selection panel composed of professional people and assists the panel in selecting the most qualified architect-engineer firm to perform the specific project. The form is designed to provide a uniform method for architect-engineer firms to submit information on experience, personnel, and capabilities of the architect-engineer firm to perform along with information on the consultants they expect to collaborate with on the specific project.

Standard Form 330, Part II is used by all Executive agencies to obtain general uniform information about a firm's experience in architect-engineering projects. Architect-engineer firms are encouraged to update the form annually. The information obtained on this form is used to determine if a firm should be solicited for architect-engineer projects.

### B. Annual Reporting Burden

Respondents: *5,000.*
Responses Per Respondent: *4.*
Total Responses: *20,000.*
Hours Per Response: *29.*
Total Burden Hours: *580,000.*

*Obtaining Copies of Proposals:* Requesters may obtain a copy of the information collection documents from the General Services Administration, Regulatory Secretariat (VIR), Room 4035, 1800 F Street, NW., Washington, DC 20405, telephone (202) 501–4755. Please cite OMB Control No. 9000–0157, Architect-Engineer Qualifications (SF 330), in all correspondence.

Dated: February 27, 2007.

**Ralph DeStefano,**

*Director, Contract Policy Division.*

[FR Doc. 07–989 Filed 3–2–07; 8:45 am]

BILLING CODE 6820–EP–M

## DEPARTMENT OF DEFENSE

## Department of the Air Force

## United Launch Alliance Industry Day To Inform Industry of the Federal Trade Commission's Consent Order Regarding United Launch Alliance

**AGENCY:** Department of the Air Force, National Security Space Office (NSSO), DOD.

**ACTION:** Notice.

**SUMMARY:** The purpose of the United Launch Alliance (ULA) Industry Day is to inform industry of the Federal Trade Commission's Consent Order regarding ULA and the role of the Compliance Officer to oversee compliance with the Consent Order. The Order is intended to ensure that ULA affords all satellite manufacturers non-discriminatory treatment for launch services and that Lockheed and Boeing, as satellite manufacturers, consider all qualified launch vehicle providers on a non-discriminatory basis. The order also requires firewalls to prevent information from a satellite or other launch vehicle provider from being shared by ULA with its Boeing or Lockheed Martin parent. The role of the Compliance Officer is to oversee compliance with the Consent Order by all three respondents and to investigate any complaint or representation arising in relation to or connected with compliance of this order.

**DATES:** The United Launch Alliance Industry Day will be on April 5, 2007. Attendance to the ULA Industry Day is limited to two (2) representatives per organization. It is required that all attendees register online (*http://www.aero.org/conferences/ula*).

**ADDRESSES:** The meeting location is at The Aerospace Corporation located at 2350 East El Segundo Boulevard, Building A8 Conference Room, El Segundo, California. NSSO welcomes the attendance from members of the general public, but for security reasons all attendees must be United States citizens with a valid photo

identification for admission into The Aerospace Corporation facility.

**FOR FURTHER INFORMATION CONTACT:** Alan L. Adams, 310–336–7476 or DeeDee Madrid, 310–336–7256 or Douglas Brown, 310–416–7704.

**SUPPLEMENTARY INFORMATION:** The Director of National Security Space Office, Office of the Under Secretary to the Air Force, United States Air Force was appointed as the Compliance Officer for Department of Defense in keeping with a decree issued by the United States District court, District of Columbia. The Anti-Trust Division of the Department of Justice brought suit against Northrop-Grumman Corporation to prevent their merger with TRW, Incorporated because it would substantially reduce competition in production of certain satellites. However, the merger was permitted with the agreement that Northrop-Grumman Corporation would comply with certain prescribed behaviors decreed in the Final Judgment. The Compliance Division was established within NSSO to monitor the Northrop-Grumman Corporation's compliance with the Final Judgment on behalf of the Director, who has contracted with the Aerospace Corporation for much of the administrative support.

**Bao-Anh Trinh,**

*Air Force Federal Register Liaison Officer.*

[FR Doc. E7–3771 Filed 3–2–07; 8:45 am]

**BILLING CODE 5000–04–P**

## DEPARTMENT OF EDUCATION

### Office of Special Education and Rehabilitative Services Overview Information; Personnel Development To Improve Services and Results for Children With Disabilities—National Center To Enhance the Training of Personnel Who Share Responsibility for Improving Outcomes for Young Children With Disabilities (National Early Childhood Training Enhancement Center); Notice Inviting Applications for New Awards for Fiscal Year (FY) 2007

*Catalog of Federal Domestic Assistance (CFDA) Number:* 84.325J.

*Dates: Applications Available:* March 5, 2007.

*Deadline for Transmittal of Applications:* April 19, 2007.

*Deadline for Intergovernmental Review:* June 18, 2007.

*Eligible Applicants:* Institutions of higher education (IHEs).

*Estimated Available Funds:* The Administration has requested $90,626,000 for the Personnel Development To Improve Services and Results for Children with Disabilities program for FY 2007, of which we intend to use an estimated $600,000 for the National Early Childhood Training Enhancement Center competition. The actual level of funding, if any, depends on final congressional action. However, we are inviting applications to allow enough time to complete the grant process if Congress appropriates funds for this program.

*Maximum Award:* We will reject any application that proposes a budget exceeding $600,000 for a single budget period of 12 months. The Assistant Secretary for Special Education and Rehabilitative Services may change the maximum amount through a notice published in the **Federal Register**.

*Number of Awards:* 1.

**Note:** The Department is not bound by any estimates in this notice.

*Project Period:* Up to 60 months.

**Full Text of Announcement**

**I. Funding Opportunity Description**

*Purpose of Program:* The purposes of this program are to (1) help address State-identified needs for highly qualified personnel—in special education, related services, early intervention, and regular education—to work with infants or toddlers with disabilities, or children with disabilities; and (2) ensure that those personnel have the skills and knowledge—derived from practices that have been determined through research and experience to be successful—that are needed to serve those children.

*Priority:* In accordance with 34 CFR 75.105(b)(2)(v), this priority is from allowable activities specified in the statute (see sections 662(d) and 681(d) of the Individuals with Disabilities Education Act (IDEA)).

*Absolute Priority:* For FY 2007 this priority is an absolute priority. Under 34 CFR 75.105(c)(3), we consider only applications that meet this priority.

This priority is: *National Early Childhood Training Enhancement Center Background:*

In growing numbers, infants, toddlers, and preschoolers with disabilities are joining their peers without disabilities in natural settings such as childcare centers, Early Head Start and Head Start programs, and public and private preschools. Early interventionists, early childhood educators and special educators, related services providers, and childcare personnel share responsibility for ensuring high quality services and improved outcomes for young children with disabilities. To effectively meet the learning and developmental needs of young children (birth through five) with disabilities, all of these professionals must have knowledge and training in early intervention and early childhood special education, including how to work with families with young children.

Recent data collected by the Office of Special Education Programs (OSEP)-funded Center to Inform Personnel Preparation Policy and Practice in Early Intervention and Preschool Education (*http://www.uconnucedd.org/per_prep_center/index.html*) suggest, however, that programs have serious difficulty finding and hiring personnel with adequate training in early intervention or early childhood special education. In addition, many early care and education personnel do not have the training or knowledge to effectively meet the diverse developmental and educational needs of young children with disabilities in natural environments. In order to meet the early learning and developmental needs of young children more effectively, future and current early childhood personnel must have access to training, educational resources, and materials that reflect evidence-based practice in the fields of early intervention and early childhood education.

In particular, educators and service providers must have: (1) Knowledge of authentic assessment practices such as collecting work samples and observational records, which go beyond assessment of discrete skills to assessments that capture the depth of children's functional abilities within their daily context; (2) training in service coordination and collaborative models of service delivery (this is particularly important as specialized service providers go into natural environments, such as childcare centers and preschools, where staff may not be as knowledgeable about evidence-based practices in working with children with disabilities and their families); and (3) knowledge of interventions and practices that support the development of school readiness skills, particularly in the areas of language, early literacy, and social-emotional development.

To this end, the Assistant Secretary proposes a National Early Childhood Training Enhancement Center for preservice higher education faculty and professional development providers who train early interventionists, early childhood educators and special educators, related services providers, and childcare personnel (the targeted constituent group) to work with infants, toddlers, and preschoolers with disabilities (birth through five) and their families.

*Priority*

The purpose of this priority is to address the need for high quality early childhood personnel and ensure that they have the skills and knowledge to provide collaborative services to meet the developmental and learning needs of infants, toddlers, and preschoolers with disabilities. The goal of this priority is to establish a National Early Childhood Training Enhancement Center (Center) that will identify, develop, and disseminate evidence-based training modules for use by higher education faculty, including community college faculty, and professional development providers who provide ongoing training to the targeted constituent group. The Center must provide technical assistance to programs providing preservice preparation and professional development. The Center also must ensure that these programs have ready access to current materials and resources necessary to support the development of personnel to effectively work within a collaborative model to effectively serve young children with disabilities in natural environments.

The Center must:

(a) *Identify needs.* Identify knowledge and skill enhancement needs of preservice trainees and practicing personnel in the targeted constituent group that are most critical to ensuring that these personnel are well prepared to meet the developmental and learning needs of young children with disabilities. As part of this needs-identification process, the Center must consult with, representatives of professional organizations, faculty from both 4-year and 2-year programs engaged in preservice training, professional development providers, students in training, practicing personnel, families of young children with disabilities, and other stakeholders as appropriate. In addition to the needs identified through this process, the Center must, as appropriate to the roles of the targeted constituents, focus on the following topic areas: Authentic assessment of young children, collaborative service delivery, working with families of young children with disabilities, and knowledge of intervention and practices that support the development of school readiness outcomes for young children with disabilities, especially in the areas of language, early literacy, and social-emotional development.

(b) *Identify appropriate existing resources.* Identify existing resources that represent state of the art, evidence-based knowledge and practice in early intervention and early childhood education, including resources that have been developed through early childhood discretionary grants or contracts funded by OSEP, Head Start and the Child Care Bureau in the Department of Health and Human Services, or other relevant agencies. Additionally, the Center must review and consider for incorporation, into proposed training modules and supporting materials, appropriate early childhood products that have been developed by projects that are part of the OSEP Technical Assistance Network, including State Personnel Development projects, Parent Training and Information Centers, and other OSEP-funded technical assistance projects.

(c) *Identify and develop training modules.* Identify and evaluate existing training modules in the field using established criteria and develop content-rich training modules that address the critical knowledge and skill-enhancement needs identified through activities conducted under paragraph (a); reflect evidence-based practices and scientifically-based research; are designed to maximize adult learning; and integrate existing resources identified in paragraph (b). In addition, the training modules must be designed for ease of integration into existing curricular and experiential opportunities in the targeted preservice preparation programs or structured to be effective resources for providing professional development opportunities for personnel already in practice. Training modules also must be identified and developed in collaboration with content experts, through sub-contractual or consultative arrangements with the Center, to ensure that module content is current and reflects promising and effective practices. Each proposed content expert and module topic must be approved by OSEP prior to the initiation of any development activity.

(d) *Disseminate training modules and provide targeted technical assistance.* Develop and implement mechanisms that will result in broad, effective dissemination and use of training modules identified or developed in paragraph (c). The Center must make all training modules and supporting materials available on a dedicated Web site that is easily searchable by topic and is available for use to everyone at no cost. As an example of previous OSEP-supported work that utilizes this approach, please see the following Web site: *http://iris.peabody.vanderbilt.edu/.* The Center must develop a dissemination partnership with at least one publisher who links (without cost to the Center or additional costs to the consumer) the materials and resources created by the Center to its products and services. The Center must develop targeted mechanisms for the dissemination and utilization of products by preservice personnel preparation programs in institutions of higher education, including community colleges, OSEP-funded State Personnel Development grantees, and professional development providers whose services target personnel serving infants, toddlers, and preschoolers with disabilities. The Center must also develop efficient, effective strategies for providing technical assistance to assist higher education faculty and professional development providers in the use of the training modules created by the Center.

(e) *Conduct comprehensive project evaluation.* Design and conduct a comprehensive evaluation of the work, accomplishments, outcomes, impact, and effectiveness of the Center. This evaluation must be designed to provide information to guide ongoing refinements to the structure, activities, workflow, and products that will improve the ultimate impact and effectiveness of the Center. This comprehensive evaluation must also be designed to measure the impact of the Center's work on the goal of enhancing the knowledge and skills of the targeted constituent group so that they can effectively provide young children with disabilities the services and supports necessary for them to fully participate in natural environments, meet their developmental and learning potential, and be prepared to enter school ready to learn.

(f) *Establish an advisory board.* In designing and carrying out the required activities of the Center, the project must establish and make ongoing and effective use of a Board of Advisors. The make-up of the Board of Advisors should include as appropriate: Professional organization representatives, higher education faculty, practicing personnel, professional development providers, family members of young children with disabilities, State and local IDEA Part C and section 619 coordinators, federally supported technical assistance providers, and federally supported higher education project directors.

(g) *Maintain communication with OSEP.* The project should maintain ongoing communication with the OSEP Project Officer, including monthly conference calls. The project must also budget for a three-day Project Directors' meeting in Washington, DC during each year of the project plus additional two-

day trips annually to Washington, DC to attend additional national meetings and to meet and collaborate with the OSEP Project Officer and other funded projects for purposes of cross-project collaboration and information exchange.

*Fourth and Fifth Years of the Project*

In deciding whether to continue funding the Center for the fourth and fifth years, the Secretary will consider the requirements of 34 CFR 75.253(a), and in addition—

(a) The recommendation of a review team consisting of experts selected by the Secretary. The review will be conducted in Washington, DC during the last half of the project's second year; projects must budget for travel expenses associated with this one-day intensive review;

(b) The timeliness and effectiveness with which all requirements of the negotiated cooperative agreement have been or are being met by the Center; and

(c) The degree to which the Center's products reflect evidence-based practices and scientifically-based research and address the identified critical knowledge and skill enhancement needs within the field.

*Waiver of Proposed Rulemaking:* Under the Administrative Procedure Act (APA) (5 U.S.C. 553) the Department generally offers interested parties the opportunity to comment on a proposed priority. However, section 681(d) of IDEA makes the public comment requirements of the APA inapplicable to the priority in this notice.

*Program Authority:* 20 U.S.C. 1462 and 1481(d).

*Applicable Regulations:* The Education Department General Administrative Regulations (EDGAR) in 34 CFR parts 74, 75, 77, 79, 80, 81, 82, 84, 85, 86, 97, 98, and 99.

## II. Award Information

*Type of Award:* Cooperative agreement.

*Estimated Available Funds:* The Administration has requested $90,626,000 for the Personnel Development to Improve Services and Results for Children with Disabilities program for FY 2007, of which we intend to use an estimated $600,000 for the National Early Childhood Training Enhancement Center competition. The actual level of funding, if any, depends on final congressional action. However, we are inviting applications to allow enough time to complete the grant process if Congress appropriates funds for this program.

*Maximum Award:* We will reject any application that proposes a budget exceeding $600,000 for a single budget period of 12 months. The Assistant Secretary for Special Education and Rehabilitative Services may change the maximum amount through a notice published in the **Federal Register**.

*Number of Awards:* 1.

**Note:** The Department is not bound by any estimates in this notice.

*Project Period:* Up to 60 months.

## III. Eligibility Information

1. *Eligible Applicants:* IHEs.

2. *Cost Sharing or Matching:* This competition does not involve cost sharing or matching.

3. *Other: General Requirements*—(a) The projects funded under this competition must make positive efforts to employ and advance in employment qualified individuals with disabilities (see section 606 of IDEA).

(b) Applicants and grant recipients funded under this competition must involve individuals with disabilities or parents of individuals with disabilities ages birth through 26 in planning, implementing, and evaluating the projects (see section 682(a)(1)(A) of IDEA).

## IV. Application and Submission Information

1. *Address to Request Application Package:* Education Publications Center (ED Pubs), P.O. Box 1398, Jessup, MD 20794–1398. Telephone (toll free): 1–877–433–7827. FAX: (301) 470–1244. If you use a telecommunications device for the deaf (TDD), you may call (toll free): 1–877–576–7734.

You may also contact ED Pubs at its Web site: *http://www.ed.gov/pubs/edpubs.html* or you may contact ED Pubs at its e-mail address: *edpubs@inet.ed.gov.*

If you request an application from ED Pubs, be sure to identify this competition as follows: CFDA number 84.325J.

Individuals with disabilities may obtain a copy of the application package in an alternative format (e.g., Braille, large print, audiotape, or computer diskette) by contacting the Grants and Contracts Services Team listed under **FOR FURTHER INFORMATION CONTACT** in section VII of this notice.

2. *Content and Form of Application Submission:* Requirements concerning the content of an application, together with the forms you must submit, are in the application package for this competition.

*Page Limit:* The application narrative (Part III of the application) is where you, the applicant, address the selection criteria that reviewers use to evaluate your application. You must limit Part III to the equivalent of no more than 70 pages, using the following standards:

- A ''page'' is 8.5″ x 11″, on one side only, with 1'' margins at the top, bottom, and both sides.
- Double space (no more than three lines per vertical inch) all text in the application narrative, including titles, headings, footnotes, quotations, references, and captions, as well as all text in charts, tables, figures, and graphs.
- Use a font that is either 12-point or larger or no smaller than 10 pitch (characters per inch).

The page limit does not apply to Part I, the cover sheet; Part II, the budget section, including the narrative budget justification; Part IV, the assurances and certifications; or the one-page abstract, the resumes, the bibliography, the references, or the letters of support. However, you must include all of the application narrative in Part III.

We will reject your application if—

- You apply these standards and exceed the page limit; or
- You apply other standards and exceed the equivalent of the page limit.

3. *Submission Dates and Times:*

*Applications Available:* March 5, 2007.

*Deadline for Transmittal of Applications:* April 19, 2007.

Applications for grants under this competition may be submitted electronically using the *Grants.gov* Apply site (*Grants.gov*), or in paper format by mail or hand delivery. For information (including dates and times) about how to submit your application electronically, or by mail or hand delivery, please refer to section IV. 6. *Other Submission Requirements in this notice.*

We do not consider an application that does not comply with the deadline requirements.

Individuals with disabilities who need an accommodation or auxiliary aid in connection with the application process should contact the person listed under **FOR FURTHER INFORMATION CONTACT.**

*Deadline for Intergovernmental Review:* June 18, 2007.

4. *Intergovernmental Review:* This program is subject to Executive Order 12372 and the regulations in 34 CFR part 79. Information about Intergovernmental Review of Federal Programs under Executive Order 12372 is in the application package for this competition.

5. *Funding Restrictions:* We reference regulations outlining funding restrictions in the *Applicable Regulations* section of this notice.

6. *Other Submission Requirements:* Applications for grants under this

competition may be submitted electronically or in paper format by mail or hand delivery.

a. *Electronic Submission of Applications.* To comply with the President's Management Agenda, we are participating as a partner in the Governmentwide Grants.gov Apply site. The National Early Childhood Training Enhancement Center competition—CFDA number 84.325J is included in this project. We request your participation in Grants.gov.

If you choose to submit your application electronically, you must use the Governmentwide Grants.gov Apply site at *http://www.Grants.gov.* Through this site, you will be able to download a copy of the application package, complete it offline, and then upload and submit your application. You may not e-mail an electronic copy of a grant application to us.

You may access the electronic grant application for the National Early Childhood Training Enhancement Center competition—CFDA number 84.325J at: *http://www.grants.gov.* You must search for the downloadable application package for this program by the CFDA number. Do not include the CFDA number's alpha suffix in your search (e.g., search for 84.326, not 84.326A).

Please note the following:

- Your participation in Grants.gov is voluntary.
- When you enter the Grants.gov site, you will find information about submitting an application electronically through the site, as well as the hours of operation.
- Applications received by Grants.gov are time and date stamped. Your application must be fully uploaded and submitted and must be date and time stamped by the Grants.gov system no later than 4:30 p.m., Washington, DC time, on the application deadline date. Except as otherwise noted in this section, we will not consider your application if it is date and time stamped by the Grants.gov system later than 4:30 p.m., Washington, DC time, on the application deadline date. When we retrieve your application from Grants.gov, we will notify you if we are rejecting your application because it was date and time stamped by the Grants.gov system after 4:30 p.m., Washington, DC time, on the application deadline date.
- The amount of time it can take to upload an application will vary depending on a variety of factors, including the size of the application and the speed of your Internet connection. Therefore, we strongly recommend that you do not wait until the application deadline date to begin the submission process through Grants.gov.
- You should review and follow the Education Submission Procedures for submitting an application through Grants.gov that are included in the application package for this competition to ensure that you submit your application in a timely manner to the Grants.gov system. You can also find the Education Submission Procedures pertaining to Grants.gov at *http://e-Grants.ed.gov/help/GrantsgovSubmissionProcedures.pdf.*
- To submit your application via Grants.gov, you must complete all steps in the Grants.gov registration process (see *http://www.grants.gov/applicants/get_registered.jsp*). These steps include (1) registering your organization, a multi-part process that includes registration with the Central Contractor Registry (CCR); (2) registering yourself as an Authorized Organization Representative (AOR); and (3) getting authorized as an AOR by your organization. Details on these steps are outlined in the Grants.gov 3-Step Registration Guide (see *http://www.grants.gov/section910/Grants.govRegistrationBrochure.pdf*). You also must provide on your application the same D-U-N-S Number used with this registration. Please note that the registration process may take five or more business days to complete, and you must have completed all registration steps to allow you to submit successfully an application via Grants.gov. In addition you will need to update your CCR registration on an annual basis. This may take three or more business days to complete.
- You will not receive additional point value because you submit your application in electronic format, nor will we penalize you if you submit your application in paper format.
- If you submit your application electronically, you must submit all documents electronically, including all information you typically provide on the following forms: Application for Federal Assistance (SF 424), the Department of Education Supplemental Information for SF 424, Budget Information—Non-Construction Programs (ED 524), and all necessary assurances and certifications. Please note that two of these forms—the SF 424 and the Department of Education Supplemental Information for SF 424—have replaced the ED 424 (Application for Federal Education Assistance).
- If you submit your application electronically, you must attach any narrative sections of your application as files in a .DOC (document), .RTF (rich text), or .PDF (Portable Document) format. If you upload a file type other than the three file types specified in this paragraph or submit a password-protected file, we will not review that material.
- Your electronic application must comply with any page-limit requirements described in this notice.
- After you electronically submit your application, you will receive from Grants.gov an automatic notification of receipt that contains a Grants.gov tracking number. (This notification indicates receipt by Grants.gov only, not receipt by the Department.) The Department then will retrieve your application from Grants.gov and send a second notification to you by e-mail. This second notification indicates that the Department has received your application and has assigned your application a PR/Award number (an ED-specified identifying number unique to your application).
- We may request that you provide us original signatures on forms at a later date.

*Application Deadline Date Extension in Case of Technical Issues with the Grants.gov System:* If you are experiencing problems submitting your application through Grants.gov, please contact the Grants.gov Support Desk at 1–800–518–4726. You must obtain a Grants.gov Support Desk Case Number and must keep a record of it.

If you are prevented from electronically submitting your application on the application deadline date because of technical problems with the Grants.gov system, we will grant you an extension until 4:30 p.m., Washington, DC time, the following business day to enable you to transmit your application electronically or by hand delivery. You also may mail your application by following the mailing instructions described elsewhere in this notice.

If you submit an application after 4:30 p.m., Washington, DC time, on the application deadline date, please contact the person listed elsewhere in this notice under **FOR FURTHER INFORMATION CONTACT** and provide an explanation of the technical problem you experienced with Grants.gov, along with the Grants.gov Support Desk Case Number. We will accept your application if we can confirm that a technical problem occurred with the Grants.gov system and that that problem affected your ability to submit your application by 4:30 p.m., Washington, DC time, on the application deadline date. The Department will contact you after a determination is made on whether your application will be accepted.

**Note:** The extensions to which we refer in this section apply only to the unavailability of, or technical problems with, the Grants.gov system. We will not grant you an extension if you failed to fully register to submit your application to Grants.gov before the application deadline date and time or if the technical problem you experienced is unrelated to the Grants.gov system.

b. *Submission of Paper Applications by Mail.* If you submit your application in paper format by mail (through the U.S. Postal Service or a commercial carrier), you must mail the original and two copies of your application, on or before the application deadline date, to the Department at the applicable following address:

*By mail through the U.S. Postal Service:* U.S. Department of Education, Application Control Center, *Attention:* (CFDA Number 84.325J), 400 Maryland Avenue, SW., Washington, DC 20202–4260. or

*By mail through a commercial carrier:* U.S. Department of Education, Application Control Center—Stop 4260, *Attention:* (CFDA Number 84.325J), 7100 Old Landover Road, Landover, MD 20785–1506.

Regardless of which address you use, you must show proof of mailing consisting of one of the following:

(1) A legibly dated U.S. Postal Service postmark.

(2) A legible mail receipt with the date of mailing stamped by the U.S. Postal Service.

(3) A dated shipping label, invoice, or receipt from a commercial carrier.

(4) Any other proof of mailing acceptable to the Secretary of the U.S. Department of Education.

If you mail your application through the U.S. Postal Service, we do not accept either of the following as proof of mailing:

(1) A private metered postmark.

(2) A mail receipt that is not dated by the U.S. Postal Service.

If your application is postmarked after the application deadline date, we will not consider your application.

**Note:** The U.S. Postal Service does not uniformly provide a dated postmark. Before relying on this method, you should check with your local post office.

c. *Submission of Paper Applications by Hand Delivery.* If you submit your application in paper format by hand delivery, you (or a courier service) must deliver the original and two copies of your application by hand, on or before the application deadline date, to the Department at the following address: U.S. Department of Education, Application Control Center, *Attention:* (CFDA Number 84.325J), 550 12th Street, SW., Room 7041, Potomac Center Plaza, Washington, DC 20202–4260.

The Application Control Center accepts hand deliveries daily between 8 a.m. and 4:30 p.m., Washington, DC time, except Saturdays, Sundays and Federal holidays.

*Note for Mail or Hand Delivery of Paper Applications:* If you mail or hand deliver your application to the Department—

(1) You must indicate on the envelope and—if not provided by the Department—in Item 11 of the SF 424 the CFDA number, including suffix letter, if any, of the competition under which you are submitting your application; and

(2) The Application Control Center will mail to you a notification of receipt of your grant application. If you do not receive this notification within 15 business days from the application deadline date, you should call the U.S. Department of Education Application Control Center at (202) 245–6288.

## V. Application Review Information

1. *Selection Criteria:* The selection criteria for this competition are from 34 CFR 75.210 and are listed in the application package.

2. *Treating A Priority As Two Separate Competitions:* In the past, there have been problems in finding peer reviewers without conflicts of interest for competitions in which many entities throughout the country submit applications. The Standing Panel requirements under IDEA also have placed additional constraints on the availability of reviewers. Therefore, the Department has determined that, for some discretionary competitions, applications may be separated into two or more groups and ranked and selected for funding within the specific group. This procedure will ensure the availability of a much larger group of reviewers without conflicts of interest. It also will increase the quality, independence and fairness of the review process and permit panel members to review applications under discretionary competitions for which they have also submitted applications. However, if the Department decides to select for funding an equal number of applications in each group, this may result in different cut-off points for fundable applications in each group.

## VI. Award Administration Information

1. *Award Notices:* If your application is successful, we notify your U.S. Representative and U.S. Senators and send you a Grant Award Notification (GAN). We may also notify you informally.

If your application is not evaluated or not selected for funding, we notify you.

2. *Administrative and National Policy Requirements:* We identify administrative and national policy requirements in the application package and reference these and other requirements in the *Applicable Regulations* section of this notice.

We reference the regulations outlining the terms and conditions of an award in the *Applicable Regulations* section of this notice and include these and other specific conditions in the GAN. The GAN also incorporates your approved application as part of your binding commitments under the grant.

3. *Reporting:* At the end of your project period, you must submit a final performance report, including financial information, as directed by the Secretary. If you receive a multi-year award, you must submit an annual performance report that provides the most current performance and financial expenditure information as specified by the Secretary in 34 CFR 75.118.

4. *Performance Measures:* Under the Government Performance and Results Act of 1993 (GPRA), the Department has developed annual performance measures that will yield information on various aspects of the technical assistance and dissemination activities currently being supported under IDEA Part D. These measures will be used for the National Early Childhood Training Enhancement Center competition. They are: The percentage of products and services deemed to be of high quality by an independent review panel of qualified experts or individuals with appropriate expertise to review the substantive content of the products and services; the percentage of products and services deemed to be of high relevance to educational and early intervention policy or practice by an independent review panel of qualified members of the target audiences of the technical assistance and disseminations; the percentage of all products and services deemed to be of high usefulness by target audiences to improve educational or early intervention policy or practice.

We will notify grantees if they will be required to provide any information related to these measures.

Grantees will also be required to report information on their projects' performance in annual reports to the Department (34 CFR 75.590).

## VII. Agency Contact

*For Further Information Contact:* Christy Kavulic, U.S. Department of Education, 400 Maryland Avenue, SW., Room 4057, Potomac Center Plaza, Washington, DC 20202–2550. Telephone: (202) 245–7359.

If you use a telecommunications device for the deaf (TDD), you may call the Federal Relay Service (FRS) at 1–800–877–8339.

Individuals with disabilities may obtain this document in an alternative format (e.g., Braille, large print, audiotape, or computer diskette) on request by contacting the following office: The Grants and Contracts Services Team, U.S. Department of Education, 400 Maryland Avenue, SW., Potomac Center Plaza, Washington, DC 20202–2550. Telephone: (202) 245–7363.

## VIII. Other Information

*Electronic Access to This Document:* You may view this document, as well as all other documents of this Department published in the **Federal Register**, in text or Adobe Portable Document Format (PDF) on the Internet at the following site: *http://www.ed.gov/news/fedregister*.

To use PDF you must have Adobe Acrobat Reader, which is available free at this site. If you have questions about using PDF, call the U.S. Government Printing Office (GPO), toll free, at 1–888–293–6498; or in the Washington, DC, area at (202) 512–1530.

**Note:** The official version of this document is the document published in the **Federal Register**. Free Internet access to the official edition of the **Federal Register** and the Code of Federal Regulations is available on GPO Access at: *http://www.gpoaccess.gov/nara/index.html*.

Dated: February 28, 2007.

**John H. Hager,**

*Assistant Secretary for Special, Education and Rehabilitative, Services.*

[FR Doc. E7–3793 Filed 3–2–07; 8:45 am]

**BILLING CODE 4000–01–P**

---

## ENVIRONMENTAL PROTECTION AGENCY

**[FRL–8283–2]**

## Proposed Settlement Agreement, Clean Air Act Citizen Suit

**AGENCY:** Environmental Protection Agency (EPA).

**ACTION:** Notice of proposed settlement agreement; request for public comment.

**SUMMARY:** In accordance with section 113(g) of the Clean Air Act, as amended (''Act''), 42 U.S.C. 7413(g), notice is hereby given of a proposed settlement agreement, to address a lawsuit filed by the Center for Biological Diversity, Preston Forsythe and Hilary Lambert (collectively ''Plaintiffs''): *Center for Biological Diversity et al.* v. *Johnson*, No. 06–1350 (D. D.C.). On July 31, 2006, Plaintiffs filed a complaint alleging that EPA had a mandatory duty under 42 U.S.C. 7661(b)(2), to respond within 60 days to Plaintiffs Title V petition requesting that EPA object to the proposed Tennessee Valley Authority's (''TVA'') Paradise Fossil Plant Title V Operating Permit (''TVA Paradise Title V Operating Permit''). The complaint also alleges that EPA had a mandatory duty under 42 U.S.C. 7661(b)(3) and (c) and 40 CFR 71.4(e) to modify, terminate, or revoke, or issue or deny, the proposed TVA Paradise Title V Operating permit and that EPA has unreasonably delayed modifying, terminating, or revoking, or issuing or denying, the permit. The complaint also alleges that EPA has unreasonably delayed responding to the Plaintiffs' petition for rulemaking requesting, pursuant to 5 U.S.C. 553(a), that EPA promulgate a rule to amend the Kentucky State Implementation Plan to fully incorporate the credible evidence rule. Under the terms of the proposed settlement agreement, EPA shall by May 25, 2007, take final action to grant or deny Plaintiffs' April 2005 petition for rulemaking. The proposed settlement agreement also provides that EPA shall conclude a completeness determination within 60 days after receipt of TVA's forthcoming Title V federal operating permit application for the Paradise Plant. Within 18 months after determining the application is complete, EPA shall take final action to issue the permit.

**DATES:** Written comments on the proposed settlement agreement must be received by April 4, 2007.

**ADDRESSES:** Submit your comments, identified by Docket ID number EPA–HQ–OGC–2007–0190, online at *http://www.regulations.gov* (EPA's preferred method); by e-mail to *oei.docket@epa.gov*; mailed to EPA Docket Center, Environmental Protection Agency, Mailcode: 2822T, 1200 Pennsylvania Ave., NW., Washington, DC 20460–0001; or by hand delivery or courier to EPA Docket Center, EPA West, Room 3334, 1301 Constitution Ave., NW., Washington, DC, between 8:30 a.m. and 4:30 p.m. Monday through Friday, excluding legal holidays. Comments on a disk or CD–ROM should be formatted in Word or ASCII file, avoiding the use of special characters and any form of encryption, and may be mailed to the mailing address above.

**FOR FURTHER INFORMATION CONTACT:** Apple Chapman, Air and Radiation Law Office (2344A), Office of General Counsel, U.S. Environmental Protection Agency, 1200 Pennsylvania Ave., NW., Washington, DC 20460; telephone: (202) 564–5666; fax number (202) 564–5603; e-mail address: *chapman.apple@epa.gov.*

**SUPPLEMENTARY INFORMATION:**

## I. Additional Information About the Proposed Settlement

On February 18, 2005, EPA formally objected to the issuance of the proposed TVA Paradise's Title V Operating Permit submitted by the Kentucky Division of Air Quality (''KDAQ''). On April 21, 2005, Plaintiffs filed a petition requesting that EPA object to the proposed TVA Paradise Title V Operating Permit and a petition for rulemaking requesting that EPA amend the Kentucky State Implementation Plant to fully incorporate the credible evidence rule. On August 18, 2006, KDAQ withdrew the proposed TVA Paradise Title V Operating Permit. Subsequently, EPA initiated a Part 71 permit process for the TVA Paradise Plant and on December 14, 2006, EPA published notice in the **Federal Register** denying Plaintiffs' Title V petition. EPA has filed a motion to dismiss Plaintiffs' Complaint.

The settlement agreement, which is subject to CAA section 113(g), provides that by May 25, 2007, EPA shall take final action to grant or deny Plaintiffs' petition for rulemaking. The agreement also provides that within 60 days after receipt of TVA's forthcoming permit application to EPA for a Title V permit for the Paradise Plant, EPA shall conclude a completeness determination. Within 18 months after determining the application is complete, EPA shall take final action to issue the permit. Should KDAQ submit a new proposed CAA Title V Operating Permit for the TVA Paradise Plant that EPA determines adequately addresses the issues raised by EPA in its February 18, 2006 objections, EPA must notify Plaintiff's counsel with written notice that the commitments with regard to the Title V Federal Operating Permit for the TVA Paradise Plant are null and void. Within 20 days after EPA has fulfilled the above obligations or after agreement becomes null and void, Plaintiffs shall file a motion to dismiss with prejudice.

For a period of thirty (30) days following the date of publication of this notice, the Agency will receive written comments relating to the proposed settlement agreement from persons who were not named as parties or intervenors to the litigation in question. EPA or the Department of Justice may withdraw or withhold consent to the proposed settlement agreement if the

comments disclose facts or considerations that indicate that such consent is inappropriate, improper, inadequate, or inconsistent with the requirements of the Act. Unless EPA or the Department of Justice determines, based on any comment which may be submitted, that consent to the settlement agreement should be withdrawn, the terms of the agreement will be affirmed.

**II. Additional Information About Commenting on the Proposed Settlement**

*A. How Can I Get a Copy of the Settlement?*

Direct your comments to the official public docket for this action under Docket ID No. EPA–HQ–OGC–2007–0190 which contains a copy of the settlement. The official public docket is available for public viewing at the Office of Environmental Information (OEI) Docket in the EPA Docket Center, EPA West, Room 3334, 1301 Constitution Ave., NW., Washington, DC. The EPA Docket Center Public Reading Room is open from 8:30 a.m. to 4:30 p.m., Monday through Friday, excluding legal holidays. The telephone number for the Public Reading Room is (202) 566–1744, and the telephone number for the OEI Docket is (202) 566–1752.

An electronic version of the public docket is available through *www.regulations.gov.* You may use the *www.regulations.gov* to submit or view public comments, access the index listing of the contents of the official public docket, and to access those documents in the public docket that are available electronically. Once in the system, select ''search,'' then key in the appropriate docket identification number.

It is important to note that EPA's policy is that public comments, whether submitted electronically or in paper, will be made available for public viewing online at *http://www.regulations.gov* without change, unless the comment contains copyrighted material, CBI, or other information whose disclosure is restricted by statute. Information claimed as CBI and other information whose disclosure is restricted by statute is not included in the official public docket or in the electronic public docket. EPA's policy is that copyrighted material, including copyrighted material contained in a public comment, will not be placed in EPA's electronic public docket but will be available only in printed, paper form in the official public docket. Although not all docket materials may be available electronically, you may still access any of the publicly available docket materials through the EPA Docket Center.

*B. How and To Whom Do I Submit Comments?*

You may submit comments as provided in the **ADDRESSES** section. Please ensure that your comments are submitted within the specified comment period. Comments received after the close of the comment period will be marked ''late.'' EPA is not required to consider these late comments.

If you submit an electronic comment, EPA recommends that you include your name, mailing address, and an e-mail address or other contact information in the body of your comment and with any disk or CD ROM you submit. This ensures that you can be identified as the submitter of the comment and allows EPA to contact you in case EPA cannot read your comment due to technical difficulties or needs further information on the substance of your comment. Any identifying or contact information provided in the body of a comment will be included as part of the comment that is placed in the official public docket, and made available in EPA's electronic public docket. If EPA cannot read your comment due to technical difficulties and cannot contact you for clarification, EPA may not be able to consider your comment.

Use of the www.regulations.gov Web site to submit comments to EPA electronically is EPA's preferred method for receiving comments. The electronic public docket system is an ''anonymous access'' system, which means EPA will not know your identity, e-mail address, or other contact information unless you provide it in the body of your comment. In contrast to EPA's electronic public docket, EPA's electronic mail (e-mail) system is not an ''anonymous access'' system. If you send an e-mail comment directly to the Docket without going through www.regulations.gov, your e-mail address is automatically captured and included as part of the comment that is placed in the official public docket, and made available in EPA's electronic public docket.

Dated: February 27, 2007.

**Richard B. Ossias,**

*Associate General Counsel.*

[FR Doc. E7–3759 Filed 3–2–07; 8:45 am]

BILLING CODE 6560–50–P

## EXPORT-IMPORT BANK OF THE UNITED STATES

### Sunshine Act Meeting

**ACTION:** Notice of a Partially Open Meeting of the Board of Directors of the Export-Import Bank of the United States

**TIME AND PLACE:** Thursday, March 8, 2007 at 9:30 a.m. The meeting will be held at Ex-Im Bank in Room 1143, 811 Vermont Avenue, NW., Washington, DC 20571.

**OPEN AGENDA ITEM:** Small Business Committee Resolution (Amendment).

**PUBLIC PARTICIPATION:** The meeting will be open to public participation for Item No. 1 only.

**FURTHER INFORMATION:** For further information, contact; Office of the Secretary, 811 Vermont Avenue, NW., Washington, DC 20571 (Telephone 202–565–3957).

**Howard A. Schweitzer,**

*General Counsel.*

[FR Doc. 07–1016 Filed 3–1–07; 3:07 pm]

BILLING CODE 6690–01–M

## FEDERAL COMMUNICATIONS COMMISSION

**[AU Docket No. 06–206; Report No. AUC–07–71–B (Auction No. 71); DA 07–30]**

### Auction of Broadband PCS Spectrum Scheduled for May 16, 2007; Notice and Filing Requirements, Minimum Opening Bids, Upfront Payments and Other Procedures for Auction No. 71

**AGENCY:** Federal Communications Commission.

**ACTION:** Notice.

**SUMMARY:** This document announces the procedures and minimum opening bids for the upcoming auction of certain Broadband PCS Spectrum (Auction No. 71). This document is intended to familiarize prospective bidders with the procedures and minimum opening bids for this auction.

**DATES:** Applications to participate in Broadband PCS Auction No. 71 must be filed before 6 p.m. ET on March 16, 2007. Bidding for Auction No. 71 is scheduled to begin on May 16, 2007.

**FOR FURTHER INFORMATION CONTACT:** Wireless Telecommunications Bureau, Auctions Spectrum and Access Division: For legal questions: Stephen Johnson at (202) 418–0660. For general auction questions: Roy Knowles or Lisa Stover at (717) 338–2868. Mobility Division: For service rule questions: Michael Connelly (legal and licensing)

or Keith Harper (technical) at (202) 418–0620. To request materials in accessible formats (Braille, large print, electronic files, audio format) for people with disabilities, send an e-mail to *fcc504@fcc.*gov or call the Consumer and Governmental Affairs Bureau at (202) 418–0530 or (202) 418–0432 (TTY).

**SUPPLEMENTARY INFORMATION:** This is a summary of the *Auction No. 71 Procedures* Public Notice released on January 16, 2007. The complete text of the *Auction No. 71 Procedures Public Notice,* including attachments, as well as related Commission documents are available for public inspection and copying from 8 a.m. to 4:30 p.m. Eastern Time (ET) Monday through Thursday or from 8 a.m. to 11:30 a.m. on Friday at the FCC Reference Information Center, Portals II, 445 12th Street, SW., Room CY–A257, Washington, DC 20554. The *Auction No. 71 Procedures Public Notice* and related Commission documents may also be purchased from the Commission's duplicating contractor, Best Copy and Printing, Inc. (BCPI), Portals II, 445 12th Street, SW., Room CY–B402, Washington, DC, 20554, telephone 202–488–5300, facsimile 202–488–5563, or Web site: *http://www.BCPIWEB.com.* When ordering documents from BCPI, please provide the appropriate FCC document number, for example, DA 07–30 for the *Auction No. 71 Procedures Public Notice*. The *Auction No. 71 Procedures Public Notice* and related documents are also available on the Internet at the Commission's Web site: *http://wireless.fcc.gov/auctions/71/.*

## I. General Information

### *A. Introduction*

1. The Commission announces the procedures and minimum opening bid amounts for the upcoming auction of 38 broadband Personal Communications Service (PCS) licenses scheduled to begin on May 16, 2007 (Auction No. 71). On November 17, 2006, in accordance with Section 309(j)(3) of the Communications Act of 1934, as amended, the Wireless Telecommunications Bureau (Bureau) released a public notice seeking comment on reserve prices or minimum opening bid amounts and the procedures to be used in Auction No. 71. The Commission received no comments in response to the *Auction No. 71 Comment Public Notice* 71 FR 69125, November 29, 2006.

2. In the *Auction No. 71 Comment Public Notice*, the Bureau proposed to include all 38 PCS licenses in a single auction using the Commission's standard simultaneous multiple-round (SMR) auction format. The Bureau sought comment on the feasibility and desirability of allocating the PCS licenses using the Commission's package bidding format (SMR–PB). Based on the record and the particular circumstances of the auction of these PCS licenses, the Bureau will include all 38 PCS licenses in a single auction using the Commission's standard SMR format, as proposed. Package bidding will not be used in Auction No. 71.

3. For Auction No. 71, the Commission will determine the information procedures based primarily on the eligibility ratio, a measure of likely competition in the auction. The eligibility ratio is defined as the total number of bidding units of eligibility purchased by bidders through their upfront payments, divided by the total number of bidding units for the licenses in the auction. Specifically, if the eligibility ratio equals or exceeds three, the Commission will use the information procedures since with sufficient likely competition, the anti-competitive behavior that limited information procedures aim to deter is unlikely to be successful. If the eligibility ratio is less than three, in general the Commission will withhold certain information on bidder interests and bidder identities. However, if the eligibility ratio is less than three, the Commission reserves the discretion not to limit information on bidder interests and identities if circumstances indicate that limited information procedures would not be an effective tool for deterring anti-competitive behavior. Such circumstances would occur, for example, if only two applicants became qualified to participate in the bidding, since limited information procedures would be ineffective in preventing bidders from knowing the identity of the competing bidder.

4. In the event that the conditions described above result in the use of procedures under which certain information is withheld, the Commission will release: (1) Each bidder's eligibility and upfront payment made prior to the start of the auction; and (2) the amounts of all gross bids (including the losing bids) for each license after each round, but not the identities of the bidders placing the bids. The Commission believes this provides bidders with information regarding license valuations without compromising the goal of reducing the potential for anti-competitive outcomes.

5. Pursuant to these procedures, information on the license selections of auction applicants will be withheld at least until the upfront payment deadline has passed and the Commission determines the information procedures that will be used for the auction. Therefore, to enable applicants to comply with the Commission's anti-collusion rules, once the Bureau has conducted its initial review of applications to participate in Auction No. 71, each applicant will receive a letter that lists the other applicants in Auction No. 71 that have applied for licenses in any of the same geographic areas as the applicant.

#### i. Licenses To Be Auctioned

6. Auction No. 71 will offer 38 licenses for A, C, D, E, and F blocks of broadband PCS spectrum. The spectrum to be auctioned has been offered previously in other auctions but was unsold and/or returned to the Commission as a result of license cancellation or termination. A complete list of licenses available for Auction No. 71 is included as Attachment A of the *Auction No. 71 Procedures Public Notice.*

7. Some of the C block licenses to be offered in Auction No. 71 are available to all bidders in open bidding, while others are available only to entrepreneurs in closed bidding. The A, B, E, and F block licenses, as well as certain C block licenses, are available in open bidding. Size-based bidding credits will be available for C and F block licenses won in open bidding. In order to qualify as an entrepreneur for closed bidding, an applicant, including attributable investors and affiliates, must have had gross revenues of less than $125 million in each of the last two years and must have less than $500 million in total assets. Size-based bidding credits are not available for C block licenses won in closed bidding or for licenses in the A, D, or E blocks.

8. Because of the history of licenses for broadband PCS spectrum, certain of the licenses available in Auction No. 71 cover less bandwidth and fewer frequencies and in some cases, licenses are available for only part of a market. See Attachment A of the *Auction No. 71 Procedures Public Notice* to determine the precise scope of the licenses that will be offered.

### *B. Rules and Disclaimers*

#### i. Relevant Authority

9. Prospective applicants must familiarize themselves thoroughly with the Commission's general competitive bidding rules set forth in Title 47CFR part 1, including recent amendments and clarifications; rules relating to broadband PCS, contained in Title 47 CFR part 24; and rules relating to

applications, practice and procedure contained in Title 47 CFR part 1. Prospective applicants must also be thoroughly familiar with the procedures, terms and conditions (collectively, terms) contained in the Auction No. 71 Procedures Public Notice and the Commission's decisions in proceedings regarding competitive bidding procedures, application requirements, and obligations of Commission licensees.

10. The terms contained in the Commission's rules, relevant orders, and public notices are not negotiable. The Commission may amend or supplement the information contained in its public notices at any time, and will issue public notices to convey any new or supplemental information to applicants. It is the responsibility of all applicants to remain current with all Commission rules and with all public notices pertaining to this auction.

ii. Prohibition of Collusion; Compliance With Antitrust Laws

11. To ensure the competitiveness of the auction process, § 1.2105(c) of the Commission's rules prohibits applicants competing for licenses in any of the same geographic license areas from communicating with each other about bids, bidding strategies, or settlements unless such applicants have identified each other on their short-form applications (FCC Forms 175) as parties with whom they have entered into agreements pursuant to § 1.2105(a)(2)(viii). In Auction No. 71, the rule would apply to any applicants for licenses in the same BTA or MTA. The rule would also apply to applicants for licenses in overlapping BTAs and MTAs. For example, assume that one applicant applies for an MTA license and a second applicant applies for a BTA license covering any area within that MTA. The two entities will have applied for licenses covering the same geographic area and would be precluded from communicating with each other under the rule. In addition, the rule would preclude applicants that apply to bid for all licenses from communicating with all other applicants. Thus, applicants that have applied for licenses covering the same markets (unless they have identified each other on their FCC Form 175 applications as parties with whom they have entered into agreements under § 1.2105(a)(2)(viii)) must affirmatively avoid all communications with or disclosures to each other that affect or have the potential to affect bids or bidding strategy, which may include communications regarding the post-auction market structure. This prohibition begins at the short-form application filing deadline and ends at the down payment deadline after the auction. *This prohibition applies to all applicants regardless of whether such applicants become qualified bidders or actually bid.* Information concerning applicants' license selections will not be made public at least until the upfront payment deadline has passed and the Commission determines the information procedures that will be used for the auction. Therefore, the Commission will inform each applicant by letter of the identity of each of the other applicants that has applied for licenses covering any of the same geographic areas as the licenses that it has selected in its short-form application.

12. For purposes of this prohibition, § 1.2105(c)(7)(i) defines applicant as including all officers and directors of the entity submitting a short-form application to participate in the auction, all controlling interests of that entity, as well as all holders of partnership and other ownership interests and any stock interest amounting to 10 percent or more of the entity, or outstanding stock, or outstanding voting stock of the entity submitting a short-form application.

13. Applicants for licenses for any of the same geographic license areas must not communicate directly or indirectly about bids or bidding strategy. Accordingly, such applicants are encouraged not to use the same individual as an authorized bidder. A violation of the anti-collusion rule could occur if an individual acts as the authorized bidder for two or more competing applicants, and conveys information concerning the substance of bids or bidding strategies between such applicants. Also, if the authorized bidders are different individuals employed by the same organization (*e.g.*, law firm or engineering firm or consulting firm), a violation similarly could occur. In such a case, at a minimum, applicants should certify on their applications that precautionary steps have been taken to prevent communication between authorized bidders and that applicants and their bidding agents will comply with the anti-collusion rule. A violation of the anti-collusion rule could occur in other contexts, such as an individual serving as an officer for two or more applicants. Moreover, the Commission has found a violation of the anti-collusion rule where a bidder used the Commission's bidding system to disclose its bidding strategy in a manner that explicitly invited other auction participants to cooperate and collaborate in specific markets, and has placed auction participants on notice that the use of its bidding system to disclose market information to competitors will not be tolerated and will subject bidders to sanctions. Bidders are cautioned that the Commission remains vigilant about prohibited communications taking place in other situations. For example, the Commission has warned that prohibited communications concerning bids and bidding strategies may include communications regarding capital calls or requests for additional funds in support of bids or bidding strategies to the extent such communications convey information concerning the bids and bidding strategies directly or indirectly. Applicants are hereby placed on notice that public disclosure of information relating to bidder interests and bidder identities that—although revealed prior to and during other Commission auctions—is confidential in this auction at the time of disclosure may violate the anti-collusion rule. Bidders should use caution in their dealings with other parties, such as members of the press, financial analysts, or others who might become a conduit for the communication of prohibited bidding information.

14. The Commission's rules do not prohibit applicants from entering into otherwise lawful bidding agreements before filing their short-form applications, as long as they disclose the existence of the agreement(s) in their short-form application. If parties agree in principle on all material terms prior to the short-form filing deadline, each party to the agreement must identify the other party or parties to the agreement on its short-form application under § 1.2105(c), even if the agreement has not been reduced to writing. If the parties have not agreed in principle by the short-form filing deadline, they should not include the names of parties to discussions on their applications, and they may not continue negotiations, discussions or communications with any other applicants after the short-form filing deadline.

15. By electronically submitting its short-form application following the electronic filing procedures set forth in Attachment C of the Auction No. 71 Procedures Public Notice, each applicant certifies its compliance with § 1.2105(c). However, the Commission cautions that merely filing a certifying statement as part of an application will not outweigh specific evidence that collusive behavior has occurred, nor will it preclude the initiation of an investigation when warranted. The Commission has stated that it intends to scrutinize carefully any instances in which bidding patterns suggest that collusion may be occurring. Any

applicant found to have violated the anti-collusion rule may be subject to sanctions.

16. Applicants are also reminded that, regardless of compliance with the Commission's rules, they remain subject to the antitrust laws, which are designed to prevent anticompetitive behavior in the marketplace. Compliance with the disclosure requirements of the Commission's anti-collusion rule will not insulate a party from enforcement of the antitrust laws. For instance, a violation of the antitrust laws could arise out of actions taking place well before any party submits a short form application. The Commission has cited a number of examples of potentially anticompetitive actions that would be prohibited under antitrust laws. The Bureau has long reminded potential applicants and others that even where the applicant discloses parties with whom it has reached an agreement on the short-form application, thereby permitting discussions with those parties, the applicant is nevertheless subject to existing antitrust laws. To the extent the Commission becomes aware of specific allegations that may give rise to violations of the federal antitrust laws, the Commission may refer such allegations to the United States Department of Justice for investigation. If an applicant is found to have violated the antitrust laws or the Commission's rules in connection with its participation in the competitive bidding process, it may be subject to forfeiture of its upfront payment, down payment, or full bid amount and may be prohibited from participating in future auctions, among other sanctions.

17. Section 1.65 of the Commission's rules requires an applicant to maintain the accuracy and completeness of information furnished in its pending application and to notify the Commission within 30 days of any substantial change that may be of decisional significance to that application. Thus § 1.65 requires an auction applicant to notify the Commission of any substantial change to the information or certifications included in its pending short-form application. Applicants are therefore required by § 1.65 to report to the Commission any communications they have made to or received from another applicant after the short-form filing deadline that affect or have the potential to affect bids or bidding strategy, unless such communications are made to or received from parties to agreements identified under § 1.2105(a)(2)(viii). Section 1.2105(c)(6) provides that any applicant that makes or receives a communication prohibited by § 1.2105(c) must report such communication to the Commission in writing immediately, and in no case later than five business days after the communication occurs.

18. Applicants that are winning bidders will be required to disclose in their long-form applications the specific terms, conditions, and parties involved in any bidding consortia, joint ventures, partnerships, and other arrangements entered into relating to the competitive bidding process.

19. A summary listing of documents issued by the Commission and the Bureau addressing the application of the anti-collusion rule may be found in Attachment F of the *Auction No. 71 Procedures Public Notice.*

iii. Incumbency Issues

20. While much of the private and common carrier fixed microwave services (FMS) operating in the 1850–1990 MHz band (and other bands) have been relocated to available frequencies in higher bands or to other media, some FMS licenses may still be operating in the band. Applicants should become familiar with the status of FMS operation and relocation, and applicable Commission rules and orders.

iv. Due Diligence

21. Potential bidders are reminded that they are solely responsible for investigating and evaluating all technical and marketplace factors that may have a bearing on the value of the broadband PCS licenses in this auction. The FCC makes no representations or warranties about the use of this spectrum for particular services. Applicants should be aware that an FCC auction represents an opportunity to become an FCC licensee in this service, subject to certain conditions and regulations. An FCC auction does not constitute an endorsement by the FCC of any particular service, technology, or product, nor does an FCC license constitute a guarantee of business success. Applicants should perform their individual due diligence before proceeding as they would with any new business venture.

22. Potential bidders are strongly encouraged to conduct their own research prior to the beginning of bidding in Auction No. 71 in order to determine the existence of any pending administrative or judicial proceedings that might affect their decision regarding participation in the auction. Participants in Auction No. 71 are strongly encouraged to continue such research throughout the auction. In addition, potential bidders should perform technical analyses sufficient to assure themselves that, should they prevail in competitive bidding for a specific license, they will be able to build and operate facilities that will fully comply with the Commission's technical and legal requirements.

23. Applicants should also be aware that certain pending and future proceedings, including applications (including those for modification), petitions for rulemaking, requests for special temporary authority, waiver requests, petitions to deny, petitions for reconsideration, informal oppositions, and applications for review, before the Commission may relate to particular applicants or incumbent licensees or the licenses available in Auction No. 71. In addition, pending and future judicial proceedings may relate to particular applicants or incumbent licensees, or the licenses available in Auction No. 71. Prospective bidders are responsible for assessing the likelihood of the various possible outcomes, and considering their potential impact on spectrum licenses available in this auction.

24. Applicants should perform due diligence to identify and consider all proceedings that may affect the spectrum licenses being auctioned and that could have an impact on the availability of spectrum for Auction No. 71. In addition, although the Commission may continue to act on various pending applications, informal objections, petitions, and other requests for Commission relief, some of these matters may not be resolved by the beginning of bidding in the auction.

25. Applicants are solely responsible for identifying associated risks and for investigating and evaluating the degree to which such matters may affect their ability to bid on, otherwise acquire, or make use of licenses available in Auction No. 71.

26. Applicants may obtain information about licenses available in Auction No. 71 through the Bureau's licensing databases at *http://wireless.fcc.gov/uls.* Applicants may query the database online and download a copy of their search results if desired.

27. The Commission makes no representations or guarantees regarding the accuracy or completeness of information in its databases or any third party databases, including, for example, court docketing systems. To the extent the Commission's databases may not include all information deemed necessary or desirable by an applicant, applicants may obtain or verify such information from independent sources or assume the risk of any incompleteness or inaccuracy in said databases. Furthermore, the Commission makes no representations

or guarantees regarding the accuracy or completeness of information that has been provided by incumbent licensees and incorporated into its databases.

28. Potential applicants are strongly encouraged to physically inspect any prospective sites located in, or near, the service area for which they plan to bid, and also to familiarize themselves with the environmental review obligations.

v. Use of Integrated Spectrum Auction System

29. The Commission will make available a browser-based bidding system to allow bidders to participate in Auction No. 71 over the Internet using the Commission's Integrated Spectrum Auction System (ISAS or FCC Auction System). The Commission makes no warranty whatsoever with respect to the FCC Auction System. In no event shall the Commission, or any of its officers, employees or agents, be liable for any damages whatsoever (including, but not limited to, loss of business profits, business interruption, loss of business information, or any other loss) arising out of or relating to the existence, furnishing, functioning or use of the FCC Auction System that is accessible to qualified bidders in connection with this auction. Moreover, no obligation or liability will arise out of the Commission's technical, programming or other advice or service provided in connection with the FCC Auction System.

vi. Bidder Alerts

30. As is the case with many business investment opportunities, some unscrupulous entrepreneurs may attempt to use Auction No. 71 to deceive and defraud unsuspecting investors. Information about deceptive telemarketing investment schemes is available from the Commission as well as the FTC and SEC. Complaints about specific deceptive telemarketing investment schemes should be directed to the FTC, the SEC, or the National Fraud Information Center.

vii. Environmental Review Requirements

31. Licensees must comply with the Commission's rules regarding implementation of the National Environmental Policy Act and other federal environmental statutes. The construction of a wireless antenna facility is a federal action and the licensee must comply with the Commission's environmental rules for each such facility. The Commission's environmental rules require, among other things, that the licensee consult with expert agencies having environmental responsibilities, including the U.S. Fish and Wildlife Service, the State Historic Preservation Office, the Army Corps of Engineers and the Federal Emergency Management Agency (through the local authority with jurisdiction over floodplains). In assessing the effect of facilities construction on historic properties, the licensee must follow the provisions of the Nationwide Programmatic Agreement Regarding the Section 106 National Historic Preservation Act Review Process. The licensee must prepare environmental assessments for facilities that may have a significant impact in or on wilderness areas, wildlife preserves, threatened or endangered species or designated critical habitats, historical or archaeological sites, Indian religious sites, floodplains, and surface features. The licensee also must prepare environmental assessments for facilities that include high intensity white lights in residential neighborhoods or excessive radio frequency emission.

*C. Auction Specifics*

i. Auction Date

32. Bidding in Auction No. 71 will begin on Wednesday, May 16, 2007, as announced in the *Auction No. 71 Comment Public Notice.* The initial schedule for bidding will be announced by public notice at least one week before the start of the auction.

33. Unless otherwise announced, bidding on all licenses will be conducted on each business day until bidding has stopped on all licenses.

ii. Auction Title

34. Auction No. 71—Broadband PCS.

iii. Bidding Methodology

35. The bidding methodology for Auction No. 71 will be simultaneous multiple round bidding. The Commission will conduct this auction over the Internet using the FCC Auction System, and telephonic bidding will be available as well. Qualified bidders are permitted to bid electronically via the Internet or by telephone. All telephone calls are recorded.

iv. Pre-Auction Dates and Deadlines

36. Dates and Deadlines

| | |
|---|---|
| Auction Seminar | March 7, 2007. |
| Short-Form Application (FCC Form 175) Filing Window Opens | March 7, 2007; 12 noon ET. |
| Short-Form Application (FCC Form 175) Filing Window Deadline | March 16, 2007; prior to 6 p.m. ET. |
| Upfront Payments (via wire transfer) | April 20, 2007; 6 p.m. ET. |
| Mock Auction | May 14, 2007. |
| Auction Begins | May 16, 2007. |

v. Requirements for Participation

37. Those wishing to participate in the auction must: (1) Submit a short-form application (FCC Form 175) electronically prior to 6 p.m. Eastern Time (ET), March 16, 2007, following the electronic filing procedures set forth in Attachment C of the *Auction No. 71 Procedures Public Notice;* (2) submit a sufficient upfront payment and an FCC Remittance Advice Form (FCC Form 159) by 6 p.m. ET, April 20, 2007, following the procedures and instructions set forth in the *Auction No. 71 Procedures Public Notice;* and (3) comply with all provisions outlined in the *Auction No. 71 Procedures Public Notice* and applicable Commission rules.

**II. Short-Form Application (FCC Form 175) Requirements**

38. Entities seeking licenses available in Auction No. 71 must file a short-form application electronically via the FCC Auction System prior to 6 p.m. ET on March 16, 2007, following the procedures prescribed in Attachment C to the *Auction No. 71 Procedures Public Notice.* If an applicant claims eligibility for a bidding credit, the information provided in its FCC Form 175 will be used in determining whether the applicant is eligible for the claimed bidding credit. Applicants bear full responsibility for submitting accurate, complete and timely short-form applications. All applicants must certify on their short-form applications under penalty of perjury that they are legally, technically, financially and otherwise qualified to hold a license. Applicants should read the instructions set forth in Attachment C to the *Auction No. 71 Procedures Public Notice* carefully and should consult the Commission's rules to ensure that, in addition to the

materials, all the information that is required under the Commission's rules is included with their short-form applications.

39. An entity may not submit more than one short-form application for a single auction. In the event that a party submits multiple short-form applications, only one application will be accepted for filing.

40. Applicants also should note that submission of a short-form application constitutes a representation by the certifying official that he or she is an authorized representative of the applicant, that he or she has read the form's instructions and certifications, and that the contents of the application, its certifications, and any attachments are true and correct. Applicants are not permitted to make major modifications to their applications; such impermissible changes include a change of the certifying official to the application. Submission of a false certification to the Commission may result in penalties, including monetary forfeitures, license forfeitures, ineligibility to participate in future auctions, and/or criminal prosecution.

*A. Eligibility for Closed Bidding*

41. In order to be eligible to bid for one or more closed C block licenses, an applicant must demonstrate that it meets the eligibility requirements of § 24.709(a) of the Commission's rules. Specifically, as of the FCC Form 175 filing deadline, the applicant, together with its affiliates and persons or entities that hold interests in the applicant and their affiliates, must have combined total assets of less than $500 million and must have had combined gross revenues of less than $125 million in each of the last two years. Every applicant that claims eligibility for closed bidding will be required to provide information regarding revenues attributable to the applicant, its affiliates, its controlling interests, and the affiliates of its controlling interests on its FCC Form 175 short-form application to establish that it satisfies the eligibility requirement.

*B. Preferences for Small Businesses and Others*

i. Size Standards for Bidding Credits

42. A bidding credit represents the amount by which a bidder's winning bid will be discounted. For Auction No. 71, bidding credits will be available to small businesses and very small businesses, and consortia thereof, as follows: (1) A bidder with attributed average annual gross revenues that exceed $15 million and do not exceed $40 million for the preceding three years (small business) will receive a 15 percent discount on its winning bid for certain C and F block licenses; (2) a bidder with attributed average annual gross revenues that do not exceed $15 million for the preceding three years (very small business) will receive a 25 percent discount on its winning bid for certain C and F block licenses.

43. Bidding credits are not cumulative; a qualifying applicant receives either the 15 percent or 25 percent bidding credit on its winning bid, but not both. No small and very small business bidding credits are provided for licenses in the A, D, and E blocks or for C block licenses available only to entrepreneurs in closed bidding.

44. Every applicant that claims eligibility for a bidding credit as either a small business or a very small business, or a consortium of small businesses or very small businesses, will be required to provide information regarding revenues attributable to the applicant, its affiliates, its controlling interests, and the affiliates of its controlling interests on its FCC Form 175 short-form application to establish that it satisfies the applicable eligibility requirement. Applicants claiming eligibility as a designated entity in Auction No. 71 should review carefully the *CSEA/Part 1 Designated Entity Second FNPRM,* 71 FR 6992, February 10, 2006 and the *CSEA/Part 1 Second Report and Order,* 71 FR 26245, May 5, 2006. In that connection, the Commission adopted rules governing eligibility for designated entity benefits in the *Designated Entity Second Report and Order.* The Commission's new rules regarding applicants seeking eligibility for designated entity benefits require the disclosure of a list of all parties with which the applicant has entered into arrangements for the lease or resale (including wholesale agreements) of any of the capacity of any of the applicant's spectrum; and a list, separately and in the aggregate, of the gross revenues of entities with which the applicant has an attributable material relationship, as defined in § 1.2110(b)(3)(iv)(B).

ii. Tribal Lands Bidding Credit

45. To encourage the growth of wireless services in federally recognized tribal lands, the Commission has implemented a tribal lands bidding credit.

iii. Installment Payments

46. Installment payment plans will not be available in Auction No. 71.

*C. License Selection*

47. In Auction No. 71, applicants must select the licenses on which they want to bid from the list of available licenses. In Auction No. 71, FCC Form 175 will include a filtering mechanism that allows an applicant to filter the available licenses. The applicant will make selections for one or more of the filter criteria and the system will produce a list of licenses satisfying the specified criteria. The applicant may select all the licenses in the customized list or select individual licenses from the list. Applicants also will be able to select licenses from one customized list and then create additional customized lists to select additional licenses. There will be no opportunity to change license selection after the short-form filing deadline. It is critically important that an applicant confirm its license selections before submitting its short-form application because the FCC Auction System will not accept bids on licenses that an applicant has not selected on its FCC Form 175.

*D. Disclosure of Bidding Arrangements*

48. Applicants will be required to identify in their short-form applications all parties with whom they have entered into any agreements, arrangements, or understandings of any kind relating to the licenses being auctioned, including any agreements relating to post-auction market structure. Applicants also will be required to certify under penalty of perjury in their short-form applications that they have not entered and will not enter into any explicit or implicit agreements, arrangements or understandings of any kind with any parties, other than those identified in the application, regarding the amount of their bids, bidding strategies, or the particular licenses on which they will or will not bid. If an applicant has had discussions, but has not reached a joint bidding agreement by the short-form application filing deadline, it would not include the names of parties to the discussions on its application and may not continue such discussions with any applicants after the deadline.

49. After the filing of short-form applications, the Commission's rules do not prohibit a party holding a non-controlling, attributable interest in one applicant from acquiring an ownership interest in or entering into a joint bidding arrangement with other applicants provided that (i) the attributable interest holder certifies that it has not and will not communicate with any party concerning the bids or bidding strategies of more than one of the applicants in which it holds an

attributable interest, or with which it has entered into a joint bidding arrangement; and (ii) the arrangements do not result in a change in control of any of the applicants. While the anti-collusion rules do not prohibit non-auction-related business negotiations among auction applicants, applicants are reminded that certain discussions or exchanges could touch upon impermissible subject matters because they may convey pricing information and bidding strategies. Further compliance with the disclosure requirements of the Commission's anti-collusion rule will not insulate a party from enforcement of the antitrust laws.

*E. Ownership Disclosure Requirements*

50. All applicants must comply with the uniform part 1 ownership disclosure standards and provide information required by §§ 1.2105 and 1.2112 of the Commission's rules. Specifically, in completing the short-form application, applicants will be required to fully disclose information on the real party or parties-in-interest and ownership structure of the applicant. The ownership disclosure standards for the short form are prescribed in §§ 1.2105 and 1.2112 of the Commission's rules. Each applicant is responsible for information submitted in its short-form application being complete and accurate.

51. An applicant's most current ownership information on file with the Commission, if in an electronic format compatible with the short-form application (FCC Form 175) (such as information submitted in an online FCC Form 602 or in an FCC Form 175 filed for a previous auction using ISAS) will automatically be entered into the applicant's short-form application. Applicants are responsible for ensuring that the information submitted in their FCC Form 175 for Auction No. 71 is complete and accurate. Accordingly, applicants should carefully review any information automatically entered to confirm that it is complete and accurate as of the deadline for filing the short-form application. Applicants can update any information that was entered automatically and needs to be changed directly in the short-form application.

*F. Entrepreneur Revenue Disclosures*

52. To determine which entities qualify as entrepreneurs for closed bidding, the Commission considers the total assets and gross revenues of the applicant, its controlling interest holders, the affiliates of the applicant, and their controlling interests holders. The Commission does not impose specific entity requirements on parties with controlling interests. Once principals or entities with a controlling interest are determined, only the assets and revenues of those principals or entities, the applicant, and their affiliates will be counted in determining entrepreneur eligibility. Therefore, entities applying to bid on closed licenses will be required to disclose on their FCC Form 175 short-form applications, separately and in the aggregate, the gross revenues for the preceding two years and the total assets of each of the following: (1) The applicant, (2) the applicant's affiliates, (3) the applicant's controlling interest holders, and (4) the affiliates of the applicant's controlling interest holders. Certification that the gross revenues for each of the preceding two years or the total assets do not exceed the applicable limit is not sufficient. In order to comply with the Commission's disclosure requirements for entrepreneur eligibility, an applicant must provide separately for itself, its affiliates, its controlling interests holders, and their affiliates, the gross revenues for each of the preceding two years. Applicants for closed bidding in Auction No. 71 should not include existing C and F block licenses in their calculations of total assets; however, all other Commission licenses must be included in such calculations.

*G. Bidding Credit Revenue Disclosures*

53. To determine which applicants qualify for bidding credits as small businesses or very small businesses, the Commission considers the gross revenues of the applicant, its affiliates, its controlling interests, and the affiliates of its controlling interests. Therefore, entities applying to bid as small businesses or very small businesses (or consortia of small businesses or very small businesses) will be required to disclose on their FCC Form 175 short-form applications the gross revenues of each of the following for the preceding three years: (1) The applicant, (2) its affiliates, (3) its controlling interests, and (4) the affiliates of its controlling interests. Certification that the average annual gross revenues of such entities and individuals for the preceding three years do not exceed the applicable limit is not sufficient. In order to comply with the Commission's disclosure requirements for bidding credit eligibility, an applicant must provide separately for itself, its affiliates, its controlling interests, and the affiliates of its controlling interests, the gross revenues for each of the preceding three years. If the applicant is applying as a consortium of small businesses or very small businesses, this information must be provided for each consortium member.

54. Controlling interests of an applicant include individuals and entities with either *de facto* or *de jure* control of the applicant. Typically, ownership of at least 50.1 percent of an entity's voting stock evidences *de jure* control. *De facto* control is determined on a case-by-case basis. The following are some common indicia of de facto control: (1) The entity constitutes or appoints more than 50 percent of the board of directors or management committee; (2) the entity has authority to appoint, promote, demote, and fire senior executives that control the day-to-day activities of the licensee; and (3) the entity plays an integral role in management decisions.

55. Officers and directors of an applicant are also considered to have a controlling interest in the applicant. The Commission does not impose specific equity requirements on controlling interest holders. Once the principals or entities with a controlling interest are determined, only the revenues of those principals or entities, the affiliates of those principals or entities, and the applicant and its affiliates will be counted in determining small business eligibility.

56. In recent years the Commission has made modifications to its rules governing the attribution of gross revenues for purposes of determining small business eligibility. These changes include exempting the gross revenues of the affiliates of a rural telephone cooperative's officers and directors from attribution to the applicant if certain specified conditions are met. The Commission has also clarified that, in calculating an applicant's gross revenues under the controlling interest standard, it will not attribute the personal net worth, including personal income, of its officers and directors to the applicant.

57. A consortium of small businesses or very small businesses is a conglomerate organization composed of two or more entities, each of which individually satisfies the definition of a small business or very small business as those terms are defined in the service-specific rules. Thus, each member of a consortium of small or very small businesses that applies to participate in Auction No. 71 must individually meet the definition of a small business or a very small business adopted by the Commission for broadband PCS. Each consortium member must disclose its gross revenues along with those of its affiliates, its controlling interests, and the affiliates of its controlling interests.

Although the gross revenues of the consortium members will not be aggregated for purposes of determining the consortium's eligibility as a small business or very small business, this information must be provided to ensure that each individual consortium member qualifies for any bidding credit awarded to the consortium.

*H. Provisions Regarding Former and Current Defaulters*

58. Each applicant must state under penalty of perjury on its short-form application whether or not the applicant, its affiliates, its controlling interests, and the affiliates of its controlling interests, as defined by § 1.2110, have ever been in default on any Commission licenses or have ever been delinquent on any non-tax debt owed to any Federal agency. In addition, each applicant must certify under penalty of perjury on its short-form application that as of the short-form filing deadline, the applicant, its affiliates, its controlling interests, and the affiliates of its controlling interests, as defined by § 1.2110, are not in default on any payment for Commission licenses (including down payments) and that they are not delinquent on any non-tax debt owed to any Federal agency. Prospective applicants are reminded that submission of a false certification to the Commission is a serious matter that may result in severe penalties, including monetary forfeitures, license revocations, exclusion from participation in future auctions, and/or criminal prosecution.

59. Former defaulters—i.e., applicants, including any of their affiliates, any of their controlling interests, or any of the affiliates of their controlling interests, that in the past have defaulted on any Commission licenses or been delinquent on any non-tax debt owed to any Federal agency, but that have since remedied all such defaults and cured all of their outstanding non-tax delinquencies—are eligible to bid in Auction No. 71, provided that they are otherwise qualified. However former defaulters are required to pay upfront payments that are fifty percent more than the normal upfront payment amounts.

60. Current defaulters—i.e., applicants, including any of their affiliates, any of their controlling interests, or any of the affiliates of their controlling interests, that are in default on any payment for any Commission licenses (including down payments) or are delinquent on any non-tax debt owed to any Federal agency as of the filing deadline for applications to participate in this auction—are not eligible to bid in Auction No. 71.

61. Applicants are encouraged to review the Bureau's previous guidance on default and delinquency disclosure requirements in the context of the short-form application process. For example, it has been determined that to the extent that Commission rules permit late payment of regulatory or application fees accompanied by late fees, such debts will become delinquent for purposes of §§ 1.2105(a) and 1.2106(a) only after the expiration of a final payment deadline. Therefore, with respect to regulatory or application fees, the provisions of §§ 1.2105(a) and 1.2106(a) regarding default and delinquency in connection with competitive bidding are limited to circumstances in which the relevant party has not complied with a final Commission payment deadline.

62. The Commission considers outstanding debts owed to the United States Government, in any amount, to be a serious matter. The Commission adopted rules, including a provision referred to as the red light rule, that implement the Commission's obligations under the Debt Collection Improvement Act of 1996, which governs the collection of claims owed to the United States. Under the red light rule, the Commission will not process applications and other requests for benefits filed by parties that have outstanding debts owed to the Commission. In the same rulemaking order, the Commission explicitly declared, however, that the Commission's competitive bidding rules are not affected by the red light rule. As a consequence, the Commission's adoption of the red light rule does not alter the applicability of any of the Commission's competitive bidding rules, including the provisions and certifications of §§ 1.2105 and 1.2106, with regard to current and former defaults or delinquencies. Applicants are reminded, however, that the Commission's Red Light Display System, which provides information regarding debts owed to the Commission, may not be determinative of an auction applicant's ability to comply with the default and delinquency disclosure requirements of § 1.2105. Thus, while the red light rule ultimately may prevent the processing of long-form applications by auction winners, an auction applicant's red light status is not necessarily determinative of its eligibility to participate in this auction or of its upfront payment obligation.

63. Prospective applicants in Auction No. 71 should note that any long-form applications filed after the close of competitive bidding will be reviewed for compliance with the Commission's red light rule, and such review may result in the dismissal of a winning bidder's long-form application.

*I. Other Information*

64. Applicants owned by member of minority groups and/or women, as defined in § 1.2110(c)(3), may identify themselves in filling out their short-form applications regarding this status. This applicant status information is collected for statistical purposes only and assists the Commission in monitoring the participation of designated entities in its auctions.

*J. Minor Modifications to Short-Form Applications (FCC Form 175)*

65. As of the deadline for filing short-form applications (FCC Forms 175) prior to 6 p.m. ET on March 16, 2007, applicants are permitted to make only minor changes to their applications. Applicants are not permitted to make major modifications to their applications (*e.g.*, change their license selections, change control of the applicant, change the certifying official, or change their size to claim eligibility for a higher bidding credit). Permissible minor changes include, for example, deletion and addition of authorized bidders (to a maximum of three) and revision of addresses and telephone numbers of the applicants and their contact persons.

66. Any application amendment and related statements of fact must be certified by:

(1) The applicant, if the applicant is an individual, (2) one of the partners if the applicant is a partnership, (3) an officer, director, or duly authorized employee, if the applicant is a corporation, (4) by a member who is an officer, if the applicant is an unincorporated association, (5) the trustee if the applicant is an amateur radio service club, or (6) a duly elected or appointed official who is authorized to make such certifications under the laws of the applicable jurisdiction, if the applicant is a governmental entity.

67. An applicant must make permissible minor changes to its short-form application, as such changes are defined by § 1.2105(b), electronically using the FCC Auction System. Applicants must click on the SUBMIT button in the FCC Auction System for the changes to be submitted and considered by the Commission. After the revised application has been submitted, a confirmation page will be displayed that states the submission

time and date, along with a unique file number.

68. In addition, an applicant should submit a letter briefly summarizing the changes and subsequently update their short-form applications in ISAS as soon as possible. Note: After the filing window has closed, the auction system will not permit applicants to make certain changes, such as legal classification and bidding credit. Any letter describing changes to an applicant's short-form application should be submitted by electronic mail to the following address: *auction71@fcc.gov.*

69. Applicants must not submit application-specific material through the Commission's Electronic Comment Filing System (ECFS).

*K. Maintaining Current Information in Short-Form Applications (FCC Form 175)*

70. Section 1.65 of the Commission's rules requires an applicant to maintain the accuracy and completeness of information furnished in its pending application and to notify the Commission within 30 days of any substantial change that may be of decisional significance to that application. Changes that cause a loss of or reduction in eligibility for a bidding credit must be reported immediately. If an amendment reporting substantial changes is a major amendment as defined by § 1.2105, the major amendment will not be accepted and may result in the dismissal of the short-form application.

71. After the short-form filing deadline, applicants may make only minor changes to their FCC Form 175 applications, for example, deletion and addition of authorized bidders (to a maximum of three). Applicants must click on the SUBMIT button in the FCC Auction System for the changes to be submitted and considered by the Commission. In addition, applicants must submit a letter, briefly summarizing the changes, by electronic mail at the following address: *auction71@fcc.gov.* The electronic mail summarizing the changes must include a subject or caption referring to Auction No. 71 and the name of the applicant.

72. Applicants must not submit application-specific material through ECFS into the record of the proceeding concerning Auction No. 71 procedures.

**III. Pre-Auction Procedures**

*A. Auction Seminar—March 7, 2007*

73. On Wednesday, March 7, 2007, the FCC will sponsor a seminar for parties interested in participating in Auction No. 71 at the FCC headquarters, located at 445 12th Street, SW., Washington, DC. The seminar will provide attendees with information about pre-auction procedures, completing FCC Form 175, auction conduct, the FCC Auction System, auction rules, and the broadband PCS rules. The seminar will also provide an opportunity for prospective bidders to ask questions of FCC staff concerning the auction, auction procedures, filing requirements and other matters related to this auction.

74. To register, please provide the information listed on Attachment B of the *Auction No. 71 Procedures Public Notice* by Monday, March 5, 2007. Registrations are accepted on a first-come, first-served basis. The seminar is free of charge. For individuals who are unable to attend, an Audio/Video webcast of this seminar will be available from the FCC's Auction No. 71 Web page at *http://wireless.fcc.gov/auctions/71/.*

*B. Short-Form Application (FCC Form 175)—Due Prior to 6 p.m. ET on March 16, 2007*

75. In order to be eligible to bid in this auction, applicants must first follow the procedures set forth in Attachment C to the *Auction No. 71 Procedures Public Notice* to submit an FCC Form 175 application electronically via the FCC Auction System. This application must be received at the Commission prior to 6 p.m. ET on March 16, 2007. Late applications will not be accepted. There is no application fee required when filing an FCC Form 175. However, to be eligible to bid, an applicant must submit an upfront payment.

76. Applications may generally be filed at any time beginning at noon ET on March 7, 2007, and the filing window will close at 6 p.m. ET on March 16, 2007. Applicants are strongly encouraged to file early and are responsible for allowing adequate time for filing their applications. Applicants may update or amend their applications multiple times until the filing deadline on March 16, 2007.

77. Applicants must always click on the SUBMIT button on the Certify & Submit screen of the electronic form to successfully submit or modify their FCC Form 175. Any form that is not submitted will not be reviewed by the FCC. Additional information about accessing, completing, and viewing the FCC Form 175 is included in Attachment C of the *Auction No. 71 Procedures Public Notice*. FCC Auctions Technical Support is available at (877) 480–3201, option nine; (202) 414–1250; or (202) 414–1255 (text telephone (TTY)); hours of service are Monday through Friday, from 8 a.m. to 6 p.m. E.T. In order to provide better service to the public, all calls to Technical Support are recorded.

*C. Application Processing and Minor Corrections*

78. After the deadline for filing the FCC Form 175 applications has passed, the FCC will process all timely submitted applications to determine which are acceptable for filing, and subsequently will issue a public notice identifying: (1) Those applications accepted for filing; (2) those applications rejected; and (3) those applications which have minor defects that may be corrected, and the deadline for resubmitting corrected applications.

79. As described more fully in the Commission's rules, after the March 16, 2007, short-form filing deadline, applicants may make only minor corrections to their FCC Form 175 applications. Applicants will not be permitted to make major modifications to their applications (*e.g.*, change their license selections, change control of the applicant, change certifying official, or change their size to claim eligibility for a higher bidding credit).

*D. Upfront Payments—Due April 20, 2007*

80. In order to be eligible to bid in the auction, applicants must submit an upfront payment accompanied by an FCC Remittance Advice Form (FCC Form 159). After completing the FCC Form 175, filers will have access to an electronic version of the FCC Form 159 that can be printed and sent by facsimile to Mellon Bank in Pittsburgh, PA. All upfront payments must be sent by wire transfer and received in the proper account at Mellon Bank by 6 p.m. ET on April 20, 2007.

i. Making Auction Payments by Wire Transfer

81. Wire transfer payments must be received by 6 p.m. ET on April 20, 2007. To avoid untimely payments, applicants should discuss arrangements (including bank closing schedules) with their banker several days before they plan to make the wire transfer, and allow sufficient time for the transfer to be initiated and completed before the deadline.

82. At least one hour before placing the order for the wire transfer (but on the same business day), applicants must send by facsimile a completed FCC Form 159 (Revised 2/03) to Mellon Bank. On the cover sheet of the facsimile, write Wire Transfer—Auction Payment for Auction No. 71. In order to

meet the Commission's upfront payment deadline, an applicant's payment must be credited to the Commission's account before the deadline. Applicants are responsible for obtaining confirmation from their financial institution that Mellon Bank has timely received their upfront payment and deposited it in the proper account.

83. Please note that: (1) All payments must be made in U.S. dollars; (2) all payments must be made by wire transfer; (3) upfront payments for Auction No. 71 go to a lockbox number different from the lockboxes used in previous FCC auctions, and different from the lockbox number to be used for post-auction payments and (4) failure to deliver the upfront payment as instructed by the April 20, 2007, deadline, will result in dismissal of the application and disqualification from participation in the auction.

ii. FCC Form 159

84. A completed FCC Remittance Advice Form (FCC Form 159, Revised 2/03) must be sent by facsimile to Mellon Bank to accompany each upfront payment. Proper completion of FCC Form 159 (Revised 2/03) is critical to ensuring correct crediting of upfront payments. Detailed instructions for completion of FCC Form 159 are included in Attachment D to the *Auction No. 71 Procedures Public Notice.* An electronic pre-filled version of the FCC Form 159 is available after submitting the FCC Form 175. Payors using a pre-filled FCC Form 159 are responsible for ensuring that all of the information on the form, including payment amounts, is accurate. The FCC Form 159 can be completed electronically, but must be filed with Mellon Bank via facsimile.

iii. Upfront Payments and Bidding Eligibility

85. In the *Auction No. 71 Comment Public Notice,* the Bureau proposed that the amount of the upfront payment would determine a bidder's initial bidding eligibility, the maximum number of bidding units on which a bidder may place bids. In order to bid on a license, otherwise qualified bidders that selected that license on Form 175 must have a current eligibility level that meets or exceeds the number of bidding units assigned to that license. At a minimum, therefore, an applicant's total upfront payment must be enough to establish eligibility to bid on at least one of the licenses selected on its Form 175, or else the applicant will not be eligible to participate in the auction. An applicant does not have to make an upfront payment to cover all licenses the applicant selected on its Form 175, but rather to cover the maximum number of bidding units that are associated with licenses on which the bidder wishes to place bids and hold provisionally winning bids at any given time. A qualified bidder's maximum eligibility will not exceed the sum of the bidding units associated with the total number of licenses selected on its FCC Form 175 application. In some cases a qualified bidder's maximum eligibility may be less than the amount of its upfront payment because the qualified bidder has either previously been in default on a Commission license or delinquent on a non-tax debt owed to a Federal Agency, or has submitted an upfront payment that exceeds the total amount of bidding units associated with the licenses selected on its FCC Form 175 application.

86. In the *Auction No. 71 Comment Public Notice,* the Bureau proposed to calculate upfront payments for Auction No. 71 on a license-by-license basis using the following formula based on bandwidth and license area population: $0.05 * MHz * License Area Population with a minimum of $500 per license. The Bureau set forth the specific upfront payments and bidding units for each license in Attachment A of the *Auction No. 71 Comment Public Notice* and sought comment on this proposal. The Bureau received no comments in response to the proposed upfront payments. The specific upfront payments and bidding units for each license are set forth in Attachment A of the *Auction No. 71 Procedures Public Notice.*

87. Applicants must make upfront payments sufficient to obtain bidding eligibility on the licenses on which they will bid.

88. In calculating its upfront payment amount, an applicant should determine the maximum number of bidding units on which it may wish to be active (bid on or hold provisionally winning bids on) in any single round, and submit an upfront payment amount covering that number of bidding units. In order to make this calculation, an applicant should add together the upfront payments for all licenses on which it seeks to be active in any given round. Applicants should check their calculations carefully, as there is no provision for increasing a bidder's eligibility after the upfront payment deadline.

89. Former defaulters should calculate their upfront payment for all licenses by multiplying the number of bidding units on which they wish to be active by 1.5. In order to calculate the number of bidding units to assign to former defaulters, the Commission will divide the upfront payment received by 1.5 and round the result up to the nearest bidding unit.

iv. Applicant's Wire Transfer Information for Purposes of Refunds of Upfront Payments

90. To ensure that refunds of upfront payments are processed in an expeditious manner, the Commission is requesting that all pertinent information listed in the *Auction No. 71 Procedures Public Notice* supplied to the FCC. All refunds will be returned to the payer of record as identified on the FCC Form 159 unless the payer submits written authorization instructing otherwise.

*E. Auction Registration*

91. Approximately ten days before the auction, the FCC will issue a public notice announcing all qualified bidders for the auction. Qualified bidders are those applicants whose FCC Form 175 applications have been accepted for filing and have timely submitted upfront payments sufficient to make them eligible to bid.

92. All qualified bidders are automatically registered for the auction. Registration materials will be distributed prior to the auction by overnight mail. The mailing will be sent only to the contact person at the contact address listed in the FCC Form 175 and will include the SecurID® tokens that will be required to place bids, the Integrated Spectrum Auction System (ISAS) Bidder's Guide, and the Auction Bidder Line phone number.

93. Qualified bidders that do not receive this registration mailing will not be able to submit bids. Therefore, any qualified bidder that has not received this mailing by noon on Thursday, May 10, 2007, should call (717) 338–2868. Receipt of this registration mailing is critical to participating in the auction, and each applicant is responsible for ensuring it has received all of the registration material.

94. In the event that SecurID® tokens are lost or damaged, only a person who has been designated as an authorized bidder, the contact person, or the certifying official on the applicant's short-form application may request replacement registration material.

*F. Remote Electronic Bidding*

95. The Commission will conduct this auction over the Internet, and telephonic bidding will be available as well. Qualified bidders are permitted to bid electronically and telephonically. Each applicant should indicate its bidding preference—electronic or telephonic—on the FCC Form 175. In

either case, each authorized bidder must have its own SecurID® token, which the FCC will provide at no charge. Each applicant with one authorized bidder will be issued two SecurID® tokens, while applicants with two or three authorized bidders will be issued three tokens. For security purposes, the SecurID® tokens, the telephonic bidding telephone number, and the Integrated Spectrum Auction System (ISAS) Bidder's Guide are only mailed to the contact person at the contact address listed on the FCC Form 175.

*G. Mock Auction—May 14, 2007*

96. All qualified bidders will be eligible to participate in a mock auction on Monday, May 14, 2007. The mock auction will enable applicants to become familiar with the FCC Auction System prior to the auction. Participation by all bidders is strongly recommended. Details will be announced by public notice.

**IV. Auction Event**

97. The first round of bidding for Auction No. 71 will begin on Wednesday, May 16, 2007. The initial bidding schedule will be announced in a public notice listing the qualified bidders, which is to be released approximately 10 days before the start of the auction.

*A. Auction Structure*

i. Simultaneous Multiple Round Auction

98. In the *Auction No. 71 Comment Public Notice,* the Bureau proposed to auction all licenses in Auction No. 71 in a single auction using the Commission's standard simultaneous multiple-round (SMR) auction format. This type of auction offers every license for bid at the same time and consists of successive bidding rounds in which eligible bidders may place bids on individual licenses. A bidder may bid on, and potentially win, any number of licenses. Typically, bidding remains open on all licenses until bidding stops on every license, unless a modified stopping rule is invoked.

99. The standard SMR auction format will meet the needs of bidders in Auction No. 71. The Bureau will use a simultaneous multiple-round auction format without package bidding. Unless otherwise announced, bids will be accepted on all licenses in each round of the auction until bidding stops on every license. This approach, the Commission believes, allows bidders to take advantage of synergies that exist among licenses.

ii. Information Available to Bidders Before and During the Auction

100. In the *Auction No. 71 Comment Public Notice,* the Bureau sought comment on whether to implement procedures that prior to and during the auction would limit the disclosure of information on bidder interests and identities. The Commission received no comments on this issue.

101. For Auction No. 71, the Commission will use limited information procedures if it appears likely that the competitiveness of the auction will be low, and if the Commission believes that limited information procedures will be effective in making anti-competitive behavior less likely to be successful. Alternatively, if the Commission determines that the auction is likely to be sufficiently competitive, and therefore, that the risk of successful collusion is low, the Commission will not implement procedures that would limit the disclosure of information on bidder interest and identities before the close of bidding.

102. Specifically, the Commission will estimate the likely level of competition in the auction by considering the eligibility ratio, defined as the total number of bidding units of eligibility purchased by bidders through their upfront payments divided by the total number of bidding units for the licenses in the auction. If the eligibility ratio equals or exceeds three, the Commission will not use limited information procedures. If the eligibility ratio is less than three, in general the Commission will withhold certain information on bidder interest and bidder identities prior to and during the auction.

103. However, if the eligibility ratio is less than three, the Commission reserves the discretion not to use limited information procedures if circumstances indicate that limited information procedures would be not be an effective tool for deterring anti-competitive behavior. For example, if only two applicants become qualified to participate in the bidding, limited information procedures would be ineffective in preventing bidders from knowing the identity of the competing bidder and, therefore, limited information procedures would not serve to deter attempts at signaling and retaliatory bidding behavior. The Commission anticipates announcing the information disclosure procedures to be used at or about the time that the Commission releases a public notice announcing the applicants that are qualified to participate in the bidding.

104. If the Commission determines that limited information procedures will be used, it will make available prior to the auction the total eligibility level for the auction as well as the eligibility of each bidder but will not identify bidders' license selections. After each round of bidding, the amounts of each bid placed will be made available, but not the identities of the bidders. This information will give bidders an indication of demand for the licenses, so that bidders and their investors will be able to assess whether their bids are likely to be consistent with the valuations of other bidders, mitigating fear of the winner's curse. In addition, after each round bidders logged in to the FCC Auction System will be able to see whether their own bids are provisionally winning.

105. *Other Issues.* The Commission does not believe that the information disclosure procedures established for this auction will interfere with the administration of or compliance with the Commission's anti-collusion rule. Section 1.2105(c)(1) of the Commission's rules provides that after the short-form application filing deadline, all applicants for licenses in any of the same geographic license areas are prohibited from disclosing to each other in any manner the substance of bids or bidding strategies until after the down payment deadline, subject to specified exceptions. When limited information procedures are not in effect for a particular auction, each applicant's selection of licenses has been publicly available through the Commission's on-line short-form application database. In Auction No. 71, however, the Commission will not disclose information regarding license selection at least until the upfront payment deadline has passed and the Commission determines the information disclosure procedures to be used for the auction. As in the past, the Commission will disclose the other portions of applicants' short-form applications, through its on-line database and certain application-based information through public notices. Thus, even without information regarding license selection, applicants would be able to comply with § 1.2105(c) by not disclosing bids or bidding strategies to any other applicants in the auction. This approach, however, could inhibit otherwise lawful communications with applicants for licenses in other geographic license areas, which the Commission's rule permits. Consequently, the Bureau will notify separately each applicant with short-form applications to participate in a

pending auction whether applicants in Auction No. 71 have applied for licenses in any of the same geographic areas as that applicant. Specifically, after the Bureau conducts its initial review of applications to participate in Auction No. 71, each applicant with a pending short-form application will receive a letter that lists the other applicants in Auction No. 71 that have applied for licenses in any of the same geographic areas as the applicant. The list will identify the Auction No. 71 applicant(s) by name but will not list the license selections of the Auction No. 71 applicant(s). As in past auctions, additional information regarding applicants in Auction No. 71 that is needed to comply with § 1.2105(c), e.g., the identities of controlling interest in the applicant and ownership interests greater than ten percent, will be available through the publicly accessible on-line short-form application database.

iii. Eligibility and Activity Rules

106. In the *Auction No. 71 Comment Public Notice,* the Bureau proposed that the amount of the upfront payment submitted by a bidder would determine the initial (maximum) eligibility (as measured in bidding units) for each bidder. The Commission received no comments on this issue.

107. The Commission will use upfront payments to determine initial (maximum) eligibility (as measured in bidding units) for Auction No. 71. The amount of the upfront payment submitted by a bidder determines initial bidding eligibility, the maximum number of bidding units on which a bidder may be active. Each license is assigned a specific number of bidding units listed in Attachment A of the *Auction No. 71 Procedures Public Notice.* Bidding units for a given license do not change as prices rise during the auction. A bidder's upfront payment is not attributed to specific licenses. Rather, a bidder may place bids on any of the licenses selected on its FCC Form 175 as long as the total number of bidding units associated with those licenses does not exceed its current eligibility. Eligibility cannot be increased during the auction; it can only remain the same or decrease. Thus, in calculating its upfront payment amount, an applicant must determine the maximum number of bidding units it may wish to bid on or hold provisionally winning bids on in any single round, and submit an upfront payment amount covering that total number of bidding units. The total upfront payment does not affect the total dollar amount a bidder may bid on any given license.

108. In order to ensure that an auction closes within a reasonable period of time, an activity rule requires bidders to bid actively throughout the auction, rather than wait until late in the auction before participating. Bidders are required to be active on a specific percentage of their current bidding eligibility during each round of the auction.

109. A bidder's activity level in a round is the sum of the bidding units associated with licenses on which the bidder is active. A bidder is considered active on a license in the current round if it is either the provisionally winning bidder at the end of the previous bidding round and does not withdraw the provisionally winning bid in the current round, or if it submits a bid in the current round. The minimum required activity is expressed as a percentage of the bidder's current eligibility, and increases by stage as the auction progresses. Because these procedures have proven successful in maintaining the pace of previous auctions, the Commission adopts them for Auction No. 71. Failure to maintain the requisite activity level will result in the use of an activity rule waiver, if any remain, or a reduction in the bidder's eligibility, possibly curtailing or eliminating the bidder's ability to place bids in the auction.

iv. Auction Stages

110. In the *Auction No. 71 Comment Public Notice*, the Bureau proposed to conduct the auction in two stages and employ an activity rule. The Bureau further proposed that, in each round of Stage One, a bidder desiring to maintain its current bidding eligibility would be required to be active on licenses representing at least 80 percent of its current bidding eligibility. Finally, the Bureau proposed that in each round of Stage Two, a bidder desiring to maintain its current bidding eligibility would be required to be active on at least 95 percent of its current bidding eligibility. The Commission received no comments on this proposal.

111. The Commission adopts the proposals for the activity rules and stages. Below are the activity levels for each stage of the auction. The Bureau reserves the discretion to further alter the activity percentages before and/or during the auction.

112. *Stage One:* During the first stage of the auction, a bidder desiring to maintain its current bidding eligibility will be required to be active on licenses representing at least 80 percent of its current bidding eligibility in each bidding round. Failure to maintain the required activity level will result in the use of an activity rule waiver or, if the bidder has no activity rule waivers remaining, a reduction in the bidder's bidding eligibility in the next round. During Stage One, reduced eligibility for the next round will be calculated by multiplying the bidder's current round activity (the sum of bidding units of the bidder's provisionally winning bids and bids during the current round) by five-fourths (5/4).

113. *Stage Two:* During the second stage of the auction, a bidder desiring to maintain its current bidding eligibility is required to be active on 95 percent of its current bidding eligibility. Failure to maintain the required activity level will result in the use of an activity rule waiver or, if the bidder has no activity rule waivers remaining, a reduction in the bidder's bidding eligibility in the next round. During Stage Two, reduced eligibility for the next round will be calculated by multiplying the bidder's current round activity (the sum of bidding units of the bidder's provisionally winning bids and bids during the current round) by twenty-nineteenths (20/19).

114. *CAUTION:* Since activity requirements increase in Stage Two, bidders must carefully check their activity during the first round following a stage transition to ensure that they are meeting the increased activity requirement. This is especially critical for bidders that have provisionally winning bids and do not plan to submit new bids. In past auctions, some bidders have inadvertently lost bidding eligibility or used an activity rule waiver because they did not re-verify their activity status at stage transitions. Bidders may check their activity against the required activity level by logging into the FCC Auction System.

115. Because the foregoing procedures have proven successful in maintaining the proper pace in previous auctions, the Commission adopts them for Auction No. 71.

v. Stage Transitions

116. In the *Auction No. 71 Comment Public Notice*, the Bureau proposed that the auction would generally advance to the next stage (i.e., from Stage One to Stage Two) when the auction activity level, as measured by the percentage of bidding units receiving new provisionally winning bids, is approximately 20 percent or lower for three consecutive rounds of bidding. The Bureau further proposed that it would retain the discretion to change stages unilaterally by announcement during the auction. This determination,

the Bureau proposed, would be based on a variety of measures of bidder activity, including, but not limited to, the auction activity level, the percentages of licenses (as measured in bidding units) on which there are new bids, the number of new bids, and the percentage increase in revenue. The Commission received no comments on this issue.

117. The Commission adopts the proposal. Thus, the auction will start in Stage One and will generally advance to Stage Two when, in each of three consecutive rounds of bidding, the provisionally winning bids have been placed on 20 percent or less of the licenses being auctioned (as measured in bidding units). In addition, the Bureau will retain the discretion to regulate the pace of the auction by announcement. This determination will be based on a variety of measures of bidder activity, including, but not limited to, the auction activity level, the percentages of licenses (as measured in bidding units) on which there are new bids, the number of new bids, and the percentage increase in revenue. The Commission believes that these stage transition rules, having proven successful in prior auctions, are appropriate for use in Auction No. 71.

vi. Activity Rule Waivers

118. In the *Auction No. 71 Comment Public Notice*, the Bureau proposed that each bidder in the auction be provided with three activity rule waivers. The Commission received no comments on this issue. Therefore, the Commission adopts the proposal that each bidder be provided three activity rule waivers. The Commission is satisfied that providing three waivers over the course of the auction will give bidders a sufficient number of waivers and flexibility, while also safeguarding the integrity of the auction.

119. Bidders may use an activity rule waiver in any round during the course of the auction. Use of an activity rule waiver preserves the bidder's current bidding eligibility despite the bidder's activity in the current round being below the required minimum activity level. An activity rule waiver applies to an entire round of bidding and not to a particular license. Activity rule waivers can be either applied proactively by the bidder (a proactive waiver) or applied automatically by the FCC Auction System (an automatic waiver) and are principally a mechanism for auction participants to avoid the loss of bidding eligibility in the event that exigent circumstances prevent them from placing a bid in a particular round.

120. The FCC Auction System assumes that bidders with insufficient activity would prefer to apply an activity rule waiver (if available) rather than lose bidding eligibility. Therefore, the system will automatically apply a waiver at the end of any bidding round where a bidder's activity level is below the minimum required unless: (1) There are no activity rule waivers available; or (2) the bidder overrides the automatic application of a waiver by reducing eligibility. If a bidder has no waivers remaining and does not satisfy the activity requirement, the FCC Auction System will permanently reduce the bidder's eligibility, possibly curtailing or eliminating the bidder's ability to place additional bids in the auction.

121. A bidder with insufficient activity that wants to reduce its bidding eligibility rather than use an activity rule waiver must affirmatively override the automatic waiver mechanism during the bidding round by using the reduce eligibility function in the FCC Auction System. In this case, the bidder's eligibility is permanently reduced to bring the bidder into compliance with the activity rules. Once eligibility has been reduced, a bidder will not be permitted to regain its lost bidding eligibility even if the round has not yet closed.

122. Finally, a bidder may apply an activity rule waiver proactively as a means to keep the auction open without placing a bid. If a bidder proactively applies an activity waiver (using the apply waiver function in the FCC Auction System) during a bidding round in which no bids are placed or withdrawn, the auction will remain open and the bidder's eligibility will be preserved. However, an automatic waiver applied by the FCC Auction System in a round in which there are no new bids, withdrawals, or proactive waivers will not keep the auction open. A bidder cannot submit a proactive waiver after submitting a bid in a round, and submitting a proactive waiver will preclude a bidder from placing any bids in that round. Note: Applying a waiver is irreversible; once a proactive waiver is submitted that waiver cannot be unsubmitted, even if the round has not yet closed.

vii. Auction Stopping Rules

123. For Auction No. 71, the Bureau proposed to employ a simultaneous stopping rule approach. A simultaneous stopping rule means that all licenses remain available for bidding until bidding closes simultaneously on all licenses. More specifically, bidding will close simultaneously on all licenses after the first round in which no bidder submits any new bids, applies a proactive waiver, or withdraws any provisionally winning bids.

124. The Bureau also sought comment on a modified version of the simultaneous stopping rule (modified stopping rule). The modified stopping rule would close the auction for all licenses after the first round in which no bidder applies a proactive waiver, withdraws a provisionally winning bid, or places any new bids on any license on which it is not the provisionally winning bidder. Thus, absent any other bidding activity, a bidder placing a new bid on a license for which it is the provisionally winning bidder would not keep the auction open under this modified stopping rule.

125. The Bureau further proposed retaining the discretion to keep the auction open even if no bidder places any new bids, applies a proactive waiver, or withdraws any provisionally winning bids in a round. In this event, the effect will be the same as if a bidder had applied a waiver. Thus, the activity rule will apply as usual, and a bidder with insufficient activity will either use an activity rule waiver (if it has any left) or lose bidding eligibility.

126. In addition, the Bureau proposed that it reserve the right to declare that the auction will end after a specified number of additional rounds (special stopping rule). If the Bureau invokes this special stopping rule, it will accept bids in the specified final round(s) and the auction will close.

127. The Bureau proposed to exercise these options only in circumstances such as where the auction is proceeding very slowly, where there is minimal overall bidding activity or where it appears likely that the auction will not close within a reasonable period of time. The Bureau noted that before exercising these options, the Bureau is likely to attempt to increase the pace of the auction by, for example, increasing the number of bidding rounds per day, and/or changing the minimum acceptable bids.

128. The Commission believes that the proposed stopping rules are appropriate for Auction No. 71 because the Commission's experience in prior auctions demonstrates that these stopping rules balance interests of administrative efficiency and maximum bidder participation. The Commission received no comments concerning the auction stopping rules, therefore it adopts the proposals made in the *Auction No. 71 Comment Public Notice*. Auction No. 71 will begin under the simultaneous stopping rule approach, and the Bureau will retain the discretion to employ the other versions of the

stopping rule. Moreover, the Bureau will retain the discretion to use the modified stopping rule with or without prior announcement during the auction.

viii. Auction Delay, Suspension, or Cancellation

129. Because the Commission's approach to notification of delay during an auction has proven effective in resolving exigent circumstances in previous auctions, the Commission adopts its proposed rules regarding auction delay, suspension, or cancellation. By public notice or by announcement during the auction, the Bureau may delay, suspend, or cancel the auction in the event of natural disaster, technical obstacle, administrative or weather necessity, evidence of an auction security breach or unlawful bidding activity, or for any other reason that affects the fair and efficient conduct of competitive bidding. In such cases, the Bureau, in its sole discretion, may elect to resume the auction starting from the beginning of the current round, resume the auction starting from some previous round, or cancel the auction in its entirety. Network interruption may cause the Bureau to delay or suspend the auction. The Commission emphasizes that exercise of this authority is solely within the discretion of the Bureau, and its use is not intended to be a substitute for situations in which bidders may wish to apply their activity rule waivers.

*B. Bidding Procedures*

i. Round Structure

130. The initial schedule of bidding rounds will be announced in the public notice listing the qualified bidders, which is released approximately 10 days before the start of the auction. Each bidding round is followed by the release of round results. Multiple bidding rounds may be conducted in a given day. Details regarding round results formats and locations will also be included in the qualified bidders public notice.

131. The Bureau has discretion to change the bidding schedule in order to foster an auction pace that reasonably balances speed with the bidders' need to study round results and adjust their bidding strategies. The Bureau may increase or decrease the amount of time for the bidding rounds, the amount of time between rounds, or the number of rounds per day, depending upon bidding activity and other factors.

ii. Reserve Price or Minimum Opening Bids

132. Section 309(j) of the Communications Act of 1934, as amended, calls upon the Commission to prescribe methods by which a reasonable reserve price will be required or a minimum opening bid established when applications for FCC licenses are subject to auction (i.e., because they are mutually exclusive), unless the Commission determines that a reserve price or minimum opening bid is not in the public interest. Consistent with this mandate, the Commission directed the Bureau to seek comment on the use of a minimum opening bid and/or reserve price prior to the start of each auction. Among other factors, the Bureau must consider the amount of spectrum being auctioned, levels of incumbency, the availability of technology to provide service, the size of the geographic service areas, the extent of interference with other spectrum bands, and any other relevant factors that could have an impact on the spectrum being auctioned. The Commission concluded that the Bureau should have the discretion to employ either or both of these mechanisms for future auctions.

133. The Bureau proposed in the *Auction No. 71 Comment Public Notice* to establish minimum opening bids for each license, while retaining discretion to lower the minimum opening bids. Specifically, for Auction No. 71, the Bureau proposed the following formula for calculating license-by-license minimum opening bids based on bandwidth and license area population: $0.05 * MHz * License Area Population with a minimum of $500 per license.

134. The Bureau sought comment on this proposal and, in the alternative, whether, consistent with the Section 309(j), the public interest would be served by having no minimum opening bid.

135. In Commission auctions, minimum opening bids are intended to serve as useful starting points for bidding. Minimum opening bids are not intended to be estimates of final auction prices or to reflect all differences between license values. Accordingly, differences in license characteristics, such as population density, that may result in different final prices do not always necessitate different minimum opening bids for the licenses.

136. The Commission received no comments addressing the proposed minimum opening bid amounts or the formula proposed to calculate them. Accordingly, the Commission will adopt the proposal and set the minimum opening bids using the proposed formula of $0.05 * MHz * license area population with a minimum of $500 per license.

137. The Commission received no comments addressing the proposal that the Bureau retain the discretion to reduce minimum opening bid amounts. The Commission adopts this proposal. The minimum opening bid amounts adopted for Auction No. 71 are reducible at the discretion of the Bureau. The Commission emphasizes, however, that such discretion will be exercised, if at all, sparingly and early in the auction, i.e., before bidders lose all activity waivers. During the course of the auction, the Bureau will not entertain requests to reduce the minimum opening bid amount on specific licenses. The Commission notes that effectively the minimum opening bids operate as reserve prices.

138. The specific minimum opening bid amounts for each license available in Auction No. 71 calculated pursuant to the procedure described above are set forth in Attachment A of the *Auction No. 71 Procedures Public Notice*.

iii. Bid Amounts

139. In the *Auction No. 71 Comment Public Notice*, the Bureau proposed that in each round, eligible bidders be able to place a bid on a given license in any of nine different amounts. Under the proposal, the FCC Auction System interface will list the nine acceptable bid amounts for each license. The Commission received no comment on this issue. Based on the Commission's experience in prior auctions, the Commission adopts the proposals for Auction No. 71.

140. The first of the nine acceptable bid amounts is called the minimum acceptable bid amount. The minimum acceptable bid amount for a license will be equal to its minimum opening bid amount until there is a provisionally winning bid for the license. After there is a provisionally winning bid for a license, the minimum acceptable bid amount for that license will be equal to the amount of the provisionally winning bid plus a percentage of that bid amount calculated using the formula described below. In general, the percentage will be higher for a license receiving many bids than for a license receiving few bids. In the case of a license for which the provisionally winning bid has been withdrawn, the minimum acceptable bid amount will equal the second highest bid received for the license.

141. The percentage of the provisionally winning bid used to establish the minimum acceptable bid amount (the additional percentage) is calculated at the end of each round,

based on an activity index which is a weighted average of the number of bids in that round and the activity index from the prior round. Specifically, the activity index is equal to a weighting factor times the number of bids on the license in the most recent bidding round plus one minus the weighting factor times the activity index from the prior round. The additional percentage is determined as one plus the activity index times a minimum percentage amount, with the result not to exceed a given maximum. The additional percentage is then multiplied by the provisionally winning bid amount to obtain the minimum acceptable bid for the next round. The Commission will initially set the weighting factor at 0.5, the minimum percentage at 0.1 (10%), and the maximum percentage at 0.2 (20%). Hence, at these initial settings, the minimum acceptable bid for a license will be between 10% and 20% higher than the provisionally winning bid, depending upon the bidding activity for the license. Equations and examples are shown in Attachment E of the *Auction No. 71 Procedures Public Notice*.

142. The eight additional bid amounts are calculated using the minimum acceptable bid amount and a bid increment percentage. The first additional acceptable bid amount equals the minimum acceptable bid amount times one plus the bid increment percentage, rounded. If, for example, the bid increment percentage is ten percent, the calculation is (minimum acceptable bid amount) * (1 + 0.1), rounded, or (minimum acceptable bid amount) * 1.1, rounded; the second additional acceptable bid amount equals the minimum acceptable bid amount times one plus two times the bid increment percentage, rounded, or (minimum acceptable bid amount) * 1.2, rounded; the third additional acceptable bid amount equals the minimum acceptable bid amount times one plus three times the bid increment percentage, rounded, or (minimum acceptable bid amount) * 1.3, rounded; etc. The Commission will round the results of these calculations, as well as the calculations to determine the minimum acceptable bid amounts, using the Bureau's standard rounding procedures. For Auction No. 71, the Bureau proposed to use a bid increment percentage of ten percent to calculate the eight additional acceptable bid amounts. The Commission received no comment on this issue and will begin the auction with a bid increment percentage of ten percent.

143. The Commission received no comments on the Bureau's proposal to retain the discretion to change the minimum acceptable bid amounts, the parameters of the formula to determine the percentage of the provisionally winning bid used to determine the minimum acceptable bid, and the bid increment percentage if it determines that circumstances so dictate. The Bureau will do so by announcement in the FCC Auction System during the auction if circumstances warrant. The Commission adopts this proposal.

iv. Provisionally Winning Bids

144. At the end of each bidding round, a provisionally winning bid will be determined based on the highest bid amount received for each license. A provisionally winning bid will remain the provisionally winning bid until there is a higher bid on the same license at the close of a subsequent round. Provisionally winning bids at the end of the auction become the winning bids. Bidders are reminded that provisionally winning bids count toward activity for purposes of the activity rule.

145. In the *Auction No. 71 Comment Public Notice*, the Bureau proposed to use a random number generator to select a single provisionally winning bid in the event of identical high bid amounts being submitted on a license in a given round (i.e., tied bids). No comments were received on this proposal. Therefore, the Bureau adopts its proposal. A pseudo-random number generator based on the L'Ecuyer algorithms will be used to assign a random number to each bid. The tied bid with the highest random number wins the tiebreaker, and becomes the provisionally winning bid. The remaining eligible bidders, as well as the provisionally winning bidder, can submit higher bids in subsequent rounds. However, if the auction were to end with no other bids being placed, the winning bidder would be the one that placed the selected provisionally winning bid.

146. During a round, a bidder may submit bids for as many licenses as it wishes (providing that it is eligible to bid), withdraw provisionally winning bids from previous rounds, remove bids placed in the current bidding round, or permanently reduce eligibility. Bidders also have the option of submitting and removing multiple bids and withdrawing multiple provisionally winning bids (subject to the limitation on withdrawal rounds discussed below) during a round. If a bidder submits multiple bids for a single license in the same round, the system takes the last bid entered as that bidder's bid for the round. Bidders should note that the bidding units associated with licenses for which the bidder has removed or withdrawn its bid do not count towards the bidder's current activity.

147. All bidding will take place remotely either through the FCC Auction System or by telephonic bidding. There will be no on-site bidding during Auction No. 71. Note that telephonic bid assistants are required to use a script when entering bids placed by telephone. Telephonic bidders are therefore reminded to allow sufficient time to bid by placing their calls well in advance of the close of a round. The length of a call to place a telephonic bid may vary; please allow a minimum of 10 minutes.

148. A bidder's ability to bid on specific licenses is determined by two factors: (1) the licenses selected on the bidder's FCC Form 175 and (2) the bidder's eligibility. The bid submission screens will allow bidders to submit bids on only those licenses the bidder selected on its FCC Form 175.

149. In order to access the bidding function of the FCC Auction System, bidders must be logged in during the bidding round using the passcode generated by the SecurID® token and a personal identification number (PIN) created by the bidder. Bidders are strongly encouraged to print a round summary for each round after they have completed all of their activity for that round.

150. In each round, eligible bidders will be able to place bids on a given license in any of nine different amounts. For each license, the FCC Auction System will list the nine acceptable bid amounts in a drop-down box. Bidders use the drop-down box to select from among the acceptable bid amounts. The FCC Auction System also includes an upload function that allows bidders to upload text files containing bid information.

151. Until a bid has been placed on a license, the minimum acceptable bid amount for that license will be equal to its minimum opening bid amount. Once there are bids on a license, minimum acceptable bids for a license will be determined.

152. Finally, bidders are cautioned to select their bid amounts carefully because, as explained below, bidders that withdraw a provisionally winning bid from a previous round, even if the bid was mistakenly or erroneously made, are subject to bid withdrawal payments.

v. Bid Removal and Bid Withdrawal

153. In the *Auction No. 71 Comment Public Notice,* the Commission proposed bid removal and bid withdrawal procedures. With respect to bid withdrawals, the Commission

proposed limiting each bidder to withdrawals in no more than two rounds during the course of the auction. The round in which withdrawals are used would be at each bidder's discretion. The Commission received no comments on this issue. In previous auctions, the Commission detected bidder conduct that, arguably, may have constituted anti-competitive behavior through the use of bid withdrawals. While the Commission continues to recognize the important role that bid withdrawals may play in an auction, i.e., reducing risk associated with efforts to secure various licenses in combination, the Commission concludes that, for Auction No. 71, adoption of a limit on the use of withdrawals to two rounds per bidder is appropriate. By doing so the Commission believes it strikes a reasonable compromise that will allow bidders to use withdrawals. The Commission bases the decision on this issue upon its experience with bid withdrawals in prior auctions, including PCS D, E and F block, 800 MHz SMR, and other auctions. The Commission will therefore limit the number of rounds in which bidders may place withdrawals to two rounds, as previously proposed.

154. *Procedures.* Before the close of a bidding round, a bidder has the option of removing any bids placed in that round. By using the remove bids function in the FCC Auction System, a bidder may effectively unsubmit any bid placed within that round. A bidder removing a bid placed in the same round is not subject to withdrawal payments. Removing a bid will affect a bidder's activity for the round in which it is removed, i.e., a bid that is removed does not count toward bidding activity. These procedures will enhance bidder flexibility during the auction, and therefore the Commission adopts them for Auction No. 71.

155. Once a round closes, a bidder may no longer remove a bid. However, in later rounds, a bidder may withdraw provisionally winning bids from previous rounds using the withdraw bids function in the FCC Auction System (assuming that the bidder has not already withdrawn bids in two previous rounds). A provisionally winning bidder that withdraws its provisionally winning bid from a previous round during the auction is subject to the bid withdrawal payments specified in § 1.2104(g). Note: Once a withdrawal is submitted during a round, that withdrawal cannot be unsubmitted even if the round has not yet ended.

156. The rounds in which a bidder may withdraw its bids will be at the bidder's discretion and there will be no limit on the number of bids that may be withdrawn in either of these rounds. Withdrawals during the auction will be subject to the bid withdrawal payments specified in § 1.2104(g). Bidders should note that abuse of the Commission's bid withdrawal procedures could result in the denial of the ability to bid on a market.

157. If a provisionally winning bid is withdrawn, the minimum acceptable bid amount will equal the amount of the second highest bid received for the license, which may be less than, or in the case of tied bids, equal to, the amount of the withdrawn bid. To set the additional bid amounts, the second highest bid amount also will be used in place of the provisionally winning bid in the formula used to calculate additional bid amounts. The Commission will serve as a place holder provisionally winning bidder on the license until a new bid is submitted on that license.

158. *Calculation of Bid Withdrawal Payment.* Generally, the Commission imposes payments on bidders that withdraw high bids during the course of an auction. If a bidder withdraws its bid and there is no higher bid in the same or subsequent auction(s), the bidder that withdrew its bid is responsible for the difference between its withdrawn bid and the provisionally winning bid in the same or subsequent auction(s). In the case of multiple bid withdrawals on a single license, within the same or subsequent auctions(s), the payment for each bid withdrawal will be calculated based on the sequence of bid withdrawals and the amounts withdrawn. No withdrawal payment will be assessed for a withdrawn bid if either the subsequent winning bid or any subsequent intervening withdrawn bid, in either the same or subsequent auctions(s), equals or exceeds that withdrawn bid. Thus, a bidder that withdraws a bid will not be responsible for any withdrawal payments if there is a subsequent higher bid in the same or subsequent auction(s). This policy allows bidders most efficiently to allocate their resources as well as to evaluate their bidding strategies and business plans during an auction while, at the same time, maintaining the integrity of the auction process. The Bureau retains the discretion to scrutinize multiple bid withdrawals on a single license for evidence of anti-competitive strategic behavior and take appropriate action when deemed necessary.

159. Section 1.2104(g)(1) of the rules sets forth the payment obligations of a bidder that withdraws a high bid on a license during the course of an auction, and provides for the assessment of interim bid withdrawal payments. In the *Auction No. 71 Comment Public Notice,* the Bureau proposed to establish the percentage at fifteen percent for the broadband PCS auction and sought comment on the proposal.

160. The Commission received no comments on this issue and adopts the proposal. The Commission will assess an interim withdrawal payment equal to fifteen percent of the amount of the withdrawn bids. The fifteen percent interim payment will be applied toward any final bid withdrawal payment that will be assessed after subsequent auction of the license. Assessing an interim bid withdrawal payment ensures that the Commission receives a minimal withdrawal payment pending assessment of any final withdrawal payment. Section 1.2104(g) provides specific examples showing application of the bid withdrawal payment rule.

vi. Round Results

161. If limited information procedures described above are in effect, limited information about the results of a round will be made public after the conclusion of the round. Specifically, after a round closes, the Bureau will make available for each license, its current provisionally winning bid amount, the minimum acceptable bid amount for the following round, the amounts of all bids placed on the license during the round, and whether the license is FCC held. The reports will be publicly accessible. Moreover, after the auction, the Bureau will make available complete reports of all bids placed during each round of the auction, including bidder identities.

162. If, however, limited information procedures are not used, more information will be provided after each round in the auction. Bids placed during a round, including bidder identities, will be made public at the conclusion of that round. Specifically, after a round closes, the Bureau will compile reports of all bids placed and which bidders made them, current provisionally winning bids, new minimum acceptable bid amounts, and bidder eligibility status (bidding eligibility and activity rule waivers) and will post the reports for public access.

vii. Auction Announcements

163. The Commission will use auction announcements to announce items such as schedule changes and stage transitions. All auction announcements will be available by clicking a link in the FCC Auction System.

## V. Post-Auction Procedures

### *A. Down Payments*

164. After bidding has ended, the Commission will issue a public notice declaring the auction closed and identifying winning bidders, down payments and final payments due.

165. Within ten business days after release of the auction closing notice, each winning bidder must submit sufficient funds (in addition to its upfront payment) to bring its total amount of money on deposit with the Commission for Auction No. 71 to 20 percent of the net amount of its winning bids (gross bids less any applicable small business or very small business bidding credits).

### *B. Final Payments*

166. Each winning bidder will be required to submit the balance of the net amount of its winning bids within 10 business days after the deadline for submitting down payments.

### *C. Long-Form Application (FCC Form 601)*

167. Within ten business days after release of the auction closing notice, winning bidders must electronically submit a properly completed long-form application (FCC Form 601) for each license won through Auction No. 71. Winning bidders that are entrepreneurs and/or small businesses or very small businesses must demonstrate their qualifications to be considered an entrepreneur and/or their eligibility for a small business or very small business bidding credit. Further filing instructions will be provided to auction winners at the close of the auction.

168. The *CSEA/Part 1 Report and Order* modifies the procedure by which a consortium that is a winning bidder in Auction No. 71 will apply for a license. In particular, (a) each member or group of members of a winning consortium seeking separate licenses will be required to file a separate long-form application for its respective license(s) and, in the case of a license to be partitioned or disaggregated, the member or group filing the applicable long-form application shall provide the parties' partitioning or disaggregation agreement in its long-form application; (b) two or more consortium members seeking to be licensed together shall first form a legal business entity; and (c) any such entity must meet the applicable eligibility requirements in the Commission's rules for small business status. Applicants applying as consortia should review the *CSEA/Part 1 Report and Order* in detail and monitor any relevant future proceedings to understand how the members of the consortia will apply for a license in the event they are winning bidders.

### *D. Ownership Disclosure Information Report (FCC Form 602)*

169. At the time it submits its long-form application (FCC Form 601), each winning bidder also must comply with the ownership reporting requirements as set forth in §§ 1.913, 1.919, and 1.2112. Further instructions will be provided to winning bidders at the close of the auction.

### *E. Tribal Lands Bidding Credit*

170. A winning bidder that intends to use its license(s) to deploy facilities and provide services to federally recognized tribal lands that are unserved by any telecommunications carrier or that have a wireline penetration rate equal to or below 85 percent is eligible to receive a tribal lands bidding credit as set forth in §§ 1.2107 and 1.2110(f). A tribal lands bidding credit is in addition to, and separate from, any other bidding credit for which a winning bidder may qualify.

171. Unlike other bidding credits that are requested prior to the auction, a winning bidder applies for the tribal lands bidding credit after winning the auction when it files its long-form application (FCC Form 601). When initially filing the long-form application, the winning bidder will be required to advise the Commission whether it intends to seek a tribal lands bidding credit, for each license won in the auction, by checking the designated box(es). After stating its intent to seek a tribal lands bidding credit, the applicant will have 180 days from the close of the long-form filing window to amend its application to select the specific tribal lands to be served and provide the required tribal government certifications. Licensees receiving a tribal lands bidding credit are subject to performance criteria as set forth in § 1.2110(f)(3)(vi).

172. For additional information on the tribal lands bidding credit, including how the amount of the credit is calculated, applicants should review the Commission's rule making proceeding regarding tribal lands bidding credits and related public notices.

### *F. Default and Disqualification*

173. Any winning bidder that defaults or is disqualified after the close of the auction (i.e., fails to remit the required down payment within the prescribed period of time, fails to submit a timely long-form application, fails to make full payment, or is otherwise disqualified) will be subject to the payments described in § 1.2104(g)(2). The payments include both a deficiency payment, equal to the difference between the amount of the bidder's bid and the amount of the winning bid the next time a license covering the same spectrum is won in an auction, plus an additional payment equal to a percentage of the defaulter's bid or of the subsequent winning bid, whichever is less. Pursuant to recent modifications to the rule governing default payments, the percentage of the applicable bid to be assessed as an additional payment for defaults in a particular auction is established in advance of the auction. Accordingly, in the *Auction No. 71 Comment Public Notice*, the Bureau proposed to set the additional default payment for the auction of broadband PCS licenses at ten percent of the applicable bid. The Bureau sought comment on the proposal and no comments were received on this issue. The Commission therefore adopts the proposal and sets the additional default payment for the auction of broadband PCS licenses at ten percent of the applicable bid.

174. Finally, the Commission notes that in the event of a default, the Commission may re-auction the license or offer it to the next highest bidder (in descending order) at its final bid amount. In addition, if a default or disqualification involves gross misconduct, misrepresentation, or bad faith by an applicant, the Commission may declare the applicant and its principals ineligible to bid in future auctions, and may take any other action that it deems necessary, including institution of proceedings to revoke any existing licenses held by the applicant.

### *G. Refund of Remaining Upfront Payment Balance*

175. All applicants that submit upfront payments but after the close of the auction are not winning bidders for a license in Auction No. 71 may be entitled to a refund of their remaining upfront payment balance after the conclusion of the auction. All refunds will be returned to the payer of record, as identified on the FCC Form 159, unless the payer submits written authorization instructing otherwise.

176. Bidders that drop out of the auction completely may be eligible for a refund of their upfront payments before the close of the auction.

177. Following the close of the auction, the Commission may refund upfront monies on deposit that exceed the required total of payments owed by winning bidders. Such refunds will be made to the payer of record as identified on the FCC Form 159, provided the

necessary refund request and wire transfer instructions have been received.

Federal Communications Commission.

**Gary D. Michaels,**

*Deputy Chief, Auctions and Spectrum Access Division, WTB.*

[FR Doc. E7–3786 Filed 3–2–07; 8:45 am]

**BILLING CODE 6712–01–P**

## FEDERAL ELECTION COMMISSION

### Sunshine Act Meeting Notices

**DATE & TIME:** Thursday, March 8, 2007, at 10 a.m.

**PLACE:** 999 E Street, NW., Washington, DC (Ninth Floor)

**STATUS:** This Meeting Will be Open to the Public.

**THE FOLLOWING ITEMS HAVE BEEN ADDED TO THE AGENDA:** Report of the Audit Division on Kucinich for President, Inc.; Report of the Audit Division on LaRouch in 2004.

**PERSON TO CONTACT FOR INFORMATION:** Mr. Robert Biersack, Press Officer, *Telephone:* (202) 694–1220.

**Mary W. Dove,**

*Secretary of the Commission.*

[FR Doc. 07–1014 Filed 3–1–07; 2:50 pm]

**BILLING CODE 6715–01–M**

## FEDERAL RESERVE SYSTEM

### Formations of, Acquisitions by, and Mergers of Bank Holding Companies

The companies listed in this notice have applied to the Board for approval, pursuant to the Bank Holding Company Act of 1956 (12 U.S.C. 1841 *et seq.*) (BHC Act), Regulation Y (12 CFR Part 225), and all other applicable statutes and regulations to become a bank holding company and/or to acquire the assets or the ownership of, control of, or the power to vote shares of a bank or bank holding company and all of the banks and nonbanking companies owned by the bank holding company, including the companies listed below.

The applications listed below, as well as other related filings required by the Board, are available for immediate inspection at the Federal Reserve Bank indicated. The application also will be available for inspection at the offices of the Board of Governors. Interested persons may express their views in writing on the standards enumerated in the BHC Act (12 U.S.C. 1842(c)). If the proposal also involves the acquisition of a nonbanking company, the review also includes whether the acquisition of the nonbanking company complies with the standards in section 4 of the BHC Act (12 U.S.C. 1843). Unless otherwise noted, nonbanking activities will be conducted throughout the United States. Additional information on all bank holding companies may be obtained from the National Information Center website at *http://www.ffiec.gov/nic/.*

Unless otherwise noted, comments regarding each of these applications must be received at the Reserve Bank indicated or the offices of the Board of Governors not later than March 30, 2007.

**A. Federal Reserve Bank of Atlanta** (David Tatum, Vice President) 1000 Peachtree Street, N.E., Atlanta, Georgia 30309:

*1. Community Holding Company of Florida, Inc.*, Miramar Beach, Florida; to become a bank holding company by acquiring 100 percent of the voting shares of Community Bank, Destin, Miramar Beach, Florida (in organization).

*2. CNBS Financial Group, Inc.*, to become a bank holding company by acquiring 100 percent of the voting shares of Community National Bank of the South (in organization), both of Lake Mary, Florida.

Board of Governors of the Federal Reserve System, February 28, 2007.

**Robert deV. Frierson,**

*Deputy Secretary of the Board.*

[FR Doc. E7–3760 Filed 3–2–07; 8:45 am]

**BILLING CODE 6210–01–S**

## DEPARTMENT OF HEALTH AND HUMAN SERVICES

### Office of the National Coordinator for Health Information Technology

### American Health Information Community Confidentiality, Privacy, and Security Workgroup Meeting

**ACTION:** Announcement of meeting.

**SUMMARY:** This notice announces the eighth meeting of the American Health Information Community Confidentiality, Privacy, and Security Workgroup in accordance with the Federal Advisory Committee Act (Pub. L. 92–463, 5 U.S.C., App.)

**DATES:** March 15, 2007, from 10:30 a.m. to 4:30 p.m. Eastern Time.

**ADDRESSES:** Hubert H. Humphrey building (200 Independence Avenue, SW., Washington, DC 20201), Conference Room 705A (please bring photo ID for entry to a Federal building).

**FOR FURTHER INFORMATION CONTACT:** *http://www.hhs.gov/healthit/ahic/confidentiality/.*

**SUPPLEMENTARY INFORMATION:** The Workgroup Members will discuss identity proofing issues and priorities.

The meeting will be available via Web cast at *http://www.hhs.gov/healthit/ahic/cps_instruct.html.*

Dated: February 23, 2007.

**Judith Sparrow,**

*Director, American Health Information Community, Office of Programs and Coordination, Office of the National Coordinator for Health Information Technology.*

[FR Doc. 07–985 Filed 3–2–07; 8:45 am]

**BILLING CODE 4150–24–M**

## DEPARTMENT OF HEALTH AND HUMAN SERVICES

### Agency for Healthcare Research and Quality

### Notice of Meeting

In accordance with section 10(d) of the Federal Advisory Committee Act (5 U.S.C., Appendix 2), announcement is made of a Health Care Policy and Research Special Emphasis Panel (SEP) meeting.

A Special Emphasis Panel is a group of experts in fields related to health care research who are invited by the Agency for Healthcare Research and Quality (AHRQ), and agree to be available, to conduct on an as needed basis, scientific reviews of applications for AHRQ support. Individual members of the Panel do not attend regularly-scheduled meetings and do not serve for fixed terms or a long period of time. Rather, they are asked to participate in particular review meetings which require their type of expertise.

Substantial segments of the upcoming SEP meeting listed below will be closed to the public in accordance with the Federal Advisory Committee Act, section 10(d) of 5 U.S.C., Appendix 2 and 5 U.S.C. 552b(c)(6). Grant applications for ''The Centers for Education and Research on Therapeutics (CERTs),'' are to be reviewed and discussed at this meeting. These discussions are likely to reveal personal information concerning individuals associated with the applications. This information is exempt from mandatory disclosure under the above-cited statutes.

*SEP Meeting on:* The Centers for Education and Research on Therapeutics (CERTs).

*Date:* April 16, 2007 (Open on April 16 from 8 a.m. to 8:15 a.m. and closed for the remainder of the meeting).

*Place:* John M. Eisenberg Building, AHRQ Conference Center, 540 Gaither Road, Rockville, Maryland 20850.

*Contact Person:* Anyone wishing to obtain a roster of members, agenda or minutes of the non-confidential portions of this meeting should contact Mrs. Bonnie Campbell, Committee Management Officer, Office of Extramural Research, Education and Priority Populations, AHRQ, 540 Gaither Road, Room 2038, Rockville, Maryland 20850, Telephone (301) 427–1554.

Agenda items for this meeting are subject to change as priorities dictate.

Dated: February 20, 2007.

**Carolyn M. Clancy,**

*Director.*

[FR Doc. 07–978 Filed 3–2–07; 8:45 am]

**BILLING CODE 4160–90–M**

## DEPARTMENT OF HEALTH AND HUMAN SERVICES

### Agency for Healthcare Research and Quality

### Notice of Meeting

In accordance with section 10(d) of the Federal Advisory Committee Act (5 U.S.C., Appendix 2), announcement is made of a Health Care Policy and Research Special Emphasis Panel (SEP) meeting.

A Special Emphasis Panel is a group of experts in fields related to health care research who are invited by the Agency for Healthcare Research and Quality (AHRQ), and agree to be available, to conduct on an as needed basis, scientific reviews of applications for AHRQ support. Individual members of the Panel do not attend regularly-scheduled meetings and do not serve for fixed terms or a long period of time. Rather, they are asked to participate in particular review meetings which require their type of expertise.

Substantial segments of the upcoming SEP meeting listed below will be closed to the public in accordance with the Federal Advisory Committee Act, section 10(d) of 5 U.S.C., Appendix 2 and 5 U.S.C. 552b(c)(6). Grant applications for ''Consumer Assessment of Healthcare Providers and Systems (CAHPS)'' are to be reviewed and discussed at this meeting. These discussions are likely to reveal personal information concerning individuals associated with the applications. This information is exempt from mandatory disclosure under the above-cited statutes.

*SEP Meeting on:* Consumer Assessment of Healthcare Providers and Systems (CAHPS).

*Date:* March 20, 2007 (Open on March 20 from 9 a.m. to 8:15 a.m. and closed for the remainder of the meeting).

*Place:* John M. Eisenberg Building, AHRQ Conference Center, 540 Gaither Road, Rockville, Maryland 20850.

*Contact Person:* Anyone wishing to obtain a roster of members, agenda or minutes of the non-confidential portions of this meeting should contact Mrs. Bonnie Campbell, Committee Management Officer, Office of Extramural Research, Education and Priority Populations, AHRQ, 540 Gaither Road, Room 2038, Rockville, Maryland 20850, Telephone (301) 427–1554.

Agenda items for this meeting are subject to change as priorities dictate.

Dated: February 20, 2007.

**Carolyn M. Clancy,**

*Director.*

[FR Doc. 07–979 Filed 3–2–07; 8:45 am]

**BILLING CODE 4160–90–M**

## DEPARTMENT OF HEALTH AND HUMAN SERVICES

### Food and Drug Administration

**[Docket No. 2005P–0237]**

### Determination That LAMICTAL (Lamotrigine) Tablets, 50 Milligrams and 250 Milligrams, Were Not Withdrawn From Sale for Reasons of Safety or Effectiveness

**AGENCY:** Food and Drug Administration, HHS.

**ACTION:** Notice.

**SUMMARY:** The Food and Drug Administration (FDA) has determined that LAMICTAL (lamotrigine) tablets, 50 milligrams (mg) and 250 mg, were not withdrawn from sale for reasons of safety or effectiveness. This determination will allow FDA to approve abbreviated new drug applications (ANDAs) for lamotrigine tablets, 50 mg and 250 mg, if all other legal and regulatory requirements are met.

**FOR FURTHER INFORMATION CONTACT:** Martha Nguyen, Center for Drug Evaluation and Research (HFD–7), Food and Drug Administration, 5600 Fishers Lane, Rockville, MD 20857, 301–594–2041.

**SUPPLEMENTARY INFORMATION:** In 1984, Congress enacted the Drug Price Competition and Patent Term Restoration Act of 1984 (Public Law 98–417) (the 1984 amendments), which authorized the approval of duplicate versions of drug products approved under an ANDA procedure. ANDA sponsors must, with certain exceptions, show that the drug for which they are seeking approval contains the same active ingredient in the same strength and dosage form as the ''listed drug,'' which is typically a version of the drug that was previously approved. Sponsors of ANDAs do not have to repeat the extensive clinical testing otherwise necessary to gain approval of a new drug application (NDA). The only clinical data required in an ANDA are data to show that the drug that is the subject of the ANDA is bioequivalent to the listed drug.

The 1984 amendments include what is now section 505(j)(7) of the Federal Food, Drug, and Cosmetic Act (21 U.S.C. 355(j)(7)), which requires FDA to publish a list of all approved drugs. FDA publishes this list as part of the ''Approved Drug Products With Therapeutic Equivalence Evaluations,'' which is generally known as the ''Orange Book.'' Under FDA regulations, drugs are withdrawn from the list if the agency withdraws or suspends approval of the drug's NDA or ANDA for reasons of safety or effectiveness or if FDA determines that the listed drug was withdrawn from sale for reasons of safety or effectiveness (§ 314.162 (21 CFR 314.162)).

Under § 314.161(a)(1) (21 CFR 314.161(a)(1)), the agency must determine whether a listed drug was withdrawn from sale for reasons of safety or effectiveness before an ANDA that refers to that listed drug may be approved. FDA may not approve an ANDA that does not refer to a listed drug.

LAMICTAL (lamotrigine) tablets, 50 mg and 250 mg, are the subject of approved NDA 20–241 held by GlaxoSmithKline (GSK). LAMICTAL (lamotrigine) is an antiepileptic drug indicated as adjunctive therapy for partial seizures in adults and pediatric patients. It is also approved for conversion to monotherapy in adults with partial seizures who are receiving treatment with a single enzyme-inducing antiepileptic drug or valproate. In addition, LAMICTAL (lamotrigine) is indicated for the maintenance treatment of Bipolar I Disorder in certain patients.

FDA approved the NDA for LAMICTAL (lamotrigine) tablets, including the 50 mg and 250 mg strengths, on December 27, 1994. GSK has never marketed the 50 mg and 250 mg strengths of LAMICTAL (lamotrigine) tablets.

In a citizen petition dated June 9, 2005 (Docket No. 2005P–0237/CP1), submitted under 21 CFR 10.30, J. Mark Pohl of Pharmaceutical Patent Attorneys, LLC, requested that the agency determine whether LAMICTAL (lamotrigine) tablets, 50 mg and 250 mg, were withdrawn from sale for reasons of safety or effectiveness. After considering the citizen petition and reviewing agency records, FDA has determined

that LAMICTAL (lamotrigine) tablets, 50 mg and 250 mg, were not withdrawn from sale for reasons of safety or effectiveness. To date, GSK has not marketed LAMICTAL (lamotrigine) tablets, 50 mg and 250 mg. In previous instances (see, e.g., 67 FR 79640, December 30, 2002 (addressing a relisting request for Diazepam Autoinjector)), the agency has determined that, for purposes of §§ 314.161 and 314.162, never marketing an approved drug product is equivalent to withdrawing the drug from sale.

The petitioner identified no data or other information suggesting that LAMICTAL (lamotrigine) tablets, 50 mg and 250 mg, were withdrawn from sale as a result of safety or effectiveness concerns. GSK has marketed other strengths of LAMICTAL (lamotrigine) tablets: 25 mg, 100 mg, 150 mg, and 200 mg. FDA has reviewed its files for records concerning the withdrawal of LAMICTAL (Lamotrigine) tablets, 50 mg and 250 mg. There is no indication that GSK's decision not to market LAMICTAL (lamotrigine) tablets, 50 mg and 250 mg, commercially is a function of safety or effectiveness concerns, and no information has been submitted to the docket concerning the reason for which LAMICTAL (lamotrigine) tablets, 50 mg and 250 mg, were withdrawn from sale. FDA's independent evaluation of relevant information has uncovered nothing that would indicate that LAMICTAL (lamotrigine) tablets, 50 mg and 250 mg, were withdrawn from sale for reasons of safety or effectiveness.

For the reasons outlined in this document, FDA has determined that LAMICTAL (lamotrigine) tablets, 50 mg and 250 mg, were not withdrawn from sale for reasons of safety or effectiveness. Accordingly, the agency will continue to list LAMICTAL (lamotrigine) tablets, 50 mg and 250 mg, in the ''Discontinued Drug Product List'' section of the Orange Book. The ''Discontinued Drug Product List'' delineates, among other items, drug products that have been discontinued from marketing for reasons other than safety and effectiveness. ANDAs that refer to LAMICTAL (lamotrigine) tablets, 50 mg and 250 mg, may be approved by the agency, as long as they meet all relevant legal and regulatory requirements for approval of ANDAs.

Dated: February 26, 2007.

**Jeffrey Shuren,**

*Assistant Commissioner for Policy.*

[FR Doc. E7–3713 Filed 3–2–07; 8:45 am]

BILLING CODE 4160–01–S

## DEPARTMENT OF HEALTH AND HUMAN SERVICES

### Food and Drug Administration

### Joint Meeting of the Anti-Infective Drugs Advisory Committee and the Pediatric Advisory Committee; Notice of Meeting

**AGENCY:** Food and Drug Administration, HHS.

**ACTION:** Notice.

This notice announces a forthcoming meeting of a public advisory committee of the Food and Drug Administration (FDA). The meeting will be open to the public.

*Name of Committees*: Anti-Infective Drugs Advisory Committee and the Pediatric Advisory Committee.

*General Function of the Committees*: To provide advice and recommendations to the agency on FDA's regulatory issues.

*Date and Time*: The meeting will be held on April 12, 2007, from 8:30 a.m. to 5 p.m.

*Location*: Food and Drug Administration, Center for Drug Evaluation and Research Advisory Committee Conference Room, rm. 1066, 5630 Fishers Lane, Rockville, MD.

*Contact Person*: Sohail Mosaddegh, Center for Drug Evaluation and Research (HFD–21), Food and Drug Administration, 5600 Fishers Lane (for express delivery, 5630 Fishers Lane, rm. 1093), Rockville, MD 20857, 301–827–7001, FAX: 301–827–6776, e-mail: *sohail.mosaddegh@fda.hhs.gov*, or FDA Advisory Committee Information Line, 1–800–741–8138 (301–443–0572 in the Washington DC area), codes 3014512530 or 8732310001. Please call the Information Line for up-to-date information on this meeting.

*Agenda*: The committee will discuss clinical trial designs for products that seek indications for the prevention and/or treatment of disease caused by Shiga toxin-producing bacteria. FDA intends to make background material available to the public no later than 1 business day before the meeting. If FDA is unable to post the background material on its Web site prior to the meeting, the background material will be made publicly available at the location of the advisory committee meeting, and the background material will be posted on FDA's Web site after the meeting. Background material is available at *http://www.fda.gov/ohrms/dockets/ac/acmenu.htm*, click on the year 2007 and scroll down to the appropriate advisory committee link.

*Procedure*: Interested persons may present data, information, or views, orally or in writing, on issues pending before the committee. Written submissions may be made to the contact person on or before March 29, 2007. Oral presentations from the public will be scheduled between approximately 1 p.m. and 2 p.m. Those desiring to make formal oral presentations should notify the contact person and submit a brief statement of the general nature of the evidence or arguments they wish to present, the names and addresses of proposed participants, and an indication of the approximate time requested to make their presentation on or before March 21, 2007. Time allotted for each presentation may be limited. If the number of registrants requesting to speak is greater than can be reasonably accommodated during the scheduled open public hearing session, FDA may conduct a lottery to determine the speakers for the scheduled open public hearing session. The contact person will notify interested persons regarding their request to speak by March 22, 2007.

Persons attending FDA's advisory committee meetings are advised that the agency is not responsible for providing access to electrical outlets.

FDA welcomes the attendance of the public at its advisory committee meetings and will make every effort to accommodate persons with physical disabilities or special needs. If you require special accommodations due to a disability, please contact Sohail Mosaddegh at least 7 days in advance of the meeting.

Notice of this meeting is given under the Federal Advisory Committee Act (5 U.S.C. app. 2).

Dated: February 26, 2007.

**Randall W. Lutter,**

*Associate Commissioner for Policy and Planning.*

[FR Doc. E7–3720 Filed 3–2–07; 8:45 am]

BILLING CODE 4160–01–S

## DEPARTMENT OF HEALTH AND HUMAN SERVICES

### Food and Drug Administration

**[Docket No. 2007N–0055]**

### Arthritis Advisory Committee; Notice of Meeting

**AGENCY:** Food and Drug Administration, HHS.

**ACTION:** Notice.

This notice announces a forthcoming meeting of a public advisory committee of the Food and Drug Administration (FDA). The meeting will be open to the public.

*Name of Committee*: Arthritis Advisory Committee.

*General Function of the Committee*: To provide advice and recommendations to the agency on FDA's regulatory issues.

*Date and Time*: The meeting will be held on April 12, 2007, from 8:30 a.m. to 5 p.m.

*Addresses*: Electronic comments should be submitted to *http://www.fda.gov/dockets/ecomments.* Select ''2007N–0055—Arcoxia—Arthritis Advisory Committee Meeting, April 12, 2007'' and follow the prompts to submit your statement. Written comments should be submitted to the Division of Dockets Management (HFA–305), Food and Drug Administration, 5630 Fishers Lane, rm. 1061, Rockville, MD 20852, by close of business on March 29, 2007. All comments will be posted without change, including any personal information provided. Comments received on or before March 29, 2007, will be provided to the committee before the meeting.

*Location*: Hilton Washington DC North/Gaithersburg, The Ballrooms, 620 Perry Pkwy., Gaithersburg, MD.

*Contact Person*: Johanna Clifford, Center for Drug Evaluation and Research (HFD–21), Food and Drug Administration, 5600 Fishers Lane (for express delivery, 5630 Fishers Lane, rm. 1093), Rockville, MD 20857, 301–827–7001, FAX: 301–827–6776, e-mail: *Johanna.Clifford@fda.hhs.gov*, or FDA Advisory Committee Information Line, 1–800–741–8138 (301–443–0572 in the Washington, DC area), code 3014512532. Please call the Information Line for up-to-date information on this meeting.

*Agenda*: The committee will discuss new drug application (NDA) 21–389/21–772, ARCOXIA (etoricoxib), Merck & Co., Inc., proposed treatment for the relief of signs and symptoms of osteoarthritis.

FDA intends to make background material available to the public no later than 1 business day before the meeting. If FDA is unable to post the background material on its Web site prior to the meeting, the background material will be made publicly available at the location of the advisory committee meeting, and the background material will be posted on FDA's Web site after the meeting. Background material is available at *http://www.fda.gov/ohrms/dockets/ac/acmenu.htm*, click on the year 2007 and scroll down to the appropriate advisory committee link.

*Procedure*: Interested persons may present data, information, or views, orally or in writing, on issues pending before the committee. Written submissions may be made to the contact person on or before March 29, 2007. Oral presentations from the public will be scheduled between approximately 11:30 a.m. and 12:30 p.m. Those desiring to make formal oral presentations should notify the contact person and submit a brief statement of the general nature of the evidence or arguments they wish to present, the names and addresses of proposed participants, and an indication of the approximate time requested to make their presentation on or before March 21, 2007. Time allotted for each presentation may be limited. If the number of registrants requesting to speak is greater than can be reasonably accommodated during the scheduled open public hearing session, FDA may conduct a lottery to determine the speakers for the scheduled open public hearing session. The contact person will notify interested persons regarding their request to speak by March 22, 2007.

Persons attending FDA's advisory committee meetings are advised that the agency is not responsible for providing access to electrical outlets.

FDA welcomes the attendance of the public at its advisory committee meetings and will make every effort to accommodate persons with physical disabilities or special needs. If you require special accommodations due to a disability, please contact Johanna Clifford at least 7 days in advance of the meeting.

Notice of this meeting is given under the Federal Advisory Committee Act (5 U.S.C. app. 2).

Dated: February 26, 2007.

**Randall W. Lutter,**

*Associate Commissioner for Policy and Planning.*

[FR Doc. E7–3722 Filed 3–2–07; 8:45 am]

**BILLING CODE 4160–01–S**

---

## DEPARTMENT OF HEALTH AND HUMAN SERVICES

### Food and Drug Administration

### Cardiovascular and Renal Drugs Advisory Committee; Notice of Meeting

**AGENCY:** Food and Drug Administration, HHS.

**ACTION:** Notice.

This notice announces a forthcoming meeting of a public advisory committee of the Food and Drug Administration (FDA). The meeting will be open to the public.

*Name of Committee*: Cardiovascular and Renal Drugs Advisory Committee

*General Function of the Committee*: To provide advice and recommendations to the agency on FDA's regulatory issues.

*Date and Time*: The meeting will be held on April 18, 2007, from 8 a.m. to 5 p.m.

*Location*: Food and Drug Administration, Center for Drug Evaluation and Research Advisory Committee Conference Room, rm. 1066, 5630 Fishers Lane, Rockville, MD.

*Contact Person*: Cathy A. Groupe, Center for Drug Evaluation and Research (HFD–21), Food and Drug Administration, 5600 Fishers Lane (for express delivery, 5630 Fishers Lane, rm. 1093), Rockville, MD 20857, 301–827–7001, FAX: 301–827–6776, e-mail: *Cathy.Groupe@fda.hhs.gov*, or FDA Advisory Committee Information Line, 1–800–741–8138 (301–443–0572 in the Washington, DC area), code 3014512533. Please call the information line for up-to-date information on this meeting.

*Agenda*: The committee will discuss supplemental new drug application (sNDA) 20–758/S–037, AVALIDE (irbesartan plus hydrochlorothiazide), Bristol-Myers Squibb Co. The sponsor is seeking approval for first-line use in hypertensive patients unlikely to achieve blood pressure goals on one drug. The committee will be asked to consider what constitutes adequate data to support such a claim and how the information can be most usefully displayed in labeling.

FDA intends to make background material available to the public no later than 1 business day before the meeting. If FDA is unable to post the background material on its Web site prior to the meeting, the background material will be made publicly available at the location of the advisory committee meeting, and the background material will be posted on FDA's Web site after the meeting. Background material is available at *http://www.fda.gov/ohrms/dockets/ac/acmenu.htm*, click on the year 2007 and scroll down to the appropriate advisory committee link.

*Procedure*: Interested persons may present data, information, or views, orally or in writing, on issues pending before the committee. Written submissions may be made to the contact person on or before April 3, 2007. Oral presentations from the public will be scheduled between approximately 8:30 a.m. to 9:30 a.m. Those desiring to make formal oral presentations should notify the contact person and submit a brief statement of the general nature of the evidence or arguments they wish to present, the names and addresses of

proposed participants and an indication of the approximate time requested to make their presentation on or before March 26, 2007. Time allotted for each presentation may be limited. If the number of registrants requesting to speak is greater than can be reasonably accommodated during the scheduled open public hearing session, FDA may conduct a lottery to determine the speakers for the scheduled open public hearing session. The contact person will notify interested persons regarding their request to speak by March 27, 2007.

Persons attending FDA's advisory committee meetings are advised that the agency is not responsible for providing access to electrical outlets.

FDA welcomes the attendance of the public at its advisory committee meetings and will make every effort to accommodate persons with physical disabilities or special needs. If you require special accommodations due to a disability, please contact Cathy Groupe at least 7 days in advance of the meeting.

Notice of this meeting is given under the Federal Advisory Committee Act (5 U.S.C. app. 2).

Dated: February 26, 2007.

**Randall W. Lutter,**

*Associate Commissioner for Policy and Planning.*

[FR Doc. E7–3721 Filed 3–2–07; 8:45 am]

**BILLING CODE 4160–01–S**

## DEPARTMENT OF HEALTH AND HUMAN SERVICES

### Food and Drug Administration

**[Docket No. 2007N–0061]**

### Cellular, Tissue, and Gene Therapies Advisory Committee; Notice of Meeting

**AGENCY:** Food and Drug Administration, HHS.

**ACTION:** Notice.

This notice announces a forthcoming meeting of a public advisory committee of the Food and Drug Administration (FDA). At least one portion of the meeting will be closed to the public.

*Name of Committee*: Cellular, Tissue, and Gene Therapies Advisory Committee.

*General Function of the Committee*: To provide advice and recommendations to the agency on FDA's regulatory issues.

*Date and Time*: The meeting will be held on March 29, 2007, from 8 a.m. to approximately 6:30 p.m. and on March 30, 2007 from 8 a.m. to approximately 3 p.m.

*Address*: Electronic comments should be submitted to *http://www.fda.gov/dockets/ecomments*. Select Docket No. 2007N–0061, ''Sipuleucel-T Dendreon,'' and follow prompts to submit your statement. Written comments should be submitted to the Division of Dockets Management (HFA–305), Food and Drug Administration, 5630 Fishers Lane, rm. 1061, Rockville, MD 20852, by close of business on March 22, 2007. All comments received will be posted without change, including any personal information provided. Comments received on or before March 22, 2007, will be provided to the committee before or at the meeting.

*Location*: Hilton Washington DC North/Gaithersburg, 620 Perry Pkwy., Gaithersburg, MD, Grand Ballroom.

*Contact Person*: Gail Dapolito or Rosanna L. Harvey, Center for Biologics Evaluation and Research (HFM–71), Food and Drug Administration, 1401 Rockville Pike, Rockville, MD 20852, 301–827–1289, FAX: 301–827–0294, or FDA Advisory Committee Information Line, 1–800–741–8138 (301–443–0572 in the Washington, DC area), code 3014512389. Please call the Information Line for up-to-date information on this meeting.

*Agenda*: On March 29, 2007, in open session, the committee will discuss Sipuleucel-T, Dendreon (BLA–STN 125197) indicated for the treatment of men with asymptomatic metastatic hormone refractory prostate cancer. The committee will also hear overviews of research programs in the Division of Cellular and Gene Therapies, Center for Biologics Evaluation and Research. On March 30, 2007, in open session, the committee will discuss the draft document entitled ''Guidance for Industry: Minimally Manipulated, Unrelated, Allogeneic Placental/Umbilical Cord Blood Intended for Hematopoietic Reconstitution in Patients with Hematological Malignancies.'' For a copy of the draft guidance visit *http://www.fda.gov/cber/gdlns/cordbld.pdf*. The committee will also discuss scientific issues regarding minimally manipulated, unrelated allogeneic peripheral blood stem cells.

FDA intends to make background material available to the public no later than 1 business day before the meeting. If FDA is unable to post the background material on its Web site prior to the meeting, the background material will be made publicly available at the location of the advisory committee meeting, and the background material will be posted on FDA's Web site after the meeting. Background material is available at *http://www.fda.gov/ohrms/dockets/ac/acmenu.htm*, click on the year 2007 and scroll down to the appropriate advisory committee link.

*Procedure*: On March 29, 2007, from 8 a.m. to approximately 5:30 p.m., and on March 30, 2007, from 8 a.m. to approximately 3 p.m., the meeting is open to the public. Interested persons may present data, information, or views, orally or in writing, on issues pending before the committee. Written submissions may be made to the contact person on or before March 15, 2007. Oral presentations from the public will be scheduled between approximately 11:30 a.m. and 12:30 p.m. on March 29, 2007, and between 10 a.m. and 11 a.m. on March 30, 2007. Those desiring to make formal oral presentations should notify the contact person and submit a brief statement of the general nature of the evidence or arguments they wish to present, the names and addresses of proposed participants, and an indication of the approximate time requested to make their presentation on or before March 7, 2007. Time allotted for each presentation may be limited. If the number of registrants requesting to speak is greater than can be reasonably accommodated during the scheduled open public hearing session, FDA may conduct a lottery to determine the speakers for the scheduled open public hearing session. The contact person will notify interested persons regarding their request to speak by March 8, 2007.

*Closed Committee Deliberations*: On March 29, 2007, at approximately 5:30 p.m., the meeting will be closed to permit discussion where disclosure would constitute a clearly unwarranted invasion of personal privacy (5 U.S.C. 552b(c)(6)). The committee will discuss a report of intramural research programs in the Division of Cellular and Gene Therapies.

Persons attending FDA's advisory committee meetings are advised that the agency is not responsible for providing access to electrical outlets.

FDA welcomes the attendance of the public at its advisory committee meetings and will make every effort to accommodate persons with physical disabilities or special needs. If you require special accommodations due to a disability, please contact Gail Dapolito at least 7 days in advance of the meeting.

Notice of this meeting is given under the Federal Advisory Committee Act (5 U.S.C. app. 2).

Dated: February 26, 2007.

**Randall W. Lutter,**

*Associate Commissioner for Policy and Planning.*

[FR Doc. E7–3712 Filed 3–2–07; 8:45 am]

**BILLING CODE 4160–01–S**

## DEPARTMENT OF HEALTH AND HUMAN SERVICES

### Food and Drug Administration

### Manufacturing Subcommittee of the Advisory Committee for Pharmaceutical Science and Clinical Pharmacology (Formerly Advisory Committee for Pharmaceutical Science); Notice of Meeting

**AGENCY:** Food and Drug Administration, HHS.

**ACTION:** Notice.

This notice announces a forthcoming meeting of a public advisory committee of the Food and Drug Administration (FDA). The meeting will be open to the public.

*Name of Committee*: Manufacturing Subcommittee of the Advisory Committee for Pharmaceutical Science and Clinical Pharmacology (formerly Advisory Committee for Pharmaceutical Science).

*General Function of the Subcommittee*: To provide advice and recommendations to the agency on FDA's regulatory issues.

*Date and Time*: The meeting will be held on April 30, 2007, from 8:30 a.m. to 5 p.m.

*Location*: Food and Drug Administration, Center for Drug Evaluation and Research Advisory Committee Conference Room, rm. 1066, 5630 Fishers Lane, Rockville, MD.

*Contact Person*: Victoria Ferretti-Aceto, Center for Drug Evaluation and Research (HFD–21), Food and Drug Administration, 5600 Fishers Lane (for express delivery, 5630 Fishers Lane, rm. 1093) Rockville, MD 20857, 301–827–7001, FAX: 301–827–6776, e-mail: *Victoria.FerrettiAceto@fda.hhs.gov*, or FDA Advisory Committee Information Line, 1–800–741–8138 (301–443–0572) in the Washington, DC area), code 3014512539. Please call the Information Line for up-to-date information on this meeting.

*Agenda*: The subcommittee will do the following: (1) As an awareness topic, discuss issues pertaining to the stability of tablets split for patient use; (2) receive a general update and discuss current strategies on quality by design and the Office of Generic Drugs' question-based review; and (3) receive an update on and discuss the status of the Office of New Drug Quality Assessment Chemistry, Manufacturing, and Controls Pilot Program.

FDA intends to make background material available to the public no later than 1 business day before the meeting. If FDA is unable to post the background material on its Web site prior to the meeting, the background material will be made publicly available at the location of the advisory committee meeting, and the background material will be posted on FDA's Web site after the meeting. Background material is available at *http://www.fda.gov/ohrms/dockets/ac/acmenu.htm*, click on the year 2007 and scroll down to the appropriate advisory committee link.

*Procedure*: Interested persons may present data, information, or views, orally or in writing, on issues pending before the subcommittee. Written submissions may be made to the contact person on or before April 16, 2007. Oral presentations from the public will be scheduled between approximately 1 p.m. and 2 p.m. Those desiring to make formal oral presentations should notify the contact person and submit a brief statement of the general nature of the evidence or arguments they wish to present, the names and addresses of proposed participants, and an indication of the approximate time requested to make their presentation on or before April 6, 2007. Time allotted for each presentation may be limited. If the number of registrants requesting to speak is greater than can be reasonably accommodated during the scheduled open public hearing session, FDA may conduct a lottery to determine the speakers for the scheduled open public hearing session. The contact person will notify interested persons regarding their request to speak by April 9, 2007.

Persons attending FDA's advisory committee meetings are advised that the agency is not responsible for providing access to electrical outlets.

FDA welcomes the attendance of the public at its advisory committee meetings and will make every effort to accommodate persons with physical disabilities or special needs. If you require special accommodations due to a disability, please contact Victoria Ferretti-Aceto at least 7 days in advance of the meeting.

Notice of this meeting is given under the Federal Advisory Committee Act (5 U.S.C. app. 2).

Dated: February 26, 2007.

**Randall W. Lutter,**

*Associate Commissioner for Policy and Planning.*

[FR Doc. E7–3717 Filed 3–2–07; 8:45 am]

BILLING CODE 4160–01–S

## DEPARTMENT OF HEALTH AND HUMAN SERVICES

### Substance Abuse and Mental Health Services Administration

### Agency Information Collection Activities: Submission for OMB Review; Comment Request

Periodically, the Substance Abuse and Mental Health Services Administration (SAMHSA) will publish a summary of information collection requests under OMB review, in compliance with the Paperwork Reduction Act (44 U.S.C. Chapter 35). To request a copy of these documents, call the SAMHSA Reports Clearance Officer on (240) 276–1243.

*Project:* School Climate Survey for the National Cross-Site Evaluation of Safe School/Healthy Student (SS/HS) Initiative Grants–NEW.

The SS/HS Initiative is a collaborative grant program supported by three Federal departments—the U.S. Departments of Health and Human Services, Education, and Justice. The program is authorized under the Elementary and Secondary Education Act of 1965, as amended, and the Higher Education Act of 1965, Title IV, Part A, Subpart 2 (National Programs), Section 4121 (Federal Activities). It is also authorized under Section 581 of the Public Health Service Act.

This initiative, instituted by Congress following the murderous assaults at Columbine High School in Colorado, is designed to provide Local Educational Agencies (LEAs), including school districts and multi-district regional consortia, with 3 years of funding to simultaneously improve school safety, student access to mental health services, the reduction of violence and substance abuse, school relationships with the larger community, and early childhood preparation for learning. Collectively, Congress expects these changes to be reflected in improved school climate.

Local Education Agencies (LEAs) serve as the primary applicants for SS/HS grants, but the LEAs are required to establish formal partnerships with the local mental health system, the local law enforcement agency, and the local juvenile justice agency. Other partners often include public and private social services agencies, businesses, civic organizations, the faith community, and private citizens. As a result of these partnerships, comprehensive plans are developed, implemented, evaluated, and sustained with the goals of promoting the healthy development of children and youth, fostering their resilience in the face of adversity, and preventing violence.

From FY 1999 through FY 2004, grants of $1 million to $3 million annually for 3 years were awarded to 190 LEAs, for a total of $916 million. Approximately 40 new SS/HS grants were awarded in FY 2005. These grants are providing support for rural, tribal, suburban, and urban communities that include diverse racial and ethnic groups across the country.

In compliance with the Government Performance and Results Act (GPRA) of 1993, grantees are required to collect and report data that measure the results of the programs implemented with this grant. Specifically, grantees are required to collect and report information on the following GPRA indicators:

1. The percentage of SS/HS grant sites that experience a decrease in the number of violent incidents at schools.

2. The percentage of SS/HS grant sites that experience a decrease in substance abuse.

3. The percentage of SS/HS grant sites that improve school attendance.

4. The percentage of SS/HS grant sites that increase mental health services to students and families.

In addition to GPRA measures, the Federal Evaluation Work Group of the Safe School/Healthy Students (SS/HS) Initiative national evaluation, comprised of Federal officials representing the U.S. Departments of Education, Health and Human Services, and Justice, determined that information on changes in school climate is also required to provide a direct basis of comparison for performance with subsequent cohorts of grantees. Although GPRA measures monitor changes in individual outcomes among students, GPRA measures have been found to provide an incomplete metric of performance in terms of observed in changes in overall ''school climate.''

The SS/HS National Evaluation Team proposes to adopt the staff version of the California Healthy Kids Survey for this purpose. This instrument contains 43 multiple choice questions that are used to obtain school staff perceptions of student behavior and attitudes, school programs and policies, and the overall school climate as they relate to student well-being and learning. It deals with such issues as truancy, safety, harassment, substance abuse, school connectedness and learning supports. The instrument, modified slightly to form the SS/HS School Climate Survey, will track changes in school climate in schools targeted for program services under the SS/HS Initiative. In the absence of the School Climate Survey, there would be no common, cross-site measure of performance across SS/HS initiative grantees. In practice, the School Climate Survey will be administered electronically among approximately 67,500 local educational system employees. These employees will be encouraged to log onto a Web site during each year that their school benefits from the grant to answer questions concerning their perception of student behavior and safety at the school.

*The burden estimate for the annual survey is as follows:*

| Number of respondents | Responses per respondent | Burden/ response (hours) | Total annual burden (hours) |
|---|---|---|---|
| 70,875 | 1 | 0.117 | 8,269 |

Written comments and recommendations concerning the proposed information collection should be sent by April 4, 2007 to: SAMHSA Desk Officer, Human Resources and Housing Branch, Office of Management and Budget, New Executive Office Building, Room 10235, Washington, DC 20503; due to potential delays in OMB's receipt and processing of mail sent through the U.S. Postal Service, respondents are encouraged to submit comments by fax to: 202–395–6974.

Dated: February 27, 2007.

**Patricia S. Bransford,**

*Acting Director, Office of Program Services.*

[FR Doc. E7–3764 Filed 3–2–07; 8:45 am]

**BILLING CODE 4162–20–P**

## DEPARTMENT OF HOMELAND SECURITY

### U.S. Citizenship and Immigration Services

### Agency Information Collection Activities: Revision of an Existing Information Collection; Comment Request

**ACTION:** 60-day notice of information collection under review; Form I–824, Application for Action on an Approved Application or Petition; OMB Control No. 1615–0044.

The Department of Homeland Security, U.S. Citizenship and Immigrations Services (USCIS) has submitted the following information collection request for review and clearance in accordance with the Paperwork Reduction Act of 1995. The proposed information collection is published to obtain comments from the public and affected agencies. Comments are encouraged and will be accepted for sixty days until May 4, 2007.

Written comments and suggestions regarding items contained in this notice, and especially with regard to the estimated public burden and associated response time should be directed to the Department of Homeland Security (DHS), USCIS, Chief, Regulatory Management Division, Clearance Office, 111 Massachusetts Avenue, NW., 3rd Floor, Suite 3008, Washington, DC 20529. Comments may also be submitted to DHS via facsimile to 202–272–8352, or via e-mail at *rfs.regs@dhs.gov.* When submitting comments by e-mail, please add the OMB Control No. 1615–0044 in the subject box.

Written comments and suggestions from the public and affected agencies concerning the proposed collection of information should address one or more of the following four points:

(1) Evaluate whether the collection of information is necessary for the proper performance of the functions of the agency, including whether the information will have practical utility;

(2) Evaluate the accuracy of the agencies estimate of the burden of the collection of information, including the validity of the methodology and assumptions used;

(3) Enhance the quality, utility, and clarity of the information to be collected; and

(4) Minimize the burden of the collection of information on those who are to respond, including through the use of appropriate automated, electronic, mechanical, or other technological collection techniques or other forms of information technology, e.g., permitting electronic submission of responses.

**Overview of This Information Collection**

(1) *Type of Information Collection:* Revision of an existing information collection.

(2) *Title of the Form/Collection:* Application for Action on an Approved Application or Petition.

(3) *Agency form number, if any, and the applicable component of the Department of Homeland Security sponsoring the collection:* Form I–824. U.S. Citizenship and Immigration Services.

(4) *Affected public who will be asked or required to respond, as well as a brief abstract: Primary:* Individuals or Households. The Form I–824 facilitates a request from a petitioner or applicant for further action on a previously approved petition or application, or it can be used by a U.S. citizen to notify the Department of State of his or her U.S. citizenship status.

(5) *An estimate of the total number of respondents and the amount of time estimated for an average respondent to respond:* 43,772 responses at 25 minutes (.416 hours) per response.

(6) *An estimate of the total public burden (in hours) associated with the collection:* 18,209 annual burden hours.

If you have additional comments, suggestions, or need a copy of the information collection instrument, please contact Richard A. Sloan, Chief, Regulatory Management Division, U.S. Citizenship and Immigration Services, 111 Massachusetts Avenue, NW., 3rd Floor, Suite 3008, Washington, DC 20529; Telephone Number 202–272–8377.

Dated: February 28, 2007.

**Richard A. Sloan,**

*Chief, Regulatory Management Division, U.S. Citizenship and Immigration Services, Department of Homeland Security.*

[FR Doc. E7–3779 Filed 3–2–07; 8:45 am]

BILLING CODE 4410–10–P

## DEPARTMENT OF HOMELAND SECURITY

### U.S. Citizenship and Immigration Services

### Agency Information Collection Activities: Extension of a Currently Approved Information Collection; Comment Request

**ACTION:** 60-Day Notice of Information Collection Under Review: Form I–777, Application for Issuance or Replacement of Northern Mariana Card; OMB Control No. 1615–0042.

The Department of Homeland Security, U.S. Citizenship and Immigration Services has submitted the following information collection request for review and clearance in accordance with the Paperwork Reduction Act of 1995. The information collection is published to obtain comments from the public and affected agencies. Comments are encouraged and will be accepted for sixty days until May 4, 2007.

Written comments and suggestions regarding items contained in this notice, and especially with regard to the estimated public burden and associated response time should be directed to the Department of Homeland Security (DHS), USCIS, Chief, Regulatory Management Division, Clearance Office, 111 Massachusetts Avenue, NW., 3rd Floor, Suite 3008, Washington, DC 20529. Comments may also be submitted to DHS via facsimile to 202–272–8352, or via e-mail at *rfs.regs@dhs.gov*. When submitting comments by e-mail please add the OMB Control No. 1615–0042 in the subject box.

Written comments and suggestions from the public and affected agencies concerning the proposed collection of information should address one or more of the following four points:

(1) Evaluate whether the proposed collection of information is necessary for the proper performance of the functions of the agency, including whether the information will have practical utility;

(2) Evaluate the accuracy of the agencies estimate of the burden of the proposed collection of information, including the validity of the methodology and assumptions used;

(3) Enhance the quality, utility, and clarity of the information to be collected; and

(4) Minimize the burden of the collection of information on those who are to respond, including through the use of appropriate automated, electronic, mechanical, or other technological collection techniques or other forms of information technology, e.g., permitting electronic submission of responses.

**Overview of This Information Collection**

(1) *Type of Information Collection:* Extension of a currently approved information collection.

(2) *Title of the Form/Collection:* Application for Issuance or Replacement of Northern Mariana Card.

(3) *Agency form number, if any, and the applicable component of the Department of Homeland Security sponsoring the collection:* Form I–777. U.S. Citizenship and Immigration Services.

(4) *Affected public who will be asked or required to respond, as well as a brief abstract: Primary:* Individuals or Households. This information collection is used by applicants to applying for a Northern Mariana identification card if they received United States citizenship pursuant to Public Law 94–241 (Covenant to Establish a Commonwealth of the Northern Mariana Islands).

(5) *An estimate of the total number of respondents and the amount of time estimated for an average respondent to respond:* 100 responses at 30 minutes (.50 hours) per response.

(6) *An estimate of the total public burden (in hours) associated with the collection:* 50 annual burden hours.

If you have additional comments, suggestions, or need a copy of the proposed information collection instrument, please contact Richard A. Sloan, Chief, Regulatory Management Division, U.S. Citizenship and Immigration Services, 111 Massachusetts Avenue, NW., 3rd Floor, Suite 3008, Washington, DC 20529; Telephone No. 202–272–8377.

Dated: February 28, 2007.

**Richard A. Sloan,**

*Chief, Regulatory Management Division, U.S. Citizenship and Immigration Services, Department of Homeland Security.*

[FR Doc. E7–3780 Filed 3–2–07; 8:45 am]

BILLING CODE 4410–10–P

## DEPARTMENT OF HOMELAND SECURITY

### U.S. Citizenship and Immigration Services

### Agency Information Collection Activities: Extension of an Approved Information Collection; Comment Request

**ACTION:** 60-Day Notice of Information Collection Under Review: Form I–102, Application for Replacement/Initial Nonimmigrant Arrival-Departure Document; OMB Control No.1615–0079.

The Department of Homeland Security, U.S. Citizenship and Immigration Services has submitted the following information collection request for review and clearance in accordance with the Paperwork Reduction Act of 1995. The information collection is published to obtain comments from the public and affected agencies. Comments are encouraged and will be accepted for sixty days until May 4, 2007.

Written comments and suggestions regarding items contained in this notice, and especially with regard to the estimated public burden and associated response time should be directed to the Department of Homeland Security (DHS), USCIS, Chief, Regulatory Management Division, Clearance Office,

111 Massachusetts Avenue, NW., 3rd Floor, Suite 3008, Washington, DC 20529. Comments may also be submitted to DHS via facsimile to 202–272–8352, or via e-mail at *rfs.regs@dhs.gov.* When submitting comments by e-mail please add the OMB Control No. 1615–0079 in the subject box.

Written comments and suggestions from the public and affected agencies concerning the proposed collection of information should address one or more of the following four points:

(1) Evaluate whether the collection of information is necessary for the proper performance of the functions of the agency, including whether the information will have practical utility;

(2) Evaluate the accuracy of the agencies estimate of the burden of the proposed collection of information, including the validity of the methodology and assumptions used;

(3) Enhance the quality, utility, and clarity of the information to be collected; and

(4) Minimize the burden of the collection of information on those who are to respond, including through the use of appropriate automated, electronic, mechanical, or other technological collection techniques or other forms of information technology, e.g., permitting electronic submission of responses.

**Overview of This Information Collection**

(1) *Type of Information Collection:* Extension of a currently approved information collection.

(2) *Title of the Form/Collection:* Application for Replacement/Initial Nonimmigrant Arrival-Departure Document.

(3) *Agency form number, if any, and the applicable component of the Department of Homeland Security sponsoring the collection:* Form I–102. U.S. Citizenship and Immigration Services.

(4) *Affected public who will be asked or required to respond, as well as a brief abstract*: *Primary:* Individuals or Households. This information collection will be used by an alien temporarily residing in the United States to request a replacement of his or her arrival evidence. The information provided can be used to verify status and for determination as to the eligibility of the applicant.

(5) *An estimate of the total number of respondents and the amount of time estimated for an average respondent to respond:* 12,195 responses at 25 minutes (.416 hours) per response.

(6) *An estimate of the total public burden (in hours) associated with the collection:* 5,073 annual burden hours.

If you have additional comments, suggestions, or need a copy of the proposed information collection instrument, please contact Richard A. Sloan, Chief, Regulatory Management Division, U.S. Citizenship and Immigration Services, 111 Massachusetts Avenue, NW., 3rd Floor, Suite 3008, Washington, DC 20529; Telephone No. 202–272–8377.

Dated: February 28, 2007.

**Richard A. Sloan,**

*Chief, Regulatory Management Division, U.S. Citizenship and Immigration Services, Department of Homeland Security.*

[FR Doc. E7–3781 Filed 3–2–07; 8:45 am]

BILLING CODE 4410–10–P

## DEPARTMENT OF THE INTERIOR

### Fish and Wildlife Service

### Receipt of Applications for Permit

**AGENCY:** Fish and Wildlife Service, Interior.

**ACTION:** Notice of receipt of applications for permit.

**SUMMARY:** The public is invited to comment on the following applications to conduct certain activities with endangered species.

**DATES:** Written data, comments or requests must be received by April 4, 2007.

**ADDRESSES:** Documents and other information submitted with these applications are available for review, subject to the requirements of the Privacy Act and Freedom of Information Act, by any party who submits a written request for a copy of such documents within 30 days of the date of publication of this notice to: U.S. Fish and Wildlife Service, Division of Management Authority, 4401 North Fairfax Drive, Room 700, Arlington, Virginia 22203; fax 703/358–2281.

**FOR FURTHER INFORMATION CONTACT:** Division of Management Authority, telephone 703/358–2104.

**SUPPLEMENTARY INFORMATION:**

**Endangered Species**

The public is invited to comment on the following applications for a permit to conduct certain activities with endangered species. This notice is provided pursuant to section 10(c) of the Endangered Species Act of 1973, as amended (16 U.S.C. 1531 *et seq.*). Written data, comments, or requests for copies of these complete applications should be submitted to the Director (address above).

*Applicant:* Sierra Endangered Cat Haven, Dunlap, CA, PRT–135919.

The applicant requests a permit to import two captive-born male cheetahs (*Acinonyx jubatus*) from the DeWildt Cheetah and Wildlife Trust, South Africa for the purpose of enhancement of the survival of the species.

*Applicant:* Nashville Zoo, Nashville, TN, PRT–145446.

The applicant requests a permit to import two males and two female captive-born clouded leopards (*Neofelis nebulosa*) from Khao Kheow Open Zoo, Chonburi, Thailand for the purpose of enhancement of the species through captive breeding.

*Applicant:* Panther Ridge Sanctuary, Wellington, FL, PRT–128590.

The applicant requests a permit to import two captive-born male cheetahs (*Acinonyx jubatus*) from the Savannah Cheetah Foundation, South Africa for the purpose of enhancement of the survival of the species.

*Applicant:* U.S. Geological Survey, National Wildlife Health Center, Madison, WI, PRT–048370.

The applicant requests a permit to import multiple shipments of biological samples from wild or captive-held, or captive-born specimens of any endangered species for the purpose of scientific research. No animals can be intentionally killed for the purpose of collecting specimens. Any invasively collected sample can only be collected by trained personnel. This notification covers activities conducted by the applicant over a period of 5 years.

*Applicant:* Wildlife Conservation Society, Field Veterinary Program, Bronx, NY, PRT–033594.

The applicant requests a permit to import multiple shipments of biological samples from wild or captive-held or captive-born specimens of any endangered species for the purpose of scientific research. No animals can be intentionally killed for the purpose of collecting specimens. Any invasively collected sample can only be collected by trained personnel. This notification covers activities conducted by the applicant over a period of 5 years.

*Applicant:* University of Florida, Museum of Natural History, Gainesville, FL, PRT–146577.

The applicant requests a permit to import biological samples from Nile Crocodile (*Crocodylus niloticus*), slender-snouted crocodile (*Crocodylus cataphractus*) and dwarf crocodile (*Osteolaemus tetraspis*) collected from

both wild and captive animals in Cote D' Ivoire and Ghana, for the purpose of scientific research.

*Applicant:* Memphis Zoo, Memphis, TN, PRT–146704.

The applicant requests a permit to import one captive-born male Sumatran orangutan (*Pongo pygmaeus abelii*) from the Toronto Zoo, Ontario, Canada, for the purpose of enhancement of the survival of the species and captive propagation.

*Applicant:* Robert H. Clark, Spring Lake, MI, PRT–146530.

The applicant requests a permit to import the sport-hunted trophy of one male bontebok (*Damaliscus pygargus pygargus*) culled from a captive herd maintained under the management program of the Republic of South Africa, for the purpose of enhancement of the survival of the species.

*Applicant:* Nicholas H. Altman, Houston, TX, PRT–143415.

The applicant requests a permit to import the sport-hunted trophy of one male bontebok (*Damaliscus pygargus pygargus*) culled from a captive herd maintained under the management program of the Republic of South Africa, for the purpose of enhancement of the survival of the species.

*Applicant:* Mark D. Crowther, Lilburn, GA, PRT–144846.

The applicant requests a permit to import the sport-hunted trophy of one male bontebok (*Damaliscus pygargus pygargus*) culled from a captive herd maintained under the management program of the Republic of South Africa, for the purpose of enhancement of the survival of the species.

*Applicant:* New York State Museum, Albany, NY, PRT–140174.

The applicant requests a permit to export and re-import non-living museum specimens of endangered and threatened species previously accessioned into the applicant's collection for scientific research. This notification covers activities to be conducted by the applicant over a five-year period.

Dated: February 9, 2007.

**Michael L. Carpenter,**

*Senior Permit Biologist, Branch of Permits, Division of Management Authority.*

[FR Doc. E7–3736 Filed 3–2–07; 8:45 am]

BILLING CODE 4310–55–P

## DEPARTMENT OF THE INTERIOR

### Fish and Wildlife Service

### Draft Environmental Assessment/ Habitat Conservation Plan; Issuance of a Section 10(a)(1)(B) Permit for Incidental Take of the Golden-Cheeked Warbler in Williamson County, TX (CA 1100, LTD.)

**AGENCY:** Fish and Wildlife Service, Interior.

**ACTION:** Notice of availability; receipt of application.

**SUMMARY:** CA 1100, LTD. (Applicant) has applied to the U.S. Fish and Wildlife Service (Service) for an incidental take permit (TE–139553–0) pursuant to Section 10(a)(1)(B) of the Endangered Species Act (Act) of 1973, as amended. The requested permit, which is for a period of 30 years, would authorize incidental take of the golden-cheeked warbler (*Dendroica chrysoparia*). The proposed take would occur as a result of the construction and occupation of a residential development on 176 acres of the Shadow Canyon property, Williamson County, Texas. We invite public comment.

**DATES:** To ensure consideration, written comments must be received on or before May 4, 2007.

**ADDRESSES:** Persons wishing to review the application may obtain a copy by writing to the Regional Director, U.S. Fish and Wildlife Service, P.O. Box 1306, Room 4102, Albuquerque, New Mexico 87103. Persons wishing to review the draft Environmental Assessment/Habitat Conservation Plan (EA/HCP) may obtain a copy by contacting William Amy, U.S. Fish and Wildlife Service, 10711 Burnet Road, Suite 200, Austin, Texas 78758 (512–490–0057). Documents will be available for public inspection by written request, by appointment only, during normal business hours (8 a.m. to 4:30 p.m.) at the Service's Austin office. Written data or comments concerning the application and draft EA/HCP should be submitted to the Supervisor, U.S. Fish and Wildlife Service, 10711 Burnet Road, Suite 200, Austin, Texas 78758. Please refer to permit number TE–139553–0 when submitting comments. All comments received, including names and addresses, will become a part of the official administrative record and may be made available to the public.

**FOR FURTHER INFORMATION CONTACT:** William Amy at U.S. Fish and Wildlife Service Austin office, 10711 Burnet Road, Suite 200, Austin, Texas 78758 (512–490–0057) or by e-mail, *William_Amy@fws.gov*.

**SUPPLEMENTARY INFORMATION:** The Applicant has applied to the Service for a Section 10(a)(1)(B) incidental take permit for a period of 30 years in order to authorize incidental take of the golden-cheeked warbler.

Section 9 of the Act prohibits the ''taking'' of endangered species such as the golden-cheeked warbler. However, the Service, under limited circumstances, may issue permits to take endangered wildlife species incidental to, and not the purpose of, otherwise lawful activities.

We provide this notice under section 10(c) of the Act (16 U.S.C. 1531 *et seq.*) and its implementing regulations (50 CFR 17.22), and the National Environmental Policy Act (42 U.S.C. 4371 *et seq.*) and its implementing regulations (40 CFR 1506.6).

*Applicant:* The Applicant plans to construct a residential and commercial development on the 176-acre property located on Shadow Canyon property, Williamson County, Texas. This action will adversely affect 70.1 acres of oak-juniper woodland resulting in take of three pairs of golden-cheeked warblers. The Applicant proposes to mitigate for incidental take of the golden-cheeked warbler by purchasing 97 mitigation credits from a conservation bank approved by the Service to preserve 97 acres of golden-cheeked warbler habitat in perpetuity within the acquisition area of the Balcones Canyonlands National Wildlife Refuge.

**Christopher T. Jones,**

*Acting Regional Director, Region 2, Albuquerque, New Mexico.*

[FR Doc. E7–3766 Filed 3–2–07; 8:45 am]

BILLING CODE 4510–55–P

## DEPARTMENT OF THE INTERIOR

### Fish and Wildlife Service

### Draft Environmental Assessment/ Habitat Conservation Plan; Receipt of Application for Incidental Take of the Houston Toad in Bastrop County, TX (Combs Lot 3)

**AGENCY:** Fish and Wildlife Service, Interior.

**ACTION:** Notice of availability; receipt of application.

**SUMMARY:** Lee Combs (Applicant) has applied to the U.S. Fish and Wildlife Service (Service) for an incidental take permit (TE–141969–0) pursuant to Section 10(a)(1)(B) of the Endangered Species Act (Act) of 1973, as amended. The requested permit, which is for a period of five years, would authorize incidental take of the Houston toad

(Bufo houstonensis). The proposed take would occur as a result of the construction and occupation of commercial development on Lot 3, a 1.15-acre property located on Highway 71 in the Tahitian Village Subdivision, Bastrop County, Texas. We invite public comment.

**DATES:** To ensure consideration, written comments must be received on or before April 4, 2007.

**ADDRESSES:** Persons wishing to review the application may obtain a copy by writing to the Regional Director, U.S. Fish and Wildlife Service, P.O. Box 1306, Room 4102, Albuquerque, New Mexico 87103. Persons wishing to review the draft EA/HCP may obtain a copy by contacting Clayton Napier, U.S. Fish and Wildlife Service, 10711 Burnet Road, Suite 200, Austin, Texas 78758 (512/490–0057). Documents will be available for public inspection by written request, by appointment only, during normal business hours (8 a.m. to 4:30 p.m.) at the Service's Austin office. Written data or comments concerning the application and draft EA/HCP should be submitted to the Supervisor, U.S. Fish and Wildlife Service, 10711 Burnet Road, Suite 200, Austin, Texas 78758. Please refer to permit number TE–141969–0 when submitting comments. All comments received, including names and addresses, will become a part of the official administrative record and may be made available to the public.

**FOR FURTHER INFORMATION CONTACT:** Clayton Napier at U.S. Fish and Wildlife Service Austin office, 10711 Burnet Road, Suite 200, Austin, Texas 78758 (512/490–0057) or by e-mail, *Clayton_Napier@fws.gov*.

**SUPPLEMENTARY INFORMATION:** The Applicant has applied to the Service for a Section 10(a)(1)(B) incidental take permit for a period of five years in order to authorize incidental take of the Houston toad.

Section 9 of the Act prohibits the ''taking'' of endangered species such as the Houston toad. However, the Service, under limited circumstances, may issue permits to take endangered wildlife species incidental to, and not the purpose of, otherwise lawful activities.

We provide this notice under section 10(c) of the Act (16 U.S.C. 1531 *et seq.*) and its implementing regulations (50 CFR 17.22), and the National Environmental Policy Act (42 U.S.C. 4371 *et seq.*), and its implementing regulations (40 CFR 1506.6).

*Applicant:* The Applicant is proposing general commercial development and construction activities on Lot 3, a 1.15-acre property located on Highway 71 in the Tahitian Village Subdivision, Bastrop County, Texas.

This action will eliminate up to 1.15 acres of Houston toad habitat and result in indirect impacts within the lot. The Applicant proposes to compensate for incidental take of the Houston toad by providing $3,450.00 to the Houston Toad Conservation Fund at the National Fish and Wildlife Foundation for the specific purpose of land acquisition and management within Houston toad habitat.

**Christopher T. Jones,**

*Acting Regional Director, Region 2, Albuquerque, New Mexico.*

[FR Doc. E7–3767 Filed 3–2–07; 8:45 am]

**BILLING CODE 4510–55–P**

---

## DEPARTMENT OF THE INTERIOR

### Fish and Wildlife Service

### Draft Environmental Assessment/ Habitat Conservation Plan; Receipt of Application for Incidental Take of the Houston Toad in Bastrop County, TX (Combs Lot 2)

**AGENCY:** Fish and Wildlife Service, Interior.

**ACTION:** Notice of availability; receipt of application.

**SUMMARY:** Lee Combs (Applicant) has applied to the U.S. Fish and Wildlife Service (Service) for an incidental take permit (TE–141705–0) pursuant to Section 10(a)(1)(B) of the Endangered Species Act (Act) of 1973, as amended. The requested permit, which is for a period of five years, would authorize incidental take of the Houston toad (*Bufo houstonensis*). The proposed take would occur as a result of the construction and occupation of commercial development on Lot 2, a 0.75-acre property located on Highway 71 in the Tahitian Village Subdivision, Bastrop County, Texas. We invite public comment.

**DATES:** To ensure consideration, written comments must be received on or before April 4, 2007.

**ADDRESSES:** Persons wishing to review the application may obtain a copy by writing to the Regional Director, U.S. Fish and Wildlife Service, P.O. Box 1306, Room 4102, Albuquerque, New Mexico 87103. Persons wishing to review the draft EA/HCP may obtain a copy by contacting Clayton Napier, U.S. Fish and Wildlife Service, 10711 Burnet Road, Suite 200, Austin, Texas 78758 (512/490–0057). Documents will be available for public inspection by written request, by appointment only, during normal business hours (8 a.m. to 4:30 p.m.) at the Service's Austin office. Written data or comments concerning the application and draft EA/HCP should be submitted to the Supervisor, U.S. Fish and Wildlife Service, 10711 Burnet Road, Suite 200, Austin, Texas 78758. Please refer to permit number TE–141705–0 when submitting comments. All comments received, including names and addresses, will become a part of the official administrative record and may be made available to the public.

**FOR FURTHER INFORMATION CONTACT:** Clayton Napier at U.S. Fish and Wildlife Service Austin office, 10711 Burnet Road, Suite 200, Austin, Texas 78758 (512/490–0057) or by e-mail, *Clayton_Napier@fws.gov*.

**SUPPLEMENTARY INFORMATION:** The Applicant has applied to the Service for a Section 10(a)(1)(B) incidental take permit for a period of five years in order to authorize incidental take of the Houston toad.

Section 9 of the Act prohibits the ''taking'' of endangered species such as the Houston toad. However, the Service, under limited circumstances, may issue permits to take endangered wildlife species incidental to, and not the purpose of, otherwise lawful activities.

We provide this notice under section 10(c) of the Act (16 U.S.C. 1531 *et seq.*) and its implementing regulations (50 CFR 17.22), and the National Environmental Policy Act (42 U.S.C. 4371 *et seq.*), and its implementing regulations (40 CFR 1506.6).

*Applicant:* The Applicant is proposing general commercial development and construction activities on Lot 2, a 0.75-acre property located on Highway 71 in the Tahitian Village Subdivision, Bastrop County, Texas. This action will eliminate up to 0.75 acres of Houston toad habitat and result in indirect impacts within the lot. The Applicant proposes to compensate for incidental take of the Houston toad by providing $2,250.00 to the Houston Toad Conservation Fund at the National Fish and Wildlife Foundation for the specific purpose of land acquisition and management within Houston toad habitat.

**Christopher T. Jones,**

*Acting Regional Director, Region 2, Albuquerque, New Mexico.*

[FR Doc. E7–3768 Filed 3–2–07; 8:45 am]

**BILLING CODE 4510–55–P**

## DEPARTMENT OF THE INTERIOR

### Bureau of Indian Affairs

### Land Acquisitions; Cherokee Nation of Oklahoma

**AGENCY:** Bureau of Indian Affairs, Interior.

**ACTION:** Notice of final agency determination to take land into trust under 25 CFR part 151.

**SUMMARY:** The Associate Deputy Secretary made a final agency determination to acquire approximately 3.519 acres of land into trust for the Cherokee Nation of Oklahoma on February 9, 2007. This notice is published in the exercise of authority delegated by the Secretary of the Interior to the Principal Deputy Assistant Secretary—Indian Affairs by 209 Departmental Manual 8.

**FOR FURTHER INFORMATION CONTACT:** George Skibine, Office of Indian Gaming, 1849 C Street, NW., Mail Stop 3657–MIB, Washington, DC 20240; Telephone (202) 219–4066.

**SUPPLEMENTARY INFORMATION:** This notice is published to comply with the requirement of 25 CFR part 151.12(b) that notice be given to the public of the Secretary's decision to acquire land in trust at least 30 days prior to signatory acceptance of the land into trust. The purpose of the 30-day waiting period in 25 CFR part 151.12(b) is to afford interested parties the opportunity to seek judicial review of final administrative decisions to take land in trust for Indian tribes and individual Indians before transfer of title to the property occurs. On February 9, 2007, the Associate Deputy Secretary decided to accept approximately 3.519 acres of land into trust for the Cherokee Nation of Oklahoma under the authority of the Indian Reorganization Act of 1934, 25 U.S.C. 465. The 3.519 parcel is located within the former reservation boundaries of the Cherokee Nation near the City of Roland, Sequoyah County, Oklahoma. The parcel will be used as additional parking for the Cherokee Casino facility.

The 3.519 acre parcel is located near the City of Roland, Sequoyah County, Oklahoma is described as follows:

Part of the SW ¼ SW ¼ of Section 23, Township 11 North, Range 26 East, Sequoyah County, Oklahoma, being more particularly described as follows:

Commencing at the Southwest corner of the N ½ SW ¼ SW ¼ of said Section 23; thence East along the South line of N ½ SW ¼ SW ¼ of, 660.00 feet; thence North 00°52′00″ East 454.22 feet to the North line of the SW ¼ SW ¼; thence South 89°45′59″ East along said North line, 334.64 feet; thence South 452.78 feet; thence South 89°59′47″ West 341.52 feet to the Point of Beginning, containing 3.519 acres, more or less, Less and Except minerals.

Dated: February 9, 2007.

**Michael D. Olsen,**

*Principal Deputy Assistant Secretary—Indian Affairs.*

[FR Doc. E7–3715 Filed 3–2–07; 8:45 am]

BILLING CODE 4310–4N–P

## DEPARTMENT OF THE INTERIOR

### National Park Service

### Draft General Management Plan and Environmental Impact Statement for Pipestone National Monument, Minnesota; Notice of Availability

**AGENCY:** National Park Service, Department of the Interior.

**ACTION:** Notice.

**SUMMARY:** Pursuant to section 102(2)(C) of the National Environmental Policy Act of 1969, the National Park Service announces the availability of the draft General Management Plan and Environmental Impact Statement (GMP/EIS) for Pipestone National Monument.

**DATES:** The GMP/EIS will remain available for public review for 60 days following the publishing of the notice of availability in the **Federal Register** by the Environmental Protection Agency. Public meetings will be held in the cities of Pierre and Yankton, South Dakota, and Marshall and Pipestone, Minnesota. Meeting places and times will be announced through the local media and on the park Web site at: *http://www.nps.gov.gov/pipe.*

**ADDRESSES:** Copies of the GMP/EIS are available by request by writing to the Superintendent at Pipestone National Monument, 36 Reservation Avenue, Pipestone, MN 56164. The document is also available to be reviewed in person at the park. Finally, the document can be found at the following Web site: *http://parkplanning.nps.gov/.* This Web site allows the public to review and comment directly on this document.

**FOR FURTHER INFORMATION CONTACT:** Superintendent, Pipestone National Monument, 36 Reservation Avenue, Pipestone, MN 56164.

**SUPPLEMENTARY INFORMATION:** Pipestone National Monument offers an opportunity to explore American Indian culture and the natural resources of the tallgrass prairie. Established by Congress in 1937 to protect the historic pipestone quarries, the site is considered sacred by many American Indians. Spanning centuries of use, American Indians continue to quarry pipestone, which they carve into sacred pipes.

The GMP/EIS analyzes the impacts of a no-action and three action alternatives. The no-action alternative describes the existing conditions and trends of park management and serves as a basis for comparison in evaluating the other alternatives. The focus of alternative one is the removal of development from the heart of the national monument. Alternative two focuses on updating the existing facilities and increasing the interpretive emphasis on quarrying. Alternative three was developed to meld the most advantageous features of the other two action alternatives by removing some park operations from the national monument and updating existing facilities.

Persons wishing to comment may do so by any one of several methods. They may attend the public hearing or open houses noted above. They may mail comments directly to Pipestone National Monument. They also may comment via the Web site at *http://parkplanning.nps.gov/.* Finally, they may hand-deliver comments to the Pipestone National Monument in Pipestone, Minnesota.

Before including your address, telephone number, e-mail address, or other personal identifying information in your comments please be aware that your entire comment—including your personal identifying information—may be made publicly available at any time. While you can ask us in your comments to withhold your personal identifying information from public review, we cannot guarantee that we will be able to do so. We will make all submissions from organizations or businesses and from individuals identifying themselves as representatives or officials or organizations or businesses available for public inspection in their entirety.

The responsible official is Ernest Quintana, Regional Director, Midwest Region.

Dated: November 29, 2006.

**David N. Given,**

*Acting Regional Director, Midwest Region.*

[FR Doc. E7–3769 Filed 3–2–07; 8:45 am]

BILLING CODE 4312–AA–P

## DEPARTMENT OF THE INTERIOR

### National Park Service

### National Register of Historic Places; Notification of Pending Nominations and Related Actions

Nominations for the following properties being considered for listing

or related actions in the National Register were received by the National Park Service before February 17, 2007. Pursuant to section 60.13 of 36 CFR Part 60 written comments concerning the significance of these properties under the National Register criteria for evaluation may be forwarded by United States Postal Service, to the National Register of Historic Places, National Park Service, 1849 C St. NW., 2280, Washington, DC 20240; by all other carriers, National Register of Historic Places, National Park Service,1201 Eye St. NW., 8th Floor, Washington, DC 20005; or by fax, 202–371–6447. Written or faxed comments should be submitted by March 20, 2007.

**Patrick W. Andrus,**

*Acting Chief, National Register of Historic Places/National, Historic Landmarks Program.*

**ARKANSAS**

**Garland County**

CCC Company 3767 Powder Magazine Historic District, (Facilities Constructed by the CCC in Arkansas MPS), K59P Rd. N of Forest Service Rd. 11 (Gladstone Rd., Jessieville, 07000200

**Montgomery County**

CCC Company 741 Powder Magazine Historic District, (Facilities Constructed by the CCC in Arkansas MPS), Forest Service Rd. 177M NE of Norman, Norman, 07000201

**Newton County**

Archeological Site 3NW79, (Rock Art Sites in Arkansas TR), Address Restricted, Cowell, 07000202

**Polk County**

Buckeye Vista Overlook, (Facilities Constructed by the CCC in Arkansas MPS), Forest Service Rd. 38, Athens, 07000204

Sugar Creek Vista Overlook, (Facilities Constructed by the CCC in Arkansas MPS), Forest Service Rd. 38, Athens, 07000205

**Pope County**

Archeological Site 3PP614, (Rock Art Sites in Arkansas TR), Address Restricted, Sand Gap, 07000203

**Yell County**

CCC Company 749 Powder Magazine, (Facilities Constructed by the CCC in Arkansas MPS), N of Forest Service Rd. 4128 and S of Briggsville, Briggsville, 07000199

**INDIANA**

**Allen County**

Forest Park Boulevard Historic District, Roughly bounded by Dodge Ave., the alley bet. Forest Park Blvd. and Anthony Blvd, Lake Ave. and the alley, Fort Wayne, 07000212

**Clark County**

Spring Street Freight House, 1030 Spring St., Jeffersonville, 07000209

**Greene County**

Linton Commercial Historic District, Roughly bounded by B St. N, 1st St. E, A St. S, 1st St. W, Linton, 07000214

**Lake County**

Crown Point Courthouse Square Historic District (Boundary Increase II), 208 Main St, Crown Point, 07000210

**Porter County**

Young, Martin, House, 324 Second St., Chesterton, 07000208

**Randolph County**

Fudge Site, Address Restricted, Winchester, 07000213

**St. Joseph County**

North Liberty Park, (New Deal Resources in Indiana State Parks MPS), 309 N. Jefferson St., North Liberty, 07000211

**IOWA**

**Marion County**

First Christian Church, 824 Franklin St., Pella, 07000206

**Woodbury County**

Overseen, Julius and Anine House, 2037 S. Lemon St., Sioux City, 07000207

**NORTH CAROLINA**

**Vance County**

Machpelah, 12079 NC 39, approx. 0.5 mi. S of Townsville, Townsville, 07000215

**PENNSYLVANIA**

**Berks County**

Rhoads—Lorah House and Barn, 1832 Old Swede Rd., Amity Township, 07000216

**SOUTH CAROLINA**

**Calhoun County**

Fort Motte (38CL1), 0.75 mi. from N. end of Lang Syne Rd., St. Matthews, 07000221

**Clarendon County**

James Building, 124–126 Main St., Summerton, 07000222

**TEXAS**

**Parker County**

Byron Farmstead, 905 Meadowview Rd., Weatherford, 07000217

**VIRGINIA**

**Albemarle County**

Mechum River Farm, 1207 Burchs Creek Rd., Charlottesville, 07000235

**Amherst County**

Forest Hill, 713 Indian Creek Rd., Amherst, 07000218

**Carroll County**

Buffalo Mountain Presbyterian Church and Cemetery, (Reverend Robert Childress Presbyterian Churches MPS), 2102 Childress Rd., Willis, 07000229

Dinwiddie Presbyterian Church and Cemetery, (Reverend Robert Childress Presbyterian Churches MPS), 2698 Homestead Rd., Hillsville, 07000228

**Fairfax County**

Holmes Run Acres Historic District, Area generally bounded by Gallows Rd., Surrey Ln, and Holmes Run Dr., Falls Church, 07000230

**Floyd County**

Slate Mountain Presbyterian Church and Cemetery, (Reverend Robert Childress Presbyterian Churches MPS), 2121 Lonesome Dove Dr., Christiansburg, 07000227

Willis Presbyterian Church and Cemetery, (Reverend Robert Childress Presbyterian Churches MPS), 5733 Floyd Hwy S, Willis, 07000226

**Henry County**

Edgewood, 150 Old Stage Rd., Stanleytown, 07000231

**James City County**

White Hall, 3200 Rochambeau Rd., Toano, 07000234

**Lunenburg County**

Eubank Hall, 319 Eubank Rd., Fort Mitchell, 07000233

**Nelson County**

Elk Hill, 511 Rockfish Valley Hwy, Nellysford, 07000220

**Norton Independent City**

Roanoke Downtown Historic District (Boundary Increase), 310–324 Salem Ave. SW, Roanoke (Independent City), 07000232

**Patrick County**

Bluemont Presbyterian Church and Cemetery, (Reverend Robert Childress Presbyterian Churches MPS), Blue Ridge Pkwy, Mile Post #192, Fancy Gap, 07000224

Mayberry Presbyterian Church, (Reverend Robert Childress Presbyterian Churches MPS), 1127 Mayberry Church Rd., Meadows of Dan, 07000225

**Richmond Independent City**

Broad Street Commercial Historic District (Boundary Increase II), 100 Blk of E. Marshall St., S side. 300 Blks 1st and 2nd Sts. bet. Broad and Marshall Sts., Richmond (Independent City), 07000219

**Rockbridge County**

Poague, Margaret E., House, 4907 S. Lee Hwy (US 11), Lexington, 07000236

**WEST VIRGINIA**

**Cabell County**

Downtown Huntington Historic District, Portions of Third Ave. to the alley bet. Sixth and Seventh Aves. and from Twelth St. to Seventh St., Huntington, 07000240

**Jackson County**

Ravenswood ''Old Town'' Historic District, Bounded by Sandy Creek, the Ohio R, Sycamore St. and adjoining properties and the city limits to the east, Ravenswood, 07000243

**Jefferson County**

Barleywood, Ambler Rd., Approx. 1 mi. N of WV 51, Charles Town, 07000241

Cool Spring Farm, 1735 Lloyd Rd., Charles Town, 07000239

**Ritchie County**

Pennsboro B&O Depot, Corner of Broadway St. and Collins Ave., Pennsboro, 07000242

**Roane County**

Chrystal Water and Power Company—Spencer Water and Ice Company, Church St., Spencer, 07000238

**WISCONSIN**

**Clark County**

Dickinson, Decatur and Kate, House, 411 State St., Neillsville, 07000223

**Fond Du Lac County**

Baptist Church, 133 East Fond Du Lac St., Ripon, 07000237

**Jackson County**

Black Hawk Powwow Grounds, W8426 WI 54E, Komensky, 07000244

A request for *removal* has been made for the following resource:

**IOWA**

**Pottawattamie County**

Ogden House, 169 W. Broadway, Council Bluffs, 76000803

[FR Doc. E7–3726 Filed 3–2–07; 8:45 am]

**BILLING CODE 4312–51–P**

## DEPARTMENT OF THE INTERIOR

## Bureau of Reclamation

## Information Collection Activities; Proposed Information Collection; Comment Request

**AGENCY:** Bureau of Reclamation, Interior.

**ACTION:** Notice and request for comments.

**SUMMARY:** In accordance with the Paperwork Reduction Act of 1995 (44 U.S.C. 3501 *et seq.*), this notice announces that the Bureau of Reclamation (we, our, or us) intends to seek approval of the following proposed new information collection: Recreation Visitor Use Surveys. We will use several distinct forms to collect different types of recreation information. Before submitting the information collection request to the Office of Management and Budget (OMB) for approval, we are soliciting comments on specific aspects of the information collection.

**DATES:** Comments on this notice must be received by May 4, 2007.

**ADDRESSES:** Address all comments concerning this notice to Bureau of Reclamation, Office of Program and Policy Services, Attention: Darrell Welch (84–53000), PO Box 25007, Denver CO 80225–0007 or via e-mail at *dwelch@do.usbr.gov.*

**FOR FURTHER INFORMATION CONTACT:** For further information or a copy of the proposed collection of information forms, contact Darrell Welch at 303–445–2711.

**SUPPLEMENTARY INFORMATION:** We are requesting approval for the collection of data from recreational users of our lands, rivers, and reservoirs. To meet our needs for the collection of visitor use data, we will be requesting OMB to authorize a two-part request. The first part of the request provides us with a set of 11 pre-approved questionnaires to be administered as approved by OMB.

The second part of the request consists of OMB and the Bureau of Reclamation agreeing upon a process whereby we custom design a survey instrument to fit a specific situation or area. The custom designed survey would be created by extracting questions from the approved questionnaires as applicable to the area and issue being evaluated. Only questions included in the pre-approved questionnaires will be used. We will then submit the new survey form to OMB for expedited approval.

*Title:* Recreation Visitor Use Surveys.

*Abstract:* The Bureau of Reclamation is responsible for recreation development at all of its reservoirs. Presently there are 300 designated recreation areas on our lands within the 17 Western States hosting almost 90 million visitors annually. Visitation to our reservoirs is increasing at an average rate of 1.2 million visitors per year, and more than 100 million people are projected to visit our reservoirs by the early twenty-first century. We must be able to respond to emerging trends, changes in the demographic profile of users, changing values, needs, wants, and desires, and conflicts between user groups. Statistically valid and up-to-date data derived from the user is essential to developing and providing recreation programs relevant to today's visitor.

*Respondents:* Respondents to the surveys will be members of the public engaged in recreational activities on our lands. Several surveys target people engaged in specific activities such as boating on a specific lake, or people camping at a developed campground. Visitors will primarily consist of local residents, people from large metropolitan areas in the vicinity of the lake/reservoir, and visitors from out of state.

*Frequency:* Varies by survey.

*Estimated Total Number of Respondents:* 7,350.

*Estimated Number of Responses per Respondent:* 1.0.

*Estimated Total of Annual Responses:* 7,350.

*Estimated Total Annual Burden Hours on Respondents:* 2,013.

ESTIMATE OF BURDEN FOR EACH FORM

| Survey instrument | Burden estimate per survey (in minutes) | Number of surveys (times/yr.) | Number of respondents per survey | Total estimated number of respondents | Total annual hour burden |
|---|---|---|---|---|---|
| Marina Survey | 10 | 2 | 278 | 556 | 93 |
| Campground Survey | 25 | 2 | 278 | 556 | 232 |
| River Instream Flow Survey | 20 | 2 | 278 | 556 | 185 |
| Reservoir Preferred Water Level Survey | 15 | 2 | 278 | 556 | 139 |
| Lake/River Visit Expenditure Survey | 15 | 2 | 278 | 556 | 139 |
| Recreation Activities Survey | 15 | 2 | 278 | 556 | 139 |
| Recreation Management Survey | 15 | 2 | 278 | 556 | 139 |
| Recreation Fee Survey | 10 | 1 | 400 | 400 | 67 |
| Recreation Development Survey | 15 | 2 | 278 | 556 | 139 |
| Water Level Impacts on Recreation Boating Use | 10 | 2 | 278 | 556 | 93 |
| River Recreation Quality Survey | 20 | 2 | 278 | 556 | 185 |
| Customized Surveys | 20 | 5 | 278 | 556 | 463 |

ESTIMATE OF BURDEN FOR EACH FORM—Continued

| Survey instrument | Burden estimate per survey (in minutes) | Number of surveys (times/yr.) | Number of respondents per survey | Total estimated number of respondents | Total annual hour burden |
|---|---|---|---|---|---|
| Totals | | | | 7,350 | 2,013 |

**Comments**

*Comments are invited on:* (a) Whether the proposed collection of information is necessary for the proper performance of our functions, including whether the information will have practical use;

(b) The accuracy of our estimated time and cost burdens of the proposed new collection of information, including the validity of the methodology and assumptions used;

(c) Ways to enhance the quality, use, and clarity of the information to be collected; and

(d) Ways to minimize the burden of the collection of information on respondents, including increased use of automated collection techniques or other forms of information technology.

We will summarize all comments received regarding this notice. We will publish that summary in the **Federal Register** when the information collection is submitted to OMB for review and approval.

Before including your address, phone number, e-mail address, or other personal identifying information in your comment, you should be aware that your entire comment—including your personal identifying information—may be made publicly available at any time. While you can ask us in your comment to withhold your personal identifying information from public review, we cannot guarantee that we will be able to do so.

Dated: January 26, 2007.

**Roseann Gonzales,**

*Director, Office of Program and Policy Services.*

[FR Doc. E7–3765 Filed 3–2–07; 8:45 am]

**BILLING CODE 4310–MN–P**

## DEPARTMENT OF JUSTICE

### Office on Violence Against Women

**[OMB Number 1122–0003]**

### Agency Information Collection Activities: Extension of a Currently Approved Collection; Comments Requested

**ACTION:** 30-Day Notice of Information Collection Under Review: Annual Progress Report for the STOP Formula Grants Program

The Department of Justice, Office on Violence Against Women (OVW) will be submitting the following information collection request to the Office of Management and Budget (OMB) for review and approval in accordance with the Paperwork Reduction Act of 1995. The proposed information collection is published to obtain comments from the public and affected agencies. This proposed information collection was previously published in the **Federal Register** Volume 71, Number 247, page 77412–77413, on December 26, 2007, allowing for a 60-day comment period.

The purpose of this notice is to allow for an additional 30 days for public comment until April 4, 2007. This process is conducted in accordance with 5 CFR 1320.10.

Written comments and/or suggestions regarding the items contained in this notice, especially the estimated public burden and associated response time, should be directed to The Office of Management and Budget, Office of Information and Regulatory Affairs, Attention Department of Justice Desk Officer, Washington, DC 20503. Additionally, comments may be submitted to OMB via facsimile to (202) 395–5806.

Written comments and suggestions from the public and affected agencies concerning the proposed collection of information are encouraged. Your comments should address one or more of the following four points:

(1) Evaluate whether the proposed collection of information is necessary for the proper performance of the functions of the agency, including whether the information will have practical utility;

(2) Evaluate the accuracy of the agency's estimate of the burden of the proposed collection of information, including the validity of the methodology and assumptions used;

(3) Enhance the quality, utility, and clarity of the information to be collected; and

(4) Minimize the burden of the collection of information on those who are to respond, including through the use of appropriate automated, electronic, mechanical, or other technological collection techniques or other forms of information technology, e.g., permitting electronic submission of responses.

**Overview of This Information Collection**

(1) *Type of Information Collection:* Extension of a currently approved collection.

(2) *Title of the Form/Collection:* Annual Progress Report for the STOP Violence Against Women Formula Grants Program.

(3) *Agency form number, if any, and the applicable component of the Department of Justice sponsoring the collection:* Form Number: 1122–0003. U.S. Department of Justice, Office on Violence Against Women.

(4) *Affected public who will be asked or required to respond, as well as a brief abstract:* The affected public includes the 56 STOP state administrators (from 50 states, the District of Columbia and five territories and commonwealths (Guam, Puerto Rico, American Samoa, Virgin Islands, Northern Mariana Islands)) and their subgrantees. The STOP Violence Against Women Formula Grant Program was authorized through the Violence Against Women Act of 1994 (VAWA) and reauthorized and amended by the Violence Against Women Act of 2000 (VAWA 2000) and by the Violence Against Women Act of 2005 (VAWA 2005). Its purpose is to promote a coordinated, multi-disciplinary approach to improving the criminal justice system's response to violence against women. The STOP Formula Grant Program envisions a partnership among law enforcement, prosecution, courts, and victim advocacy organizations to enhance victim safety and hold offenders accountable for their crimes of violence against women. The Department of Justice's Office on Violence Against Women administers the STOP Formula Grant Program. The grant funds must be distributed by STOP state administrators to subgrantees according to a statutory formula (as amended by VAWA 2000 and by VAWA 2005).

(5) *An estimate of the total number of respondents and the amount of time estimated for an average respondent to respond/reply:* It is estimated that it will

take the 56 respondents (STOP administrators) approximately one hour to complete an annual progress report. It is estimated that it will take approximately one hour for roughly 2500 subgrantees [1] to complete the relevant portion of the annual progress report. The Annual Progress Report for the STOP Formula Grant Program is divided into sections that pertain to the different types of activities that subgrantees may engage in and the different types of subgrantees that receive funds, i.e. law enforcement agencies, prosecutors' offices, courts, victim services agencies, etc.

(6) *An estimate of the total public burden (in hours) associated with the collection:* The total annual hour burden to complete the annual progress report is 2556 hours.

If additional information is required contact: Lynn Bryant, Deputy Clearance Officer, United States Department of Justice, Justice Management Division, Policy and Planning Staff, Suite 1600, Patrick Henry Building, 601 D Street NW., Washington, DC 20530.

Dated: February 27, 2007.

**Lynn Bryant,**

*Department Clearance Officer, United States Department of Justice.*

[FR Doc. E7–3723 Filed 3–2–07; 8:45 am]

**BILLING CODE 4410–FX–P**

[1] Each year the number of STOP subgrantees changes. The number 2,500 is based on the number of reports that OVW has received in the past from STOP subgrantees.

## DEPARTMENT OF JUSTICE

**[AAG/A Order No. 005–2007]**

## Privacy Act of 1974; System of Records

**AGENCY:** United States Marshals Service, DOJ.

**ACTION:** Modified System of Records.

**SUMMARY:** Pursuant to the provisions of the Privacy Act of 1974, 5 U.S.C. 552a, notice is given that the Department of Justices (DOJ) proposes to modify a United States Marshals Service (USMS) system of records entitled ''Warrant Information Network (WIN), USM–007.''

Changes have been made to the ''Categories of Individuals Covered by the System'' to include individuals suspected in a state's case that has been adopted by a USMS-sponsored task force; individuals for whom the USMS is conducting a criminal investigation or aiding in a criminal investigation by another law enforcement agency; missing persons, including children, for whom the USMS is conducting an investigation or aiding in a criminal investigation by another law enforcement agency; individuals, and their associates, who are the subject of, and who may provide information, assistance or leads in USMS fugitive, criminal, or missing persons investigations. Other changes are made consistent with the new categories of individuals covered, necessary updates are made, and routine uses have been revised to conform with DOJ model routine use language.

**DATES:** In accordance with the requirements of 5 U.S.C. 552a (e)(4) and (11), the public is given a 30 day period in which to comment. The Office of Management and Budget (OMB), which has oversight responsibility under the Act, has 40 days in which to conclude its review of the system. Therefore, please submit any comments by April 16, 2007

**ADDRESSES:** The public, OMB and the Congress are invited to submit any comments to Mary E. Cahill, Management and Planning Staff, Justice Management Division, Department of Justice, Washington, DC 20530 (Room 1400 National Place Building), Facsimile Number 202–307–1853.

**FOR FURTHER INFORMATION CONTACT:** Ed Bordley on 202–307–8571.

**SUPPLEMENTARY INFORMATION:** The notice for USM–007 was last published on November 8, 1999 at 64 FR 60832, 39.

In accordance with 5 U.S.C. 552a (r), the Department has provided a report to OMB and appropriate members of Congress.

Dated: February 22, 2007.

**Lee J. Lofthus,**

*Assistant Attorney General for Administration.*

### JUSTICE/USM–007

**SYSTEM NAME:**

Warrant Information Network (WIN).

**SECURITY CLASSIFICATION:**

Limited Official Use.

**SYSTEM LOCATION:**

*Primary System:* Investigative Services Division, U.S. Marshals Service (USMS), CS–4, Washington, DC 20530–1000.

*Decentralized Segments:* Each district office of the USMS maintains their own files. The addresses of USMS district offices are available on the Internet at *http://www.usdoj.gov/marshals/usmsofc.html.*

**CATEGORIES OF INDIVIDUALS COVERED BY THE SYSTEM:**

Individuals for whom federal warrants have been issued; individuals for whom State or local warrants have been issued when the warrant is part of a USMS sponsored multi-agency task force; individuals suspected in a state's case that has been adopted by a USMS-sponsored task force; individuals for whom the USMS is conducting a criminal investigation or aiding in a criminal investigation by another law enforcement agency; missing persons, including children, for whom the USMS is conducting an investigation or aiding in a criminal investigation by another law enforcement agency; individuals, and their associates, who are the subject of, and who may provide information, assistance or leads in USMS fugitive, criminal, or missing persons investigations.

**CATEGORIES OF RECORDS IN THE SYSTEM:**

Computerized records in this system consist of information pertaining to a warrant such as dates, issuing federal district, nature of the offense, investigative notes, information related to subjects, including biographical data, physical description, and criminal history, and a subject's association with other individuals, dangerous gangs, extremist groups, or other organizations; information concerning criminal and/or missing persons investigations, such as the evidence collected in support of criminal and/or missing persons investigations, the nature of the crime, investigative reports, investigative notes, biographical data relating to the investigation's subject and the subject's associates. Information on associates includes physical description, photographs, numerical identifiers, addresses, driver's license information and investigative information furnished by other federal, state or local law enforcement or other government agencies and non-government sources. In addition to the abbreviated data described above, the complete file contains the warrant and other court records and internal correspondence relating to the warrant; photographs; wanted flyers/posters; and investigative reports reflecting patterns of activity, leads, witnesses' and other persons' statements. Investigative reports and criminal record information from other federal, state, local, and foreign law enforcement agencies participating in or cooperating with USMS fugitive, criminal, or missing person investigations and apprehension efforts are also included in this system.

**AUTHORITY FOR MAINTENANCE OF THE SYSTEM:**

28 U.S.C. 509, 510, and 561 *et seq.*; 28 CFR 0.111(a) and (q).

**PURPOSE(S):**

The USMS is responsible for ensuring the judicial system's effective operation through the execution of federal arrest warrants, parole violator warrants, federal custodial and extradition warrants, and by investigating fugitive, criminal, and missing person matters. The WIN system facilitates the efficient management and administration of warrant executions and USMS fugitive, criminal and missing person investigations through the collection, flow, analysis, dissemination and maintenance of records and information necessary to accomplish these missions.

**ROUTINE USES OF RECORDS MAINTAINED IN THE SYSTEM, INCLUDING CATEGORIES OF USERS AND THE PURPOSES OF SUCH USES:**

**RECORDS OR INFORMATION MAY BE DISCLOSED:**

(a) To public and private organizations, individuals, and federal, state, territorial, local and foreign agencies to the extent necessary to obtain information or cooperation in USMS investigations and apprehension efforts;

(b) To any criminal, civil, or regulatory law enforcement authority (whether federal, state, territorial, local, tribal, or foreign) where the information is relevant to the recipient entity's law enforcement responsibilities;

(c) To contractors, grantees, experts, consultants, students, and others performing or working on a contract, service, grant, cooperative agreement, or other assignment for the Federal Government, when necessary to accomplish an agency function related to this system of records;

(d) In an appropriate proceeding before a court, or administrative or adjudicative body, when the Department of Justice determines that the records are arguably relevant to the proceeding; or in an appropriate proceeding before an administrative or adjudicative body when the adjudicator determines the records to be relevant to the proceeding;

(e) To the news media and the public, including disclosures pursuant to 28 CFR 50.2, unless it is determined that release of the specific information in the context of a particular case would constitute an unwarranted invasion of personal privacy;

(f) To a Member of Congress or staff acting upon the Member's behalf when the Member or staff requests the information on behalf of, and at the request of, the individual who is the subject of the record;

(g) To the National Archives and Records Administration for purposes of records management inspections conducted under the authority of 44 U.S.C. 2904 and 2906;

(h) To an actual or potential party to litigation or the party's authorized representative for the purpose of negotiation or discussion of such matters as settlement, plea bargaining, or in informal discovery proceedings;

(i) To federal, state, territorial, local, tribal, foreign, or international licensing agencies or associations which require information concerning the suitability or eligibility of an individual for a license or permit;

(j) A record may be disclosed to designated officers and employees of state, territorial, local (including the District of Columbia), or tribal law enforcement or detention agencies in connection with the hiring or continued employment of an employee or contractor, where the employee or contractor would occupy or occupies a position of public trust as a law enforcement officer or detention officer having direct contact with the public or with prisoners or detainees, to the extent that the information is relevant and necessary to the recipient agency's decision;

(k) To a former employee of the Department for purposes of: Responding to an official inquiry by a federal, state, or local government entity or professional licensing authority, in accordance with applicable Department regulations; or facilitating communications with a former employee that may be necessary for personnel-related or other official purposes where the Department requires information and/or consultation assistance from the former employee regarding a matter within that person's former area of responsibility.

(l) To appropriate agencies, entities, and persons when (1) the Department suspects or has confirmed that the security or confidentiality of information in the system of records has been compromised; (2) the Department has determined that as a result of the suspected or confirmed compromise there is a risk of harm to economic or property interests, identity theft or fraud, or harm to the security or integrity of this system or other systems or programs (whether maintained by the Department or another agency or entity) that rely upon the compromised information; and (3) the disclosure made to such agencies, entities, and persons is reasonably necessary to assist in connection with the Department's efforts to respond to the suspected or confirmed compromise and prevent, minimize, or remedy such harm.

*Disclosure to Consumer Reporting Agencies:* Not Applicable.

**POLICIES AND PRACTICES FOR STORING, RETRIEVING, ACCESSING, RETAINING, AND DISPOSING OF RECORDS IN THE SYSTEM:**

**STORAGE:**

Records are stored in standard file folders. Duplicate copies of paper records are stored on magnetic discs.

**RETRIEVABILITY:**

Records are retrieved by individual names or identifying numbers.

**SAFEGUARDS:**

Except as otherwise noted in paragraph (b) under ''Routine uses,'' access is restricted to personnel in the Investigative Services Division and in each USMS district office. Access to computerized records is safeguarded by user identification and password restrictions. Paper records are maintained in filing cabinets within supervised areas of the U.S. Marshals' offices. District and headquarters offices are locked during working and non-duty hours and entry is restricted to employees with official identification.

**RETENTION AND DISPOSAL:**

Records are kept in an operating file until warrant is executed and then transferred to a closed file. Closed files are retained for one year after file is closed, then transferred to the Federal Records Center and destroyed after 55 years. Computerized records are retained indefinitely as an operating file or as a closed case file.

**SYSTEM MANAGER(S) AND ADDRESS:**

Assistant Director, Investigative Services Division, U.S. Marshals Service, CS–4, Washington, DC 20530–1000.

**NOTIFICATION PROCEDURE:**

Same as ''Record access procedures.''

**RECORD ACCESS PROCEDURES:**

Make all requests for access in writing and clearly mark the letter and envelope ''Freedom of Information/Privacy Act Request.'' Clearly indicate the name of the requester, nature of the record sought, approximate date of the record, and provide the required verification of identity (28 CFR 16.41(d)). Direct all requests to the system manager identified above, Attention: FOI/PA Officer, and provide a return address for transmitting the information.

**CONTESTING RECORD PROCEDURES:**

Direct all requests to contest or amend information to the system manager identified above. State clearly and concisely the information being contested, the reason for contesting it, and the proposed amendment to the information sought. Clearly mark the

envelope ''Freedom of Information/ Privacy Act Request.''

**RECORD SOURCE CATEGORIES:**

Information is obtained from the courts, federal, state, local and foreign law enforcement agencies, public and private organizations, commercial information resellers, witnesses, informants, and other persons interviewed during the course of the fugitive, criminal, or missing person investigations.

**EXEMPTIONS CLAIMED FOR THE SYSTEM:**

The Attorney General has exempted this system from subsections (c)(3) and (4), (d), (e)(1), (2) and (3), (e)(4)(G) and (H), (e)(5), (e)(8), (f) and (g) of the Privacy Act pursuant to 5 U.S.C. 552a(j)(2). Rules have been promulgated in accordance with the requirements of 5 U.S.C. 553(b), (c), and (e) and have been published in the **Federal Register**. See 28 CFR 16.101.

[FR Doc. E7–3757 Filed 3–2–07; 8:45 am]

**BILLING CODE 4410–04–P**

## DEPARTMENT OF JUSTICE

### Office of Justice Programs

**[OJP (OJP) Docket No. 1467]**

### Meeting of the Department of Justice's Global Justice Information Sharing Initiative Federal Advisory Committee

**AGENCY:** Office of Justice Programs, Justice.

**ACTION:** Notice of meeting.

**SUMMARY:** This is an announcement for a meeting of the Department of Justice's Global Justice Information Sharing Initiative (Global) Federal Advisory Committee (GAC) to discuss the Global Initiative, as described at *http://www.it.ojp.gov/global.*

**DATES:** The meeting will take place on Wednesday, April 18, 2007, from 8:30 a.m. to 4 p.m. ET.

**ADDRESSES:** The meeting will take place at the Sheraton Crystal City Hotel, 1800 Jefferson Davis Highway, Arlington, Virginia 22202; Phone: (703) 486–1111.

**FOR FURTHER INFORMATION CONTACT:** J. Patrick McCreary, Global Designated Federal Employee (DFE), Bureau of Justice Assistance, Office of Justice Programs, 810 7th Street, Washington, DC 20531; Phone: (202) 616–0532 [note: this is not a toll-free number]; E-mail: *James.P.McCreary@usdoj.gov.*

**SUPPLEMENTARY INFORMATION:**

#### Purpose

The GAC acts as the focal point for justice information systems integration activities in order to facilitate the coordination of technical, funding, and legislative strategies in support of the Administration's justice priorities.

In addition, the GAC guides and monitors the development of the Global information sharing concept. It advises the Attorney General, the President (through the Attorney General), the Assistant Attorney General, Office of Justice Programs, and local, state, tribal, and federal policymakers in the executive, legislative, and judicial branches. The GAC also advocates for strategies for accomplishing a Global information sharing capability.

#### Meeting Registration and Accommodation

This meeting is open to the public. Due to security measures, however, members of the public who wish to attend this meeting must register with Mr. J. Patrick McCreary at the above address at least (7) days in advance of the meeting. Registrations will be accepted on a space available basis. No persons will be allowed access to the meeting without registering. All attendees will be required to sign in at the meeting registration desk. Please bring photo identification and allow extra time prior to the meeting.

Interested persons whose registrations have been accepted may be permitted to participate in the discussions at the discretion of the meeting chairman and with approval of the DFE.

Anyone requiring special accommodations should notify Mr. McCreary at least seven (7) days in advance of the meeting.

**J. Patrick McCreary,**

*Global DFE, Bureau of Justice Assistance, Office of Justice Programs.*

[FR Doc. 07–983 Filed 3–2–07; 8:45 am]

**BILLING CODE 4410–18–P**

## DEPARTMENT OF LABOR

### Office of Disability Employment Policy

**[OMB Number 1230–0NEW]**

### Notice of Proposed Data Collection

**SUMMARY:** The U.S. Department of Labor, as part of its continuing effort to reduce paperwork and respondent burden, conducts a pre-clearance consultation process to provide the general public and Federal agencies with an opportunity to comment on proposed and/or continuing collections of information in accordance with the Paperwork Reduction Act of 1995 (PRA95) [44 U.S.C. 3506(c)(2)(A)]. This process helps ensure that requested data can be provided in the desired format, reporting burdens are minimized, collection instruments are clearly understood, and the impact of collection requirements on respondents can be properly assessed. Currently the Office of Disability Employment Policy (ODEP) is soliciting comments concerning a proposed data collection for the following Employer Assistance Referral Network (EARN) survey: Survey of Employer Perspectives on the Employment of People with Disabilities. A copy of the proposed information collection request (ICR) can be obtained by contacting the office listed below in the address section of this notice.

**DATES:** Written comments must be submitted to the office shown in the address section below on or before May 4, 2007.

**ADDRESSES:** Richard Horne, U.S. Department of Labor, Office of Disability Employment Policy, 200 Constitution Avenue, NW., Suite S–1303, Washington, DC 20210. Telephone: (202) 693–7880. This is not a toll-free number.

**FOR FURTHER INFORMATION CONTACT:** Richard Horne, telephone: (202) 693–7880, e-mail: *horne.richard@dol.gov.*

**SUPPLEMENTARY INFORMATION:**

#### I. Background

The Employer Assistance Referral Network (EARN) is a nationwide service designed to provide employers with a technical, educational, and informational resource to simplify and encourage the hiring of qualified workers. Historically, disability programs required employers to do much of the work in the finding and hiring of people with disabilities. The Office of Disability Employment Policy (ODEP) of the Department of Labor has designed EARN to alleviate these barriers and do much of the work for the employer.

EARN is a service from the Office of Disability Employment Policy (ODEP) of the Department of Labor. This referral service links employers with providers who refer appropriate candidates with disabilities. The service is provided by means of a nationwide toll-free Call Center.

EARN is a service of the Office of Disability Employment Policy which was established pursuant to section 1(a)(1) of the Consolidated Appropriations Act, 2001 (Pub. L. 106–554) H.R. 5656, see Title I, ''Departmental Management'') 29 U.S.C. 551 *et seq.*; 5 U.S.C. 301.

This service, and the data collection component is authorized pursuant to Pub. L. 106–554 which direct the Office

of Disability Policy to provide initiatives such as EARN to ''further the objective of eliminating employment barriers to the training and employment of people with disabilities''.

**II. Desired Focus of Comments**

The Department is particularly interested in comments which:

- Evaluate whether the collection of information is necessary for the proper performance of the functions of the agency, including whether the information will have practical utility;
- Evaluate the accuracy of the agency's estimate of the burden of the collection of information, including the validity of the methodology and assumptions used;
- Enhance the quality, utility, and clarity of the information to be collected; and
- Minimize the burden of the collection of information on those who are to respond, including through the use of appropriate automated, electronic, mechanical, or other technological collection techniques or other forms of information technology, *e.g.*, permitting electronic submissions of responses.

**III. Current Action**

This proposed collection ICR covers: The Survey of Employer Perspectives on the Employment of People With Disabilities. The survey will build on the findings of previous employer surveys, with an emphasis on current attitudes and practices of employers in 12 industry sectors, including some high growth industries as projected by the Bureau of Labor Statistics (BLS). ODEP is also interested in understanding employers' perspectives about disability employment by company size and the particular type of the employer (e.g. Executive, Human Resources, Equal Employment Opportunity, front line supervisor or manager). The survey will be conducted by telephone by a survey firm utilizing computer assisted telephone interviewing (CATI) capability. The survey will also solicit free-text comments from employers regarding the employment of people with disabilities.

*Agency:* Office of Disability Employment Policy.

*Titles:* Survey of Employer Perspectives in the Employment of People With Disabilities.

*OMB Number:* [1230–0NEW].

*Frequency:* On occasion.

*Type of Response:* Reporting.

*Affected Public:* Businesses or other for-profit; Not-for-profit institutions; Farms; Federal Government; and State, Local, or Tribal Government.

*Number of Respondents:* 3,600.

| Survey | Estimated number of annual responses | Average response time (hours) | Estimated burden hours |
|---|---|---|---|
| Survey of Employer Perspectives on the Employment of People With Disabilities | 3,600 | .25 | 900 |
| Total | 3,600 | | |

*Total Burden Cost (capital/startup):* $54,270.

*Total Burden Cost (operating/maintaining):* $575,254.

*Description:* The survey is designed to collect data on employers' perspectives on the employment of people with disabilities. ODEP plans to use the data to formulate targeted strategies and policies for increasing the employment of persons with disabilities. Various industry sectors provide opportunities to increase the employment of persons with disabilities. ODEP would like to be able to make comparisons among the industry sectors, including high growth industries. This survey entails conducting a 20-minute telephone survey of a representative sample of senior executives representing 12 industries by company size [small (5–249 employees), medium (250–499 employees), and large companies (500 or more employees)]. Westat will conduct interviews with 3,600 respondents. The survey will utilize a stratified random sample design. Larger companies will be over sampled, but all companies will be selected with equal probability within each stratum. The domains of the population of interest for the survey are based on company size classes within the major industry sectors. The size classes are small, medium, and large. The size classes will be based on the number of employees of the company. A uniform set of size class boundaries can be used for all industry sectors, e.g., small (5–249 employees), medium (250–499 employees), and large companies (500 or more employees). However, size distribution of the companies may vary considerably across the major industry sectors. Consequently, optimal size strata boundaries can differ across the industries substantially. There are a total of 36 (three size classes within 12 sectors) domains of interest.

The research team will describe the concerns employers have about the employment of persons with disabilities, and how ODEP's policies can help employers address those concerns. The survey will also provide information on steps employers have taken to recruit and hire persons with disabilities, as well as retain and promote those employees. The survey will inform disability employment policy and practice by comparing perspectives of senior executives in firms of varying size and industry sectors, including some of the fastest growing industries in the United States. In addition, the results will also inform the development of ODEP's programs and policies.

**John R. Davey,**

*Director.*

[FR Doc. E7–3648 Filed 3–2–07; 8:45 am]

BILLING CODE 4510–CX–P

## DEPARTMENT OF LABOR

### Employment and Training Administration

### Request for Certification of Compliance—Rural Industrialization Loan and Grant Program

**AGENCY:** Employment and Training Administration, Labor.

**ACTION:** Notice.

**SUMMARY:** The Employment and Training Administration is issuing this notice to announce the receipt of a ''Certification of Non-Relocation and Market and Capacity Information Report'' (Form 4279–2) for the following:

*Applicant/Location:* Mid America Brick and Structural Clay Products Company/Mexico, Missouri.

*Principal Product:* The loan, guarantee, or grant application is for a new business venture to purchase and install brick manufacturing equipment,

and to rehabilitate and relocate purchased equipment on-site. The NAICS industry codes for this enterprise are: 327121 Brick and Structural Clay Tile Manufacturing; and, 327123 Other Structural Clay Product Manufacturing.

**DATES:** All interested parties may submit comments in writing no later than March 19, 2007. Copies of adverse comments received will be forwarded to the applicant noted above.

**ADDRESSES:** Address all comments concerning this notice to Anthony D. Dais, U.S. Department of Labor, Employment and Training Administration, 200 Constitution Avenue, NW., Room S–4231, Washington, DC 20210; or e-mail *Dais.Anthony@dol.gov*; or transmit via fax (202) 693–3015 (this is not a toll-free number).

**FOR FURTHER INFORMATION CONTACT:** Anthony D. Dais, at telephone number (202) 693–2784 (this is not a toll-free number).

**SUPPLEMENTARY INFORMATION:** Section 188 of the Consolidated Farm and Rural Development Act of 1972, as established under 29 CFR part 75, authorizes the United States Department of Agriculture (USDA) to make or guarantee loans or grants to finance industrial and business activities in rural areas. The Secretary of Labor must review the application for financial assistance for the purpose of certifying to the Secretary of Agriculture that the assistance is not calculated, or likely, to result in: (a) A transfer of any employment or business activity from one area to another by the loan applicant's business operation; or, (b) An increase in the production of goods, materials, services, or facilities in an area where there is not sufficient demand to employ the efficient capacity of existing competitive enterprises unless the financial assistance will not have an adverse impact on existing competitive enterprises in the area. The Employment and Training Administration (ETA) within the Department of Labor is responsible for the review and certification process. Comments should address the two bases for certification and, if possible, provide data to assist in the analysis of these issues.

Signed at Washington, DC this 28th day of February, 2007.

**Gay M. Gilbert,**

*Administrator, Office of Workforce Investment, Employment and Training Administration.*

[FR Doc. E7–3761 Filed 3–2–07; 8:45 am]

BILLING CODE 4510–FN–P

## NUCLEAR REGULATORY COMMISSION

### Notice of Public Meeting for Fuel Cycle Facilities

**AGENCY:** Nuclear Regulatory Commission.

**ACTION:** Meeting notice and request for speakers.

**FOR FURTHER INFORMATION CONTACT:** James Smith, Project Manager, Technical Support Section, Division of Fuel Cycle Safety and Safeguards, Office of Nuclear Material Safety and Safeguards, U.S. Nuclear Regulatory Commission, Washington, DC 20005–0001. Telephone: (301) 415–6459; fax number: (301) 415–5370; e-mail: *jas4@nrc.gov*.

**SUPPLEMENTARY INFORMATION:**

### I. Introduction

The Nuclear Regulatory Commission (NRC) is hosting a seminar, The Fuel Cycle Information Exchange 2007 (FCIX 2007), on June 12 and 13, 2007. This will be the second annual hosting of this seminar to provide an opportunity for licensees, NRC staff, and other stakeholders to exchange information and discuss issues of interest pertaining to the regulation of NRC-regulated fuel cycle facilities.

The seminar will be held in Rockville, Maryland, at the Universities of Maryland at the Shady Grove Campus Auditorium and will be open to the public. We are expecting that NRC staff, licensees and certificate holders, and other interested parties and stakeholders will be making presentations on varying subjects of interest, with opportunity for followup discussion on each subject.

### II. Requests for Speakers and Topics of Discussion

Speakers from the Nuclear Energy Institute and the NRC have volunteered to address various topics; however, at this early date, the NRC is seeking additional speakers to discuss topics of a broad nature, relative to the nuclear fuel cycle. If you would like an opportunity to discuss an issue, or to offer an additional topic of discussion, please contact the staff member listed below.

The nature of the topics will not be limited; however; we do ask that you not use this as a commercial venue to promote your company's products or services. Additionally, we ask that you provide the staff contact with a Microsoft Powerpoint version of your presentation at least 45 days prior to the seminar.

### III. Dates and Location

*Dates:* June 12, 2007, 9 a.m.–4:30 p.m.; June 13, 2007, 9 a.m.–12 p.m.: Universities of Maryland at the Shady Grove Campus Auditorium, 9630 Gudelsky Drive, Rockville, MD 20850.

### IV. Contact

James Smith, Project Manager, Office of Nuclear Material Safety and Safeguards, Division of Fuel Cycle Safety and Safeguards, Special Projects Branch, Mail Stop: T8F42, 301–415–6459, Fax: 301–415–5370, e-mail: *jas4@nrc.gov.*

### V. Further Information

The document related to this action is available electronically at the NRC's Electronic Reading Room at *http://www.nrc.gov/reading-rm/adams.html.* From this site, you can access the NRC's Agencywide Documents Access and Management System (ADAMS), which provides text and image files of NRC's public documents. The ADAMS ascension number for the document related to this notice is provided in the following table. If you do not have access to ADAMS or if there are problems in accessing the document located in ADAMS, contact the NRC Public Document Room (PDR) Reference staff at 1–800–397–4209, 301–415–4737, or by e-mail to *pdr@nrc.gov.*

Dated at Rockville, Maryland, this 16th day of February 2007.

For the Nuclear Regulatory Commission.

**Wilkins Smith,**

*Acting Chief, Technical Support Branch, Special Projects, and Technical Support Directorate, Division of Fuel Cycle Safety, and Safeguards, Office of Nuclear Materials Safety, and Safeguards.*

[FR Doc. E7–3826 Filed 3–2–07; 8:45 am]

BILLING CODE 7590–01–P

## NUCLEAR REGULATORY COMMISSION

### Advisory Committee on Reactor Safeguards

### Meeting of the ACRS Subcommittee on Reliability and Probabilistic Risk Assessment; Notice of Meeting

The ACRS Subcommittee on Reliability and Probabilistic Risk Assessment (PRA) will hold a meeting on March 22, 2007, Room T–2B1, 11545 Rockville Pike, Rockville, Maryland.

The entire meeting will be open to public attendance.

The agenda for the subject meeting shall be as follows:

*Thursday, March 22, 2007—8:30 a.m. until the conclusion of business.*

The Subcommittee will review the staff's plans for evaluating the agency's human reliability analysis models in an effort to propose either a single model for the agency to use or guidance on which model(s) should be used in specific circumstances. The Subcommittee will hear presentations by and hold discussions with representatives of the NRC staff and industry regarding this matter. The Subcommittee will gather information, analyze relevant issues and facts, and formulate proposed positions and actions, as appropriate, for deliberation by the full Committee.

Members of the public desiring to provide oral statements and/or written comments should notify the Designated Federal Official, Dr. Hossein P. Nourbakhsh, (Telephone: 301–415–5622) five days prior to the meeting, if possible, so that appropriate arrangements can be made. Electronic recordings will be permitted.

Further information regarding this meeting can be obtained by contacting the Designated Federal Official between 7:30 a.m. and 4:15 p.m. (ET). Persons planning to attend this meeting are urged to contact the above named individual at least two working days prior to the meeting to be advised of any potential changes to the agenda.

Dated: February 23, 2007.

**Cayetano Santos,**

*Acting Branch Chief, ACRS.*

[FR Doc. E7–3824 Filed 3–2–07; 8:45 am]

**BILLING CODE 7590–01–P**

## NUCLEAR REGULATORY COMMISSION

### Advisory Committee on Reactor Safeguards (ACRS); Meeting of the ACRS Subcommittee on Reliability and Probabilistic Risk Assessment; Notice of Meeting

The ACRS Subcommittee on Reliability and Probabilistic Risk Assessment (PRA) will hold a meeting on March 23, 2007, Room T–2B3, 11545 Rockville Pike, Rockville, Maryland.

The entire meeting will be open to public attendance.

The agenda for the subject meeting shall be as follows:

*Friday, March 23, 2007—8:30 a.m. until the conclusion of business*

The Subcommittee will review the Risk Management Technical Specification Initiative 4b and the Risk Informed Completion Times. The Subcommittee will hear presentations by and hold discussions with representatives of the NRC staff and industry regarding this matter. The Subcommittee will gather information, analyze relevant issues and facts, and formulate proposed positions and actions, as appropriate, for deliberation by the full Committee.

Members of the public desiring to provide oral statements and/or written comments should notify the Designated Federal Official, Ms. Maitri Banerjee (Telephone: 301–415–6973) five days prior to the meeting, if possible, so that appropriate arrangements can be made. Electronic recordings will be permitted.

Further information regarding this meeting can be obtained by contacting the Designated Federal Official between 7:30 a.m. and 4:15 p.m. (ET). Persons planning to attend this meeting are urged to contact the above named individual at least two working days prior to the meeting to be advised of any potential changes to the agenda.

Dated: February 26, 2007.

**Cayetano Santos,**

*Acting Branch Chief, ACRS.*

[FR Doc. E7–3825 Filed 3–2–07; 8:45 am]

**BILLING CODE 7590–01–P**

## NUCLEAR REGULATORY COMMISSION

### Sunshine Act Meeting Notice

**AGENCY HOLDING THE MEETINGS:** Nuclear Regulatory Commission.

**DATE:** Week of February 26, 2007.

**PLACE:** Commissioners' Conference Room, 11555 Rockville Pike, Rockville, Maryland.

**STATUS:** Public and Closed.

**ADDITIONAL MATTERS TO BE CONSIDERED:**

**Week of February 26, 2007—Tentative**

*Monday, February 26, 2007*

1:05 p.m. Affirmation Session (Public Meeting) (Tentative)

a. AmerGen Energy Company, LLC (License Renewal for Oyster Creek Nuclear Generating Station) Docket No. 50–0219, Remaining Legal challenges to LBP–06–07 (Tentative)

b. Nuclear Management Co., LLC (Palisades Nuclear Plant, license renewal application); response to ''Notice'' relating to San Louis Obispo Mothers for Peace (Tentative)

c. System Energy Resources, Inc. (Early Site Permit for Grand Gulf ESP Site); response to NEPA/terrorism issue (Tentative)

d. Pacific Gas & Electric Co. (Diablo Canyon ISFSI), Docket No. 72–26–ISFSI (Tentative)

* * * * *

*The schedule for Commission meetings is subject to change on short notice. To verify the status of meetings call (recording)—(301) 415–1292. Contact person for more information: Michelle Schroll, (301) 415–1662.

* * * * *

**ADDITIONAL INFORMATION:** By a vote of 5–0 on February 23, 2007, the Commission determined pursuant to U.S.C. 552b(e) and § 9.107(a) of the Commission's rules that ''Affirmation of a. AmerGen Energy Company, LLC (License Renewal for Oyster Creek Nuclear Generating Station) Docket No. 50–0219, Remaining Legal challenges to LBP–06–07 (Tentative); b. Nuclear Management Co., LLC (Palisades Nuclear Plant, license renewal application); response to ''Notice'' relating to San Louis Obispo Mothers for Peace (Tentative); c. System Energy Resources, Inc. (Early Site Permit for Grand Gulf ESP Site); response to NEPA/terrorism issue (Tentative); d. Pacific Gas & Electric Co. (Diablo Canyon ISFSI), Docket No. 72–26–ISFSI (Tentative)'' be held February 26, 2007, and on less than one week's notice to the public.

Affirmation of ''Exelon Generation Company, LLC (Early Site Permit for Clinton ESP)'' tentatively scheduled on February 26, 2007, has been postponed and will be rescheduled.

* * * * *

The NRC Commission Meeting Schedule can be found on the Internet at: *www.nrc.gov/what-we-do/policy-making/schedule.html.*

* * * * *

The NRC provides reasonable accommodation to individuals with disabilities where appropriate. If you need a reasonable accommodation to participate in these public meetings, or need this meeting notice or the transcript or other information from the public meetings in another format (*e.g.,* braille, large print), please notify the NRC's Disability Program Coordinator, Deborah Chan, at 301–415–7041, TDD: 301–415–2100, or by e-mail at *DLC@nrc.gov.* Determinations on requests for reasonable accommodation will be made on a case-by-case basis.

* * * * *

This notice is distributed by mail to several hundred subscribers; if you no longer wish to receive it, or would like to be added to the distribution, please contact the Office of the Secretary, Washington, DC 20555 (301–415–1969). In addition, distribution of this meeting notice over the Internet system is available. If you are interested in receiving this Commission meeting schedule electronically, please send an electronic message to *dkw@nrc.gov.*

Dated: February 23, 2007.

**Michelle Schroll,**

*Office of the Secretary,*

[FR Doc. 07–998 Filed 2–28–07; 5:10 pm]

BILLING CODE 7590–01–P

## NUCLEAR REGULATORY COMMISSION

### Sunshine Act Meeting Notice

**DATE:** Week of March 5, 2007.

**PLACE:** Commissioners' Conference Room, 11555 Rockville Pike, Rockville, Maryland.

**STATUS:** Public and Closed.

**ADDITIONAL MATTERS TO BE CONSIDERED:**

**Week of March 5, 2007**

*Thursday, March 8, 2007*

9:55 a.m. Affirmation Session (Public Meeting) (Tentative) a. Exelon Generation Company, LLC (Early Site Permit for Clinton ESP) (Tentative).

* * * * *

*The schedule for Commission meetings is subject to change on short notice. To verify the status of meetings call (recording)—(301) 415–1292. Contact person for more information: Michelle Schroll, (301) 415–1662.

* * * * *

The NRC Commission Meeting Schedule can be found on the Internet at: *http:// www.nrc.gov/about-nrc/policy-making/schedule.html.*

* * * * *

The NRC provides reasonable accommodation to individuals with disabilities where appropriate. If you need a reasonable accommodation to participate in these public meetings, or need this meeting notice or the transcript or other information from the public meetings in another format (e.g. braille, large print), please notify the NRC's Disability Program Coordinator, Deborah Chan, at 301–415–7041, TDD: 301–415–2100, or by e-mail at *DLC@nrc.gov.* Determinations on requests for reasonable accommodation will be made on a case-by-case basis.

* * * * *

This notice is distributed by mail to several hundred subscribers; if you no longer wish to receive it, or would like to be added to the distribution, please contact the Office of the Secretary, Washington, DC 20555 (301–415–1969). In addition, distribution of this meeting notice over the Internet system is available. If you are interested in receiving this Commission meeting schedule electronically, please send an electronic message to *dkw@nrc.gov.*

Dated: February 28, 2007.

**Michelle Schroll,**

*Office of the Secretary.*

[FR Doc. 07–1005 Filed 3–1–07; 12:56 pm]

BILLING CODE 7590–01–P

## OFFICE OF PERSONNEL MANAGEMENT

### Excepted Service

**AGENCY:** Office of Personnel Management (OPM).

**ACTION:** Notice.

**SUMMARY:** This gives notice of OPM decisions granting authority to make appointments under Schedules A, B, and C in the excepted service as required by 5 CFR 6.6 and 213.103.

**FOR FURTHER INFORMATION CONTACT:** C. Penn, Executive Resources Services Group, Center for Human Resources, Division for Human Capital Leadership and Merit System Accountability, 202–606–2246.

**SUPPLEMENTARY INFORMATION:** Appearing in the listing below are the individual authorities established under Schedules A, B, and C between January 1, 2007, and January 31, 2007. Future notices will be published on the fourth Tuesday of each month, or as soon as possible thereafter. A consolidated listing of all authorities as of June 30 is published each year.

**Schedule A**

No Schedule A appointments were approved for January 2007.

**Schedule B**

No Schedule B appointments were approved for January 2007.

*Section 213.3304 Department of State*

DSGS61209 Staff Assistant to the Ambassador-At-Large (War Crimes). Effective January 05, 2007.

DSGS61125 Protocol Officer (Visits) to the Chief of Protocol. Effective January 09, 2007.

DSGS60734 Public Affairs Specialist to the Assistant Secretary for Public Affairs. Effective January 12, 2007.

DSGS61109 Public Affairs Specialist to the Assistant Secretary for Western Hemispheric Affairs. Effective January 12, 2007.

DSGS61207 Special Assistant (Senior Advisor) to the Assistant Secretary for Democracy, Human Rights and Labor. Effective January 23, 2007.

*Section 213.3305 Department of the Treasury*

DYGS00407 Senior Advisor to the Assistant Secretary for Financial Markets. Effective January 05, 2007.

DYGS60401 Special Assistant for Advance to the Director of Strategic Planning, Scheduling and Advance. Effective January 26, 2007.

DYGS00482 Deputy Executive Secretary. Effective January 30, 2007.

*Section 213.3306 Department of Defense*

DDGS17003 Defense Fellow to the Special Assistant to the Secretary of Defense for White House Liaison. Effective January 04, 2007.

DDGS16992 Staff Assistant to the Special Assistant to the Secretary and Deputy Secretary of Defense. Effective January 09, 2007.

DDGS17000 Special Assistant to the Deputy Under Secretary of Defense (International Technology Security). Effective January 09, 2007.

DDGS17008 Special Events Coordinator to the Assistant Secretary of Defense Public Affairs. Effective January 29, 2007.

*Section 213.3307 Department of the Army*

DWGS60030 Confidential Assistant to the Deputy Under Secretary of the Army. Effective January 29, 2007.

*Section 213.3310 Department of Justice*

DJGS00067 Chief of Staff to the Assistant Attorney General for Justice Programs. Effective January 05, 2007.

DJGS00162 Counsel to the Assistant Attorney General. Effective January 05, 2007.

DJGS00228 Counsel to the Chief of Staff. Effective January 17, 2007.

DJGS00195 Counsel to the Assistant Attorney General to the Deputy Assistant Attorney General. Effective January 26, 2007.

DJGS00314 Counsel to the Assistant Attorney General. Effective January 29, 2007.

*Section 213.3311 Department of Homeland Security*

DMGS00604 Special Assistant to the Secretary for Stakeholder Affairs and Information Integration to the Chief of Staff. Effective January 05, 2007.

DMGS00614 Confidential Assistant to the Chief Medical Officer. Effective January 05, 2007.

DMGS00615 Chief of Staff to the Assistant Secretary for Policy. Effective January 05, 2007.

DMGS00609 Associate Director of White House Actions and Policy Coordinating Committee Coordinator to the Executive Secretary. Effective January 09, 2007.

DMGS00612 Component Liaison and Correspondence Analyst to the

Executive Secretary. Effective January 10, 2007.

DMGS00617 Director of Legislative Affairs for Policy to the Assistant Secretary for Legislative Intergovernmental Affairs. Effective January 10, 2007.

DMGS00619 Director of Legislative Affairs for Border Security and Immigration to the Assistant Secretary for Legislative Intergovernmental Affairs. Effective January 10, 2007.

DMGS00620 Principal Associate Director of White House Actions and Policy Coordinating Committee Coordinator to the Executive Secretary. Effective January 10, 2007.

DMGS00610 Public Affairs and Press Assistant to the Assistant Secretary for Public Affairs. Effective January 16, 2007.

DMGS00622 Associate Director of Communications and Speechwriter to the Director of Communications. Effective January 16, 2007.

DMGS00618 Special Assistant to the Under Secretary for Preparedness. Effective January 17, 2007.

DMGS00624 Component Liaison and Correspondence Analyst to the Executive Secretary. Effective January 23, 2007.

DMGS00626 Deputy Secretary Briefing Book Coordinator to the Executive Secretary. Effective January 24, 2007.

DMGS00613 Junior Writer and Researcher to the Director of Strategic Communications. Effective January 25, 2007.

DMGS00616 Senior Legislative Assistant to the Assistant Secretaries and Deputy Assistant Secretaries to the Assistant Secretary for Legislative Intergovernmental Affairs. Effective January 25, 2007.

DMGS00621 Special Assistant to the Chief Intelligence Officer to the Assistant Secretary for Information Analysis. Effective January 25, 2007.

DMGS00629 Confidential Assistant to the General Counsel to the Chief of Staff. Effective January 30, 2007.

*Section 213.3312 Department of the Interior*

DIGS01084 Special Assistant to the Director—Scheduling and Advance. Effective January 05, 2007.

DIGS01088 Confidential Assistant to the Solicitor. Effective January 12, 2007.

DIGS01089 Special Assistant to the Deputy Chief of Staff. Effective January 12, 2007.

DIGS01091 Special Assistant (Scheduling and Advance) to the Director—Scheduling and Advance. Effective January 12, 2007.

DIGS01090 Special Assistant (Scheduling and Advance) to the Director—Scheduling and Advance. Effective January 24, 2007.

DIGS01086 Special Assistant (Scheduling and Advance) to the Director—Scheduling and Advance. Effective January 25, 2007.

*Section 213.3313 Department of Agriculture*

DAGS00872 Confidential Assistant to the Director of Communications. Effective January 05, 2007.

DAGS00873 Staff Assistant to the Assistant Secretary for Administration. Effective January 05, 2007.

DAGS00874 Director of Speechwriting to the Director of Communications. Effective January 12, 2007.

DAGS00867 Associate Administrator to the Administrator. Effective January 23, 2007.

DAGS00875 Confidential Assistant to the Assistant Secretary for Congressional Relations. Effective January 31, 2007.

*Section 213.3314 Department of Commerce*

DCGS00385 Special Assistant to the Associate Under Secretary for Economic Affairs. Effective January 05, 2007.

DCGS00432 Confidential Assistant to the Director of Advance. Effective January 05, 2007.

DCGS00444 Senior Advisor to the Assistant Secretary for Economic Development. Effective January 05, 2007.

DCGS60290 Special Assistant to the Deputy Assistant Secretary for Domestic Operations. Effective January 05, 2007.

DCGS00074 Director of Public Affairs to the Deputy Assistant Secretary for External Affairs and Communication. Effective January 19, 2007.

DCGS00467 Confidential Assistant to the Deputy Assistant Secretary for Economic Development. Effective January 19, 2007.

DCGS00612 Director of Advisory Committees to the Assistant Secretary for Manufacturing and Services. Effective January 19, 2007.

DCGS60006 Confidential Assistant to the Director of Advance. Effective January 25, 2007.

DCGS60072 Director of Congressional Affairs to the Deputy Assistant Secretary for External Affairs and Communication. Effective January 25, 2007.

DCGS60395 Confidential Assistant to the Assistant Secretary and Director General of United States/for Commercial Services. Effective January 25, 2007.

DCGS60609 Confidential Assistant to the Chief of Staff. Effective January 25, 2007.

DCGS00298 Senior Advisor to the Assistant Secretary for Telecommunications and Information. Effective January 26, 2007.

DCGS00326 Confidential Assistant to the Assistant Secretary and Director General of the United States for Commercial Services. Effective January 31, 2007.

*Section 213.3315 Department of Labor*

DLGS60231 Staff Assistant to the Director of Operations. Effective January 05, 2007.

DLGS60081 Intergovernmental Assistant to the Assistant Secretary for Congressional and Intergovernmental Affairs. Effective January 09, 2007.

DLGS60119 Staff Assistant to the Chief of Staff. Effective January 09, 2007.

DLGS60239 Staff Assistant to the Director of Operations. Effective January 09, 2007.

DLGS60247 Legislative Assistant to the Assistant Secretary for Congressional and Intergovernmental Affairs. Effective January 09, 2007.

DLGS60132 Special Assistant to the Chief of Staff. Effective January 12, 2007.

DLGS60219 Staff Assistant to the Associate Deputy Secretary. Effective January 12, 2007.

DLGS60220 Special Assistant to the Assistant Secretary for Public Affairs. Effective January 16, 2007.

DLGS60146 Attorney Advisor to the Solicitor of Labor. Effective January 24, 2007.

*Section 213.3316 Department of Health and Human Services*

DHGS60345 Director of Public Affairs to the Assistant Secretary for Children and Families. Effective January 24, 2007.

DHGS60044 Special Assistant to the Assistant Secretary for Legislation. Effective January 25, 2007.

*Section 213.3317 Department of Education*

DBGS00587 Confidential Assistant to the Director, White House Liaison. Effective January 05, 2007.

DBGS00582 Confidential Assistant to the Assistant Secretary for Postsecondary Education. Effective January 09, 2007.

DBGS00584 Confidential Assistant to the Deputy Assistant Secretary for Media Relations and Strategic Communications. Effective January 09, 2007.

DBGS00585 Senior Advisor to the Deputy Secretary of Education. Effective January 10, 2007.
DBGS00580 Deputy Assistant Secretary for Performance Improvement to the Assistant Secretary for Management. Effective January 12, 2007.
DBGS00588 Special Assistant to the Assistant Secretary for Legislation and Congressional Affairs. Effective January 26, 2007.
DBGS00589 Confidential Assistant to the Director, Scheduling and Advance Staff. Effective January 26, 2007.
DBGS00590 Special Assistant to the Assistant Secretary, Office of Communications and Outreach. Effective January 30, 2007.
DBGS00595 Special Assistant to the Assistant Secretary, Office of Communications and Outreach. Effective January 30, 2007.
DBGS00596 Associate Assistant Deputy Secretary to the Assistant Deputy Secretary. Effective January 30, 2007.
DBGS00598 Confidential Assistant to the Assistant Secretary for Legislation and Congressional Affairs. Effective January 31, 2007.

*Section 213.3318 Environmental Protection Agency*

EPGS06033 Confidential Assistant to the Deputy Administrator. Effective January 11, 2007.
EPGS06036 Supervisory Public Affairs Specialist to the Associate Administrator for Public Affairs. Effective January 11, 2007.
EPGS06037 Senior Policy Advisor to the Deputy Administrator. Effective January 12, 2007.
EPGS05034 Program Advisor to the Associate Administrator for Congressional and Intergovernmental Relations. Effective January 24, 2007.

*Section 213.3303 Office of National Drug Control Policy*

QQGS70008 Policy Analyst to the Chief of Staff. Effective January 12, 2007.
QQGS70000 Special Assistant to the Deputy Director for Demand Reduction. Effective January 23, 2007.
QQGS70001 Public Affairs Specialist to the Associate Director for Public Affairs. Effective January 25, 2007.
QQGS70002 Confidential Assistant to the Associate Director for Public Affairs. Effective January 31, 2007.

*Section 213.3327 Department of Veterans Affairs*

DVGS60037 Special Assistant to the Assistant Secretary for Public and Intergovernmental Affairs. Effective January 05, 2007.

*Section 213.3303 Office of Science and Technology Policy*

TSGS60045 Assistant to the Director for Legislative Affairs to the Chief of Staff and General Counsel. Effective January 12, 2007.

*Section 213.3331 Department of Energy*

DEGS00556 Congressional Affairs Officer to the Director, Congressional Affairs. Effective January 19, 2007.
DEGS00557 Special Assistant to the Director, Office of Electricity Delivery and Energy Reliability. Effective January 19, 2007.
DEGS00550 Confidential Assistant to the Assistant Secretary for Congressional and Intergovernmental Affairs. Effective January 22, 2007.
DEGS00558 Advisor, Legislative Affairs to the Principal Deputy Assistant Secretary. Effective January 31, 2007.
DEGS00559 Special Assistant to the Assistant Secretary of Energy (Nuclear Energy). Effective January 22, 2007.
DEGS00552 Deputy Assistant Secretary for Environmental Management and National Security to the Assistant Secretary for Congressional and Intergovernmental Affairs. Effective January 24, 2007.
DEGS00555 Deputy Chief of Staff. Effective January 25, 2007.
DEGS00560 Deputy Assistant Secretary for Energy Policy to the Assistant Secretary for Congressional and Intergovernmental Affairs. Effective January 30, 2007.

*Section 213.3331 Federal Energy Regulatory Commission*

DRGS17040 Congressional, Intergovernmental and Public Affairs Specialist to the Director, Office of External Affairs. Effective January 10, 2007.

*Section 213.3332 Small Business Administration*

SBGS00576 Deputy Associate Administrator for Communications and Public Liaison to the Associate Administrator for Communications and Public Liaison. Effective January 09, 2007.
SBGS00608 Assistant Administrator for Congressional and Legislative Affairs. Effective January 09, 2007.
SBGS00609 Director of Performance Management to the Chief Financial Officer. Effective January 16, 2007.
SBGS00594 Press Secretary to the Associate Administrator for Communications and Public Liaison. Effective January 19, 2007.

*Section 213.3337 General Services Administration*

GSGS00184 Deputy Associate Administrator for Congressional and Intergovernmental Affairs. Effective January 05, 2007.
GSGS00185 Deputy Associate Administrator for Congressional and Intergovernmental Affairs. Effective January 11, 2007.
GSGS00182 Confidential Assistant to the Administrator. Effective January 22, 2007.
GSGS00190 Congressional Relations Analyst to the Associate Administrator for Congressional and Intergovernmental Affairs. Effective January 24, 2007.

*Section 213.3344 Occupational Safety and Health Review Commission*

SHGS60007 Counsel to the Commission Member. Effective January 31, 2007.

*Section 213.3379 Commodity Futures Trading Commission*

CTGS00030 Chief of Staff to the Chairperson. Effective January 05, 2007.
CTGS60768 Director, Office of External Affairs to the Chairperson. Effective January 05, 2007.

*Section 213.3384 Department of Housing and Urban Development*

DUGS60232 Staff Assistant to the Assistant Deputy Secretary for Field Policy and Management. Effective January 05, 2007.
DUGS60474 Special Policy Advisor to the Assistant Secretary for Public and Indian Housing. Effective January 05, 2007.
DUGS60291 Staff Assistant to the Secretary, Housing and Urban Development. Effective January 12, 2007.
DUGS60211 Advance Coordinator to the Director, Office of Executive Scheduling and Operations. Effective January 17, 2007.

*Section 213.3394 Department of Transportation*

DTGS60055 Associate Director for Governmental Affairs to the Assistant Secretary for Governmental Affairs. Effective January 05, 2007.
DTGS60257 Deputy Director for Public Affairs to the Assistant to the Secretary and Director of Public Affairs. Effective January 05, 2007.
DTGS60229 Special Assistant to the Administrator. Effective January 19, 2007.
DTGS60117 Assistant to the Secretary for Policy to the Secretary. Effective January 30, 2007.

Office of Personnel Management.

**Tricia Hollis,**

*Chief of Staff/Director of External Affairs.*

[FR Doc. E7–3756 Filed 3–2–07; 8:45 am]

**BILLING CODE 6325–39–P**

## POSTAL REGULATORY COMMISSION

**[Docket No. MC2006–7; Order No. 4]**

## Stamped Stationery and Cards

**AGENCY:** Postal Regulatory Commission.

**ACTION:** Notice.

**SUMMARY:** This document informs the public that the Postal Service proposes classification and fees for certain stamped stationery and cards. It identifies preliminary procedural steps, including the likelihood of a settlement teleconference. This information provides interested persons with an opportunity to participate in this case.

**DATES:** March 22, 2007: Deadline for intervention and responses to waiver motion; April 3, 2007: Prehearing conference, 10 a.m. in the Commission's hearing room.

**ADDRESSES:** Submit comments electronically via the Commission's Filing Online system at *http://www.prc.gov.*

**FOR FURTHER INFORMATION CONTACT:** Stephen L. Sharfman, General Counsel, 202–789–6820 and *stephen.sharfman@prc.gov.*

**SUPPLEMENTARY INFORMATION:** *Regulatory History*, 71 FR 51651 (August 30, 2006).

### I. Background

In Order No. 1475, the Commission found stamped stationery to be a postal service and concurrently established Docket No. MC2006–7 for the purpose of receiving a request from the Postal Service establishing a classification and fee schedule for stamped stationery.[1] On February 22, 2007, the Postal Service filed a request for a recommended decision to establish classifications and fees for Premium Stamped Stationery (PSS) and Premium Stamped Cards (PSC).[2]

In contemporaneous filings, the Postal Service submitted a conditional motion for waiver of the filing requirements[3] and a notice of a settlement teleconference.[4] The Request, accompanying testimony of witness Yeh (USPS–T–1), and related material are available for review in the Commission's docket room during regular business hours. They may also be accessed electronically, via the Internet, on the Commission's Web site (*http://www.prc.gov*).

### II. Proposed Classifications

Premium stamped stationery is sold by the Postal Service in pads consisting of 12 sheets of quality stock paper, featuring a design and imprinted with matching postage stamps. Each pre-stamped sheet has room for the name and address of the recipient and, on the reverse side, space for writing a message. Each sheet is designed to be folded, sealed, and mailed. Request at 1.

Premium stamped cards are sold by the Postal Service in booklets or packets, consisting of 10 to 20 cards of quality stock paper, imprinted with postage and featuring designs related to the imprinted postage. Each pre-stamped card has room for the name and address of the recipient on the right-hand side and space for a message on the left. The theme of the card adorns the reverse side of the card. Id. at 2.

The Postal Service denotes each of these services as ''premium'' to distinguish them from more utilitarian stamped envelopes and stamped cards that are already in the Domestic Mail Classification Schedule (DMCS). DMCS 961 and 962. The Postal Service proposes to amend the DMCS with separate provisions and fee schedules for PSS and PSC. *See* Request, Attachments A and B.

The Postal Service proposes, as more fully explained in the testimony of witness Yeh (USPS–T–1 at 2–6), a fee structure establishing a range of fees between minimum and maximum levels tied to the then-current First-Class Mail letter or card rate.[5] The Postal Service proposes to allow the range to change automatically with and in direct proportion to future changes in the applicable First-Class Mail letter or card rate. Under the proposal, the Postal Service would be authorized to change the fee within the range upon public notice.

The Postal Service notes that in Order No. 1475 the Commission identified stamped stationery as a specialty product that may justify a novel pricing approach, including the possibility of rate bands consisting of minimum and maximum fees with the Postal Service authorized to flex the fee within that range upon public notice. Request at 2–3; *see also* PRC Order No. 1475, *supra,* at 13–14. The Postal Service indicates that its proposed fee structure generally follows the approach suggested illustratively by the Commission. Request at 2.

### III. Conditional Request for Waiver of Filing Requirements

In support of its Request, the Postal Service states that its Compliance Statement (Attachment E to the Request) identifies information contained in its testimony and supporting documentation intended to satisfy the filing requirements of rules 54 and 64 of the Commission's Rules of Practice and Procedure. Request, Attachment E at 1.[6] The Postal Service notes that it has incorporated by reference pertinent materials from Docket No. R2006–1, the most recent omnibus rate case, and material periodically filed with the Commission. It asserts that that incorporation satisfies the filing requirements pertaining to classes of mail and special services. *Id.*

In addition, the Postal Service contends that the establishment of classifications and fees for Premium Stamped Stationery and Premium Stamped Cards represents new DMCS subsections and fees, providing an option for customers with very little impact on postal costs, volume, and revenues. It also asserts that there is substantial overlap between information sought in the general filing requirements and the materials provided in Docket No. R2006–1. *Id.* at 1–2.

Alternatively, the Postal Service requests a waiver of certain filing requirements if the Commission concludes that the materials incorporated by reference are not sufficient to satisfy those requirements. *Id.* at 3.[7]

### IV. Notice of Settlement Teleconference

In its Request, the Postal Service indicates that despite its best intentions

[1] *See* PRC Order No. 1475, August 24, 2006 and PRC Order No.1476, August 24, 2006.

[2] Request of the United States Postal Service for a Recommended Decision to Establish Classifications and Fees for Premium Stamped Stationery and Premium Stamped Cards, February 22, 2007 (Request).

[3] Statement of the United States Postal Service Concerning Compliance with Filing Requirements and Conditional Motion for Waiver, February 22, 2007 (Motion for Waiver).

[4] Notice of Settlement Teleconference, February 22, 2007 (Notice).

[5] The proposed minimum fee for PSS is 2 times the First-Class Mail letter rate and for PSC is 1 times the First-Class Mail card rate. The proposed maximum fee for PSS is 3 times the First-Class Mail letter rate. USPS–T–1, Attachment A, workpaper PSSPSC–WP1. The proposed maximum fee for PSC apparently is 3 times the First-Class Mail card rate. Id. at 10, Attachment A, workpapers PSSPSC–WP1 and WP2; but see USPS–T–1 at 5, lines 1–3. The Postal Service should reconcile these statements.

[6] Motion for Waiver at 1. The Motion for Waiver also references rule 162, which concerns market tests. That reference is inapposite.

[7] In support of its conditional motion, the Postal Service cites 39 CFR 3001.54(r), 3001.64(h)(3), and 3001.67a. The reference to rule 67a, which concerns experimental changes, is inapposite.

it was unable to engage in any pre-filing consultations with participants due to the press of other business. The Postal Service states, however, that it informed participants (from Docket No. C2004–3) of its intention to file this Request, that it is committed to engage in settlement discussions, and that it encouraged participants to engage in informal requests for additional information before commencing formal discovery to develop a record in pursuit of a mutually agreeable settlement agreement. Request at 3–4.

The Postal Service reads Order No. 1475 as authorizing settlement procedures in this proceeding and thus has not requested that such procedures be established. *Id.* at 4. Instead, the Postal Service filed a Notice of Settlement Teleconference advising participants to inform it of their availability to participate in such a conference during the period March 5 through March 23, 2007. Notice at 1.

**V. Commission Response**

*Intervention.* Order No. 1476 set the due date for notices of intervention at 28 days following submission of the Postal Service's Request. Since the Request was filed February 22, 2007, notices of intervention from any interested persons are due no later than March 22, 2007. The notice of intervention shall be filed electronically via the Commission's Web site (*see* Filing Online), unless a waiver is obtained for hardcopy filing. 39 CFR 3001.9(a) and 10(a). Notices should indicate whether participation will be on a full or limited basis. *See* 39 CFR 3001.20 and 3001.20a. No decision has been made at this point on whether a hearing will be held in this case.

*Settlement.* In Order No. 1475, the Commission suggested that the Postal Service may wish to engage participants in a pre-filing dialogue ''in an effort to fashion a broadly acceptable pricing approach.'' PRC Order No. 1475 at 15 (footnote omitted). As noted above, the Postal Service's efforts to do so were thwarted by the press of other business. Its proposal to conduct a settlement teleconference is reasonable, particularly given the dispersed geographic location of the participants.

The Commission appoints Postal Service counsel as settlement coordinator. In this capacity, Postal Service counsel shall file periodic reports on the status of settlement discussions. At a minimum, a periodic report on the status of settlement discussions shall be filed no later than two business days prior to the prehearing conference scheduled herein. The Commission authorizes the settlement coordinator to hold one or more settlement teleconferences from March 5–28, 2007. In addition, the Commission will make its hearing room available for conducting settlement conferences. Authorization of settlement discussions does not constitute a finding on the necessity of hearings in this case.

*Prehearing conference.* A prehearing conference will be held April 3, 2007, at 10 a.m. in the Commission's hearing room. Participants shall be prepared to identify any issue(s) that would indicate a need to schedule a hearing, along with other matters referred to in this order.

*Conditional Motion for Waiver.* Participants may comment on the Postal Service's conditional motion to waive certain filing requirements. Responses to the Postal Service's Motion for Waiver are due on or before March 22, 2007.

*Representation of the general public.* In initiating this proceeding, the Commission designated Shelley S. Dreifuss, director of the Commission's Office of the Consumer Advocate (OCA), to represent the interests of the general public in this proceeding. *See* PRC Order No. 1476 at 2–3.

*Administrative matter.* The docket name has been modified to reflect the inclusion of stamped cards in the Postal Service's Request.

**Ordering Paragraphs**

*It is ordered:*

1. The Commission will consider the Postal Service Request referred to in the body of this order in Docket No. MC2006–7.

2. The Commission will sit *en banc* in this proceeding.

3. Postal Service counsel is appointed to serve as settlement coordinator in this proceeding.

4. The deadline for filing notices of intervention is March 22, 2007.

5. A prehearing conference will be held April 3, 2007 at 10 a.m. in the Commission's hearing room.

6. Responses to the Postal Service's Motion for Waiver of certain filing requirements are due on or before March 22, 2007.

7. The Secretary shall arrange for publication of this notice and order in the **Federal Register**.

By the Commission.

**Steven W. Williams,**

*Secretary.*

[FR Doc. E7–3823 Filed 3–2–07; 8:45 am]

BILLING CODE 7710–FW–P

## SECURITIES AND EXCHANGE COMMISSION

**[Release No. IC–27745; 812–13344]**

## BLDRS Index Funds Trust, et al.; Notice of Application

February 28, 2007.

**AGENCY:** Securities and Exchange Commission (''Commission'').

**ACTION:** Notice of application for an order under section 6(c) of the Investment Company Act of 1940 (''Act'') for an exemption from sections 2(a)(32), 4(2), 22(d), 24(d) and 26(a)(2)(C) of the Act and rule 22c–1 under the Act; under sections 6(c) and 17(b) of the Act for an exemption from sections 17(a)(1) and (a)(2) of the Act; and under section 17(d) of the Act and rule 17d–1 under the Act to permit certain joint transactions.

**SUMMARY OF APPLICATION:** Applicants request an order that would permit: (a) BLDRS Index Funds Trust (the ''Fund''), a unit investment trust (''UIT'') with multiple series (each series, a ''Trust'') whose portfolios will consist of the component stocks of various specified indices (collectively, the ''Benchmark Indices,'' and each, a ''Benchmark Index''), to issue shares (''Trust Shares'') that are only redeemable in large aggregations; (b) secondary market transactions in Trust Shares to occur at negotiated prices; (c) dealers to sell Trust Shares to purchasers in the secondary market unaccompanied by a prospectus when prospectus delivery is not required by the Securities Act of 1933 (''Securities Act''); (d) the Trusts, rather than the Sponsor (as defined below), to bear certain expenses associated with maintaining the Trusts; (e) certain ''affiliated persons'' of the Trusts to deposit securities into, and receive securities from, the Trusts in connection with the purchase and redemption of Trust Shares; and (f) the Trusts to reimburse the Sponsor for payment of an annual licensing fee to The Bank of New York (''BoNY'').

**APPLICANTS:** The Fund, PowerShares Capital Management LLC (''PowerShares,'' together with its successor in interest [1] and with any person, directly or indirectly, controlling, controlled by, or under common control with, PowerShares, ''Sponsor''), and ALPS Distributors, Inc. (''Distributor'').

**FILING DATES:** The application was filed on November 20, 2006. Applicants have

[1] ''Successors in interest'' means any entity or entities that result from a reorganization into another jurisdiction or a change in the type of business organization.

agreed to file an amendment during the notice period, the substance of which is reflected in this notice.

**HEARING OR NOTIFICATION OF HEARING:** An order granting the requested relief will be issued unless the Commission orders a hearing. Interested persons may request a hearing by writing to the Commission's Secretary and serving applicants with a copy of the request, personally or by mail. Hearing requests should be received by the Commission by 5:30 p.m. on March 20, 2007, and should be accompanied by proof of service on applicants, in the form of an affidavit or, for lawyers, a certificate of service. Hearing requests should state the nature of the writer's interest, the reason for the request, and the issues contested. Persons who wish to be notified of a hearing may request notification by writing to the Commission's Secretary.

**ADDRESSES:** Addresses: Secretary, U.S. Securities and Exchange Commission, 100 F Street, NE., Washington, DC 20549–1090. *Applicants:* H. Bruce Bond, PowerShares Capital Management LLC, 301 West Roosevelt Road, Wheaton, IL 60187.

**FOR FURTHER INFORMATION CONTACT:** Jaea F. Hahn, Senior Counsel, at (202) 551–6870, or Janet M. Grossnickle, Branch Chief, at (202) 551–6821 (Division of Investment Management, Office of Investment Company Regulation).

## Applicants' Representations

1. Each Trust is a unit investment trust that is or will be organized under the laws of the State of New York. The Sponsor is a wholly owned subsidiary of AIM Management Group Inc.[2] The Bank of New York (''BoNY'') acts as trustee to each Trust (''Trustee'') pursuant to a trust agreement entered into by and between BoNY and the Initial Sponsor (each a ''Trust Agreement''). The Distributor is registered as a broker-dealer under the Securities Exchange Act of 1934 (''Exchange Act'') and serves, on an agency basis, as principal underwriter of the Trusts.

2. Each Trust holds a portfolio of securities (''Portfolio Securities'') consisting of substantially all of the securities in substantially the same weighting as the component securities of the Benchmark Index that it tracks (the ''Index Securities''). There are currently four Trusts (''Current Trusts'').[3] The Benchmark Indices for the Current Trusts (the ''Initial Benchmark Indices'') are compiled by BoNY (the ''BoNY Index Provider'').[4] Pursuant to guidelines adopted by BoNY for the Index Provider, the BoNY personnel involved in compiling the Benchmark Indices cannot include any BoNY employees who are members of the BoNY division that provides trustee services to the Trusts, any broker-dealer affiliated with BoNY, BoNY's asset management division, or BoNY's private banking group.

3. In the future, applicants may offer additional Trusts based on other Benchmark Indices (''Future Trusts''). Any Future Trust will (a) be organized under New York state law pursuant to a trust agreement substantially identical to the Trust Agreements, (b) be sponsored by the Sponsor, and (c) comply with the terms and conditions of the requested order. No entity that creates, compiles, sponsors or maintains a Benchmark Index will be an affiliated person, as defined in section 2(a)(3) of the Act, or an affiliated person of an affiliated person, of the Sponsor, Distributor or promoter of a Trust.

4. Trust Shares, units of beneficial interest in the Trusts, are designed to provide investors with an instrument that closely tracks the Benchmark Indices, trades like a share of common stock, and pays periodic dividends proportionate to those paid by the Index Securities to the extent they exceed the Trust's fees and expenses.[5] The Trustee makes adjustments to the Portfolio Securities to reflect changes made by the BoNY Index Provider to the composition and weighting of the Index Securities.[6] All adjustments to the Portfolio Securities are made by the Trustee as set forth in the Trust Agreements and are non-discretionary. Applicants state that the Trustee, consistent with its fiduciary duties, may utilize a broker-dealer that is an ''affiliated person,'' as defined in section 2(a)(3) of the Act, of the Trustee (each, an ''Affiliated Broker-Dealer'') in executing the transactions that are necessitated by the required adjustment(s).[7] Applicants state that neither BoNY nor any Affiliated Broker-Dealer purchases or sells DRs on a principal basis, or intends to sell DRs or any other securities to any Trust on a principal basis. BoNY and its Affiliated Broker-Dealers would engage in transactions with a Trust on an agency basis only.

5. Trust fees and expenses are first paid out of income received by the Trust in the form of dividends and other distributions on Portfolio Securities.[8] Each Trust pays the Trustee a fee ranging from 0.06% to 0.10% of the net asset value (''NAV'') of the Trust on an annualized basis, such percentage to vary based on the NAV of the Trust. The Trustee in its discretion may waive all or any portion of such fee.

6. Pursuant to a license agreement (''License Agreement''), the BoNY Index

[2] On October 18, 2006, PowerShares entered into a Transaction Agreement (''Transaction Agreement'') with The Nasdaq Stock Market (''Nasdaq''), the parent of Nasdaq Global Funds, Inc. (formerly named Nasdaq AMEX Investment Product Services, Inc., and later renamed Nasdaq Financial Products Services, Inc., the ''Initial Sponsor'') pursuant to which the Initial Sponsor will transfer sponsorship of the Trusts to PowerShares. In connection with the Transaction Agreement, PowerShares is seeking exemptive relief substantially identical to the relief granted to the Trust pursuant to a Commission order (Investment Company Act Release No. 25797 (Nov. 8, 2002), as amended by Investment Company Act Release No. 26415 (Apr. 9, 2004)). The transfer of sponsorship of the Trust from the Initial Sponsor to PowerShares is contingent upon receipt of the exemptive relief requested in the application.

[3] The Current Trusts are the BLDRS Asia 50 ADR Index Fund, BLDRS Developed Markets 100 ADR Index Fund, BLDRS Emerging Markets 50 ADR Index Fund and BLDRS Europe 100 ADR Index Fund. All Trusts that currently intend to rely on the requested order have been named as applicants. Any other existing Trust or any Trust organized in the future that relies on the requested order will comply with the terms and conditions of the application.

[4] The Benchmark Indices are the (a) BoNY Asia 50 ADR Index, (b) BoNY Developed Markets 100 ADR Index, (c) BoNY Emerging Markets 50 ADR Index and (d) BoNY Europe 100 ADR Index. The Initial Benchmark Indices are sub-indices of the BoNY ADR Index, which is an index of all U.S. exchange-listed Depositary Receipts (''DRs''), subject to certain eligibility requirements. Applicants note that BoNY is a prominent participant in the DR market, and receives various fees and commissions in connection with its DR program functions. BoNY has informed applicants that the index compilation is bound by objective criteria, and that the identity of the depositary bank for a DR is never a criterion in the selection of Index Securities. As discussed in the application, BoNY represents that its DR sales efforts are not coordinated with the compilation of the Benchmark Indices.

[5] The Trusts make quarterly distributions when dividends on the Portfolio Securities and other income of the Trust, if any, exceed fees and expenses accrued by the Trust during the previous quarter. The Trustee may vary the frequency of dividend distributions under certain circumstances.

[6] The BoNY Index Provider determines, comprises and calculates Benchmark Indices without regard to any Trust. BoNY has instituted formal firewall procedures to ensure that no BoNY personnel involved in providing trustee services to the Trusts have access to information regarding changes to the Benchmark Indices prior to their public announcement.

[7] BoNY has adopted firewall procedures that prohibit communications regarding changes or proposed changes to the Benchmark Indices between any Affiliated Broker-Dealer and the BoNY personnel involved in the compilation of the Benchmark Indices.

[8] Applicants expect that the income of the Trust may be insufficient to pay the fees and expenses of the Trust. In such circumstances, the Trustee will sell Portfolio Securities to generate sufficient cash to pay the Trust fees and expenses in excess of Trust income. The Trustee is ordinarily required to sell Portfolio Securities whenever the Trustee determines that accrued fees and expenses exceed dividends and other Trust accrued income on a projected basis by more than 0.01% of the NAV of the Trust.

Provider has granted the Sponsor a license to use the Benchmark Indices and certain trademarks of BoNY. The Sponsor will pay the BoNY Index Provider an annual licensing fee for each Benchmark Index and will seek reimbursement from each Trust for the fee charged in connection with its Benchmark Index. The Sponsor will pay the Distributor a flat annual fee for services provided to the Trusts. The Sponsor will not seek reimbursement from any Trust for such payment without obtaining prior exemptive relief from the Commission.

7. Trust Shares are issued in aggregations of 50,000 shares (''Creation Units''). Orders to purchase Creation Units generally must be delivered to the Distributor through a party that has executed a participant agreement with the Distributor and Trustee, and is either (a) a participant in the Continuous Net Settlement System of the National Securities Clearing Corporation (''NSCC,'' and the NSCC process of placing orders, the ''Trust Shares Clearing Process''), or (b) a Depository Trust Company (''DTC'') participant, but such entity or person is not required to be a Nasdaq member.

8. An investor wishing to purchase a Creation Unit from the Trust will have to transfer to the Trustee a ''Portfolio Deposit,'' consisting of the following: (a) A portfolio of securities substantially similar in composition and weighting to the Index Securities (''Deposit Securities''); [9] (b) a cash payment equal to the dividends accrued on the Portfolio Securities since the last dividend payment on the Portfolio Securities, net of expenses and liabilities (''Income Net of Expense Amount''); and (c) a cash payment or credit to equalize any differences between the market value of the Deposit Securities and the NAV of the Trust on a per Creation Unit basis (''Balancing Amount,'' and together with the Income Net of Expense Amount, the ''Cash Component'').[10] The Sponsor or its designee makes available on each Business Day a list of the names and the required number of shares of each of the Deposit Securities in the current Portfolio Deposit, as well as the Income Net of Expense Amount, effective through and including the previous Business Day, per outstanding Trust Share.[11] The Sponsor or its designee makes available on the Exchange, every 15 seconds of each Business Day, the sum of the Income Net of Expense Amount and the value of the Deposit Securities, on a per Trust Share basis. An investor making a Portfolio Deposit is charged a service fee (''Transaction Fee'') to be paid to the Trustee to defray the Trustee's costs in processing transactions for the Trust.[12]

9. Orders to purchase Creation Units are placed with the Distributor, who is responsible for transmitting orders to the Trustee. The Distributor issues confirmations of acceptance, issues delivery instructions to the Trustee to implement the delivery of Creation Units, and maintains records of the orders and the confirmations. The Distributor also is responsible for delivering prospectuses to purchasers of Creation Units and may provide certain other administrative services.

10. Persons purchasing Creation Units from the Trust may hold the Trust Shares or sell some, or all, of them in the secondary market. Trust Shares of the Current Trusts are listed on Nasdaq and all Trust Shares will be listed on a national securities exchange as defined in section 2(a)(26) of the Act (''Exchange''). Trust Shares are traded in the secondary market as individual units (*i.e.*, in less than Creation Units) in the same manner as other equity securities. Participating Parties act as market makers (''Market Makers'') on Nasdaq and maintain a market for Trust Shares.[13] The price of each Trust Share that trades on Nasdaq is based on the current bid-offer market. Transactions involving Trust Shares on Nasdaq are subject to customary brokerage commissions and charges. Applicants state that the price at which Trust Shares trade is disciplined by arbitrage opportunities created by the continuous ability to purchase or redeem Creation Units at their NAV, which ensures that Trust Shares do not trade at a material premium or discount in relation to their NAV.[14]

11. Purchasers of Creation Units include institutional investors and arbitrageurs, which include institutional investors. Market Makers or specialists of an Exchange also may purchase Trust Shares in connection with their market making activities. Secondary market purchasers of Trust Shares include both institutional and retail investors.[15]

12. Applicants make available a standard Trust Shares product description (''Product Description'') to members and member organizations for

[9] The Trusts will comply with the federal securities laws in accepting Deposit Securities and satisfying redemptions with Redemption Securities (as defined below), including that the Deposit Securities and Redemption Securities are sold in transactions that would be exempt from registration under the Securities Act of 1933. The specified Deposit Securities and Redemption Securities generally will correspond pro rata to the Portfolio Securities.

[10] At the close of the market on each Business Day (as defined below), the Trustee calculates the NAV of each Trust, divides that amount by the total number of shares outstanding (yielding a ''Per Trust Share NAV''), multiplies the Per Trust Share NAV by the number of Trust Shares in a Creation Unit (*e.g.*, 50,000), thereby calculating the NAV per Creation Unit. The Trustee then calculates the required number of shares of Index Securities and the Cash Component that will comprise a Portfolio Deposit for the following Business Day. A ''Business Day'' is any day that the Nasdaq or any other Exchange that lists Trust Shares is open for business and any day that the Trusts are open for business as required by section 22(e) of the Act.

[11] The cash equivalent of an Index Security may be included in the Cash Component of a Portfolio Deposit in lieu of the Index Security if (a) the Trustee determines that an Index Security is likely to be unavailable or available in insufficient quantity for inclusion in a Portfolio Deposit, or (b) a particular investor is restricted from investing or engaging in transactions in the Index Security (for example, when the investor is a broker-dealer restricted by regulation or internal policy from investing in securities issued by a company on whose board of directors one of its principals serves or when the investor is a broker-dealer and the security is on its ''restricted list'').

[12] The Transaction Fee will be $10 per each security ''name'' (*i.e.*, each security identified by a separate CUSIP number) in the Portfolio Deposit, rounded to the nearest $500 for BLDRS Asia 50 ADR Index Fund and BLDRS Emerging Markets 50 ADR Index Fund and $1,000 for BLDRS Developed Markets 100 ADR Index Fund and BLDRS Europe 100 ADR Index Fund per Participating Party (as defined below) per day, regardless of the number of Creation Units purchased by such Participating Party on such day. ''Participating Party'' means an NSCC participant who may place orders through the Trust Shares Clearing Process. The Transaction Fee may be changed by the Trustee with the Sponsor's consent, but will not exceed 0.20% of the value of a Creation Unit. Investors who purchase Creation Units outside the Trust Shares Clearing Process will pay the Transaction Fee plus an amount not to exceed three times the Transaction Fee. The amount of the Transaction Fee is disclosed in the prospectus for the Trust.

[13] No particular Market Maker is contractually obligated to make a market in Trust Shares although Nasdaq's listing requirements stipulate that at least two Market Makers must be registered in Trust Shares to maintain a listing on Nasdaq. Applicants state that no Market Maker will be an affiliated person, promoter, or principal underwriter of the Trusts, or an affiliated person of such persons, within the meaning of section 2(a)(3) of the Act, except pursuant to section 2(a)(3)(A) or (C) of the Act due to ownership of Trust Shares, as described below.

[14] Applicants do not believe there are any special liquidity issues as to constituents in the Benchmark Indices, in light of the fact that constituent DRs are selected based on liquidity that is high relative to DRs that would otherwise fit the relevant criteria. The constituent DRs of the Benchmark Indices are traded and priced on national securities exchanges, as are the constituent securities of other indices on which exchange-traded funds investing in domestic securities are based. Accordingly, applicants believe that the pricing transparency for DRs should be equivalent to that of other securities that are traded and priced on national securities exchanges. Because there are no apparent differences in the pricing transparency between DRs and such other equity securities, applicants believe that there are no corresponding differences in, and no deleterious effects on, the arbitrage efficiency of the Trusts.

[15] Trust Shares are registered in book-entry form only. DTC or its nominee is the record owner of all outstanding Trust Shares. Beneficial ownership of Trust Shares is shown on the records of DTC or its participants.

distribution to investors purchasing Trust Shares in accordance with Exchange rules. Currently, the rules of the National Association of Securities Dealers (''NASD'') require that NASD members distribute a Product Description to all purchasers of Trust Shares. The Product Description provides a plain English overview of a Trust, including the material risks and potential rewards of owning Trust Shares, and discloses the salient aspects of Trust Shares. The Product Description advises investors that a prospectus for Trust Shares is available without charge from the investor's broker or from the Distributor. Applicants believe that the volume of purchase transactions in which an investor will not receive a Product Description does not constitute a significant portion of the market activity in Trust Shares.

13. Trust Shares are not individually redeemable, except upon termination of the Trust. Trust Shares are redeemable in Creation Units only. An investor redeeming a Creation Unit will receive a portfolio of securities typically identical in composition and weighting to the Deposit Securities as of the date the redemption request was made (''Redemption Securities''). The redeeming investor may receive the cash equivalent of an Index Security (a) when the Trustee determines that an Index Security is likely to be unavailable or available in insufficient quantity for delivery by the Trust, or (b) upon the request of the redeeming investor (because, for example, the redeeming investor is restricted by regulation or otherwise from holding an Index Security). The redeeming investor also may receive, or may pay, cash in an amount equal to the Cash Component in effect on the relevant Business Day for Portfolio Deposits (''Cash Redemption Amount''). The redeeming investor will pay a Transaction Fee, which will be calculated in the same manner as a Transaction Fee payable in connection with the purchase of a Creation Unit on the relevant Business Day.

14. Because each Trust ordinarily redeems in kind, rather than in cash, the Trustee will not have to maintain cash reserves for redemptions. This allows the assets of each Trust to be committed as fully as possible to tracking the relevant Benchmark Index, and allows each Trust to track the relevant Benchmark Index more closely than other market basket products that must allocate a portion of their assets to cash for redemptions.

**Applicants' Legal Analysis**

1. Applicants request an order under (a) section 6(c) of the Act granting an exemption from sections 2(a)(32), 4(2), 22(d), 24(d) and 26(a)(2)(C) of the Act and rule 22c–1 under the Act; (b) sections 6(c) and 17(b) of the Act granting an exemption from sections 17(a)(1) and (2) of the Act; and (c) section 17(d) and rule 17d–1 under the Act to permit certain joint transactions.

2. Section 6(c) of the Act provides that the Commission may exempt any person, security, or transaction, or any class of persons, securities, or transactions, if and to the extent that such exemption is necessary or appropriate in the public interest and consistent with the protection of investors and the purposes fairly intended by the policy and provisions of the Act.

*Sections 4(2) and 2(a)(32) of the Act*

3. Section 4(2) of the Act defines a UIT as an investment company that, among other things, issues only redeemable securities. Section 2(a)(32) of the Act defines a redeemable security as any security, other than short-term paper, under the terms of which the holder, upon its presentation to the issuer is entitled to receive approximately a proportionate share of the issuer's current net assets, or the cash equivalent. Because Trust Shares would not be individually redeemable, applicants request an order that would permit the Trust to register as a UIT and issue Trust Shares that are redeemable in Creation Units only. Applicants state that investors may purchase and redeem Trust Shares through the Trust in Creation Units. Applicants further state that, because the market price of Creation Units is disciplined by arbitrage opportunities, investors should be able to sell individual Trust Shares in the secondary market at approximately NAV.

*Section 22(d) of the Act and Rule 22c–1 Under the Act*

4. Section 22(d) of the Act, among other things, prohibits a dealer from selling a redeemable security that is being currently offered to the public by or through an underwriter, except at the current public offering price described in the prospectus. Rule 22c–1 under the Act generally requires that a dealer selling, redeeming, or repurchasing a redeemable security do so only at a price based on its NAV next computed after receipt of a tender of the security for redemption or of an order to purchase or sell the security. Applicants state that secondary market trading in Trust Shares takes place at negotiated prices, not at a current offering price described in the prospectus and not at a price based on NAV. Thus, purchases and sales of Trust Shares in the secondary market do not comply with section 22(d) and rule 22c–1, and applicants request an exemption from these provisions.

5. Applicants maintain that, while there is little legislative history regarding section 22(d), its provisions and those of rule 22c–1 appear to have been designed to (a) prevent dilution caused by certain riskless trading schemes by principal underwriters and contract dealers, (b) prevent unjust discrimination or preferential treatment among buyers, and (c) assure an orderly distribution of shares by eliminating price competition from dealers offering shares at less than the published sales price and repurchasing shares at more than the published redemption price. Applicants believe that none of these purposes is thwarted by permitting Trust Shares to trade in the secondary market at negotiated prices. Applicants state that secondary market trading in Trust Shares does not involve the Trust directly and cannot, therefore, result in dilution of Trust assets. Applicants also state that, to the extent different prices exist during a trading day, or from day to day, for Trust Shares, such variances occur as a result of third-party market forces, such as supply and demand, and not as a result of unjust or discriminatory manipulation. Therefore, applicants assert that secondary market transactions in Trust Shares do not create discrimination or preferential treatment among buyers. Finally, applicants contend that the proposed distribution system is orderly because arbitrage activity ensures that the difference between the market price of Trust Shares and their NAV remains narrow.

*Section 24(d) of the Act*

6. Section 24(d) of the Act provides, in pertinent part, that the prospectus delivery exemption provided to dealer transactions by section 4(3) of the Securities Act does not apply to any transaction in a redeemable security issued by a UIT. Applicants request an exemption from section 24(d) to permit dealers in Trust Shares to rely on the prospectus delivery exemption provided by section 4(3) of the Securities Act.[16]

[16] Applicants are not seeking relief from the prospectus delivery requirement for non-secondary market transactions, including purchases of Creation Units or those involving an issuer. Applicants state that persons purchasing Creation Units will be cautioned in the prospectus that some activities on their part may, depending on the

7. Applicants state that the secondary market for Trust Shares is significantly different from the typical secondary market for UIT securities, which is usually maintained by the sponsor of the UIT. Trust Shares are listed on an Exchange and trade in the same manner as listed securities issued by operating companies and closed-end investment companies. Dealers selling shares of operating companies and closed-end investment companies in the secondary market are generally not required to deliver a prospectus to a purchaser.

8. Applicants contend that Trust Shares, as listed securities, merit a reduction in the compliance costs and regulatory burdens resulting from the imposition of prospectus delivery obligations in the secondary market. Because Trust Shares are exchange-listed, prospective investors have access to several types of market information about the product. Applicants state that quotations, last sale price, and volume information are continually available on a real-time basis through the consolidated tape and are available throughout the day on brokers' computer screens and other electronic services. The previous day's price and volume information also is published in the financial section of newspapers. The Sponsor publishes daily, on a per Trust Share basis, the Income Net of Expense Amount. The Fund's Web site contains quantitative information, updated on a daily basis, regarding the previous Business Day's NAV and the reported closing price. The Web site also includes for each Trust, a calculation of the premium or discount of the closing price against NAV and data, in chart format, displaying the frequency distribution of discounts and premiums of the closing price against the NAV, within appropriate ranges, for each of the four previous calendar quarters.

9. In addition, secondary market purchasers generally receive the Product Description. Applicants state that, while the Product Description is not intended as a substitute for a prospectus, it contains pertinent information about Trust Shares. Applicants also note that Trust Shares are understandable to retail investors as a product that tracks the Benchmark Indices.

*Section 26(a)(2)(C) of the Act*

10. Section 26(a)(2)(C) of the Act requires, among other things, that a UIT's trust indenture prohibit payments to the trust's depositor (in the case of a Trust, the Sponsor), and any affiliated person of the depositor, except payments for performing certain administrative services. Applicants request an exemption from section 26(a)(2)(C) to permit any Trust to reimburse the Sponsor for certain licensing, registration, and marketing expenses.

11. Applicants state that, ordinarily, a sponsor of a UIT has an opportunity to profit in connection with the creation of a trust in two ways—through the difference between the acquisition cost of the securities and their value on the date of deposit in the trust and, to the extent a secondary market is maintained for units, through the imposition of sales charges on resales of units. Expenses normally incurred in the creation and maintenance of a trust can then be offset against such profits. Applicants assert, however, that under the proposed structure, the usual sources of income are not available because the Sponsor does not impose a sales load or deposit Index Securities into the Trust. Applicants contend that the motivation for the limitations imposed in section 26(a)(2)(C) of the Act was the fear that sponsors could take unfair advantage of a trust to profit, when profits were already being generated through sales charges and market gains (on the securities deposited by the sponsor). Applicants contend that no such opportunity to profit exists for Sponsor.

12. Applicants state that permitting a Trust to reimburse the Sponsor for certain of the Trust's expenses is no more disadvantageous to the holders of Trust Shares than allowing the expenses to be imposed indirectly as offsets to sales loads and other charges, as is done by typical UITs. Applicants state that a Trust pays the Sponsor only its actual out-of-pocket expenses. Finally, applicants state that the payment is capped at 30 basis points of the Trust's NAV on an annualized basis, with any expenses in excess of that amount to be absorbed by the Sponsor.

*Section 17(a) of the Act*

13. Section 17(a) of the Act generally prohibits an affiliated person of a registered investment company, or an affiliated person of such person, from selling any security to or purchasing any security from, the investment company. Section 2(a)(3) defines ''affiliated person'' to include any person directly or indirectly owning, controlling, or holding with power to vote, 5% or more of the outstanding voting securities of the other person, and any person controlling, controlled by or under common control with the other person. Section 2(a)(9) provides that a control relationship will be presumed where one person owns 25% or more of another person's voting securities. Applicants state that, because the definition of ''affiliated person'' includes any person owning 5% or more, or more than 25%, of an issuer's outstanding voting securities, every purchaser of a Creation Unit will be an affiliated person of the Trust so long as 20 or fewer Creation Units are in existence. Applicants request an exemption from section 17(a) under sections 6(c) and 17(b) to permit persons that are affiliated persons solely by virtue of a 5% or more, or more than 25%, ownership interest in a Trust (or affiliated persons of such persons that are not otherwise affiliated with the Trusts) to purchase and redeem Creation Units through in-kind transactions.

14. Section 17(b) authorizes the Commission to exempt a proposed transaction from section 17(a) if the terms of the transaction, including the consideration to be paid or received, are reasonable and fair and do not involve overreaching, and the proposed transaction is consistent with the policies of the registered investment company and with the general purposes of the Act. Applicants assert that no useful purpose would be served by prohibiting the affiliated persons described above from making in-kind purchases and redemptions of Creation Units. The composition of a Portfolio Deposit made by a purchaser, like the Redemption Securities and Cash Redemption Amount given to a redeeming investor, is the same regardless of the investor's identity, and is valued under the same objective standards applied to valuing the Portfolio Securities in connection with determining the Trust's NAV. Therefore, applicants state that in-kind purchases and redemptions afford no opportunity for the affiliated persons described above to effect a transaction detrimental to other holders of Trust Shares. Applicants also believe that in-kind

circumstances, result in their being deemed statutory underwriters and subject them to the prospectus delivery and liability provisions of the Securities Act. For example, a broker-dealer firm and/or its client may be deemed a statutory underwriter if it takes Creation Units after placing an order with the Distributor, breaks them down into the constituent Trust Shares, and sells Trust Shares directly to its customers, or if it chooses to couple the purchase of a supply of new Trust Shares with an active selling effort involving solicitation of secondary market demand for Trust Shares. The prospectus states that whether a person is an underwriter depends upon all the facts and circumstances pertaining to that person's activities. The prospectus also states that dealers who are not ''underwriters'' but are participating in a distribution (as contrasted to ordinary secondary market trading transactions), and thus dealing with Trust Shares that are part of an ''unsold allotment'' within the meaning of section 4(3)(C) of the Securities Act, would be unable to take advantage of the prospectus delivery exemption provided by section 4(3) of the Securities Act.

purchases and redemptions do not result in abusive self-dealing or overreaching by affiliated persons of the Funds.

*Section 17(d) of the Act and Rule 17d–1 Under the Act*

15. Section 17(d) of the Act and rule 17d–1 under the Act prohibit any affiliated person of, or principal underwriter for, a registered investment company, or any affiliated person of the affiliated person or the principal underwriter, acting as principal, from effecting any transaction in connection with any joint enterprise or other arrangement or profit-sharing plan in which the investment company participates, unless an application regarding the joint transaction has been filed with the Commission and granted by order. Under rule 17d–1, in passing upon such applications, the Commission considers whether the participation of the registered investment company in the joint transaction is consistent with the provisions, policies and purposes of the Act and the extent to which such participation is on a basis different from or less advantageous than that of other participants.

16. Applicants request an order under rule 17d–1 that would permit a Trust to reimburse the Sponsor for the payment to the BoNY Index Provider of an annual license fee under the License Agreement. Applicants believe that relief is necessary because the Sponsor may be deemed an affiliated person of the Trust, as defined in section 2(a)(3) of the Act, and the Trust's undertaking to reimburse the Sponsor might be deemed a joint enterprise or other joint arrangement in which the Trust is a participant, in contravention of section 17(d) and rule 17d–1.

17. The License Agreement allows applicants to use the Benchmark Indices as bases for Trust Shares and to use certain of BoNY's trade name and trademark rights. Applicants believe that BoNY is a valuable name that is well-known to investors and believe that investors wish to invest in instruments that closely mirror the Benchmark Indices. In view of this, applicants state that it is necessary to obtain from BoNY the License Agreement so that appropriate reference to BoNY may be made in materials describing Trust Shares and the Trust. Applicants assert that the terms and provisions of the License Agreement are comparable to the terms and provisions of other similar license agreements and that the annual license fee is for fair value, is in an amount comparable to that which would be charged by the BoNY Index Provider for similar arrangements, and is in an amount comparable to that charged by licensors in connection with the formation of other UITs based on other indices. For these reasons, applicants state that the proposed license fee arrangement satisfies the standards of section 17(d) and rule 17d–1.

**Applicants' Conditions**

*Applicants agree that any order granting the requested relief will be subject to the following conditions:*

1. Each Trust's prospectus and Product Description will clearly disclose that, for purposes of the Act, Trust Shares are issued by a registered investment company, and the acquisition of Trust Shares by investment companies is subject to the restrictions of Section 12(d)(1) of the Act, except as permitted by an exemptive order that permits registered investment companies to invest in Trust Shares beyond the limits in Section 12(d)(1)(A), subject to certain terms and conditions, including that the registered investment company enter into an agreement with the Trust regarding the terms of the investment.

2. As long as a Trust operates in reliance on the requested order, the Trust Shares will be listed on an Exchange.

3. The Web site for the Trusts, which will be publicly accessible at no charge, will contain the following information, on a per Trust Share basis, for each Trust: (a) The prior Business Day's NAV and the reported closing price, and a calculation of the premium or discount of such price against such NAV; and (b) data in chart format displaying the frequency distribution of discounts and premiums of the daily closing price against the NAV, within appropriate ranges, for each of the four previous calendar quarters. In addition, the Product Description for each Trust will state that the Web site for the Trusts has information about the premiums and discounts at which the Trust Shares have traded.

4. The prospectus and annual report for each Trust will also include: (a) The information listed in condition 3(b) above, (i) in the case of the prospectus, for the most recently completed year (and the most recently completed quarter or quarters, as applicable), and (ii) in the case of the annual report, for the immediately preceding five years, as applicable; and (b) the following data, calculated on a per Trust Share basis for one, five and ten year periods (or life of that Trust), (i) the cumulative total return and the average annual total return based on NAV and closing price, and (ii) the cumulative total return of the relevant Benchmark Index.

5. Before a Trust may rely on the order, the Commission will have approved pursuant to rule 19b–4 under the Exchange Act, an Exchange rule requiring Exchange members and member organizations effecting transactions in Trust Shares to deliver a Product Description to purchasers of Trust Shares.

For the Commission, by the Division of Investment Management, pursuant to delegated authority.

**Florence E. Harmon,**

*Deputy Secretary.*

[FR Doc. E7–3784 Filed 3–2–07; 8:45 am]

**BILLING CODE 8010–01–P**

## SECURITIES AND EXCHANGE COMMISSION

**[Investment Company Act Release No. 27741; 812–13327]**

## Liberty All-Star Equity Fund, et al.; Notice of Application

February 27, 2007.

**AGENCY:** Securities and Exchange Commission.

**ACTION:** Notice of application for an order under section 6(c) of the Investment Company Act of 1940 (the ''Act'') for an exemption from section 15(a) of the Act.

**SUMMARY OF APPLICATION:** Applicants request an order to permit the two applicant registered closed-end investment companies to delay shareholder vote on agreements with sub-advisers (''Portfolio Managers,'' and the agreements, ''Portfolio Management Agreements'') until the next annual shareholders meeting. The order would supersede prior orders (''Prior Orders'').[1]

**APPLICANTS:** Liberty All-Star Equity Fund (the ''Equity Fund'') and Liberty All-Star Growth Fund, Inc. (the ''Growth Fund'') (collectively, the ''Funds''), and ALPS Advisers, Inc. (''ALPS Advisers'').

[1] Previous orders received by the Equity Fund (as defined below) are: *Liberty All-Star Equity Fund, et al.*, Investment Company Act Release Nos. 19436 (April 26, 1993) (notice) and 19491 (May 25, 1993) (order); Liberty *All-Star Equity Fund, et al.*, Investment Company Act Release Nos. 20347 (June 8, 1994) (notice) and 20385 (July 6, 1994) (order); and *Liberty All-Star Equity Fund, et al.*, Investment Company Act Release Nos. 22498 (February 6, 1997) (notice) and 22543 (March 4, 1997) (order). Previous orders received by the Growth Fund (as defined below) are: *The Charles Allmon Trust, Inc., et al.*, Investment Company Act Release Nos. 20772 (December 15, 1994) (notice) and 20824 (January 10, 1995) (order); and *Liberty All-Star Growth Fund, Inc., et al.*, Investment Company Act Release Nos. 22499 (February 6, 1997) (notice) and 22542 (March 4, 1997) (order).

**FILING DATES:** The application was filed on September 18, 2006, and amended on January 24, 2007. Applicants have agreed to file a final amendment during the notice period, the substance of which is reflected in this notice.

**HEARING OR NOTIFICATION OF HEARING:** An order granting the application will be issued unless the Commission orders a hearing. Interested persons may request a hearing by writing to the Commission's Secretary and serving applicants with a copy of the request, personally or by mail. Hearing requests should be received by the Commission by 5:30 p.m. on March 26, 2007, and should be accompanied by proof of service on the applicants, in the form of an affidavit, or, for lawyers, a certificate of service. Hearing requests should state the nature of the writer's interest, the reason for the request, and the issues contested. Persons who wish to be notified of a hearing may request notification by writing to the Commission's Secretary.

**ADDRESSES:** Secretary, Securities and Exchange Commission, 100 F Street, NE., Washington, DC 20549–1090. Applicants, 1625 Broadway, Suite 2200, Denver, CO 80202.

**FOR FURTHER INFORMATION CONTACT:** Christine Y. Greenlees, Senior Counsel, at (202) 551–6879, or Nadya Roytblat, Assistant Director, at (202) 551–6821 (Division of Investment Management, Office of Investment Company Regulation).

**SUPPLEMENTARY INFORMATION:** The following is a summary of the application. The complete application may be obtained for a fee at the Commission's Public Reference Desk, 100 F Street, NE., Washington, DC 20549–0102 (telephone (202) 551–5850).

*Applicants' Representations*

1. The Equity Fund, a Massachusetts business trust, and the Growth Fund, a Maryland corporation, are closed-end management investment companies registered under the Act. Each Fund's shares are currently listed and traded on the New York Stock Exchange. Each Fund holds an annual meeting of its shareholders, usually in April. ALPS Advisers, a Colorado corporation, serves as the investment adviser to the Funds and is registered as an investment adviser under the Investment Advisers Act of 1940 (the ''Advisers Act''). ALPS Advisers is a wholly owned subsidiary of ALPS Holdings, Inc. (''ALPS Holdings''), which in turn is majority owned by an institutional limited partnership controlled by Lovell Minnick Partners LLC.

2. On December 15, 2006, ALPS Advisers became the Funds' investment adviser. Previously, Banc of America Investment Advisers, Inc. (''BAIA''), formerly known as Liberty Asset Management Company, served as the Funds' investment adviser and administrator. Pursuant to an asset purchase agreement dated September 7, 2006, among BAIA, ALPS Advisers and ALPS Holdings, ALPS Advisers entered into fund management agreements (''Fund Management Agreements'') with the Funds. At a special meeting of shareholders held on November 21, 2006, Fund shareholders approved the Fund Management Agreements with ALPS Advisers, new Portfolio Management Agreements with each Portfolio Manager and a policy permitting the Funds and ALPS Advisers to enter into Portfolio Management Agreements in advance of shareholder approval.

3. Under the terms of the Fund Management Agreements, ALPS Advisers is responsible for the general management and investment of the Funds, subject to the authority of the Funds' boards of trustees/directors (each a ''Board'' and collectively, the ''Boards''). For providing services to the Funds, ALPS Advisers receives an investment advisory fee based on the average daily net assets of the Funds.

4. ALPS Advisers, on behalf of the Funds, has entered into Portfolio Management Agreements with multiple Portfolio Managers. The Equity Fund currently has five Portfolio Managers and the Growth Fund currently has three Portfolio Managers. Each Portfolio Manager is and each new Portfolio Manager will be an investment adviser that is registered under the Advisers Act. None of the existing Portfolio Managers is and no new Portfolio Manager will be an affiliated person of the Funds or ALPS Advisers other than as Portfolio Manager. ALPS Advisers will evaluate, allocate assets to, and oversee the Portfolio Managers, and make recommendations about their hiring, termination and replacement to the Board. ALPS Advisers will recommend Portfolio Managers based on a number of factors discussed in the application used to evaluate their skills in managing assets pursuant to particular investment objectives. ALPS Advisers will compensate the Portfolio Managers out of the fee paid to ALPS Advisers by the Funds.

5. Applicants request an order to permit ALPS Advisers, subject to Board approval, to change or add Portfolio Managers, or continue the services of a Portfolio Manager following an assignment of its Portfolio Management Agreement, and delay shareholder approval until the next annual shareholders meeting. Applicants state that the Prior Orders had granted BAIA, as investment adviser to the Funds, substantially identical relief.

*Applicants' Legal Analysis*

1. Section 15(a) of the Act provides, in relevant part, that it is unlawful for any person to act as an investment adviser to a registered investment company except under a written contract that has been approved by the vote of a majority of the company's outstanding voting securities.

2. Section 6(c) of the Act provides that the Commission may exempt any person, security, or transaction or any class or classes of persons, securities, or transactions from any provisions of the Act, or from any rule thereunder, if and to the extent that such exemption is necessary or appropriate in the public interest and consistent with the protection of investors and the purposes fairly intended by the policy and provisions of the Act. Applicants believe that the requested relief meets this standard for the reasons discussed below.

3. Applicants state that the Funds have operated under the Prior Orders for over 10 years. During the time that the Prior Orders have been in effect, there have been 11 Portfolio Manager changes for the Equity Fund and four changes for the Growth Fund. Applicants further state that the Portfolio Manager changes have not had any impact on premiums or discounts to net asset value at which the Funds' shares have traded, and that there is no pattern of premiums or discounts related to Portfolio Manager changes. Applicants state that Portfolio Manager changes have been frequent enough over the lives of the Funds that they are not viewed as a significant event by shareholders or in the securities markets. Applicants state that the Board and ALPS Advisers believe the ability to quickly fire and hire a Portfolio Manager have been important to the success of the Funds' investment strategy and process. Finally, applicants state that the conditions to the requested relief set forth below will address the concerns underlying section 15(a) with respect to the Portfolio Management Agreements.

*Applicants' Conditions*

Applicants agree that any order granting the requested relief will be subject to the following conditions:

1. Each Fund will hold itself out to the public as employing the multi-manager investment management structure described in the application.

Each Fund's periodic reports to shareholders will prominently disclose that ALPS Advisers has ultimate responsibility (subject to oversight by the Board) to oversee the Portfolio Managers and recommend their hiring, termination, and replacement.

2. Any new Portfolio Management Agreement with respect to a Fund will be submitted for ratification and approval to the vote of such Fund's shareholders no later than at the regularly scheduled annual meeting of shareholders of the Fund next following the effective date of the new Portfolio Management Agreement, and its continuance after such vote is conditioned on approval by the majority vote (as defined in section 2(a)(42) of the Act) of such shareholders.

3. The Funds will continue to hold annual meetings of their shareholders, whether or not required to do so by the rules of the New York Stock Exchange or otherwise.

4. At all times, at least a majority of the Board of each Fund will be trustees/directors who are not ''interested persons,'' as defined in section 2(a)(19) of the Act, of the Funds or ALPS Advisers (''Independent Trustees/Directors''), and the nomination of new or additional Independent Trustees/Directors will be at the discretion of the then existing Independent Trustees/Directors.

5. In the case of a previous Portfolio Management Agreement terminated by an assignment by an investment adviser or a controlling person of the investment adviser in connection with which assignment the investment adviser or a controlling person directly or indirectly receives money or other benefit (''Assignment''), the new Portfolio Management Agreement will comply with rule 15a–4(b)(2) under the Act. In any other case, each new Portfolio Management Agreement for a Fund will provide for a sub-advisory fee no higher than that provided in that Fund's existing Portfolio Management Agreements and, except for the provisions relating to shareholder approval referred to in Condition 2 above, will be on substantially the same other terms and conditions as such Fund's existing Portfolio Management Agreements. In all cases, in the event that the new Portfolio Management Agreement provides for sub-advisory fees at rates less than those provided in the existing Portfolio Management Agreements, the difference will be passed on to the Fund and its shareholders through a corresponding voluntary reduction in the fund management fees payable by the Fund to ALPS Advisers.

6. A Portfolio Manager will have no affiliation with the Funds or ALPS Advisers other than as Portfolio Manager, and will have no duties or responsibilities with respect to the Funds beyond the investment management of the portion of the Fund's portfolio assets allocated to it by ALPS Advisers from time to time and related record keeping and reporting.

7. The Board of each Fund, in addition to approving any new Portfolio Management Agreement in accordance with the requirements of section 15(c) of the Act, will specifically determine that entering into the new Portfolio Management Agreement in advance of the next regular annual meeting of the shareholders of the Fund and without prior shareholder approval is in furtherance of the multi-management methodology as applied to each Fund's multi-managed assets and is in the best interests of the Fund and its shareholders.

8. ALPS Advisers will have responsibility for the general management and investment of each Fund's assets, subject to oversight by the Fund's Board. In particular, ALPS Advisers will (i) provide overall investment programs and strategies for the Funds, (ii) recommend to the Fund Boards investment management firms for appointment or replacement as the Fund's Portfolio Managers, (iii) allocate and reallocate each Fund's portfolio assets among the Portfolio Managers, (iv) monitor and evaluate the investment performance of the Portfolio Managers, including their compliance with each Fund's investment objectives, policies and restrictions, and (v) implement procedures reasonably designed to ensure that the Portfolio Managers comply with each Fund's investment objectives, policies and restrictions.

9. The appointment of the new or successor Portfolio Manager will be announced by press release promptly following the Fund's Board's action referred to in Condition 7 above, and a notice of the new Portfolio Management Agreement, together with a description of the new or successor Portfolio Manager, will be included in the applicable Fund's next report to shareholders.

10. No director/trustee or officer of the Funds nor director or officer of ALPS Advisers will own directly or indirectly (other than through a pooled investment vehicle that is not controlled by such person) any interest in a Portfolio Manager, except for (a) ownership of interests in ALPS Advisers or any entity that controls, is controlled by, or is under common control with ALPS Advisers, or (b) ownership of less than 1% of the outstanding securities of any class of equity or debt of any publicly traded company that is either a Portfolio Manager or controls, is controlled by or is under common control with a Portfolio Manager.

11. In the case of an Assignment of a Fund's Portfolio Management Agreement with a Portfolio Manager, ALPS Advisers or the Portfolio Manager (or its successor) will pay the incremental cost of including the proposal to approve or disapprove the new Portfolio Management Agreement in the proxy material for the next annual meeting of the Fund's shareholders.

For the Commission, by the Division of Investment Management, under delegated authority.

**Florence E. Harmon,**

*Deputy Secretary.*

[FR Doc. E7–3772 Filed 3–2–07; 8:45 am]

**BILLING CODE 8010–01–P**

---

## SECURITIES AND EXCHANGE COMMISSION

**[Release No. 34–55348; File No. SR–Amex–2007–18]**

## Self-Regulatory Organizations; American Stock Exchange LLC; Notice of Filing and Order Granting Accelerated Approval to Proposed Rule Change and Amendment No. 1 Thereto To Provide for an Optional Exchange-Provided Fingerprinting Service and To Amend Its Member Fees To Include a Processing Fee for the Fingerprinting Service

February 26, 2007.

Pursuant to Section 19(b)(1) [1] of the Securities Exchange Act of 1934 (''Act'') and Rule 19b–4 thereunder,[2] notice is hereby given that on February 7, 2007, the American Stock Exchange LLC (''Amex'' or ''Exchange'') filed with the Securities and Exchange Commission (''Commission'') the proposed rule change as described in Items I, II, and III below, which Items have been substantially prepared by the Exchange. On February 16, 2007, Amex submitted Amendment No. 1 to the proposed rule change. This order provides notice of the proposed rule change as modified by Amendment No. 1 and approves the proposed rule change as amended on an accelerated basis.

[1] 15 U.S.C. 78s(b)(1).

[2] 17 CFR 240.19b–4.

**I. Self-Regulatory Organization's Statement of the Terms of Substance of the Proposed Rule Change**

The Exchange proposes to provide for an in-house optional fingerprinting service and to modify its Member Fees to include a fee for such fingerprinting service.[3]

The text of the proposed rule change is available at Amex, the Commission's Public Reference Room, and *http://www.amex.com.*

**II. Self-Regulatory Organization's Statement of the Purpose of, and Statutory Basis for, the Proposed Rule Change**

In its filing with the Commission, the Exchange included statements concerning the purpose of and basis for the proposed rule change and discussed any comments it received on the proposed rule change. The text of these statements may be examined at the places specified in Item III below. The Exchange has prepared summaries, set forth in sections A, B, and C below, of the most significant aspects of such statements.

*A. Self-Regulatory Organization's Statement of the Purpose of, and the Statutory Basis for, the Proposed Rule Change*

1. Purpose

The Exchange proposes to provide for an optional fingerprinting service and to amend its Member Fees to include a fee for this service for members or member applicants.[4] The Exchange intends to establish this in-house fingerprinting service to facilitate the member registration process.

A member or member applicant must currently use an external fingerprinting service to have fingerprints taken and will incur whatever costs are associated therewith. Currently, the member or member applicant must forward fingerprints to the National Association of Securities Dealers, Inc. (''NASD'') for processing and is charged a $35.00 fee[5] from NASD's Internet-based Central Registration Depository (WEB CRD). This fee includes a $13 fingerprint submission fee that is also charged for results processed through Amex.[6] NASD forwards the results to the FBI to conduct the standard criminal background check. Approximately $22.00 of the $35.00 amount is paid to the FBI for this background check. The member or member applicant also incurs any costs associated with mailing the fingerprints. The Exchange believes that this process has proven lengthy and burdensome for members and member applicants.

Furthermore, the $25.50 ''Fingerprint Processing Fee'' on the current Amex Fee Schedule is assessed when a current member simply needs his or her fingerprints submitted to the FBI for a background check. In this case, the member would need an expedited background check conducted because of a seat change or transfer. In this situation, the fingerprinting takes place in-house, and the prints are sent to the FBI by the Exchange. The results are then returned to the Exchange on an expedited basis. The member would also pay the $35.00 fee to NASD for registration with WEB CRD.[7]

To expedite the fingerprinting process, the Exchange now proposes to offer an optional in-house fingerprinting service for all members and member applicants for a $45.00 fee. Members or member applicants choosing to avail themselves of the Exchange's proposed service would have their fingerprints taken in-house. The Exchange would forward the fingerprints to the FBI in order for the FBI to conduct the background check.[8] Upon receiving the results, the Exchange would forward the results of the criminal background check to NASD. In this case, the $13.00 fingerprint submission fee would be charged for results processed through Amex.[9] The Exchange believes that collapsing the steps into one package will speed up this process and be less burdensome for members and member applicants. The Exchange notes that the current option, as well as the $25.50 option, shall continue to remain in place.

Furthermore, the Exchange proposes to include an additional footnote in the Member Fees section of the Amex Fee Schedule to note that the $45.00 fee would only be assessed on members and member applicants who partake in the Exchange's optional in-house fingerprinting service. The Exchange further proposes to correct a typographical error by deleting footnote 3 from the Examination Fees section and replacing it with the correct footnote 2.

2. Statutory Basis

The proposed rule change is consistent with Section 6(b) of the Act[10] in general, and furthers the objectives of Section 6(b)(5) of the Act[11] in particular, in that it is designed to prevent fraudulent and manipulative acts and practices, to promote just and equitable principles of trade, to remove impediments to and perfect the mechanism of a free and open market and a national market system, and, in general, to protect investors and the public interest.

*B. Self-Regulatory Organization's Statement on Burden on Competition*

The proposed rule change does not impose any burden on competition that is not necessary or appropriate in furtherance of the purposes of the Act.

*C. Self-Regulatory Organization's Statement on Comments on the Proposed Rule Change Received From Members, Participants or Others*

No written comments were solicited or received with respect to the proposed rule change.

**III. Solicitation of Comments**

Interested persons are invited to submit written data, views, and arguments concerning the foregoing, including whether the proposed rule change, as amended, is consistent with the Act. Comments may be submitted by any of the following methods:

*Electronic Comments*

- Use the Commission's Internet comment form (*http://www.sec.gov/rules/sro.shtml*); or
- Send an e-mail to *rule-comments@sec.gov.* Please include File Number SR–Amex–2007–18 on the subject line.

*Paper Comments*

- Send paper comments in triplicate to Nancy M. Morris, Secretary, Securities and Exchange Commission, 100 F Street, NE., Washington, DC 20549–1090.

All submissions should refer to File Number SR–Amex–2007–18. This file number should be included on the subject line if e-mail is used. To help the Commission process and review your

[3] Telephone conversation between Nyieri Nazarian, Assistant General Counsel, Amex, and Cyndi N. Rodriguez, Special Counsel, Division of Market Regulation, Commission, on February 23, 2007.

[4] *Id.*

[5] *See* Footnote 4 to the Exchange's Registration and IDC Fees Section of the Amex Fee Schedule.

[6] *See* Section 4 of Schedule A to the NASD By-Laws.

[7] As the Exchange clarified in Amendment No. 1, when a member pays the $25.50 fingerprint fee, he or she has his or her fingerprints taken in-house and must also pay a $35.00 fee to NASD for registration with WEB CRD. *See* Amendment No. 1.

[8] $22.00 out of the $45.00 amount would be paid to the FBI.

[9] NASD would collect this $13.00 fee. The Exchange clarified in Amendment No. 1 that members or member applicants opting to have their fingerprints taken in-house under the proposed new program would pay a $45.00 fee as well as the $13.00 fee to WEB CRD. *See* Amendment No. 1.

[10] 15 U.S.C. 78f(b).

[11] 15 U.S.C. 78f(b)(5).

comments more efficiently, please use only one method. The Commission will post all comments on the Commission's Internet Web site (*http://www.sec.gov/rules/sro.shtml*). Copies of the submission, all subsequent amendments, all written statements with respect to the proposed rule change that are filed with the Commission, and all written communications relating to the proposed rule change between the Commission and any person, other than those that may be withheld from the public in accordance with the provisions of 5 U.S.C. 552, will be available for inspection and copying in the Commission's Public Reference Room. Copies of such filing also will be available for inspection and copying at the principal office of Amex. All comments received will be posted without change; the Commission does not edit personal identifying information from submissions. You should submit only information that you wish to make available publicly. All submissions should refer to File Number SR–Amex–2007–18 and should be submitted on or before March 26, 2007.

## IV. Commission's Findings and Order Granting Accelerated Approval of the Proposed Rule Change

The Commission finds that the proposed rule change is consistent with the requirements of the Act and the rules and regulations thereunder applicable to a national securities exchange.[12] In particular, the Commission finds that the proposed rule change is consistent with Section 6(b)(5) of the Act,[13] which requires, among other things, that the Exchange's rules be designed to prevent fraudulent and manipulative acts and practices, to promote just and equitable principles of trade, to foster cooperation and coordination with persons engaged in regulating, clearing, settling, processing information with respect to, and facilitating transactions in securities, to remove impediments to and perfect the mechanism of a free and open market and a national market system, and, in general, to protect investors and the public interest.

The Commission believes that offering an optional in-house fingerprinting service may provide Exchange members and member applicants with an expedited and less burdensome alternative for obtaining and processing their fingerprints at the Exchange as part of the Exchange's registration process. The Commission further believes that the additional changes to the Exchange's Member Fees schedule serve to clarify the fees associated with the Exchange's new fingerprinting service.

Accelerated Approval

The Commission finds good cause, consistent with Section 19(b)(2) of the Act,[14] for approving this proposed rule change, as amended, before the thirtieth day after the publication of notice thereof in the **Federal Register** because it would enable the Exchange to implement the optional in-house fingerprinting service immediately, providing members and member applicants another way to be fingerprinted.

## V. Conclusion

*It is therefore ordered*, pursuant to Section 19(b)(2) of the Act,[15] that the proposed rule change (SR–Amex–2007–18), as modified by Amendment No. 1, be, and it hereby is, approved on an accelerated basis.

For the Commission, by the Division of Market Regulation, pursuant to delegated authority.[16]

**Florence E. Harmon,**

*Deputy Secretary.*

[FR Doc. E7–3746 Filed 3–2–07; 8:45 am]

BILLING CODE 8010–01–P

[12] In approving this proposal, the Commission has considered its impact on efficiency, competition, and capital formation. *See* 15 U.S.C. 78c(f).

[13] 15 U.S.C. 78f(b)(5).

[14] 15 U.S.C. 78s(b)(2).

[15] 15 U.S.C. 78s(b)(2).

[16] 17 CFR 200.30–3(a)(12).

---

## SECURITIES AND EXCHANGE COMMISSION

**[Release No. 34–55357; File No. SR–CBOE–2007–16]**

## Self-Regulatory Organizations; Chicago Board Options Exchange, Incorporated; Notice of Filing and Immediate Effectiveness of Proposed Rule Change Relating to an Extension of the Dividend, Merger and Short Stock Interest Strategies Fee Cap Pilot Program

February 27, 2007.

Pursuant to Section 19(b)(1) of the Securities Exchange Act of 1934 (''Act'')[1] and Rule 19b–4 thereunder,[2] notice is hereby given that on February 14, 2007, the Chicago Board Options Exchange, Incorporated (''CBOE'' or ''Exchange'') filed with the Securities and Exchange Commission (''Commission'') the proposed rule change as described in Items I, II, and III below, which Items have been substantially prepared by the Exchange. CBOE has designated this proposal as one establishing or changing a due, fee, or other charge imposed by a self-regulatory organization pursuant to Section 19(b)(3)(A)(ii) of the Act[3] and Rule 19b–4(f)(2) thereunder,[4] which renders the proposal effective upon filing with the Commission. The Commission is publishing this notice to solicit comments on the proposed rule change from interested persons.

### I. Self-Regulatory Organization's Statement of the Terms of Substance of the Proposed Rule Change

CBOE proposes to amend its Fees Schedule to extend until March 1, 2008,[5] the dividend, merger, and short stock interest strategies fee cap program.

The text of the proposed rule change is available on the Exchange's Web site (*http://www.cboe.org/Legal/SubmittedSECFilings.aspx*), at the Exchange's principal office, and at the Commission's Public Reference Room.

### II. Self-Regulatory Organization's Statement of the Purpose of, and Statutory Basis for, the Proposed Rule Change

In its filing with the Commission, the Exchange included statements concerning the purpose of, and basis for, the proposed rule change and discussed any comments it received on the proposed rule change. The text of these statements may be examined at the places specified in Item IV below. The Exchange has prepared summaries, set forth in Sections A, B, and C below, of the most significant aspects of such statements.

*A. Self-Regulatory Organization's Statement of the Purpose of, and Statutory Basis for, the Proposed Rule Change*

1. Purpose

The Exchange currently caps market-maker, firm, and broker-dealer transaction fees associated with dividend, merger, and short stock interest strategies, as described in Footnote 13 of the CBOE Fees Schedule (''Strategy Fee Cap''). The Strategy Fee Cap is in effect as a pilot program that is due to expire on March 1, 2007.

The Exchange proposes to extend the Strategy Fee Cap program until March 1, 2008. No other changes are proposed.

[1] 15 U.S.C. 78s(b)(1).

[2] 17 CFR 240.19b–4.

[3] 15 U.S.C. 78s(b)(3)(A)(ii).

[4] 17 CFR 240.19b–4(f)(2).

[5] Telephone conversation between Jaime Galvan, Senior Attorney, CBOE, and Leah Mesfin, Special Counsel, Division of Market Regulation, Commission, on February 26, 2007.

The Exchange believes that extension of the Strategy Fee Cap program should attract additional liquidity and permit the Exchange to remain competitive for these types of strategies.

2. Statutory Basis

The proposed rule change is consistent with Section 6(b) of the Act,[6] in general, and furthers the objectives of Section 6(b)(4),[7] in particular, in that it is designed to provide for the equitable allocation of reasonable dues, fees, and other charges among its members and issuers and other persons using facilities.

*B. Self-Regulatory Organization's Statement on Burden on Competition*

CBOE does not believe that the proposed rule change will impose any burden on competition that is not necessary or appropriate in furtherance of the purposes of the Act.

*C. Self-Regulatory Organization's Statement on Comments on the Proposed Rule Change Received From Members, Participants or Others*

No written comments were solicited or received with respect to the proposed rule change.

**III. Date of Effectiveness of the Proposed Rule Change and Timing for Commission Action**

The foregoing proposed rule change has become effective pursuant to Section 19(b)(3)(A)(ii) of the Act[8] and Rule 19b–4(f)(2) thereunder[9] because it establishes or changes a due, fee, or other charge imposed by the Exchange. At any time within 60 days of the filing of the proposed rule change, the Commission may summarily abrogate such rule change if it appears to the Commission that such action is necessary or appropriate in the public interest, for the protection of investors, or otherwise in furtherance of the purposes of the Act.

**IV. Solicitation of Comments**

Interested persons are invited to submit written data, views, and arguments concerning the foregoing, including whether the proposed rule change is consistent with the Act. Comments may be submitted by any of the following methods:

*Electronic Comments*

- Use the Commission's Internet comment form (*http://www.sec.gov/rules/sro.shtml*); or
- Send an e-mail to *rule-comments@sec.gov.* Please include File No. SR–CBOE–2007–16 on the subject line.

*Paper Comments*

- Send paper comments in triplicate to Nancy M. Morris, Secretary, Securities and Exchange Commission, Station Place, 100 F Street, NE., Washington, DC 20549–1090.

All submissions should refer to File Number SR–CBOE–2007–16. This file number should be included on the subject line if e-mail is used. To help the Commission process and review your comments more efficiently, please use only one method. The Commission will post all comments on the Commissions Internet Web site (*http://www.sec.gov/rules/sro.shtml*). Copies of the submission, all subsequent amendments, all written statements with respect to the proposed rule change that are filed with the Commission, and all written communications relating to the proposed rule change between the Commission and any person, other than those that may be withheld from the public in accordance with the provisions of 5 U.S.C. 552, will be available for inspection and copying in the Commission's Public Reference Room. Copies of the filing also will be available for inspection and copying at the principal office of CBOE. All comments received will be posted without change; the Commission does not edit personal identifying information from submissions. You should submit only information that you wish to make available publicly. All submissions should refer to File Number SR–CBOE–2007–16 and should be submitted on or before March 26, 2007.

For the Commission, by the Division of Market Regulation, pursuant to delegated authority.[10]

**Florence E. Harmon,**

*Deputy Secretary.*

[FR Doc. E7–3752 Filed 3–2–07; 8:45 am]

BILLING CODE 8010–01–P

[6] 15 U.S.C. 78f(b).

[7] 15 U.S.C. 78f(b)(4).

[8] 15 U.S.C. 78s(b)(3)(A)(ii).

[9] 17 CFR 19b–4(f)(2).

[10] 17 CFR 200.30–3(a)(12).

## SECURITIES AND EXCHANGE COMMISSION

**[Release No. 34–55334; File No. SR–CHX–2007–03]**

## Self-Regulatory Organizations; Chicago Stock Exchange, Inc.; Notice of Filing and Immediate Effectiveness of Proposed Rule Change Regarding a Change to the Trading Phase Date

February 23, 2007.

Pursuant to Section 19(b)(1) of the Securities Exchange Act of 1934 (''Act'')[1] and Rule 19b–4 thereunder,[2] notice is hereby given that on February 2, 2007, the Chicago Stock Exchange, Inc. (''CHX'' or ''Exchange'') filed with the Securities and Exchange Commission (''Commission'') the proposed rule change as described in Items I and II below, which Items have been substantially prepared by CHX. The Exchange has filed the proposal as a ''non-controversial'' rule change pursuant to Section 19(b)(3)(A) of the Act[3] and Rule 19b–4(f)(6) thereunder,[4] which renders it effective upon filing with the Commission. The Commission is publishing this notice to solicit comments on the proposed rule change from interested persons.

**I. Self-Regulatory Organization's Statement of the Terms of Substance of the Proposed Rule Change**

The Exchange proposes to amend its rules to change the definition of the Regulation NMS ''Trading Phase Date'' from February 5, 2007 to March 5, 2007. The text of the proposed rule change is available at CHX, the Commission's Public Reference Room, and *http://www.chx.com/rules/proposed_rules.htm.*

**II. Self-Regulatory Organization's Statement of the Purpose of, and Statutory Basis for, the Proposed Rule Change**

In its filing with the Commission, CHX included statements concerning the purpose of and basis for the proposed rule change and discussed any comments it received on the proposed rule change. The text of these statements may be examined at the places specified in Item IV below. CHX has prepared summaries, set forth in Sections A, B, and C below, of the most significant aspects of such statements.

[1] 15 U.S.C. 78s(b)(1).

[2] 17 CFR 240.19b–4.

[3] 15 U.S.C. 78s(b)(3)(A).

[4] 17 CFR 240.19b–4(f)(6).

*A. Self-Regulatory Organization's Statement of the Purpose of, and Statutory Basis for, the Proposed Rule Change*

1. Purpose

The Exchange's rules currently define the Trading Phase Date as February 5, 2007.[5] The Trading Phase Date is the final date for the full operation of Regulation NMS-compliant trading systems of automated trading centers that intend to qualify their quotations for trade-through protection during the Regulation NMS roll-out. On January 24, 2007, the Commission extended the Trading Phase Date from February 5, 2007 to March 5, 2007.[6] Through this filing, the Exchange would change its rules to reflect the March 5, 2007 date.

2. Statutory Basis

CHX believes the proposal is consistent with the requirements of the Act and the rules and regulations thereunder that are applicable to a national securities exchange, and, in particular, with the requirements of Section 6(b) of the Act.[7] The Exchange believes that the proposal is consistent with Section 6(b)(5) of the Act,[8] because it is designed to promote just and equitable principles of trade, to remove impediments to and perfect the mechanism of a free and open market and a national market system, and, in general, to protect investors and the public interest by allowing CHX to amend its rules to reflect the recently-approved change in the Trading Phase Date.

*B. Self-Regulatory Organization's Statement on Burden on Competition*

The Exchange does not believe that the proposed rule change will impose any burden on competition that is not necessary or appropriate in furtherance of the purposes of the Act.

*C. Self-Regulatory Organization's Statement on Comments on the Proposed Rule Change Received From Members, Participants or Others*

No written comments were either solicited or received.

## III. Date of Effectiveness of the Proposed Rule Change and Timing for Commission Action

Because the forgoing rule change does not: (1) Significantly affect the protection of investors or the public interest; (2) impose any significant burden on competition; and (3) become operative for 30 days after the date of this filing, or such shorter time as the Commission may designate, it has become effective pursuant to section 19(b)(3)(A) of the Act[9] and Rule 19b–4(f)(6) thereunder.[10]

A proposed rule change filed under 19b–4(f)(6) normally may not become operative prior to 30 days after the date of filing.[11] However, Rule 19b–4(f)(6)(iii)[12] permits the Commission to designate a shorter time if such action is consistent with the protection of investors and the public interest. The Exchange has requested that the Commission waive the 30-day operative delay. The Commission believes that waiving the 30-day operative delay is consistent with the protection of investors and the public interest because such waiver would permit the Exchange to immediately update its rules to reflect that the Trading Phase Date has been changed to March 5, 2007. For this reason, the Commission designates the proposed rule change to be operative upon filing with the Commission.[13]

At any time within 60 days of the filing of such proposed rule change the Commission may summarily abrogate such rule change if it appears to the Commission that such action is necessary or appropriate in the public interest, for the protection of investors or otherwise in furtherance of the purposes of the Act.

## IV. Solicitation of Comments

Interested persons are invited to submit written data, views, and arguments concerning the foregoing, including whether the proposed rule change is consistent with the Act. Comments may be submitted by any of the following methods:

*Electronic Comments*

- Use the Commission's Internet comment form (*http://www.sec.gov/rules/sro.shtml*); or
- Send an e-mail to *rule-comments@sec.gov.* Please include File Number SR–CHX–2007–03 on the subject line.

*Paper Comments*

- Send paper comments in triplicate to Nancy M. Morris, Secretary, Securities and Exchange Commission, 100 F Street, NE., Washington, DC 20549–1090.

All submissions should refer to File Number SR–CHX–2007–03. This file number should be included on the subject line if e-mail is used. To help the Commission process and review your comments more efficiently, please use only one method. The Commission will post all comments on the Commission's Internet Web site (*http://www.sec.gov/rules/sro.shtml*). Copies of the submission, all subsequent amendments, all written statements with respect to the proposed rule change that are filed with the Commission, and all written communications relating to the proposed rule change between the Commission and any person, other than those that may be withheld from the public in accordance with the provisions of 5 U.S.C. 552, will be available for inspection and copying in the Commission's Public Reference Room. Copies of the filing also will be available for inspection and copying at the principal office of CHX. All comments received will be posted without change; the Commission does not edit personal identifying information from submissions. You should submit only information that you wish to make available publicly. All submissions should refer to File Number SR–CHX–2007–03 and should be submitted on or before March 26, 2007.

For the Commission, by the Division of Market Regulation, pursuant to delegated authority.[14]

**Florence E. Harmon,**

*Deputy Secretary.*

[FR Doc. E7–3753 Filed 3–2–07; 8:45 am]

**BILLING CODE 8010–01–P**

[5] Several of the Exchange's order types (including, but not limited to, its various types of intermarket sweep orders) are not available until the Trading Phase Date.

[6] *See* Securities Exchange Act Release No. 55160 (January 24, 2007), 72 FR 4202 (January 30, 2007).

[7] 15 U.S.C. 78f(b).

[8] 15 U.S.C. 78f(b)(5).

[9] 15 U.S.C. 78s(b)(3)(A).

[10] 17 CFR 240.19b–4(f)(6).

[11] 17 CFR 240.19b–4(f)(6)(iii). In addition, Rule 19b–4(f)(6)(iii) requires that a self-regulatory organization submit to the Commission written notice of its intent to file the proposed rule change, along with a brief description and text of the proposed rule change, at least five business days prior to the date of filing of the proposed rule change, or such shorter time as designated by the Commission. CHX has satisfied the five-day pre-filing notice requirement.

[12] *Id.*

[13] For the purposes only of waiving the 30-day operative delay, the Commission has considered the proposed rule's impact on efficiency, competition, and capital formation. *See* 15 U.S.C. 78c(f).

[14] 17 CFR 200.30–3(a)(12).

## SECURITIES AND EXCHANGE COMMISSION

**[Release No. 34–55344; File No. SR–NASDAQ–2006–057]**

## Self-Regulatory Organizations; The NASDAQ Stock Market LLC; Notice of Filing and Order Granting Accelerated Approval of Proposed Rule Change as Modified by Amendment No. 2 Thereto To Trade Certain CurrencyShares Trusts Pursuant to Unlisted Trading Privileges

February 23, 2007.

Pursuant to Section l9(b)(1) of the Securities Exchange Act of 1934 (''Act'') [1] and Rule 19b–4 thereunder,[2] notice is hereby given that on December 12, 2006, The NASDAQ Stock Market LLC (''Nasdaq'') filed with the Securities and Exchange Commission (''Commission'') the proposed rule change as described in Items I, II, and III below, which Items have been substantially prepared by Nasdaq. On January 29, 2007, Nasdaq filed Amendment No. 1 to the proposed rule change. On February 16, 2007, Nasdaq filed Amendment No. 2 to the proposed rule change.[3] This order provides notice of the proposed rule change, as amended, and approves the proposal on an accelerated basis.

### I. Self-Regulatory Organization's Statement of the Terms of the Substance of the Proposed Rule Change

Nasdaq seeks to continue trading pursuant to unlisted trading privileges (''UTP'') certain securities whose value is linked to the value of one or more non-U.S. currencies (''Currency Trust Shares''). The securities consist of shares (''Shares'') in the following currency trusts (''Trusts''):

- CurrencyShares™ Australian Dollar Trust, which issues Australian Dollar Shares;
- CurrencyShares™ British Pound Sterling Trust, which issues British Pound Sterling Shares;
- CurrencyShares™ Canadian Dollar Trust, which issues Canadian Dollar Shares;
- CurrencyShares™ Euro Trust, which issues Euro Shares;
- CurrencyShares™ Japanese Yen Trust, which issues Japanese Yen Shares;
- CurrencyShares™ Mexican Peso Trust, which issues Mexican Peso Shares;
- CurrencyShares™ Swedish Krona Trust, which issues Swedish Krona Shares; and
- CurrencyShares™ Swiss Franc Trust, which issues Swiss Franc Shares.

The text of the proposed rule change is available on Nasdaq's Web site at *http://nasdaq.complinet.com*, at Nasdaq's principal office, and at the Commission's Public Reference Room.

### II. Self Regulatory Organization's Statement of the Purpose of and Statutory Basis for, the Proposed Rule Change

In its filing with the Commission, Nasdaq included statements concerning the purpose of and basis for the proposed rule change and discussed any comments it received on the proposed rule change. The text of these statements may be examined at the places specified in Item III below. Nasdaq has prepared summaries, set forth in Sections A, B, and C below, of the most significant aspects of such statements.

*A. Self-Regulatory Organization's Statement of the Purpose of, and Statutory Basis for the Proposed Rule Change*

1. Purpose

Nasdaq is proposing to trade the Shares on a UTP basis. Nasdaq is submitting this filing because its current listing standards do not extend to Currency Trust Shares. However, systems operated by Nasdaq and its affiliates currently trade the Shares on an over-the-counter basis as facilities of NASD. The filing will allow Nasdaq to continue trading the Shares as an exchange.

The Commission previously approved the original listing and trading of the Shares on the New York Stock Exchange (''NYSE'').[4]

The Australian Dollar Shares represent units of fractional undivided beneficial interest in and ownership of the Australian Dollar Trust. The investment objective of the Australian Dollar Trust is for the Australian Dollar Shares to reflect the price of the Australian dollar.

The British Pound Sterling Shares represent units of fractional undivided beneficial interest in and ownership of the British Pound Sterling Trust. The investment objective of the British Pound Sterling Trust is for the British Pound Sterling Shares to reflect the price of the British pound.

The Canadian Dollar Shares represent units of fractional undivided beneficial interest in and ownership of the Canadian Dollar Trust. The investment objective of the Canadian Dollar Trust is for the Canadian Dollar Shares to reflect the price of the Canadian dollar.

The Euro Shares represent units of fractional undivided beneficial interest in and ownership of the Euro Trust. The investment objective of the Euro Trust is for the Euro Shares to reflect the price of the euro.

The Japanese Yen Shares represent units of fractional undivided beneficial interest in and ownership of the Japanese Yen Trust. The investment objective of the Japanese Yen Trust is for the Japanese Yen Shares to reflect the price of the Japanese yen.

The Mexican Peso Shares represent units of fractional undivided beneficial interest in and ownership of the Mexican Peso Trust. The investment objective of the Mexican Peso Trust is for the Mexican Peso Shares to reflect the price of the Mexican peso.

The Swedish Krona Shares represent units of fractional undivided beneficial interest in and ownership of the Swedish Krona Trust. The investment objective of the Swedish Krona Trust is for the Swedish Krona Shares to reflect the price of the Swedish krona.

The Swiss Franc Shares represent units of fractional undivided beneficial interest in and ownership of the Swiss Franc Trust. The investment objective of the Swiss Franc Trust is for the Swiss Franc Shares to reflect the price of the Swiss franc.

The Trusts are not registered investment companies under the Investment Company Act of 1940. Nasdaq deems the Shares to be equity securities, thus rendering trading in the Shares subject to Nasdaq's existing rules governing the trading of equity securities, including Nasdaq Rule 4630.[5] The primary trading hours for the Shares on Nasdaq would be 9:30 a.m. to 4:15 p.m. (EST). The Shares may also be traded in a pre-market session from 7 a.m. to 9:30 a.m. (EST) and a post-

[1] 15 U.S.C. 78s(b)(l).

[2] 17 CFR 240.19b–4.

[3] Amendment No. 2 superceded the original filing and Amendment No. 1.

[4] Securities Exchange Act Release No. 55268 (February 9, 2007), 72 FR 7793 (February 20, 2007) (SR–NYSE–2007–03) (approving listing and trading of Japanese Yen Shares); Securities Exchange Act Release No. 52843 (November 28, 2005), 70 FR 72486 (December 5, 2005) (SR–NYSE–2005–65) (approving listing and trading of Euro Shares); Securities Exchange Act Release No. 54020 (June 20, 2006), 71 FR 36579 (June 27, 2006) (SR–NYSE–2006–35) (approving listing and trading of the six additional CurrencyShares Trusts).

[5] On November 16, 2006, the Commission approved a rule filing by Nasdaq to adopt Rule 4630, a new rule governing the trading of and surveillance procedures applicable to Commodity-Based Trust Shares. *See* Securities Exchange Act Release No. 54765 (November 16, 2006), 71 FR 67668 (November 22, 2006) (SR–NASDAQ–2006–009). Because foreign currency is included within the rule's definition of a commodity, Rule 4630 is applicable to Currency Trust Shares.

market session from 4:15 p.m. to 8 p.m. (EST).

Quotations for and last sale information regarding the Shares is disseminated through the Consolidated Tape System. The net asset value (''NAV'') and NAV per Share for each Trust are calculated by The Bank of New York as the Trustee for each Trust. To calculate the NAV, the Trustee adds the total value of Trust assets, including accrued receivables, and then subtracts Trust liabilities, including accrued expenses. The Trustee determines the NAV per Share by dividing the NAV of a Trust by the number of outstanding Shares. The NAV per Share is published on the Trusts' Web site at *http://www.currencyshares.com* (to which Nasdaq would provide a link from its *http://www.nasdaq.com* Web site). The Trusts' Web site is publicly accessible at no charge and also contains the spot price for each applicable foreign currency, including the bid and offer and the midpoint between the bid and offer for the foreign currency spot price, updated at least every 15 seconds; an intraday indicative value (''IIV'')[6] per Share calculated by multiplying the indicative spot price of the currency by the quantity of the currency backing each Share, at least every 15 seconds, and for certain Shares on a five-to ten-second delayed basis; and other pertinent information about the value of a Share.[7]

Nasdaq would halt trading in the Shares of a Trust under the conditions specified in Nasdaq Rules 4120 and 4121. The conditions for a halt include a regulatory halt by the listing market. UTP trading in the Shares also would be governed by provisions of Nasdaq Rule 4120 relating to temporary interruptions in the calculation or wide dissemination of the IIV.[8]

Nasdaq believes that its surveillance procedures are adequate to address any concerns about the trading of the Shares on Nasdaq. Trading of the Shares through NASD facilities operated by Nasdaq is currently subject to NASD's surveillance procedures for equity securities in general and ETFs in particular. After Nasdaq begins to trade the Shares as an exchange, NASD, on behalf of Nasdaq, will continue to surveil Nasdaq's trading of the Shares. Nasdaq's transition to trading the Shares as an exchange will not result in any change in the surveillance process with respect to the Shares.[9]

In connection with trading the Shares as an exchange, Nasdaq will issue an information circular (''Circular'') that will discuss the following: (1) The special characteristics and risks of trading the Shares; (2) the procedures for purchases and redemptions of Shares; (3) applicable Nasdaq rules including suitability rules; (4) how information regarding the IIV is disseminated; and (5) trading information. The Circular will also refer members to language in the Registration Statements regarding prospectus delivery requirements for the Shares, and note to members their obligations regarding prospectus delivery. Nasdaq notes that investors purchasing Shares directly from the Trusts will receive a prospectus. Nasdaq members purchasing Shares from the Trusts for resale to investors will deliver a prospectus to such investors.

In addition, the Circular will reference that the Trusts are subject to various fees and expenses described in the Registration Statements. The Circular will explain that if the Trusts are required to sell currency to pay the Trusts' expenses, the amount of foreign currency required to create a basket of Shares issued by the Trusts or to be delivered upon a redemption of a basket of Shares may gradually decrease over time. If this is done when the price of the currency is relatively low, the selling of the currency could adversely affect the value of the Shares. Finally, the Circular will also reference the fact that there is no regulated source of last-sale information regarding currency and that the Commission has no jurisdiction over the trading of currency.

2. Statutory Basis

Nasdaq believes that the proposal is consistent with the provisions of Section 6 of the Act,[10] in general, and with Section 6(b)(5) of the Act,[11] in particular, in that it is designed to prevent fraudulent and manipulative acts and practices, to promote just and equitable principles of trade, to remove impediments to a free and open market and a national market system, and, in general, to protect investors and the public interest.

In addition, Nasdaq believes that the proposal is consistent with Rule 12f–5 under the Act[12] because it deems the Shares to be equity securities, thus rendering trading in the Shares subject to Nasdaq's rules governing the trading of equity securities.

*B. Self-Regulatory Organization's Statement on Burden on Competition*

Nasdaq does not believe that the proposed rule change would impose any burden on competition that is not necessary or appropriate in furtherance of the purposes of the Act.

*C. Self Regulatory Organization's Statement on Comments on the Proposed Rule Change Received From Members, Participants, or Others*

Written comments on the proposal were neither solicited nor received.

**III. Solicitation of Comments**

Interested persons are invited to submit written data, views, and arguments concerning the foregoing, including whether the proposed rule change is consistent with the Act. Comments may be submitted by any of the following methods:

*Electronic Comments*

- Use the Commission's Internet comment form (*http://www.sec.gov/rules/sro.shtml*); or
- Send an e-mail to *rule-comments@sec.gov*. Please include File Number SR–NASDAQ–2006–057 on the subject line.

*Paper Comments*

- Send paper comments in triplicate to Nancy M. Morris, Secretary, Securities and Exchange Commission, 100 F Street, NE., Washington, DC 20549–1090.

All submissions should refer to File Number SR–NASDAQ–2006–057. This file number should be included on the subject line if e-mail is used. To help the Commission process and review your

[6] The IIV of the Shares is analogous to the intraday optimized portfolio value (sometimes referred to as the IOPV), indicative portfolio value, or IIV associated with the trading of exchange-traded funds.

[7] The Trusts' Web site's foreign currency spot price is provided by FactSet Research Systems (*http://www.factset.com*). Nasdaq would provide a link to the Trusts' Web site. The NYSE has stated that FactSet Research Systems is not affiliated with the Trusts, their Trustee, their sponsor, other entities involved in distributing or holding deposits associated with the Trusts, or the NYSE. In the event that the Trusts' Web site should cease to provide currency spot price information from an unaffiliated source and the IIV of the Shares, NYSE has stated that it would halt trading in the Shares and commence delisting proceedings for the Shares. Nasdaq would also halt trading in the Shares in the event that NYSE halts trading because the spot price and/or IIV is no longer available, or if NYSE delists the Shares for other reasons.

[8] *See* Securities Exchange Act Release No. 55269 (February 9, 2007), 72 FR 7490 (February 15, 2007) (SR–NASDAQ–2006–050).

[9] Surveillance of all trading on NASD facilities operated by Nasdaq, including the trading of Shares, is currently being conducted by NASD. When Nasdaq begins to trade the Shares as an exchange, NASD will surveil trading pursuant to a regulatory services agreement. Nasdaq is responsible for NASD's performance under this regulatory services agreement.

[10] 15 U.S.C. 78f.

[11] 15 U.S.C. 78f(b)(5).

[12] 17 CFR 240.12f–5.

comments more efficiently, please use only one method. The Commission will post all comments on the Commission's Internet Web site (*http://www.sec.gov/rules/sro.shtml*). Copies of the submission, all subsequent amendments, all written statements with respect to the proposed rule change that are filed with the Commission, and all written communications relating to the proposed rule change between the Commission and any person, other than those that may be withheld from the public in accordance with the provisions of 5 U.S.C. 552, will be available for inspection and copying in the Commission's Public Reference Room. Copies of such filing also will be available for inspection and copying at the principal office of Nasdaq. All comments received will be posted without change; the Commission does not edit personal identifying information from submissions. You should submit only information that you wish to make available publicly. All submissions should refer to File Number SR–NASDAQ–2006–057 and should be submitted on or before March 26, 2007.

## IV. Commission's Findings and Order Granting Accelerated Approval of the Proposed Rule Change

After careful review, the Commission finds that the proposed rule change, as amended, is consistent with the requirements of the Act and the rules and regulations thereunder applicable to a national securities exchange.[13] In particular, the Commission finds that the proposed rule change is consistent with Section 6(b)(5) of the Act,[14] which requires that an exchange have rules designed, among other things, to promote just and equitable principles of trade, to remove impediments to and perfect the mechanism of a free and open market and a national market system, and in general to protect investors and the public interest. The Commission believes that this proposal should benefit investors by increasing competition among markets that trade the Shares.

In addition, the Commission finds that the proposal is consistent with Section 12(f) of the Act,[15] which permits an exchange to trade, pursuant to UTP, a security that is listed and registered on another exchange.[16] The Commission notes that it previously approved the listing and trading of the Shares on NYSE.[17] The Commission also finds that the proposal is consistent with Rule 12f–5 under the Act,[18] which provides that an exchange shall not extend UTP to a security unless the exchange has in effect a rule or rules providing for transactions in the class or type of security to which the exchange extends UTP. Nasdaq has represented that it meets this requirement because it deems the Shares to be equity securities, thus rendering trading in the Shares subject to the Nasdaq's existing rules governing the trading of equity securities.

The Commission further believes that the proposal is consistent with Section 11A(a)(1)(C)(iii) of the Act,[19] which sets forth Congress' finding that it is in the public interest and appropriate for the protection of investors and the maintenance of fair and orderly markets to assure the availability to brokers, dealers, and investors of information with respect to quotations for and transactions in securities. Quotations for and last sale information regarding the Shares are disseminated through the facilities of the Consolidated Tape Association. Furthermore, the Trusts' Web site, which is publicly accessible at no charge, provides the IIV at least every 15 seconds, and for certain Shares on a five-second to ten-second delayed basis, throughout Nasdaq's trading sessions. In addition, Nasdaq has represented that, if the listing market halts trading when the IIV is not being calculated or disseminated, Nasdaq would halt trading in the Shares. Nasdaq would follow the procedures with respect to trading halts set forth in Nasdaq Rules 4120 and 4122.

The Commission notes that, if the Shares should be delisted by the listing exchange, the Nasdaq would no longer have authority to trade the Shares pursuant to this order.

In support of this proposal, the Nasdaq has made the following representations:

1. Nasdaq's surveillance procedures are adequate to address any concerns about the trading of the Shares on Nasdaq.

2. Nasdaq will issue an information circular that will discuss the special characteristics and risks of trading the Shares, the procedures for the purchases and redemptions of the Shares, applicable Nasdaq rules including suitability rules, how information regarding the IIV is disseminated, and trading information.

3. In connection with trading the Shares as an exchange, Nasdaq will issue an information circular that will refer members to the language in the Registration Statements regarding prospectus delivery requirements for the Shares and will also note to Nasdaq members their obligations regarding prospectus delivery. Investors purchasing Shares directly from the Trusts will receive a prospectus. In addition, Nasdaq members purchasing Shares from the Trust for resale to investors will deliver a prospectus to such investors.

This approval order is conditioned on the Nasdaq's adherence to these representations.

The Commission finds good cause for approving this proposal before the thirtieth day after the publication of notice thereof in the **Federal Register**. As noted previously, the Commission previously found that the listing and trading of the Shares on NYSE is consistent with the Act. The Commission presently is not aware of any regulatory issue that should cause it to revisit that finding or would preclude the trading of the Shares on Nasdaq pursuant to UTP. Therefore, accelerating approval of this proposal should benefit investors by creating, without undue delay, additional competition in the market for the Shares.

## V. Conclusion

*It is therefore ordered*, pursuant to Section 19(b)(2) of the Act,[20] that the proposed rule change (SR–NASDAQ–2006–057), as amended, be and it hereby is, approved on an accelerated basis.

For the Commission, by the Division of Market Regulation, pursuant to delegated authority.[21]

**Florence E. Harmon,**

*Deputy Secretary.*

[FR Doc. E7–3742 Filed 3–2–07; 8:45 am]

**BILLING CODE 8010–01–P**

[13] In approving this rule change, the Commission notes that it has considered the proposal's impact on efficiency, competition, and capital formation. *See* 15 U.S.C. 78c(f).

[14] 15 U.S.C. 78f(b)(5).

[15] 15 U.S.C. 78*l*(f).

[16] Section 12(a) of the Act, 15 U.S.C. 78*l*(a), generally prohibits a broker-dealer from trading a security on a national securities exchange unless the security is registered on that exchange pursuant to Section 12 of the Act. Section 12(f) of the Act excludes from this restriction trading in any security to which an exchange ''extends UTP.'' When an exchange extends UTP to a security, it allows its members to trade the security as if it were listed and registered on the exchange even though it is not so listed and registered.

[17] *See supra* note 4.

[18] 17 CFR 240.12f–5.

[19] 15 U.S.C. 78k–1(a)(1)(C)(iii).

[20] 15 U.S.C. 78s(b)(2).

[21] 17 CFR 200.30–3(a)(12).

## SECURITIES AND EXCHANGE COMMISSION

**[Release No. 34–55353; File No. SR–NASDAQ–2007–011]**

## Self-Regulatory Organizations; The NASDAQ Stock Market LLC; Notice of Filing and Order Granting Accelerated Approval of Proposed Rule Change To Permit Trading Pursuant to Unlisted Trading Privileges of Shares of 93 Funds of the Proshares Trust

February 26, 2007.

Pursuant to Section 19(b)(1) of the Securities Exchange Act of 1934 (''Act'') [1] and Rule 19b–4 thereunder,[2] notice is hereby given that on February 21, 2007, The NASDAQ Stock Market LLC (''Nasdaq'' or ''Exchange'') filed with the Securities and Exchange Commission (''Commission'') the proposed rule change as described in Items I and II below, which Items have been substantially prepared by the Exchange. This order provides notice of the proposed rule change and approves the proposal on an accelerated basis.

### I. Self-Regulatory Organization's Statement of the Terms of Substance of the Proposed Rule Change

Nasdaq is proposing to trade shares of the 93 funds identified below (collectively, the ''Funds'') of the ProShares Trust (''Trust'') pursuant to unlisted trading privileges (''UTP'').

The text of the proposed rule change is available from Nasdaq's Web site at *nasdaq.complinet.com*, at Nasdaq's principal office, and at the Commission's Public Reference Room.

### II. Self-Regulatory Organization's Statement of the Purpose of, and Statutory Basis for, the Proposed Rule Change

In its filing with the Commission, the Exchange included statements concerning the purpose of, and basis for, the proposed rule change and discussed any comments it received on the proposed rule change. The text of these statements may be examined at the places specified in Item III below. The Exchange has prepared summaries, set forth in Sections A, B, and C below, of the most significant aspects of such statements.

[1] 15 U.S.C. 78s(b)(1).

[2] 17 CFR 240.19b–4.

*A. Self-Regulatory Organization's Statement of the Purpose of, and Statutory Basis for, the Proposed Rule Change*

1. Purpose

The Exchange proposes to trade, pursuant to UTP, the Shares of 93 Funds, which are exchange-traded funds (''ETFs''). The Commission has approved exchange rules for the original listing and trading of the Shares on the American Stock Exchange (''Amex''). Nasdaq is submitting this filing because its current generic listing standards for ETFs do not extend to ETFs with the investment objective of corresponding to a specified multiple of the performance, or the inverse performance, of an index that underlies each Fund (each such index is referred to below as an ''Underlying Index''), rather than merely mirroring the performance of the index. Systems operated by Nasdaq and its affiliates currently trade on an over-the-counter basis (as facilities of the NASD) those Shares that have already commenced trading on Amex; some of the Shares were approved for listing and trading only recently, and actual trading has not yet commenced. This filing will allow Nasdaq to trade the Shares as an exchange.

Ultra Funds

Certain Funds seek daily investment results, before fees and expenses, that correspond to twice (200%) the daily performance of the Underlying Indexes (''Ultra Funds''). If such Funds meet their objective, the net asset value (the ''NAV'') [3] of the Shares of each Fund should increase (on a percentage basis) approximately twice as much as the Fund's Underlying Index when the prices of the securities in such Index increase on a given day, and should lose approximately twice as much when such prices decline on a given day. This filing applies to the following Ultra Funds:

4 Ultra Funds listed and traded on Amex pursuant to Commission order on May 10, 2006 [4]: (1) Ultra S&P 500, (2) Ultra Nasdaq-100, (3) Ultra Dow 30, and (4) Ultra S&P Mid-Cap 400; and

27 Ultra Funds listed and traded on Amex pursuant to Commission order on January 17, 2007 [5]: (1) Ultra Russell 2000, (2) Ultra S&P SmallCap 600, (3) Ultra S&P500/Citigroup Value, (4) Ultra S&P500/Citigroup Growth, (5) Ultra S&P MidCap 400/Citigroup Value, (6) Ultra S&P MidCap 400/Citigroup Growth, (7) Ultra S&P SmallCap 600/Citigroup Value, (8) Ultra S&P SmallCap 600/Citigroup Growth, (9) Ultra Basic Materials, (10) Ultra Consumer Goods, (11) Ultra Consumer Services, (12) Ultra Financials, (13) Ultra Health Care, (14) Ultra Industrials, (15) Ultra Oil & Gas, (16) Ultra Real Estate, (17) Ultra Semiconductors, (18) Ultra Technology, (19) Ultra Utilities, (20) Ultra Russell Midcap Index, (21) Ultra Russell Midcap Growth Index, (22) Ultra Russell Midcap Value Index, (23) Ultra Russell 1000 Index, (24) Ultra Russell 1000 Growth Index, (25) Ultra Russell 1000 Value Index, (26) Ultra Russell 2000 Growth Index, and (27) Ultra Russell 2000 Value Index.

Short Funds

Nasdaq also proposes to trade Shares of certain Funds that seek daily investment results, before fees and expenses, that correspond to the inverse or opposite of the daily performance (–100%) of the Underlying Indexes (''Short Funds''). If such a Fund is successful in meeting its objective, the NAV of the corresponding Shares should increase approximately as much (on a percentage basis) as the respective Underlying Index loses when the prices of the securities in the Index decline on a given day, or should decrease approximately as much as the respective Index gains when prices in the Index rise on a given day. This filing applies to the following Short Funds:

4 Short Funds listed and traded on Amex pursuant to Commission order on May 10, 2006 [6]: (1) Short S&P 500, (2) Short Nasdaq-100, (3) Short Dow 30, and (4) Short S&P Mid-Cap 400; and

27 Short Funds listed and traded on Amex pursuant to Commission order on January 17, 2007 [7]: (1) Short Russell 2000, (2) Short S&P SmallCap 600, (3) Short S&P500/Citigroup Value, (4) Short S&P500/Citigroup Growth, (5) Short S&P MidCap 400/Citigroup Value, (6) Short S&P MidCap 400/Citigroup Growth, (7) Short S&P SmallCap 600/Citigroup Value, (8) Short S&P

[3] NAV per Share of each Fund is computed by dividing the value of the net assets of such Fund (*i.e.*, the value of its total assets less total liabilities) by its total number of Shares outstanding. Expenses and fees are accrued daily and taken into account for purposes of determining NAV.

[4] Securities Exchange Act Release No. 53784 (May 10, 2006), 71 FR 28721 (May 17, 2006). These Funds were subsequently approved for UTP trading on NYSE Arca. *See* Securities Exchange Act Release No. 54026 (June 21, 2006), 71 FR 36850 (June 28, 2006).

[5] Securities Exchange Act Release No. 55117 (January 17, 2007), 72 FR 3442 (January 25, 2007). These Funds were subsequently approved for UTP trading on NYSE Arca. *See* Securities Exchange Act Release No. 55125 (January 18, 2007), 72 FR 3462 (January 25, 2007).

[6] *See supra* note 4.

[7] *See supra* note 5.

SmallCap 600/Citigroup Growth, (9) Short Basic Materials, (10) Short Consumer Goods, (11) Short Consumer Services, (12) Short Financials, (13) Short Health Care, (14) Short Industrials, (15) Short Oil & Gas, (16) Short Real Estate, (17) Short Semiconductors, (18) Short Technology, (19) Short Utilities, (20) Short Russell Midcap Index, (21) Short Russell Midcap Growth Index, (22) Short Russell Midcap Value Index, (23) Short Russell 1000 Index, (24) Short Russell 1000 Growth Index, (25) Short Russell 1000 Value Index, (26) Short Russell 2000 Growth Index, and (27) Short Russell 2000 Value Index.

**UltraShort Funds**

Nasdaq also proposes to trade Shares of certain Funds that seek daily investment results, before fees and expenses, that correspond to twice the inverse (–200%) of the daily performance of the Underlying Indexes (''UltraShort Funds''). If such a Fund is successful in meeting its objective, the NAV of the corresponding Shares should increase approximately twice as much (on a percentage basis) as the respective Underlying Index loses when the prices of the securities in the Index decline on a given day, or should decrease approximately twice as much as the respective Underlying Index gains when such prices rise on a given day. This filing applies to the following UltraShort Funds:

4 UltraShort Funds listed and traded on Amex pursuant to Commission order on June 23, 2006 [8]: (1) UltraShort S&P 500, (2) UltraShort Nasdaq-100, (3) UltraShort Dow 30, and (4) UltraShort S&P Mid-Cap 400; and

27 UltraShort funds listed and traded on Amex pursuant to Commission order on January 17, 2007 [9]: (1) UltraShort Russell 2000, (2) UltraShort S&P SmallCap 600, (3) UltraShort S&P500/Citigroup Value, (4) UltraShort S&P500/Citigroup Growth, (5) UltraShort S&P MidCap 400/Citigroup Value, (6) UltraShort S&P MidCap 400/Citigroup Growth, (7) UltraShort S&P SmallCap 600/Citigroup Value, (8) UltraShort S&P SmallCap 600/Citigroup Growth, (9) UltraShort Basic Materials, (10) UltraShort Consumer Goods, (11) UltraShort Consumer Services, (12) UltraShort Financials, (13) UltraShort Health Care, (14) UltraShort Industrials, (15) UltraShort Oil & Gas, (16) UltraShort Real Estate, (17) UltraShort Semiconductors, (18) UltraShort Technology, (19) UltraShort Utilities, (20) UltraShort Russell Midcap Index, (21) UltraShort Russell Midcap Growth Index, (22) UltraShort Russell Midcap Value Index, (23) UltraShort Russell 1000 Index, (24) UltraShort Russell 1000 Growth Index, (25) UltraShort Russell 1000 Value Index, (26) UltraShort Russell 2000 Growth Index, and (27) UltraShort Russell 2000 Value Index.

Access to the current portfolio composition of each Fund is currently available through the Trust's Web site (*http://www.proshares.com*).[10] The Underlying Indexes are identified in Amex's proposed rule changes to list the Funds (the ''Original Filings'').[11] The Original Filings state that Amex would disseminate for each Fund on a daily basis by means of Consolidated Tape Association (''CTA'') and CQ High Speed Lines information with respect to an Indicative Intra-Day Value (''IIV''), the daily trading volume, closing price, NAV, and final dividend amounts, if any, to be paid for each Fund.[12]

The Original Filings state that the daily closing index value and the percentage change in the daily closing index value for each Underlying Index would be publicly available on various Web sites such as *http://www.bloomberg.com.* The Original Filings further state that data regarding each Underlying Index are also available from the respective index provider to subscribers. According to the Original Filings, several independent data vendors package and disseminate index data in various value-added formats (including vendors displaying both securities and index levels and vendors displaying index levels only).

The Original Filings state that the value of each Underlying Index is updated intra-day on a real-time basis as its individual component securities change in price, and the intra-day values of each Underlying Index are disseminated at least every 15 seconds throughout Amex's trading day by Amex or another organization authorized by the relevant Underlying Index provider.

To provide updated information relating to each Fund for use by investors, professionals, and persons wishing to create or redeem Shares, Amex disseminates through the facilities of the CTA: (1) Continuously throughout Amex's trading day, the market value of a Share; and (2) at least every 15 seconds throughout Amex's trading day, the IIV as calculated by Amex.

Shares would trade on Nasdaq from 9:30 a.m. ET until 8 p.m. ET, even if the IIV is not disseminated from 4:15 p.m. ET to 8 p.m. ET.[13] Nasdaq has appropriate rules to facilitate transactions in the Shares during these trading sessions.

Nasdaq will halt trading in the Shares of a Fund under the conditions specified in Nasdaq Rules 4120 and 4121. The conditions for a halt include a regulatory halt by the listing market. UTP trading in the Shares will also be governed by provisions of Nasdaq Rule 4120 relating to temporary interruptions in the calculation or wide dissemination of the IOPV or the value of the Underlying Index.[14] Additionally, Nasdaq may cease trading the Shares if other unusual conditions or circumstances exist which, in the opinion of Nasdaq, makes further dealings on Nasdaq detrimental to the maintenance of a fair and orderly market. Nasdaq will also follow any procedures with respect to trading halts as set forth in Nasdaq Rule 4120(c). Finally, Nasdaq will stop trading the Shares of a Fund if the listing market delists them.

In connection with the trading of the Shares, Nasdaq will inform Nasdaq members in an Information Circular of the special characteristics and risks associated with trading the Shares, as

[8] Securities Exchange Act Release No. 54040 (June 23, 2006), 71 FR 37629 (June 30, 2006). These Funds were subsequently approved for UTP trading on NYSE Arca. *See* Securities Exchange Act Release No. 54045 (June 26, 2006), 71 FR 37971 (July 3, 2006).

[9] *See supra* note 5.

[10] The Trust's Web site is publicly accessible at no charge and contains the following information for each Fund's Shares: (1) The prior business day's closing NAV, the reported closing price, and a calculation of the premium or discount of such price in relation to the closing NAV; (2) data for a period covering at least the current and three immediately preceding calendar quarters (or the life of a Fund, if shorter) indicating how frequently each Fund's Shares traded at a premium or discount to NAV based on the daily closing price and the closing NAV, and the magnitude of such premiums and discounts; (3) its prospectus and product description; and (4) other quantitative information such as daily trading volume. The prospectus and/or product description for each Fund would inform investors that the Trust's Web site has information about the premiums and discounts at which the Fund's Shares have traded.

[11] *See supra* notes 4, 5 and 8.

[12] The Original Filings explain that, if the IIV is not disseminated as required, Amex would halt trading in the shares of the Funds. If Amex halts trading for this reason, then Nasdaq would do so as well.

[13] Because NSCC does not disseminate the new basket amount to market participants until approximately 6 p.m. to 7 p.m. ET, an updated IIV is not possible to calculate from 4:15 p.m. to 8 p.m. ET. It is also Nasdaq's understanding that the official index sponsors for the Underlying Indexes currently do not calculate updated index values during those times. However, if the index sponsors calculated an Underlying Index for a Fund during those times in the future, Nasdaq would not trade that Fund during those times unless the official index value were widely disseminated.

[14] *See* Securities Exchange Act Release No. 55269 (February 9, 2007), 72 FR 7490 (February 15, 2007) (SR–NASDAQ–2006–050).

well as the requirements of Nasdaq Rule 2310, which requires Nasdaq members to determine that a particular security is suitable for a customer before recommending a transaction in it. Nasdaq also would require its members to deliver a prospectus or product description to investors purchasing the Shares prior to or concurrently with a transaction in the Shares.

Nasdaq deems the Shares to be equity securities, thus rendering trading in the Shares subject to Nasdaq's existing rules applicable to UTP trading of equity securities. Nasdaq believes that its surveillance procedures are adequate to address any concerns about the trading of the Shares on Nasdaq. Trading of the Shares through NASD facilities operated by Nasdaq is currently subject to NASD's surveillance procedures for equity securities in general and ETFs in particular. After Nasdaq begins to trade the Shares as an exchange, NASD, on behalf of Nasdaq, will continue to monitor such trading. Nasdaq's transition to exchange status will not result in any change in the surveillance process with respect to the Shares.[15]

2. Statutory Basis

The Exchange believes that the proposed rule change is consistent with Section 6(b) of the Act [16] in general and furthers the objectives of Section 6(b)(5) [17] in particular in that it is designed to prevent fraudulent and manipulative acts and practices, to promote just and equitable principles of trade, remove impediments to a free and open market and a national market system, and, in general, to protect investors and the public interest. In addition, the Exchange believes that the proposal is consistent with Rule 12f–5 under the Act [18] because it deems the Shares to be equity securities, thus rendering trading in the Shares subject to Nasdaq's existing rules governing the trading of equity securities.

*B. Self-Regulatory Organization's Statement on Burden on Competition*

The Exchange does not believe that the proposed rule change will result in any burden on competition that is not necessary or appropriate in furtherance of the purposes of the Act, as amended. The proposal will promote competition with respect to trading of the Shares by ensuring that Nasdaq can continue to trade the Shares after it begins to operate as an exchange for non-Nasdaq securities.

*C. Self-Regulatory Organization's Statement on Comments on the Proposed Rule Change Received From Members, Participants or Others*

Written comments were neither solicited nor received.

**III. Solicitation of Comments**

Interested persons are invited to submit written data, views, and arguments concerning the foregoing, including whether the proposed rule change is consistent with the Act. Comments may be submitted by any of the following methods:

*Electronic Comments*

- Use the Commission's Internet comment form (*http://www.sec.gov/rules/sro.shtml*); or
- Send an e-mail to *rule-comments@sec.gov.* Please include File Number SR–NASDAQ–2007–011 on the subject line.

*Paper Comments*

- Send paper comments in triplicate to Nancy M. Morris, Secretary, Securities and Exchange Commission, 100 F Street, NE., Washington, DC 20549–1090.

All submissions should refer to File Number SR–NASDAQ–2007–011. This file number should be included on the subject line if e-mail is used. To help the Commission process and review your comments more efficiently, please use only one method. The Commission will post all comments on the Commission's Internet Web site (*http://www.sec.gov/rules/sro.shtml*). Copies of the submission, all subsequent amendments, all written statements with respect to the proposed rule change that are filed with the Commission, and all written communications relating to the proposed rule change between the Commission and any person, other than those that may be withheld from the public in accordance with the provisions of 5 U.S.C. 552, will be available for inspection and copying in the Commission's Public Reference Room. Copies of such filing also will be available for inspection and copying at the principal office of the Exchange. All comments received will be posted without change; the Commission does not edit personal identifying information from submissions. You should submit only information that you wish to make available publicly. All submissions should refer to File Number SR–NASDAQ–2007–011 and should be submitted on or before March 26, 2007.

**IV. Commission's Findings and Order Granting Accelerated Approval of the Proposed Rule Change**

After careful review, the Commission finds that the proposed rule change is consistent with the requirements of the Act and the rules and regulations thereunder applicable to a national securities exchange.[19] In particular, the Commission finds that the proposed rule change is consistent with Section 6(b)(5) of the Act,[20] which requires that an exchange have rules designed, among other things, to promote just and equitable principles of trade, to remove impediments to and perfect the mechanism of a free and open market and a national market system, and in general to protect investors and the public interest. The Commission believes that this proposal should benefit investors by increasing competition among markets that trade the Shares.

In addition, the Commission finds that the proposal is consistent with Section 12(f) of the Act,[21] which permits an exchange to trade, pursuant to UTP, a security that is listed and registered on another exchange.[22] The Commission notes that it previously approved the listing and trading of the Shares on Amex and the trading of the Shares on NYSE Arca pursuant to UTP.[23] The Commission also finds that the proposal is consistent with Rule 12f–5 under the Act,[24] which provides that an exchange shall not extend UTP to a security unless the exchange has in effect a rule or rules providing for transactions in the class or type of security to which the exchange extends UTP. The Exchange has represented that it meets this requirement because it deems the Shares to be equity securities, thus rendering trading in the Shares subject to the Exchange's existing rules

[15] Surveillance of all trading on NASD facilities operated by Nasdaq, including the trading of Shares, is currently being conducted by NASD. After Nasdaq begins to trade the Shares as an exchange, NASD will continue to surveil trading, pursuant to a regulatory services agreement. Nasdaq is responsible for NASD's performance under this regulatory services agreement.

[16] 15 U.S.C. 78f(b).

[17] 15 U.S.C. 78f(b)(5).

[18] 17 CFR 240.12f–5.

[19] In approving this rule change, the Commission notes that it has considered the proposal's impact on efficiency, competition, and capital formation. *See* 15 U.S.C. 78c(f).

[20] 15 U.S.C. 78f(b)(5).

[21] 15 U.S.C. 78l(f).

[22] Section 12(a) of the Act, 15 U.S.C. 78*l*(a), generally prohibits a broker-dealer from trading a security on a national securities exchange unless the security is registered on that exchange pursuant to Section 12 of the Act. Section 12(f) of the Act excludes from this restriction trading in any security to which an exchange ''extends UTP.'' When an exchange extends UTP to a security, it allows its members to trade the security as if it were listed and registered on the exchange even though it is not so listed and registered.

[23] *See supra* notes 4–9.

[24] 17 CFR 240.12f–5.

governing the trading of equity securities.

The Commission further believes that the proposal is consistent with Section 11A(a)(1)(C)(iii) of the Act,[25] which sets forth Congress' finding that it is in the public interest and appropriate for the protection of investors and the maintenance of fair and orderly markets to assure the availability to brokers, dealers, and investors of information with respect to quotations for and transactions in securities. Quotations for and last sale information regarding the Shares are disseminated through the facilities of the CTA and the Consolidated Quotation System. Furthermore, the IIV, updated to reflect changes in currency exchange rates, is calculated by Amex and published via the facilities of the Consolidated Tape Association on a 15-second delayed basis throughout the Exchange's Core Trading Session. In addition, if the listing market halts trading when the IIV is not being calculated or disseminated, the Exchange would halt trading in the Shares.

The Commission notes that, if the Shares should be delisted by the listing exchange, the Exchange would no longer have authority to trade the Shares pursuant to this order.

In support of this proposal, the Exchange has made the following representations:

1. The Exchange's surveillance procedures are adequate to properly monitor Exchange trading of the Shares in all trading sessions and to deter and detect violations of Exchange rules.

2. Prior to the commencement of trading, the Exchange would inform its members in an Information Bulletin of the special characteristics and risks associated with trading the Shares.

3. Prior to the commencement of trading, the Exchange would inform its members in an Information Bulletin the requirement that members deliver a prospectus to investors purchasing newly issued Shares prior to or concurrently with the confirmation of a transaction.

This approval order is conditioned on the Exchange's adherence to these representations.

The Commission finds good cause for approving this proposal before the thirtieth day after the publication of notice thereof in the **Federal Register**. As noted previously, the Commission previously found that the listing and trading of the Shares on Amex and the trading of the Shares on NYSE Area pursuant to UTP are consistent with the Act. The Commission presently is not aware of any regulatory issue that should cause it to revisit those findings or would preclude the trading of the Shares on the Exchange pursuant to UTP. Therefore, accelerating approval of this proposal should benefit investors by creating, without undue delay, additional competition in the market for the Shares.

[25] 15 U.S.C. 78k–1(a)(1)(C)(iii).

## V. Conclusion

*It is therefore ordered*, pursuant to Section 19(b)(2) of the Act,[26] that the proposed rule change (SR–NASDAQ–2007–011), be and it hereby is, approved on an accelerated basis.

For the Commission, by the Division of Market Regulation, pursuant to delegated authority.[27]

**Florence E. Harmon,**

*Deputy Secretary.*

[FR Doc. E7–3749 Filed 3–2–07; 8:45 am]

BILLING CODE 8010–01–P

[26] 15 U.S.C. 78s(b)(2).

[27] 17 CFR 200.30–3(a)(12).

---

## SECURITIES AND EXCHANGE COMMISSION

**[Release No. 34–55355; File No. SR–NASDAQ–2007–007]**

## Self-Regulatory Organizations; The NASDAQ Stock Market LLC; Notice of Filing and Immediate Effectiveness of Proposed Rule Change Regarding Technical and Conforming Changes to Nasdaq's 7000 Series Rules

February 26, 2007.

Pursuant to Section 19(b)(1) of the Securities Exchange Act of 1934 (''Act'') [1] and Rule 19b–4 thereunder,[2] notice is hereby given that on February 9, 2007, The NASDAQ Stock Market LLC (''Nasdaq'') filed with the Securities and Exchange Commission (''Commission'') the proposed rule change as described in Items I and II below, which Items have been substantially prepared by Nasdaq. Nasdaq has designated this proposal as non-controversial under Section 19(b)(3)(A)(iii) of the Act [3] and Rule 19b–4(f)(6) thereunder,[4] which renders the proposed rule change effective upon filing with the Commission. The Commission is publishing this notice to solicit comments on the proposed rule change from interested persons.

[1] 15 U.S.C. 78s(b)(1).

[2] 17 CFR 240.19b–4.

[3] 15 U.S.C. 78s(b)(3)(A)(iii).

[4] 17 CFR 240.19b–4(f)(6).

### I. Self-Regulatory Organization's Statement of the Terms of Substance of the Proposed Rule Change

Nasdaq proposes to reflect in the Rule 7000 Series of Nasdaq's rules certain changes made to the Rule 7000 Series of the rules of the National Association of Securities Dealers, Inc. (''NASD'') in recent months with respect to systems operated by Nasdaq and its affiliates under NASD rules, and to make other conforming changes to reflect Nasdaq commencing operations as an exchange for trading non-Nasdaq listed securities on February 12, 2007. Nasdaq proposed to implement the proposed rule change on February 12, 2007.

The text of the proposed rule change is below. Proposed new language is in italics; proposed deletions are in brackets.

**7013. Consolidated Quotation Service and Exchange-Listed Securities Transaction Credit.**

(a) No change.

(b) Nasdaq members that trade securities listed on the NYSE (''Tape A'') and Amex (''Tape B'') through Nasdaq may receive from Nasdaq transaction credits based on the number of transactions attributed to them. A transaction is attributed to a member if the transaction is executed through [CAES, ITS or Nasdaq's Brut Facility] *the Nasdaq Market Center*, and the member acts as liquidity provider (i.e., the member sells in response to a buy order or buys in response to a sell order). A Nasdaq member may earn credits from one or both pools maintained by Nasdaq, each pool representing 50% of the revenue paid by the Consolidated Tape Association to Nasdaq for each of Tape A and Tape B transactions after deducting the amount that Nasdaq pays to the Consolidated Tape Association for capacity usage. A Nasdaq member may earn credits from the pools according to the member's pro rata share of transactions attributed to Nasdaq members in each of Tape A and Tape B for each calendar quarter. *Liquidity providers executing transactions in Tape B securities through the Nasdaq Market Center will receive credits with respect to such transactions on an estimated monthly basis; all other credits under this rule will be paid on a quarterly basis.*

**7014. [Computer Assisted Execution Service] Nasdaq Market Center for Non-Nasdaq Securities.**

The charges to be paid by members [receiving the Computer Assisted Execution Service (CAES)] *using the Nasdaq Market Center* for trading non-

Nasdaq exchange-listed securities through the Nasdaq Market Center shall consist of a fixed service charge of $200 per member per month, transaction charges as provided in Nasdaq Rule 7018 and equipment-related charges as provided elsewhere in the Rule 7000 Series.

**7015. Access Services.**

(a)–(c) No change.

(d) New Nasdaq Workstation.

| | |
|---|---|
| Nasdaq Workstation Trader | $475 per user per month (including data entitlement package). |
| Nasdaq Workstation Post Trade | See Rule 7015[(d)]*(e)*. |

(e)–(g) No change.

* * * * *

## II. Self-Regulatory Organization's Statement of the Purpose of, and Statutory Basis for, the Proposed Rule Change

In its filing with the Commission, Nasdaq included statements concerning the purpose of, and basis for, the proposed rule change and discussed any comments it received on the proposed rule change. The text of these statements may be examined at the places specified in Item IV below. Nasdaq has prepared summaries, set forth in sections A, B, and C below, of the most significant aspects of such statements.

*A. Self-Regulatory Organization's Statement of the Purpose of, and Statutory Basis for, the Proposed Rule Change*

1. Purpose

Nasdaq is modifying its 7000 Series Rules to reflect certain changes made to the Rule 7000 Series of the rules of the NASD in recent months with respect to systems operated by Nasdaq and its affiliates under NASD rules, and to make other conforming changes to reflect Nasdaq commencing operations as an exchange for trading non-Nasdaq listed securities on February 12, 2007.

Specifically, Nasdaq is:

- Amending Nasdaq Rule 7013 to reflect changes to NASD Rule 7010(c)(2) by SR–NASD–2006–067 [5] and to update system names to reflect Nasdaq's operation as an exchange.
- Amending Nasdaq Rule 7014 to update system names to reflect Nasdaq's operation as an exchange.
- Amending Nasdaq Rule 7015 to correct a cross-reference in the rule.

2. Statutory Basis

Nasdaq believes that the proposed rule change is consistent with the provisions of Section 6 of the Act,[6] in general, and with Sections 6(b)(4) and (5) of the Act,[7] in particular, in that the proposal provides for the equitable allocation of reasonable dues, fees and other charges among members and issuers and other persons using any facility or system which Nasdaq operates or controls, and is designed to prevent fraudulent and manipulative acts and practices, to promote just and equitable principles of trade, to foster cooperation and coordination with persons engaged in regulating, clearing, settling, processing information with respect to, and facilitating transactions in securities, to remove impediments to and perfect the mechanism of a free and open market and a national market system, and, in general, to protect investors and the public interest.

*B. Self-Regulatory Organization's Statement on Burden on Competition*

Nasdaq does not believe that the proposed rule change will result in any burden on competition that is not necessary or appropriate in furtherance of the purposes of the Act.

*C. Self-Regulatory Organization's Statement on Comments on the Proposed Rule Change Received From Members, Participants or Others*

Written comments were neither solicited nor received.

## III. Date of Effectiveness of the Proposed Rule Change and Timing for Commission Action

Because the foregoing proposed rule change (i) Does not significantly affect the protection of investors or the public interest; (ii) does not impose any significant burden on competition; and (iii) does not become operative for 30 days from the date on which it was filed, or such shorter time as the Commission may designate, if consistent with the protection of investors and the public interest, it has become effective pursuant to Section 19(b)(3)(A) of the Act [8] and subparagraph (f)(6)(iii) of Rule 19b–4 thereunder.[9]

A proposed rule change filed under Rule 19b–4(f)(6) normally does not become operative for 30 days after the date of filing. However, Rule 19b–4(f)(6)(iii) permits the Commission to waive the operative delay if such action is consistent with the protection of investors and the public interest. Nasdaq has requested that the Commission waive the five-day notice requirement and 30-day operative delay and designate the proposed rule change immediately operative.

The Commission is exercising its authority to waive the five-day notice requirement and believes that waiver of the 30-day operative delay is consistent with the protection of investors and the public interest. The Commission notes that the rule changes proposed herein are intended to conform to changes which have either recently been made effective as changes to NASD rules or are merely technical in nature. Thus, Nasdaq's proposal raises no new issues of regulatory concern. Moreover, waiving the operative delay will allow Nasdaq to implement the changes immediately in conjunction with Nasdaq beginning to operate as a national securities exchange for trading non-Nasdaq securities. Therefore, the Commission has determined to waive both the five-day notice requirement and the 30-day delay and allow the proposed rule change to become operative upon filing.[10]

At any time within 60 days of the filing of the proposed rule change, the Commission may summarily abrogate such rule change if it appears to the Commission that such action is necessary or appropriate in the public interest, for the protection of investors, or otherwise in furtherance of the purposes of the Act.

## IV. Solicitation of Comments

Interested persons are invited to submit written data, views, and arguments concerning the foregoing, including whether the proposed rule change is consistent with the Act. Comments may be submitted by any of the following methods:

*Electronic Comments*

- Use the Commission's Internet comment form (*http://www.sec.gov/rules/sro.shtml*); or
- Send an e-mail to *rule-comments@sec.gov.* Please include File

[5] Securities Exchange Act Release No. 54015 (June 19, 2006), 71 FR 36369 (June 26, 2006) (SR–NASD–2006–067).

[6] 15 U.S.C. 78f.

[7] 15 U.S.C. 78f(b)(4) and (5).

[8] 15 U.S.C. 78s(b)(3)(A).

[9] 17 CFR 240.19b–4(f)(6)(iii).

[10] For purposes only of waiving the operative delay of this proposal, the Commission notes that it has considered the proposed rule's impact on efficiency, competition, and capital formation. 15 U.S.C. 78c(f).

No. SR–NASDAQ–2007–007 on the subject line.

*Paper Comments*

• Send paper comments in triplicate to Nancy M. Morris, Secretary, Securities and Exchange Commission, 100 F Street, NE., Washington, DC 20549–1090.

All submissions should refer to File Number SR–NASDAQ–2007–007. This file number should be included on the subject line if e-mail is used. To help the Commission process and review your comments more efficiently, please use only one method. The Commission will post all comments on the Commissions Internet Web site (*http://www.sec.gov/rules/sro.shtml*). Copies of the submission, all subsequent amendments, all written statements with respect to the proposed rule change that are filed with the Commission, and all written communications relating to the proposed rule change between the Commission and any person, other than those that may be withheld from the public in accordance with the provisions of 5 U.S.C. 552, will be available for inspection and copying in the Commission's Public Reference Room. Copies of such filing also will be available for inspection and copying at the principal office of the Exchange. All comments received will be posted without change; the Commission does not edit personal identifying information from submissions. You should submit only information that you wish to make available publicly. All submissions should refer to File Number SR-NASDAQ–2007–007 and should be submitted on or before March 26, 2007.

For the Commission, by the Division of Market Regulation, pursuant to delegated authority.[11]

**Florence E. Harmon,**

*Deputy Secretary.*

[FR Doc. E7–3751 Filed 3–2–07; 8:45 am]

**BILLING CODE 8010–01–P**

[11] 17 CFR 200.30–3(a)(12).

## SECURITIES AND EXCHANGE COMMISSION

**[Release No. 34–55346; File No. SR–NASD–2007–014]**

## Self-Regulatory Organizations; National Association of Securities Dealers, Inc.; Notice of Filing and Immediate Effectiveness of Proposed Rule Change To Make Conforming Changes to the Rules Relating to the NASD/NSX TRF, NASD/BSE TRF, and NASD/NYSE TRF Consistent With the New Requirements of Regulation NMS

February 26, 2007.

Pursuant to Section 19(b)(1) of the Securities Exchange Act of 1934 (''Act'') [1] and Rule 19b–4 thereunder,[2] notice is hereby given that on February 12, 2007, the National Association of Securities Dealers, Inc. (''NASD'') filed with the Securities and Exchange Commission (''Commission'') the proposed rule change as described in Items I, II, and III below, which Items have been substantially prepared by NASD. NASD has filed the proposal as a ''non-controversial'' rule change pursuant to Section 19(b)(3)(A) of the Act [3] and Rule 19b–4(f)(6) thereunder,[4] which renders it effective upon filing with the Commission. The Commission is publishing this notice to solicit comments on the proposed rule change from interested persons.

### I. Self-Regulatory Organization's Statement of the Terms of Substance of the Proposed Rule Change

NASD proposes (1) amendments to the transaction reporting rules relating to the NASD/NSX Trade Reporting Facility (''NASD/NSX TRF''), the NASD/BSE Trade Reporting Facility (''NASD/BSE TRF''), and the NASD/NYSE Trade Reporting Facility (''NASD/NYSE TRF'') (collectively referred to herein as the ''Subject TRFs'') consistent with the new requirements of Regulation NMS under the Act;[5] and (2) technical amendments to conform, to the extent practicable, the reporting rules of the Subject TRFs to the reporting rules of the NASD/Nasdaq Trade Reporting Facility (''NASD/Nasdaq TRF'') and NASD's Alternative Display Facility (''ADF''). The text of the proposed rule change is available at NASD, the Commission's Public Reference Room, and *http://www.nasd.com*.

[1] 15 U.S.C. 78s(b)(1).

[2] 17 CFR 240.19b–4.

[3] 15 U.S.C. 78s(b)(3)(A).

[4] 17 CFR 240.19b–4(f)(6).

[5] *See* Securities Exchange Act Release No. 51808 (June 9, 2005), 70 FR 37496 (June 29, 2005) (''Regulation NMS Adopting Release'').

### II. Self-Regulatory Organization's Statement of the Purpose of, and Statutory Basis for, the Proposed Rule Change

In its filing with the Commission, NASD included statements concerning the purpose of and basis for the proposed rule change and discussed any comments it received on the proposed rule change. The text of these statements may be examined at the places specified in Item IV below. NASD has prepared summaries, set forth in Sections A, B, and C below, of the most significant aspects of such statements.

*A. Self-Regulatory Organization's Statement of the Purpose of, and Statutory Basis for, the Proposed Rule Change*

1. Purpose

Background

On June 29, 2005, the Commission published its release adopting Regulation NMS,[6] which established new substantive rules designed to modernize and strengthen the regulatory structure of the U.S. equities markets. Pursuant to Regulation NMS, the Commission, among other things, adopted Rule 611 (''Order Protection Rule'') to establish protection against trade-throughs for NMS stocks.[7]

In general, the Order Protection Rule requires a trading center (which includes national securities exchanges, self-regulatory organization (''SRO'') trading facilities, alternative trading systems, OTC market makers, and block positioners) to establish, maintain, and enforce written policies and procedures that are reasonably designed to prevent trade-throughs on that trading center of protected quotations and, if relying on an exception, that are reasonably designed to assure compliance with the terms of the exception. There currently are nine exceptions and two exemptions to the Order Protection Rule.[8] In

[6] *Id.*

[7] NMS stock is defined in Rule 600(b)(47) of Regulation NMS as ''any NMS security other than an option.'' Rule 600(b)(46) of Regulation NMS defines NMS security as ''any security or class of securities for which transaction reports are collected, processed, and made available pursuant to an effective transaction reporting plan, or an effective national market system plan for reporting transactions in listed options.''

[8] *See* 17 CFR 242.611; Securities Exchange Act Release Nos. 54389 (August 31, 2006), 71 FR 52829 (September 7, 2006) (Order Granting an Exemption for Qualified Contingent Trades from Rule 611(a) of Regulation NMS) and 54678 (October 31, 2006), 71 FR 65018 (November 6, 2006) (Order Exempting Certain Sub-Penny Trade-Throughs from Rule 611 of Regulation NMS).

addition, the Order Protection Rule requires trading centers to surveil regularly to ascertain the effectiveness of the policies and procedures adopted pursuant to Rule 611 of Regulation NMS and take prompt action to remedy deficiencies in such policies and procedures.

On November 6, 2006, the Commission approved the establishment of the NASD/NSX TRF.[9] On December 13, 2006, the Commission approved the establishment of the NASD/BSE TRF.[10] On February 1, 2007, NASD filed for immediate effectiveness a proposed rule change relating to the establishment of the NASD/NYSE TRF.[11] The Subject TRFs provide members additional mechanisms for reporting locked-in trades in exchange-listed securities executed otherwise than on an exchange.

Neither NASD, generally, nor any of the NASD Trade Reporting Facilities, specifically, qualifies as a trading center within the meaning of Regulation NMS. Thus, the provisions of the Order Protection Rule requiring trading centers to establish, maintain, and enforce written policies and procedures that are reasonably designed to prevent trade-throughs on that trading center of protected quotations in NMS stocks are not applicable to NASD. However, NASD has a responsibility to enforce requirements under the Act that apply to activity within its regulatory authority. Thus, unlike exchanges that have direct Regulation NMS obligations with respect to the SRO trading facilities, NASD has indirect Regulation NMS obligations with respect to all over-the-counter market activity, including post-trade regulation for compliance with the Order Protection Rule with respect to trading centers that trade report through an NASD Trade Reporting Facility. Such regulation includes monitoring for whether trading centers are reporting trades to an NASD Trade Reporting Facility that are trade-throughs of protected quotes and whether such trade-throughs are permissible under one of the specific exceptions and exemptions under the Order Protection Rule.

Proposed Amendments To Align the Rules of the Subject TRFs With Regulation NMS

NASD proposes to amend Rule 4632C relating to the NASD/NSX TRF, Rule 4632D relating to the NASD/BSE TRF, and Rule 4632E relating to the NASD/NYSE TRF to require reporting members to append applicable modifiers to last-sale transaction reports with respect to trades that fall within the exceptions and exemptions from Rule 611 of Regulation NMS. The proposed amendments are substantially similar to amendments to the transaction reporting requirements relating to the ADF, which were approved by the Commission on September 28, 2006,[12] and the NASD/Nasdaq TRF, which were filed for immediate effectiveness on January 8, 2007.[13]

Specifically, NASD proposes to adopt new paragraph (a)(5)(C) of Rule 4632C, paragraph (a)(5)(F) of Rule 4632D, and paragraph (a)(5)(I) of Rule 4632E to require members to append a unique modifier, specified by NASD, to indicate whether the trade would be a trade-through of a protected quotation but for the trade being qualified for an exception or exemption from Rule 611 of Regulation NMS. Further, NASD proposes to adopt new paragraph (a)(5)(D) of Rule 4632C, paragraph (a)(5)(G) of Rule 4632D, and paragraph (a)(5)(J) of Rule 4632E to require that, for any trade that would be a trade-through of a protected quotation but for the trade being qualified for an exception or exemption from Rule 611 of Regulation NMS, a member must append to the transaction report, in addition to the modifier required under new Rule 4632C(a)(5)(C), Rule 4632D(a)(5)(F), and Rule 4632E(a)(5)(I), respectively, a unique modifier, specified by NASD, that identifies the specific applicable exception or exemption from Rule 611 of Regulation NMS upon which the member is relying.[14] As stated in the proposed rules, these modifiers will be used in conformity with the specifications approved by the Operating Committee of the relevant National Market System Plans to identify trades executed pursuant to an exception or exemption from Rule 611 of Regulation NMS. NASD, along with the respective Subject TRFs, will publish technical specifications regarding the specific modifiers required under the proposed new rules.

Additionally, NASD proposes to adopt new paragraph (a)(5)(E) of Rule 4632C, paragraph (a)(5)(H) of Rule 4632D, and paragraph (a)(5)(K) of Rule 4632E to require members to append ''[a]ny other modifier as specified by NASD or the Securities and Exchange Commission.'' An identical provision in the ADF rules was subject to notice and comment and approved by the Commission pursuant to SR–NASD–2006–091 and also was incorporated in Rule 4632 relating to the NASD/Nasdaq TRF pursuant to SR–NASD–2007–002. Under this proposed provision, NASD will have the authority to prescribe additional trade report modifiers by updating the Technical Specifications for the Subject TRFs without submitting a further proposed rule change for approval by the Commission. For example, such authority will be used to require additional modifiers to designate trades that qualify under two existing exemptions from the Order Protection Rule (qualified contingent trades and certain sub-penny trade-throughs) [15] as well as any other exemption that the Commission may grant in the future. This authority may also be used to capture additional regulatory information that NASD deems necessary (*e.g.*, NASD will require more specific delineation of the Intermarket Sweep Order (''ISO'') exception than is required by the National Market System specifications).[16] To enable members to make the necessary systems changes, NASD would provide at least 30 days advance written notice relating to any new modifiers.

NASD also proposes to amend Rules 4632C, 4632D, and 4632E to expressly

[9] *See* Securities Exchange Act Release No. 54715 (November 6, 2006), 71 FR 66354 (November 14, 2006) (SR–NASD–2006–108). The NASD/NSX TRF commenced operation for the reporting of over-the-counter trades in Nasdaq-listed securities on November 27, 2006 and is expected to expand to the reporting of over-the-counter trades in all exchange-listed securities in the first quarter of 2007.

[10] *See* Securities Exchange Act Release No. 54931 (December 13, 2006), 71 FR 76409 (December 20, 2006) (SR–NASD–2006–115). The NASD/BSE TRF will commence operation upon successful completion of system testing and certification (currently anticipated to be in the first quarter of 2007).

[11] *See* Securities Exchange Act Release No. 55325 (February 21, 2007) (SR–NASD–2007–011). The NASD/NYSE TRF will commence operation upon successful completion of system testing and certification (currently anticipated to be in the first quarter of 2007).

[12] *See* Securities Exchange Act Release No. 54537 (September 28, 2006), 71 FR 59173 (October 6, 2006) (SR–NASD–2006–091). *See also* Securities Exchange Act Release No. 55088 (January 11, 2007), 72 FR 2573 (January 19, 2007) (SR–NASD–2007–001). Unlike the ADF, an NASD Trade Reporting Facility (*e.g.*, the NASD/NSX TRF) is a trade reporting mechanism only; it does not permit quoting. As such, not all of the amendments to the ADF rules are applicable to the rules relating to the NASD Trade Reporting Facilities.

[13] *See* Securities Exchange Act Release No. 55101 (January 12, 2007), 72 FR 2568 (January 19, 2007) (SR–NASD–2007–002).

[14] A Member using the trade report modifiers under the proposed new rules is responsible for ensuring that the transaction meets the criteria of the specific exemption or exception set forth in Rule 611 of Regulation NMS.

[15] *See supra* note 8.

[16] The National Market System specifications identify both types of ISO orders with a single modifier. NASD, however, intends to distinguish between the ISO exceptions by requiring firms to use a separate modifier, as defined by NASD, in instances where the executing firm is responsible for sweeping the market.

provide that, in the event that the rules require multiple modifiers on any given trade report, members are to report in accordance with guidance published by NASD regarding priorities among modifiers, if such guidance is provided. A Member that reports in accordance with such guidance would not be in violation of the trade reporting rules for failing to use a particular modifier.

NASD believes that the proposed rule change is necessary to ensure that there is transparency relating to trades that are exempt from the trade-through rule and to enhance NASD's ability to examine for compliance with the Order Protection Rule.

Proposed Amendments to Rules of the Subject TRFs To Conform to NASD/Nasdaq TRF and ADF Rules

NASD proposes changes to conform, to the extent practicable, the reporting rules of the Subject TRFs to the NASD/Nasdaq TRF and ADF reporting rules. Specifically, NASD proposes to reorganize Rule 4632C relating to the NASD/NSX TRF, Rule 4632D relating to the NASD/BSE TRF, and Rule 4632E relating to the NASD/NYSE TRF and renumber paragraphs (a)(3) and (a)(5) of Rule 4632C, paragraphs (a)(3) and (a)(6) of Rule 4632D, and paragraphs (a)(3) and (a)(6) of Rule 4632E, without amending the text of those provisions. NASD also proposes to renumber paragraphs (a)(4), (a)(6), and (a)(8) of Rule 4632C, paragraphs (a)(5), (a)(8), and (a)(10) of Rule 4632D and paragraphs (a)(5), (a)(8), and(a)(10) of Rule 4632E, and amend the text of those provisions to conform to the text of the equivalent provisions in Rule 4632 relating to the NASD/Nasdaq TRF.

Additionally, NASD proposes to adopt new Rules 4632C(a)(5), 4632D(a)(5), and 4632E(a)(5) to require members to use trade report modifiers designated by NASD for certain enumerated transactions. As with the NASD/Nasdaq TRF and ADF, members will be required to include such modifiers on all trade reports, including reports of ''as/of'' trades.[17] Consistent with SR–NASD–2007–001 and SR–NASD–2007–002, the proposed amendments to Rules 4632C, 4632D, and 4632E would delete the labels (*e.g.*, .T or .W) for the modifiers that members are required to use when reporting the enumerated transactions. Thus, Rules 4632C, 4632D, and 4632E would identify the types of transactions that must have a unique identifier associated with them, and such modifiers would be labeled in the system technical specifications rather than in the rules.

It should be noted that, because of differences in functionality, not all of the rules relating to NASD's Trade Reporting Facilities are identical. For example, unlike the NASD/Nasdaq TRF, the NASD/BSE TRF, and the NASD/NYSE TRF, pursuant to current Rule 4632C(a)(7), the NASD/NSX TRF does not accept trade reports for Stop Stock Transactions (as such term is defined in Rule 4200C), transactions occurring at prices based on average-weighting or other special pricing formulae, or transactions that reflect a price different from the current market when the execution price is based on a prior reference point in time. In this proposed rule change, NASD proposes to renumber Rule 4632C(a)(7) as 4632C(a)(8) without amending the text of the rule.

In addition, neither the NASD/NSX TRF nor the NASD/BSE TRF will accept trades reported as other than regular way settlement (see Rules 6130C(a) and 6130D(a), respectively). Thus, unlike Rule 4632(a)(5) relating to the NASD/Nasdaq TRF and Rule 4632E(a)(5) relating to the NASD/NYSE TRF, proposed Rules 4632C(a)(5) and 4632D(a)(5) do not include provisions pertaining to trade report modifiers for Seller's Option, Cash, or Next Day transactions.

As discussed in footnote 17 above, the NASD/NSX TRF and NASD/BSE TRF rules currently do not provide for the submission of ''as/of'' trade reports; however, once the necessary system changes have been made, NASD will file a separate proposed rule change proposing amendments to Rules 4632C(a)(2)(B) and (D) and 4632D(a)(2)(B) and (D) that are consistent with Rule 4632(a)(2)(B) and (D) and proposed Rule 4632E(a)(2)(B) and (D).

NASD has filed the proposed rule change for immediate effectiveness. In accordance with the Regulation NMS compliance dates established by the Commission,[18] NASD proposes to make the proposed rule change operative on the Pilot Stocks Phase Date, which is currently anticipated to be July 9, 2007. However, members may begin submitting trade reports to the Subject TRFs in compliance with the proposed rule change after the Trading Phase Date, which is currently anticipated to be March 5, 2007. This does not change in any way a member's responsibilities under the Regulation NMS compliance dates.[19]

2. Statutory Basis

NASD believes that the proposed rule change is consistent with the provisions of Section 15A(b)(6) of the Act,[20] which requires, among other things, that NASD rules be designed to prevent fraudulent and manipulative acts and practices, to promote just and equitable principles of trade, and, in general, to protect investors and the public interest. NASD believes that the proposed rule change facilitates the goals articulated in Regulation NMS, including providing an effective mechanism and regulatory framework for reporting over-the-counter transactions to NASD.

*B. Self-Regulatory Organization's Statement on Burden on Competition*

NASD does not believe that the proposed rule change will result in any burden on competition that is not necessary or appropriate in furtherance of the purposes of the Act.

*C. Self-Regulatory Organization's Statement on Comments on the Proposed Rule Change Received From Members, Participants or Others*

Written comments were neither solicited nor received.

**III. Date of Effectiveness of the Proposed Rule Change and Timing for Commission Action**

The foregoing proposed rule change is subject to Section 19(b)(3)(A)(iii) of the Act[21] and Rule 19b–4(f)(6) thereunder[22] because the proposal: (i) Does not significantly affect the protection of investors or the public interest; (ii) does not impose any significant burden on competition; and (iii) does not become operative prior to 30 days after the date

[17] The NASD/NSX TRF currently does not accept ''as/of''trade reports and the rules for the NASD/BSE TRF, which have been approved by the Commission but are not yet effective, also do not permit the submission of ''as/of'' trade reports. NASD will file a separate proposed rule change to reflect the reporting of ''as/of'' trades to the NASD/NSX TRF and NASD/BSE TRF. Thus, upon the operative date of this proposed rule change, members will be required to append all applicable trade report modifiers to ''as/of'' trade reports submitted to the NASD/NSX TRF and the NASD/BSE TRF. NASD reminds members that they should mark any ''as/of'' trade report for publication if that trade would have been for publication had it been reported on trade date.

[18] *See* Securities Exchange Act Release No. 55160 (January 24, 2007), 72 FR 4202 (January 30, 2007).

[19] NASD notes that, although the proposed rule change will not be operative until the Pilot Stocks Phase Date, members may be required to meet the Regulation NMS message format requirements for reporting to the Subject TRFs prior to that date. NASD will notify members of the date of mandatory compliance with Regulation NMS message formatting requirements for the Subject TRFs and on such date, members will be required to report in accordance with the new systems requirements, although the specific new modifiers proposed herein would continue to be voluntary until the Pilot Stocks Phase Date.

[20] 15 U.S.C. 78o–3(b)(6).

[21] 15 U.S.C. 78s(b)(3)(A)(iii).

[22] 17 CFR 240.19b–4(f)(6).

of filing or such shorter time as the Commission may designate if consistent with the protection of investors and the public interest; provided that NASD has given the Commission notice of its intent to file the proposed rule change, along with a brief description and text of the proposed rule change, at least five business days prior to the date of filing of the proposed rule change, or such shorter time as designated by the Commission.[23]

At any time within 60 days of the filing of such proposed rule change the Commission may summarily abrogate such rule change if it appears to the Commission that such action is necessary or appropriate in the public interest, for the protection of investors, or otherwise in furtherance of the purposes of the Act.

## IV. Solicitation of Comments

Interested persons are invited to submit written data, views, and arguments concerning the foregoing, including whether the proposed rule change is consistent with the Act. Comments may be submitted by any of the following methods:

*Electronic Comments*

- Use the Commission's Internet comment form (*http://www.sec.gov/rules/sro.shtml*); or
- Send an e-mail to *rule-comments@sec.gov.* Please include File Number SR–NASD–2007–014 on the subject line.

*Paper Comments*

- Send paper comments in triplicate to Nancy M. Morris, Secretary, Securities and Exchange Commission, 100 F Street, NE., Washington, DC 20549–1090.

All submissions should refer to File Number SR–NASD–2007–014. This file number should be included on the subject line if e-mail is used. To help the Commission process and review your comments more efficiently, please use only one method. The Commission will post all comments on the Commission's Internet Web site (*http://www.sec.gov/rules/sro.shtml*). Copies of the submission, all subsequent amendments, all written statements with respect to the proposed rule change that are filed with the Commission, and all written communications relating to the proposed rule change between the Commission and any person, other than those that may be withheld from the public in accordance with the provisions of 5 U.S.C. 552, will be available for inspection and copying in the Commission's Public Reference Room. Copies of the filing also will be available for inspection and copying at the principal office of NASD. All comments received will be posted without change; the Commission does not edit personal identifying information from submissions. You should submit only information that you wish to make available publicly. All submissions should refer to File Number SR–NASD–2007–014 and should be submitted on or before March 26, 2007.

For the Commission, by the Division of Market Regulation, pursuant to delegated authority.[24]

**Florence E. Harmon,**

*Deputy Secretary.*

[FR Doc. E7–3744 Filed 3–2–07; 8:45 am]

**BILLING CODE 8010–01–P**

[23] NASD has satisfied the five-day pre-filing requirement.

[24] 17 CFR 200.30–3(a)(12).

---

## SECURITIES AND EXCHANGE COMMISSION

**[Release No. 34–55351; File No. SR–NASD–2005–146]**

## Self-Regulatory Organizations; National Association of Securities Dealers, Inc.; Notice of Filing of Amendment No. 3 to and Order Granting Accelerated Approval of a Proposed Rule Change as Modified by Amendment Nos. 2 and 3 Thereto To Expand the Scope of IM–2110–2 Relating To Trading Ahead of Customer Limit Orders To Apply to All OTC Equity Securities

February 26, 2007.

## I. Introduction

On December 9, 2005, the National Association of Securities Dealers, Inc. (''NASD'') filed with the Securities and Exchange Commission (''Commission''), pursuant to Section 19(b)(1) of the Securities Exchange Act of 1934 (''Act'')[1] and Rule 19b–4 thereunder,[2] a proposed rule change to expand the scope of NASD Interpretive Material (''IM'') 2110–2, Trading Ahead of Customer Limit Order (''IM–2110–2'', which is commonly referred to as the ''Manning Rule''), and any interpretive guidance thereunder, to include over-the-counter (''OTC'') equity securities.[3] On September 26, 2006, NASD filed Amendment No. 1 to the proposed rule change, and on October 19, 2006, NASD filed Amendment No. 2 to the proposed rule change.[4] The proposed rule change, as amended, was published for comment in the **Federal Register** on November 9, 2006.[5] The Commission received one comment letter on the proposal, which supported the proposal.[6] On February 6, 2007, the Exchange filed Amendment No. 3 to the proposed rule change.[7] This order provides notice of Amendment No. 3 to the proposed rule change and approves the proposed rule change as modified by Amendment Nos. 2 and 3 on an accelerated basis.

## II. Description of the Proposal

NASD's Manning Rule generally prohibits an NASD member from trading for its own account in an exchange-listed security at a price that is equal to or better than an unexecuted customer limit order in that security, unless the member immediately thereafter executes the customer limit order at the price at which it traded for its own account or better. The legal underpinnings for the Manning Rule are a member's fiduciary obligations and the requirement that a member must, in the conduct of its business, ''observe high standards of commercial honor and just and equitable principles of trade.''[8] IM–2110–2 currently applies to exchange-listed securities,[9] but does not apply to OTC equity securities.

NASD Rule 6541 extends the general principles of the Manning Rule to a subset of OTC equity securities—specifically, those equity securities that are quoted on NASD's OTC Bulletin Board (''OTCBB''). NASD Rule 6541, however, differs from IM–2110–2 in

[1] 15 U.S.C. 78s(b)(1).

[2] 17 CFR 240.19b–4.

[3] *See* NASD Rule 6610(d) (defining ''OTC Equity Security'').

[4] Amendment No. 1 replaced and superseded the original filing in its entirety and Amendment No. 2 replaced and superseded Amendment No. 1 in its entirety.

[5] *See* Securities Exchange Act Release No. 54705 (November 3, 2006), 71 FR 65863 (''Notice'').

[6] *See* Letter from Shane E. Swanson, Director of Compliance, Automated Trading Desk, LLC, to Nancy M. Morris, Secretary, Commission, dated December 29, 2006. Although this letter was not submitted in response to SR–NASD–2005–146, the letter referred to the instant filing and expressed support for NASD's proposal to require the lesser of $0.01 or ½ the spread of price improvement with respect to the implementation of Manning Rule protection to orders priced below $1.00.

[7] The text of Amendment No. 3 is available at NASD, the Commission's Public Reference Room, and *http://www.nasd.com.*

[8] *See* NASD Rule 2110.

[9] *See* Securities Exchange Act Release No. 52210 (August 4, 2005), 70 FR 46897 (August 11, 2005) (SR–NASD–2004–089) (approving the expansion of IM–2110–2, which previously applied only to Nasdaq securities, to exchange-listed securities). *See also* NASD Notice to Members 05–64 (October 2005) (announcing Commission approval of the amendments to IM–2110–2, which became effective on January 2, 2006).

several respects.[10] For example, while IM–2110–2 and NASD Rule 6541 both provide that a member is not deemed to have traded ahead of a customer limit order if the member provides a contemporaneous execution of the customer's order, the two rules differ in how they define ''contemporaneous.''[11] Other differences include the fact that NASD Rule 6541 applies a lower threshold requirement on the value of large-size limit orders for which a member can negotiate specific terms and conditions applicable to the acceptance of such orders[12] and IM–2110–2 excludes marketable limit orders, whereas NASD Rule 6541 provides no such exclusion. In addition, IM–2110–2 generally is applicable from 9:30 a.m. to 6:30 p.m. Eastern Time, whereas NASD Rule 6541 applies only from 9:30 a.m. to 4 p.m. Eastern Time. IM–2110–2 and NASD Rule 6541 also differ in the minimum level of price-improvement that a member must provide to trade ahead of an unexecuted customer limit order;[13] and NASD Rule 6541 does not require, as IM–2110–2 does, that a member that has traded ahead of a customer limit order at a price that is more favorable than the customer limit order price pass along that price improvement to the customer limit order.[14]

In support of its proposal, NASD stated its belief that the distinctions in application between NASD Rule 6541 and IM–2110–2 no longer make sense, and that customer limit orders in OTC equity securities and NMS stocks should be subject to the same order handling and customer protection requirements under the Manning Rule.[15] Accordingly, NASD proposes to expand the scope of IM–2110–2 and any interpretive guidance thereunder to include all OTC equity securities.[16] In addition, NASD proposes to adopt new standards relating to the minimum amount of price improvement necessary in order for a member to execute an incoming order on a proprietary basis when holding an unexecuted limit order in that same security and not be required to execute the held limit order. Specifically, for customer limit orders priced greater than or equal to $1.00 that are at or inside the best inside market, the minimum amount of price improvement required would be $0.01, and for customer limit orders priced less than $1.00 that are at or inside the best inside market, the minimum amount of price improvement required would be the lesser of $0.01 or one-half (½) of the current inside spread. Subsequently, in light of the proposed expansion of IM–2110–2 to cover OTC equity securities, NASD proposes to repeal NASD Rule 6541.

NASD also proposes to delete the obsolete provisions in IM–2110–2 that prescribe the minimum level of price-improvement for securities trading in non-decimalized fractions since equity securities no longer trade in fractions. In addition, NASD proposes to delete obsolete references in IM–2110–2, which limit portions of the Manning Rule's applicability to Nasdaq-listed securities. Finally, given that the definition of ''NMS stock'' in Rule 600(b)(47) of Regulation NMS[17] substantially covers all stocks listed on a national securities exchange, the proposal would replace references to the term ''exchange-listed security'' in IM–2110–2 with the term ''NMS stock.''

The proposal would be subject to delayed effectiveness. In particular, as proposed in the Notice, NASD would announce the effective date of the proposed rule change in a *Notice to Members* to be published no later than 60 days following Commission approval of this proposal. In recognition of the technological and systems changes the proposed rule change may require, NASD has noted that it will set the effective date of the amendments contained in this proposed rule change at 90 days following publication of the *Notice to Members* announcing Commission approval of this filing.

## III. Discussion and Commission Findings

The Commission has reviewed carefully the proposed rule change and the comment letter and finds that the proposed rule change is consistent with the Act and the rules and regulations thereunder applicable to a national securities association, including the provisions of Section 15A(b)(6) of the Act,[18] which requires, among other things, that NASD rules be designed to promote just and equitable principles of trade, to foster cooperation and coordination with persons engaged in regulating, clearing, settling, processing transactions in securities, and, in general, to protect investors and the public interest.[19]

Currently, IM–2110–2 prohibits an NASD member from trading for its own account in an exchange-listed security at a price that is equal to or better than an unexecuted customer limit order in that security, unless the member immediately thereafter executes the customer limit order at the price at which it traded for its own account or better. NASD Rule 6541 extends the general principles of IM–2110–2 to those OTC equity securities that are quoted on the OTCBB. As discussed above, NASD Rule 6541, however, differs from IM–2110–2 in several respects, including the applicable trading hours, time limits for ''contemporaneous'' executions, and the threshold for individually-negotiable large-size orders. NASD's proposal would revise IM–2110–2 to include OTC equity securities. The Commission believes that NASD's proposal to apply the Manning Rule's limit order protection requirements uniformly to NMS stocks and OTC equity securities is appropriate and should benefit customers who submit limit orders for OTC equity securities.

NASD also proposes to amend the provisions relating to the amount of price-improvement necessary in order

[10] *See* Notice, *supra* note 5 (for a detailed discussion of the differences between NASD Rule 6541 and IM–2110–2).

[11] For the purposes of IM–2110–2, contemporaneous has been interpreted to require execution as soon as possible, but absent reasonable and documented justification, within one minute. *See* NASD Notices to Members 95–67 (August 1995) and 98–78 (September 1998). In contrast, NASD Rule 6541(d) provides that the contemporaneous execution should occur as soon as practicable, but in no event more than five minutes after the member has traded at a price superior to the held customer limit order. *See* NASD Notice to Members 01–46 (July 2001).

[12] Specifically, NASD Rule 6541(c) only requires that an order be 10,000 shares or more and greater than $20,000 in value, while IM–2110–2 requires that an order be 10,000 shares or more and greater than $100,000 in value.

[13] Specifically, the price-improvement standard currently set forth in IM–2110–2 provides that, where a member is holding a customer limit order priced at or inside the inside market displayed in Nasdaq, the member may execute an incoming order on a proprietary basis without being obligated to execute the customer limit order if the member executes the incoming order at least $0.01 better than the price of the customer limit order. Further, if the customer limit order is priced outside the inside market displayed in Nasdaq, then the member must execute the incoming order at the next superior minimum quotation increment permitted by Nasdaq (currently $0.01). In contrast, NASD Rule 6541 provides that if the customer limit order is priced at or inside the current inside market, the price improvement is a minimum of the lesser of $0.01 or one-half (½) of the current inside spread.

[14] *See* Securities Exchange Act Release No. 52210 (August 4, 2005), 70 FR 46897 (August 11, 2005) (SR–NASD–2004–089). *See also* NASD Notice to Members 05–64 (October 2005).

[15] *See* Notice, *supra* note 5, at 71 FR 65865.

[16] NASD states that the term ''OTC equity securities'' does not include options. *See* NASD Rule 6610(d) (defining OTC equity security as any non-exchange-listed security and certain exchange-listed securities that do not otherwise qualify for real-time trade reporting).

[17] 17 CFR 242.600(b)(47).

[18] 15 U.S.C. 78*o*–3(b)(6).

[19] In approving this proposed rule change, as amended, the Commission notes that it has considered the proposed rule's impact on efficiency, competition, and capital formation. *See* 15 U.S.C. 78c(f).

for a member to execute an incoming order on a proprietary basis when holding an unexecuted customer limit order in that same security. The proposal would revise and make uniform the minimum price-improvement standards for all NMS stocks and OTC equity securities.[20] With respect to the minimum level of price-improvement that a member must provide in order to trade ahead of an unexecuted customer limit order,[21] NASD proposes that, for customer limit orders priced greater than or equal to $1.00 that are at or inside the inside market, the minimum amount of price improvement required would be $0.01. For customer limit orders priced less than $1.00 that are at or inside the inside market, the minimum amount of price improvement required would be the lesser of $0.01 or one-half (½) of the current inside spread. For customer limit orders priced outside the inside market, the member would be required to execute the incoming order at a price at or inside the inside market for the security. Lastly, for customer limit orders in securities for which there is no published inside market, the minimum amount of price improvement required is $0.01. The Commission believes that the proposed uniform price improvement standards are appropriate and reasonably designed to protect customer limit orders in both NMS stocks and OTC equity securities. The Commission also believes that the proposal is reasonably designed to remove obsolete references to price improvement standards in non-decimalized fractions, as well as references to portions of the Manning Rule that were formerly applicable only to securities quoted on Nasdaq.

For the reasons described above, the Commission believes that NASD's proposed rule change promotes the protection of investors and the public interest by expanding the scope of IM–2110–2 to apply to NMS stocks and OTC equity securities. Further, in expanding the application of Manning obligations under IM–2110–2 to include OTC equity securities and establishing uniform standards for both NMS stocks and OTC equity securities, the Commission believes that the proposal will enhance the opportunity for investors to receive superior-priced limit order executions in OTC equity securities.

NASD has requested that the Commission find good cause for approving the proposed rule change prior to the thirtieth day after the date of publication of notice of Amendment No. 3 in the **Federal Register**. In Amendment No. 3, NASD requested that the Commission grant permanent approval of the price-improvement standards for decimalized securities contained in IM–2110–2 that currently apply on a pilot basis.[22] The Commission notes that the proposal, as modified by Amendment No. 2, was published for notice and comment,[23] and that the Commission received one comment letter in support of the proposal.[24] Amendment No. 3 simply seeks to clarify the status of the provision of IM–2110–2 concerning price improvement standards for decimalized securities, which is proposed to be amended as part of the instant proposed rule change. The Commission believes that permanent approval of the pilot is appropriate because the minimum price improvement standards, including the revisions contained in the instant proposed rule change, are reasonably designed to protect customer limit orders in both NMS stocks and OTC equity securities. In addition, the Commission does not believe that Amendment No. 3 raises any new or novel issues. Based on the above, the Commission finds good cause to accelerate approval of the proposed rule change, as modified by Amendment Nos. 2 and 3.

## IV. Solicitation of Comments

Interested persons are invited to submit written data, views, and arguments concerning the foregoing, including whether the proposed rule change is consistent with the Act. Comments may be submitted by any of the following methods:

*Electronic Comments*

- Use the Commission's Internet comment form (*http://www.sec.gov/rules/sro.shtml*); or
- Send an e-mail to *rule-comments@sec.gov*. Please include File Number SR–NASD–2005–146 on the subject line.

*Paper Comments*

- Send paper comments in triplicate to Nancy M. Morris, Secretary, Securities and Exchange Commission, 100 F Street, NE, Washington, DC 20549–1090.

All submissions should refer to File Number SR–NASD–2005–146. This file number should be included on the subject line if e-mail is used. To help the Commission process and review your comments more efficiently, please use only one method. The Commission will post all comments on the Commission's Internet Web site (*http://www.sec.gov/rules/sro.shtml*). Copies of the submission, all subsequent amendments, all written statements with respect to the proposed rule change that are filed with the Commission, and all written communications relating to the proposed rule change between the Commission and any person, other than those that may be withheld from the public in accordance with the provisions of 5 U.S.C. 552, will be available for inspection and copying in the Commission's Public Reference Room. Copies of the filing also will be available for inspection and copying at the principal office of NASD. All comments received will be posted without change; the Commission does not edit personal identifying information from submissions. You should submit only information that you wish to make available publicly. All submissions should refer to File Number SR–NASD–2005–146 and should be submitted on or before March 26, 2007.

## V. Conclusion

*It is therefore ordered*, pursuant to Section 19(b)(2) of the Act,[25] that the proposed rule change (SR–NASD–2005–146), as modified by Amendment Nos. 2 and 3, be, and hereby is, approved on an accelerated basis.

For the Commission, by the Division of Market Regulation, pursuant to delegated authority.[26]

**Florence E. Harmon,**

*Deputy Secretary.*

[FR Doc. E7–3748 Filed 3–2–07; 8:45 am]

**BILLING CODE 8010–01–P**

[20] NASD also proposes to delete the provisions in IM–2110–2 that prescribe the minimum level of price-improvement for securities trading in non-decimalized fractions since equity securities no longer trade in fractions. In addition, NASD proposes to delete references in IM–2110–2, which limit portions of the Manning Rule's applicability to Nasdaq-listed securities.

[21] The Manning Rule provides that a member is not deemed to have traded ahead of a customer limit order if the member provides a contemporaneous execution of the customer's order.

[22] *See* Securities Exchange Act Release No. 44165 (April 6, 2001), 66 FR 19268 (April 13, 2001) (SR–NASD–2001–27). *See also* Securities Exchange Act Release No. 54953 (December 18, 2006), 71 FR 77429 (December 26, 2006) (SR–NASD–2006–134) (extending the pilot until June 30, 2007).

[23] *See* Notice, *supra* note 5.

[24] *See supra* note 6 (citing to the comment letter).

[25] 15 U.S.C. 78s(b)(2).

[26] 17 CFR 200.30–3(a)(12).

## SECURITIES AND EXCHANGE COMMISSION

**[Release No. 34–55360; File No. SR–NASD–2007–006]**

## Self-Regulatory Organizations; National Association of Securities Dealers, Inc.; Notice of Filing and Immediate Effectiveness of Proposed Rule Change Relating to Fees for Filing Documents Pursuant to the Corporate Financing Rule

February 27, 2007.

Pursuant to Section 19(b)(1) of the Securities Exchange Act of 1934 (''Act''),[1] and Rule 19b–4 thereunder,[2] notice is hereby given that on January 24, 2007, the National Association of Securities Dealers, Inc. (''NASD'') filed with the Securities and Exchange Commission (''Commission'') the proposed rule change as described in Items I, II and III below, which Items have been prepared substantially by NASD. NASD has designated this proposal as establishing or changing a due, fee, or other charge imposed by a self-regulatory organization pursuant to Section 19(b)(3)(A) of the Act,[3] and Rule 19b–4(f)(2) thereunder,[4] which renders the proposal effective upon filing with the Commission. The Commission is publishing this notice to solicit comments on the proposed rule change from interested persons.

### I. Self-Regulatory Organization's Statement of the Terms of Substance of the Proposed Rule Change

NASD is proposing to amend Section 7 of Schedule A to the NASD By-Laws to adjust fees for filing documents pursuant to NASD Rule 2710 (Corporate Financing Rule—Underwriting Terms and Arrangements). The text of the proposed rule change is available at NASD, the Commission's Public Reference Room, and *http://www.nasd.com/RulesRegulation/RuleFilings.*

### II. Self-Regulatory Organization's Statement of the Purpose of, and Statutory Basis for, the Proposed Rule Change

In its filing with the Commission, NASD included statements concerning the purpose of and basis for the proposed rule change and discussed any comments it received on the proposed rule change. The text of these statements may be examined at the places specified in Item IV below. NASD has prepared summaries, set forth in Sections A, B, and C below, of the most significant aspects of such statements.

*A. Self-Regulatory Organization's Statement of the Purpose of, and Statutory Basis for, the Proposed Rule Change*

1. Purpose

Under Section 7 of Schedule A to the NASD By-Laws, the current fee for filing offering documents with NASD pursuant to Rule 2710 (Corporate Financing Rule—Underwriting Term and Arrangements) is equal to $500 plus .01% of the proposed maximum aggregate offering price or other applicable value of all securities registered, but not to exceed $75,500.[5] However, pursuant to the Commission's securities offering reform rulemaking (''Securities Offering Reform''),[6] which became effective on December 1, 2005, Commission rules now permit, among other things, ''well-known seasoned issuers'' or ''WKSIs'' to file automatically effective shelf registration statements without specifying the amount or value of the securities that may be offered off the registration statement for up to three years. WKSIs are large issuers that generally must have either $700 million of worldwide equity market capitalization or an aggregate of $1 billion of non-convertible securities issued within the past three years.[7]

Most WKSIs are exempt from the shelf offering filing requirements under NASD Rule 2710(b)(7), which exempts an issuer that is eligible to use a Form S–3 or Form F–3 registration statement and has been a reporting company under Section 13(a) or 15(d) of the Act for at least 36 months. In addition, NASD has proposed amendments to Rule 2710 to expressly exempt WKSI shelf registration statements from the filing requirements of Rule 2710.[8] Thus, NASD intends that only those WKSIs with a conflict of interest as defined under Rule 2720 will be required to file shelf registration statements with NASD.[9] For these issuers filing documents with NASD pursuant to Rule 2720, NASD will review the proposed underwriting terms and arrangements to determine whether they comply with the substantive requirements of the rule, including limits on underwriting compensation and use of a qualified independent underwriter to provide a pricing opinion and conduct due diligence. Upon completion of the review, if the terms and arrangements comply with the rule, NASD will issue an opinion that it has no objection to the filing.

Section 7 of Schedule A to the NASD By-Laws provides that the fee imposed for filing documents required pursuant to Rule 2710 is based on the proposed maximum aggregate offering price or other applicable value of all securities registered on a Commission registration statement or included on any other type of offering document. However, because WKSIs are not required to specify a proposed maximum aggregate offering price or other applicable value on a registration statement, assessing NASD's fee has been problematic. In their filings pursuant to Rule 2710, most WKSIs provided a value of securities that will be offered at or above $750 million, corresponding with the maximum filing fee. Since the Commission's Securities Offering Reform has been in effect, NASD has received 71 WKSI filings, of which 62 (or 87%) have provided a value of $750 million or more.[10] Nine (or 13%) have specified amounts of securities with an aggregate value of less than $750 million; however, these issuers are eligible to amend their registration during the three year effective period to increase the value of securities registered. Given this activity, and the fact that a WKSI shelf registration filing allows the issuer to offer securities on a registration statement for a three year period in amounts above $750 million, NASD is imposing the maximum filing fee on all WKSI filings.[11]

[1] 15 U.S.C. 78s(b)(1).

[2] 17 CFR 240.19b–4.

[3] 15 U.S.C. 78s(b)(3)(A).

[4] 17 CFR 240.19b–4(f)(2).

[5] Thus, under Section 7 of Schedule A to the NASD By-Laws, fees are capped with respect to offerings with an aggregate offering price of $750 million or more.

[6] *See* Securities Exchange Act Release No. 52056 (July 19, 2005), 70 FR 44722 (August 3, 2005).

[7] *See* Rule 405 under the Securities Act of 1933, 17 C.F.R. 230.405.

[8] *See* SR–NASD–2004–022. Amendment No. 4 to SR–NASD–2004–022 was filed with the Commission on April 28, 2006. *See* Securities Exchange Act Release No. 50749 (November 29, 2004), 69 FR 70735 (December 7, 2004).

[9] *See* NASD Rule 2720(m). Pursuant to Rule 2720(m), all offerings that are within the scope of Rule 2720 are required to be filed with NASD and have the fee paid as required by Rule 2710, even if the offering would be otherwise exempt from Rule 2710.

[10] As noted above, under Commission rules, a WKSI registration statement is not required to state a specific value of securities. Nevertheless, for purposes of NASD's filing requirements, a value must be provided, and most issuers have indicated that they intend to offer at least $750 million.

[11] NASD's electronic filing system does not track subsequent amendments to WKSI registration statements to determine whether new securities have been registered by an amendment, thereby increasing the size of the offering. Moreover, if multiple members participate in takedowns of securities off of a WKSI shelf registration statement over time, no one member would have the ability to track the aggregate value of the securities sold by the multiple members and ensure that the proper filing fee is paid in connection with the offerings.

Accordingly, NASD proposes to amend Section 7 of Schedule A to the NASD By-Laws expressly to require that offering documents that are required to be filed with NASD relating to an automatically effective shelf registration statement by a WKSI (which would currently include all WKSIs not otherwise exempt from Rule 2710 and, if SR–NASD–2004–022 is approved by the Commission, would only include WKSIs that are broker-dealers or affiliates of broker-dealers) [12] must be accompanied by a $75,500 fee.

NASD has filed the proposed rule change for immediate effectiveness. The implementation date will be February 26, 2007.

2. Statutory Basis

NASD believes that the proposed rule change is consistent with Section 15A(b)(5) [13] of the Act, which requires that NASD rules provide for the equitable allocation of reasonable dues, fees, and other charges among members and issuers and other persons using any facility or system that NASD operates or controls. NASD believes that the proposed rule change, which specifies the filing fee required for shelf offerings by WKSIs where no proposed maximum aggregate offering or other applicable value of all securities registered is required to be stated, is necessary to ensure the appropriate review of offerings by WKSIs under NASD rules.

*B. Self-Regulatory Organization's Statement on Burden on Competition*

NASD does not believe that the proposed rule change will impose any burden on competition that is not necessary or appropriate in furtherance of the purposes of the Act.

*C. Self-Regulatory Organization's Statement on Comments on the Proposed Rule Change Received From Members, Participants or Others NASD has neither solicited nor received comments on the proposed rule change.*

**III. Date of Effectiveness of the Proposed Rule Change and Timing for Commission Action**

The foregoing rule change has become effective pursuant to Section 19(b)(3)(A) of the Act [14] and subparagraph (f)(2) of Rule 19b–4 thereunder [15] in that it establishes or changes a due, fee, or other charge imposed by NASD. At any time within 60 days of the filing of such proposed rule change, the Commission may summarily abrogate such rule change if it appears to the Commission that such action is necessary or appropriate in the public interest, for the protection of investors, or otherwise in furtherance of the purposes of the ct.[16]

**IV. Solicitation of Comments**

Interested persons are invited to submit written data, views, and arguments concerning the foregoing, including whether the proposed rule change is consistent with the Act. Comments may be submitted by any of the following methods:

*Electronic Comments*

- Use the Commission's Internet comment form (*http://www.sec.gov/rules/sro.shtml*); or
- Send an e-mail to *rule-comments@sec.gov.* Please include File Number SR–NASD–2007–006 on the subject line.

*Paper Comments*

- Send paper comments in triplicate to Nancy M. Morris, Secretary, Securities and Exchange Commission, 100 F Street, NE., Washington, DC 20549–1090.

All submissions should refer to File Number SR–NASD–2007–006. This file number should be included on the subject line if e-mail is used. To help the Commission process and review your comments more efficiently, please use only one method. The Commission will post all comments on the Commission's Internet Web site (*http://www.sec.gov/rules/sro.shtml*). Copies of the submission, all subsequent amendments, all written statements with respect to the proposed rule change that are filed with the Commission, and all written communications relating to the proposed rule change between the Commission and any person, other than those that may be withheld from the public in accordance with the provisions of 5 U.S.C. 552, will be available for inspection and copying in the Commission's Public Reference Room. Copies of the filing also will be available for inspection and copying at the principal offices of NASD. All comments received will be posted without change; the Commission does not edit personal identifying information from submissions. You should submit only information that you wish to make available publicly. All submissions should refer to File Number SR–NASD–2007–006 and should be submitted on or before March 26, 2007.

For the Commission, by the Division of Market Regulation, pursuant to delegated authority.[17]

**Florence E. Harmon,**

*Deputy Secretary.*

[FR Doc. E7–3762 Filed 3–2–07; 8:45 am]

BILLING CODE 8010–01–P

[12] Telephone conversation between Kathryn Moore, Assistant General Counsel, NASD, and Commission staff on February 26, 2007.

[13] 15 U.S.C. 78*o*–3(b)(5).

[14] 15 U.S.C. 78s(b)(3)(A).

[15] 17 CFR 240.19b–4(f)(2).

[16] *See* 15 U.S.C. 78s(b)(3)(C).

[17] 17 CFR 200.30–3(a)(12).

## SECURITIES AND EXCHANGE COMMISSION

**[Release No. 34–55343; File No. SR–NYSE–2007–12]**

## Self-Regulatory Organizations; New York Stock Exchange LLC; Notice of Filing of Proposed Rule Change and Amendment No. 1 Thereto To Amend Section 703.16 of the NYSE Listed Company Manual To Eliminate Requirement Regarding Index Calculation Methodology

February 23, 2007.

Pursuant to Section 19(b)(1) of the Securities Exchange Act of 1934 (''Act'') [1] and Rule 19b–4 thereunder,[2] notice is hereby given that on February 5, 2007 the New York Stock Exchange LLC (''NYSE'' or ''Exchange'') filed with the Securities and Exchange Commission (''Commission'') the proposed rule change as described in Items I, II, and III below, which Items have been substantially prepared by the Exchange. On February 15, 2007, the Exchange filed Amendment No. 1 to the proposed rule change. The Commission is publishing this notice to solicit comments on the proposed rule change, as amended, from interested persons.

**I. Self-Regulatory Organization's Statement of the Terms of Substance of the Proposed Rule Change**

The Exchange proposes to amend Section 703.16 of the NYSE Listed Company Manual (''Manual''), the Exchange's generic listing standard for investment company units (''ICUs''), to eliminate the requirement that the calculation methodology for the index underlying a series of ICUs must be one of those enumerated in Section 703.16(C)(4)(a). The proposed rule text is available at the NYSE, the Commission's Public Reference Room, and *http://www.nyse.com.*

[1] 15 U.S.C.78s(b)(1).

[2] 17 CFR 240.19b–4.

## II. Self-Regulatory Organization's Statement of the Purpose of, and Statutory Basis for, the Proposed Rule Change

In its filing with the Commission, the Exchange included statements concerning the purpose of and basis for the proposed rule change. The text of these statements may be examined at the places specified in Item IV below. The NYSE has prepared summaries, set forth in sections A, B, and C below, of the most significant aspects of such statements.

*A. Self-Regulatory Organization's Statement of the Purpose of, and Statutory Basis for, the Proposed Rule Change*

1. Purpose

The Exchange proposes to amend Section 703.16 of the Manual, which includes the Exchange's generic listing standard for ICUs (which include exchange-traded funds), to eliminate the requirement that the calculation methodology for the index underlying a series of ICUs must be one of those enumerated in section 703.16(C)(4)(a). This Amendment No. 1 replaces the Exchange's initial filing in its entirety.

The Exchange has adopted listing standards applicable to ICUs which are consistent with the listing criteria currently used by other national securities exchanges, and trading standards pursuant to which the Exchange may either list and trade ICUs or trade such ICUs on the Exchange on an unlisted trading privileges (''UTP'') basis.[3] An ICU is defined in Section 703.16 of the Manual as a security that represents an interest in a registered investment company that could be organized as a unit investment trust, an open-end management investment company, or a similar entity. A registered investment company is registered under the Investment Company Act of 1940.[4]

The ''generic'' listing criteria of Section 703.16 of the Manual permit listing of ICUs that satisfy such criteria in reliance upon Rule 19b–4(e) under the Act,[5] without a filing pursuant to Rule 19b–4 under the Act. Section 703.16(C)(4)(a) of the Manual requires, among other criteria, that, if a series of ICUs is listed for trading on the Exchange in reliance upon Rule 19b–4(e), the index underlying the series must follow one of these calculation weighting methodologies: Market capitalization, modified market capitalization, price, equal-dollar, or modified equal-dollar weighting methodology or a methodology weighting components of the index based on any, some or all of the following: Sales, cash flow, book value and dividends.

The Exchange proposes to delete Section 703.16(C)(4)(a) and thereby eliminate the calculation methodology limitation.[6] In recent years, academics and market professionals have explored and defined a growing list of innovations in index construction. Most recently, the Commission approved amendments to the generic listing criteria to accommodate new index weighting methodologies based on ranking companies by financial data such as sales, cash flow, book value and dividends.[7] The Exchange believes there are multiple ways for indexes to be constructed to serve useful market purposes. Additional methodologies are under active development by academics and market professionals and permitting only certain specified index weighting methods does not take into account the rapid innovation in this area. The Exchange believes that, with respect to ICUs listed pursuant to Rule 19b–4(e), applying the numerical weighting and liquidity criteria and index dissemination requirements in Section 703.16, without imposing constraints on the index methodology, will provide greater flexibility to indexers and ICU issuers to develop indexes that meet the investment objectives of investors. In addition, the proposed rule change would allow ICUs based on a non-traditional weighting methodology to be brought to market more quickly, thereby reducing burdens on ICU issuers and other market participants and promoting competition.

The Exchange notes that the numerical criteria in Section 703.16 already define the concentration limits, diversity requirements and liquidity requirements of the companies in the underlying index. For example, the generic listing standards for domestic indexes require, among other things, that an index include at least 13 stocks, that the most heavily weighted component stock of an index cannot exceed 30% of the index weight and the five most heavily weighted component stocks of an index cannot exceed 65% of the index weight. The generic listing standards for international or global indexes require, among other things, that the index include at least 20 component stocks, that the most heavily weighted index component stock cannot exceed 25% of the index weight, and the five most heavily weighted component stocks cannot exceed 60% of the index weight. ICUs and their underlying indexes would continue to be subject to all other requirements of Section 703.16 of the Manual. Under these circumstances, the Exchange believes that removal of the index weighting requirements of Section 703.16(C)(4)(a) will not compromise investor protection.

2. Statutory Basis

The proposed rule change is consistent with Section 6(b)[8] of the Act in general and furthers the objectives of Section 6(b)(5)[9] in particular in that it is designed to prevent fraudulent and manipulative acts and practices, to promote just and equitable principles of trade, to remove impediments to, and perfect the mechanism of a free and open market and, in general, to protect investors and the public interest.

*B. Self-Regulatory Organization's Statement on Burden on Competition*

The Exchange does not believe that the proposed rule change will impose any burden on competition that is not necessary or appropriate in furtherance of the purposes of the Act.

*C. Self-Regulatory Organization's Statement on Comments on the Proposed Rule Change Received From Members, Participants or Others*

The Exchange has neither solicited nor received written comments on the proposed rule change.

## III. Date of Effectiveness of the Proposed Rule Change and Timing for Commission Action

Within 35 days of the date of publication of this notice in the **Federal Register** or within such longer period (i) as the Commission may designate up to 90 days of such date if it finds such longer period to be appropriate and publishes its reasons for so finding or (ii) as to which the self-regulatory

[3] In 1996, the Commission approved Section 703.16 of the Listed Company Manual, which sets forth the rules related to the listing of ICUs. *See* Securities Exchange Act Release No. 36923 (March 5, 1996), 61 FR 10410 (March 13, 1996) (SR–NYSE–95–23). In 2000, the Commission also approved the Exchange's generic listing standards for listing and trading, or the trading pursuant to UTP, of ICUs under Section 703.16 of the Listed Company Manual and Exchange Rule 1100. *See* Securities Exchange Act Release No. 43679 (December 5, 2000), 65 FR 77949 (December 13, 2000) (SR–NYSE–2000–46).

[4] 15 U.S.C. 80a.

[5] 17 CFR 240.19b–4(e).

[6] The Exchange also proposes to redesignate current subparagraphs (b) and (c) of Section 703.16(C)(4) as (a) and (b), respectively.

[7] *See* Securities Exchange Act Release No. 54649 (October 24, 2006); 71 FR 63816 (October 31, 2006) (SR–NYSE–2006–88).

[8] 15 U.S.C. 78f(b).

[9] 15 U.S.C. 78f(b)(5).

organization consents, the Commission will:

(A) by order approve the proposed rule change, or

(B) institute proceedings to determine whether the proposed rule change should be disapproved.

The Exchange has requested accelerated approval of this proposed rule change. The Commission has determined that a 15-day comment period is appropriate in this case.

**IV. Solicitation of Comments**

Interested persons are invited to submit written data, views and arguments concerning the foregoing, including whether the proposed rule change, as amended, is consistent with the Act. Comments may be submitted by any of the following methods:

*Electronic Comments*

- Use the Commission's Internet comment form (*http://www.sec.gov/rules/sro.shtml*); or
- Send e-mail to *rule-comments@sec.gov*. Please include File Number SR–NYSE–2007–12 on the subject line.

*Paper Comments*

- Send paper comments in triplicate to Nancy M. Morris, Secretary, Securities and Exchange Commission, 100 F Street, NE., Washington, DC 20549–1090.

All submissions should refer to File Number SR–NYSE–2007–12. This file number should be included on the subject line if e-mail is used. To help the Commission process and review your comments more efficiently, please use only one method. The Commission will post all comments on the Commission's Internet Web site (*http://www.sec.gov/rules/sro/shtml*). Copies of the submission, all subsequent amendments, all written statements with respect to the proposed rule change that are filed with the Commission, and all written communications relating to the proposed rule change between the Commission and any person, other than those that may be withheld from the public in accordance with the provisions of 5 U.S.C. 552, will be available for inspection and copying in the Commission's Public Reference Room. Copies of such filing will also be available for inspection and copying at the principal office of the NYSE. All comments received will be posted without change; the Commission does not edit personal identifying information from submissions. You should submit only information that you wish to make available publicly. All submissions should refer to File number SR–NYSE–2007–12 and should be submitted by March 20, 2007.

For the Commission, by the Division of Market Regulation, pursuant to delegated authority.[10]

**Florence E. Harmon,**

*Deputy Secretary.*

[FR Doc. E7–3741 Filed 3–2–07; 8:45 am]

**BILLING CODE 8010–01–P**

---

## SECURITIES AND EXCHANGE COMMISSION

**[Release No. 34–55345; File No. SR–NYSE–2007–15]**

## Self-Regulatory Organizations; New York Stock Exchange LLC; Notice of Filing of a Proposed Rule Change Regarding the Amendment of NYSE Rule 300 Relating to Trading Licenses

February 26, 2007.

Pursuant to section 19(b)(1) of the Securities Exchange Act of 1934 (''Act'')[1] and rule 19b–4 thereunder,[2] notice is hereby given that on February 13, 2007, the New York Stock Exchange LLC (''NYSE'' or ''Exchange'') filed with the Securities and Exchange Commission (''Commission'') the proposed rule change as described in Items I, II, and III below, which Items have been substantially prepared by NYSE. The Commission is publishing this notice to solicit comments on the proposed rule change from interested persons.

**I. Self-Regulatory Organization's Statement of the Terms of Substance of the Proposed Rule Change**

The Exchange proposes to amend NYSE rule 300 relating to trading licenses to charge a premium of $5,000, for a total annualized rate of $55,000 for those trading licenses purchased after the annual application period.

The text of the proposed rule change is available on NYSE's Web site at *http://www.nyse.com/regulation/rules/1160561784294.html,* at NYSE's principal office, and at the Commission's Public Reference Room.

**II. Self-Regulatory Organization's Statement of the Purpose of, and Statutory Basis for, the Proposed Rule Change**

In its filing with the Commission, the Exchange included statements concerning the purpose of, and basis for, the proposed rule change and discussed any comments it received on the proposal. The text of these statements may be examined at the places specified in Item IV below. The Exchange has prepared summaries, set forth in sections A, B, and C below, of the most significant aspects of such statements.

*A. Self-Regulatory Organization's Statement of the Purpose of, and Statutory Basis for, the Proposed Rule Change*

1. Purpose

The Exchange proposes to amend NYSE rule 300 relating to trading licenses to charge a premium for those trading license purchased after the annual application period. The premium would be $5,000 or 10% above the fixed price of $50,000 per trading license, pro-rated to reflect the amount of time remaining in the year at the time of the commencement of the license. The Exchange believes that there are benefits to itself and to its member organizations in having a more stable trading license population during the course of the calendar year.

The Exchange previously required payment of a premium to encourage participation in a ''Dutch'' auction, but recently eliminated this requirement in connection with its transition away from the use of an auction to set the price of a trading license.[3] The Exchange believes, however, that the requirement of a 10% premium should be reinstated. The Exchange believes that the 10% premium for licenses purchased after the annual application period provides the Exchange with greater predictability regarding the number of trading licenses outstanding during each calendar year. The Exchange represents that this predictability not only facilitates business planning and administration by member organizations and the Exchange, but also reduces both business and regulatory systems changes required to reflect fluctuations in trading licenses issued. The Exchange believes that the premium encouraged member organizations to properly forecast the number of licenses needed by it in the conduct of its business for the upcoming calendar year, which in turn helped the Exchange determine the resources required to administer and monitor trading licenses for the same period and to efficiently prepare systems changes relating to any significant changes in the trading license population required for both business and regulatory purposes. The Exchange believes that the premium

[10] 17 CFR 200.30–3(a)(12).

[1] 15 U.S.C. 78s(b)(1).

[2] 217 CFR 240.19b–4.

[3] Securities Exchange Act Release No. 54998 (December 21, 2006), 71 FR 78496 (December 29, 2006) (SR–NYSE–2006–98).

will also discourage member organizations from surrendering and requesting licenses on a monthly basis and thereby help reduce month-by-month changes in the trading license population.

2. Statutory Basis

The statutory basis for the proposed rule change is the requirement under section 6(b)(4)[4] of the Act that an exchange have rules that provide for the equitable allocation of reasonable dues, fees, and other charges among its members and other persons using its facilities and the requirement under section 6(b)(5)[5] of the Act that an exchange have rules that are designed to prevent fraudulent and manipulative acts and practices, to promote just and equitable principles of trade, to remove impediments to and perfect the mechanism of a free and open market and, in general, to protect investors and the public interest.

*B. Self-Regulatory Organization's Statement on Burden on Competition*

The Exchange does not believe that the proposed rule change would impose any burden on competition that is not necessary or appropriate in furtherance of the purposes of the Act.

*C. Self-Regulatory Organization's Statement on Comments on the Proposed Rule Change Received From Members, Participants, or Others*

Written comments were neither solicited nor received.

**III. Date of Effectiveness of the Proposed Rule Change and Timing for Commission Action**

Within 35 days of the date of publication of this notice in the **Federal Register** or within such longer period (i) as the Commission may designate up to 90 days of such date if it finds such longer period to be appropriate and publishes its reasons for so finding or (ii) as to which NYSE consents, the Commission will:

(A) By order approve such proposed rule change, or

(B) institute proceedings to determine whether the proposed rule change should be disapproved.

**IV. Solicitation of Comments**

Interested persons are invited to submit written data, views, and arguments concerning the foregoing, including whether the proposed rule change is consistent with the Act. Comments may be submitted by any of the following methods:

*Electronic Comments*

- Use the Commission's Internet comment form (*http://www.sec.gov/rules/sro.shtml*); or
- Send an e-mail to *rule-comments@sec.gov.* Please include File Number SR–NYSE–2007–15 on the subject line.

*Paper Comments*

- Send paper comments in triplicate to Nancy M. Morris, Secretary, Securities and Exchange Commission, 100 F Street, NE., Washington, DC 20549–1090.

All submissions should refer to File Number SR–NYSE–2007–15. This file number should be included on the subject line if e-mail is used. To help the Commission process and review your comments more efficiently, please use only one method. The Commission will post all comments on the Commission's Internet Web site (*http://www.sec.gov/rules/sro.shtml*). Copies of the submission, all subsequent amendments, all written statements with respect to the proposed rule change that are filed with the Commission, and all written communications relating to the proposed rule change between the Commission and any person, other than those that may be withheld from the public in accordance with the provisions of 5 U.S.C. 552, will be available for inspection and copying in the Commission's Public Reference Room. Copies of such filing also will be available for inspection and copying at the principal office of NYSE. All comments received will be posted without change; the Commission does not edit personal identifying information from submissions. You should submit only information that you wish to make available publicly. All submissions should refer to File Number SR–NYSE–2007–15 and should be submitted on or before March 26, 2007.

For the Commission, by the Division of Market Regulation, pursuant to delegated authority.[6]

**Florence E. Harmon,**

*Deputy Secretary.*

[FR Doc. E7–3743 Filed 3–2–07; 8:45 am]

**BILLING CODE 8010–01–P**

[4] 15 U.S.C. 78f(b)(4).

[5] 15 U.S.C. 78f(b)(5).

[6] 17 CFR 200.30–3(a)(12).

## SECURITIES AND EXCHANGE COMMISSION

**[Release No. 34–55354; File No. SR–NYSE–2007–04]**

## Self-Regulatory Organizations; New York Stock Exchange LLC; Notice of Filing of Proposed Rule Change Relating to Approval of Fee for NYSE Real-Time Trade Prices

February 26, 2007.

Pursuant to Section 19(b)(1) of the Securities Exchange Act of 1934 (''Act'')[1] and Rule 19b–4 thereunder,[2] notice is hereby given that on January 12, 2007, the New York Stock Exchange LLC (''NYSE'' or ''Exchange'') filed with the Securities and Exchange Commission (''Commission'') the proposed rule change as described in Items I, II, and III below, which Items have been substantially prepared by the NYSE. The Commission is publishing this notice to solicit comments on the proposed rule change from interested persons.

**I. Self-Regulatory Organization's Statement of the Terms of Substance of the Proposed Rule Change**

The Exchange proposes to establish as a one-year pilot test NYSE Real-Time Trade Prices, a new NYSE-only market data service that allows a vendor to redistribute on a real-time basis last sale prices of transactions that take place on the Exchange (''NYSE Trade Prices'') and to establish a flat monthly fee for that service.

**II. Self-Regulatory Organization's Statement of the Purpose of, and Statutory Basis for, the Proposed Rule Change**

In its filing with the Commission, the Exchange included statements concerning the purpose of, and basis for, the proposed rule change and discussed any comments it received on the proposed rule change. The text of these statements may be examined at the places specified in Item IV below. The Exchange has prepared summaries, set forth in sections A, B, and C below, of the most significant aspects of such statements.

*A. Self-Regulatory Organization's Statement of the Purpose of, and Statutory Basis for, the Proposed Rule Change*

1. Purpose

i. *The Service.* The Exchange proposes to conduct a one-year pilot program that

[1] 15 U.S.C. 78s(b)(1).

[2] 17 CFR 240.19b–4.

will allow the Exchange to test the viability of NYSE Real-Time Trade Prices. The Exchange intends for the NYSE Real-Time Trade Prices service to accomplish three goals:

a. To provide a low-cost service that will make real-time prices widely available to many millions of casual investors;

b. to provide vendors with a real-time substitute for delayed prices; and

c. to relieve vendors of all administrative burdens.

During the one-year pilot program, the NYSE Real-Time Trade Prices service would allow internet service providers, traditional market data vendors, and others (''NYSE-Only Vendors'') to make available NYSE Trade Prices on a real-time basis.[3] The NYSE Real-Time Trade Prices information would include last sale prices for all securities that are traded on the Exchange. It would include only prices. It would not include the size of each trade and would not include bid/asked quotations.

As with most of its market data products, the Exchange is proposing to conduct the one-year pilot program for NYSE Real-Time Trade Prices to respond to the desires of its constituents. In this case, the product responds to the requirements for distribution of real-time last sale prices over the Internet for reference purposes, rather than as a basis for making trading decisions. The Exchange contemplates that internet service providers with a substantial customer base and traditional vendors with large numbers of less active investors are potential subscribers to NYSE Real-Time Trade Prices.

Many internet service providers and vendors distribute data to large numbers of casual market data consumers, who access the data in order to ''get a feel'' for the market in a security or to price the value of a portfolio, rather than to make investment decisions. The Exchange has designed the NYSE Real-Time Trade Prices service to appeal to that community, significant segments of which have historically relied upon delayed last sale prices. That is, the Exchange believes that NYSE Real-Time Trade Prices will replace delayed last sale prices for many casual investors.

During the one-year pilot program, the Exchange will not permit NYSE-Only Vendors to provide NYSE Trade Prices in a context in which a trading or order-routing decision can be implemented unless the NYSE-Only Vendor also provides consolidated displays of Network A last sale prices available in an equivalent manner, as Rule 603(c)(1) of Regulation NMS requires.

During our discussions with potential vendors, vendors requested NYSE real-time, last sale prices for widespread internet distribution, but wanted to eliminate the administrative burdens associated with the current distribution of real-time CTA prices. In addition, because these vendor services do not support trading or order routing functionality, the vendors do not require, nor do they wish to pay for, the full spectrum of consolidated CTA information. At the same time, they recognize the quality and branding value of an NYSE print. In response, the NYSE Trade Price pilot program features a flat, fixed monthly vendor fee, no user-based fees, no vendor reporting requirements, and no professional or non-professional subscriber agreements.

The Commission and the industry have long recognized CTA's success in making market data available on an affordable and widespread basis to a large number of investors. NYSE's proposed pilot program will test out a potential supplement to CTA's success, as the pilot program will make NYSE Trade Prices widely available and without charge to an even larger universe of investors.

ii. *The Fees.* For the duration of the one-year pilot program, the Exchange proposes to establish a monthly flat fee that will entitle an NYSE-Only Vendor to receive access to the NYSE Real-Time Trade Prices datafeed. The NYSE-Only Vendor may use that access to provide unlimited NYSE Trade Prices to an unlimited number of the NYSE-Only Vendor's subscribers and customers. It may also syndicate the service to an unlimited number of other Web site proprietors (as described below). The Exchange will not impose any device or end-user fee for the NYSE-Only Vendors' distribution of NYSE Trade Prices.

The Exchange proposes to set the flat fee at $100,000 per month. The NYSE-Only Vendor would agree to identify the NYSE trade price by placing the text ''NYSE Data'' in close proximity to the display of each NYSE Trade Price or series of NYSE Trade Prices.

The flat fee enables the NYSE-Only Vendor to make NYSE Trade Prices available without having to differentiate between professional subscribers and nonprofessional subscribers, without having to account for the extent of access to the data, and without having to report the number of users.

The flat fee enables internet service providers and traditional vendors that have large numbers of casual investors as subscribers and customers to contribute to the Exchange's operating costs in a manner that is appropriate for their means of distribution.

In setting the level of the NYSE Real-Time Trade Prices pilot program fees, the Exchange took into consideration several factors, including:

a. Consultation with some of the entities that the Exchange anticipates will be the most likely to take advantage of the proposed fees;

b. the contribution of market data revenues that the Exchange's independent Board of Directors believes is appropriate for entities that provide market data to large numbers of investors, which are the entities most likely to take advantage of the proposed fees;

c. the contribution that revenues accruing from the proposed fees will make to meeting the overall costs of the Exchange's operations;

d. projected losses to the Exchange's other sources of market data revenues (*e.g.*, from its share of revenues derived from Network A nonprofessional subscriber fees), which losses are likely to result from the ability of NYSE-Only Vendors to distribute unlimited quantities of NYSE Trade Prices to an unlimited number of investors at no cost to the investors;

e. the savings in administrative and reporting costs that the NYSE Real-Time Trade Prices service will provide to NYSE-Only Vendors; and

f. the fact that the proposed fees provide an alternative to existing Network A fees under the CTA Plan, an alternative that vendors will purchase only if they determine that the perceived benefits outweigh the cost.

In short, the Exchange believes that the proposed NYSE Real-Time Trade Prices pilot program fees would reflect an equitable allocation of its overall costs to users of its facilities.

iii. *Contracts.* After consultation with potential NYSE-Only Vendors, the Exchange has determined to allow NYSE-Only Vendors to provide NYSE Real-Time Trade Prices to their subscribers and customers without requiring the end-users to enter into contracts for the benefit of the Exchange. This pilot program marks the first real-time interrogation service for which the Exchange has not required end-users to enter into agreements.

Instead, the Exchange will require NYSE-Only Vendors to provide a readily visible hyperlink that will send the end-user to a warning notice about the end-user's receipt and use of market data. The notice would be similar to the

[3] The Exchange notes that it will make the NYSE Trade Prices available to vendors no earlier than it makes those prices available to the processor under the CTA Plan.

notice that vendors provide today when providing CTA delayed data services.

The Exchange will require NYSE-Only Vendors to enter into the form of ''vendor'' agreement into which the CTA and CQ Plans require recipients of the Network A datafeeds to enter (the ''Network A Vendor Form''). The Network A Vendor Form will authorize the NYSE-Only Vendor to provide the NYSE Real-Time Trade Prices service to its subscribers and customers.

The Network A Participants drafted the Network A Vendor Form as a one-size-fits-all form to capture most categories of market data dissemination. It is sufficiently generic to accommodate NYSE Real-Time Trade Prices. The Commission has approved the Network A Vendor Form. [4]

The Exchange will supplement the Network A Vendor Form with an Exhibit C that will provide above-described terms and conditions that are unique to the NYSE Real-Time Trade Prices service. The supplemental terms will govern such things as the restriction against providing the service in the context of a trading or order-routing service, the replacement of end-user agreements with a hyperlink to a notice, the substance of the notice, the ''NYSE Data'' labeling requirement and the NYSE-Only Vendor's obligation to impose the below-described Syndication Requirements on other Web site proprietors. In addition, Exhibit C will specify that the NYSE-Only Vendor's authorization to provide the service will terminate at the expiration date of the pilot program unless the Exchange submits a proposed rule change to extend the program or to make it permanent and the Commission approves that proposed rule change. Finally, because of the experimental nature of the program, Exhibit C will require NYSE-Only Vendors to share with the Exchange any research they may conduct regarding the pilot program or the results of their experience with the program and to consult with the Exchange regarding their views of NYSE Real-Time Trade Prices.

iv. *Syndication.* In addition to allowing an NYSE-Only Vendor to make NYSE Trade Prices available on its Web site, the pilot program will also allow NYSE-Only Vendors to syndicate the service by arranging with other Web site proprietors to link any such other proprietor's Web site to the NYSE-Only Vendor's NYSE Trade Prices service. NYSE will allow NYSE-Only Vendors to syndicate their NYSE Trade Price services in this manner at no additional charge to the NYSE-Only Vendor or to the other Web site proprietors, subject to the following ''Syndication Requirements'':

a. Each other Web site proprietor must provide the same readily visible hyperlink that the NYSE-Only Vendor must provide on its Web site: The hyperlink that will send the end-user to a warning notice about the end-user's receipt and use of market data.

b. Each other Web site proprietor must identify the NYSE trade price by placing the text ''NYSE Data'' in close proximity to the display of each NYSE Trade Price or series of NYSE Trade Prices, just as NYSE proposes to require NYSE–Only Vendors to do.

c. Each other Web site proprietor must identify the NYSE–Only Vendor as the source of the NYSE Trade Price data in close proximity to the display of each NYSE Trade Price or series of NYSE Trade Prices.

d. Each other Web site proprietor must agree not to provide NYSE Trade Prices in a context in which a trading or order-routing decision can be implemented unless the other Web site proprietor also provides consolidated displays of Network A last sale prices available in an equivalent manner.

v. *Duration of Pilot Program.* The innovative nature of the pricing structure for NYSE Real-Time Trade Prices and the absence of administrative requirements pose potential regulatory and financial risks for both the Exchange and its customers.

On the regulatory side, in Rule 603(c)(1), the Commission specifies that unconsolidated data should not support trading and order routing functionality. The Exchange agrees with the Commission. It would be inappropriate for market professionals and investors to base trading and order-routing decisions and investment advice on one market's last sale prices, which last sale prices exclude national best bids and offers, sizes and other data elements. The Exchange did not design the NYSE Real-Time Trade Prices service for the purposes of trading and order-routing decisions and investment advice, yet the Exchange is concerned about its ability to monitor and prevent those unintended uses.

On the financial side, the Exchange designed NYSE Real-Time Trade Prices as a low-cost service that will make real-time prices widely available to many millions of casual investors, will allow vendors to replace delayed prices services with real-time services, and will relieve vendors of all administrative burdens. However, the Exchange is concerned about the potential financial risk associated with market participants' use of NYSE Real-Time Trade Prices for the unintended purposes described above.

Therefore, the Exchange proposes to test the NYSE Real-Time Trade Prices service for one year. The Exchange proposes to commence the pilot program at the end of the month in which the Commission approves the proposed rule change and to end the program one year from that date. During that year, the Exchange will closely monitor the use of the NYSE Real-Time Trade Prices service, including for any unintended uses of the product. Among other functions, the Exchange will consult with NYSE–Only vendors, will monitor the impact of the program on other market data services, will examine any abuses arising from the absence of contractual relationships with end-users and will assess whether the flat fee is set at the appropriate level and whether a different pricing metric would be preferable.

Prior to the end of the one-year period, the Exchange will assess its experience with the product. It either will submit a proposed rule change that seeks to extend or modify the pilot program or to make it permanent, or will announce publicly that it does not seek to extend the pilot program beyond the one-year termination date.

2. Statutory Basis

The Exchange believes that its proposal is consistent with Section 6(b) of the Act [5] in general, and furthers the objectives of Section 6(b)(4) of the Act [6] in particular, in that it is designed to provide for the equitable allocation of reasonable dues, fees and other charges among Exchange participants, issuers and other persons using its facilities.

*B. Self-Regulatory Organization's Statement on Burden on Competition*

In proposing and adopting Regulation NMS, the Commission rescinded the prior prohibition on SROs from disseminating their trade reports independently,[7] subjecting that distribution to the ''fair and reasonable'' and ''not unreasonably discriminatory'' standards that have historically governed the distribution of consolidated data.[8] The Commission stated, ''Given that * * * SROs will continue to transmit trades to the Networks pursuant to the Plans * * *,

[4] *See* Securities Exchange Act Release Nos. 28407 (September 6, 1990), 55 FR 37276 (September 10, 1990), and 49185 (February 4, 2004), 69 FR 6704 (February 11, 2004).

[5] 15 U.S.C. 78f(b).

[6] 15 U.S.C. 78f(b)(4).

[7] *See* Rule 601 of Regulation NMS.

[8] *See* Rule 603(a) of Regulation NMS.

the Commission believe [sic] that SROs and their members also should be free to distribute their trades independently.'' [9]

The Commission rescinded the prohibition in recognition of the fact that competition in the realm of SRO trade-report distribution would produce market forces and innovation that would benefit the investing public. By means of the pilot program, the Exchange would allow internet service providers and traditional vendors to test the viability of an alternative market data fee structure that does not exist today and to do so without the burden of the reporting, contracting and other administrative obligations associated with most other market data services. If they believe that the proposed fees would enable them to make market data available in the most cost-effective manner for them and their subscribers and customers, they will embrace the pilot program's proposed fees. If not, they will continue to make consolidated last sale prices available pursuant to the Network A fees currently in effect under the CTA Plan.

Given that the pilot program proposes to provide an alternative to existing fees and does not alter or rescind any existing fees, the Exchange does not believe that the proposed rule change will result in any burden on competition that is not necessary or appropriate in furtherance of the purposes of the Act.

*C. Self-Regulatory Organization's Statement on Comments on the Proposed Rule Change Received From Members, Participants, or Others*

The Exchange has discussed the proposed rules change with those entities that the Exchange believes would be the most likely to take advantage of the proposed NYSE Real-Time Trade Prices service by becoming NYSE–Only Vendors. While those entities have not submitted formal, written comments on the proposal, the Exchange has incorporated some of their ideas into the proposal and the proposed rule change reflects their input. The Exchange has not received any unsolicited written comments from members or other interested parties.

**III. Date of Effectiveness of the Proposed Rule Change and Timing for Commission Action**

Within 35 days of the date of publication of this notice in the **Federal Register** or within such longer period (i) as the Commission may designate up to 90 days of such date if it finds such longer period to be appropriate and publishes its reasons for so finding, or (ii) as to which the NYSE consents, the Commission will:

A. By order approve such proposed rule change; or

B. institute proceedings to determine whether the proposed rule change should be disapproved.

**IV. Solicitation of Comments**

Interested persons are invited to submit written data, views, and arguments concerning the foregoing, including whether the proposed rule change is consistent with the Act. Comments may be submitted by any of the following methods:

*Electronic Comments*

- Use the Commission's Internet comment form (*http://www.sec.gov/rules/sro.shtml*); or
- Send an e-mail to *rule-comments@sec.gov*. Please include File Number SR–NYSE–2007–04 on the subject line.

*Paper Comments*

- Send paper comments in triplicate to Nancy M. Morris, Secretary, Securities and Exchange Commission, Station Place, 100 F Street, NE., Washington, DC 20549–1090.

All submissions should refer to File Number SR–NYSE–2007–04. This file number should be included on the subject line if e-mail is used. To help the Commission process and review your comments more efficiently, please use only one method. The Commission will post all comments on the Commission's Internet Web site (*http://www.sec.gov/rules/sro.shtml*). Copies of the submission, all subsequent amendments, all written statements with respect to the proposed rule change that are filed with the Commission, and all written communications relating to the proposed rule change between the Commission and any person, other than those that may be withheld from the public in accordance with the provisions of 5 U.S.C. 552, will be available for inspection and copying in the Commission's Public Reference Room. Copies of such filing also will be available for inspection and copying at the principal office of the Exchange. All comments received will be posted without change; the Commission does not edit personal identifying information from submissions. You should submit only information that you wish to make publicly available. All submissions should refer to File Number SR–NYSE–2007–04 and should be submitted on or before March 26, 2007.

For the Commission, by the Division of Market Regulation, pursuant to delegated authority.[10]

**Florence E. Harmon,**

*Deputy Secretary.*

[FR Doc. E7–3750 Filed 3–2–07; 8:45 am]

BILLING CODE 8010–01–P

[9] *See* Footnote 638 to Regulation NMS (Securities Exchange Act Release No. 51808; File No. S7–10–04 (June 9, 2005), 70 FR 37495 (June 29, 2005)).

[10] 17 CFR 200.30–3(a)(12).

## SECURITIES AND EXCHANGE COMMISSION

**[Release No. 34–55339; File No. SR–NYSEArca–2007–14]**

## Self-Regulatory Organizations; NYSE Arca, Inc.; Notice of Filing of Proposed Rule Change to Amend Existing Rules for Investment Company Units

February 23, 2007.

Pursuant to Section 19(b)(1) of the Securities Exchange Act of 1934 (''Act''),[1] and Rule 19b–4 thereunder,[2] notice is hereby given that on February 8, 2007, NYSE Arca, Inc. (''NYSE Arca'' or ''Exchange''), through its wholly owned subsidiary NYSE Arca Equities, Inc. (''NYSE Arca Equities''), filed with the Securities and Exchange Commission (''Commission'') the proposed rule change as described in Items I, II and III below, which Items have been substantially prepared by the Exchange. The Commission is publishing this notice and order to solicit comment on the proposed rule change from interested persons.

**I. Self-Regulatory Organization's Statement of the Terms of Substance of the Proposed Rule Change**

NYSE Arca, proposes to modify its listing standards applicable to Investment Company Units (''Investment Company Units'' or ''ICUs'') by amending Commentary .01(b)(1) to NYSE Arca Equities Rule 5.2(j)(3) to eliminate the requirement that the calculation methodology for the index underlying a series of ICUs must be one of those enumerated in the commentary. The text of the proposed rule change is available at NYSE Arca, the Commission's Public Reference Room, and *http://www.nysearca.com/regulation/filings.asp.*

[1] 15 U.S.C. 78s(b)(1).

[2] 17 CFR 240.19b–4.

## II. Self-Regulatory Organization's Statement of the Purpose of, and Statutory Basis for, the Proposed Rule Change

In its filing with the Commission, the Exchange included statements concerning the purpose of and basis for the proposed rule change and discussed any comments it received on the proposed rule change. The text of these statements may be examined at the places specified in Item IV below. The Exchange has prepared summaries, set forth in Sections A, B, and C below, of the most significant aspects of such statements.

### *A. Self-Regulatory Organization's Statement of the Purpose of, and Statutory Basis for, the Proposed Rule Change*

1. Purpose

The Exchange proposes to eliminate the requirement that the prescribed calculation methodology for the index underlying a series of ICUs must be one of those enumerated in Commentary .01(b)(1) of Rule 5.2(j)(3). The proposed rule change is based on proposed rule changes of both the American Stock Exchange and New York Stock Exchange.[3]

The Exchange has adopted listing standards applicable to ICUs which are consistent with the listing criteria currently used by other national securities exchanges, and trading standards pursuant to which the Exchange may either list and trade ICUs or trade such ICUs on the Exchange on an unlisted trading privileges (''UTP'') basis.[4] An Investment Company Unit is defined in NYSE Arca Equities Rule 5.1(b)(15) as a security representing an interest in a registered investment company that could be organized as a unit investment trust, an open-end management investment company or a similar entity. A registered investment company is registered under the Investment Company Act of 1940.[5]

The ''generic'' listing criteria of Commentary .01 to Rule 5.2(j)(3) permits listing or trading pursuant to UTP of ICUs that satisfy such criteria in reliance upon Rule 19b–4(e) under the Act,[6] without a separate filing. Commentary .01(b)(1) to Rule 5.2(j)(3) currently requires that where a series of ICUs approved for trading (including pursuant to UTP) on the Exchange in reliance upon Rule 19b–4(e) of the Act, the index underlying the series of ICUs must be calculated based on either the market capitalization, modified market capitalization, price, equal-dollar or modified equal-dollar weighting methodology or a methodology weighting components of the index based on any, some or all of the following: Sales, cash flow, book value, and dividends.[7]

The Exchange proposes to delete Commentary .01(b)(1) to Rule 5.2(j)(3) and thereby eliminate the calculation methodology limitation.

In recent years, academics and market professionals have explored and defined a growing list of innovations in index construction. Most recently, the Commission approved amendments to the generic listing criteria to accommodate new index weighting methodologies based on ranking companies by financial data such as sales, cash flow, book value and dividends.[8] The Exchange believes there are multiple ways for indexes to be constructed to serve useful market purposes. Additional methodologies are under active development by academics and market professionals and permitting only certain specified index weighting methods does not take into account the rapid innovation in this area. The Exchange believes that, with respect to ICUs listed pursuant to Rule 19b–4(e) under the Act, applying the numerical weighting and liquidity criteria and index dissemination requirements set forth in the remainder of Commentary .01 to Rule 5.2(j)(3), without imposing constraints on the index methodology, will provide greater flexibility to indexers and ICU issuers to develop indexes that meet the investment objectives of investors. In addition, the proposed rule change would allow ICUs based on a non-traditional weighting methodology to be brought to market more quickly, thereby reducing burdens on ICU issuers and other market participants and promoting competition.

The Exchange notes that the numerical criteria in Commentary .01 already define the concentration limits, diversity requirements and liquidity requirements of the companies in the underlying index. For example, the generic listing standards for domestic indexes require, among other things, that an index include at least 13 stocks, that the most heavily weighted component stock of an index cannot exceed 30% of the index or portfolio weight, and the five most heavily weighted component stocks of an index cannot exceed 65% of the index or portfolio weight. ICUs and their underlying indexes would continue to be subject to all other requirements of Rule 5.2(j)(3) and Commentary .01. Under these circumstances, the Exchange believes that removal of the index weighting requirements of Commentary .01(b)(1) will not compromise investor protection.

2. Statutory Basis

The proposed rule change is consistent with Section 6(b)[9] of the Act, in general, and furthers the objectives of Section 6(b)(5)[10] in particular in that it is designed to prevent fraudulent and manipulative acts and practices, to promote just and equitable principles of trade, to foster cooperation and coordination with persons engaged in facilitating transactions in securities, and to remove impediments to and perfect the mechanisms of a free and open market and a national market system.

### *B. Self-Regulatory Organization's Statement on Burden on Competition*

The Exchange does not believe that the proposed rule change will impose any burden on competition that is not necessary or appropriate in furtherance of the purposes of the Act.

### *C. Self-Regulatory Organization's Statement on Comments on the Proposed Rule Change Received From Members, Participants or Others*

Written comments on the proposed rule change were neither solicited nor received.

## III. Date of Effectiveness of the Proposed Rule Change and Timing for Commission Action

Within 35 days of the date of publication of this notice in the **Federal Register** or within such longer period (i) as the Commission may designate up to

[3] *See* Securities Exchange Act Release No. 55240 (February 5, 2007), 72 FR 06624 (Februrary 12, 2007). *See also* SR–NYSE–2007–12 (submitted to the Commission).

[4] In October 1999, the Commission approved NYSE Arca Equities Rule 5.2(j)(3), which sets forth the rules related to listing and trading criteria for Investment Company Units. *See* Securities Exchange Act Release No. 41983 (October 6, 1999), 64 FR 56008 (October 15, 1999) (SR–PCX–1998–29). In July 2001, the Commission also approved the Exchange's generic listing standards for listing and trading, or the trading pursuant to UTP, of Investment Company Units under NYSE Arca Equities Rule 5.2(j)(3). *See* Securities Exchange Act Release No. 44551 (July 12, 2001), 66 FR 37716 (July 19, 2001) (SR–PCX–2001–14).

[5] 15 U.S.C. 80a.

[6] 17 CFR 240.19b–4(e).

[7] *See* Securities Exchange Act Release No. 54490 (September 22, 2006), 71 FR 58034 (October 2, 2006) (SR–NYSEArca–2006–61) (approving underlying index weightings for: sales, cash flow, book value and dividends).

[8] *See* Securities Exchange Act Release No. 54649 (October 24, 2006); 71 FR 63816 (October 31, 2006) (SR–NYSE–2006–88).

[9] 15 U.S.C. 78f(b).

[10] 15 U.S.C. 78f(b)(5).

90 days of such date if it finds such longer period to be appropriate and publishes its reasons for so finding or (ii) as to which the self-regulatory organization consents, the Commission will:

(A) By order approve the proposed modifications, or

(B) Institute proceedings to determine whether the proposed rule change should be disapproved.

The Exchange has requested accelerated approval of this proposed rule change. The Commission has determined that a 15-day comment period is appropriate in this case.

**IV. Solicitation of Comments**

Interested persons are invited to submit written data, views, and arguments concerning the foregoing, including whether the proposed rule change is consistent with the Act. Comments may be submitted by any of the following methods:

*Electronic Comments*

- Use the Commission's Internet comment form (*http://www.sec.gov/rules/sro.shtml*) or
- Send an e-mail to *rules-comments@sec.gov.* Please include File No. SR–NYSEArca–2007–14 on the subject line.

*Paper Comments*

- Send paper comments in triplicate to Nancy M. Morris, Secretary, Securities and Exchange Commission, 100 F Street NE, Washington, DC 20549–1090.

All submissions should refer to File No. SR–NYSEArca–2007–14. This file number should be included on the subject line if e-mail is used. To help the Commission process and review your comments more efficiently, please use only one method. The Commission will post all comments on the Commission's Internet Web site (*http://www.sec.gov/rules/sro.shtml*). Copies of the submission, all subsequent amendments, all written statements with respect to the proposed rule change that are filed with the Commission, and all written communications relating to the proposed rule change between the Commission and any person, other than those that may be withheld from the public in accordance with the provisions of 5 U.S.C. 552, will be available for inspection and copying in the Commission's Public Reference Room. Copies of such filing also will be available for inspection and copying at the principal offices of the Exchange. All comments received will be posted without change; the Commission does not edit personal identifying information from submissions. You should submit only information that you wish to make available publicly. All submissions should refer to File No. SR–NYSEArca–2007–14 and should be submitted on or before March 20, 2007.

For the Commission, by the Division of Market Regulation, pursuant to delegated authority.[11]

**Florence E. Harmon,**

*Deputy Secretary.*

[FR Doc. E7–3739 Filed 3–2–07; 8:45 am]

BILLING CODE 8010–01–P

---

## SECURITIES AND EXCHANGE COMMISSION

**[Release No. 34–55340; File No. SR–NYSEArca–2007–18]**

## Self-Regulatory Organizations; NYSE Arca, Inc.; Notice of Filing and Immediate Effectiveness of Proposed Rule Change Clarifying the Operative Date of Rules Relating to Regulation NMS

February 23, 2007.

Pursuant to Section 19(b)(1) of the Securities Exchange Act of 1934 (''Act'')[1] and Rule 19b–4 thereunder,[2] notice is hereby given that on February 22, 2007, the NYSE Arca, Inc. (''NYSE Arca'' or ''Exchange'') filed with the Securities and Exchange Commission (''Commission'') the proposed rule change as described in Items I and II below, which Items have been substantially prepared by NYSE Arca. The Exchange has filed the proposal as a ''non-controversial'' rule change pursuant to Section 19(b)(3)(A) of the Act[3] and Rule 19b–4(f)(6) thereunder,[4] which renders it effective upon filing with the Commission. The Commission is publishing this notice to solicit comments on the proposed rule change from interested persons.

**I. Self-Regulatory Organization's Statement of the Terms of Substance of the Proposed Rule Change**

NYSE Arca proposes to clarify the operative date of the rule changes made in connection with Regulation NMS,[5] from February 4, 2007 to March 5, 2007.[6] There is no new rule text.

**II. Self-Regulatory Organization's Statement of the Purpose of, and Statutory Basis for, the Proposed Rule Change**

In its filing with the Commission, NYSE Arca included statements concerning the purpose of and basis for the proposed rule change and discussed any comments it received on the proposed rule change. The text of these statements may be examined at the places specified in Item IV below. NYSE Arca has prepared summaries, set forth in Sections A, B, and C below, of the most significant aspects of such statements.

*A. Self-Regulatory Organization's Statement of the Purpose of, and Statutory Basis for, the Proposed Rule Change*

1. Purpose

The proposed rule change clarifies the operative date of the rule changes made in connection with Regulation NMS[7] from February 4, 2007 to March 5, 2007. This clarification stems in part from the Commission's extension of the Trading Phase Date of Regulation NMS to March 5, 2007.[8]

2. Statutory Basis

NYSE Arca believes the proposed rule change is consistent with Section 6(b) of the Act,[9] in general, and furthers the objectives of Section 6(b)(5) of the Act,[10] in particular, in that it is designed to prevent fraudulent and manipulative acts and practices, to promote just and equitable principles of trade, to foster cooperation and coordination with persons engaged in facilitating transactions in securities, and to remove impediments to and perfect the mechanism of a free and open market and a national market system.

*B. Self-Regulatory Organization's Statement on Burden on Competition*

The Exchange does not believe that the proposed rule change will impose any burden on competition that is not necessary or appropriate in furtherance of the purposes of the Act.

*C. Self-Regulatory Organization's Statement on Comments on the Proposed Rule Change Received From Members, Participants or Others*

No written comments were either solicited or received.

---

[11] 17 CFR 200.30–3(a)(12).

[1] 15 U.S.C. 78s(b)(1).

[2] 17 CFR 240.19b–4.

[3] 15 U.S.C. 78s(b)(3)(A).

[4] 17 CFR 240.19b–4(f)(6).

[5] *See* Securities Exchange Act Release No. 54549 (September 29, 2006), 71 FR 59179 (October 6, 2006) (SR–NYSEArca–2006–59).

[6] *See* Securities Exchange Act Release No. 55160 (January 24, 2007), 72 FR 4202 (January 30, 2007).

[7] *See supra* note 5.

[8] *See supra* note 6.

[9] 15 U.S.C. 78f(b).

[10] 15 U.S.C. 78f(b)(5).

### III. Date of Effectiveness of the Proposed Rule Change and Timing for Commission Action

Because the forgoing rule change does not: (1) Significantly affect the protection of investors or the public interest; (2) impose any significant burden on competition; and (3) become operative for 30 days after the date of this filing, or such shorter time as the Commission may designate, it has become effective pursuant to Section 19(b)(3)(A) of the Act [11] and Rule 19b–4(f)(6) thereunder.[12]

A proposed rule change filed under 19b–4(f)(6) normally may not become operative prior to 30 days after the date of filing.[13] However, Rule 19b–4(f)(6)(iii) [14] permits the Commission to designate a shorter time if such action is consistent with the protection of investors and the public interest. The Exchange has requested that the Commission waive the 30-day operative delay. The Commission believes that waiving the 30-day operative delay is consistent with the protection of investors and the public interest because such waiver would permit the Exchange rules to immediately reflect the new Trading Phase Date, March 5, 2007. For this reason, the Commission designates the proposed rule change to be operative upon filing with the Commission.[15]

At any time within 60 days of the filing of such proposed rule change the Commission may summarily abrogate such rule change if it appears to the Commission that such action is necessary or appropriate in the public interest, for the protection of investors or otherwise in furtherance of the purposes of the Act.

### IV. Solicitation of Comments

Interested persons are invited to submit written data, views, and arguments concerning the foregoing, including whether the proposed rule change is consistent with the Act. Comments may be submitted by any of the following methods:

*Electronic Comments*

- Use the Commission's Internet comment form (*http://www.sec.gov/rules/sro.shtml*); or
- Send an e-mail to *rule-comments@sec.gov.* Please include File Number SR–NYSEArca–2007–18 on the subject line.

*Paper Comments*

- Send paper comments in triplicate to Nancy M. Morris, Secretary, Securities and Exchange Commission, 100 F Street, NE, Washington, DC 20549–1090.

All submissions should refer to File Number SR–NYSEArca–2007–18. This file number should be included on the subject line if e-mail is used. To help the Commission process and review your comments more efficiently, please use only one method. The Commission will post all comments on the Commission's Internet Web site (*http://www.sec.gov/rules/sro.shtml*). Copies of the submission, all subsequent amendments, all written statements with respect to the proposed rule change that are filed with the Commission, and all written communications relating to the proposed rule change between the Commission and any person, other than those that may be withheld from the public in accordance with the provisions of 5 U.S.C. 552, will be available for inspection and copying in the Commission's Public Reference Room. Copies of the filing also will be available for inspection and copying at the principal office of NYSE Arca. All comments received will be posted without change; the Commission does not edit personal identifying information from submissions. You should submit only information that you wish to make available publicly. All submissions should refer to File Number SR–NYSEArca–2007–18 and should be submitted on or before March 26, 2007.

For the Commission, by the Division of Market Regulation, pursuant to delegated authority.[16]

**Florence E. Harmon,**

*Deputy Secretary.*

[FR Doc. E7–3740 Filed 3–2–07; 8:45 am]

BILLING CODE 8010–01–P

[11] 15 U.S.C. 78s(b)(3)(A).

[12] 17 CFR 240.19b–4(f)(6).

[13] 17 CFR 240.19b–4(f)(6)(iii). In addition, Rule 19b–4(f)(6)(iii) requires that a self-regulatory organization submit to the Commission written notice of its intent to file the proposed rule change, along with a brief description and text of the proposed rule change, at least five business days prior to the date of filing of the proposed rule change, or such shorter time as designated by the Commission. NYSE Arca has satisfied the five-day pre-filing notice requirement.

[14] *Id.*

[15] For the purposes only of waiving the 30-day operative delay, the Commission has considered the proposed rule's impact on efficiency, competition, and capital formation. *See* 15 U.S.C. 78c(f).

[16] 17 CFR 200.30–3(a)(12).

## SECURITIES AND EXCHANGE COMMISSION

**[Release No. 34–55347; File No. SR–NYSEArca–2007–19]**

## Self-Regulatory Organizations; NYSE Arca, Inc.; Notice of Filing and Immediate Effectiveness of Proposed Rule Change To Extend the Exchange's Standard Position and Exercise Limit Pilot Program

February 26, 2007.

Pursuant to Section 19(b)(1) of the Securities Exchange Act of 1934 (''Act'') [1] and Rule 19b–4 thereunder,[2] notice is hereby given that on February 23, 2007, the NYSE Arca, Inc. (''NYSE Arca'' or ''Exchange'') filed with the Securities and Exchange Commission (''Commission'') the proposed rule change as described in Items I and II below, which Items have been substantially prepared by the Exchange. The Exchange has filed the proposal as a ''non-controversial'' rule change pursuant to Section 19(b)(3)(A) of the Act [3] and Rule 19b–4(f)(6) thereunder,[4] which renders it effective upon filing with the Commission. The Commission is publishing this notice to solicit comments on the proposed rule change from interested persons.

### I. Self-Regulatory Organization's Statement of the Terms of Substance of the Proposed Rule Change

NYSE Arca proposes to amend its rules to extend the time period in NYSE Arca Rule 6.8(a), which covers the position limit and exercise limits pilot program for equity option contracts and options on the Nasdaq–100 Tracking Stock (''QQQQ'') (''Pilot Program''). The text of the proposed rule change is available at NYSE Arca, the Commission's Public Reference Room, and *http://www.nysearca.com.*

[1] 15 U.S.C. 78s(b)(1).

[2] 17 CFR 240.19b–4.

[3] 15 U.S.C. 78s(b)(3)(A).

[4] 17 CFR 240.19b–4(f)(6).

## II. Self-Regulatory Organization's Statement of the Purpose of, and Statutory Basis for, the Proposed Rule Change

In its filing with the Commission, NYSE Arca included statements concerning the purpose of and basis for the proposed rule change and discussed any comments it received on the proposed rule change. The text of these statements may be examined at the places specified in Item IV below. NYSE Arca has prepared summaries, set forth in Sections A, B, and C below, of the most significant aspects of such statements.

*A. Self-Regulatory Organization's Statement of the Purpose of, and Statutory Basis for, the Proposed Rule Change*

1. Purpose

The purpose of this proposal is to extend the period for the Exchange's Pilot Program relating to standard position and exercise limits for equity option contracts and for options on QQQQs until September 1, 2007.[5] Specifically, the Pilot Program increased the applicable position and exercise limits for equity options and options on the QQQQ in accordance with the following levels:

| Current equity option contract limit[6] | Pilot Program Equity Option Contract Limit |
|---|---|
| 13,500 | 25,000 |
| 22,500 | 50,000 |
| 31,500 | 75,000 |
| 60,000 | 200,000 |
| 75,000 | 250,000 |
| **Current QQQQ option contract limit** | **Pilot program QQQQ option contract limit** |
| 300,000 | 900,000 |

The Exchange believes that extending the Pilot Program until September 1, 2007 is warranted due to the positive feedback from OTP Holders and for the reasons cited in the original rule filing that proposed the Pilot Program.[7] The Exchange has not encountered any problems or difficulties relating to the Pilot Program since its inception. For these reasons, the Exchange requests that the Commission extend the Pilot Program until September 1, 2007.

2. Statutory Basis

The Exchange believes the proposed rule change is consistent with the Act and the rules and regulations thereunder and, in particular, the requirements of Section 6(b) of the Act.[8] Specifically, the Exchange believes the proposed rule change is consistent with Section 6(b)(5) of the Act[9] that requires that the rules of an exchange be designed to promote just and equitable principles of trade, to prevent fraudulent and manipulative acts, to remove impediments to and perfect the mechanism for a free and open market and a national market system, and, in general, to protect investors and the public interest.

*B. Self-Regulatory Organization's Statement on Burden on Competition*

The Exchange does not believe that the proposed rule change will impose any burden on competition that is not necessary or appropriate in furtherance of the purposes of the Act.

*C. Self-Regulatory Organization's Statement on Comments on the Proposed Rule Change Received From Members, Participants, or Others*

Written comments on the proposed rule change were neither solicited nor received.

## III. Date of Effectiveness of the Proposed Rule Change and Timing for Commission Action

Because the foregoing rule change does not: (1) Significantly affect the protection of investors or the public interest; (2) impose any significant burden on competition; and (3) become operative for 30 days from the date of this filing, or such shorter time as the Commission may designate, it has become effective pursuant to Section 19(b)(3)(A) of the Act[10] and Rule 19b–4(f)(6) thereunder.[11]

A proposed rule change filed under Rule 19b–4(f)(6) normally may not become operative prior to 30 days after the date of filing.[12] However, Rule 19b–4(f)(6)(iii)[13] permits the Commission to designate a shorter time if such action is consistent with the protection of investors and the public interest. The Exchange has requested that the Commission waive the 30-day operative delay. The Commission believes that waiving the 30-day operative delay is consistent with the protection of investors and in the public interest because it will allow the Pilot Program to continue uninterrupted.[14]

At any time within 60 days of the filing of the proposed rule change, the Commission may summarily abrogate such rule change if it appears to the Commission that such action is necessary or appropriate in the public interest, for the protection of investors, or otherwise in furtherance of the Act.

## IV. Solicitation of Comments

Interested persons are invited to submit written data, views, and arguments concerning the foregoing, including whether the proposed rule change is consistent with the Act. Comments may be submitted by any of the following methods:

[5] The Pilot Program, which was effective upon filing on February 25, 2005 and subsequently extended, is due to expire on March 1, 2007. *See* Securities Exchange Act Release No. 51286 (March 1, 2005), 70 FR 11297 (March 8, 2005) (SR–PCX–2003–55) (''Pilot Program Notice''). *See also* Securities Exchange Act Release Nos. 54385 (August 30, 2006), 71 FR 53150 (September 8, 2006) (SR–NYSEArca–49); 53350 (February 22, 2006), 71 FR 10582 (March 1, 2006) (SR–PCX–2006–08); and 52263 (August 15, 2005), 70 FR 49003 (August 22, 2005) (SR–PCX–2005–95).

[6] Except when the Pilot Program is in effect.

[7] *See* Pilot Program Notice, *supra* note 5.

[8] 15 U.S.C. 78f(b).

[9] 15 U.S.C. 78f(b)(5).

[10] 15 U.S.C. 78s(b)(3)(A).

[11] 17 CFR 240.19b–4(f)(6).

[12] 17 CFR 240.19b–4(f)(6)(iii). In addition, Rule 19b–4(f)(6)(iii) requires that a self-regulatory organization submit to the Commission written notice of its intent to file the proposed rule change, along with a brief description and text of the proposed rule change, at least five business days prior to the date of filing of the proposed rule change, or such shorter time as designated by the Commission. NYSEArca has satisfied the five-day pre-filing requirement.

[13] *Id.*

[14] For purposes only of waiving the operative delay, the Commission has considered the proposed rule's impact on efficiency, competition, and capital formation. *See* 15 U.S.C. 78c(f).

*Electronic Comments*

- Use the Commission's Internet comment form (*http://www.sec.gov/rules/sro.shtml*); or
- Send an e-mail to *rule-comments@sec.gov.* Please include File No. SR–NYSEArca–2007–19 on the subject line.

*Paper Comments*

- Send paper comments in triplicate to Nancy M. Morris, Secretary, Securities and Exchange Commission, Station Place, 100 F Street, NE., Washington, DC 20549–1090.

All submissions should refer to File No. SR–NYSEArca–2007–19. This file number should be included on the subject line if e-mail is used. To help the Commission process and review your comments more efficiently, please use only one method. The Commission will post all comments on the Commission's Internet Web site (*http://www.sec.gov/rules/sro.shtml*). Copies of the submission, all subsequent amendments, all written statements with respect to the proposed rule change that are filed with the Commission, and all written communications relating to the proposed rule change between the Commission and any person, other than those that may be withheld from the public in accordance with the provisions of 5 U.S.C. 552, will be available for inspection and copying in the Commission's Public Reference Room. Copies of such filing will also be available for inspection and copying at the principal office of NYSE Arca. All comments received will be posted without change; the Commission does not edit personal identifying information from submissions. You should submit only information that you wish to make available publicly. All submissions should refer to File No. SR–NYSEArca-2007–19 and should be submitted on or before March 26, 2007.

For the Commission, by the Division of Market Regulation, pursuant to delegated authority.[15]

**Florence E. Harmon,**

*Deputy Secretary.*

[FR Doc. E7–3745 Filed 3–2–07; 8:45 am]

**BILLING CODE 8010–01–P**

[15] 17 CFR 200.30–3(a)(12).

## SECURITIES AND EXCHANGE COMMISSION

**[Release No. 34–55349; File No. SR–OCC–2006–08]**

## Self-Regulatory Organizations; The Options Clearing Corporation; Order Approving Proposed Rule Change To Revise Stock Futures Adjustment Methodology

February 26, 2007.

### I. Introduction

On May 19, 2006, The Options Clearing Corporation (''OCC'') filed with the Securities and Exchange Commission (''Commission'') proposed rule change SR–OCC–2006–08 pursuant to Section 19(b)(1) of the Securities Exchange Act of 1934 (''Act'').[1] Notice of the proposal was published in the **Federal Register** on December 14, 2006.[2] The Commission received no comment letters. For the reasons discussed below, the Commission is approving the proposed rule change.

### II. Description

OCC is seeking to amend Article XII (Futures and Futures Options), Section 3 (Adjustments to Futures and Futures Options) of OCC's By-Laws to conform to the changes adopted in rule change SR–OCC–2006–01, which amended Article VI (Clearance of Exchange Transactions), Section 11A (Adjustments for Stock Option Contracts).[3]

On January 12, 2006, OCC filed with the Commission proposed rule change SR–OCC–2006–01. Pursuant to SR–OCC–2006–01, OCC proposed, among other things, to amend its adjustment rules in Article VI, Section 11A for stock option contracts with respect to stock dividends, stock distributions, and stock splits. Subject to the Commission approving proposed rule change SR–OCC–2006–01, OCC proposed to amend Article XII, Section 3 to ensure stock futures contracts can be adjusted in a manner consistent with adjustments made to stock option contracts on the same underlying security.

As described in rule change SR–OCC–2006–01, OCC amended certain of its adjustment rules with respect to stock option contracts to eliminate the need to round strike prices and/or units of trading in the event of certain stock dividends, stock distributions, and stock splits.[4] The adjustment rules for stock futures as currently provided in Article XII, Section 3 parallel the adjustment rules for stock options provided in Article VI, Section 11A. Uniformity of the two provisions would ensure that stock futures contracts can be adjusted in a manner consistent with adjustments made to stock option contracts on the same underlying security. The changes to Article XII, Section 3 that are the subject of this proposed rule change are made solely to track the changes made to Article VI, Section 11A and are intended to ensure that adjustments to stock options and to stock futures made for stock dividends, stock distributions, and stock splits will remain consistent with respect to an underlying security.

As noted above, the central purpose of the rule change in SR–OCC–2006–01 was to eliminate inequities which resulted from certain rounding practices previously required by OCC's By-Laws because stock option strike prices are quoted in and are therefore rounded to the nearest one-eighth. Stock futures do not have the same inequities because they are quoted in decimals. Nevertheless, in order to ensure adjustments for stock options and for stock futures remain consistent, OCC proposes to revise the adjustment rules with respect to stock futures to match the revised adjustment rules with respect to stock options for stock dividends, stock distributions, and stock splits.

OCC will implement the proposed rule change described herein concurrently with the implementation of the changes approved in SR–OCC–2006–01.

### III. Discussion

Section 19(b) of the Act directs the Commission to approve a proposed rule change of a self-regulatory organization if it finds that such proposed rule change is consistent with the requirements of the Act and the rules and regulations thereunder applicable to such organization. Section 17A(b)(3)(F) of the Act requires that the rules of a clearing agency be designed, in general, to protect investors and the public interest.[5] The Commission believes that OCC's rule change is consistent with this Section because it is intended solely to keep the adjustment rules for stock futures with respect to stock

[1] 15 U.S.C. 78s(b)(1).

[2] Securities Exchange Act Release No. 54898 (December 8, 2006), 71 FR 75287.

[3] Securities Exchange Act Release Nos. 55258 (February 8, 2007), 72 FR 7701 [File No. SR–OCC–2006–01] (order approving proposed rule change to revise stock options adjustment methodology) and 53400 (March 2, 2006), 71 FR 12226 [File No. SR–OCC–2006–01] (notice of filing of proposed rule change to revise stock options adjustment methodology).

[4] The notice and order for SR–OCC–2006–01 describes OCC's proposed changes to and the rationale for the rule change to its adjustment rules for stock options.

[5] 15 U.S.C. 78q–1(b)(3)(F).

dividends, stock distributions, and stock splits consistent with the adjustment rules for stock options with respect to stock dividends, stock distributions, and stock splits and thus should protect investors and the public interest.

## IV. Conclusion

On the basis of the foregoing, the Commission finds that the proposed rule change is consistent with the requirements of the Act and in particular Section 17A of the Act and the rules and regulations thereunder. In approving the proposed rule change, the Commission considered the proposal's impact on efficiency, competition and capital formation.

*It is therefore ordered*, pursuant to section 19(b)(2) of the Act, that the proposed rule change (File No. SR–OCC–2006–08) be and hereby is approved.

For the Commission by the Division of Market Regulation, pursuant to delegated authority.[6]

**Florence E. Harmon,**

*Deputy Secretary.*

[FR Doc. E7–3747 Filed 3–2–07; 8:45 am]

**BILLING CODE 8010–01–P**

[6] 17 CFR 200.30–3(a)(12).

---

## SECURITIES AND EXCHANGE COMMISSION

**[Release No. 34–55362; File No. SR–OCC–2007–01]**

## Self-Regulatory Organizations; The Options Clearing Corporation; Notice of Filing of Proposed Rule Change Relating to Credit Default Options

February 27, 2007.

Pursuant to Section 19(b)(1) of the Securities Exchange Act of 1934 (''Act''),[1] notice is hereby given that on February 13, 2007, The Options Clearing Corporation (''OCC'') filed with the Securities and Exchange Commission (''Commission'') the proposed rule change described in Items I, II, and III below, which items have been prepared primarily by OCC. The Commission is publishing this notice to solicit comments on the proposed rule change from interested parties.

### I. Self-Regulatory Organization's Statement of the Terms of Substance of the Proposed Rule Change

The proposed rule change would permit OCC to clear and settle credit default options (''CDOs''), which are options related to the creditworthiness of an issuer or guarantor of one or more specified debt securities. Credit default options are proposed to be traded by the Chicago Board Options Exchange (''CBOE'').[2]

### II. Self-Regulatory Organization's Statement of the Purpose of, and Statutory Basis for, the Proposed Rule Change

In its filing with the Commission, OCC included statements concerning the purpose of and basis for the proposed rule change and discussed any comments it received on the proposed rule change. The text of these statements may be examined at the places specified in Item IV below. OCC has prepared summaries, set forth in sections (A), (B), and (C) below, of the most significant aspects of these statements.[3]

*(A) Self-Regulatory Organization's Statement of the Purpose of, and Statutory Basis for, the Proposed Rule Change*

The purpose of this rule change is to permit OCC to clear and settle CDOs, which are options related to the creditworthiness of an issuer or guarantor (''reference entity'') of one or more specified debt securities (''reference obligation(s)''). CDOs are binary options that pay a fixed amount to the holder of the option upon the occurrence of a ''credit event'' affecting the reference obligations.[4] Characteristics of CDOs are described below, followed by an explanation of the specific rule changes being proposed to clear them.

Description of Credit Default Options

CDOs are structured as binary options that are automatically exercised and the exercise settlement amount payable if a ''credit event'' occurs at any time prior to the last day of trading. A ''credit event'' is generally defined as any failure to pay on any of the reference obligations or any other occurrence that would constitute an ''event of default'' or ''restructuring'' under the terms of any of the reference obligations and that the listing exchange has determined would be a credit event for purposes of the CDO. Under CBOE's current proposal, the payout or ''settlement amount'' for a single exercised option would be $100,000.

OCC does not currently clear any binary options although OCC has filed a rule change[5] seeking to clear binary options on securities and securities indexes that have been proposed for trading by CBOE and the American Stock Exchange (''Amex'').[6] The binary options rule filings of OCC, Amex, and CBOE are still pending approval by the Commission, and OCC expects to amend its binary options rule filing in the near future in order to conform it to the changes made in this filing and to make any additional changes necessary to accommodate the Amex and CBOE products. Under the binary options rule filings, binary options are proposed to be traded on the price of single securities or on the price of indexes of securities where the option is exercised if the closing value of the underlying interest meets the specified criterion for automatic exercise, which could be defined as ''at or above'' a certain value, ''below'' a certain value, or in other ways. In other words, the underlying interest is a continuous measure that could have a wide range of positive values. CDOs, on the other hand, are options for which the payout is determined by the occurrence or non-occurrence of a discrete credit event affecting underlying securities. The rules proposed in the current rule filing for CDOs are intended to be sufficiently generic to be the basis for clearing CDOs as well as other binary options although certain provisions specific to other binary options proposals will be filed separately.

By-Law and Rule Amendments Applicable to CDOs

In order to accommodate trading in CDOs and to provide a framework of rules that can accommodate other binary option products as well, OCC proposes to add a new By-Law Article and a new Chapter to its Rules to incorporate several new defined terms and procedures for clearing and settling binary options generally and CDOs specifically.

1. Terminology—Article I, Section 1 and Article XIV, Section 1 of the By-Laws

''Binary Option'' is defined in Article XIV, Section 1 of the By-Laws, and that definition is cross-referenced in Article I of the By-Laws. The definition of ''expiration time'' in Article I is modified to be a default provision, permitting the expiration time to be defined differently for different classes of options. The definition of ''option contract'' in Article I of the By-Laws is amended to include a binary option and

[1] 15 U.S.C. 78s(b)(1).

[2] File No. SR–CBOE–2006–84, Securities Exchange Act Release No. 55251 (February 7, 2007), 72 FR 7091 (February 14, 2007) (notice of filing of proposed rule change).

[3] The Commission has modified the text of the summaries prepared by OCC.

[4] ''Binary'' options (also sometimes referred to as ''digital'' options) are ''all-or-nothing'' options that pay a fixed amount if automatically exercised and otherwise pay nothing.

[5] File No. SR–OCC–2004–21.

[6] File Nos. SR–Amex–2004–27 and SR–CBOE–2006–105.

to provide a more generic definition of ''cash-settled option.''

''Adjustment event'' is defined in Article XIV by reference to the rules of the listing exchange. Similarly, ''credit event'' is defined by reference to exchange rules. The terms ''credit event confirmation'' and ''credit event confirmation deadline'' are used, respectively, to refer to the notice that must be provided by the listing exchange or other reporting authority to OCC that a credit event has occurred (and that a CDO will therefore automatically be exercised) and to the deadline for receipt of such notice if it is to be treated as having been received on the business day on which it is submitted. Credit event confirmations received after the deadline on the expiration date but before the expiration time will be given effect but may result in delayed exercise settlement.

The definition of ''exercise price'' in Article I is replaced with respect to CDOs with a revised definition in Article XIV, Section 1 which recognizes that binary options will be settled by a fixed cash payment. The ''exercise price'' of a binary option is not, as defined in Article I, an amount that is paid in exchange for an underlying interest and is not used to determine the exercise settlement amount as in the case of other cash-settled options. In the case of a binary option other than a CDO, the exercise price is simply a defined value or range of values for the underlying interest. If the underlying interest falls within the defined range at expiration of the option, the option will be automatically exercised. Otherwise, it will expire unexercised. A CDO is said to have no exercise price.

OCC is also redefining the term ''exercise settlement amount'' in Article XIV for purposes of binary options. The exercise settlement amount of a binary option is the amount specified by the exchange on which the option is traded that will be paid in settlement of an automatically exercised option. CBOE has specified the exercise settlement amount for a single CDO as $100,000. OCC's proposed definition would permit an exchange to specify a different exercise settlement amount. The exercise settlement amount will be determined by the exchange at the time of listing when the exchange fixes the other variable terms for the options of a particular class or series.

OCC is replacing the definitions of ''variable terms,'' ''premium,'' and ''multiplier'' in Article I with revised definitions in Article XIV, Section 1 that are applicable to binary options generally. The term ''class'' is also redefined in Article XIV, Section 1. This new definition of ''class'' does not apply to binary options other than CDOs and will need to be supplemented for other binary options. To be within the same class, CDOs must have the same reporting authority, which OCC anticipates will ordinarily be the listing exchange. This is necessary because of the degree of discretion that the reporting authority will have in determining whether a credit event has occurred.

CDOs will be a subcategory of binary options where exercise is triggered by a discrete event such as a ''credit event'' affecting the ''reference obligations'' issued by a ''reference entity,'' which terms are defined to have the meanings given to them in the rules of the listing exchange. The term ''underlying interest'' is defined in the case of CDOs to be the reference obligation(s) with respect to which the credit event will or will not occur. In the case of other binary options, ''underlying interest'' is defined as the underlying security, index, or measure whose underlying interest value is compared to the option's exercise price to determine whether the option will be automatically exercised. ''Underlying interest value'' is defined to mean the value or level of the underlying interest used to determine whether a binary option will be automatically exercised. The term ''underlying interest value'' is not applicable to CDOs.

2. Terms of Cleared Contracts—Article VI, Section 10(e)

A new paragraph (e) is added to Article VI, Section 10 so that an exchange is required to designate the exercise settlement amount, expiration date, and exercise price for a series of binary options at the time the series is opened for trading. Section 10(e) also reminds the reader that binary options are subject to adjustment under Article XIV.

3. Rights and Obligations—Article XIV, Section 2

Article XIV, Section 2 defines the general rights and obligations of holders and writers of binary options. As noted above, the holder of a binary option that is automatically exercised has the right to receive the fixed exercise settlement amount from OCC, and the assigned writer has the obligation to pay that amount to OCC.

4. Adjustments of Credit Default Options—Article XIV, Section 3; Determination of Occurrence of Credit Event—Article XIV, Section 4

Article XIV, Section 3 provides for adjustment of CDOs in accordance with the rules of the listing exchange. CBOE's proposed rules provide for adjustment of CDOs in the case of certain corporate events affecting the reference obligations, and OCC proposes simply to defer to those rules and to the determinations of CBOE pursuant to those rules. Accordingly, OCC will have no responsibility for adjustment determinations with respect to CDOs. Adjustment rules for other binary options will be supplied as necessary for other products.

Similarly, Section 4 provides that the listing exchange for a class of CDOs will have responsibility for determining the occurrence of a credit event that will result in automatic exercise of the options of that class. The listing exchange has the obligation to provide a credit event confirmation to OCC in order to trigger the automatic exercise.

New Article XIV, Section 5 provides, in essence, that the underlying interest value of a series of binary options other than CDOs will be determined by the exchange or exchanges on which such series is traded. OCC reserves the right to override that determination in certain circumstances. If a series of binary options is traded on more than one exchange, OCC may use the underlying interest value received from the exchange deemed by OCC to be the principal exchange, or OCC may employ a procedure to derive a single value based on some or all of the values received.

5. Exercise and Settlement—Chapter XV of the Rules and Rule 801

Binary options would not be subject to the exercise-by-exception procedures applicable to most other options under OCC's Rules but would instead be automatically exercised at expiration if the specified criterion for exercise is met. The procedures for the automatic exercise of binary options, as well as their assignment and settlement (including during periods when a clearing member is suspended), are set forth in Rules 1501 through 1505 of new Chapter XV and in revised Rule 801(b).

6. Special Margin Requirements—Rule 601; Deposits in Lieu of Margin—Rule 1506

OCC will not initially margin CDOs through its usual ''STANS'' system. Because of CDOs' fixed payout feature, further systems development is needed to accommodate these options in STANS. Until such development is completed, OCC has initially determined to require that writers of such options post margin in a fixed amount that will be set at 100% of the fixed exercise settlement amount

applicable to each series of CDOs. OCC would have discretion to reduce the requirement to something less than 100% if research, analysis, and experience suggest that a lower percentage is sufficient. Initially, long positions in CDOs will be valued at zero and will provide no offset against margin requirements on the shorts. Again, based on research, analysis, and experience, OCC may determine to give some value to the longs. Ultimately, CDOs will be incorporated into the STANS system and valued and will be margined on a risk basis.

OCC does not propose to accept escrow deposits in lieu of clearing margin for binary options. Therefore, Rule 1506 states that Rule 610, which otherwise would permit such deposits, does not apply to binary options.

7. Acceleration of Expiration Date—Rule 1507

This provision permits OCC to accelerate the expiration date of a binary option when the value of the underlying interest has become fixed (*e.g.*, where a stock underlying a binary option has been converted by a merger into the right to receive a fixed amount of cash). If the value of the underlying interest does not meet the specified criterion for automatic exercise, it will expire unexercised. Otherwise, it will be automatically exercised.

The proposed changes to OCC's By-Laws and Rules are consistent with the purposes and requirements of Section 17A of the Act, as amended, because they are designed to promote the prompt and accurate clearance and settlement of transactions in, including exercises of, credit default options and other binary options, and to foster cooperation and coordination with persons engaged in the clearance and settlement of such transactions, to remove impediments to and perfect the mechanism of a national system for the prompt and accurate clearance and settlement of such transactions, and, in general, to protect investors and the public interest. They accomplish these purposes by applying substantially the same rules and procedures to binary options and specifically CDOs as OCC applies to similar transactions in other cash-settled options. Other than as described in this Item II, the proposed rule change is not inconsistent with the existing rules of OCC, including rules proposed to be amended.

*(B) Self-Regulatory Organization's Statement on Burden on Competition*

OCC does not believe that the proposed rule change would impose any burden on competition.

*(C) Self-Regulatory Organization's Statement on Comments on the Proposed Rule Change Received From Members, Participants, or Others*

Written comments were not and are not intended to be solicited with respect to the proposed rule change, and none have been received.

**III. Date of Effectiveness of the Proposed Rule Change and Timing for Commission Action**

Within thirty-five days of the date of publication of this notice in the **Federal Register** or within such longer period: (i) As the Commission may designate up to ninety days of such date if it finds such longer period to be appropriate and publishes its reasons for so finding or (ii) as to which the self-regulatory organization consents, the Commission will:

(A) By order approve such proposed rule change or

(B) Institute proceedings to determine whether the proposed rule change should be disapproved.

**IV. Solicitation of Comments**

Interested persons are invited to submit written data, views, and arguments concerning the foregoing, including whether the proposed rule change is consistent with the Act. Comments may be submitted by any of the following methods:

*Electronic Comments*

- Use the Commission's Internet comment form (*http://www.sec.gov/rules/sro.shtml*) or
- Send an e-mail to *rule-comments@sec.gov.* Please include File Number SR–OCC–2007–01 on the subject line.

*Paper Comments*

- Send paper comments in triplicate to Nancy M. Morris, Secretary, Securities and Exchange Commission, 100 F Street, NE., Washington, DC 20549–1090.

All submissions should refer to File Number SR–OCC–2007–01. This file number should be included on the subject line if e-mail is used. To help the Commission process and review your comments more efficiently, please use only one method. The Commission will post all comments on the Commission's Internet Web site (*http://www.sec.gov/rules/sro.shtml*). Copies of the submission, all subsequent amendments, all written statements with respect to the proposed rule change that are filed with the Commission, and all written communications relating to the proposed rule change between the Commission and any person, other than those that may be withheld from the public in accordance with the provisions of 5 U.S.C. 552, will be available for inspection and copying in the Commission's Public Reference Section, 100 F Street, NE., Washington, DC 20549. The text of the proposed rule change is available at OCC, the Commission's Public Reference Room, and *http://www.theocc.com/publications/rules/proposed_changes/sr_occ_07_01.pdf.* All comments received will be posted without change; the Commission does not edit personal identifying information from submissions. You should submit only information that you wish to make available publicly. All submissions should refer to File Number SR–OCC–2007–01 and should be submitted on or before March 26, 2007.

For the Commission by the Division of Market Regulation, pursuant to delegated authority.[7]

**Florence E. Harmon,**

*Deputy Secretary.*

[FR Doc. E7–3773 Filed 3–2–07; 8:45 am]

**BILLING CODE 8010–01–P**

---

## SECURITIES AND EXCHANGE COMMISSION

**[Release No. 34–55358; File No. SR–Phlx–2007–14]**

## Self-Regulatory Organizations; Philadelphia Stock Exchange, Inc.; Notice of Filing and Immediate Effectiveness of Proposed Rule Change Extending the Dividend, Merger, and Short Stock Interest Strategies Fee Cap Program

February 27, 2007.

Pursuant to Section 19(b)(1) of the Securities Exchange Act of 1934 (''Act'')[1] and Rule 19b–4 thereunder,[2] notice is hereby given that on February 21, 2007, the Philadelphia Stock Exchange, Inc. (''Phlx'' or ''Exchange'') filed with the Securities and Exchange Commission (''Commission'') the proposed rule change as described in Items I, II, and III below, which Items have been substantially prepared by the Exchange. Phlx has designated this proposal as one establishing or changing a due, fee, or other charge imposed by a self-regulatory organization pursuant to Section 19(b)(3)(A)(ii) of the Act[3] and Rule 19b–4(f)(2) thereunder,[4] which

[7] 17 CFR 200.30–3(a)(12).

[1] 15 U.S.C. 78s(b)(1).

[2] 17 CFR 240.19b–4.

[3] 15 U.S.C. 78s(b)(3)(A)(ii).

[4] 17 CFR 240.19b–4(f)(2).

renders the proposal effective upon filing with the Commission. The Commission is publishing this notice to solicit comments on the proposed rule change from interested persons.

## I. Self-Regulatory Organization's Statement of the Terms of Substance of the Proposed Rule Change

Phlx proposes to extend for a period of one year, until March 1, 2008, the pilot programs for: (1) The $1,000 and $25,000 fee caps on equity option transaction and comparison charges on dividend,[5] merger,[6] and short stock interest[7] strategies; and (2) the license fee of $0.05 per contract side imposed on dividend and short stock interest strategies, as described below. The current fee caps and $0.05 per contract side license fee are in effect as a pilot program that is scheduled to expire on March 1, 2007.[8] Other than extending the pilot program for an additional one-year period until March 1, 2008, no other changes to the Exchange's current dividend, merger and short stock interest strategy program, which includes the $0.05 per contract side license fee, are being proposed at this time.

The text of the proposed rule change is available on the Exchange's Web site (*http://www.phlx.com/exchange/phlx_rule_fil.html*), at the Exchange's principal office, and at the Commission's Public Reference Room.

## II. Self-Regulatory Organization's Statement of the Purpose of, and Statutory Basis for, the Proposed Rule Change

In its filing with the Commission, the Exchange included statements concerning the purpose of, and basis for, the proposed rule change and discussed any comments it received on the proposed rule change. The text of these statements may be examined at the places specified in Item IV below. The Exchange has prepared summaries, set forth in Sections A, B, and C below, of the most significant aspects of such statements.

### *A. Self-Regulatory Organization's Statement of the Purpose of, and Statutory Basis for, the Proposed Rule Change*

1. Purpose

Currently, the Exchange imposes a fee cap on equity option transaction and comparison charges on dividend, merger, and short stock interest strategies executed on the same trading day in the same options class. Specifically, Registered Options Trader (''ROT'') and specialist net equity option transaction and comparison charges are capped at $1,000 for dividend, merger, and short stock interest strategies executed on the same trading day in the same options class.[9] In addition, there is a $25,000 per member organization fee cap on equity option transaction and comparison charges incurred in one month for dividend, merger, and short stock interest strategies combined. The $1,000 and $25,000 fee caps are implemented after any applicable rebates are applied to ROT and specialist equity option transaction and comparison charges occurring as part of a dividend, merger, or short stock interest strategy.[10]

In addition, the Exchange assesses a license fee of $0.05 per contract side for dividend and short stock interest strategies in connection with certain products that carry license fees, if applicable.[11] The applicable license fee is assessed on every transaction and is not subject to the $1,000 or $25,000 fee caps described above, nor does it count towards reaching the $1,000 or $25,000 fee caps.

The Exchange represents that the purpose of extending the pilot program for the fee caps on equity option transaction and comparison charges on dividend, merger, and short stock interest strategies and the $0.05 per contract fee imposed on dividend and short stock interest strategies until March 1, 2008 is to continue to attract additional liquidity to the Exchange and to remain competitive with other options exchanges in connection with these types of options strategies. In addition, the Exchange also represents that the purpose of extending the pilot is to recoup the license fees owed in connection with the trading of products that carry license fees. Even with the assessment of the $0.05 license fee per contract side, the Exchange believes that the fee caps and rebates should continue to encourage specialists and ROTs to provide liquidity for these types of options strategies.

This proposal is scheduled to become effective for trades settling on or after March 1, 2007 and will remain in effect as a pilot program until March 1, 2008.

2. Statutory Basis

The Exchange believes that its proposal to amend its schedule of fees is consistent with Section 6(b) of the Act,[12] in general, and furthers the objectives of Section 6(b)(4) of the Act,[13] in particular, in that it is an equitable allocation of reasonable fees and other charges among Exchange members.

### *B. Self-Regulatory Organization's Statement on Burden on Competition*

The Exchange does not believe that the proposed rule change will impose any burden on competition that is not necessary or appropriate in furtherance of the purposes of the Act.

### *C. Self-Regulatory Organization's Statement on Comments on the Proposed Rule Change Received From Members, Participants or Others*

No written comments were either solicited or received.

## III. Date of Effectiveness of the Proposed Rule Change and Timing for Commission Action

The foregoing proposed rule change has become effective pursuant to Section 19(b)(3)(A)(ii) of the Act[14] and Rule 19b–4(f)(2) thereunder[15] because it establishes or changes a due, fee, or other charge imposed by the Exchange. At any time within 60 days of the filing of the proposed rule change, the Commission may summarily abrogate such rule change if it appears to the Commission that such action is necessary or appropriate in the public interest, for the protection of investors, or otherwise in furtherance of the purposes of the Act.

[5] For purposes of this proposal, the Exchange defines a ''dividend strategy'' as transactions done to achieve a dividend arbitrage involving the purchase, sale, and exercise of in-the-money options of the same class, executed prior to the date on which the underlying stock goes ex-dividend. *See, e.g.*, Securities Exchange Act Release No. 54174 (July 19, 2006), 71 FR 42156 (July 25, 2006) (SR–Phlx–2006–40).

[6] For purposes of this proposal, the Exchange defines a ''merger strategy'' as transactions done to achieve a merger arbitrage involving the purchase, sale and exercise of options of the same class and expiration date, executed prior to the date on which shareholders of record are required to elect their respective form of consideration, *i.e.*, cash or stock. *Id.*

[7] For purposes of this proposal, the Exchange defines a ''short stock interest strategy'' as transactions done to achieve a short stock interest arbitrage involving the purchase, sale and exercise of in-the-money options of the same class. *Id.*

[8] *See* Securities Exchange Act Release Nos. 54381 (August 29, 2006), 71 FR 52598 (September 6, 2006) (SR–Phlx–2006–50) and 54424 (September 11, 2006), 71 FR 54699 (September 18, 2006) (SR–Phlx–2006–55).

[9] *See* Securities Exchange Act Release No. 54424 (September 11, 2006), 71 FR 54699 (September 18, 2006) (SR–Phlx–2006–55).

[10] Currently, the Exchange rebates $0.08 per contract side for ROT executions and $0.07 per contract side for trades occurring as part of a dividend, merger, or short stock interest strategy.

[11] For a complete list of these product symbols, *see* the Exchange's $60,000 Firm-Related Equity Option and Index Option Cap Fee Schedule.

[12] 15 U.S.C. 78f(b).

[13] 15 U.S.C. 78f(b)(4).

[14] 15 U.S.C. 78s(b)(3)(A)(ii).

[15] 17 CFR 19b–4(f)(2).

## IV. Solicitation of Comments

Interested persons are invited to submit written data, views, and arguments concerning the foregoing, including whether the proposed rule change is consistent with the Act. Comments may be submitted by any of the following methods:

*Electronic Comments*

- Use the Commission's Internet comment form (*http://www.sec.gov/rules/sro.shtml*); or
- Send an e-mail to *rule-comments@sec.gov.* Please include File No. SR–Phlx–2007–14 on the subject line.

*Paper Comments*

- Send paper comments in triplicate to Nancy M. Morris, Secretary, Securities and Exchange Commission, Station Place, 100 F Street, NE., Washington, DC 20549–1090.

All submissions should refer to File Number SR–Phlx–2007–14. This file number should be included on the subject line if e-mail is used. To help the Commission process and review your comments more efficiently, please use only one method. The Commission will post all comments on the Commissions Internet Web site (*http://www.sec.gov/rules/sro.shtml*). Copies of the submission, all subsequent amendments, all written statements with respect to the proposed rule change that are filed with the Commission, and all written communications relating to the proposed rule change between the Commission and any person, other than those that may be withheld from the public in accordance with the provisions of 5 U.S.C. 552, will be available for inspection and copying in the Commission's Public Reference Room. Copies of the filing also will be available for inspection and copying at the principal office of Phlx. All comments received will be posted without change; the Commission does not edit personal identifying information from submissions. You should submit only information that you wish to make available publicly. All submissions should refer to File Number SR–Phlx–2007–14 and should be submitted on or before March 26, 2007.

For the Commission, by the Division of Market Regulation, pursuant to delegated authority.[16]

**Florence E. Harmon,**

*Deputy Secretary.*

[FR Doc. E7–3763 Filed 3–2–07; 8:45 am]

BILLING CODE 8010–01–P

[16] 17 CFR 200.30–3(a)(12).

## SMALL BUSINESS ADMINISTRATION

### Emergence Capital Partners SBIC, L.P. License No. 09/79–0454; Notice Seeking Exemption Under Section 312 of the Small Business Investment Act, Conflicts of Interest

Notice is hereby given that Emergence Capital Partners SBIC, L.P., 160 Bovet Road, Suite 300, San Mateo, CA 94402, a Federal Licensee under the Small Business Investment Act of 1958, as amended (''the Act''), in connection with the financing of a small concern, has sought an exemption under Section 312 of the Act and Section 107.730, Financings Which Constitute Conflicts of Interest of the Small Business Administration (''SBA'') Rules and Regulations (13 CFR 107.730). Emergence Capital Partners SBIC, L.P. proposes to provide equity/debt security financing to Intacct Corporation (''Intacct''), 125 S. Market Street, Suite 600, San Jose, CA 95113. The financing is contemplated to bridge the company's operations until either the round of equity is raised or a sale occurs.

The financing is brought within the purview of § 107.730(a)(1) of the Regulations because Emergence Capital Partners, L.P. and Emergence Capital Associates, L.P., all Associates of Emergence Capital Partners SBIC, L.P., own more than ten percent of Intacct, and therefore Intacct is considered an Associate of Emergence Capital Partners SBIC, L.P. as detailed in § 107.50 of the Regulations.

Notice is hereby given that any interested person may submit written comments on the transaction to the Associate Administrator for Investment, U.S. Small Business Administration, 409 Third Street, SW., Washington, DC 20416.

Dated: January 11, 2007.

**Jaime Guzmán-Fournier,**

*Associate Administrator for Investment .*

[FR Doc. E7–3785 Filed 3–2–07; 8:45 am]

BILLING CODE 8025–01–P

## SMALL BUSINESS ADMINISTRATION

**[Disaster Declaration # 10818]**

### Pennsylvania Disaster # PA–00009

**AGENCY:** Small Business Administration.

**ACTION:** Notice.

**SUMMARY:** This is a Notice of the Presidential declaration of a major disaster for Public Assistance Only for the Commonwealth of Pennsylvania (FEMA–1684–DR), dated 02/23/2007.

*Incident:* Severe Storms and Flooding.

*Incident Period:* 11/16/2006 through 11/17/2006.

*Effective Date:* 02/23/2007.

*Physical Loan Application Deadline Date:* 04/24/2007.

**ADDRESSES:** Submit completed loan applications to: U.S. Small Business Administration, Processing and Disbursement Center, 14925 Kingsport Road, Fort Worth, TX 76155.

**FOR FURTHER INFORMATION CONTACT:** A. Escobar, Office of Disaster Assistance, U.S. Small Business Administration, 409 3rd Street SW, Suite 6050, Washington, DC 20416.

**SUPPLEMENTARY INFORMATION:** Notice is hereby given that as a result of the President's major disaster declaration on 02/23/2007, Private Non-Profit organizations that provide essential services of a governmental nature may file disaster loan applications at the address listed above or other locally announced locations.

The following areas have been determined to be adversely affected by the disaster:

*Primary Counties:*

Bradford, Lackawanna, Luzerne, Sullivan, Susquehanna, Wayne, Wyoming.

*The Interest Rates are:*

| | Percent |
|---|---|
| Other (Including Non-Profit Organizations) With Credit Available Elsewhere | 5.250 |
| Businesses And Non-Profit Organizations Without Credit Available Elsewhere | 4.000 |

The number assigned to this disaster for physical damage is 10818.

(Catalog of Federal Domestic Assistance Number 59008.)

**Herbert L. Mitchell,**

*Associate Administrator for Disaster Assistance.*

[FR Doc. E7–3783 Filed 3–2–07; 8:45 am]

BILLING CODE 8025–01–P

## DEPARTMENT OF TRANSPORTATION

### Federal Railroad Administration

**[Waiver Petition Docket Number FRA–2006–25764]**

### Union Pacific Railroad Company; Notice of Public Hearing and Extension of Public Comment Period

On September 26, 2006, the Federal Railroad Administration (FRA) published a notice in the **Federal Register** (71 FR 56217) announcing the Union Pacific Railroad Company's (UP) request for a waiver of compliance from certain provisions of Title 49 Code of Federal Regulations (CFR) Part 232, *Brake System Safety Standards for Freight and Other Non-passenger Trains and Equipment,* and 49 CFR Part 215, *Railroad Freight Car Safety Standards,* for trains received in interchange from the Ferrocarriles Nationales de Mexico Railroad at the Calexico, California border crossing. Subsequently, on November 17, 2006, FRA published a notice in the **Federal Register** (71 FR 67011) announcing that UP had amended its original petition. Specifically, UP seeks approval to postpone performing Class I brake tests and freight car safety standards inspections until trains arrive at El Centro, California (a distance of approximately 10.1 miles). Trains would receive a Class III brake test-trainline continuity inspection prior to departing Calexico, and move to Heber, California (5.5 miles), where U.S. Customs and Border Protection (CBP) and U.S. Immigration and Customs Enforcement (ICE) personnel would inspect the trains. Upon completion of the CBP and ICE inspections, trains would continue to El Centro, California (4.6 miles), where the postponed brake tests and mechanical inspections would then be performed. Trains would be equipped with a compliant end-of-train device and move to El Centro at a speed not to exceed 20 mph.

FRA received several comments from interested parties requesting a public hearing. FRA hereby grants those requests.

Accordingly, a public hearing is hereby scheduled to begin at 9 a.m., on March 29, 2007, at Fairfield Inn & Suites El Centro, located at 503 Danenburg Drive, El Centro, California 92243. Interested parties are invited to present oral statements at the hearing. The informal hearing will be conducted in accordance with FRA's Rules of Practice (49 CFR 211.25) by a representative designated by FRA. FRA's representative will make an opening statement outlining the scope of the hearing and any additional procedures for the conduct of the hearing. The hearing will be a nonadversarial proceeding in which all interested parties will be given the opportunity to express their views regarding the waiver petition without cross-examination. After all initial statements have been completed, individuals wishing to make a brief rebuttal statement will be given an opportunity to do so in the same order in which the initial statements were made.

In addition, FRA is hereby extending the comment period to April 13, 2007. All communications concerning this waiver petition should identify the appropriate docket number (e.g. Waiver Petition Docket Number FRA–2006–25764) and may be submitted by one of the following methods:

- *Web site: http://dms.dot.gov.* Follow the instructions for submissions on the DOT electronic docket site;
- *Fax:* 202–493–2251;
- *Mail:* Docket Management Facility, U.S. Department of Transportation, 400 Seventh Street, SW., Nassif Building, Room PL–401, Washington, DC 20590–0001; or
- *Hand Delivery:* Room PL–401 on the plaza level of the Nassif Building, 400 Seventh Street, SW., Washington, DC, between 9 a.m. and 5 p.m., Monday through Friday, except Federal holidays.

All written communications concerning these proceedings are available for examination during regular business hours (9 a.m.–5 p.m.) at the above facility. Documents in the public docket are also available for review and copying on the Internet at the docket facility's Web site at *http://dms.dot.gov.*

Anyone is able to search the electronic form of all comments received into any of our dockets by the name of the individual submitting the comment (or signing the comment on behalf of an association, business, labor union, etc.). You may review the DOT's complete Privacy Act Statement in the **Federal Register** published on April 11, 2000 (Volume 65, Number 70; Pages 19477–78). The statement may also be found at *http://dms.dot.gov.*

Issued in Washington, DC on February 28, 2007.

**Edward Pritchard,**

*Director, Office of Safety.*

[FR Doc. E7–3798 Filed 3–2–07; 8:45 am]

BILLING CODE 4910–06–P

## DEPARTMENT OF TRANSPORTATION

### Federal Railroad Administration

**[Docket Number FRA–2006–26094]**

### Petition for Waiver of Compliance

In accordance with Part 211 of Title 49 Code of Federal Regulations (CFR), notice is hereby given that the Federal Railroad Administration (FRA) received a request for a waiver of compliance from certain requirements of its safety standards. The individual petition is described below, including the party seeking relief, the regulatory provisions involved, the nature of the relief being requested, and the petitioner's arguments in favor of relief.

**Maine Narrow Gage Railroad and Museum**

The Maine Narrow Gage Railroad & Museum (MNGR), a 2-foot-gage museum railroad, seeks a waiver of compliance from the requirements of 49 CFR 230.17, One thousand four hundred seventy-two service day inspection. The MNGR is not engaged in general railroad transportation, and provides only railroad tourist excursions on a limited schedule. The MNGR currently consists of approximately 2 miles of track located in the waterfront district of Portland, Maine, and is adjacent to a park.

This waiver would apply to MNGR Locomotive Number 8, and specifically requests temporary use of this locomotive while they are working to bring a second locomotive into compliance with the requirements of 49 CFR Part 230, as was recently accomplished with MNGR Locomotive Number 4. Bringing a second locomotive into compliance with the requirements of 49 CFR 230.17 has become a significant burden to the MNGR due to the limited availability of volunteer manpower, and overall cost. Allowing the temporary use of Locomotive Number 8 would allowing the petitioner to continue to operate the railroad's steam schedule and perform the required maintenance on Locomotive Number 4.

The petitioner believes that this locomotive can be safely operated for up to 3 years, not exceeding 144 service days. Locomotive Number 8 was built by Baldwin Locomotive Works in 1924, for the Bridgton and Harrison Railroad. However, a new, all-welded boiler was installed in 1958, built to the ASME code of construction. As designed, the maximum authorized working pressure for this boiler is 225 psi, but the MNGR derated the pressure to 160 psi to reduce the stress on the boiler's shell. In 1992,

the boiler was inspected and new tubes installed, but the locomotive was never used. Since moving to the MNGR in 1993, Locomotive Number 8 has accumulated fewer than 30 service days and been stored indoors with all washout plugs removed.

Interested parties are invited to participate in these proceedings by submitting written views, data, or comments. FRA does not anticipate scheduling a public hearing in connection with these proceedings since the facts do not appear to warrant a hearing. If any interested party desires an opportunity for oral comment, they should notify FRA in writing before the end of the comment period and specify the basis for their request.

All communications concerning this petition should identify the appropriate docket number (FRA–2006–26094) and may be submitted by one of the following methods:

- *Web site: http://dms.dot.gov.* Follow the instructions for submitting comments on the DOT electronic site;
- *Fax:* 202–493–2251;
- *Mail:* Docket Management Facility, U.S. Department of Transportation, 400 Seventh Street, SW., Nassif Building, Room PL–401, Washington, DC 20590–0001; or
- *Hand Delivery:* Room PL–401 on the plaza level of the Nassif Building, 400 Seventh Street, SW., Washington, DC, between 9 a.m. and 5 p.m., Monday through Friday, except Federal holidays.

Communication received within 45 days of the date of this notice will be considered by FRA prior to final action being taken. Comments received after that date will be considered to the extent practicable. All written communications concerning these proceedings are available for examination during regular business hours (9 a.m.–5 p.m.) at the above facility. All documents in the public docket are also available for inspection and copying on the Internet at the docket facility's Web site at *http://dms.dot.gov.*

Anyone is able to search the electronic form of all comments received into any of our dockets by the name of the individual submitting the comment (or signing the comment on behalf of an association, business, labor union, etc.). You may review the DOT's complete Privacy Act Statement in the **Federal Register** published on April 11, 2000 (Volume 65, Number 70; Pages 19477–78). The Statement may also be found at *http://dms.dot.gov.*

Issued in Washington, DC on February 28, 2007.

**Grady C. Cothen, Jr.,**

*Deputy Associate Administrator for Safety Standards and Program Development.*

[FR Doc. E7–3789 Filed 3–2–07; 8:45 am]

**BILLING CODE 4910–06–P**

## DEPARTMENT OF TRANSPORTATION

### Surface Transportation Board

**[STB Finance Docket No. 34999]**

### Idaho & Sedalia Transportation Company, LLC—Lease Exemption—RCL Rocks, LLC

Idaho & Sedalia Transportation Company, LLC (I&S), a noncarrier, has filed a verified notice of exemption under 49 CFR 1150.31 to acquire (by lease), pursuant to an agreement with RCL Rocks, LLC (RCL), approximately 5.5 miles of rail line, located at Union Pacific Railroad Company's Valentine Subdivision, milepost 741, near Sierra Blanca, TX.

The issue line comprises the East Leg Wye, the West Leg Wye, the Meridian Aggregate Lead, and the Long Runaround and Short Runaround Tracks beginning at milepost 741. The line is further identified as Track Numbers 790, 791, 792, 793, 794, and 795. I&S is leasing the line from RCL for continued rail operations. I&S states that the lease will not result in significant changes in carrier operations.

I&S certifies that its projected annual revenues as a result of the transaction will not exceed $5 million and will not result in the creation of a Class II or Class I carrier. I&S states that it intends to consummate the transaction and effectuate the lease in April 2007 or before then. The earliest this transaction may be consummated is the March 23, 2007 effective date of the exemption (30 days after the exemption was filed).

If the verified notice contains false or misleading information, the exemption is void *ab initio.* Petitions to revoke the exemption under 49 U.S.C. 10502(d) may be filed at any time. The filing of a petition to revoke will not automatically stay the transaction. Petitions for stay must be filed no later than March 16, 2007 (at least 7 days before the exemption becomes effective).

An original and 10 copies of all pleadings, referring to STB Finance Docket No. 34999, must be filed with the Surface Transportation Board, 395 E Street, SW., Washington, DC 20423. In addition, a copy of each pleading must be served on W. Robert Dyer, Jr., Gardere Wynne Sewell, LLP, 1601 Elm Street, Suite 3000, Dallas, TX 75201.

Board decisions and notices are available on our Web site at *http://www.stb.dot.gov.*

Decided: February 23, 2007.

By the Board, David M. Konschnik, Director, Office of Proceedings.

**Vernon A. Williams,**

*Secretary.*

[FR Doc. E7–3567 Filed 3–2–07; 8:45 am]

**BILLING CODE 4915–01–P**

## DEPARTMENT OF THE TREASURY

### Internal Revenue Service

### Open Meeting of the Small Business/Self Employed—Taxpayer Burden Reduction Issue Committee of the Taxpayer Advocacy Panel

**AGENCY:** Internal Revenue Service (IRS), Treasury.

**ACTION:** Cancellation notice.

**SUMMARY:** An open meeting of the Small Business/Self Employed Taxpayer Burden Reduction Issue Committee of the Taxpayer Advocacy Panel has been cancelled (via teleconference). The Taxpayer Advocacy Panel is soliciting public comments, ideas and suggestions on improving customer service at the Internal Revenue Service.

**DATES:** The meeting that was scheduled Tuesday, March 27, 2007 from 12:30 p.m. to 1:30 p.m. ET has been cancelled.

**FOR FURTHER INFORMATION CONTACT:** Marisa Knispel at 1–888–912–1227 or 718–488–3557.

**SUPPLEMENTARY INFORMATION:** Notice is hereby given pursuant to section 10 (a)(2) of the Federal Advisory Committee Act, 5 U.S.C. App. (1988) that an open meeting of the Small Business/Self Employed-Taxpayer Burden Reduction Issue Committee of the Taxpayer Advocacy Panel was cancelled for Tuesday, March 27, 2007, for 12:30 p.m. ET via a telephone conference call as published in the **Federal Register** on February 22, 2007. If you would like to have the TAP consider a written statement, please call 1–888–912–1227 or 718–488–3557 or write Marisa Knispel, TAP Office, 10 Metro Tech Center, 625 Fulton Street, Brooklyn, NY 11201. You may also post comments to the Web site: *http://www.improveirs.org.*

Dated: February 27, 2007.

**John Fay,**

*Acting Director, Taxpayer Advocacy Panel.*

[FR Doc. E7–3727 Filed 3–2–07; 8:45 am]

**BILLING CODE 4830–01–P**

## DEPARTMENT OF THE TREASURY

### Internal Revenue Service

### Open Meeting of the Small Business/Self Employed—Taxpayer Burden Reduction Committee of the Taxpayer Advocacy Panel

**AGENCY:** Internal Revenue Service (IRS) Treasury.

**ACTION:** Notice.

**SUMMARY:** An open meeting of the Small Business/Self Employed—Taxpayer Burden Reduction Committee of the Taxpayer Advocacy Panel will be conducted (via teleconference). The TAP will be discussing issues pertaining to increasing compliance and lessening the burden for Small Business/Self Employed individuals.

**DATES:** The meeting will be held Tuesday, April 3, 2007.

**FOR FURTHER INFORMATION CONTACT:** Marisa Knispel at 1–888–912–1227 or 718–488–3557.

**SUPPLEMENTARY INFORMATION:** Notice is hereby given pursuant to Section 10(a)(2) of the Federal Advisory Committee Act, 5 U.S.C. App. (1988) that an open meeting of the Small Business/Self Employed—Taxpayer Burden Reduction Committee of the Taxpayer Advocacy Panel will be held Tuesday, April 3, 2007 from 12:30 p.m. ET to 1:30 p.m. ET via a telephone conference call. If you would like to have the TAP consider a written statement, please call 1–888–912–1227 or 718–488–3557, or write to Marisa Knispel, TAP Office, 10 Metro Tech Center, 625 Fulton Street, Brooklyn, NY 11201. Due to limited conference lines, notification of intent to participate in the telephone conference call meeting must be made with Marisa Knispel. Ms. Knispel can be reached at 1–888–912–1227 or 718–488–3557, or post comments to the Web site: *http://www.improveirs.org.*

The agenda will include the following: *Various IRS issues.*

Dated: February 27, 2007.

**John Fay,**

*Acting Director, Taxpayer Advocacy Panel.*

[FR Doc. E7–3728 Filed 3–2–07; 8:45 am]

BILLING CODE 4830–01–P

## DEPARTMENT OF THE TREASURY

### Internal Revenue Service

### Open Meeting of the Area 6 Taxpayer Advocacy Panel (Including the States of Arizona, Colorado, Idaho, Montana, New Mexico, North Dakota, Oregon, South Dakota, Utah, Washington and Wyoming)

**AGENCY:** Internal Revenue Service (IRS), Treasury.

**ACTION:** Notice.

**SUMMARY:** An open meeting of the Area 6 committee of the Taxpayer Advocacy Panel will be conducted in Mesa, Arizona. The Taxpayer Advocacy Panel (TAP) is soliciting public comments, ideas, and suggestions on improving customer service at the Internal Revenue Service. The TAP will use citizen input to make recommendations to the Internal Revenue Service.

**DATES:** The meeting will be held Thursday, March 29, 2007, Friday, March 30, 2007 and Saturday, March 31, 2007.

**FOR FURTHER INFORMATION CONTACT:** Dave Coffman at 1–888–912–1227, or 206–220–6096.

**SUPPLEMENTARY INFORMATION:** Notice is hereby given pursuant to Section 10(a)(2) of the Federal Advisory Committee Act, 5 U.S.C. App. (1988) that an open meeting of the Area 6 Taxpayer Advocacy Panel will be held Thursday, March 29, 2007 from 1 p.m. Mountain Standard Time to 2:30 p.m. Mountain Standard Time; Friday, March 30, 2007 from 8:30 a.m. Mountain Standard Time to 5 p.m. Mountain Standard Time; and Saturday, March 31, 2007 from 8:30 a.m. Mountain Standard Time to 11:30 a.m. Mountain Standard Time at 200 North Centennial Way, Mesa, Arizona. The public is invited to make oral comments. Individual comments will be limited to 5 minutes. If you would like to have the TAP consider a written statement, please call 1–888–912–1227 or 206–220–6096, or write to Dave Coffman, TAP Office, 915 2nd Avenue, MS W–406, Seattle, WA 98174 or you can contact us at *http://www.improveirs.org.* Due to limited space, notification of intent to participate in the meeting must be made with Dave Coffman. Mr. Coffman can be reached at 1–888–912–1227 or 206–220–6096.

The agenda will include the following: *Various IRS issues.*

Dated: February 27, 2007.

**John Fay,**

*Acting Director, Taxpayer Advocacy Panel.*

[FR Doc. E7–3731 Filed 3–2–07; 8:45 am]

BILLING CODE 4830–01–P

# Corrections

Federal Register

Vol. 72, No. 42

Monday, March 5, 2007

This section of the FEDERAL REGISTER contains editorial corrections of previously published Presidential, Rule, Proposed Rule, and Notice documents. These corrections are prepared by the Office of the Federal Register. Agency prepared corrections are issued as signed documents and appear in the appropriate document categories elsewhere in the issue.

## ENVIRONMENTAL PROTECTION AGENCY

### 40 CFR Part 180

**[EPA–HQ–OPP–2006–0603 FRL–8114–9]**

### 2–Propenoic Acid, Methyl Ester, Polymer with Ethenyl Acetate, Hydrolyzed, Sodium Salts; Tolerance Exemption

*Correction*

In rule document E7–3118 beginning on page 8913 in the issue of Wednesday, February 28, 2007, make the following correction:

**§ 180.960 [Corrected]**

On page 8916, in the second column, in § 180.960, immediately following the section heading, insert five stars before the table.

[FR Doc. Z7–3118 Filed 3–2–07; 8:45 am]

BILLING CODE 1505–01–D

Federal Register

Monday,
March 5, 2007

# Part II

# Department of the Interior

## Bureau of Indian Affairs

## 25 CFR Part 61

## Preparation of Rolls of Indians; Final Rule

**DEPARTMENT OF THE INTERIOR**

**Bureau of Indian Affairs**

**25 CFR Part 61**

**RIN 1076–AE44**

## Preparation of Rolls of Indians

**AGENCY:** Bureau of Indian Affairs, Interior.

**ACTION:** Final rule.

**SUMMARY:** The Bureau of Indian Affairs is amending its regulations governing the compilation of rolls of Indians in order to open the enrollment application process for the Western Shoshone Identifiable Group of Indians. The enrollment application process will give individuals an opportunity to file applications to share in the Western Shoshone judgment fund distribution authorized under the Western Shoshone Claims Distribution Act of July 7, 2004.

**DATES:** *Effective Date:* This rule becomes effective on April 4, 2007.

**FOR FURTHER INFORMATION CONTACT:** Daisy West, Office of Indian Services, Bureau of Indian Affairs, 1849 C Street, NW., Mail Stop 4513–MIB, Washington, DC, (202) 513–7641.

**SUPPLEMENTARY INFORMATION:** The authority to issue this document is vested in the Secretary of the Interior by 5 U.S.C. 301, 25 U.S.C. 2 and 9, and Public Law 108–270, 118 Stat. 805. The Secretary has delegated this authority to the Principal Deputy Assistant Secretary—Indian Affairs by part 209 of the Departmental Manual.

### Background

The Western Shoshone Judgment Fund Distribution Act dated July 7, 2004, Pub. L. 108–270, 118 Stat. 805 (Act), requires the Secretary of the Interior to establish a judgment fund per capita roll to distribute the judgment funds awarded to the Western Shoshone by the Indian Claims Commission on August 15, 1977, in Docket No. 326–K. The Act also establishes a Western Shoshone Educational Fund with the funds awarded in Dockets Nos. 326–A–1 and 326–A–3. The principal funds will be held in a perpetual trust and the interest funds will be used for educational purposes. Those listed on the per capita payment roll, and their lineal descendants will be eligible to receive the education funds.

### Review of Public Comments

The Bureau of Indian Affairs published a proposed rule to amend the regulations in 25 CFR part 61 on May 19, 2005, 70 FR 28859. The comment period was open for 162 days, from May 19, 2005, to October 28, 2005. Copies of the proposed rule were mailed to approximately 2,300 individuals along with a notice of two public meetings that were being held for the purpose of discussing the proposed rule. The first meeting was held on August 20, 2005, in Elko, Nevada. Approximately 500 individuals attended the meeting. The second meeting was held on August 27, 2005, in Reno, Nevada. Approximately 600 individuals attended the second meeting. We received written comments from 36 individuals concerning the proposed rule. The comments and our responses to the comments are organized into 8 categories. We combined similar comments when the response is the same for each of the comments.

*1. Application Period*

*Comment:* We received several comments regarding the length of the application period. Recommendations were made that the application period should be limited to 180 days because BIA is giving individuals too much time to file applications. Another individual recommended that the application period be for one year.

*Response:* We will not establish a firm application deadline date because we do not know how long it will take BIA to complete the enrollment process. The BIA has a trust responsibility to give potential eligible beneficiaries every opportunity to file an application to share in the judgment fund. Almost 10 years ago the BIA was required to reopen an enrollment application period because the Eighth Circuit Court of Appeals decision in *Loudner* v. *U.S.*, 108 F.3d 896 (8th Cir. 1997), held that the BIA did not give proper notice of the application period, and that 5 months was not a sufficient time period within which to file applications, in light of internal agency delays in implementing distribution of the fund.

BIA has developed a process for establishing the application deadline date that takes into account the time it may take the BIA to implement the distribution. BIA has adopted the process for establishing the application deadline date that was described in the notice of proposed rule. The process adopted for establishing an application deadline is described below under the heading ''Application Deadline'' of this preamble.

*Comment:* The example BIA used to illustrate the process for establishing an application deadline date should be amended to reduce the number of applications received from 10,000 to 5,000 applications.

*Response:* The number used to illustrate the process for establishing an application deadline date is only an example. Reducing the number used as an example will not clarify our explanation of the process.

*2. Eligibility Requirements in 25 CFR 61.4(k)(1)*

*Comment:*

(a) The ¼ blood degree requirement is abusive to their grandchildren. The funds should be distributed to all Western Shoshone descendants regardless of blood degree.

(b) The regulations should be amended to allow those who died prior to the date of the Act to be eligible for a share of the funds. The amendment would allow the decedent's heirs, who might otherwise be ineligible, to share in the decedent's estate.

(c) Minors' parents filed applications on behalf of their children to share in earlier judgment fund distributions. The applications were filed without the minors' consent. Consequently, many of those individuals are ineligible to share in the Western Shoshone judgment fund distribution. The regulation should be amended to say that ''individual Indians of Western Shoshone descent of age 18 or older (at the time of judgment payment roll preparation) that share in any other judgment is ineligible * * *''

*Response:* We cannot adopt the recommendations because the eligibility requirements in the proposed rule were established by Congress in Section 3 of the Western Shoshone Claims Distribution Act. The BIA cannot change the requirements established through enactment of law.

*Comment:* Some of the Western Shoshone are concerned that their application to share in this judgment fund distribution will be denied because they were eligible to share in other awards. They did not apply to share, or receive payment from the other judgment fund distributions. To clarify the issue, the BIA should insert the words ''and did receive'' into 25 CFR 61.4(k)(1)(iv) so that it will read ''Any individual that is certified by the Secretary to be eligible to receive and did receive a per capita payment from any other aboriginal land claim * * *''

*Response:* That situation will not occur. We will limit our review to *1/* judgment fund distributions derived from non-Western Shoshone aboriginal land claims monies, and *2/* to those individuals who are actually listed on an approved judgment fund payment roll, or who have received notification that their application was approved to share in a non-Western Shoshone judgment fund distribution. Only those

individuals would be deemed ineligible to share in the Western Shoshone judgment fund who are listed on an approved non-Western Shoshone judgment fund payment roll, or who have received notification that their application was approved to share in a non-Western Shoshone judgment fund distribution. The words ''and did receive'' would add many more years to the review process because BIA would need to document whether an individual actually received a payment. In some instances it would be impossible to document because the actual checks used to make the per capita payment were destroyed by the Department of the Treasury many years ago. In cases where the cancelled checks still exist, an individual might appeal their denial claiming that they did not endorse the check.

*3. Consultation With Tribal Governments*

*Comment:* The statement should be amended to add the words ''or any political organization.''

*Response:* We will not adopt the recommendation because Executive Order 13175 and 513 DM 2 require us to consult with federally recognized tribes when appropriate. We are not required to consult with political organizations, thus we are not required to evaluate the potential effects of this rule on political organizations.

*4. Information Collection*

*Comment:*

(a) The estimated burden hours on the public to prepare and file an application should be reduced because everyone already has the required information and documentation.

(b) The BIA should reduce the number of applications it expects to receive from 10,000 to 6,000 because of the recommendation to limit the application period to 180 days.

(c) The BIA should reduce its estimate of the number of applicants from 10,000 to 5,000 because of the ¼ Western Shoshone blood degree requirement.

(d) The BIA should reduce its estimate of the time required to review the applications and prepare the roll because BIA already has all of the necessary information concerning the applicants.

*Response:* We used our prior experience in enrollment matters to develop our estimate of the burden hours required for persons to prepare and file an application. We stand by our estimate.

*Comment:* The BIA should collect Social Security Numbers to determine if payments were made to the applicants from earlier judgment fund distributions.

*Response:* The enrollment application form contains a space for the applicant to provide their Social Security Number.

*Comment:* Elders should be asked to verify descendants of family members if no other record exists.

*Response:* The provisions in 25 CFR 61.9 describe the types of records an applicant can use to establish eligibility for enrollment. Affidavits are among the documents listed. The applicant can request an elder to provide an affidavit describing the elder's personal knowledge of an individual's birth date or place of birth, etc.

*Comment:*

(e) The application process should include Internet online filing.

*Response:* BIA does not have access to the Internet.

*5. Review Process*

*Comment:* BIA should use a computer to manage the application and review process.

*Response:* BIA will use computers in all phases of the application review process.

*Comment:* The BIA should make other judgment fund rolls available to BIA staff and contractors. The same process used to develop those rolls should be used to develop the Western Shoshone roll.

*Response:* Other judgment fund per capita rolls will be cross-referenced with the applications we receive under this enrollment process.

*Comment:* The applications should be reviewed as they are received. Once the application period closes, 90 days will be sufficient time period to complete the review. If necessary, additional time could be granted in 90-day increments.

*Response:* The applications will be reviewed in the quickest manner possible. The quickest way is usually by reviewing applications by family group.

*Comment:* BIA should give the general public access to the Indian census rolls prepared between the years 1885 and 1940. Currently, the information is limited to the descendants of those listed on the census rolls.

*Response:* BIA does not release personal information to the general public. The census rolls, however, are available from the National Archives Records Administration (NARA).

*Comment:* BIA should not use the census records prepared by BIA between 1885 and 1940 because the records are inaccurate.

*Response:* The census records are the most comprehensive lists of Western Shoshone Indians available to us. If the census records contain inaccurate or conflicting information pertaining to a particular individual, we will use other records to help clarify or correct the record.

*Comment:* BIA should provide a copy of the completed roll to the Administrative Committee responsible for the Western Shoshone Educational Trust Fund.

*Response:* The Western Shoshone per capita payment roll is subject to the provisions of the Privacy Act. The information contained on that roll will not be released to anyone without the explicit permission of the individuals listed. Each individual who participates in the distribution has the option to decide if they want to release information to a third party concerning their participation in the distribution.

The Administrative Committee will need to develop a procedure for collecting such information from individuals who want to voluntarily reveal their participation in the Western Shoshone judgment fund distribution.

*Comment:* BIA should recruit volunteers to review enrollment applications if BIA does not have sufficient funding to hire staff so that the enrollment process can be complete within a year.

*Response:* BIA is not authorized to recruit volunteers to review enrollment applications. It would be a violation of the prohibition against augmentation of appropriations.

*6. Appeal Process*

*Comment:* BIA should establish a separate appeal process for the Western Shoshone Roll preparation.

*Response:* The appeal process contained in 25 CFR part 62 is sufficient to handle any appeals filed in this process. If it were necessary for a separate appeal process to be established for the Western Shoshone Roll preparation, it would cause at least another year delay to promulgate additional regulations.

*7. Partial Per Capita*

*Comments:*

(a) BIA should make a partial per capita payment to all individuals determined eligible as of the date of the closing of the application period.

(b) BIA should make a partial per capita payment to the elders first.

(c) BIA should define the term ''elderly'' to mean all individuals 55 years of age, or older, on July 7, 2004.

(d) The partial per capita payment should be $10,000.

(e) The partial per capita payment should be 50 percent.

(f) BIA should not make a partial payment.

*Response:* The Secretary has a responsibility to ensure that the judgment funds are distributed to eligible individuals in a timely manner. We anticipate that the review process will be lengthy and may cause hardship to many. We are adopting the recommendation to make a partial per capita payment to all individuals determined eligible as of the date of the closing of the application period. It will encourage applicants to file early. It will also give the Western Shoshone the ability to implement Section 4 of the Western Shoshone Claims Distribution Act prior to the completion of the roll. Section 4 pertains to the distribution of a separate fund, called the Western Shoshone Joint Judgment Funds, for educational purposes.

*8. Informational Meetings*

*Comments:*

(a) Meetings should be held in Reno and Las Vegas, Nevada, to accommodate the Western Shoshone who are not members of federally recognized tribes.

(b) Meetings should be limited to Te-Moak, Duckwater, Yomba, Ely, Duck Valley and Fallon Reservations. Meetings should not be held at other Shoshone and Shoshone-Paiute Reservations.

*Response:* We are adopting the recommendation to hold meetings in Reno and Las Vegas, Nevada. Some of the non-enrolled applicants have indicated that they would feel intrusive if they had to attend a meeting held within another tribe's jurisdiction. We will not adopt the recommendations to limit the locations where meeting will be held because it limits the amount of information available to potential applicants.

**Changes to the Proposed Rule**

We are adding Reno and Las Vegas, Nevada, to the list of locations where we will conduct public meetings for the purpose of answering questions and assisting applicants to prepare and file their applications. We also adopted the recommendation to make a partial per capita payment. The enrollment process will be lengthy and we want to make the funds available to the Western Shoshone as quickly as possible.

**Additional Notice and Public Meetings**

We will take several steps to ensure that all potential applicants are informed of the opening of the enrollment application period.

(1) We will notify all BIA Regional Directors and Agency Superintendents and require them to post notices in regional offices, agency offices, community centers on and near reservations, and in Indian Health Clinics.

(2) We will notify tribal newspapers and newspapers of general circulation in major communities in Nevada, California, Idaho, Arizona, Oregon and Utah.

(3) We will hold community meetings in Reno and Las Vegas, Nevada, and on or near the Indian reservations or the established service areas for the following tribes: Duckwater, Duck Valley, Ely, Fallon, Ft. McDermitt, Te-Moak, Timbisha and Yomba.

At each of the community meetings we will:

(1) Inform potential beneficiaries of the opening of the enrollment process for this judgment fund;

(2) Inform potential beneficiaries of eligibility criteria; and

(3) Help applicants to prepare and file applications.

**Application Deadline**

We will not establish a firm application deadline in this rule. In order to allow adequate time for submitting and processing applications we will establish a deadline using the following three steps:

Step 1. One hundred and eighty days (180) after opening the enrollment application process, we will count all applications that we have received.

Step 2. We will note the date on which we complete the eligibility determinations of 90 percent of the applications that we receive by the date established under Step 1.

Step 3. The application deadline will be 90 days after the date noted in Step 2.

For example, if we receive 10 applications during the first 180 days after opening the application process, the final application deadline date will be 90 days after we process 9 applications. Similarly, if we receive 10,000 applications during the first 180 days after opening the application process, the final application deadline date will be 90 days after we process 9,000 applications.

We will take several steps to ensure that all potential applicants are informed of the application deadline date for filing applications to share in the Western Shoshone judgment fund distribution.

1. We will notify all BIA Regional Directors and Agency Superintendents and require them to post notices in regional offices, agency offices, community centers on and near reservations, and in Indian Health Clinics.

2. We will notify tribal newspapers and newspapers of general circulation in major communities in Nevada, California, Idaho, Arizona, Oregon and Utah.

3. We will hold community meetings in Reno and Las Vegas, Nevada, and on or near the Indian reservations or the established service areas for the following tribes: Duckwater, Duck Valley, Ely, Fallon, Ft. McDermitt, Te-Moak, Timbisha and Yomba.

At each of the community meetings we will:

(1) Inform potential beneficiaries of the application deadline date for filing applications to share in the distribution of the Western Shoshone judgment fund;

(2) Inform potential beneficiaries of eligibility criteria; and

(3) Help applicants to prepare and file applications.

**Partial Per Capita Payment**

A partial per capita payment will be made to all individuals determined eligible as of the closing date of the enrollment application period. It will take us approximately 90 days to determine the total number of applicants, and to update the addresses of all of the individuals listed on the partial per capita roll. We anticipate that the first partial payment will not exceed a 70 percent share of the funds. The remaining funds will be distributed after all of the applications have been reviewed and the appeal process is complete. The final payment of remaining funds will include a second partial payment to those who participated in the first payment, and a full (100 percent) share to all individuals determined eligible after the closing date of the enrollment application period.

**Regulatory Planning and Review (Executive Order 12866)**

This document is not a significant rule and is not subject to review by the Office of Management and Budget under Executive Order 12866.

(1) This rule will not have an effect of $100 million or more on the economy. It will not adversely affect in a material way the economy, productivity competition, jobs, the environment, public health or safety, or State, local, or tribal governments or communities. This rule only involves individual Indians who wish to apply for a share of the Western Shoshone judgment funds.

(2) This rule will not create a serious inconsistency or otherwise interfere with an action taken or planned by another agency. This rule does not impact other agency programs.

(3) This rule does not alter the budgetary effects or entitlement, grants, user fees, or loan programs or the rights or obligations of their recipients. This rule does not impact other agency programs. The funds distributed to eligible applicants will not be considered to be income or resources for any purpose; or be used as a basis for denying or reducing financial assistance or any other benefit to which a household or Western Shoshone member would otherwise be entitled to receive under the Social Security Act, or any other Federal or federally-assisted program. (See subsection 3(c)(3) of Pub. L. 108–270.)

(4) This rule does not raise novel legal or policy issues. All potential legal or policy issues were litigated in several Federal courts during the 1980s and 1990s, before the enactment of Public Law 108–270.

**Regulatory Flexibility Act**

The Department of the Interior certifies that this document will not have a significant economic effect on a substantial number of small entities under the Regulatory Flexibility Act (5 U.S.C. 601 *et seq.*). Because this rule makes technical changes that do not affect the substance of the rules there is no economic effect at all, other than to improve the utility of the rules for users.

**Small Business Regulatory Enforcement Fairness Act (SBREFA)**

This rule is not a major rule under 5 U.S.C. 804(2), the Small Business Regulatory Enforcement Fairness Act. This rule:

(1) Does not have an annual effect on the economy of $100 million or more. This rule does not involve small business; it only involves individuals who wish to apply to share in the judgment fund distribution.

(2) Will not cause a major increase in costs or prices for consumers, individual industries, Federal, State, or local government agencies, or geographic regions.

(3) Does not have significant adverse effects on competition, employment, investment, productivity, innovation, or the ability of U.S.-based enterprises to compete with foreign-based enterprises.

**Unfunded Mandates Reform Act**

This rule does not impose an unfunded mandate on State, local, or tribal governments or the private sector of more than $100 million per year. The rule does not have a significant or unique effect on State, local or tribal governments or the private sector. A statement containing the information required by the Unfunded Mandates Reform Act (1 U.S.C. 1531 *et seq.*) is not required. This rule does not involve small business; it only involves individuals who wish to apply to share in the judgment fund distribution.

**Takings (Executive Order 12630)**

In accordance with Executive Order 12630, the rule does not have significant takings implications. This rule does not affect property rights of the public. This rule does not involve a taking, it only involves individuals who wish to apply to share in the judgment fund distribution. A takings implication assessment is not required.

**Federalism (Executive Order 13132)**

In accordance with Executive Order 13132, this rule does not have significant Federalism effects. A significant Federalism assessment is not required. The rule will not have substantial direct effects on a state or tribe, in the relationship between the Federal Government and a state or tribe, or on the distribution of power and responsibilities among the various levels of government.

**Civil Justice Reform (Executive Order 12988)**

This rule complies with the requirements of Executive Order 12988. Specifically, this rule:

(a) Does not unduly burden the judicial system;

(b) Meets the criteria of section 3(a) requiring that all regulations be reviewed to eliminate errors and ambiguity and be written to minimize litigation; and

(c) Meets the criteria of section 3(b)(2) requiring that all regulations be written in clear language and contain clear legal standards.

Any enrollment appeals will be decided by the Secretary of the Interior under 25 U.S.C. 62.

**Paperwork Reduction Act**

This rule requires collection of information from many enrollees. As required by the Paperwork Reduction Act of 1995 (44 U.S.C. 3507(d)), the Department submitted a copy of the application to the Office of Management and Budget (OMB) for its review. OMB approved the application form and assigned it OMB Control Number 1076–0165 with the expiration date of June 30, 2008.

The information collected is submitted to obtain a benefit, namely a share in the funding distribution. The nature of the information, such as birth/death certificates, etc., indicates the respondent will keep their own copies indefinitely for their own purposes. Because of the nature of some of the information, it will be protected under the Privacy Act, 5 U.S.C. 552a.

The burden of preparing and submitting an application to share in the judgment fund distribution will vary widely depending upon the applicant's age and family history. Individuals 50 years or older will probably spend an average of 1 hour per response. Those individuals 30 years and younger, and non-enrolled tribal members may require 20 hours to prepare a response, including the time for reviewing instructions, gathering and maintaining data, and completing and reviewing the form. The applicants are required to file only once during the estimated 2-year enrollment application period. We estimate that the total burden hours for the entire process is 112,000 hours for a 2-year annual average of 56,000 hours.

We invite comments on:

(1) Whether the proposed collection of information is necessary for the proper performance of the Program, including the practical utility of the information to BIA;

(2) the accuracy of BIA's burden estimates;

(3) ways to enhance the quality, utility, and clarity of the information collected; and

(4) ways to minimize the burden of the collection of information on the respondents, including the use of automated collection techniques or other forms of information technology.

You may submit comments on ways to reduce the burden to the Information Collection Clearance Officer at 625 Herndon Parkway, Herndon, VA 20170.

We will not request nor sponsor a collection of information, and you need not respond to such a request, if there is no valid Office of Management and Budget Control Number.

**National Environmental Policy Act**

This rule does not constitute a major Federal action significantly affecting the quality of the human environment. A detailed statement under the National Environmental Policy Act of 1969 is not required. This rule does not impact the environment; it only involves individuals who wish to apply to share in the judgment fund distribution.

**Consultation With Indian Tribes (Executive Order 13175)**

In accordance with Executive Order 13175, we understand that we must relate to federally recognized Indian tribes on a government-to-government basis. We have evaluated potential effects on federally recognized Indian tribes and have determined that there are no potential effects. The judgment

funds do not belong to any federally recognized tribe, nor can any tribe treat the judgment funds as a tribal resource. The judgment funds will be distributed to individual Indians of Western Shoshone descent, who may or may not be enrolled with a federally recognized tribe.

**Effects on the Nation's Energy Supply (Executive Order 13211)**

In accordance with Executive Order 13211, this regulation does not have a significant effect on the nation's energy supply, distribution, or use. This rule does not involve the nation's energy supply; it only involves individuals who wish to apply to share in the judgment fund distribution.

**Data Quality Act**

In developing this rule, we did not conduct or use a study, experiment, or survey requiring peer review under the Data Quality Act (Pub. L. 106–554).

**List of Subjects in 25 CFR Part 61**

Indians, Indians—claims.

Dated: February 16, 2007.

**Michael D. Olsen,**

*Principal Deputy Assistant Secretary—Indian Affairs.*

■ For the reasons set out in the preamble, Part 61 of Chapter 1 of Title 25 Code of Federal Regulations is amended as set forth below.

## PART 61—PREPARATION OF ROLLS OF INDIANS

■ 1. The authority citation for 25 CFR part 61 is revised to read as follows:

**Authority:** 5 U.S.C. 301; 25 U.S.C. 2 and 9, 1300d–3(b), 1401 *et seq.*, and Pub. L. 108–270.

■ 2. Section 61.3 is revised to read as follows:

### § 61.3 Information collection.

The Office of Management and Budget has reviewed and approved the information collection for § 61.4(k). The OMB Control Number assigned is 1076–0165. A federal agency may not conduct or sponsor, and you are not required to respond to, a collection of information unless it displays a currently valid OMB Control Number.

■ 3. Section 61.4 is amended by adding a new paragraph (k) to read as follows:

### § 61.4 Qualifications for enrollment and the deadline for filing application forms.

* * * * *

(k) *Western Shoshone Identifiable Group of Indians.*

(1) Under section 3(b)(1) of the Act of July 7, 2004, Pub. L. 108–270, 118 Stat. 805, the Secretary will prepare a roll of all individuals who meet the eligibility criteria established under the Act and who file timely applications prior to a date that will be established by a notice published in the **Federal Register**. The roll will be used as the basis for distributing the judgment funds awarded by the Indian Claims Commission to the Western Shoshone Identifiable Group of Indians in Docket No. 326–K. To be eligible a person must:

(i) Have at least ¼ degree of Western Shoshone blood;

(ii) Be living on July 7, 2004;

(iii) Be a citizen of the United States; and

(iv) Not be certified by the Secretary to be eligible to receive a per capita payment from any other judgment fund based on an aboriginal land claim awarded by the Indian Claims Commission, the United States Claims Court, or the United States Court of Federal Claims, that was appropriated on or before July 7, 2004.

(2) Indian census rolls prepared by the Agents or Superintendents at Carson or Western Shoshone Agencies between the years of 1885 and 1940, and other documents acceptable to the Secretary will be used in establishing proof of eligibility of an individual to:

(i) Be listed on the judgment roll; and

(ii) Receive a per capita payment under the Western Shoshone Claims Distribution Act.

(3) Application forms for enrollment must be mailed to Tribal Government Services, BIA-Western Shoshone, Post Office Box 3838, Phoenix, Arizona 85030–3838.

(4) The application period will remain open until further notice.

* * * * *

[FR Doc. E7–3667 Filed 3–2–07; 8:45 am]

BILLING CODE 4310–4J–P

# Reader Aids

**Federal Register**

Vol. 72, No. 42

Monday, March 5, 2007

## CUSTOMER SERVICE AND INFORMATION

| | |
|---|---|
| **Federal Register/Code of Federal Regulations** | |
| General Information, indexes and other finding aids | **202–741–6000** |
| **Laws** | **741–6000** |
| **Presidential Documents** | |
| Executive orders and proclamations | **741–6000** |
| **The United States Government Manual** | **741–6000** |
| **Other Services** | |
| Electronic and on-line services (voice) | **741–6020** |
| Privacy Act Compilation | **741–6064** |
| Public Laws Update Service (numbers, dates, etc.) | **741–6043** |
| TTY for the deaf-and-hard-of-hearing | **741–6086** |

## ELECTRONIC RESEARCH

### World Wide Web

Full text of the daily Federal Register, CFR and other publications is located at: **http://www.gpoaccess.gov/nara/index.html**

Federal Register information and research tools, including Public Inspection List, indexes, and links to GPO Access are located at: **http://www.archives. gov/federal__register**

### E-mail

**FEDREGTOC-L** (Federal Register Table of Contents LISTSERV) is an open e-mail service that provides subscribers with a digital form of the Federal Register Table of Contents. The digital form of the Federal Register Table of Contents includes HTML and PDF links to the full text of each document.

To join or leave, go to **http://listserv.access.gpo.gov** and select *Online mailing list archives, FEDREGTOC-L, Join or leave the list (or change settings);* then follow the instructions.

**PENS** (Public Law Electronic Notification Service) is an e-mail service that notifies subscribers of recently enacted laws.

To subscribe, go to **http://listserv.gsa.gov/archives/publaws-l.html** and select *Join or leave the list (or change settings);* then follow the instructions.

**FEDREGTOC-L** and **PENS** are mailing lists only. We cannot respond to specific inquiries.

**Reference questions.** Send questions and comments about the Federal Register system to: **fedreg.infonara.gov**

The Federal Register staff cannot interpret specific documents or regulations.

## FEDERAL REGISTER PAGES AND DATE, MARCH

9233–9432 ..... 1
9433–9650 ..... 2
9651–9840 ..... 5

## CFR PARTS AFFECTED DURING MARCH

At the end of each month, the Office of the Federal Register publishes separately a List of CFR Sections Affected (LSA), which lists parts and sections affected by documents published since the revision date of each title.

**2 CFR**
376 ..... 9233
3369 ..... 9235

**3 CFR**
**Proclamations:**
8107 ..... 9431
8108 ..... 9641
8109 ..... 9643
8110 ..... 9649
**Executive Orders:**
13288 (See Notice of February 28, 2007) ..... 9645
13391 (See Notice of February 28, 2007) ..... 9645
**Administrative Orders:**
Notices:
Notice of February 28, 2007 ..... 9645

**9 CFR**
317 ..... 9651
381 ..... 9651

**10 CFR**
**Proposed Rules:**
50 ..... 9708

**14 CFR**
39 ..... 9237, 9652, 9655, 9657, 9658, 9660, 9662, 9666
71 ..... 9238, 9239
**Proposed Rules:**
25 ..... 9273
39 ..... 9276, 9475

**15 CFR**
744 ..... 9433

**16 CFR**
0 ..... 9434

**17 CFR**
**Proposed Rules:**
240 ..... 9412
249 ..... 9412

**18 CFR**
**Proposed Rules:**
Ch. I ..... 9281

**20 CFR**
404 ..... 9239
416 ..... 9239
**Proposed Rules:**
404 ..... 9709
416 ..... 9709

**21 CFR**
14 ..... 9674
520 ..... 9242
522 ..... 9242, 9243
558 ..... 9244, 9245

**25 CFR**
61 ..... 9836

**26 CFR**
1 ..... 9245, 9262
**Proposed Rules:**
1 ..... 9284
301 ..... 9712

**29 CFR**
**Proposed Rules:**
1910 ..... 9716

**30 CFR**
942 ..... 9616

**33 CFR**
117 ..... 9435
165 ..... 9436
**Proposed Rules:**
100 ..... 9477

**40 CFR**
52 ..... 9263, 9441
180 ..... 9834
**Proposed Rules:**
63 ..... 9718
81 ..... 9285

**42 CFR**
**Proposed Rules:**
405 ..... 9479
424 ..... 9479
498 ..... 9479

**44 CFR**
67 ..... 9675

**45 CFR**
74 ..... 9233
76 ..... 9233
1169 ..... 9235
**Proposed Rules:**
98 ..... 9491

**47 CFR**
**Proposed Rules:**
76 ..... 9289

**48 CFR**
Ch. 44 ..... 9445

**50 CFR**
229 ..... 9446, 9448
679 ..... 9272, 9450, 9451, 9676
**Proposed Rules:**
223 ..... 9297

622.....9499
648.....9719
665.....9500

## REMINDERS

The items in this list were editorially compiled as an aid to Federal Register users. Inclusion or exclusion from this list has no legal significance.

## RULES GOING INTO EFFECT MARCH 5, 2007

**AGRICULTURE DEPARTMENT**

**Food Safety and Inspection Service**

Food for human consumption:

Food labeling;

Uniform compliance dates; published 3-5-07

**COMMERCE DEPARTMENT**

**National Oceanic and Atmospheric Administration**

Fishery conservation and management:

Alaska; fisheries of Exclusive Economic Zone—

Groundfish; published 3-5-07

**ENVIRONMENTAL PROTECTION AGENCY**

Air quality implementation plans; approval and promulgation; various States:

California; published 1-3-07

Maryland; published 1-3-07

Tennessee; published 1-3-07

**HEALTH AND HUMAN SERVICES DEPARTMENT**

**Food and Drug Administration**

Medical devices:

Hematology and pathology devices—

Cord blood processing system and storage container; classification; published 2-1-07

Organizations, functions, and authority delegations:

Advisory Committee for Pharmaceutical Science; name change; published 3-5-07

**HOMELAND SECURITY DEPARTMENT**

**Federal Emergency Management Agency**

Flood determination elevations:

Kentucky; withdrawn; published 3-5-07

**TRANSPORTATION DEPARTMENT**

**Federal Aviation Administration**

Airworthiness directives:

Airbus; published 1-29-07

Boeing; published 1-29-07

Bombardier; published 1-29-07

Rolls-Royce Deutschland Ltd. & Co.; published 1-29-07

**TRANSPORTATION DEPARTMENT**

**Pipeline and Hazardous Materials Safety Administration**

Pipeline safety:

Technical standards; regulatory references update; published 2-1-07

## COMMENTS DUE NEXT WEEK

**AGRICULTURE DEPARTMENT**

**Animal and Plant Health Inspection Service**

Exportation and importation of animals and animal products:

Bovine spongiform encephalopathy; minimal-risk regions; importation of live bovines and products derived from bovines; comments due by 3-12-07; published 1-9-07 [FR 07-00017]

Cattle export; pre-export tuberculosis and brucellosis testing requirement; elimination; comments due by 3-12-07; published 1-10-07 [FR E7-00111]

**COMMERCE DEPARTMENT**

**Industry and Security Bureau**

Export administration regulations:

License exceptions; destinations of diversion concern; Country Group C designation; comments due by 3-12-07; published 2-26-07 [FR E7-03252]

**CONSUMER PRODUCT SAFETY COMMISSION**

Federal Hazardous Substances Act:

Children's jewelry containing lead; injury risk; comment request; comments due by 3-12-07; published 1-9-07 [FR E7-00109]

**ENERGY DEPARTMENT**

**Energy Efficiency and Renewable Energy Office**

Energy conservation:

Commercial and industrial equipment, energy efficiency program-

Distribution transformers; comments due by 3-12-07; published 2-9-07 [FR E7-02168]

**ENERGY DEPARTMENT**

**Federal Energy Regulatory Commission**

Natural Gas Policy Act:

Interstate natural gas pipelines; capacity release policies; comment request; comments due by 3-12-07; published 1-10-07 [FR E7-00128]

Standards of conduct:

Natural gas pipeline transmission providers; comments due by 3-15-07; published 1-29-07 [FR E7-01118]

**ENVIRONMENTAL PROTECTION AGENCY**

Air pollution; standards of performance for new stationary sources:

Electric utility steam generating units and industrial-commercial-institutional steam generating units; comments due by 3-12-07; published 2-9-07 [FR E7-01881]

Air programs; approval and promulgation; State plans for designated facilities and pollutants:

Florida; comments due by 3-12-07; published 2-8-07 [FR E7-02117]

Air quality implementation plans; approval and promulgation; various States; air quality planning purposes; designation of areas:

California; comments due by 3-16-07; published 2-14-07 [FR E7-02538]

Air quality implementation plans; approval and promulgation; various States:

West Virginia; comments due by 3-12-07; published 2-8-07 [FR E7-02126]

Pesticides; tolerances in food, animal feeds, and raw agricultural commodities:

Beauveria Bassiana HF23; comments due by 3-12-07; published 1-10-07 [FR E7-00170]

Toxic substances:

Significant new uses—

2,3,5,6-tetrachloro-2,5-cyclohexadiene-1,4-dione; comments due by 3-16-07; published 1-30-07 [FR E7-01413]

**FEDERAL DEPOSIT INSURANCE CORPORATION**

Deposit insurance coverage; large-bank deposit insurance determination modernization proposal; comments due by 3-13-07; published 12-13-06 [FR E6-21143]

**HEALTH AND HUMAN SERVICES DEPARTMENT**

**Food and Drug Administration**

Human and animal drugs:

Cattle material; prohibited use in medical products for humans and drugs intended for use in ruminants; comments due by 3-13-07; published 1-12-07 [FR E6-22329]

Human drugs:

Investigational drugs; sale; comments due by 3-14-07; published 12-14-06 [FR 06-09685]

**HOMELAND SECURITY DEPARTMENT**

**Coast Guard**

Pollution:

Mandatory ballast water management reporting and recordkeeping requirements; comments due by 3-16-07; published 11-8-06 [FR E6-18903]

Ports and waterways safety; regulated navigation areas, safety zones, security zones, etc.:

Savannah River, Savannah GA; comments due by 3-12-07; published 1-9-07 [FR 07-00038]

**INTERIOR DEPARTMENT**

**Indian Affairs Bureau**

Indian trust management reform; comments due by 3-12-07; published 1-25-07 [FR 07-00325]

**INTERIOR DEPARTMENT**

Indian trust management reform; comments due by 3-12-07; published 1-25-07 [FR 07-00325]

**PERSONNEL MANAGEMENT OFFICE**

Civil service regulations:

Student loans repayment; comments due by 3-12-07; published 1-9-07 [FR E7-00101]

**SECURITIES AND EXCHANGE COMMISSION**

Electronic Data Gathering, Analysis, and Retrieval System (EDGAR):

Interactive data voluntary reporting program; mutual fund risk/return summary information data tagging; comments due by 3-14-07; published 2-12-07 [FR E7-02254]

Securities:

Credit Rating Agency Reform Act of 2006; implementation—
Nationally recognized statistical rating organizations; comments due by 3-12-07; published 2-9-07 [FR 07-00548]

**TRANSPORTATION DEPARTMENT**

**Federal Aviation Administration**

Airworthiness directives:
Airbus; comments due by 3-12-07; published 2-8-07 [FR E7-01883]
Boeing; comments due by 3-13-07; published 1-12-07 [FR E7-00220]
British Aerospace Regional Aircraft; comments due by 3-14-07; published 2-12-07 [FR E7-02312]
Empresa Brasileira de Aeronautica S.A. (EMBRAER); comments due by 3-12-07; published 1-10-07 [FR E7-00147]
Latinoamericana de Aviacion S.A.; comments due by 3-16-07; published 2-14-07 [FR E7-02508]
Robinson Helicopter Co.; comments due by 3-12-07; published 1-9-07 [FR 07-00026]
Airworthiness standards:
Special conditions—
Aviation Technology Group Javelin Model 100 airplane; comments due by 3-12-07; published 2-8-07 [FR E7-02097]
Quest Aircraft Co. Kodiak Model 100 airplane; comments due by 3-12-07; published 2-8-07 [FR E7-02098]
Class D airspace; comments due by 3-15-07; published 1-9-07 [FR 07-00008]
Class E airspace; comments due by 3-15-07; published 2-26-07 [FR 07-00804]

**TREASURY DEPARTMENT**

**Fiscal Service**

Financial Management Service:
Federal nontax payments to collect delinquent debts owed to States; comments due by 3-12-07; published 1-11-07 [FR E7-00127]

**VETERANS AFFAIRS DEPARTMENT**

Medical benefits:
Medical care or services; reasonable charges; comments due by 3-15-07; published 2-13-07 [FR E7-02391]

## LIST OF PUBLIC LAWS

This is a continuing list of public bills from the current session of Congress which have become Federal laws. It may be used in conjunction with "P L U S" (Public Laws Update Service) on 202–741–6043. This list is also available online at *http://www.archives.gov/federal-register/laws.html*.

The text of laws is not published in the **Federal Register** but may be ordered in "slip law" (individual pamphlet) form from the Superintendent of Documents, U.S. Government Printing Office, Washington, DC 20402 (phone, 202–512–1808). The text will also be made available on the Internet from GPO Access at *http://www.gpoaccess.gov/plaws/index.html*. Some laws may not yet be available.

**H.R. 742 / Public Law 110–6**

Antitrust Modernization Commission Extension Act of 2007 (Feb. 26, 2007; 121 Stat. 61; 1 page)

**Last List February 20, 2007**

## Public Laws Electronic Notification Service (PENS)

**PENS** is a free electronic mail notification service of newly enacted public laws. To subscribe, go to *http://listserv.gsa.gov/archives/publaws-l.html*

**Note:** This service is strictly for E-mail notification of new laws. The text of laws is not available through this service. **PENS** cannot respond to specific inquiries sent to this address.

## CFR CHECKLIST

This checklist, prepared by the Office of the Federal Register, is published weekly. It is arranged in the order of CFR titles, stock numbers, prices, and revision dates.

An asterisk (*) precedes each entry that has been issued since last week and which is now available for sale at the Government Printing Office.

A checklist of current CFR volumes comprising a complete CFR set, also appears in the latest issue of the LSA (List of CFR Sections Affected), which is revised monthly.

The CFR is available free on-line through the Government Printing Office's GPO Access Service at http://www.gpoaccess.gov/cfr/index.html. For information about GPO Access call the GPO User Support Team at 1-888-293-6498 (toll free) or 202-512-1530.

The annual rate for subscription to all revised paper volumes is $1389.00 domestic, $555.60 additional for foreign mailing.

Mail orders to the Superintendent of Documents, Attn: New Orders, P.O. Box 371954, Pittsburgh, PA 15250–7954. All orders must be accompanied by remittance (check, money order, GPO Deposit Account, VISA, Master Card, or Discover). Charge orders may be telephoned to the GPO Order Desk, Monday through Friday, at **(202) 512–1800** from 8:00 a.m. to 4:00 p.m. eastern time, or FAX your charge orders to **(202) 512-2250**.

| Title | Stock Number | Price | Revision Date |
|---|---|---|---|
| **1** | (869–062–00001–4) | 5.00 | [4] Jan. 1, 2007 |
| **2** | (869–060–00002–0) | 5.00 | Jan. 1, 2006 |
| **3** (2005 Compilation and Parts 100 and 102) | (869–060–00003–8) | 35.00 | [1] Jan. 1, 2006 |
| **4** | (869–062–00004–9) | 10.00 | [5] Jan. 1, 2007 |
| **5 Parts:** | | | |
| *1–699 | (869–062–00005–7) | 60.00 | Jan. 1, 2007 |
| 700–1199 | (869–060–00006–2) | 50.00 | Jan. 1, 2006 |
| 1200–End | (869–060–00007–1) | 61.00 | Jan. 1, 2006 |
| **6** | (869–060–00008–9) | 10.50 | Jan. 1, 2006 |
| **7 Parts:** | | | |
| 1–26 | (869–062–00009–0) | 44.00 | Jan. 1, 2007 |
| 27–52 | (869–062–00010–3) | 49.00 | Jan. 1, 2007 |
| *53–209 | (869–062–00011–1) | 37.00 | Jan. 1, 2007 |
| 210–299 | (869–060–00012–7) | 62.00 | Jan. 1, 2006 |
| *300–399 | (869–062–00013–8) | 46.00 | Jan. 1, 2007 |
| 400–699 | (869–060–00014–3) | 42.00 | Jan. 1, 2006 |
| 700–899 | (869–060–00015–1) | 43.00 | Jan. 1, 2006 |
| 900–999 | (869–060–00016–0) | 60.00 | Jan. 1, 2006 |
| 1000–1199 | (869–060–00017–8) | 22.00 | Jan. 1, 2006 |
| 1200–1599 | (869–060–00018–6) | 61.00 | Jan. 1, 2006 |
| 1600–1899 | (869–060–00019–4) | 64.00 | Jan. 1, 2006 |
| 1900–1939 | (869–062–00020–1) | 31.00 | Jan. 1, 2007 |
| 1940–1949 | (869–062–00021–9) | 50.00 | [5] Jan. 1, 2007 |
| 1950–1999 | (869–060–00022–4) | 46.00 | Jan. 1, 2006 |
| 2000–End | (869–060–00023–2) | 50.00 | Jan. 1, 2006 |
| **8** | (869–060–00024–1) | 63.00 | Jan. 1, 2006 |
| **9 Parts:** | | | |
| 1–199 | (869–060–00025–9) | 61.00 | Jan. 1, 2006 |
| 200–End | (869–060–00026–7) | 58.00 | Jan. 1, 2006 |
| **10 Parts:** | | | |
| 1–50 | (869–060–00027–5) | 61.00 | Jan. 1, 2006 |
| 51–199 | (869–060–00028–3) | 58.00 | Jan. 1, 2006 |
| 200–499 | (869–060–00029–1) | 46.00 | Jan. 1, 2006 |
| 500–End | (869–060–00030–5) | 62.00 | Jan. 1, 2006 |
| **11** | (869–060–00031–3) | 41.00 | Jan. 1, 2006 |
| **12 Parts:** | | | |
| 1–199 | (869–062–00032–4) | 34.00 | Jan. 1, 2007 |
| 200–219 | (869–060–00033–0) | 37.00 | Jan. 1, 2006 |
| *220–299 | (869–062–00034–1) | 61.00 | Jan. 1, 2007 |
| 300–499 | (869–060–00035–6) | 47.00 | Jan. 1, 2006 |
| 500–599 | (869–060–00036–4) | 39.00 | Jan. 1, 2006 |
| 600–899 | (869–060–00037–2) | 56.00 | Jan. 1, 2006 |
| 900–End | (869–060–00038–1) | 50.00 | Jan. 1, 2006 |
| **13** | (869–060–00039–9) | 55.00 | Jan. 1, 2006 |
| **14 Parts:** | | | |
| 1–59 | (869–060–00040–2) | 63.00 | Jan. 1, 2006 |
| 60–139 | (869–060–00041–1) | 61.00 | Jan. 1, 2006 |
| 140–199 | (869–060–00042–9) | 30.00 | Jan. 1, 2006 |
| 200–1199 | (869–060–00043–7) | 50.00 | Jan. 1, 2006 |
| 1200–End | (869–060–00044–5) | 45.00 | Jan. 1, 2006 |
| **15 Parts:** | | | |
| 0–299 | (869–060–00045–3) | 40.00 | Jan. 1, 2006 |
| 300–799 | (869–060–00046–1) | 60.00 | Jan. 1, 2006 |
| 800–End | (869–060–00047–0) | 42.00 | Jan. 1, 2006 |
| **16 Parts:** | | | |
| 0–999 | (869–060–00048–8) | 50.00 | Jan. 1, 2006 |
| 1000–End | (869–060–00049–6) | 60.00 | Jan. 1, 2006 |
| **17 Parts:** | | | |
| 1–199 | (869–060–00051–8) | 50.00 | Apr. 1, 2006 |
| 200–239 | (869–060–00052–6) | 60.00 | Apr. 1, 2006 |
| 240–End | (869–060–00053–4) | 62.00 | Apr. 1, 2006 |
| **18 Parts:** | | | |
| 1–399 | (869–060–00054–2) | 62.00 | Apr. 1, 2006 |
| 400–End | (869–060–00055–1) | 26.00 | [7] Apr. 1, 2006 |
| **19 Parts:** | | | |
| 1–140 | (869–060–00056–9) | 61.00 | Apr. 1, 2006 |
| 141–199 | (869–060–00057–7) | 58.00 | Apr. 1, 2006 |
| 200–End | (869–060–00058–5) | 31.00 | Apr. 1, 2006 |
| **20 Parts:** | | | |
| 1–399 | (869–060–00059–3) | 50.00 | Apr. 1, 2006 |
| 400–499 | (869–060–00060–7) | 64.00 | Apr. 1, 2006 |
| 500–End | (869–060–00061–5) | 63.00 | Apr. 1, 2006 |
| **21 Parts:** | | | |
| 1–99 | (869–060–00062–3) | 40.00 | Apr. 1, 2006 |
| 100–169 | (869–060–00063–1) | 49.00 | Apr. 1, 2006 |
| 170–199 | (869–060–00064–0) | 50.00 | Apr. 1, 2006 |
| 200–299 | (869–060–00065–8) | 17.00 | Apr. 1, 2006 |
| 300–499 | (869–060–00066–6) | 30.00 | Apr. 1, 2006 |
| 500–599 | (869–060–00067–4) | 47.00 | Apr. 1, 2006 |
| 600–799 | (869–060–00068–2) | 15.00 | Apr. 1, 2006 |
| 800–1299 | (869–060–00069–1) | 60.00 | Apr. 1, 2006 |
| 1300–End | (869–060–00070–4) | 25.00 | Apr. 1, 2006 |
| **22 Parts:** | | | |
| 1–299 | (869–060–00071–2) | 63.00 | Apr. 1, 2006 |
| 300–End | (869–060–00072–1) | 45.00 | [8] Apr. 1, 2006 |
| **23** | (869–060–00073–9) | 45.00 | Apr. 1, 2006 |
| **24 Parts:** | | | |
| 0–199 | (869–060–00074–7) | 60.00 | Apr. 1, 2006 |
| 200–499 | (869–060–00075–5) | 50.00 | Apr. 1, 2006 |
| 500–699 | (869–060–00076–3) | 30.00 | Apr. 1, 2006 |
| 700–1699 | (869–060–00077–1) | 61.00 | Apr. 1, 2006 |
| 1700–End | (869–060–00078–0) | 30.00 | Apr. 1, 2006 |
| **25** | (869–060–00079–8) | 64.00 | Apr. 1, 2006 |
| **26 Parts:** | | | |
| §§ 1.0–1–1.60 | (869–060–00080–1) | 49.00 | Apr. 1, 2006 |
| §§ 1.61–1.169 | (869–060–00081–0) | 63.00 | Apr. 1, 2006 |
| §§ 1.170–1.300 | (869–060–00082–8) | 60.00 | Apr. 1, 2006 |
| §§ 1.301–1.400 | (869–060–00083–6) | 47.00 | Apr. 1, 2006 |
| §§ 1.401–1.440 | (869–060–00084–4) | 56.00 | Apr. 1, 2006 |
| §§ 1.441–1.500 | (869–060–00085–2) | 58.00 | Apr. 1, 2006 |
| §§ 1.501–1.640 | (869–060–00086–1) | 49.00 | Apr. 1, 2006 |
| §§ 1.641–1.850 | (869–060–00087–9) | 61.00 | Apr. 1, 2006 |
| §§ 1.851–1.907 | (869–060–00088–7) | 61.00 | Apr. 1, 2006 |
| §§ 1.908–1.1000 | (869–060–00089–5) | 60.00 | Apr. 1, 2006 |
| §§ 1.1001–1.1400 | (869–060–00090–9) | 61.00 | Apr. 1, 2006 |
| §§ 1.1401–1.1550 | (869–060–00091–2) | 58.00 | Apr. 1, 2006 |
| §§ 1.1551–End | (869–060–00092–5) | 50.00 | Apr. 1, 2006 |
| 2–29 | (869–060–00093–3) | 60.00 | Apr. 1, 2006 |
| 30–39 | (869–060–00094–1) | 41.00 | Apr. 1, 2006 |
| 40–49 | (869–060–00095–0) | 28.00 | Apr. 1, 2006 |
| 50–299 | (869–060–00096–8) | 42.00 | Apr. 1, 2006 |

| Title | Stock Number | Price | Revision Date |
|---|---|---|---|
| 300–499 | (869–060–00097–6) | 61.00 | Apr. 1, 2006 |
| 500–599 | (869–060–00098–4) | 12.00 | [6] Apr. 1, 2006 |
| 600–End | (869–060–00099–2) | 17.00 | Apr. 1, 2006 |
| **27 Parts:** | | | |
| 1–399 | (869–060–00100–0) | 64.00 | Apr. 1, 2006 |
| 400–End | (869–060–00101–8) | 18.00 | Apr. 1, 2006 |
| **28 Parts:** | | | |
| 0–42 | (869–060–00102–6) | 61.00 | July 1, 2006 |
| 43–End | (869–060–00103–4) | 60.00 | July 1, 2006 |
| **29 Parts:** | | | |
| 0–99 | (869–060–00104–2) | 50.00 | July 1, 2006 |
| 100–499 | (869–060–00105–1) | 23.00 | July 1, 2006 |
| 500–899 | (869–060–00106–9) | 61.00 | July 1, 2006 |
| 900–1899 | (869–060–00107–7) | 36.00 | July 1, 2006 |
| 1900–1910 (§§ 1900 to 1910.999) | (869–060–00108–5) | 61.00 | July 1, 2006 |
| 1910 (§§ 1910.1000 to end) | (869–060–00109–3) | 46.00 | July 1, 2006 |
| 1911–1925 | (869–060–00110–7) | 30.00 | July 1, 2006 |
| 1926 | (869–060–00111–5) | 50.00 | July 1, 2006 |
| 1927–End | (869–060–00112–3) | 62.00 | July 1, 2006 |
| **30 Parts:** | | | |
| 1–199 | (869–060–00113–1) | 57.00 | July 1, 2006 |
| 200–699 | (869–060–00114–0) | 50.00 | July 1, 2006 |
| 700–End | (869–060–00115–8) | 58.00 | July 1, 2006 |
| **31 Parts:** | | | |
| 0–199 | (869–060–00116–6) | 41.00 | July 1, 2006 |
| 200–499 | (869–060–00117–4) | 46.00 | July 1, 2006 |
| 500–End | (869–060–00118–2) | 62.00 | July 1, 2006 |
| **32 Parts:** | | | |
| 1–39, Vol. I | | 15.00 | [2] July 1, 1984 |
| 1–39, Vol. II | | 19.00 | [2] July 1, 1984 |
| 1–39, Vol. III | | 18.00 | [2] July 1, 1984 |
| 1–190 | (869–060–00119–1) | 61.00 | July 1, 2006 |
| 191–399 | (869–060–00120–4) | 63.00 | July 1, 2006 |
| 400–629 | (869–060–00121–2) | 50.00 | July 1, 2006 |
| 630–699 | (869–060–00122–1) | 37.00 | July 1, 2006 |
| 700–799 | (869–060–00123–9) | 46.00 | July 1, 2006 |
| 800–End | (869–060–00124–7) | 47.00 | July 1, 2006 |
| **33 Parts:** | | | |
| 1–124 | (869–060–00125–5) | 57.00 | July 1, 2006 |
| 125–199 | (869–060–00126–3) | 61.00 | July 1, 2006 |
| 200–End | (869–060–00127–1) | 57.00 | July 1, 2006 |
| **34 Parts:** | | | |
| 1–299 | (869–060–00128–0) | 50.00 | July 1, 2006 |
| 300–399 | (869–060–00129–8) | 40.00 | July 1, 2006 |
| 400–End & 35 | (869–060–00130–1) | 61.00 | [9] July 1, 2006 |
| **36 Parts:** | | | |
| 1–199 | (869–060–00131–0) | 37.00 | July 1, 2006 |
| 200–299 | (869–060–00132–8) | 37.00 | July 1, 2006 |
| 300–End | (869–060–00133–6) | 61.00 | July 1, 2006 |
| **37** | (869–060–00134–4) | 58.00 | July 1, 2006 |
| **38 Parts:** | | | |
| 0–17 | (869–060–00135–2) | 60.00 | July 1, 2006 |
| 18–End | (869–060–00136–1) | 62.00 | July 1, 2006 |
| **39** | (869–060–00137–9) | 42.00 | July 1, 2006 |
| **40 Parts:** | | | |
| 1–49 | (869–060–00138–7) | 60.00 | July 1, 2006 |
| 50–51 | (869–060–00139–5) | 45.00 | July 1, 2006 |
| 52 (52.01–52.1018) | (869–060–00140–9) | 60.00 | July 1, 2006 |
| 52 (52.1019–End) | (869–060–00141–7) | 61.00 | July 1, 2006 |
| 53–59 | (869–060–00142–5) | 31.00 | July 1, 2006 |
| 60 (60.1–End) | (869–060–00143–3) | 58.00 | July 1, 2006 |
| 60 (Apps) | (869–060–00144–7) | 57.00 | July 1, 2006 |
| 61–62 | (869–060–00145–0) | 45.00 | July 1, 2006 |
| 63 (63.1–63.599) | (869–060–00146–8) | 58.00 | July 1, 2006 |
| 63 (63.600–63.1199) | (869–060–00147–6) | 50.00 | July 1, 2006 |
| 63 (63.1200–63.1439) | (869–060–00148–4) | 50.00 | July 1, 2006 |
| 63 (63.1440–63.6175) | (869–060–00149–2) | 32.00 | July 1, 2006 |
| 63 (63.6580–63.8830) | (869–060–00150–6) | 32.00 | July 1, 2006 |
| 63 (63.8980–End) | (869–060–00151–4) | 35.00 | July 1, 2006 |
| 64–71 | (869–060–00152–2) | 29.00 | July 1, 2006 |
| 72–80 | (869–060–00153–1) | 62.00 | July 1, 2006 |
| 81–85 | (869–060–00154–9) | 60.00 | July 1, 2006 |
| 86 (86.1–86.599–99) | (869–060–00155–7) | 58.00 | July 1, 2006 |
| 86 (86.600–1–End) | (869–060–00156–5) | 50.00 | July 1, 2006 |
| 87–99 | (869–060–00157–3) | 60.00 | July 1, 2006 |
| 100–135 | (869–060–00158–1) | 45.00 | July 1, 2006 |
| 136–149 | (869–060–00159–0) | 61.00 | July 1, 2006 |
| 150–189 | (869–060–00160–3) | 50.00 | July 1, 2006 |
| 190–259 | (869–060–00161–1) | 39.00 | July 1, 2006 |
| 260–265 | (869–060–00162–0) | 50.00 | July 1, 2006 |
| 266–299 | (869–060–00163–8) | 50.00 | July 1, 2006 |
| 300–399 | (869–060–00164–6) | 42.00 | July 1, 2006 |
| 400–424 | (869–060–00165–4) | 56.00 | July 1, 2006 |
| 425–699 | (869–060–00166–2) | 61.00 | July 1, 2006 |
| 700–789 | (869–060–00167–1) | 61.00 | July 1, 2006 |
| 790–End | (869–060–00168–9) | 61.00 | July 1, 2006 |
| **41 Chapters:** | | | |
| 1, 1–1 to 1–10 | | 13.00 | [3] July 1, 1984 |
| 1, 1–11 to Appendix, 2 (2 Reserved) | | 13.00 | [3] July 1, 1984 |
| 3–6 | | 14.00 | [3] July 1, 1984 |
| 7 | | 6.00 | [3] July 1, 1984 |
| 8 | | 4.50 | [3] July 1, 1984 |
| 9 | | 13.00 | [3] July 1, 1984 |
| 10–17 | | 9.50 | [3] July 1, 1984 |
| 18, Vol. I, Parts 1–5 | | 13.00 | [3] July 1, 1984 |
| 18, Vol. II, Parts 6–19 | | 13.00 | [3] July 1, 1984 |
| 18, Vol. III, Parts 20–52 | | 13.00 | [3] July 1, 1984 |
| 19–100 | | 13.00 | [3] July 1, 1984 |
| 1–100 | (869–060–00169–7) | 24.00 | July 1, 2006 |
| 101 | (869–060–00170–1) | 21.00 | [9] July 1, 2006 |
| 102–200 | (869–060–00171–9) | 56.00 | July 1, 2006 |
| 201–End | (869–060–00172–7) | 24.00 | July 1, 2006 |
| **42 Parts:** | | | |
| 1–399 | (869–060–00173–5) | 61.00 | Oct. 1, 2006 |
| 400–413 | (869–060–00174–3) | 32.00 | Oct. 1, 2006 |
| 414–429 | (869–060–00175–1) | 32.00 | Oct. 1, 2006 |
| 430–End | (869–060–00176–0) | 64.00 | Oct. 1, 2006 |
| **43 Parts:** | | | |
| 1–999 | (869–060–00177–8) | 56.00 | Oct. 1, 2006 |
| 1000–end | (869–060–00178–6) | 62.00 | Oct. 1, 2006 |
| **44** | (869–060–00179–4) | 50.00 | Oct. 1, 2006 |
| **45 Parts:** | | | |
| 1–199 | (869–060–00180–8) | 60.00 | Oct. 1, 2006 |
| 200–499 | (869–060–00181–6) | 34.00 | Oct. 1, 2006 |
| 500–1199 | (869–060–00182–4) | 56.00 | Oct. 1, 2006 |
| 1200–End | (869–060–00183–2) | 61.00 | Oct. 1, 2006 |
| **46 Parts:** | | | |
| 1–40 | (869–060–00184–1) | 46.00 | Oct. 1, 2006 |
| 41–69 | (869–060–00185–9) | 39.00 | Oct. 1, 2006 |
| 70–89 | (869–060–00186–7) | 14.00 | Oct. 1, 2006 |
| 90–139 | (869–060–00187–5) | 44.00 | Oct. 1, 2006 |
| 140–155 | (869–060–00188–3) | 25.00 | Oct. 1, 2006 |
| 156–165 | (869–060–00189–1) | 34.00 | Oct. 1, 2006 |
| 166–199 | (869–060–00190–5) | 46.00 | Oct. 1, 2006 |
| 200–499 | (869–060–00191–3) | 40.00 | Oct. 1, 2006 |
| 500–End | (869–060–00192–1) | 25.00 | Oct. 1, 2006 |
| **47 Parts:** | | | |
| 0–19 | (869–060–00193–0) | 61.00 | Oct. 1, 2006 |
| 20–39 | (869–060–00194–8) | 46.00 | Oct. 1, 2006 |
| 40–69 | (869–060–00195–6) | 40.00 | Oct. 1, 2006 |
| 70–79 | (869–060–00196–4) | 61.00 | Oct. 1, 2006 |
| 80–End | (869–060–00197–2) | 61.00 | Oct. 1, 2006 |
| **48 Chapters:** | | | |
| 1 (Parts 1–51) | (869–060–00198–1) | 63.00 | Oct. 1, 2006 |
| 1 (Parts 52–99) | (869–060–00199–9) | 49.00 | Oct. 1, 2006 |
| 2 (Parts 201–299) | (869–060–00200–6) | 50.00 | Oct. 1, 2006 |
| 3–6 | (869–060–00201–4) | 34.00 | Oct. 1, 2006 |
| 7–14 | (869–060–00202–2) | 56.00 | Oct. 1, 2006 |

| Title | Stock Number | Price | Revision Date |
|---|---|---|---|
| 15–28 | (869–060–00203–1) | 47.00 | Oct. 1, 2006 |
| 29–End | (869–060–00204–9) | 47.00 | Oct. 1, 2006 |
| **49 Parts:** | | | |
| 1–99 | (869–060–00205–7) | 60.00 | Oct. 1, 2006 |
| 100–185 | (869–060–00206–5) | 63.00 | Oct. 1, 2006 |
| 186–199 | (869–060–00207–3) | 23.00 | Oct. 1, 2006 |
| 200–299 | (869–060–00208–1) | 32.00 | Oct. 1, 2006 |
| 300–399 | (869–060–00209–0) | 32.00 | Oct. 1, 2006 |
| 400–599 | (869–060–00210–3) | 64.00 | Oct. 1, 2006 |
| 600–999 | (869–060–00211–1) | 19.00 | Oct. 1, 2006 |
| 1000–1199 | (869–060–00212–0) | 28.00 | Oct. 1, 2006 |
| 1200–End | (869–060–00213–8) | 34.00 | Oct. 1, 2006 |
| **50 Parts:** | | | |
| 1–16 | (869–060–00214–6) | 11.00 | [10] Oct. 1, 2006 |
| 17.1–17.95(b) | (869–060–00215–4) | 32.00 | Oct. 1, 2006 |
| 17.95(c)–end | (869–060–00216–2) | 32.00 | Oct. 1, 2006 |
| 17.96–17.99(h) | (869–060–00217–1) | 61.00 | Oct. 1, 2006 |
| 17.99(i)–end and 17.100–end | (869–060–00218–9) | 47.00 | [10] Oct. 1, 2006 |
| 18–199 | (869–060–00219–7) | 50.00 | Oct. 1, 2006 |
| 200–599 | (869–060–00220–1) | 45.00 | Oct. 1, 2006 |
| 600–659 | (869–060–00221–9) | 31.00 | Oct. 1, 2006 |
| 660–End | (869–060–00222–7) | 31.00 | Oct. 1, 2006 |
| CFR Index and Findings Aids | (869–060–00050–0) | 62.00 | Jan. 1, 2006 |
| Complete 2007 CFR set | | 1,389.00 | 2007 |
| Microfiche CFR Edition: | | | |
| Subscription (mailed as issued) | | 332.00 | 2007 |
| Individual copies | | 4.00 | 2007 |
| Complete set (one-time mailing) | | 332.00 | 2006 |
| Complete set (one-time mailing) | | 325.00 | 2005 |

[1] Because Title 3 is an annual compilation, this volume and all previous volumes should be retained as a permanent reference source.

[2] The July 1, 1985 edition of 32 CFR Parts 1–189 contains a note only for Parts 1–39 inclusive. For the full text of the Defense Acquisition Regulations in Parts 1–39, consult the three CFR volumes issued as of July 1, 1984, containing those parts.

[3] The July 1, 1985 edition of 41 CFR Chapters 1–100 contains a note only for Chapters 1 to 49 inclusive. For the full text of procurement regulations in Chapters 1 to 49, consult the eleven CFR volumes issued as of July 1, 1984 containing those chapters.

[4] No amendments to this volume were promulgated during the period January 1, 2005, through January 1, 2006. The CFR volume issued as of January 1, 2005 should be retained.

[5] No amendments to this volume were promulgated during the period January 1, 2006, through January 1, 2007. The CFR volume issued as of January 6, 2006 should be retained.

[6] No amendments to this volume were promulgated during the period April 1, 2000, through April 1, 2006. The CFR volume issued as of April 1, 2000 should be retained.

[7] No amendments to this volume were promulgated during the period April 1, 2005, through April 1, 2006. The CFR volume issued as of April 1, 2004 should be retained.

[8] No amendments to this volume were promulgated during the period April 1, 2005, through April 1, 2006. The CFR volume issued as of April 1, 2005 should be retained.

[9] No amendments to this volume were promulgated during the period July 1, 2005, through July 1, 2006. The CFR volume issued as of July 1, 2005 should be retained.

[10] No amendments to this volume were promulgated during the period October 1, 2005, through October 1, 2006. The CFR volume issued as of October 1, 2005 should be retained.