AUTHENTICATED U.S. GOVERNMENT INFORMATION GPO

Federal Register

4–23–07 Monday
Vol. 72 No. 77 Apr. 23, 2007

Pages 20029–20220

The **FEDERAL REGISTER** (ISSN 0097–6326) is published daily, Monday through Friday, except official holidays, by the Office of the Federal Register, National Archives and Records Administration, Washington, DC 20408, under the Federal Register Act (44 U.S.C. Ch. 15) and the regulations of the Administrative Committee of the Federal Register (1 CFR Ch. I). The Superintendent of Documents, U.S. Government Printing Office, Washington, DC 20402 is the exclusive distributor of the official edition. Periodicals postage is paid at Washington, DC.

The **FEDERAL REGISTER** provides a uniform system for making available to the public regulations and legal notices issued by Federal agencies. These include Presidential proclamations and Executive Orders, Federal agency documents having general applicability and legal effect, documents required to be published by act of Congress, and other Federal agency documents of public interest.

Documents are on file for public inspection in the Office of the Federal Register the day before they are published, unless the issuing agency requests earlier filing. For a list of documents currently on file for public inspection, see *www.archives.gov.*

The seal of the National Archives and Records Administration authenticates the Federal Register as the official serial publication established under the Federal Register Act. Under 44 U.S.C. 1507, the contents of the **Federal Register** shall be judicially noticed.

The **Federal Register** is published in paper and on 24x microfiche. It is also available online at no charge as one of the databases on GPO Access, a service of the U.S. Government Printing Office.

The online edition of the **Federal Register** *www.gpoaccess.gov/nara,* available through GPO Access, is issued under the authority of the Administrative Committee of the Federal Register as the official legal equivalent of the paper and microfiche editions (44 U.S.C. 4101 and 1 CFR 5.10). It is updated by 6 a.m. each day the **Federal Register** is published and includes both text and graphics from Volume 59, Number 1 (January 2, 1994) forward.

For more information about GPO Access, contact the GPO Access User Support Team, call toll free 1-888-293-6498; DC area 202-512-1530; fax at 202-512-1262; or via e-mail at *gpoaccess@gpo.gov.* The Support Team is available between 7:00 a.m. and 9:00 p.m. Eastern Time, Monday–Friday, except official holidays.

The annual subscription price for the **Federal Register** paper edition is $749 plus postage, or $808, plus postage, for a combined **Federal Register, Federal Register** Index and List of CFR Sections Affected (LSA) subscription; the microfiche edition of the **Federal Register** including the **Federal Register** Index and LSA is $165, plus postage. Six month subscriptions are available for one-half the annual rate. The prevailing postal rates will be applied to orders according to the delivery method requested. The price of a single copy of the daily **Federal Register,** including postage, is based on the number of pages: $11 for an issue containing less than 200 pages; $22 for an issue containing 200 to 400 pages; and $33 for an issue containing more than 400 pages. Single issues of the microfiche edition may be purchased for $3 per copy, including postage. Remit check or money order, made payable to the Superintendent of Documents, or charge to your GPO Deposit Account, VISA, MasterCard, American Express, or Discover. Mail to: New Orders, Superintendent of Documents, P.O. Box 371954, Pittsburgh, PA 15250-7954; or call toll free 1-866-512-1800, DC area 202-512-1800; or go to the U.S. Government Online Bookstore site, see *bookstore.gpo.gov.*

There are no restrictions on the republication of material appearing in the **Federal Register.**

How To Cite This Publication: Use the volume number and the page number. Example: 72 FR 12345.

Postmaster: Send address changes to the Superintendent of Documents, Federal Register, U.S. Government Printing Office, Washington DC 20402, along with the entire mailing label from the last issue received.

SUBSCRIPTIONS AND COPIES

PUBLIC

Subscriptions:

Paper or fiche	**202–512–1800**
Assistance with public subscriptions	**202–512–1806**

General online information **202–512–1530; 1–888–293–6498**

Single copies/back copies:

Paper or fiche	**202–512–1800**
Assistance with public single copies	**1–866–512–1800 (Toll-Free)**

FEDERAL AGENCIES

Subscriptions:

Paper or fiche	**202–741–6005**
Assistance with Federal agency subscriptions	**202–741–6005**

FEDERAL REGISTER WORKSHOP

THE FEDERAL REGISTER: WHAT IT IS AND HOW TO USE IT

FOR: Any person who uses the Federal Register and Code of Federal Regulations.

WHO: Sponsored by the Office of the Federal Register.

WHAT: Free public briefings (approximately 3 hours) to present:

1. The regulatory process, with a focus on the Federal Register system and the public's role in the development of regulations.

2. The relationship between the Federal Register and Code of Federal Regulations.

3. The important elements of typical Federal Register documents.

4. An introduction to the finding aids of the FR/CFR system.

WHY: To provide the public with access to information necessary to research Federal agency regulations which directly affect them. There will be no discussion of specific agency regulations.

WHEN: Tuesday, May 8, 2007
9:00 a.m.–Noon

WHERE: Office of the Federal Register
Conference Room, Suite 700
800 North Capitol Street, NW.
Washington, DC 20002

RESERVATIONS: (202) 741–6008

Printed on recycled paper.

Contents

Federal Register

Vol. 72, No. 77

Monday, April 23, 2007

Agriculture Department
See Forest Service

Alcohol and Tobacco Tax and Trade Bureau
NOTICES
Agency information collection activities; proposals, submissions, and approvals, 20176–20178

Army Department
NOTICES
Meetings; Sunshine Act, 20108–20109

Centers for Disease Control and Prevention
NOTICES
Agency information collection activities; proposals, submissions, and approvals, 20128–20131

Coast Guard
RULES
Drawbridge operations:
New York, 20050–20051
Ports and waterways safety; regulated navigation areas, safety zones, security zones, etc.:
Jamestown Island, VA, 20051–20055
Regattas and marine parades:
Blessing of the Pleasure Craft Fleet, 20050
Opening Day on San Francisco Bay, 20049
ULHRA Hydroplane Races, 20047–20049
PROPOSED RULES
Ports and waterways safety; regulated navigation areas, safety zones, security zones, etc.:
Columbia River, OR, 20087–20089
Kenosha Harbor, WI, 20089–20092

Commerce Department
See National Oceanic and Atmospheric Administration

Comptroller of the Currency
NOTICES
Reports and guidance documents; availability, etc.:
Accounting and capital standards differences among Federal banking agencies; report to congressional committees, 20178–20180

Defense Department
See Army Department
PROPOSED RULES
Federal Acquisition Regulation (FAR):
Contractor code of ethics and business conduct, 20092
Cost or pricing data; definition, 20092–20104
NOTICES
Meetings; Sunshine Act, 20108

Drug Enforcement Administration
RULES
Schedules of controlled substances:
N-phenethyl-4-piperidone; control as list I chemical due to use for illicit manufacture of fentanyl, 20039–20047

Education Department
NOTICES
Agency information collection activities; proposals, submissions, and approvals, 20109
Grants and cooperative agreements; availability, etc.:
Postsecondary education—
Teacher Quality Enhancement Program, 20109–20110

Employment and Training Administration
NOTICES
Adjustment assistance; applications, determinations, etc.:
ABN Amro, 20139
Alan White Co., 20139–20140
Hearth and Home Technologies, 20140
Hickory Hardware/Belwith International Ltd et al., 20140–20141
Huntington Foam Pittsburgh Corp., 20141
Jeld-Wen Door Systems, 20141–20142
L.A. Darling Co., 20142
Missbrenner Prints, Inc., 20142
Quaker Fabric Corp., 20142
Robert Bosch Corp., 20142

Energy Department
See Federal Energy Regulatory Commission
NOTICES
Meetings:
Environmental Management Site-Specific Advisory Board—
Nevada Test Site, 20110
Oak Ridge Reservation, TN, 20110–20111
High Energy Physics Advisory Panel, 20111

Executive Office of the President
See Presidential Documents
See Trade Representative, Office of United States

Federal Aviation Administration
RULES
Airworthiness directives:
Short Brothers, 20030–20034
Airworthiness standards:
Special conditions—
McDonnell Douglas Models DC-10-10, 10-15, 10-30, 10-30F, 10-40, and 10-40F airplanes, 20029–20030
PROPOSED RULES
Airworthiness directives:
Alpha Aviation Design Ltd., 20070–20072
CFM International, 20075–20078
Stemme GmbH & Co., 20072–20075
Area navigation routes, 20078–20080
NOTICES
Airport noise compatibility program:
Noise exposure maps—
Hartsfield-Jackson Atlanta International Airport, GA, 20159–20160
Environmental statements; availability, etc.:
Juneau International Airport, AK, 20160–20161
Environmental statements; notice of intent:
Pompano Beach Airpark, FL; property release request, 20161–20162
Meetings:
RTCA, Inc., 20162–20163

Federal Bureau of Investigation
NOTICES
Agency information collection activities; proposals, submissions, and approvals, 20137–20138

Federal Deposit Insurance Corporation
NOTICES
Reports and guidance documents; availability, etc.:
Accounting and capital standards differences among Federal banking agencies; report to congressional committees, 20178–20180

Federal Energy Regulatory Commission
NOTICES
Electric rate and corporate regulation combined filings, 20111–20113
Environmental statements; availability, etc.:
Sitka, AK, 20113
Hydroelectric applications, 20114–20115
Off-the record communications, 20115–20116

Federal Motor Carrier Safety Administration
NOTICES
Agency information collection activities; proposals, submissions, and approvals, 20163–20165
Motor carrier safety standards:
Commercial driver's license standards; exemption applications—
Volvo Trucks North America, Inc., 20166–20168

Federal Reserve System
NOTICES
Banks and bank holding companies:
Change in bank control, 20116
Formations, acquisitions, and mergers, 20116
Reports and guidance documents; availability, etc.:
Accounting and capital standards differences among Federal banking agencies; report to congressional committees, 20178–20180

Fish and Wildlife Service
PROPOSED RULES
Endangered and threatened species:
Foreign species; findings on resubmitted petitions; listing actions progress description, 20184–20210
NOTICES
Agency information collection activities; proposals, submissions, and approvals, 20131–20132
Comprehensive conservation plans; availability, etc.:
Cabeza Prieta National Wildlife Refuge, AZ, 20132–20133
Salt Plains National Wildlife Refuge, OK, 20133–20134
Endangered and threatened species:
Bee Creek Cave harvestman, etc.; 5-year review, 20134–20136

Food and Drug Administration
NOTICES
Meetings:
Antiviral Drugs Advisory Committee, 20131

Forest Service
NOTICES
Meetings:
Eastern Washington Cascades and Yakima Provincial Advisory Committees, 20105

General Services Administration
PROPOSED RULES
Federal Acquisition Regulation (FAR):
Contractor code of ethics and business conduct, 20092
Cost or pricing data; definition, 20092–20104

Health and Human Services Department
See Centers for Disease Control and Prevention
See Food and Drug Administration
NOTICES
Meetings:
National Vaccine Advisory Committee, 20117
National security:
Chemical, biological, radiological, and nuclear threats; public health emergency medical countermeasures enterprise implementation plan, 20117–20128

Homeland Security Department
See Coast Guard
PROPOSED RULES
Real ID Act of 2005:
Driver's licenses and identification cards; minimum standards accepted by Federal agencies
Public meeting, 20061
NOTICES
Organization, functions, and authority delegations:
U.S. Immigration and Customs Enforcement and U.S. Customs and Border Protection; agency name changes, 20131

Interior Department
See Fish and Wildlife Service
See Land Management Bureau
See National Park Service
See Reclamation Bureau

Internal Revenue Service
PROPOSED RULES
Estate and gift taxes:
Post-death events; section 2053 guidance, 20080–20087
NOTICES
Agency information collection activities; proposals, submissions, and approvals, 20180–20182

Justice Department
See Drug Enforcement Administration
See Federal Bureau of Investigation
See Parole Commission
NOTICES
Pollution control; consent judgments:
Barnhill, Jack and Chris, 20137

Labor Department
See Employment and Training Administration
NOTICES
Agency information collection activities; proposals, submissions, and approvals, 20138–20139

Land Management Bureau
NOTICES
Meetings:
Resource Advisory Councils—
Eastern Montana, 20136

Maritime Administration
NOTICES
Agency information collection activities; proposals, submissions, and approvals, 20168–20169

Coastwise trade laws; administrative waivers:
BEST BUDDIES, 20169
BUGGALOO, 20169–20170
DEEP SIX, 20170
FINE LINE, 20170–20171
JOSEPHINE, 20171
LADY ANGELINA, 20171–20172
MY REALITY, 20172
PHOENIX, 20172–20173
TINKER TOY, 20173

National Aeronautics and Space Administration
PROPOSED RULES
Federal Acquisition Regulation (FAR):
Contractor code of ethics and business conduct, 20092
Cost or pricing data; definition, 20092–20104

National Credit Union Administration
PROPOSED RULES
Credit unions:
Mergers; related compensation arrangements; disclosure requirement, 20067–20070
Organization and operations—
Books, records and minutes; member inspection rights standardization and clarification, 20061–20067

National Oceanic and Atmospheric Administration
RULES
Fishery conservation and management:
Alaska; fisheries of Exclusive Economic Zone—
Yellowfin sole, 20060
Northeastern United States fisheries—
Atlantic hagfish, 20036–20039
NOTICES
Committees; establishment, renewal, termination, etc.:
Gulf of the Farallones National Marine Sanctuary Advisory Council, 20105
Grants and cooperative agreements; availability, etc.:
2007 FY funds availability omnibus notice, 20105–20106
Meetings:
Caribbean Fishery Management Council, 20107
Pacific Fishery Management Council, 20107–20108

National Park Service
NOTICES
National Register of Historic Places; pending nominations, 20136–20137

National Science Foundation
NOTICES
Meetings:
Astronomy and Astrophysics Advisory Committee, 20142

Office of United States Trade Representative
See Trade Representative, Office of United States

Parole Commission
NOTICES
Meetings; Sunshine Act, 20138

Personnel Management Office
NOTICES
Excepted service; positions placed or revoked, 20146–20148

Pipeline and Hazardous Materials Safety Administration
RULES
Pipeline safety:
Gas transmission pipelines; internal corrosion reduction; design and construction standards, 20055–20060
NOTICES
Meetings:
Prevention Through People initiative; workshop, 20174–20175
Pipeline safety:
Advisory bulletins—
Pipeline integrity management program performance reports; senior executive signature and certification, 20175–20176

Postal Service
NOTICES
Meetings; Sunshine Act, 20149

Presidential Documents
EXECUTIVE ORDERS
Courts-Martial Manual, United States; amendments (EO 13430), 20211–20220

Railroad Retirement Board
NOTICES
Privacy Act; computer matching programs, 20149–20150

Reclamation Bureau
NOTICES
Meetings:
Yakima River Basin Conservation Advisory Group, 20137

Securities and Exchange Commission
NOTICES
Agency information collection activities; proposals, submissions, and approvals, 20150
Self-regulatory organizations; proposed rule changes:
National Association of Securities Dealers, Inc., 20150–20154

Social Security Administration
NOTICES
Agency information collection activities; proposals, submissions, and approvals, 20154–20158

State Department
NOTICES
Nonproliferation measures imposition:
China National Precision Machinery Import/Export Corp. et al., 20158–20159

Thrift Supervision Office
NOTICES
Reports and guidance documents; availability, etc.:
Accounting and capital standards differences among Federal banking agencies; report to congressional committees, 20178–20180

Trade Representative, Office of United States
NOTICES
World Trade Organization:
Dispute settlement panel proceedings—
China; intellectual property rights; measures affecting protection and enforcement, 20144–20146
China; publications and audiovisual products; measures affecting trading rights and distribution services, 20143–20144

Transportation Department
See Federal Aviation Administration
See Federal Motor Carrier Safety Administration
See Maritime Administration

See Pipeline and Hazardous Materials Safety Administration

RULES

Air carrier control:
Fitness review policies; citizenship issues, 20034–20036

Treasury Department

See Alcohol and Tobacco Tax and Trade Bureau
See Comptroller of the Currency
See Internal Revenue Service
See Thrift Supervision Office

NOTICES

Meetings:
Treasury Borrowing Advisory Committee, 20176

Separate Parts In This Issue

Part II

Interior Department, Fish and Wildlife Service, 20184–20210

Part III

Executive Office of the President, Presidential Documents, 20211–20220

Reader Aids

Consult the Reader Aids section at the end of this issue for phone numbers, online resources, finding aids, reminders, and notice of recently enacted public laws.

To subscribe to the Federal Register Table of Contents LISTSERV electronic mailing list, go to http://listserv.access.gpo.gov and select Online mailing list archives, FEDREGTOC-L, Join or leave the list (or change settings); then follow the instructions.

CFR PARTS AFFECTED IN THIS ISSUE

A cumulative list of the parts affected this month can be found in the Reader Aids section at the end of this issue.

3 CFR

Executive Orders:

12473 (See EO 13430) 20213
13430 20213

6 CFR

Proposed Rules:

37 20061

12 CFR

Proposed Rules:

701 20061
708b 20067

14 CFR

25 20029
39 20030
204 20034
399 20034

Proposed Rules:

39 (3 documents) 20070, 20072, 20075
71 20078

15 CFR

902 20036

21 CFR

1310 20039

26 CFR

Proposed Rules:

20 20080

33 CFR

100 (3 documents) 20047, 20049, 20050
117 20050
165 (2 documents) 20051, 20053

Proposed Rules:

165 (2 documents) 20087, 20089

48 CFR

Proposed Rules:

2 (2 documents) 20092
3 20092
4 20092
12 20092
14 20092
15 20092
16 20092
19 20092
27 20092
30 20092
31 20092
32 20092
42 20092
44 20092
49 20092
52 (2 documents) 20092

49 CFR

192 20055

50 CFR

648 20036
679 20060

Proposed Rules:

17 20184

Rules and Regulations

Federal Register
Vol. 72, No. 77
Monday, April 23, 2007

This section of the FEDERAL REGISTER contains regulatory documents having general applicability and legal effect, most of which are keyed to and codified in the Code of Federal Regulations, which is published under 50 titles pursuant to 44 U.S.C. 1510.

The Code of Federal Regulations is sold by the Superintendent of Documents. Prices of new books are listed in the first FEDERAL REGISTER issue of each week.

DEPARTMENT OF TRANSPORTATION

Federal Aviation Administration

14 CFR Part 25

[Docket No. NM376; Special Conditions No. 25–352–SC]

Special Conditions: McDonnell Douglas Models DC–10–10, 10–15, 10–30, 10–30F, 10–40, and 10–40F Airplanes; High-Intensity Radiated Fields (HIRF)

AGENCY: Federal Aviation Administration (FAA), DOT.

ACTION: Final special conditions; request for comments.

SUMMARY: The FAA issues these special conditions for McDonnell Douglas Models DC–10–10, 10–15, 10–30, 10–30F, 10–40, and 10–40F airplanes modified by Canard Aerospace Corporation. These modified airplanes will have novel or unusual design features when compared with the state of technology envisioned in the airworthiness standards for transport category airplanes. The modification consists of installing electronic flight and engine instrument systems. The applicable airworthiness regulations do not contain adequate or appropriate safety standards for protecting these systems from effects of high-intensity radiated fields (HIRF). These special conditions contain the additional safety standards that the Administrator considers necessary to establish a level of safety equivalent to that established by the existing airworthiness standards.

DATES: The effective date of these special conditions is April 16, 2007. We must receive your comments on or before May 23, 2007.

ADDRESSES: You may mail or deliver comments on these special conditions in duplicate to: Federal Aviation Administration, Transport Airplane Directorate, Attention: Rules Docket (ANM–113), Docket No. NM376, 1601 Lind Avenue SW., Renton, Washington 98057–3356. You must mark your comments Docket No. NM376.

FOR FURTHER INFORMATION CONTACT: Greg Dunn, FAA, Airplane and Flight Crew Interface Branch, ANM–111, Transport Airplane Directorate, Aircraft Certification Service, 1601 Lind Avenue SW, Renton, Washington 98057–3356; telephone (425) 227–2799; facsimile (425) 227–1320.

SUPPLEMENTARY INFORMATION:

Comments Invited

The FAA has determined that notice and opportunity for prior public comment for these special conditions is impracticable because these procedures would significantly delay certification and delivery of the affected aircraft. In addition, the substance of these special conditions has been subject to the public comment process in several prior instances with no substantive comments received. We therefore find that good cause exists for making these special conditions effective upon issuance. However, we invite interested persons to take part in this rulemaking by submitting written comments. The most helpful comments reference a specific portion of the special conditions, explain the reason for any recommended change, and include supporting data. We ask that you send us two copies of written comments.

We will file in the docket all comments we receive, as well as a report summarizing each substantive public contact with FAA personnel about these special conditions. You may inspect the docket before and after the comment closing date. If you wish to review the docket in person, go to the address in the **ADDRESSES** section of this preamble between 7:30 a.m. and 4 p.m., Monday through Friday, except Federal holidays.

We will consider all comments we receive on or before the closing date for comments. We will consider comments filed late if it is possible to do so without incurring expense or delay. We may change these special conditions based on the comments we receive.

If you want the FAA to acknowledge receipt of your comments on these special conditions, include with your comments a pre-addressed, stamped postcard on which the docket number appears. We will stamp the date on the postcard and mail it back to you.

Background

On October 24, 2006, Canard Aerospace Corporation, 250 South Fuller Street, Shakopee, Minnesota, 55379, applied for a supplemental type certificate (STC) to modify McDonnell Douglas Models DC–10–10, 10–15, 10–30, 10–30F, 10–40, and 10–40F airplanes. The McDonnell Douglas Model DC–10 airplanes are powered by three turbofan engines, with maximum takeoff weights of up to 590,000 pounds. These airplanes operate with a 2-pilot crew and can seat up to 380 passengers. The modification consists of installing electronic flight and engine instrument systems. These systems have a potential to be vulnerable to high-intensity radiated fields (HIRF) external to the airplane.

Type Certification Basis

Under provisions of 14 CFR 21.101, Canard Aerospace Corporation must show that the McDonnell Douglas Models DC–10–10, 10–15, 10–30, 10–30F, 10–40, and 10–40F airplanes, as changed, continue to meet the applicable provisions of the regulations incorporated by reference in Type Certificate No. A22WE or the applicable regulations in effect on the date of application for the change. The regulations incorporated by reference in the type certificate are commonly referred to as the ''original type certification basis.'' The specific regulations are 14 CFR part 25, as amended by Amendments 25–1 through 25–22. In addition, the certification basis includes certain special conditions and exemptions that are not relevant to these special conditions.

If the Administrator finds that the applicable airworthiness regulations (part 25, as amended) do not contain adequate or appropriate safety standards for the McDonnell Douglas Model DC–10 airplanes because of a novel or unusual design feature, special conditions are prescribed under the provisions of § 21.16.

In addition to the applicable airworthiness regulations and special conditions, the McDonnell Douglas Model DC–10 airplanes must comply with the fuel vent and exhaust emission requirements of 14 CFR part 34 and the noise certification requirements of 14 CFR part 36.

The FAA issues special conditions, as defined in § 11.19, under § 11.38, and they become part of the type certification basis under the provisions of § 21.101.

Novel or Unusual Design Features

As noted earlier, the McDonnell Douglas Model DC–10 airplanes modified by Canard Aerospace will incorporate the Astronautics Electronic Flight Information System (EFIS) that will perform critical functions. This system may be vulnerable to high-intensity radiated fields external to the airplane. Current airworthiness standards of part 25 do not contain adequate or appropriate safety standards for protecting this equipment from adverse effects of HIRF. So this system is considered to be a novel or unusual design feature.

Discussion

As previously stated, there is no specific regulation that addresses protection for electrical and electronic systems from HIRF. Increased power levels from radio frequency transmitters and the growing use of sensitive avionics/electronics and electrical systems to command and control airplanes have made it necessary to provide adequate protection.

To ensure that a level of safety is achieved equivalent to that intended by the regulations incorporated by reference, special conditions are needed for the McDonnell Douglas Model DC–10 airplanes modified by Canard Aerospace Corporation. These special conditions require that new avionics/electronics and electrical systems that perform critical functions be designed and installed to preclude component damage and interruption of function because of HIRF.

High-Intensity Radiated Fields (HIRF)

High-power radio frequency transmitters for radio, radar, television, and satellite communications can adversely affect operation of airplane electric and electronic systems. Therefore, the immunity of critical avionics/electronics and electrical systems to HIRF must be established.

Based on surveys and an analysis of existing HIRF emitters, an adequate level of protection exists when airplane system immunity is demonstrated when exposed to the HIRF environments in either paragraph 1 OR 2 below:

1. A minimum environment of 100 volts rms (root-mean-square) per meter electric field strength from 10 KHz to 18 GHz.

a. System elements and their associated wiring harnesses must be exposed to the environment without benefit of airframe shielding.

b. Demonstration of this level of protection is established through system tests and analysis.

2. An environment external to the airframe of the field strengths shown in the table below for the frequency ranges indicated. Immunity to both peak and average field strength components from the table must be demonstrated.

Frequency	Field strength (volts per meter)	
	Peak	Average
10 kHz–100 kHz	50	50
100 kHz–500 kHz	50	50
500 kHz–2 MHz	50	50
2 MHz–30 MHz	100	100
30 MHz–70 MHz	50	50
70 MHz–100 MHz	50	50
100 MHz–200 MHz	100	100
200 MHz–400 MHz	100	100
400 MHz–700 MHz	700	50
700 MHz–1 GHz	700	100
1 GHz–2 GHz	2000	200
2 GHz–4 GHz	3000	200
4 GHz–6 GHz	3000	200
6 GHz–8 GHz	1000	200
8 GHz–12 GHz	3000	300
12 GHz–18 GHz	2000	200
18 GHz–40 GHz	600	200

The field strengths are expressed in terms of peak of the root-mean-square (rms) over the complete modulation period.

The environment levels identified above are the result of an FAA review of existing studies on the subject of HIRF and of the work of the Electromagnetic Effects Harmonization Working Group of the Aviation Rulemaking Advisory Committee.

Applicability

These special conditions are applicable to McDonnell Douglas Model DC–10 airplanes modified by Canard Aerospace Corporation. Should Canard Aerospace apply at a later date for a supplemental type certificate to modify any other model included on Type Certificate No. A22WE to incorporate the same or similar novel or unusual design feature, these special conditions would apply to that model as well under provisions of § 21.101.

Conclusion

This action affects only certain novel or unusual design features on McDonnell Douglas Model DC–10 airplanes modified by Canard Aerospace Corporation. It is not a rule of general applicability and affects only the applicant who applied to the FAA for approval of these features on the airplane.

List of Subjects in 14 CFR Part 25

Aircraft, Aviation safety, Reporting and recordkeeping requirements.

■ The authority citation for these special conditions is as follows:

Authority: 49 U.S.C. 106(g), 40113, 44701, 44702, 44704.

The Special Conditions

■ Therefore, under the authority delegated to me by the Administrator, the following special conditions are issued as part of the supplemental type certification basis for the McDonnell Douglas Models DC–10–10, 10–15, 10–30, 10–30F, 10–40, and 10–40F airplanes modified by Canard Aerospace Corporation.

1. *Protection from Unwanted Effects of High-Intensity Radiated Fields (HIRF).* Each electrical and electronic system that performs critical functions must be designed and installed to ensure that the operation and operational capability of these systems to perform critical functions are not adversely affected when the airplane is exposed to high-intensity radiated fields.

2. For the purpose of these special conditions, the following definition applies:

Critical Functions: Functions whose failure would contribute to or cause a failure condition that would prevent continued safe flight and landing of the airplane.

Issued in Renton, Washington, on April 16, 2007.

Ali Bahrami,

Manager, Transport Airplane Directorate, Aircraft Certification Service.

[FR Doc. E7–7699 Filed 4–20–07; 8:45 am]

BILLING CODE 4910–13–P

DEPARTMENT OF TRANSPORTATION

Federal Aviation Administration

14 CFR Part 39

[Docket No. FAA–2007–27866; Directorate Identifier 2007–NM–055–AD; Amendment 39–15027; AD 2007–08–09]

RIN 2120–AA64

Airworthiness Directives; Short Brothers Model SD3–60 SHERPA, SD3–SHERPA, SD3–30, and SD3–60 Airplanes

AGENCY: Federal Aviation Administration (FAA), Department of Transportation (DOT).

ACTION: Final rule; request for comments.

SUMMARY: We are adopting a new airworthiness directive (AD) for the products listed above. This AD results from mandatory continuing airworthiness information (MCAI) originated by an aviation authority of another country to identify and correct an unsafe condition on an aviation product. The MCAI describes the unsafe condition as:

An analysis of the cable operated control system installed on the SD3 aircraft types that use MS 21260 type end fittings has identified a number of potentially unsafe conditions due to a combination of failures * * *.

The failure of certain control cables could result in the loss of certain critical systems. For example, the loss of the low pressure (LP) fuel control cable in combination with a single failure of a fuel condition control cable on the same engine can cause the loss of the capability to shut down the engine in the event of an engine fire. This AD requires actions that are intended to address the unsafe condition described in the MCAI.

DATES: This AD becomes effective May 8, 2007.

The Director of the Federal Register approved the incorporation by reference of certain publications listed in the AD as of May 8, 2007.

We must receive comments on this AD by May 23, 2007.

ADDRESSES: You may send comments by any of the following methods:

- *DOT Docket Web site:* Go to *http://dms.dot.gov* and follow the instructions for sending your comments electronically.
- *Fax:* (202) 493–2251.
- *Mail:* Docket Management Facility, U.S. Department of Transportation, 400 Seventh Street, SW., Nassif Building, Room PL–401, Washington, DC 20590–0001.
- *Hand Delivery:* Room PL–401 on the plaza level of the Nassif Building, 400 Seventh Street, SW., Washington, DC, between 9 a.m. and 5 p.m., Monday through Friday, except Federal holidays.
- *Federal eRulemaking Portal: http://www.regulations.gov*. Follow the instructions for submitting comments.

Examining the AD Docket

You may examine the AD docket on the Internet at *http://dms.dot.gov*; or in person at the Docket Management Facility between 9 a.m. and 5 p.m., Monday through Friday, except Federal holidays. The AD docket contains this AD, the regulatory evaluation, any comments received, and other information. The street address for the Docket Office (telephone (800) 647–5227) is in the **ADDRESSES** section. Comments will be available in the AD docket shortly after receipt.

FOR FURTHER INFORMATION CONTACT: Todd Thompson, Aerospace Engineer, International Branch, ANM–116, FAA, Transport Airplane Directorate, 1601 Lind Avenue, SW., Renton, Washington 98057–3356; telephone (425) 227–1175; fax (425) 227–1149.

SUPPLEMENTARY INFORMATION:

Streamlined Issuance of AD

The FAA is implementing a new process for streamlining the issuance of ADs related to MCAI. This streamlined process will allow us to adopt MCAI safety requirements in a more efficient manner and will reduce safety risks to the public. This process continues to follow all FAA AD issuance processes to meet legal, economic, Administrative Procedure Act, and **Federal Register** requirements. We also continue to meet our technical decision-making responsibilities to identify and correct unsafe conditions on U.S.-certificated products.

This AD references the MCAI and related service information that we considered in forming the engineering basis to correct the unsafe condition. The AD contains text copied from the MCAI and for this reason might not follow our plain language principles.

Discussion

The European Aviation Safety Agency (EASA), which is the technical agent for the Member States of the European Community, has issued EASA Emergency Airworthiness Directive 2007–0039-E, dated February 16, 2007 (referred to after this as ''the MCAI''), to correct an unsafe condition for the specified products. The MCAI states:

Following the identification of a failed propeller RPM (revolutions per minute) cable end fitting and an LP (low pressure) fuel lever cable end fitting on an SD3 aircraft, several subsequent occurrences of control cable end fittings (type MS21260) with signs of pitting corrosion or cracking have been reported to Bombardier Shorts. All reported instances being identified during ground maintenance inspections on the SD3 fleet. Bombardier Shorts have performed examinations on the failed cable end fittings and established the root cause of failure as stress corrosion cracking of the SAE–AISI 303 stainless steel material they are manufactured from, initiated by pitting corrosion on the surface. The root cause of the stress corrosion is sustained tensile stress in a corrosive (warm, humid and salty) atmosphere.

An analysis of the cable operated control systems installed on the SD3 aircraft types that use MS 21260 type end fittings has identified a number of potentially unsafe conditions due to a combination of failures that may result from this common mode cause.

The failure of certain control cables could result in the loss of certain critical systems. For example, the loss of the LP fuel control cable in combination with a single failure of a fuel condition control cable on the same engine can cause the loss of the capability to shut down the engine in the event of an engine fire. You may obtain further information by examining the MCAI in the AD docket.

Relevant Service Information

Shorts has issued the following service bulletins. The actions described in this service information are intended to correct the unsafe condition identified in the MCAI.

- Shorts Alert Service Bulletin SD3 Sherpa–76–A02, Revision 1, dated January 24, 2007.
- Shorts Alert Service Bulletin SD330–76–A09, Revision 1, dated January 24, 2007.
- Shorts Alert Service Bulletin SD360 Sherpa–76–A03, Revision 1, dated January 24, 2007.
- Shorts Alert Service Bulletin SD360–76–A12, Revision 1, dated January 24, 2007.

FAA's Determination and Requirements of This AD

This product has been approved by the aviation authority of another country, and is approved for operation in the United States. Pursuant to our bilateral agreement with the State of Design Authority, we have been notified of the unsafe condition described in the MCAI and service information referenced above. We are issuing this AD because we evaluated all pertinent information and determined the unsafe condition exists and is likely to exist or develop on other products of the same type design.

Differences Between the AD and the MCAI or Service Information

We have reviewed the MCAI and related service information and, in general, agree with their substance. But we might have found it necessary to use different words from those in the MCAI to ensure the AD is clear for U.S. operators and is enforceable. In making these changes, we do not intend to differ substantively from the information provided in the MCAI and related service information.

We might also have required different actions in this AD from those in the MCAI in order to follow FAA policies. Any such differences are highlighted in a NOTE within the AD.

FAA's Determination of the Effective Date

An unsafe condition exists that requires the immediate adoption of this AD. The FAA has found that the risk to the flying public justifies waiving notice and comment prior to adoption of this rule because of the number of control cable assemblies that were deemed not to be airworthy when evaluated against specific inspection criteria. Therefore, we determined that notice and opportunity for public comment before issuing this AD are impracticable and that good cause exists for making this amendment effective in fewer than 30 days.

Comments Invited

This AD is a final rule that involves requirements affecting flight safety, and we did not precede it by notice and opportunity for public comment. We invite you to send any written relevant data, views, or arguments about this AD. Send your comments to an address listed under the **ADDRESSES** section. Include ''Docket No. FAA–2007–27866; Directorate Identifier 2007–NM–055–AD'' at the beginning of your comments. We specifically invite comments on the overall regulatory, economic, environmental, and energy aspects of this AD. We will consider all comments received by the closing date and may amend this AD because of those comments.

We will post all comments we receive, without change, to *http://dms.dot.gov*, including any personal information you provide. We will also post a report summarizing each substantive verbal contact we receive about this AD.

Authority for This Rulemaking

Title 49 of the United States Code specifies the FAA's authority to issue rules on aviation safety. Subtitle I, section 106, describes the authority of the FAA Administrator. ''Subtitle VII: Aviation Programs,'' describes in more detail the scope of the Agency's authority.

We are issuing this rulemaking under the authority described in ''Subtitle VII, Part A, Subpart III, Section 44701: General requirements.'' Under that section, Congress charges the FAA with promoting safe flight of civil aircraft in air commerce by prescribing regulations for practices, methods, and procedures the Administrator finds necessary for safety in air commerce. This regulation is within the scope of that authority because it addresses an unsafe condition that is likely to exist or develop on products identified in this rulemaking action.

Regulatory Findings

We determined that this AD will not have federalism implications under Executive Order 13132. This AD will not have a substantial direct effect on the States, on the relationship between the national government and the States, or on the distribution of power and responsibilities among the various levels of government.

For the reasons discussed above, I certify this AD:

1. Is not a ''significant regulatory action'' under Executive Order 12866;

2. Is not a ''significant rule'' under the DOT Regulatory Policies and Procedures (44 FR 11034, February 26, 1979); and

3. Will not have a significant economic impact, positive or negative, on a substantial number of small entities under the criteria of the Regulatory Flexibility Act.

We prepared a regulatory evaluation of the estimated costs to comply with this AD and placed it in the AD docket.

List of Subjects in 14 CFR Part 39

Air transportation, Aircraft, Aviation safety, Incorporation by reference, Safety.

Adoption of the Amendment

■ Accordingly, under the authority delegated to me by the Administrator, the FAA amends 14 CFR part 39 as follows:

PART 39—AIRWORTHINESS DIRECTIVES

■ 1. The authority citation for part 39 continues to read as follows:

Authority: 49 U.S.C. 106(g), 40113, 44701.

§ 39.13 [Amended]

■ 2. The FAA amends § 39.13 by adding the following new AD:

2007–08–09 Short Brothers PLC: Amendment 39–15027. Docket No. FAA–2007–27866; Directorate Identifier 2007–NM–055–AD.

Effective Date

(a) This airworthiness directive (AD) becomes effective May 8, 2007.

Affected ADs

(b) None.

Applicability

(c) This AD applies to all Shorts Model SD3–60 SHERPA, SD3–SHERPA, SD3–30, and SD3–60 airplanes, certificated in any category.

Subject

(d) Engine controls.

Reason

(e) The mandatory continued airworthiness information (MCAI) states:

Following the identification of a failed propeller RPM (revolutions per minute) cable end fitting and an LP (low pressure) fuel lever cable end fitting on an SD3 aircraft, several subsequent occurrences of control cable end fittings (type MS21260) with signs of pitting corrosion or cracking have been reported to Bombardier Shorts. All reported instances being identified during ground maintenance inspections on the SD3 fleet. Bombardier Shorts have performed examinations on the failed cable end fittings and established the root cause of failure as stress corrosion cracking of the SAE–AISI 303 stainless steel material they are manufactured from, initiated by pitting corrosion on the surface. The root cause of the stress corrosion is sustained tensile stress in a corrosive (warm, humid and salty) atmosphere.

An analysis of the cable operated control systems installed on the SD3 aircraft types that use MS 21260 type end fittings has identified a number of potentially unsafe conditions due to a combination of failures that may result from this common mode cause.

The failure of certain control cables could result in the loss of certain critical systems. For example, the loss of the low pressure (LP) fuel control cable in combination with a single failure of a fuel condition control cable on the same engine can cause the loss of the capability to shut down the engine in the event of an engine fire.

Actions and Compliance

(f) Unless already done, do the following actions.

(1) Within 30 days after the effective date of this AD, inspect the affected cable assembly end fittings in accordance with the applicable service bulletin specified in Table 1 of this AD.

(2) If no pitting/corrosion or cracking is found, within 12 months after the inspection required by paragraph (f)(1) of this AD, and thereafter at intervals not to exceed 12 months, repeat the inspection of the cable assembly end fittings in accordance with the applicable service bulletin specified in Table 1 of this AD. Replacing the cable assembly with a new cable assembly in accordance with the applicable service bulletin terminates the repetitive inspection intervals of this paragraph for the replaced cable assembly.

(3) When pitting/corrosion or cracking is found during any inspection required by this AD, before further flight, replace the affected cable assembly with a new cable assembly in accordance with the applicable service bulletin specified in Table 1 of this AD.

(4) After any replacement done in accordance with paragraph (f)(2) or (f)(3) of this AD, repeat the inspection required by paragraph (f)(1) of this AD for the replaced

cable assembly at intervals not to exceed 180 months.

(5) Do the actions in paragraphs (f)(1), (f)(2), (f)(3), and (f)(4) of this AD in accordance with the Accomplishment Instructions of the applicable Shorts Alert Service Bulletin listed in Table 1 of this AD.

TABLE 1.—SERVICE BULLETINS FOR APPLICABLE ACTIONS

Shorts Alert Service Bulletin	Revision level	Date
SD3 Sherpa–76–A02	1	January 24, 2007.
SD330–76–A09	1	January 24, 2007.
SD360 Sherpa–76–A03	1	January 24, 2007.
SD360–76–A12	1	January 24, 2007.

FAA AD Differences

Note: This AD differs from the MCAI and/or service information as follows: No differences.

Other FAA AD Provisions

(g) The following provisions also apply to this AD:

(1) *Alternative Methods of Compliance (AMOCs):* The Manager, International Branch, ANM–116, FAA, has the authority to approve AMOCs for this AD, if requested using the procedures found in 14 CFR 39.19. Send information to ATTN: Todd Thompson, Aerospace Engineer, International Branch, ANM–116, FAA, Transport Airplane Directorate, 1601 Lind Avenue, SW., Renton, Washington 98057–3356; telephone (425) 227–1175; fax (425) 227–1149. Before using any AMOC approved in accordance with § 39.19 on any airplane to which the AMOC applies, notify the appropriate principal inspector in the FAA Flight Standards Certificate Holding District Office.

(2) *Airworthy Product:* For any requirement in this AD to obtain corrective actions from a manufacturer or other source, use these actions if they are FAA-approved. Corrective actions are considered FAA-approved if they are approved by the State of Design Authority (or their delegated agent). You are required to assure the product is airworthy before it is returned to service.

(3) *Reporting Requirements:* For any reporting requirement in this AD, under the provisions of the Paperwork Reduction Act, the Office of Management and Budget (OMB) has approved the information collection requirements and has assigned OMB Control Number 2120–0056.

Related Information

(h) Refer to MCAI European Aviation Safety Agency (EASA) Emergency Airworthiness Directive 2007–0039–E, dated February 16, 2007, and the Shorts service information listed in Table 2 of this AD.

TABLE 2.—RELATED INFORMATION

Shorts Alert Service Bulletin	Revision level	Date
SD3 Sherpa–76–A02	1	January 24, 2007.
SD330–76–A09	1	January 24, 2007.
SD360 Sherpa–76–A03	1	January 24, 2007.
SD360–76–A12	1	January 24, 2007.

Material Incorporated by Reference

(i) You must use the service information specified in Table 3 of this AD to do the actions required by this AD, unless the AD specifies otherwise.

TABLE 3.—MATERIAL INCORPORATED BY REFERENCE

Shorts Alert Service Bulletin	Page No.	Revision level	Date
SD3 Sherpa–76–A02	1, 6	1	January 24, 2007.
	2–5, 7–16	Original	January 10, 2007.
SD330–76–A09	1, 6	1	January 24, 2007.
	2–5, 7–19	Original	January 10, 2007.
SD360 Sherpa–76–A03	1, 6	1	January 24, 2007.
	2–5, 7–16	Original	January 10, 2007.
SD360–76–A12	1, 6	1	January 24, 2007.
	2–5, 7–16	Original	January 10, 2007.

(1) The Director of the Federal Register approved the incorporation by reference of this service information under 5 U.S.C. 552(a) and 1 CFR part 51.

(2) For service information identified in this AD, contact Short Brothers, Airworthiness & Engineering Quality, P.O. Box 241, Airport Road, Belfast BT3 9DZ, Northern Ireland.

(3) You may review copies at the FAA, Transport Airplane Directorate, 1601 Lind Avenue, SW., Renton, Washington; or at the National Archives and Records Administration (NARA). For information on the availability of this material at NARA, call (202) 741–6030, or go to: *http://www.archives.gov/federal-register/cfr/ibr-locations.html.*

Issued in Renton, Washington, on April 6, 2007.

Ali Bahrami,

Manager, Transport Airplane Directorate, Aircraft Certification Service.

[FR Doc. E7–7118 Filed 4–20–07; 8:45 am]

BILLING CODE 4910–13–P

DEPARTMENT OF TRANSPORTATION

Office of the Secretary

14 CFR Parts 204 and 399

[Docket No. OST–2003–15759]

RIN 2105–AD25

Review of Data Filed by Certificated or Commuter Air Carriers To Support Continuing Fitness Determinations Involving Citizenship Issues

AGENCY: Office of the Secretary, DOT.

ACTION: Final rule.

SUMMARY: The Department is adopting its proposed editorial changes to its rules on Data to Support Fitness Determinations, 14 CFR part 204, and has determined to maintain its existing procedures for conducting reviews of the continuing fitness of air carriers. These actions complete this rulemaking. The Department had earlier withdrawn a proposal made in this rulemaking to modify the Department's standards for determining whether carriers remain under the actual control of U.S. citizens.

EFFECTIVE DATE: The rule is effective May 23, 2007.

FOR FURTHER INFORMATION CONTACT: William M. Bertram, Chief, Air Carrier Fitness Division (X–56), Office of Aviation Analysis, U.S. Department of Transportation, 400 7th Street, SW., Washington, DC 20590; (202) 366–9721.

SUPPLEMENTARY INFORMATION:

Introduction

By statute, only citizens of the United States may obtain and hold certificate authority under 49 U.S.C. 41102 or 41103 authorizing them to provide air transportation within the United States or operate as a U.S. air carrier on international routes. The statutory citizenship requirements require that at least 75 percent of the voting interest of a U.S. air carrier be owned and controlled by U.S. citizens, that the president and two-thirds of the board of directors and managing officers be U.S. citizens, and that U.S. carriers be subject to the actual control of U.S. citizens. 49 U.S.C. 40102(a)(15). In this proceeding, we invited public comment on three matters related to our consideration of citizenship issues: (i) We proposed technical changes to our rules governing citizenship and fitness determinations, 14 CFR part 204; (ii) we considered whether we should modify our procedures for reviewing whether a carrier is complying with the continuing citizenship requirement; and (iii) we proposed to modify the standards used for determining whether a carrier is actually controlled by U.S. citizens. We have withdrawn the proposal to modify our standards on actual control. 71 FR 71106 (December 8, 2006). In this final rule, we are resolving the other two matters. We are adopting the proposed technical changes to part 204, and we explain why we have decided to continue following our procedural practices in continuing fitness cases.

Background

We examine carrier citizenship primarily in two situations. First, when a firm applies for authority to operate as a U.S. carrier, we conduct an initial fitness review, which necessarily includes a review of the carrier's citizenship. We conduct initial fitness reviews through docketed proceedings, where a public record of the pleadings is maintained; we publish all Department decisions in the case; and we give interested persons an opportunity to comment on the application. Second, we conduct a continuing fitness review if an existing carrier undergoes a substantial change in ownership, operations, or management. We usually conduct continuing fitness investigations without a public proceeding and therefore do not create a docket containing record material, publish a final decision, or provide an opportunity for public comment. In some continuing fitness cases, we may decide to use more formal public procedures. See 71 FR 26426–26427.

Rulemaking Notices

We issued a Notice of Proposed Rulemaking (NPRM) that proposed to update our interpretation of actual control and to continue using our informal procedures in most continuing fitness reviews. 70 FR 67389 (November 7, 2005). We also proposed changes to part 204 to correct minor typographical errors, update statutory references, and clarify some language. 70 FR 67395. We thereafter issued a Supplemental Notice of Proposed Rulemaking (SNPRM) to address the comments made on the NPRM, and to propose additional refinements to our proposed modification of our actual control standard. 71 FR 26425 (May 5, 2006). We again proposed to continue using our informal procedures in most continuing fitness reviews.

In the NPRM and SNPRM, we stated that we had tentatively determined to continue using the same informal procedures for continuing fitness reviews that we have always used. 71 FR 26436; 70 FR 67392. We believed that significant potential harm could result if we made all substantial foreign investment cases subject to public notice and comment, and that using public proceedings in all significant cases appeared to be unnecessary for the protection of interested persons. We stated that we would have the option of beginning a public proceeding in any case if we found that doing so would be useful. 71 FR 26436.

Comments

The comments on the NPRM and SNPRM focused on our proposed change to our standard for defining when U.S. citizens had actual control of a U.S. carrier. None of the commenters opposed our proposed changes to part 204. While several commenters discussed the procedural issues in their responses to our NPRM, only Continental commented in any detail on our SNPRM's proposed decision to continue using informal procedures in most continuing fitness reviews. Continental asserted that the informal procedures enable us to resolve citizenship matters after negotiating only with the carrier and its foreign investors, not with other persons affected by the transaction. Continental Comments at 9.

Decision on Procedures

We have determined to continue following our existing procedures for continuing fitness reviews for the reasons stated in our earlier notices. We can, of course, always choose to use public procedures in any continuing fitness review, and interested persons have the right to ask us to do so. *See* 71 FR 26436.

We think that our procedures give the public a significant amount of information on our decisions in fitness cases, notwithstanding Continental's assertion to the contrary, although we will be considering whether they can be improved. First, we decide all initial fitness cases in public orders that explain the basis for our decision on all significant issues. If such a case presents a significant citizenship issue, the order deciding the case will discuss why we find that the applicant is (or is not) actually controlled by U.S. citizens. Second, in continuing fitness reviews where we begin public proceedings, any final decision on the merits would be a public order that would explain the basis for that decision.

When we use the more informal procedures in continuing fitness reviews, we do not publish our final decision explaining our analysis of any citizenship issues. However, we will be following the same procedures in such cases that we use in other situations where we believe that a carrier or other person may have violated our regulations or statute. Continental has presented no reason why we should treat continuing fitness reviews differently from all other enforcement investigations, which are typically done informally unless the enforcement office determines that there is a need for a formal enforcement proceeding.

Nevertheless, we think it may be helpful if carriers, potential investors, and the public generally had additional information on our analyses in citizenship cases. We will consider developing procedures that would give the public more information on our decisions in citizenship matters, and we are actively exploring whether there are practicable means of doing so in appropriate cases.

Airports Council International—Europe (''ACI''), bmi, and Virgin Atlantic Airways would like us to make commitments on the timetable for the completion of our review of citizenship issues in initial fitness cases. bmi Comments at 2; Virgin Atlantic Comments at 4; ACI Comments at 2. We appreciate the interest of a carrier and its investors, officers, and employees in obtaining a prompt decision from us on any application for operating authority. We intend to complete our decisions in such cases as promptly as possible and with the aim of imposing the minimum administrative burden consistent with ensuring that the standards we have set forth are met. However, we do not proceed on an initial application for operating authority until the record is complete, and the applicant has the responsibility of providing us with a complete record. 14 CFR 302.209. Citizenship, moreover, is but one of several matters that must be addressed in determining whether a carrier is fit, for we must also review the applicant's financial fitness, managerial competence, and compliance disposition. In initial fitness cases deadlines for the completion of our decision-making process are set by 49 U.S.C. 41108 and 14 CFR part 302, subpart B.

Part 204 Modifications

Part 204 of our rules governs the data needed for fitness determinations. We proposed minor changes to that part to correct typographical errors, clarify some language, and update references to the applicable statutory language. 71 FR 26436. In section 204.2, we are amending the definition of ''citizen of the United States'' to mirror the language that is now contained in 49 U.S.C. 40102(a)(15). We believe that the regulations should mirror the text of the statute as it is currently written. Finally, we are making minor changes to section 204.5 to clarify language in paragraph (a)(2); deleting a typographical error in paragraph (b); revising the address in paragraph (c); and adding a new paragraph (d) that would replace the last sentence of paragraph (c). These amendments to part 204 should make the regulations easier to understand for carriers consulting the sections. Because we have withdrawn the proposed policy statement on our standards for determining actual control, we will not adopt the proposal to include a cross-reference to that policy statement in part 204.

No commenter opposed these changes, and we find that they should be made for the reasons given in the SNPRM.

Rulemaking Analyses and Notices

Executive Order 12866 (Regulatory Planning and Review) and DOT Regulatory Policies and Procedures

Executive Order 12866, Regulatory Planning and Review, directs the Department to assess both the costs and the benefits of a regulatory change. This rulemaking was initially considered significant under DOT Policies and Procedures and E.O. 12866 because of significant public interest in our proposal to adopt a policy statement modifying our standards for determining actual control. The NPRM and the SNPRM were reviewed by the Office of Management and Budget under Executive Order 12866. In the NPRM and SNPRM, we tentatively concluded that the benefits of our proposed rule would outweigh its costs, which would be minimal because the rule would not impose any new costs on the affected certificated and commuter air carriers. 70 FR 67389, 67395; 71 FR 26440.

Commenters had an opportunity to submit comments on our tentative analysis. None of the commenters submitted comments on our tentative regulatory evaluation.

We have withdrawn the proposed policy statement, 71 FR 71106 (December 8, 2006), and there is no significant public interest in the technical changes that we are adopting for part 204, which will not make any substantive changes. In this proceeding we are not changing our procedures for resolving continuing fitness issues.

This final rule is not considered significant under Executive Order 12866 and was not reviewed by the Office of Management and Budget. This rule would result in little, if any cost.

Regulatory Flexibility Act

The Regulatory Flexibility Act (5 U.S.C. 601–612), as amended by the Small Business Regulatory Enforcement Fairness Act of 1996, requires federal agencies, as part of each rule, to consider regulatory alternatives that minimize the impact on small entities while achieving the objectives of the rulemaking. This rule makes only editorial amendments to part 204 that do not change its substance. We certify that this action will not have a significant economic impact on a substantial number of small entities.

Trade Impact Assessments

The Trade Agreement Act of 1979 prohibits federal agencies from establishing any standards or engaging in related activities that create unnecessary obstacles to the foreign commerce of the United States. Legitimate domestic objectives, such as safety, are not considered unnecessary obstacles. The statute also requires consideration of international standards and, where appropriate, that U.S. standards be compatible. The Department has assessed the potential effect of this rule and has determined that it will have no effect on any trade-sensitive activity.

International Compatibility

In keeping with U.S. obligations under the Convention on International Civil Aviation, it is the Department's policy to comply with International Civil Aviation Organization (ICAO) Standards and Recommended Practices to the maximum extent practicable. The Department has determined that there are no ICAO Standards and

Recommended Practices that correspond to these regulations.

Unfunded Mandates Reform Act of 1995

The Unfunded Mandates Reform Act of 1955 (the Act) is intended, among other things, to curb the practice of imposing unfunded Federal mandates on State, local, and tribal governments. Title II of the Act requires each Federal agency to prepare a written statement assessing the effects of any Federal mandate in a proposed or final agency rule that may result in an expenditure of $100 million or more (adjusted annually for inflation) in any one year by State, local, and tribal governments, in the aggregate, or by the private sector; such a mandate is deemed to be a ''significant regulatory action.'' This rule does not contain such a mandate. The requirements of Title II of the Act, therefore, do not apply.

Executive Order 13132, Federalism

This action has been analyzed in accordance with the principles and criteria contained in Executive Order 13132, dated August 4, 1999 (64 FR 43255). This rule does not have a substantial direct effect on, or significant federalism implications for the States, nor would it limit the policymaking discretion of the States.

This rule would not directly preempt any State law or regulation, nor impose burdens on the States. This action would not have a significant effect on the States' ability to execute traditional State governmental functions. The agency has, therefore, determined that this proposal does not have sufficient federalism implications to warrant either the preparation of a federalism summary impact statement or require consultations with State and local governments.

Paperwork Reduction Act

The Paperwork Reduction Act of 1995 (PRA) (44 U.S.C. 3501 et seq.) requires Federal agencies to obtain approval from the Office of Management and Budget (OMB) for each collection of information they conduct, sponsor, or require through regulation. The agency has determined that the rule would not impose any additional requirements and does not change the paperwork collection that currently exists.

List of Subjects

14 CFR Part 204

Air carriers, Reporting and recordkeeping requirements.

14 CFR Part 399

Administration practice and procedure, Air carriers, Consumer protection.

■ For the reasons stated in the preamble, the Department amends 14 CFR part 204 as set forth below:

PART 204—DATA TO SUPPORT FITNESS DETERMINATIONS

■ 1. The authority citation for part 204 continues to read as follows:

Authority: 49 U.S.C. Chapters 401, 411, 417.

■ 2. Revise § 204.1 to read as follows:

§ 204.1 Purpose.

This part sets forth the fitness data that must be submitted by applicants for certificate authority, by applicants for authority to provide service as a commuter air carrier to an eligible place, by carriers proposing to provide essential air transportation, and by certificated air carriers and commuter air carriers proposing a substantial change in operations, ownership, or management. This part also contains the procedures and filing requirements applicable to carriers that hold dormant authority.

■ 3. Revise § 204.2(c)(3) to read as follows:

§ 204.2 Definitions.

* * * * *

(c) *Citizen of the United States* means:

* * * * *

(3) A corporation or association organized under the laws of the United States or a State, the District of Columbia, or a territory or possession of the United States, of which the president and at least two-thirds of the board of directors and other managing officers are citizens of the United States, which is under the actual control of citizens of the United States, and in which at least 75 percent of the voting interest is owned or controlled by persons that are citizens of the United States.

* * * * *

■ 4. Amend § 204.5 as follows:

■ A. Revise paragraph (a)(2) to read as set forth below;

■ B. Amend paragraph (b) to remove the ''s'' after ''Carrier'' in the third sentence in the reference to ''Air Carrier Fitness Division'';

■ C. Revise paragraph (c) to read as set forth below; and

■ D. Add a new paragraph (d) to read as set forth below.

The revisions read as follows:

§ 204.5 Certificated and commuter air carriers undergoing or proposing to undergo a substantial change in operations, ownership, or management.

(a) * * *

(2) The change substantially alters the factors upon which its latest fitness finding is based, even if no new authority is required.

* * * * *

(c) Information filings pursuant to this section made to support an application for new or amended certificate authority shall be filed with the application and addressed to Docket Operations, M–30, U.S. Department of Transportation, Washington, DC 20590, or by electronic submission at [*http://dms.dot.gov*].

(d) Information filed in support of a certificated or commuter air carrier's continuing fitness to operate under its existing authority in light of substantial changes in its operations, management, or ownership, including changes that may affect the air carrier's citizenship, shall be addressed to the Chief, Air Carrier Fitness Division, Office of the Secretary, U.S. Department of Transportation, Washington, DC 20590.

Issued in Washington, DC, on April 16, 2007.

Andrew B. Steinberg,

Assistant Secretary for Aviation and International Affairs.

[FR Doc. E7–7605 Filed 4–20–07; 8:45 am]

BILLING CODE 4910–9X–P

DEPARTMENT OF COMMERCE

National Oceanic and Atmospheric Administration

15 CFR Part 902

50 CFR Part 648

RIN 0648–AU80

[Docket No. 061016268–7080–02; I.D. 100506E]

Fisheries of the Northeastern United States; Regulatory Amendment to Modify Recordkeeping and Reporting and Observer Requirements

AGENCY: National Marine Fisheries Service (NMFS), National Oceanic and Atmospheric Administration (NOAA), Commerce.

ACTION: Final rule.

SUMMARY: NMFS issues this final rule to implement measures to modify the existing reporting and recordkeeping requirements for federally permitted seafood dealers/processors, and the observer requirements for participating hagfish vessels. The New England

Fishery Management Council (Council) requested that this information collection program be developed to gather additional information on the unique aspects of the hagfish fishery and its interaction with other federally managed fisheries. The information collected from fishery participants (dealers/processors and vessels) will help the Council potentially develop a Hagfish Fishery Management Plan (FMP).

DATES: Effective May 23, 2007.

ADDRESSES: Copies of the regulatory amendment, its Regulatory Impact Review (RIR) and other supporting materials are available from Patricia A. Kurkul, Regional Administrator, Northeast Region, NMFS, One Blackburn Drive, Gloucester, MA 01930.

Written comments regarding the burden-hour estimates or other aspects of the collection-of-information requirements contained in this final rule may be submitted to Patricia A. Kurkul at the above address and by e-mail to *David_Rostker@omb.eop.gov*, or by fax to (202) 395–7285.

FOR FURTHER INFORMATION CONTACT: Douglas Potts, Fishery Management Specialist, (978) 281–9341.

SUPPLEMENTARY INFORMATION:

Background

On October 3, 2006, the Council sent NMFS a request to prepare an information collection program for the Atlantic hagfish fishery under the provisions of section 402(a) of the Magnuson-Stevens Fishery Conservation and Management Act (Magnuson-Stevens Act). The request is based on a desire to improve upon the quality and quantity of information available on the hagfish resource and its fishery operations. The Council plans to use this information to determine whether future management measures for hagfish under an FMP are necessary. Without this information collection on hagfish, future management measures may not capture accurately the geographic and seasonal aspects of the fishery, which reflect overseas demand, and ensure that the resource may be sustained in future years. This collection of information (with changes, as appropriate) may be extended through the development and implementation of a Hagfish FMP.

The Atlantic hagfish (*Myxine glutinosa*) fishery in New England was developed in the early 1990s, with the first reported landings of around 1 million lb (454 mt) in 1993. Korean buyers quickly recognized that a fishery in the New England area could provide the high-quality hagfish skins used in making leather, as well as hagfish meat for human consumption. Reported hagfish landings quadrupled during the first 4 years of the fishery (1993–1996), exceeding the highest reported landings in other North American hagfish fisheries (including British Columbia, Oregon, Washington, California, and Nova Scotia) by 1994.

Today, the hagfish fishery relies on revenues from the export of whole frozen hagfish product overseas, primarily to South Korea, for meat consumption. The hagfish fishery prosecuted off the coast of Gloucester, MA has changed from an inshore fishery comprised of small vessels to an offshore fishery that consists of large vessels. According to reports from a workshop that was held to identify the challenges in collecting information on this fishery, the reason for this change in the way the fishery is being conducted is that the fishery has experienced localized depletion in nearshore waters, necessitating movement of fishing effort to areas not historically fished for hagfish.

Dealer/processor Permitting and Reporting Requirements

To meet the Council's request for information, this final rule will require that all seafood dealers who intend to purchase hagfish caught in or from the Exclusive Economic Zone (EEZ) to be permitted under § 648.6, and to submit, on a weekly basis, an electronic dealer report containing the required trip-level information for each purchase of hagfish made from fishing vessels, as per the regulations at § 648.7. Hagfish dealers will be required to obtain an initial dealer permit upon implementation of the hagfish information collection requirements and to renew the permit annually thereafter. Reports furnished by permitted dealers will help determine the level of discards and discard mortality of hagfish returned to the sea in response to rejection by the dealer in port. In addition, the collection of dealer purchase reports will help to verify landings reported in Vessel Trip Reports (VTRs) for those vessels that have VTR requirements, and for those that do not, the dealers will be required to report vessel identifiers. It is unlikely that additional dealers will join the fishery because the fishery is driven by a narrowly focused export market (South Korea only) that is currently in equilibrium with supply. However, this permitting and reporting requirement will also enable the identification of any new vessel and/or dealer entrants into the fishery.

Dealer/processor Reports

All federally permitted seafood dealers subject to this final rule will be required to complete all sections of the Annual Processed Products Report (§ 648.7). The report can be used by the Council in developing an FMP, to estimate processing capacity, and to forecast and subsequently measure the potential economic impact of fishery management regulations on fish and shellfish supplies. Employment data collected through the report can also be used to analyze the seasonality of the fishery.

Observer Requirement

Under the hagfish information collection program, any vessel owner/operator that fishes for, catches, or lands hagfish, or intends to fish for, catch, or land hagfish in or from the EEZ will be required to carry an observer when requested by the Regional Administrator in accordance with § 648.11. Consistent with current observer regulations, hagfish vessel owners/operators will be required to call to arrange deployment of NMFS-approved observers on their vessels and to ensure adequate space for the observer aboard their vessels, once requested to carry an observer by the Regional Administrator. Although the vessels must call to arrange deployment of observers, hagfish vessels will not be required to pay for the observers; funding of observer coverage for this fishery will be provided by NMFS. These requests will be made for the purpose of monitoring fishing activities, collecting biological data, and complying with the information collection program requirements. Observers are particularly important because of the high discard rates that have been reported to occur in the hagfish fishery and because the proportion of the catch that is rejected by the dealer and later discarded at sea is not currently measured.

The hagfish observer coverage objectives will focus on the collection of basic fleet information and observations of fishing behavior, including, but not limited to, the distribution of fishing effort, number of hauls per trip, area/depth fished, trip length, soak time, discard rates of hagfish or other species, gear type/configuration, and gear deployment methodology. Understanding and quantifying the likelihood of marine mammal and sea turtle entanglements that may occur in hagfish gear in the areas fished is also an important observer program objective. The configuration of hagfish gear is similar enough to lobster gear that it is believed to pose the same or

similar entanglement threat to large whales; and there have been two large whale entanglements documented in the hagfish fishery: One in 1997 involving entanglement of a finback whale; and one in 2002 involving a humpback whale.

Comments and Responses

The deadline for comments on the proposed rule was December 1, 2006. NMFS received one comment letter that did not address the proposed rule.

Classification

The Administrator, Northeast Region, NMFS, determined that this regulatory amendment is necessary for the conservation and management of the hagfish fishery and that it is consistent with the Magnuson-Stevens Act and other applicable laws.

This final rule has been determined to be not significant for purposes of Executive Order 12866.

The Chief Counsel for Regulation of the Department of Commerce certified to the Chief Counsel for Advocacy of the Small Business Administration during the proposed rule stage that this action would not have a significant economic impact on a substantial number of small entities. The factual basis for the certification was published in the proposed rule and is not repeated here. No comments were received regarding this certification or the economic impacts of this proposed rule. As a result, a regulatory flexibility analysis was not required and none was prepared.

This final rule contains a collection-of-information requirement subject to the Paperwork Reduction Act (PRA) and which has been approved by OMB under control numbers 0648–0018, 0648–0229, and 0648–0555. The estimated public reporting burden per individual response for the new and revised collection of information requirements related to the hagfish information collection program are estimated to average: 2 minutes to request an observer (OMB #0648–0555); 4 minutes for a dealer purchase report (OMB #0648–0229); 15 minutes and 5 minutes for initial dealer permit application/renewal application (OMB #0648–0555), respectively; and 30 minutes for the Annual Processed Products Report (OMB #0648–0018). These reporting burden estimates include the time for reviewing instructions, searching existing data sources, gathering and maintaining the data needed, and completing and reviewing the collection of information. Send comments regarding these burden estimates or any other aspect of this data collection, including suggestions for reducing the burden, to NMFS (see **ADDRESSES**) and by e-mail to *David_Rostker@omb.eop.gov*, or fax to 202–395–7285. Notwithstanding any other provision of the law, no person is required to respond to, and no person shall be subject to penalty for failure to comply with, a collection of information subject to the requirements of the PRA, unless that collection of information displays a currently valid OMB control number.

List of Subjects

15 CFR Part 902

Reporting and recordkeeping requirements.

50 CFR Part 648

Fisheries, Fishing, Reporting and recordkeeping requirements.

Dated: April 13, 2007.

Samuel D. Rauch III,

Deputy Assistant Administrator for Regulatory Programs, National Marine Fisheries Service.

■ For the reasons set out in the preamble, 15 CFR chapter IX, part 902, and 50 CFR chapter VI, part 648, are amended as follows:

PART 902—NOAA INFORMATION COLLECTION REQUIREMENTS UNDER THE PAPERWORK REDUCTION ACT: OMB CONTROL NUMBERS

■ 1. The authority citation for part 902 continues to read as follows:

Authority: 44 U.S.C. 350 *et seq.*

■ 2. In § 902.1, the table in paragraph (b) under ''50 CFR'' is amended by revising entries for 648.6 and 648.11, in numerical order, to read as follows:

§ 902.1 OMB control numbers assigned pursuant to the paperwork Reduction Act

* * * * *

CFR part or section where the information collection requirement is located	Current OMB control number the information (All numbers begin with 0648–)
* * * *	*
50 CFR	
* * * *	*
648.6	–0202, –0555
* * * *	*
648.11	–0202, –0555
* * * *	*

50 CFR Chapter VI

PART 648—FISHERIES OF THE NORTHEASTERN UNITED STATES

■ 1. The authority citation for part 648 continues to read as follows:

Authority: 16 U.S.C. 1801 *et seq.*

■ 2. In § 648.2, a new definition for ''Atlantic hagfish'' is added, in alphabetical order, to read as follows:

§ 648.2 Definitions.

* * * * *

Atlantic hagfish means *Myxine glutinosa.*

* * * * *

■ 3. In § 648.6, paragraph (a)(1) is revised to read as follows:

§ 648.6 Dealer/processor permits.

(a) * * *

(1) All dealers of NE multispecies, monkfish, skates, Atlantic herring, Atlantic sea scallop, Atlantic deep-sea red crab, spiny dogfish, summer flounder, Atlantic surf clam, ocean quahog, Atlantic mackerel, squid, butterfish, scup, bluefish, tilefish, and black sea bass; Atlantic surf clam and ocean quahog processors; Atlantic hagfish dealers and/or processors, and Atlantic herring processors or dealers, as described in § 648.2; must have been issued under this section, and have in their possession, a valid permit or permits for these species.

* * * * *

■ 4. In § 648.7, paragraph (a)(3)(iv) is added to read as follows:

§ 648.7 Recordkeeping and reporting requirements.

(a) * * *

(3) * * *

(iv) Atlantic hagfish processors must complete and submit all sections of the Annual Processed Products Report.

* * * * *

■ 5. In § 648.11, paragraph (a) is revised to read as follows:

§ 648.11 At-sea sea sampler/observer coverage.

(a) The Regional Administrator may request any vessel holding a permit for Atlantic sea scallops, NE multispecies,

monkfish, skates, Atlantic mackerel, squid, butterfish, scup, black sea bass, bluefish, spiny dogfish, Atlantic herring, tilefish, or Atlantic deep-sea red crab; or a moratorium permit for summer flounder; to carry a NMFS-approved sea sampler/observer. Also, any vessel or vessel owner/operator that fishes for, catches or lands hagfish, or intends to fish for, catch, or land hagfish in or from the exclusive economic zone must carry a NMFS-approved sea sampler/observer when requested by the Regional Administrator in accordance with the requirements of this section.

* * * * *

[FR Doc. 07–1953 Filed 4–20–07; 8:45 am]

BILLING CODE 3510–22–S

DEPARTMENT OF JUSTICE

Drug Enforcement Administration

21 CFR Part 1310

[Docket No. DEA–299I]

RIN 1117–AB12

Control of a Chemical Precursor Used in the Illicit Manufacture of Fentanyl as a List I Chemical

AGENCY: Drug Enforcement Administration (DEA), U.S. Department of Justice.

ACTION: Interim rule with request for comments.

SUMMARY: This rulemaking controls the chemical N-phenethyl-4-piperidone (NPP) as a List I chemical under the Controlled Substances Act (CSA) (21 U.S.C. 801 *et seq.*). Clandestine laboratories are using this chemical to illicitly manufacture the schedule II controlled substance fentanyl.

The recent distribution of illicitly manufactured fentanyl has caused an unprecedented outbreak of hundreds of suspected fentanyl-related overdoses, at least 972 confirmed fentanyl-related deaths, and 162 suspected fentanyl-related deaths occurring mostly in Delaware, Illinois, Maryland, Michigan, Missouri, New Jersey, and Pennsylvania. NPP has been identified as the starting material in several seized fentanyl clandestine laboratories. In addition to DEA's concern regarding the deaths associated with illicitly manufactured fentanyl, DEA is extremely concerned about the safety of law enforcement officers encountering these clandestine laboratories. Therefore, DEA is regulating NPP as a List I chemical through this Interim Rulemaking. DEA is soliciting comments on this Interim Rule.

This rulemaking will subject handlers of NPP to the chemical regulatory provisions of the CSA and its implementing regulations, including 21 CFR Parts 1309, 1310, 1313, and 1316. This rulemaking does not establish a threshold for domestic and international transactions of NPP. As such, all transactions involving NPP, regardless of size, shall be regulated. This rulemaking also specifies that chemical mixtures containing NPP will not be exempt from regulatory requirements at any concentration. Therefore, all transactions of chemical mixtures containing any quantity of NPP will be regulated and will be subject to control under the CSA.

DATES: This rulemaking will become effective on April 23, 2007. Persons seeking registration must apply on or before June 22, 2007 to continue their business pending final action by DEA on their application.

Written comments must be postmarked, and electronic comments must be sent on or before June 22, 2007.

ADDRESSES: To ensure proper handling of comments, please reference ''Docket No. DEA–299I'' on all written and electronic correspondence. Written comments via regular mail should be sent to the Deputy Assistant Administrator, Office of Diversion Control, Drug Enforcement Administration, Washington, DC 20537, Attention: DEA **Federal Register** Representative/ODL. Written comments sent via express mail should be sent to DEA Headquarters, Attention: DEA **Federal Register** Representative/ODL, 2401 Jefferson-Davis Highway, Alexandria, VA 22301. Comments may be sent directly to DEA electronically by sending an electronic message to *dea.diversion.policy@usdoj.gov.* Comments may also be sent electronically through *http://www.regulations.gov* using the electronic comment form provided on that site. An electronic copy of this document is also available at the *http://www.regulations.gov* Web site. DEA will accept attachments to electronic comments in Microsoft word, WordPerfect, Adobe PDF, or Excel file formats only. DEA will not accept any file formats other than those specifically listed here.

FOR FURTHER INFORMATION CONTACT: Christine A. Sannerud, Ph.D., Chief, Drug and Chemical Evaluation Section, Office of Diversion Control, Drug Enforcement Administration, Washington, DC 20537 at (202) 307–7183.

SUPPLEMENTARY INFORMATION:

Background

The DEA is extremely concerned with the increase in the illicit manufacture and distribution of fentanyl, which has resulted in hundreds of fentanyl-related overdoses and fentanyl-related deaths across the country. Fentanyl is a schedule II controlled substance. Fentanyl and analogues of fentanyl are the most potent opioids available for human and veterinary use. Fentanyl produces opioid effects that are indistinguishable from morphine or heroin. However, fentanyl has a greater potency and a shorter duration of action. Fentanyl is approximately 50 to 100 times more potent than morphine and 30 to 50 times more potent than heroin depending on the physiological or behavioral endpoints being measured, the route of administration, and other factors.

The legitimate medical use of fentanyl is for anesthesia and analgesia, but fentanyl's euphoric effects are highly sought after by narcotic addicts. Fentanyl can serve as a direct pharmacological substitute for heroin in opioid dependent individuals. However, fentanyl is a very dangerous substitute for heroin because the amount that produces a euphoric effect also induces respiratory depression. Furthermore, due to fentanyl's increased potency over heroin, illicit drug dealers have trouble adjusting (''cutting'') pure fentanyl into proper dosage concentrations. As a result, unsuspecting heroin users or heroin users who know the substance contains fentanyl have difficulty determining how much to take to get their ''high'' and mistakenly take a lethal quantity of the fentanyl. Unfortunately, only a slight excess in the amount of fentanyl taken can be, and is often, lethal because the resulting level of respiratory depression is sufficient to cause the user to stop breathing.

In April 2006, DEA issued an officer safety alert regarding the special precautions that must be observed when handling and processing suspected fentanyl. DEA is concerned with the unusual health hazards posed to law enforcement officers and forensic chemists from exposure to high purity fentanyl during law enforcement operations. Since high purity fentanyl can be fatal if sub-milligram quantities are accidentally swallowed, inhaled, or absorbed through the skin, the potential for lethal fentanyl exposure to law enforcement officers exists during raids of fentanyl clandestine laboratories, during seizures of drug exhibits, and during subsequent testing of pure fentanyl in the forensic laboratories. The

primary lethal exposure routes from high purity fentanyl are the following: accidental inhalation of airborne fentanyl powder; accidental transfer of fentanyl powder/liquid from contaminated hands/gloves that inadvertently touch the mouth, nose, or other mucous membranes; and accidental transfer through cuts in the skin or roughly abraded skin.

Illicit Manufacture of Fentanyl

DEA has determined from the forensic testing of seized illicit fentanyl that both the Janssen synthesis route and the Siegfried method are being used to clandestinely produce fentanyl. In 1965, Janssen Pharmaceutical patented the original synthesis procedure for fentanyl, which used n-benzyl-4-piperidone as the starting material. The Janssen synthesis route is difficult to perform and is beyond the rudimentary skills of most clandestine laboratory operators. Only individuals who have acquired advanced chemistry knowledge and skills have successfully used this synthesis route. Forensic laboratories can determine whether fentanyl was manufactured illicitly by the Janssen route by detecting the impurity benzylfentanyl in the tested fentanyl drug exhibit.

In the early 1980s, an alternate fentanyl synthesis route was published in the scientific literature that uses NPP as the starting material. The Chemical Abstracts Service Registry Number [1] (CASRN) for NPP is 39742–60–4. The NPP synthesis route is described on the Internet and is referred to as the Siegfried method. The detection of the impurity 4-anilino-N-phenethyl-4-piperidine (ANPP) without the presence of benzylfentanyl in the fentanyl drug exhibit suggests that the fentanyl was manufactured by the Siegfried method (*i.e.*, a small amount of ANPP is not consumed in the last reaction in the synthesis and a trace amount of ANPP can be found in the illicit fentanyl produced).

Since 2000, four of the five domestic fentanyl clandestine laboratories seized by law enforcement have used the Siegfried method or a modified version of the Siegfried method to manufacture the illicit fentanyl. From these four domestic clandestine laboratories, about 800 grams equivalent of pure fentanyl were seized. Furthermore, enough of the unused NPP precursor chemical was also seized to make an additional 5,000 grams of pure fentanyl. Therefore, from the amount of illicit fentanyl and precursor chemicals found at these four domestic fentanyl laboratories using the Seigfried method or modified Seigfried method, the laboratories could have potentially generated a total of 5,800 grams of illicit fentanyl. Since fentanyl is potent in sub-milligram quantities, the subsequent ''cutting'' of 5,800 grams of illicit fentanyl would be sufficient to make about 46 million fentanyl doses.

Three of the domestic fentanyl clandestine laboratories seized by law enforcement are known to have obtained the NPP precursor chemical from domestic suppliers. This rule will make the purchase of NPP from domestic or international suppliers a regulated transaction. In this way, DEA will be informed of the sale of NPP and can take appropriate action, if necessary. Thus, DEA is regulating the chemical NPP as a List I chemical under the CSA (21 U.S.C. 801 et seq.). Furthermore, under 21 U.S.C 811(e) of the CSA, DEA also intends to control ANPP as a schedule II immediate precursor to fentanyl under a separate rulemaking.

Illicit Fentanyl-Related Deaths

DEA has seen a recent increase in the illicit manufacture of fentanyl. In just the last three years, a total of four domestic fentanyl clandestine laboratories have been seized. Furthermore, in 2006, DEA saw a sharp increase in the seizures of illicit fentanyl. Law enforcement seized a one kilogram package of high purity illicitly-manufactured fentanyl hydrochloride in California, a variety of illicit tablets containing fentanyl whose appearance is designed to mimic Ecstasy and OxyContin® tablets, and various mixtures of illicitly-manufactured fentanyl powders combined with heroin or cocaine from locations across the United States.

The distribution of illicit fentanyl or illicit fentanyl combined with heroin or cocaine (*i.e.*, a ''speedball'') has resulted in an outbreak of hundreds of suspected fentanyl-related overdoses, at least 972 confirmed fentanyl-related deaths, and 162 suspected fentanyl-related deaths occurring mostly in Delaware, Illinois, Maryland, Michigan, Missouri, New Jersey, and Pennsylvania according to the Centers for Disease Control and Prevention (CDC) and local medical examiners. DEA terms fentanyl-related deaths ''suspected'' until confirmed through the completion of an autopsy, a positive toxicological testing result for fentanyl in the blood, and the reporting of the death to the DEA.

Confirmed illicit fentanyl-related deaths have been reported to the DEA for the following six jurisdictions: Philadelphia, Pennsylvania; Cook County, Illinois; Wayne County, Michigan; St. Louis County, Missouri; the entire state of New Jersey, and the entire state of Delaware. Between April 13, 2006, and September 27, 2006, the Philadelphia Medical Examiner's Office confirmed 179 fentanyl-related deaths. Between April 18, 2005, and November 9, 2006, the Chief Medical Examiner of Cook County, Illinois confirmed 314 fentanyl-related deaths in the city of Chicago and its suburbs. Between August 27, 2005, and December 31, 2006, the Wayne County Medical Examiner confirmed 230 fentanyl-related deaths in the city of Detroit and the surrounding county. Between August 16, 2005, and August 28, 2006, the St. Louis Medical Examiner confirmed 33 fentanyl-related deaths in St. Louis County. Between January 25, 2006, and September 21, 2006, the New Jersey Department of Health confirmed 86 fentanyl-related deaths in the entire State of New Jersey. Between April 20, 2006, and September 2, 2006, the Chief Medical Examiner for Wilmington, Delaware, confirmed 19 fentanyl-related deaths in the entire state of Delaware. Since autopsies and toxicological testing for fentanyl take several weeks to complete and report, the above medical examiner reports represent the most current information regarding confirmed deaths linked to fentanyl available to DEA.

The graph below shows the monthly rate of fentanyl-related deaths in the city of Chicago and its suburbs (Cook County, Illinois) through the beginning of November 2006. The rapid onset of the illicit fentanyl outbreak can be observed in the graph.

BILLING CODE 4410–09–P

[1] The Chemical Abstracts Service Registry Number (CASRN) is created by the Chemical Abstracts Service (CAS) Division of the American Chemical Society and is part of an automated information system housing data and information on specific, definable chemical substances. The CAS registry number provides consistent and unambiguous identification of chemicals and facilitates sharing of chemical information.

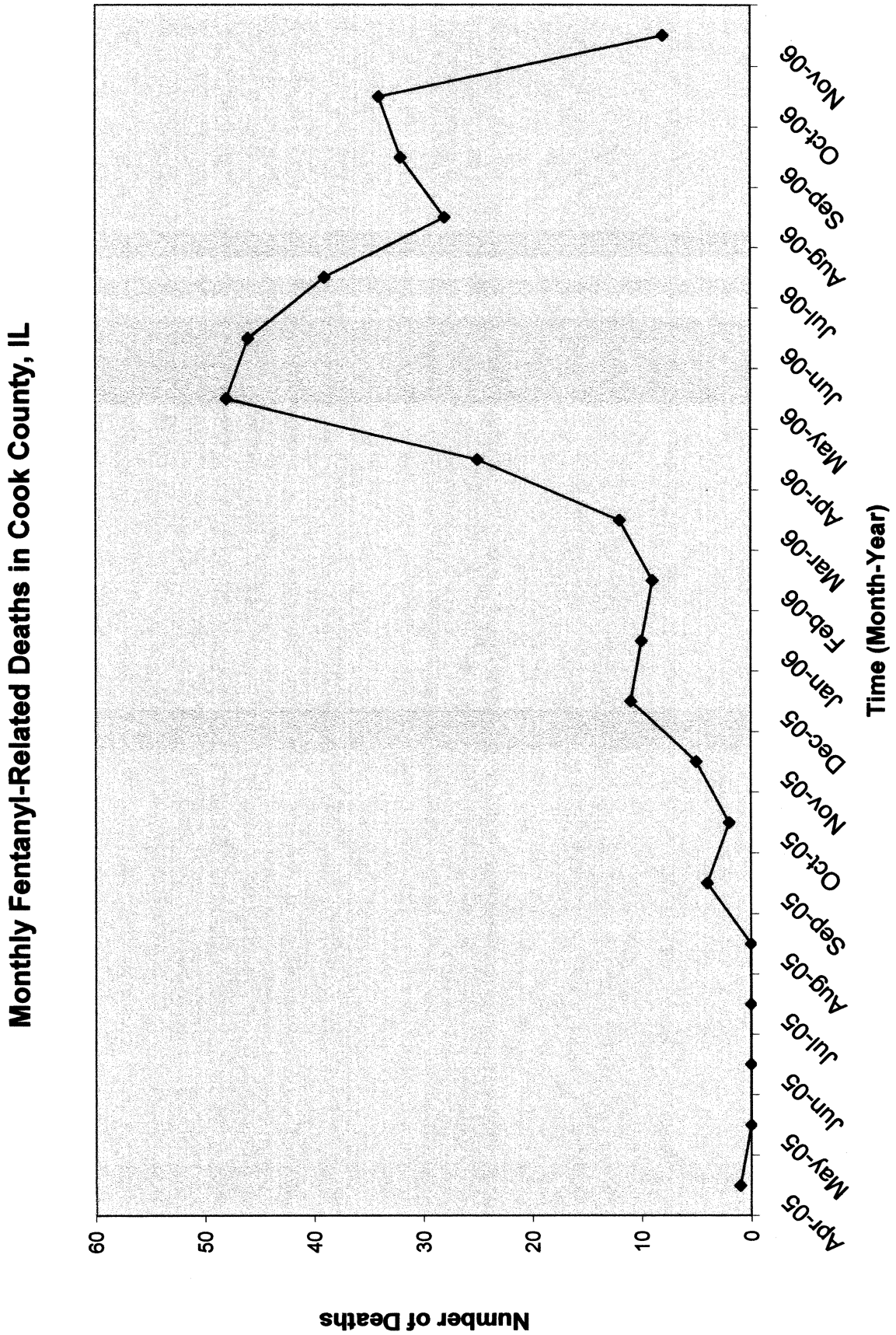

BILLING CODE 4410–09–C

Beyond these 972 confirmed fentanyl-related deaths in the six jurisdictions outlined above, other areas of the country have also been significantly impacted by this problem. There are 162 suspected fentanyl-related deaths in these areas:

- Grundy County, Illinois.
- Macomb, Oakland & Genesee Counties of Michigan.
- Rest of Pennsylvania.
- Maryland, Massachusetts, Virginia, New Hampshire, Maine, Kentucky, and Ohio.

From the information and data collected, there is a strong indication that the fentanyl in these confirmed and suspected fentanyl-related deaths is illicitly manufactured rather than diverted from legal pharmaceutical manufacturers. Deaths related to fentanyl pharmaceutical products were eliminated from the fentanyl-related deaths reported to the DEA by both the Cook County and Philadelphia medical examiners. Furthermore, forensic testing of seized fentanyl drug exhibits has identified the illicit fentanyl impurities benzylfentanyl and/or ANPP in the majority of these exhibits. The current forensic data suggests that most of these fentanyl-related deaths are from fentanyl illicitly manufactured by the Siegfried method using NPP.

Availability of the Precursor Chemical

DEA has determined that the precursor chemical, NPP, is readily available from commercial chemical suppliers. DEA has identified at least 62 suppliers of NPP, of which 14 are located domestically and 48 are located internationally in Germany, India, and China. Since 2000, law enforcement has evidence to support that the NPP precursor chemical was obtained from domestic suppliers for three domestic fentanyl clandestine laboratories. Furthermore, a fentanyl clandestine laboratory in Mexico is believed to have obtained the NPP precursor chemical from an international supplier. Law enforcement has identified four separate chemical suppliers that have distributed NPP to illicit fentanyl clandestine laboratories. This rule will make the domestic sale of NPP a regulated transaction. This rule will also make the importation of NPP from an international supplier a regulated transaction. Documenting the domestic sale and importation of NPP is needed by law enforcement to identify the domestic diversion of NPP for the illicit manufacture of fentanyl in the United States.

Regulation of NPP as a List I Chemical

The CSA, specifically 21 U.S.C. 802(34), 21 U.S.C. 802(35), and its implementing regulations at 21 CFR 1310.02(c), provide the Attorney General with the authority to specify, by regulation, additional precursor or essential chemicals as ''listed chemicals'' if they are used in the manufacture of controlled substances in violation of the CSA. NPP is being used by clandestine laboratories as the starting material for the illicit manufacture of fentanyl. This interim rule regulates NPP as a List I chemical because DEA finds that NPP is used in the illicit manufacture of the controlled substance fentanyl and is important to the illicit manufacture of the controlled substance fentanyl.

Handlers of NPP will become subject to the chemical regulatory provisions of the CSA, including 21 CFR Parts 1309, 1310, 1313, and 1316. This rulemaking does not establish a threshold for domestic and import transactions of NPP pursuant to the provisions of 21 CFR 1310.04(g). Due to the high potency of fentanyl, even a single gram (*i.e.*, 1/28th of an ounce) of NPP can be used illicitly to make about 7,750 dosage units of fentanyl. Therefore, all NPP transactions regardless of size shall be regulated transactions as defined in 21 CFR 1300.02(b)(28). As such, all NPP transactions will be subject to recordkeeping, annual manufacturer reporting of inventory and use data, import/export controls, and other CSA chemical regulatory requirements.

Chemical Mixtures of NPP

This rulemaking also specifies that chemical mixtures containing NPP will not be exempt from regulatory requirements at any concentration, unless an application for exemption of a chemical mixture is submitted by a NPP manufacturer and the application is reviewed and accepted by the DEA under 21 CFR 1310.13 (Exemption by Application Process). Since even a small amount of NPP is able to make a significant amount of fentanyl, the control of chemical mixtures containing any amount of NPP is necessary to prevent the illicit extraction, isolation, and use of the NPP. Therefore, all chemical mixtures containing any quantity of NPP will be subject to CSA control, unless the NPP manufacturer is granted an exemption by the application process discussed below. This interim rule modifies the Table of Concentration Limits in 21 CFR 1310.12(c) to reflect the fact that chemical mixtures containing any amount of NPP are subject to CSA chemical control provisions.

Exemption by Application Process

DEA has implemented an application process to exempt mixtures from the requirements of the CSA and its implementing regulations (21 CFR 1310.13). This application process was finalized in the Final Rule (68 FR 23195) published May 1, 2003. Under the application process, manufacturers may submit an application for exemption for those mixtures that do not qualify for automatic exemption. Exemption status can be granted if DEA determines that the mixture is formulated in such a way that it cannot be easily used in the illicit production of a controlled substance and that the listed chemical cannot be readily recovered (*i.e.*, it meets the conditions in 21 U.S.C. 802(39)(A)(vi)).

Requirements for Handling List I Chemicals

The designation of NPP as a List I chemical will subject NPP handlers to all of the regulatory controls and administrative, civil, and criminal sanctions applicable to the manufacture, distribution, importing, and exporting of a List I chemical. Persons potentially handling NPP, including regulated chemical mixtures containing NPP, will be required to comply with the following List I chemical regulations:

1. *Registration.* Any person who manufactures or distributes a List I chemical, or proposes to engage in the manufacture or distribution of a List I chemical, must obtain a registration pursuant to the CSA (21 U.S.C. 822). Regulations describing registration for List I chemical handlers are set forth in 21 CFR Part 1309.

Consistent with 21 CFR Parts 1309 and 1310, separate registrations will be required for manufacturing, distribution, importing, and exporting of NPP. Different locations operated by a single entity require separate registration if any location is involved with the distribution, importation, or exportation of NPP. Further, a separate registration is required for each principal place of business at one general physical location where List I chemicals are distributed, imported, or exported by a person (21 CFR 1309.23). Any person distributing, importing, or exporting an NPP chemical mixture will be subject to the registration requirement under the CSA as well.

Effective April 23, 2007, any person manufacturing, distributing, importing, or exporting NPP or a chemical mixture containing NPP will become subject to the registration requirement under the

CSA. DEA recognizes, however, that it is not possible for persons who are newly subject to the registration requirement to complete and submit an application for registration and for DEA to issue registrations for those activities immediately. Therefore, to allow continued legitimate commerce, DEA is establishing in § 1310.09(h) a temporary exemption from the registration requirement for persons desiring to engage in the manufacture, distribution, importation, or exportation of NPP, provided that DEA receives a properly completed application for registration on or before June 22, 2007. The temporary exemption for such persons will remain in effect until DEA takes final action on their application for registration or on their application for exemption for a chemical mixture containing NPP pursuant to § 1310.13.

The temporary exemption applies solely to the registration requirement; all other chemical control requirements, including recordkeeping and reporting, are effective on April 23, 2007. Additionally, the temporary exemption does not suspend applicable Federal criminal laws relating to this chemical, nor does it supersede state or local laws or regulations. All manufacturers, distributors, importers, and exporters of NPP or chemical mixtures containing NPP must comply with applicable state and local requirements in addition to the CSA regulatory controls.

2. *Records and Reports.* The CSA (21 U.S.C. 830) requires that certain records be kept and reports be made with respect to listed chemicals. Regulations describing recordkeeping and reporting requirements are set forth in 21 CFR Part 1310. Pursuant to 21 CFR 1310.04, a record must be made and maintained for two years after the date of a transaction involving a listed chemical, provided the transaction is a regulated transaction.

Each regulated bulk manufacturer of a listed chemical will be required to submit manufacturing, inventory and use data on an annual basis (21 CFR 1310.05(d)). Existing standard industry reports containing the required information will be acceptable, provided the information is readily retrievable from the report.

Title 21 CFR 1310.05(a) requires that each regulated person shall report to DEA any regulated transaction involving an extraordinary quantity of a listed chemical, an uncommon method of payment or delivery, or any other circumstance that the regulated person believes may indicate that the listed chemical will be used in violation of the CSA and its corresponding regulations.

3. *Import/Export.* All imports/exports of a listed chemical shall comply with the CSA import and export provisions including 21 U.S.C. 957 and 971. Regulations for importation and exportation of List I chemicals are described in 21 CFR Part 1313.

4. *Security.* All applicants and registrants shall provide effective controls against theft and diversion of chemicals as described in 21 CFR 1309.71.

5. *Administrative Inspection.* Places, including factories, warehouses, or other establishments and conveyances, where registrants or other regulated persons may lawfully hold, manufacture, distribute, dispense, administer, or otherwise dispose of a regulated chemical/chemical mixture or where records relating to those activities are maintained, are controlled premises as defined in 21 CFR 1316.02(c). The CSA (21 U.S.C. 880) allows for administrative inspections of these controlled premises as provided in 21 CFR 1316 Subpart A.

Justification for Interim Rulemaking

Under 5 U.S.C. 553(b)(B), an agency may forgo a Notice of Proposed Rulemaking and the accompanying period of public comment where ''the agency for good cause finds (and incorporates the finding and a brief statement of the reasons therefore in the rules issued) that notice and public procedure thereon are impracticable, unnecessary, or contrary to the public interest.'' DEA is implementing these controls as an Interim Rule because DEA has determined that the delay necessitated by following public notice and comment procedures would be ''contrary to the public interest.''

The public harm caused by the current illicit manufacture and distribution of fentanyl is unprecedented. The higher potency of fentanyl relative to heroin prevents illicit drug dealers from adjusting (''cutting'') pure fentanyl into fixed, predictable, non-lethal dosage concentrations resulting in overdoses and deaths among the heroin user population. The manufacture and distribution of illicit fentanyl has generated a pattern of outbreaks of overdoses and deaths across the United States. Since April 2005, the current outbreak of illicit fentanyl is responsible for at least 972 confirmed fentanyl-related deaths and an additional 162 suspected fentanyl-related deaths. Most of the fentanyl-related deaths have occurred since February 2006 and have occurred mostly in the Chicago, Detroit, and Philadelphia metropolitan areas. These fentanyl-related deaths are continuing at a sustained rate.

The current volume of deaths is creating a growing crisis for law enforcement and health authorities. In response to the emerging crisis, DEA joined Chicago area law enforcement agencies to convene an emergency two-day conference on fentanyl in Chicago in June 2006 and the Office of National Drug Control Policy (ONDCP) convened a one-day demand reduction forum in Philadelphia in July 2006. Numerous law enforcement and health authorities expressed concern regarding recent increases in clandestine production of fentanyl and the resulting overdoses and deaths. The testing of drug exhibits by Federal, State, and local forensic laboratories confirms that the bulk of the fentanyl being distributed in the outbreak areas has been manufactured illicitly. Furthermore, the lack of a sudden increase in the diversion of fentanyl-containing pharmaceutical products supports the conclusion that the current outbreak of fentanyl-related deaths is from illicitly manufactured fentanyl.

The increase in street-level fentanyl may be the result of the relative ease with which fentanyl can be produced via the Siegfried method and the widespread distribution of the Siegfried method on the Internet. Preliminary data indicates that the majority of the deaths in the current fentanyl outbreak have been caused by the distribution of illicit fentanyl that was made by the Siegfried method. This determination is based on the identification of ANPP and the absence of the benzylfentanyl impurity in seized fentanyl drug exhibits. The starting material for the Siegfried method, NPP, is currently unregulated and readily available from both domestic and international chemical supply companies.

Immediate action at the Federal level is warranted to prevent the unregulated manufacture, importation, exportation, and distribution of the NPP precursor chemical. DEA, as well as other law enforcement and public health authorities, have concluded that this action is necessary to prevent any further domestic illicit production of fentanyl. Law enforcement has postulated that many of the fentanyl-related overdoses and deaths in the Chicago and Detroit areas may be associated with a clandestine fentanyl laboratory recently seized in Mexico. However, a significant number of the fentanyl-related overdoses and deaths may also be associated with domestic clandestine fentanyl laboratories. Control of NPP will aid DEA's efforts to combat domestic production of illicit

fentanyl by enabling DEA to track NPP from its importation through all domestic transactions. Furthermore, the regulatory controls on the exportation of NPP to potential source countries will help DEA prevent the use of NPP exported from the United States for the foreign production of illicit fentanyl.

In April 2006, DEA issued an officer safety alert regarding the special precautions that must be observed when handling and processing suspected fentanyl. DEA is concerned with the unusual health hazards posed to law enforcement officers and forensic chemists from exposure to high purity fentanyl during law enforcement operations. Since high purity fentanyl can be fatal if sub-milligram quantities are accidentally swallowed, inhaled, or absorbed through the skin, the potential for lethal fentanyl exposure to law enforcement officers exists during raids of fentanyl clandestine laboratories, during seizures of drug exhibits, and during subsequent testing of pure fentanyl in the forensic laboratories. The primary lethal exposure routes from high purity fentanyl are the following: Accidental inhalation of airborne fentanyl powder; accidental transfer of fentanyl powder/liquid from contaminated hands/gloves that inadvertently touch the mouth, nose, or other mucous membranes; and accidental transfer through cuts in the skin or roughly abraded skin.

Another reason DEA is issuing the regulation of NPP as an Interim Rule is to prevent illicit fentanyl manufacturers from stockpiling NPP. A Notice of Proposed Rulemaking would provide advance warning to illicit fentanyl manufacturers of DEA's intent to control NPP. The illicit fentanyl manufacturers could easily stockpile multiple kilograms of NPP undetected before the chemical becomes regulated. Due to the potency of fentanyl, the stockpiling of as little as 10 kilograms of NPP is sufficient to cause another outbreak of fentanyl-related deaths of the unprecedented magnitude the U.S. is currently experiencing.

The Administrative Procedure Act permits an agency to forgo the delay in effective date associated with substantive rules ''for good cause found and published with the rule'' (5 U.S.C. 553(d)(3)). For the same reasons discussed above, in order to protect the public health and prevent further illicit production of fentanyl, this rule shall be effective immediately upon publication. Furthermore, pursuant to its authority under 21 U.S.C. 821 and 871, DEA has concluded that the threat to public health and safety is such that it is necessary and appropriate for DEA to forgo the requirements of 21 CFR 1310.02(c) that the agency publish a proposal 30 days prior to adding a listed chemical by final rule.

Handling of Confidential or Proprietary Information

Confidential or proprietary information may be submitted as part of a comment regarding this Interim Rulemaking. Confidential or proprietary information should be clearly identified at the beginning of the comment. Information designated as confidential or proprietary will be treated accordingly. The release of confidential business information is protected from disclosure by Exemption 4 of the Freedom of Information Act (FOIA), 5 U.S.C. 552(b)(4), and the U.S. Department of Justice procedures set forth in 28 CFR 16.8. Comments may be submitted using the information provided in the **ADDRESSES** section of this document, and must be postmarked on or before June 22, 2007.

Regulatory Certifications

Regulatory Flexibility Act and Small Business Concerns

The Deputy Administrator hereby certifies that this rulemaking has been drafted in accordance with the Regulatory Flexibility Act (5 U.S.C. 605(b)). The Regulatory Flexibility Act (RFA) applies to rules that are subject to notice and comment. DEA is issuing this rule as an emergency action and an interim final rule. Therefore, the RFA provisions do not apply. DEA did consider, however, the impact on small entities.

Some of the firms DEA identified as potentially handling NPP are small entities. The highest cost that the rule would impose on these firms is less than $2,500 for registration. The smallest firm (1 to 4 employees) in the organic chemical sector has annual revenues of about $1.1 million. For those not already registered with DEA, the cost of registration represents 0.2 percent of annual revenues, which does not constitute a significant economic impact. Consequently, this rule will not have a significant economic impact on a substantial number of small entities.

Executive Order 12866

The Deputy Administrator certifies that this rulemaking has been drafted in accordance with the principles in Executive Order 12866 § 1(b). It has been determined that this is ''a significant regulatory action.'' Therefore, this action has been reviewed by the Office of Management and Budget.

DEA is listing NPP as a List I chemical. Anyone manufacturing, distributing, importing, or exporting NPP will have to register each location where NPP is handled, maintain records of transactions involving NPP, and take steps to ensure that the chemicals are secure (*e.g.*, stored in sealed containers in areas where access can be controlled or monitored). The requirement for records of transactions can be met using routine business records (*e.g.*, purchase orders, shipping papers).

DEA has identified 14 domestic chemical companies that supply NPP and that would be required to comply with this rule. Furthermore, DEA has determined that the vast majority of the domestic use of NPP is for the manufacture of the schedule II drug fentanyl. Eight companies may domestically manufacture NPP, of which two of these companies may also import NPP. However, DEA has not been able to determine whether these companies are currently manufacturing NPP. Some companies may not manufacture NPP, but rather purchase NPP in order to redistribute it to meet special orders. Other companies may manufacture NPP upon receiving an order; one company indicated that it has not produced NPP for two years. DEA has identified an additional six domestic companies that appear to only import NPP for subsequent domestic distribution. DEA has been able to document one domestic pharmaceutical company that uses NPP to manufacture fentanyl or fentanyl analogues.

The cost of compliance with the chemical requirements is basically the cost of the annual registration fee ($2,430 for manufacturers; $1,215 for distributors, importers, and exporters) plus the time required to complete the registration form (0.5 hours); registrations can be completed online. The recordkeeping requirements can be met with normal business records. The FDA requirements for manufacturing practices for pharmaceutical ingredients, together with the value of the products, generally ensure that firms already have security measures adequate to meet DEA's requirements. Even if the two firms that could manufacture or import obtained separate registrations for the two business activities, the total cost of the rule would be less than $30,000, which is the rounded estimate of the cost for all fourteen firms to register with DEA in their respective business activities.

Executive Order 12988

This regulation meets the applicable standards set forth in Sections 3(a) and

3(b)(2) of Executive Order 12988, Civil Justice Reform.

Executive Order 13132

This rulemaking does not preempt or modify any provision of State law; nor does it impose enforcement responsibilities on any State; nor does it diminish the power of any State to enforce its own laws. Accordingly, this rulemaking does not have federalism implications warranting the application of Executive Order 13132.

Paperwork Reduction Act

This Interim Rulemaking will subject persons handling NPP to CSA List I regulatory requirements. Any person who manufactures, distributes, imports, or exports NPP must register with DEA. As discussed previously, DEA has identified 14 domestic chemical companies who would be required to register with DEA. Persons wishing to register with DEA to handle List I chemicals must do so using DEA Form 510, Application for Registration under Domestic Chemical Diversion Control Act of 1993, and persons wishing to renew their registration must do so using DEA Form 510a, Renewal Application for Registration under Domestic Chemical Diversion Control Act of 1993 [OMB control # 1117–0031].

Persons importing, exporting, and conducting international transactions involving NPP must comply with regulatory requirements regarding the notification of DEA of pending transactions. As DEA cannot estimate how many of the 14 identified firms import, export, or conduct international transactions with NPP, DEA is estimating that all identified firms conduct such transactions. DEA has no information regarding actual number of transactions conducted annually, but based on the uses of NPP believes that the number of transactions is very low. DEA is estimating that each firm will conduct five import transactions, and two export transactions annually. DEA has not identified any firms serving as United States brokers conducting international transactions involving NPP. Therefore, DEA has not estimated any international transactions involving NPP.

The U.S. Department of Justice, Drug Enforcement Administration, has submitted the following information collection requests to the Office of Management and Budget (OMB) for review and clearance in accordance with review procedures of the Paperwork Reduction Act of 1995. The information collections are published to obtain comments from the public and affected agencies.

All comments and suggestions, or questions regarding additional information, to include obtaining a copy of the proposed information collection instrument with instructions, should be directed to Mark W. Caverly, Chief, Liaison and Policy Section, Office of Diversion Control, Drug Enforcement Administration, Washington, DC 20537.

Written comments and suggestions from the public and affected agencies concerning the collections of information are encouraged. Your comments on the information collection-related aspects of this rule should address one or more of the following four points:

(1) Evaluate whether the proposed collection of information is necessary for the proper performance of the functions of the agency, including whether the information will have practical utility;

(2) Evaluate the accuracy of the agency's estimate of the burden of the proposed collection of information, including the validity of the methodology and assumptions used;

(3) Enhance the quality, utility, and clarity of the information to be collected; and

(4) Minimize the burden of the collection of information on those who are to respond, including through the use of appropriate automated, electronic, mechanical, or other technological collection techniques or other forms of information technology, *e.g.*, permitting electronic submission of responses.

Overview of Information Collections 1117–0031:

(1) *Type of Information Collection:* Revision of an existing collection.

(2) *Title of the Form/Collection:* Application for Registration under Domestic Chemical Diversion Control Act of 1993 and Renewal Application for Registration under Domestic Chemical Diversion Control Act of 1993.

(3) *Agency form number, if any, and the applicable component of the U.S. Department of Justice sponsoring the collection:*

Form Number: DEA Form 510 and DEA Form 510a.

Office of Diversion Control, Drug Enforcement Administration, U.S. Department of Justice.

(4) *Affected public who will be asked or required to respond, as well as a brief abstract:*

Primary: Business or other for-profit.

Other: Not-for-profit, government agencies.

Abstract: The Domestic Chemical Diversion Control Act requires that manufacturers, distributors, importers, and exporters of List I chemicals which may be diverted in the United States for the production of illicit drugs must register with DEA. Registration provides a system to aid in the tracking of the distribution of List I chemicals.

(5) *An estimate of the total number of respondents and the amount of time estimated for an average respondent to respond:* DEA estimates that 2,301 persons respond to this collection annually. DEA estimates that it takes 30 minutes for an average respondent to respond when completing the application on paper, and 15 minutes for an average respondent to respond when completing an application electronically. This application is submitted annually.

(6) *An estimate of the total public burden (in hours) associated with the collection:* DEA estimates that this collection has a public burden of 783 hours annually.

Form	Number respondents	Total burden hours
DEA–510 (paper)	187	93.5
DEA–510 (electronic)	102	25.5
DEA–510a (paper)	644	322
DEA–510a (electronic)	1,368	342
Total		783

Overview of Information Collection 1117–0023:

(1) *Type of Information Collection:* Revision of an existing collection.

(2) *Title of the Form/Collection:* Import/Export Declaration for List I and List II Chemicals.

(3) *Agency form number, if any, and the applicable component of the U.S. Department of Justice sponsoring the collection:*

Form Number: DEA Form 486.

Office of Diversion Control, Drug Enforcement Administration, U.S. Department of Justice.

(4) *Affected public who will be asked or required to respond, as well as a brief abstract:*

Primary: Business or other for-profit.

Other: None.

Abstract: Persons importing, exporting, and conducting international transactions with List I and List II chemicals must notify DEA of those transactions in advance of their occurrence, including information regarding the person(s) to whom the chemical will be transferred and the quantity to be transferred. For importations, persons must also provide return declarations, confirming the date of the importation and transfer, and the amounts of the chemical transferred. This information is used to prevent shipments not intended for legitimate purposes.

(5) *An estimate of the total number of respondents and the amount of time estimated for an average respondent to respond:*

	Number of respondents	Number of responses	Average time per response	Total hours
Form 486 (export)	239	7,945	0.2 hour (12 minutes)	1,589
Form 486 (export return declaration)	239	7,945	0.08 hour (5 minutes)	662.08
Form 486 (import)	230	2,348	0.25 hour (15 minutes)	587
Form 486 (import return declaration)*	230	2,583	0.08 hour (5 minutes)	215.2
Form 486 (international transaction)	9	111	0.2 hour (12 minutes)	22.2
Form 486 (international transaction return declaration)	9	111	0.08 hour (5 minutes)	9.25
Quarterly reports for imports of acetone, 2-butanone, and toluene.	110	440	0.5 hour (30 minutes)	220
Total	239			3,304.73

* DEA assumes 10% of all imports will not be transferred in the first thirty days and will necessitate submission of a subsequent return declaration.

(6) *An estimate of the total public burden (in hours) associated with the collection:* DEA estimates that this collection will take 3,305 hours annually.

If additional information is required, contact: Lynn Bryant, Department Clearance Officer, Information Management and Security Staff, Justice Management Division, U.S. Department of Justice, Patrick Henry Building, Suite 1600, 601 D Street NW., Washington, DC 20530.

Unfunded Mandates Reform Act of 1995

This rule will not result in the expenditure by State, local, and tribal governments, in the aggregate, or by the private sector, of $114,000,000 or more in any one year, and will not significantly or uniquely affect small governments. Therefore, no actions were deemed necessary under the provisions of the Unfunded Mandates Reform Act of 1995.

Congressional Review Act

This rule is not a major rule as defined by Section 804 of the Congressional Review Act/Small Business Regulatory Enforcement Fairness Act of 1996 (Congressional Review Act). This rule will not result in an annual effect on the economy of $100,000,000 or more; a major increase in cost or prices; or significant adverse effects on competition, employment, investment, productivity, innovation, or on the ability of United States-based companies to compete with foreign-based companies in domestic and export markets.

List of Subjects 21 CFR Part 1310

Drug traffic control, List I and List II chemicals, reporting requirements.

■ For the reasons set out above, 21 CFR Part 1310 is amended as follows:

PART 1310—RECORDS AND REPORTS OF LISTED CHEMICALS AND CERTAIN MACHINES

■ 1. The authority citation for part 1310 continues to read as follows:

Authority: 21 U.S.C. 802, 827(h), 830, 871(b), 890.

■ 2. Section 1310.02 is amended by adding a new paragraph (a)(28) to read as follows:

§ 1310.02 Substances covered.

* * * * *

(a) * * *

(28) N-phenethyl-4-piperidone (NPP)—8332.

* * * * *

■ 3. Section 1310.04 is amended by adding a new paragraph (g)(1)(vi) to read as follows:

§ 1310.04 Maintenance of records.

* * * * *

(g) * * *

(1) * * *

(vi) N-phenethyl-4-piperidone (NPP)

* * * * *

■ 4. Section 1310.09 is amended by adding new paragraph (h) to read as follows:

§ 1310.09 Temporary exemption from registration.

* * * * *

(h) Each person required under 21 U.S.C. 822 and 21 U.S.C. 957 to obtain a registration to manufacture, distribute, import, or export regulated N-phenethyl-4-piperidone (NPP), including regulated chemical mixtures pursuant to § 1310.12, is temporarily exempted from the registration requirement, provided that DEA receives a proper application for registration or application for exemption for a chemical mixture containing NPP pursuant to § 1310.13 on or before June 22, 2007. The exemption will remain in effect for each person who has made such application until the Administration has approved or denied that application. This exemption applies only to registration; all other chemical control requirements set forth in the Act and parts 1309, 1310, 1313, and 1316 of this chapter remain in full force and effect. Any person who manufactures, distributes, imports or exports a chemical mixture containing N-phenethyl-4-piperidone (NPP) whose application for exemption is subsequently denied by DEA must obtain a registration with DEA. A

temporary exemption from the registration requirement will also be provided for those persons whose application for exemption are denied, provided that DEA receives a properly completed application for registration on or before 30 days following the date of official DEA notification that the application for exemption has been denied. The temporary exemption for such persons will remain in effect until DEA takes final action on their registration application.

■ 5. Section 1310.12 is amended by adding in alphabetical order in the table in paragraph (c) an entry for ''N-phenethyl-4-piperidone (NPP)'' to read as follows:

§ 1310.12 Exempt chemical mixtures.

* * * * *

(c) * * *

TABLE OF CONCENTRATION LIMITS

	DEA chemical code No.	Concentration	Special conditions
*	*	*	*
N-phenethyl-4-piperidone (NPP)	8332	Not exempt at any concentration	Chemical mixtures containing any amount of NPP are not exempt.
*	*	*	*

* * * * *

Dated: April 11, 2007.

Michele M. Leonhart,

Deputy Administrator.

[FR Doc. 07–2015 Filed 4–20–07; 8:45 am]

BILLING CODE 4410–09–C

DEPARTMENT OF HOMELAND SECURITY

Coast Guard

33 CFR Part 100

[CGD13–07–013]

RIN 1625–AA00

Special Local Regulation: ULHRA Hydroplane Races, Columbia Park, Kennewick, WA

AGENCY: Coast Guard, DHS.

ACTION: Temporary final rule.

SUMMARY: The Coast Guard is establishing a temporary special local regulation for the ULHRA National Series Hydroplane Race to be held on the waters of the Columbia River in the vicinity of Columbia Park, Kennewick, WA. These special local regulations limit the movement of non-participating vessels in the regulated race area. This temporary rule is needed to provide for the safety of life on navigable waters during the event.

DATES: This regulation is effective from 7 a.m. to 7 p.m. on May 19 and 20, 2007.

ADDRESSES: Documents indicated in this preamble as being available in the docket are part of docket (CGD13–07–013) and are available for inspection or copying at U.S. Coast Guard MSO/Group Portland, 6767 N. Basin Avenue, Portland, Oregon 97217 between 7 a.m. and 4 p.m., Monday through Friday, except Federal holidays.

FOR FURTHER INFORMATION CONTACT: Petty Officer Michelle Duty, c/o Captain of the Port, Portland 6767 N. Basin Avenue, Portland, Oregon 97217, (503) 240–2590.

SUPPLEMENTARY INFORMATION:

Regulatory Information

We did not publish a notice of proposed rulemaking (NPRM) for this regulation. Under 5 U.S.C. 553(b)(B) and 5 U.S.C. 553 (d)(3), the Coast Guard finds that good cause exists for not publishing an NPRM and for making this rule effective less than 30 days after publication in the **Federal Register**. Publishing an NPRM would be contrary to public interest since immediate action is necessary to ensure the safety of vessels and spectators. If normal notice and comment procedures were followed, this rule would not become effective until after the date of the event. For this reason, following normal rulemaking procedures in this case would be impracticable and contrary to the public interest.

Background and Purpose

The Coast Guard is establishing a temporary special local regulation to allow for a safe racing event. This event occurs on the Columbia River in Lake Wallula in the vicinity of Columbia Park in Kennewick, WA and is scheduled to start at 7 a.m. and last until 7 p.m. on May 19 and 20, 2007. This event may result in a number of recreational vessels congregating near the hydroplane races. The hydroplane race poses several dangers to the public including excessive noise, objects falling from any accidents, and hydroplanes racing at high speeds in proximity to other vessels. Accordingly, the special local regulation is needed to protect watercraft and their occupants from safety hazards associated with the event. This special local regulation will be enforced by representatives of the Captain of the Port, Portland, Oregon. The Captain of the Port may be assisted by other federal, state, and local agencies.

Discussion of Rule

This temporary rule will create a regulated area to assist in minimizing the inherent dangers associated with hydroplane races. These dangers include, but are not limited to, excessive noise, race craft traveling at high speed in close proximity to one another and to spectator craft, and the risk of airborne objects from any accidents associated with hydroplanes. In the event that hydroplanes require emergency assistance, rescuers must have immediate and unencumbered access to the craft. The Coast Guard, through this action, intends to promote the safety of personnel, vessels, and facilities in the area. Due to these concerns, public safety requires these regulations to provide for the safety of life on the navigable waters.

Regulatory Evaluation

This temporary rule is not a ''significant regulatory action'' under section 3(f) of Executive Order 12866, Regulatory Planning and Review, and does not require an assessment of potential costs and benefits under section 6(a)(3) of that Order. The Office of Management and Budget has not reviewed it under that Order. It is not ''significant'' under the regulatory policies and procedures of the Department of Homeland Security (DHS).

We expect the economic impact of this temporary rule to be so minimal

that a full Regulatory Evaluation under the regulatory policies and procedures of DHS is unnecessary. This expectation is based on the fact that the regulated area established by this rule encompasses an area on the Columbia River near Columbia Park in Kennewick, WA not frequented by commercial navigation. The regulation is established for the benefit and safety of the recreational boating public, and any negative recreational boating impact is offset by the benefits of allowing the hydroplanes to race. This rule would be enforced from 7 a.m. to 7 p.m. each day on May 19 and 20, 2007. For the above reasons, the Coast Guard does not anticipate any significant economic impact.

Small Entities

Under the Regulatory Flexibility Act (5 U.S.C. 601–612), we have considered whether this rule would have a significant economic impact on a substantial number of small entities. The term ''small entities'' comprises small businesses, not-for-profit organizations that are independently owned and operated and are not dominant in their fields, and governmental jurisdictions with populations of less than 50,000.

The Coast Guard certifies under 5 U.S.C. 605(b) that this rule will not have a significant economic impact on a substantial number of small entities.

This rule will affect the following entities, some of which may be small entities: the owners or operators of vessels intending to transit or anchor in a portion of the Columbia River during the time mentioned under *Background and Purpose.* This special local regulation will not have a significant economic impact on a substantial number of small entities due to its short duration and small area. The only vessels likely to be impacted will be recreational boaters, small passenger vessel operators, and a ferry that runs through the regulated area twice a day. The event is held for the benefit and entertainment of those above categories. Because the impacts of this proposal are expected to be so minimal, the Coast Guard certifies under 605(b) of the Regulatory Flexibility Act (5 U.S.C. 601 *et seq.*) that this temporary rule will not have a significant economic impact on a substantial number of small entities.

If you think that your business, organization, or governmental jurisdiction qualifies as a small entity and that this temporary rule would have a significant economic impact on it, please submit a comment (see **ADDRESSES**) explaining why you think it qualifies and how and to what degree this rule would economically affect it.

Assistance for Small Entities

Under section 213(a) of the Small Business Regulatory Enforcement Fairness Act of 1996 (Pub. L. 104–121), we offered to assist small entities in understanding the rule so that they can better evaluate its effects on them and participate in the rulemaking process.

Small businesses may send comments on the actions of Federal employees who enforce, or otherwise determine compliance with, Federal regulations to the Small Business and Agriculture Regulatory Enforcement Ombudsman and the Regional Small Business Regulatory Fairness Boards. The Ombudsman evaluates these actions annually and rates each agency's responsiveness to small business. If you wish to comment on actions by employees of the Coast Guard, call 1–888–REG–FAIR (1–888–734–3247).

Collection of Information

This rule calls for no new collection of information under the Paperwork Reduction Act of 1995 (44 U.S.C. 3501–3520).

Federalism

A rule has implications for federalism under Executive Order 13132, Federalism, if it has a substantial direct effect on State or local governments and would either preempt State law or impose a substantial direct cost of compliance on them. We have analyzed this rule under that order and have determined that this rule does not have implications for federalism under that Order.

Unfunded Mandates Reform Act

The Unfunded Mandates Reform Act of 1995 (2 U.S.C. 1531–1538) requires Federal agencies to assess the effects of their discretionary regulatory actions. In particular, the Act addresses actions that may result in the expenditure by a State, local, or tribal government, in the aggregate, or by the private sector of $100,000,000 or more in any one year. Though this rule will not result in such an expenditure, we do discuss the effects of this rule elsewhere in this preamble.

Taking of Private Property

This rule will not effect taking of private property or otherwise have taking implications under Executive Order 12630, Governmental Actions and Interference with Constitutionally Protected Property Rights.

Civil Justice Reform

This rule meets applicable standards in sections 3(a) and 3(b)(2) of Executive Order 12988, Civil Justice Reform, to minimize litigation, eliminate ambiguity, and reduce burden.

Protection of Children

We have analyzed this rule under Executive Order 13045, Protection of Children from Environmental Health Risks and Safety Risks. This rule is not an economically significant rule and does not concern an environmental risk to health or risk to safety that may disproportionately affect children.

Indian Tribal Governments

This rule does not have tribal implications under Executive Order 13175, Consultation and Coordination with Indian tribal governments, because it does not have a substantial direct effect on one or more Indian tribes, on the relationship between the Federal Government and Indian tribes, or on the distribution of power and responsibilities between the Federal Government and Indian tribes.

Energy Effects

We have analyzed this rule under Executive Order 13211, Actions Concerning Regulations That Significantly Affect Energy Supply, Distribution, or Use. We have determined that it is not a ''significant energy action'' under that order because it is not a ''significant regulatory action'' under Executive Order 12866 and is not likely to have a significant adverse effect on the supply, distribution, or use of energy. The Administrator of the Office of Information and Regulatory Affairs has not designated it as a significant energy action. Therefore, it does not require a Statement of Energy Effects under Executive Order 13211.

Technical Standards

The National Technology Transfer and Advancement Act (NTTAA) (15 U.S.C. 272 note) directs agencies to use voluntary consensus standards in their regulatory activities unless the agency provides Congress, through the Office of Management and Budget, with an explanation of why using these standards would be inconsistent with applicable law or otherwise impractical. Voluntary consensus standards are technical standards (e.g., specifications of materials, performance, design, or operation; test methods; sampling procedures; and related management systems practices) that are developed or adopted by voluntary consensus standards bodies.

This rule does not use technical standards. Therefore, we did not consider the use of voluntary consensus standards.

Environment

We have analyzed this rule under Commandant Instruction M16475.1D and Department of Homeland Security Management Directive 5100.1, which guide the Coast Guard in complying with the National Environmental Policy Act of 1969 (NEPA) (42 U.S.C. 4321–4370f), and have concluded that there are no factors in this case that would limit the use of a categorical exclusion under section 2.B.2 of the Instruction. Therefore, this rule is categorically excluded, under figure 2–1, paragraph (34)(h) of Commandant Instruction M16475.1D, from further environmental documentation. Special local regulations issued in conjunction with a regatta or marine event permit are specifically excluded from further analysis and documentation under that section.

Under figure 2–1, paragraph (34)(h) of the instruction, an ''Environmental Analysis Check List'' and a categorical exclusion determination are not required for this rule.

List of Subjects in 33 CFR Part 100

Marine safety, Navigation (water), Reporting and record keeping requirements, Waterways.

■ For the reasons discussed in the preamble, the Coast Guard amends 33 CFR Part 100 as follows:

PART 100—SAFETY OF LIFE ON NAVIGABLE WATERS

■ 1. The authority citation for part 100 continues to read as follows:

Authority: 33 U.S.C. 1233.

■ 2. Add temporary § 100.T13–009 to read as follows:

§ 100.T13–009 ULHRA Hydroplane Races Columbia Park, Kennewick, WA.

(a) Regulated Area: The regulated area is defined as the waters of the Columbia River from bank to bank in the vicinity of Columbia Park on Lake Wallula in Kennewick, Washington commencing at the Interstate 395 Bridge and continuing up river 2.0 miles and terminating at the northern end of Hydro Island.

(b) Special Local Regulations. This event will take place from 7 a.m. to approximately 7 p.m. May 19–20, 2007, in the described waters of the Columbia River Kennewick, Washington.

(3) No persons may enter or remain in the regulated area except for participants in the event, supporting personnel, vessels registered with the event organizer, and personnel or vessels authorized by the Coast Guard Patrol Commander.

(4) The Coast Guard Patrol Commander is a commissioned, warrant, petty officer, or auxiliarist of the Coast Guard who has been designated by Commander, Coast Guard Sector Portland. A Coast Guard Auxiliarist, when so appointed by the COTP per 14 U.S.C. 831, may act as the Patrol Commander. The Patrol Commander is empowered to control movement of vessels in the regulated area and adjoining waters during the hours these regulations are in effect.

(5) A succession of sharp, short signals by whistle, siren, or horn from vessels patrolling the area shall serve as a signal to stop. Vessels or persons signaled shall stop and shall comply with the orders of the patrol vessels. Failure to due so may result in the expulsion from the area, citation, for failure to comply or both.

(6) Any spectator vessel may anchor outside the regulated area specified in paragraph (a)(1) of this section but, may not block a navigable channel.

Dated: April 6, 2007.

R.R. Houck,

Rear Admiral, U.S. Coast Guard Commander, 13th Coast Guard District.

[FR Doc. E7–7625 Filed 4–20–07; 8:45 am]

BILLING CODE 4910–15–P

DEPARTMENT OF HOMELAND SECURITY

Coast Guard

33 CFR Part 100

[COTP San Francisco Bay 07–009]

RIN 1625–AA08

Special Local Regulations for Marine Events; Opening Day on San Francisco Bay, Corinthian Yacht Club, San Francisco Bay, CA

AGENCY: Coast Guard, DHS.

ACTION: Notice of enforcement of regulation.

SUMMARY: The Coast Guard will enforce the special local regulations for the annual ''Opening Day on San Francisco Bay'' sponsored by the Pacific Inter-Club Yacht Association and Corinthian Yacht Club in the navigable waters of San Francisco Bay on April 29, 2007. This action is necessary to control vessel traffic and to ensure the safety of event participants and spectators during the parade of boats. During the enforcement period spectator vessels may not anchor, block, loiter, nor impede the through transit of participants or official patrol vessels within the area described during the event without permission from the Coast Guard Patrol Commander.

DATES: The regulations in 33 CFR 100.1103 will be enforced from 12 p.m. to 2 p.m. on April 29, 2007.

FOR FURTHER INFORMATION CONTACT: ENS Sheral Richardson, Waterways Management Branch, U.S. Coast Guard Sector San Francisco, at (415) 556–2950 extension 140.

SUPPLEMENTARY INFORMATION: The Coast Guard will enforce the special local regulations for the Opening Day on San Francisco Bay in 33 CFR 100.1103 on April 29, 2007 from 12 p.m. to 2 p.m. in the waters of San Francisco Bay, Crissy Fields, and near Pier 35.

The Coast Guard has granted the event sponsor a marine event permit for the waterfront festival. Under the provisions of 33 CFR 100.1103, spectator vessels may not anchor, block, loiter, nor impede the through transit of participants or official patrol vessels within the area described during the event without permission from the Coast Guard Patrol Commander. Vessels entering the ''Opening Day on San Francisco Bay'' regulated area shall follow the parade route established by the sponsor and be capable of maintaining an approximate speed of six (6) knots. The parade will be interrupted, as necessary, to permit the passage of commercial vessel traffic, which must cross the parade route at a no-wake speed and perpendicular to the parade route. The Coast Guard may be assisted by other Federal, State, or local law enforcement agencies in enforcing these regulations.

This notice is issued under authority of 33 CFR 100.1103 and 5 U.S.C. 552(a). In addition to this notice in the **Federal Register**, the maritime community will be provided advance notification of these events via a Broadcast Notice to Mariners. If the Captain of the Port determines that the regulated area need not be enforced for the full duration stated in this notice, he may use a Broadcast Notice to Mariners to grant general permission to enter the regulated area.

Dated: 12 April 2007.

W.J. Uberti,

Captain, U.S. Coast Guard, Captain of the Port, San Francisco.

[FR Doc. E7–7694 Filed 4–20–07; 8:45 am]

BILLING CODE 4910–15–P

DEPARTMENT OF HOMELAND SECURITY

Coast Guard

33 CFR Part 100

[COTP San Francisco Bay 07–008]

RIN 1625–AA08

Special Local Regulations for Marine Events; Blessing of the Fleet, Corinthian Yacht Club, San Francisco Bay, CA

AGENCY: Coast Guard, DHS.

ACTION: Notice of enforcement of regulation.

SUMMARY: The Coast Guard will enforce the special local regulations (SLR) for the annual ''Blessing of the Pleasure Craft Fleet'' sponsored by the Corinthian Yacht Club in the navigable waters of San Francisco Bay on April 29, 2007. This action is necessary to control vessel traffic and to ensure the safety of event participants and spectators during the formation and transit of vessels involved in the ceremonies. During the enforcement period spectator vessels may not anchor, block, loiter, nor impede the through transit of participants or official patrol vessels within the area described during the event without permission from the Coast Guard Patrol Commander.

DATES: The regulations in 33 CFR 100.1103 will be enforced from 8 a.m. to 12 p.m. on April 29, 2007.

FOR FURTHER INFORMATION CONTACT: ENS Sheral Richardson, Waterways Management Branch, U.S. Coast Guard Sector San Francisco, at (415) 556–2950 extension 140.

SUPPLEMENTARY INFORMATION: The Coast Guard will enforce the special local regulations for the Corinthian Yacht Club—Blessing of the Fleet in 33 CFR 100.1103 on April 29, 2007 from 8 a.m. to 12 p.m. in the waters of San Francisco Bay transiting the Raccoon Straits.

The Coast Guard has granted the event sponsor a marine event permit for the waterfront festival. Under the provisions of 33 CFR 100.1103, spectator vessels may not anchor, block, loiter, nor impede the through transit of participants or official patrol vessels within the area described during the event without permission from the Coast Guard Patrol Commander. The Coast Guard may be assisted by other Federal, State, or local law enforcement agencies in enforcing the SLR.

This notice is issued under authority of 33 CFR 100.1103 and 5 U.S.C. 552(a). In addition to this notice in the **Federal Register**, the maritime community will be provided advance notification of these events via a Broadcast Notice to Mariners. If the Captain of the Port determines that the regulated area need not be enforced for the full duration stated in this notice, he may use a Broadcast Notice to Mariners to grant general permission to enter the regulated area.

Dated: April 12, 2007.

W.J. Uberti,

Captain, U.S. Coast Guard, Captain of the Port, San Francisco.

[FR Doc. E7–7686 Filed 4–20–07; 8:45 am]

BILLING CODE 4910–15–P

DEPARTMENT OF HOMELAND SECURITY

Coast Guard

33 CFR Part 117

[CGD01–07–034]

Drawbridge Operation Regulations; Mill Neck Creek, Oyster Bay, NY

AGENCY: Coast Guard, DHS.

ACTION: Notice of temporary deviation from regulations; request for comments.

SUMMARY: The Commander, First Coast Guard District, has issued a temporary deviation from the regulation governing the operation of the Bayville Bridge, across Mill Neck Creek, mile 0.1, at Oyster Bay, New York. This deviation will test a change to the drawbridge operation schedule to determine whether a permanent change to the schedule is needed. Under this test deviation the bridge will open on signal after at least a two hour advance notice is given by calling the number posted at the bridge during the following periods: from May 25, 2007 through October 31, 2007, between 11 p.m. and 7 a.m.; from November 1, 2007 through November 20, 2007 on weekdays between 5 p.m. and 7 a.m., and on weekends. At all other times the bridge will open on signal.

DATES: This deviation is effective from May 25, 2007 through November 20, 2007. Comments must reach the Coast Guard on or before November 30, 2007.

ADDRESSES: You may mail comments and related material to Commander (dpb), First Coast Guard District Bridge Branch, One South Street, Battery Park Building, New York, New York, 10004, or deliver them to the same address between 7 a.m. and 3 p.m., Monday through Friday, except, Federal holidays. The First Coast Guard District, Bridge Branch, maintains the public docket for this deviation. Comments and material received from the public, as well as documents indicated in this notice as being available in the docket, will become part of this docket and will be available for inspection or copying at the First Coast Guard District, Bridge Branch, 7 a.m. to 3 p.m., Monday through Friday, except Federal holidays.

FOR FURTHER INFORMATION CONTACT: Judy Leung-Yee, Project Officer, First Coast Guard District, at (212) 668–7195.

SUPPLEMENTARY INFORMATION:

Request for Comments

We encourage you to participate in evaluating this test schedule by submitting comments or related material. If you do so, please include your name and address, identify the docket number for this deviation (CGD01–07–034), indicate the specific section of this document to which each comment applies, and give the reason for each comment. Please submit all comments and related material in an unbound format, no larger than 8½ by 11 inches, suitable for copying. If you would like to know if they reached us, please enclose a stamped, self-addressed postcard or envelope. We will consider all comments and material received during the comment period. Comments must be received by November 30, 2007.

Background and Purpose

The Bayville Bridge has a vertical clearance in the closed position of 9 feet at mean high water and 16 feet at mean low water. The existing drawbridge operation regulations listed at 33 CFR 117.5, require the bridge to open on signal at all times.

The bridge owner, County of Nassau, Department of Public Works, requested a change to the drawbridge operation regulations to help relieve the bridge owner from the burden of crewing the bridge during time periods when the bridge seldom receives requests to open.

Under this temporary deviation the Bayville Bridge at mile 0.1, across Mill Neck Creek, shall open on signal after at least a two hour advance notice is given by calling the number posted at the bridge during the following periods:

From May 25, 2007 through October 31, 2007, between 11 p.m. and 7 a.m.; From November 1, 2007 through November 20, 2007, on weekdays between 5 p.m. and 7 a.m., and on weekends.

At all other times, the bridge will open on signal per 33 CFR 117.5.

This deviation from the operating regulations is authorized under 33 CFR 117.35.

Dated: April 12, 2007.

Gary Kassof,

Bridge Program Manager, First Coast Guard District.

[FR Doc. E7–7667 Filed 4–20–07; 8:45 am]

BILLING CODE 4910–15–P

DEPARTMENT OF HOMELAND SECURITY

Coast Guard

33 CFR Part 165

[CGD05–07–038]

RIN 1625–AA00

Security Zone: Queen of England Visit, Jamestown Island, VA

AGENCY: Coast Guard, DHS.

ACTION: Temporary final rule.

SUMMARY: The United States Coast Guard is establishing a 500-yard security zone encompassing waters in the vicinity of Church Point on Jamestown Island, VA, for the Queen of England's visit to Jamestown Island, VA. This action is intended to restrict vessel traffic within the 500-yard security zone described herein. This security zone is necessary to protect attendees of this event from potential maritime hazards and threats, and to enhance public and maritime security.

DATES: This rule is effective from 8 a.m. on May 3, 2007, until 8 p.m. on May 4, 2007.

ADDRESSES: Documents indicated in this preamble as being available in the docket are part of docket CGD05–07–038 and are available for inspection or copying at USCG Sector Hampton Roads, 4000 Coast Guard Blvd., Portsmouth, Virginia, 23703, between 9:30 a.m. and 2 p.m., Monday through Friday, except Federal holidays.

FOR FURTHER INFORMATION CONTACT: LCDR Thomas Tarrants, Enforcement Branch Chief, U.S. Coast Guard Sector Hampton Roads, Virginia at (757) 483–8571.

SUPPLEMENTARY INFORMATION:

Regulatory Information

Pursuant to 5 U.S.C. 553(b)(B), a notice of proposed rulemaking (NPRM) was not published for this regulation. Good cause exists for not publishing a NPRM. Any delay encountered in this regulation's effective date by publishing an NPRM would be contrary to the public interest, since immediate action is needed to prevent mariners and vessels from entering waters within a 500-yard radius of 37–12.45N, 076–46.66W on Jamestown Island, VA, in order to provide for the security of this event and its attendees.

For the same reasons good cause exists for making this regulation effective less than 30 days after **Federal Register** publication under 5 U.S.C. 553(d)(3).

Background and Purpose

Following terrorist attacks on the United States in September 2001, there is now a heightened awareness that vessels or persons could engage in subversive activity against targets ashore in the United States. This regulation is necessary to protect the Queen of England's visit to Jamestown Island, VA, from potential maritime threats. This temporary security zone will only be in effect from 8 a.m. on May 3, 2007, until 8 p.m. on May 4, 2007. This zone will have minimal impact on vessel transits because vessels can safely transit around the zone and they are not precluded from using any portion of the waterway except the security zone area itself. Additionally, public notifications announcing this regulation will be made via marine information broadcasts prior to the zone taking effect.

Discussion of Rule

The Coast Guard is establishing a temporary security zone on specified waters to provide protection to the Queen of England and other dignitaries visiting Jamestown Island. The security zone is effective from 8 a.m. on May 3, 2007, until 8 p.m. on May 4, 2007. The security zone encompasses all waters off Jamestown Island, VA, within a 500-yard radius of Church Point at 37–12.45 N, 076–46.66 W. No persons or vessels may enter or remain in the regulated area without authorization by the Captain of the Port, Hampton Roads, or his designated representative.

Regulatory Evaluation

This rule is not a ''significant regulatory action'' under section 3(f) of Executive Order 12866, Regulatory Planning and Review, and does not require an assessment of potential costs and benefits under section 6(a)(3) of that Order. The Office of Management and Budget has not reviewed it under that Order. It is not ''significant'' under the regulatory policies and procedures of the Department of Homeland Security (DHS).

We expect the economic impact of this rule to be so minimal that a full regulatory evaluation under the regulatory policies and procedures of DHS is unnecessary. Although this rule restricts access to the regulated area, the effect of this rule will not be significant because: (i) The COTP may authorize access to the security zone; (ii) the security zone will be in effect for a limited duration; (iii) the Coast Guard will make notifications via maritime advisories so mariners can adjust their plans accordingly.

Small Entities

Under the Regulatory Flexibility Act (5 U.S.C. 601–612), we have considered whether this rule would have a significant economic impact on a substantial number of small entities. The term ''small entities'' comprises small businesses, not-for-profit organizations that are independently owned and operated and are not dominant in their fields, and governmental jurisdictions with populations of less than 50,000.

The Coast Guard certifies under 5 U.S.C. 605(b) that this rule will not have a significant economic impact on a substantial number of small entities.

However, this rule may affect the following entities, some of which may be small entities: the owners and operators of vessels intending to transit or anchor in the described portion of the security zone between 8 a.m. on May 3, 2007, to 8 p.m. on May 4, 2007. The security zone will not have a significant impact on a substantial number of small entities because the zone does not encompass a high vessel traffic area, and will only be in place for approximately 2-days. Maritime advisories will also be issued, so the mariners can adjust their plans accordingly.

Assistance for Small Entities

Under section 213(a) of the Small Business Regulatory Enforcement Fairness Act of 1996 (Pub. L. 104–121), we want to assist small entities in understanding this rule so that they can better evaluate its effects on them and participate in the rulemaking. If the rule would affect your small business, organization, or governmental jurisdiction and you have questions concerning its provisions or options for compliance, please contact LCDR Thomas Tarrants, Enforcement Branch Chief, U.S. Coast Guard Sector Hampton Roads, Virginia at (757) 483–8571.

Small businesses may send comments on the actions of Federal employees who enforce, or otherwise determine compliance with, Federal regulations to the Small Business and Agriculture Regulatory Enforcement Ombudsman and Regional Small Business Regulatory Fairness Boards. The Ombudsman evaluates these actions annually and rates each agency's responsiveness to small business. If you wish to comment on actions by employees of the U.S.

Coast Guard, call 1–888–REG–FAIR (1–888–734–3247).

Collection of Information

This rule calls for no new collection of information under the Paperwork Reduction Act of 1995 (44 U.S.C. 3501–3520).

Federalism

A rule has implications for federalism under Executive Order 13132, Federalism, if it has a substantial direct effect on State or local governments and would either preempt State law or impose a substantial direct cost of compliance on them. We have analyzed this rule under that Order and have determined that it does not have implications for federalism.

Unfunded Mandates Reform Act

The Unfunded Mandates Reform Act of 1995 (2 U.S.C. 1531–1538) requires Federal agencies to assess the effects of their discretionary regulatory actions. In particular, the Act addresses actions that may result in the expenditure by a State, local, or tribal government, in the aggregate, or by the private sector of $100,000,000 or more in any one year. Though this rule will not result in such expenditure, we do discuss the effects of this rule elsewhere in this preamble.

Taking of Private Property

This rule will not effect a taking of private property or otherwise have taking implications under Executive Order 12630, Governmental Actions and Interference with Constitutionally Protected Property Rights.

Civil Justice Reform

This rule meets applicable standards in sections 3(a) and 3(b)(2) of Executive Order 12988, Civil Justice Reform, to minimize litigation, eliminate ambiguity, and reduce burden.

Protection of Children

We have analyzed this rule under Executive Order 13045, Protection of Children from Environmental Health Risks and Safety Risks. This rule is not an economically significant rule and does not create an environmental risk to health or risk to safety that may disproportionately affect children.

Indian Tribal Governments

This rule does not have tribal implications under Executive Order 13175, Consultation and Coordination with Indian Tribal Governments, because it does not have a substantial direct effect on one or more Indian tribes, on the relationship between the Federal Government and Indian tribes, or on the distribution of power and responsibilities between the Federal Government and Indian tribes.

Energy Effects

We have analyzed this rule under Executive Order 13211, Actions Concerning Regulations That Significantly Affect Energy Supply, Distribution, or Use. We have determined that it is not a ''significant energy action'' under that order because it is not a ''significant regulatory action'' under Executive Order 12866 and is not likely to have a significant adverse effect on the supply, distribution, or use of energy. It has not been designated by the Administrator of the Office of Information and Regulatory Affairs as a significant energy action. Therefore, it does not require a Statement of Energy Effects under Executive Order 13211.

Technical Standards

The National Technology Transfer and Advancement Act (NTTAA) (15 U.S.C. 272 note) directs agencies to use voluntary consensus standards in their regulatory activities unless the agency provides Congress, through the Office of Management and Budget, with an explanation of why using these standards would be inconsistent with applicable law or otherwise impractical. Voluntary consensus standards are technical standards (*e.g.*, specifications of materials, performance, design, or operation; test methods; sampling procedures; and related management systems practices) that are developed or adopted by voluntary consensus standards bodies. This rule does not use technical standards. Therefore, we did not consider the use of voluntary consensus standards.

Environment

We have analyzed this rule under Commandant Instruction M16475.1D, which guides the Coast Guard in complying with the National Environmental Policy Act of 1969 (NEPA) (42 U.S.C. 4321–4370f), and have concluded that there are no factors in this case that would limit the use of a categorical exclusion under section 2.B.2 of the Instruction. Therefore, this rule is categorically excluded, under figure 2–1, paragraph (34)(g), of the Instruction, from further environmental documentation. Under figure 2–1, paragraph 34(g) of the Instruction, an ''Environmental Analysis Check List'' and a ''Categorical Exclusion Determination'' are not required for this rule because it concerns an emergency situation of less than 1 week in duration.

List of Subjects in 33 CFR Part 165

Harbors, Marine safety, Navigation (water), Reporting & recordkeeping requirements, Security measures, Waterways.

■ For the reasons discussed in the preamble, the Coast Guard amends 33 CFR part 165 subpart D as follows:

PART 165—REGULATED NAVIGATION AREAS AND LIMITED ACCESS AREAS

■ 1. The authority citation for part 165 continues to read as follows:

Authority: 33 U.S.C. 1226, 1231; 46 U.S.C. Chapter 701; 50 U.S.C. 191,195; 33 CFR 1.05–1(g), 6.04–1, 6.04–6, and 160.5; Pub. L. 107–295, 116 Stat. 2064; Department of Homeland Security Delegation No. 0170.1.

■ 2. Add temporary § 165.T07–038, to read as follows:

§ 165.T07–038 Security Zone: Jamestown Island, VA.

(a) *Location.* The following area is a security zone: All waters within a 500-yard radius of Church Point at 37–12.45 N, 076–46.66 W on Jamestown Island, VA.

(b) *Definition.* As used in this section, *Captain of the Port representative* means any U.S. Coast Guard commissioned, warrant or petty officer who has been authorized by the Captain of the Port, Hampton Roads, Virginia to act on his behalf.

(c) *Regulation.* (1) In accordance with the general regulations in 165.30 of this part, entry into this zone is prohibited unless authorized by the Captain of the Port, Hampton Roads, Virginia, or his designated representative.

(2) The operator of any vessel in the immediate vicinity of this security zone shall:

(i) Stop the vessel immediately upon being directed to do so by any commissioned, warrant or petty officer on board a vessel displaying a U.S. Coast Guard Ensign.

(ii) Proceed as directed by any commissioned, warrant or petty officer on board a vessel displaying a U.S. Coast Guard Ensign.

(3) The Captain of the Port, Hampton Roads, Virginia can be contacted at telephone number (757) 668–5555.

(4) U.S. Coast Guard vessels enforcing the security zone can be contacted on VHF–FM marine band radio, channel 13 (156.65 MHz) and channel 16 (156.8 MHz).

(d) *Enforcement period.* This regulation will be enforced from 8 a.m. to 8 p.m. on May 3, 2007, and from 8 a.m. until 8 p.m. on May 4, 2007.

(e) *Effective period.* This regulation is effective from 8 a.m. to on May 3, 2007, until 8 p.m. on May 4, 2007.

Dated: April 6, 2007.

Patrick B. Trapp,

Captain, U.S. Coast Guard, Captain of the Port, Hampton Roads.

[FR Doc. E7–7670 Filed 4–20–07; 8:45 am]

BILLING CODE 4910–15–P

DEPARTMENT OF HOMELAND SECURITY

Coast Guard

33 CFR Part 165

[CGD05–07–015]

RIN 1625–AA00

Security Zone: America's 400th Celebration, Jamestown, VA

AGENCY: Coast Guard, DHS.

ACTION: Temporary final rule.

SUMMARY: The United States Coast Guard is establishing a security zone encompassing waters within 2-nautical miles of Church Point at 37–12.45N, 076–46.66W, Jamestown Island, VA, for America's 400th Anniversary celebration. This action is intended to restrict vessel traffic within the security zone. This security zone is necessary to protect attendees of this event from potential maritime hazards and threats and enhance public and maritime security.

DATES: This rule is effective from 3 p.m. on May 11, 2007 until 10 p.m. on May 13, 2007.

ADDRESSES: Documents indicated in this preamble as being available in the docket are part of docket CGD05–07–015 and are available for inspection or copying at USCG Sector Hampton Roads, 4000 Coast Guard Blvd., Portsmouth, Virginia 23703, between 9:30 a.m. and 2 p.m., Monday through Friday, except Federal holidays.

FOR FURTHER INFORMATION CONTACT: LCDR Thomas Tarrants, Enforcement Branch Chief, U.S. Coast Guard Sector Hampton Roads, Virginia at (757) 483–8571.

SUPPLEMENTARY INFORMATION:

Regulatory Information

On March 12, 2007, we published a notice of proposed rulemaking (NPRM) entitled ''Security Zone: America's 400th Celebration, Jamestown, VA,'' in the **Federal Register** (72 FR 10958). We received no letters commenting on the proposed rule. No public hearing was requested, and none was held.

Background and Purpose

Following terrorist attacks on the United States in September 2001, there is now a heightened awareness that vessels or persons could engage in subversive activity against targets ashore in the United States. This regulation is necessary to protect attendees of America's 400th Anniversary celebration on Jamestown Island, VA, from potential maritime threats. This temporary security zone will only be in effect from 3 p.m. on May 11, 2007 until 10 p.m. on May 13th, 2007. This zone will have minimal impact on vessel transits because vessels can request authorization from the Captain of the Port (COTP) to safely transit through the zone and they are not precluded from using any portion of the waterway except the security zone area itself. Additionally, public notifications announcing this regulation will be made via marine information broadcasts prior to the zone taking effect.

Discussion of Comments and Changes

The Coast Guard received no comments from the public regarding the Notice of Proposed Rulemaking. As no public comments were received, no changes were made to the Notice of Proposed Rulemaking.

Discussion of Rule

The Coast Guard is establishing a temporary security zone on specified waters to provide protection to dignitaries visiting Jamestown Island. The security zone will be effective from 3 p.m. on May 11, 2007, until 10 p.m. on May 13, 2007. The security zone will be enforced from 3 p.m. until 10 p.m. on May 11, 2007; from 9 a.m. to 11 p.m. on May 12, 2007; and from 9 a.m. to 10 p.m. on May 13, 2007.

The security zone will encompass all waters around Jamestown Island, VA within a 2-nautical mile radius of Church Point at 37–12.45N, 076–46.66W. No persons or vessels may enter or remain in the regulated area without authorization by the Captain of the Port, Hampton Roads, or his designated representative.

Regulatory Evaluation

This rule is not a ''significant regulatory action'' under section 3(f) of Executive Order 12866, Regulatory Planning and Review, and does not require an assessment of potential costs and benefits under section 6(a)(3) of that Order. The Office of Management and Budget has not reviewed it under that Order. It is not ''significant'' under the regulatory policies and procedures of the Department of Homeland Security (DHS).

We expect the economic impact of this rule to be so minimal that a full regulatory evaluation under the regulatory policies and procedures of DHS is unnecessary. Although this rulemaking restricts access to the regulated area, the effect of this rulemaking will not be significant because: (i) The COTP may authorize access to the security zone; (ii) the security zone will be in effect for a limited duration; (iii) the Coast Guard will make notifications via maritime advisories so mariners can adjust their plans accordingly.

Small Entities

Under the Regulatory Flexibility Act (5 U.S.C. 601–612), we have considered whether this rule would have a significant economic impact on a substantial number of small entities. The term ''small entities'' comprises small businesses, not-for-profit organizations that are independently owned and operated and are not dominant in their fields, and governmental jurisdictions with populations of less than 50,000.

The Coast Guard certifies under 5 U.S.C. 605(b) that this rule will not have a significant economic impact on a substantial number of small entities.

However, this rule may affect the following entities, some of which may be small entities: the owners and operators of vessels intending to transit or anchor in the described portion of the security zone between 3 p.m. on May 11, 2007, to 10 p.m. on May 13, 2007. The security zone will not have a significant impact on a substantial number of small entities because the zone does not encompass a high vessel traffic area, and vessels can request authorization from the COTP to enter the zone. Maritime advisories will also be issued, so the mariners can adjust their plans accordingly.

Assistance for Small Entities

Under section 213(a) of the Small Business Regulatory Enforcement Fairness Act of 1996 (Pub. L. 104–121), we want to assist small entities in understanding this rule so that they can better evaluate its effects on them and participate in the rulemaking. If the rulemaking would affect your small business, organization, or governmental jurisdiction and you have questions concerning its provisions or options for compliance, please contact LCDR Thomas Tarrants, Enforcement Branch Chief, U.S. Coast Guard Sector Hampton Roads, Virginia at (757) 483–8571.

Small businesses may send comments on the actions of Federal employees who enforce, or otherwise determine compliance with, Federal regulations to the Small Business and Agriculture Regulatory Enforcement Ombudsman

and Regional Small Business Regulatory Fairness Boards. The Ombudsman evaluates these actions annually and rates each agency's responsiveness to small business. If you wish to comment on actions by employees of the U.S. Coast Guard, call 1–888–REG–FAIR (1–888–734–3247).

Collection of Information

This rule calls for no new collection of information under the Paperwork Reduction Act of 1995 (44 U.S.C. 3501–3520).

Federalism

A rule has implications for federalism under Executive Order 13132, Federalism, if it has a substantial direct effect on State or local governments and would either preempt State law or impose a substantial direct cost of compliance on them. We have analyzed this rule under that Order and have determined that it does not have implications for federalism.

Unfunded Mandates Reform Act

The Unfunded Mandates Reform Act of 1995 (2 U.S.C. 1531–1538) requires Federal agencies to assess the effects of their discretionary regulatory actions. In particular, the Act addresses actions that may result in the expenditure by a State, local, or tribal government, in the aggregate, or by the private sector of $100,000,000 or more in any one year. Though this rule will not result in such expenditure, we do discuss the effects of this rule elsewhere in this preamble.

Taking of Private Property

This rule will not affect a taking of private property or otherwise have taking implications under Executive Order 12630, Governmental Actions and Interference with Constitutionally Protected Property Rights.

Civil Justice Reform

This rule meets applicable standards in sections 3(a) and 3(b)(2) of Executive Order 12988, Civil Justice Reform, to minimize litigation, eliminate ambiguity, and reduce burden.

Protection of Children

We have analyzed this rule under Executive Order 13045, Protection of Children from Environmental Health Risks and Safety Risks. This rule is not an economically significant rule and does not create an environmental risk to health or risk to safety that may disproportionately affect children.

Indian Tribal Governments

This rule does not have tribal implications under Executive Order 13175, Consultation and Coordination with Indian Tribal Governments, because it does not have a substantial direct effect on one or more Indian tribes, on the relationship between the Federal Government and Indian tribes, or on the distribution of power and responsibilities between the Federal Government and Indian tribes.

Energy Effects

We have analyzed this rule under Executive Order 13211, Actions Concerning Regulations That Significantly Affect Energy Supply, Distribution, or Use. We have determined that it is not a ''significant energy action'' under that order because it is not a ''significant regulatory action'' under Executive Order 12866 and is not likely to have a significant adverse effect on the supply, distribution, or use of energy. It has not been designated by the Administrator of the Office of Information and Regulatory Affairs as a significant energy action. Therefore, it does not require a Statement of Energy Effects under Executive Order 13211.

Technical Standards

The National Technology Transfer and Advancement Act (NTTAA) (15 U.S.C. 272 note) directs agencies to use voluntary consensus standards in their regulatory activities unless the agency provides Congress, through the Office of Management and Budget, with an explanation of why using these standards would be inconsistent with applicable law or otherwise impractical. Voluntary consensus standards are technical standards (e.g., specifications of materials, performance, design, or operation; test methods; sampling procedures; and related management systems practices) that are developed or adopted by voluntary consensus standards bodies. This rule does not use technical standards. Therefore, we did not consider the use of voluntary consensus standards.

Environment

We have analyzed this rule under Commandant Instruction M16475.1D and Department of Homeland Security Management Directive 5100.1, which guide the Coast Guard in complying with the National Environmental Policy Act of 1969 (NEPA) (42 U.S.C. 4321–4370f), and have concluded that there are no factors in this case that would limit the use of a categorical exclusion under section 2.B.2 of the Instruction. Therefore, we believe that this rule should be categorically excluded, under figure 2–1, paragraph (34)(g), of the Instruction, from further environmental documentation. A final ''Environmental Analysis Check List'' and a final ''Categorical Exclusion Determination'' will be available in the docket where indicated under **ADDRESSES**.

List of Subjects in 33 CFR Part 165

Harbors, Marine safety, Navigation (water), Reporting & recordkeeping requirements, Security measures, Waterways.

■ For the reasons discussed in the preamble, the Coast Guard proposes to amend 33 CFR part 165 subpart D as follows:

PART 165—REGULATED NAVIGATION AREAS AND LIMITED ACCESS AREAS

■ 1. The authority citation for part 165 continues to read as follows:

Authority: 33 U.S.C. 1226, 1231; 46 U.S.C. Chapter 701; 50 U.S.C. 191, 195; 33 CFR 1.05–1(g), 6.04–1, 6.04–6, and 160.5; Pub.L. 107–295, 116 Stat. 2064; Department of Homeland Security Delegation No. 0170.1.

■ 2. Add temporary § 165.T05–015, to read as follows:

§ 165.T05–015 Security Zone: Jamestown Island, VA.

(a) *Location*. The following area is a security zone: All waters within a 2-nautical mile radius of Church Point at 37–12.45N, 076–46.66W on Jamestown Island, VA.

(b) *Definition*. As used in this section; *Designated representative* means any U.S. Coast Guard commissioned, warrant or petty officer who has been authorized by the Captain of the Port, Hampton Roads, Virginia to act on his behalf.

(c) *Regulation*. (1) In accordance with the general regulations in 165.33 of this part, entry into this zone as described in paragraph (a) is prohibited unless authorized by the Captain of the Port, Hampton Roads, Virginia, or his designated representative.

(2) The operator of any vessel in the immediate vicinity of this security zone shall:

(i) Stop the vessel immediately upon being directed to do so by the Captain of the Port, Hampton Roads, Virginia, or his designated representative on board a vessel displaying a U.S. Coast Guard Ensign.

(ii) Proceed as directed by the Captain of the Port, Hampton Roads, Virginia, or his designated representative on board a vessel displaying a U.S. Coast Guard Ensign.

(3) The Captain of the Port, Hampton Roads, Virginia can be contacted at telephone number (757) 668–5555.

(4) U.S. Coast Guard vessels enforcing the security zone can be contacted on VHF–FM marine band radio, channel 13

(156.65 MHz) and channel 16 (156.8 MHz).

(d) *Enforcement period*. The security zone will be enforced from 3 p.m. until 10 p.m. on May 11, 2007; from 9 a.m. to 11 p.m. on May 12, 2007; and from 9 a.m. to 10 p.m. on May 13, 2007.

(e) *Effective period*. This regulation is effective from 3 p.m. on May 11, 2007, to 10 p.m. on May 13, 2007.

Dated: April 6, 2007.

Patrick B. Trapp,

Captain, U.S. Coast Guard, Captain of the Port, Hampton Roads.

[FR Doc. E7–7669 Filed 4–20–07; 8:45 am]

BILLING CODE 4910–15–P

DEPARTMENT OF TRANSPORTATION

Pipeline and Hazardous Materials Safety Administration

49 CFR Part 192

[Docket No. PHMSA–2005–22642]

RIN 2137–AE09

Pipeline Safety: Design and Construction Standards To Reduce Internal Corrosion in Gas Transmission Pipelines

AGENCY: Pipeline and Hazardous Materials Safety Administration (PHMSA), Department of Transportation.

ACTION: Final rule.

SUMMARY: This final rule requires operators to use design and construction features in new and replaced gas transmission pipelines to reduce the risk of internal corrosion. The design and construction features required by this rule will reduce the risk of internal corrosion and related pipeline failures by reducing the potential for accumulation of liquids and facilitating operation and maintenance practices that address internal corrosion.

DATES: This final rule takes effect May 23, 2007.

FOR FURTHER INFORMATION CONTACT: Barbara Betsock by phone at (202) 366–4361, by fax at (202) 366–4566, or by e-mail at *barbara.betsock@dot.gov.*

SUPPLEMENTARY INFORMATION:

Background

We initiated this rulemaking proceeding in response to a 2003 recommendation of the National Transportation Safety Board (NTSB) and corresponding advice of the Technical Pipeline Safety Standards Committee (TPSSC). The NTSB recommendation arose out of its investigation of the August 19, 2000 gas transmission pipeline explosion near Carlsbad, New Mexico in which 12 people were killed. In its accident investigation report, PAR–03–01, issued February 11, 2003, the NTSB concluded that the immediate cause of the Carlsbad pipeline failure was severe internal corrosion. The NTSB recommended that PHMSA (1) require that new and replaced gas transmission pipelines be designed and constructed with features to mitigate internal corrosion; (2) require operators to ensure that their internal corrosion control programs address water and other contaminants in the corrosion process; and (3) change its Federal inspection to ensure adequate assessments of pipeline operator safety programs. In 2004 and 2005, the NTSB closed as acceptable PHMSA actions to respond to the second and third recommendations. This rulemaking proceeding responds to the first recommendation.

On December 15, 2005, PHMSA published a notice of proposed rulemaking (NPRM) in the **Federal Register** (70 FR 74262) proposing to require operators to use design and construction features to reduce the risk of internal corrosion in transmission pipelines. As we explained in the NPRM, the proposed rule was intended to prevent the risk of internal corrosion by applying knowledge and experience about the causes and prevention of corrosion to design of pipelines. The incorporation of design features to address internal corrosion improves the ability of the operator to prevent internal corrosion and facilitates maintenance activities to control internal corrosion.

The basic requirements of this final rule are similar to those proposed in the NPRM. New and replaced gas transmission pipelines must be configured to reduce the risk that liquids will collect in the line; have effective liquid removal features; and allow use of corrosion monitoring devices in locations with significant potential for internal corrosion. When an operator changes the configuration of a pipeline, the operator must consider and address the impact the changes will have on the risk of internal corrosion in an existing downstream pipeline. This final rule does not supersede or negate the requirement to address internal corrosion during operation and maintenance activities. Designing and building a pipeline in accordance with the final rule will not prevent internal corrosion unless the operator also follows a well-planned maintenance program. For example, incorporating equipment to measure gas quality will not prevent internal corrosion unless it is used and the operator acts on the results.

Advisory Committee Consideration

PHMSA briefed the TPSSC in June 2005 and considered the Committee's advice in developing the NPRM. PHMSA presented the NPRM and regulatory evaluation to the TPSSC for formal consideration at their meeting on June 28, 2006. At that meeting, members expressed concern that the proposed documentation requirements were burdensome. TPSSC members asked for information about whether PHMSA intended to require detailed documentation of every action taken during design and construction; what alternatives commenters suggested; and how the NTSB reached its recommendation. PHMSA provided additional information in the form of a concept paper on the documentation needed for compliance, an expanded summary of comments, and excerpts from the NTSB report on the Carlsbad incident. PHMSA briefed the TPSSC at a meeting on August 26, 2006 and outlined changes we intended to make in response to comments. A few members expressed individual concerns about particular issues. These concerns are addressed in the remainder of this preamble. The TPSSC voted unanimously to support the NPRM as technically feasible, reasonable, cost-effective and practicable, provided the final rule included the changes PHMSA outlined at the meeting. In addition, the TPSSC advised PHMSA to hold discussions in an open forum on enforcement criteria, including protocol development and recordkeeping. The final rule is consistent with the discussion at the TPSSC meeting. In accordance with the TPSSC's advice, PHMSA intends to convene an open forum soon after the final rule is issued.

Comments on the NPRM

PHMSA received public comments on the NPRM from 18 commenters, 13 of them operators of gas transmission pipelines. The Gas Piping Technology Committee, Interstate Natural Gas Association of America, American Gas Association, the Texas Pipeline Association, and the Iowa Utilities Board also commented. Commenters agreed with the basic concept of the proposal—addressing internal corrosion risks during design and construction. Most commenters viewed the documentation requirements of the proposed rule as burdensome. Some expressed confusion about what an operator would have to do to comply. As an example, some questioned

whether the proposed rule would require an operator to conduct an engineering analysis to justify variations in elevation due to following the contours of the land. PHMSA has revised the rule text to clarify the final rule and refine the documentation requirements to ensure compliance without excessive burden. We discuss the major comments and how we are addressing them more specifically in the following paragraphs.

Redundancy

Some commenters contend existing regulations in 49 CFR part 192 make this rulemaking redundant and unnecessary. These commenters point to regulations requiring operators to design new pipeline to allow the use of instrumented internal inspection devices (§ 192.150); to check for internal corrosion when pipe is removed (§ 192.475); to maintain continuing surveillance (§ 192.613); and to develop integrity management programs addressing internal corrosion (subpart O). However, none of the regulations cited by commenters squarely addresses the goals of this rulemaking and the NTSB recommendation.

The purpose of § 192.150 is to allow internal inspection to address a variety of pipeline risks. Section 192.150 incidentally aids internal corrosion control because a pipeline designed to allow internal inspection can also accommodate cleaning pigs. Cleaning pigs remove liquids and contaminants from a pipeline as part of corrosion control. In its report on the 2000 Carlsbad incident, the NTSB recognized the value of cleaning pigs and their limitations in addressing the internal corrosion issues in the Carlsbad incident.[1] The NTSB recommended additional regulation to require design features focused on internal corrosion. In addition, unlike this final rule, § 192.150 does not apply to gathering lines.

The regulations requiring an operator to check line pipe removed from a pipeline for signs of internal corrosion (§ 192.475) and to maintain continuing surveillance (§ 192.613) are not design requirements. These regulations are among those operation and maintenance regulations requiring operators to monitor their pipelines and collect and analyze information about safety risks. But these practices usually only enable operators to detect signs of corrosion. The actions recommended by the NTSB and addressed in this final rule reduce the risk that internal corrosion will even initiate by designing and constructing pipelines to reduce that risk in the first place. Requiring operators to design their systems to reduce the risk of internal corrosion neither duplicates nor obviates the need to detect and monitor internal corrosion.

Some commenters said the proposed rule did not take into account the internal corrosion management plans required by the integrity management regulations (subpart O). In fact, we believe that the final rule will complement the existing requirements under subpart O. Subpart O applies only to pipelines in high consequence areas (HCAs). In those areas, it supplements the safety protection provided by the minimum standards. This final rule sets a minimum standard for design and construction applicable to all onshore pipelines, regardless of location. For pipeline in an HCA, compliance with the new standard will facilitate addressing the risk of internal corrosion under an integrity management program. For example, § 192.927(c)(4) requires an operator to continually monitor covered segments where internal corrosion has been identified. A segment constructed in accordance with this final rule will have liquid removal features and allow the use of appropriate monitoring devices.

Exceptions Based on What the Operator Expects To Occur During Operations

Many commenters requested an exception to the design and construction requirements if the operator believes liquids will not pose a problem in the line. Commenters suggested several variations. Some commenters suggested that we establish an exception applicable if the operator confirms liquids will not present an uncontrolled threat (presumably because of planned corrosion control activities). Others suggested requiring design and construction features only where corrosive gas is transported. Others pointed to areas without a history of internal corrosion and suggested that the rule should not apply to pipelines installed in these areas.

PHMSA does not agree with the suggestions of these commenters and, accordingly, is not establishing exceptions to design and construction requirements based on expected operations. An operator needs to include internal corrosion control measures in operation and maintenance programs. Relying on these operation and maintenance programs alone to control internal corrosion misses the safety and economic benefit from good design. Building features to reduce the risk of corrosion into new pipelines costs little and provides additional and fuller protection against internal corrosion. Even where operators do not expect to have liquids enter the pipeline, one commenter noted that an operator cannot rule out upset conditions which can result in the introduction of liquids. These can occur when there is an operational error; tertiary recovery introduces liquids; gas comes from a new or different area of the same field; gas from a different operator joins the gas stream; equipment fails; or other causes. The increased risk of internal corrosion such a situation causes, albeit possibly small, justifies the minimal incremental cost of incorporating the measures required in the final rule. However, in the interest of cost effectiveness, PHMSA agrees with the need to provide operators flexibility to select design and construction options fitting the relative risks that there will be liquids in the pipeline in the future.

Exceptions for Particular Types of Facilities

A few commenters requested that PHMSA carve out exceptions to the final rule for particular types of pipeline facilities. We address these comments in the following paragraphs, by reference to the particular pipeline facilities in issue.

Offshore pipelines. The Interstate Natural Gas Association of America and one large gas transmission operator requested that PHMSA carve out an exception for offshore lines. Among the reasons given were the lower risk to public safety in the offshore environment and the impossibility of engineering out the effects of dips and low spots offshore. PHMSA agrees that offshore lines should be excepted from the final rule.

Although there have been serious gas incidents offshore, these have been caused by outside force damage sufficient to rupture the pipeline, such as an anchor dragging or vessel

[1] From NTSB report PAR 03–01:

The Safety Board concludes that, as a likely result of the partial clogging of the drip upstream of the rupture location, some liquids bypassed the drip, continued through the pipeline, and accumulated and caused corrosion at the eventual rupture site where pipe bending had created a low point in the pipeline.

Periodic use of cleaning pigs can remove water and other liquid and solid contaminants from a pipeline. One of the considerations for the design and construction of a cleaning pig system is to make provisions for effective collection and removal of the accumulated materials from the pipeline after pigging [* * *]

[* * *] The Safety Board therefore concludes that if the accident section of pipeline 1103 had been able to accommodate cleaning pigs, and if cleaning pigs had been used regularly with the resulting liquids and solids thoroughly removed from the pipeline after each pig run, the internal corrosion that developed in this section of pipe would likely have been less severe.

grounding. This sort of damage includes sources of ignition from vessels passing overhead. In contrast, a corrosion leak in an offshore gas pipeline poses less risk to people. Unless corrosion is widespread, a corrosion failure is likely to leak rather than rupture and is not likely to pose a threat to people. It is highly unlikely that a vessel would pass over the underwater pipeline at the moment of rupture and provide both a source of ignition triggering a fire and people to be killed or injured. Between 2000 and 2005, there were more than twice as many internal corrosion incidents offshore as onshore, but less damage, even though damage includes the cost of lost gas and repair to the underwater pipeline. There have been no injuries or fatalities.[2]

Finally, as noted by the commenters, there are more limited design and construction options available for offshore pipelines. Pipelines commonly follow the contours of the seabed with its natural low points. Installing and operating liquid removal equipment is not possible at low points in deep water. Some new pipelines are being installed in water more than one mile deep, complicating the under water pipeline design process. Control of liquids in the gas stream is already a critical factor in deep water pipeline construction and operation.

Moreover, adopting this exception will not leave offshore pipelines unprotected or allow an operator to ignore the risk of internal corrosion. Existing regulations in subparts I and L require operators of offshore pipelines to address internal corrosion during operation and maintenance.

Gathering lines. The only regulated gas gathering lines are those in populated areas, where the risk of injury or property damage in the event of failure is greatest. By their very nature, gathering lines regularly transport gas containing liquids—a combination known to cause corrosion over time. Approximately a third of onshore incidents caused by internal corrosion involve gathering lines.[3] None of the commenters challenged these basic facts. PHMSA does not except gathering lines from this final rule.

At least one commenter suggested that gathering lines were not within the scope of the NPRM in this rulemaking. That is not the case. When PHMSA issued the NPRM in December 2005, gas gathering lines in non-rural areas were subject to the same regulations applicable to transmission pipelines (49 CFR 192.9 (2005)). The only exceptions were the requirement that new pipelines accommodate internal inspection devices (§ 192.150) and integrity management regulations (subpart O). PHMSA published a Supplemental Notice of Proposed Rulemaking (SNPRM) proposing changes to regulation of gathering lines on October 3, 2005 (70 FR 57536). The SNPRM on gathering lines proposed to continue to subject gathering lines to most regulations applicable to transmission pipelines, including both corrosion control and design and construction requirements. The final rule on gathering lines continued to subject gathering lines to corrosion control and design and construction requirements such as this final rule (71 FR 13289; March 15, 2006).

Compressor stations. PHMSA is not persuaded that the final rule should except compressor stations. The commenter suggesting an exception did not offer a reason, and we cannot discern one. Compressors do not operate well when liquids are present in the gas flow. Actions to remove liquid before it enters the compressor may result in liquid accumulation in the compressor station piping. About forty percent of the damage caused by internal corrosion onshore incidents between 2000 and 2005 was due to incidents at compressor stations. People work in compressor stations. They also live near compressor stations, particularly in suburban locations in which there has been significant development since the transmission pipelines were constructed.

Placement Within 49 CFR Part 192

Several commenters suggest subpart I—Requirements for Corrosion Control—is the wrong place for a rule addressing internal corrosion control in design and construction. Commenters cite two reasons for their position. First, the regulations in subpart I primarily address operation and maintenance requirements. These requirements apply to pipelines existing when the regulations are issued. Design and construction requirements, such as those in the final rule, apply only to new and replaced pipelines. The commenters suggest PHMSA place these requirements applicable only to new and replaced pipelines in one of the subparts of 49 CFR part 192 which contain no requirements applicable to existing pipelines. Second, some commenters suggest that operators designing and constructing pipelines might overlook design and construction requirements placed in subpart I. Commenters who addressed the issue were not uniform in their suggestions for alternate placement within Part 192. They suggest placement in subpart C—Pipe Design, subpart D—Design of Pipeline Components, or subpart G—General Construction Requirements for Transmission Lines and Mains.

Some regulations in subpart I already include design and construction requirements, such as requirements for pipe coating. PHMSA believes consolidating corrosion control requirements strengthens the planning aspects of this regulation. To address commenters' concerns, PHMSA has reworded the final rule to be consistent with other design and construction requirements in the regulations. We have also added an applicability date to the final rule clearly indicating the non-retroactive effect of the design and construction requirements. Finally, the final rule cross references subpart I in subpart D to alert those designing pipelines of the need to consult corrosion control requirements.

Recordkeeping

Many commenters and the TPSSC expressed concern about the recordkeeping provision proposed in the NPRM, contending it would be costly, difficult to adhere to, and burdensome. PHMSA agrees. Operators normally maintain as-built drawings and other construction records. These records may already contain adequate explanation of variances. If not, some additional explanation will be necessary. We have modified the final rule to require maintenance of records demonstrating compliance.

Changes Affecting Downstream Pipeline

Few commenters discussed the proposal to require an operator to address the effect changes to an existing pipeline would have on the risk of internal corrosion in the downstream portions of the pipeline. The Texas Pipeline Association noted that the proposal matched what prudent operators already do and that the proposed standard was appropriate. Another commenter noted the proposed language might be too restrictive because it would require an operator to use equipment to address the effects. One member of the TPSSC noted that the proposal would apply to any change to the pipeline and suggested clarifying the regulation to apply only to changes affecting configuration. We have made changes to the final rule to limit applicability to changes that have the potential for affecting downstream risk. The final rule allows operator flexibility in addressing the risks.

[2] The only fire was almost instantaneously extinguished by the water.

[3] Based on data reported for incidents occurring between 2000 and 2005.

Changes Due To Uprating

Existing pipeline safety regulations (§ 192.555 and § 192.557) allow an operator to increase maximum allowable operating pressure of a gas pipeline through a process called uprating. Uprating results in operation at an increased hoop stress. A pipeline operating at a hoop stress of 20 percent or more of the specified minimum yield strength is considered a transmission pipeline by definition regardless of its function (§ 192.3). Thus, uprating a distribution line may result in its classification as a transmission line. A member of the TPSSC asked whether such a change would result in the line being considered a new transmission line subject to the design and construction requirements of this final rule. The answer is no. The uprated line is not newly constructed. However, to the extent an operator makes replacements in the line in connection with uprating to meet the requirements of § 192.555(b)(2) or § 192.557(b)(3), the replacements must be designed and constructed in accordance with this final rule. In addition, the operator would have to consider the effect of the replacement on internal corrosion risk to the downstream portion of the pipeline.

Terminology

The proposed rule allows an operator to deviate from specific aspects of design and construction if the operator can demonstrate that compliance is ''impracticable'' or ''unnecessary.'' Some commenters said that the terms are too subjective and will result in disputes over the appropriateness of an operator's actions. They suggest clarification through examples. We do not agree that further clarification is required at this time. The terms ''impracticable'' and ''unnecessary'' are used elsewhere in regulation. As long as an operator makes a reasonable effort to address internal corrosion in design and construction, the potential for disagreement is slight. At the request of the TPSSC, PHMSA intends to conduct a public workshop on implementation of this regulation. Part of the workshop could be devoted to developing examples of situations in which regulators and industry agree that compliance with the final rule would be presumptively impracticable or unnecessary.

The Final Rule

The final rule adds a new subsection to § 192.143 in Subpart D—Design of Pipeline Components. The new subsection cross-references the design and installation requirements specifically addressing corrosion control in Subpart I—Requirements for Corrosion Control.

The final rule also adds a new section to subpart I. The new section, § 192.476, requires an operator to address internal corrosion risk when designing and constructing a new gas transmission line or when replacing line pipe or components in a transmission line.

Paragraph (a) addresses design and construction. It imposes a general performance requirement—that the design and construction of new and replaced pipelines include features to reduce the risk of internal corrosion. More specifically, the rule identifies three categories of corrosion control features that an operator must provide for unless doing so is impracticable or unnecessary: (1) Configuration to reduce the risk that liquids will collect in the line (paragraph (a)(1)); (2) effective liquid removal features (paragraph (a)(2)); and (3) ability to use corrosion monitoring devices in locations with significant potential for internal corrosion (paragraph (a)(3)).

There are many design features that an operator can incorporate to address the requirements of paragraph (a). These include the following:

- An operator can minimize dead ends and low areas;
- An operator can minimize aerial crossings, since these can result in variation of temperature;
- An operator can design for turbulent flow, in which the velocity at a given point varies erratically in magnitude and direction, to decrease the chance of liquids separating from the flow and accumulating;
- An operator can design a pipeline to minimize entry of water and corrosive gases at receipt locations;
- When corrosive gas is expected, an operator can provide slam valves to isolate systems;
- An operator can apply coatings to interior walls to inhibit internal corrosion;
- An operator can identify critical low spots and instrument the pipeline to monitor relevant operating conditions (temperature, pressure, velocity, dew point);
- An operator can evaluate seasonal nature of delivery and capacity patterns and design to avoid no-or low-flow conditions;
- An operator can include equipment to evaluate gas characteristics; and
- An operator can include equipment to allow sampling at key areas, such as pig traps, isolated sections with no flow, dead ends, and river and road crossings.

Further, design should allow the use of cleaning pigs.[4]

Paragraph (b) provides exceptions to applicability. The design and construction requirements do not apply to pipeline installed or replacements made before the effective date of the regulation. They also do not apply to offshore pipelines.

Paragraph (c) requires an operator to consider and address the impact of changes in the physical features of a pipeline on internal corrosion risks of an existing downstream pipeline. This will ensure that changes in configuration made after a pipeline begins operation do not inadvertently increase the risk of internal corrosion. An operator who finds an increased risk due to changes upstream might need to install liquid removal equipment. Alternatively, after analysis, an operator may decide operation and maintenance measures would adequately address the impact. In its investigation of the Carlsbad accident, the NTSB noted the impact of the addition of a pig receiver many years after original construction.[5] This change in configuration allowed the liquids from pigging which were not caught in the receiver to flow downstream supposedly to be caught in the drip installed at the time of original construction to capture liquids before the low points near the river. The NTSB report notes that the pig receiver was added without also installing a separate storage leg or tank to collect the liquids from pigging. The NTSB also notes that partial clogging of the original drip, a maintenance issue, allowed liquids to bypass the drip and collect at the eventual rupture site.

Paragraph (d) requires an operator to maintain records demonstrating compliance. Written procedures supported by as-built drawings and other construction records ordinarily will satisfy this requirement. However, these records must adequately show why an action described in paragraph (a)(1), (a)(2), or (a)(3) is impracticable or unnecessary. For example, an operator might have a written design allowing pipe to be laid following the contour of the land. To avoid accumulation of liquid in the low spots, the design procedure might call for incorporating

[4] Section 192.150 requires an operator to design most new and replaced transmission pipeline to allow the use of instrumented internal inspection devices. The exceptions to § 192.150 include certain lower risk gathering lines and lines too small in diameter to accommodate instrumented internal inspection devices. Although neither § 192.150 nor this final rule expressly requires designing to allow the use of cleaning pigs, it is much easier to accommodate cleaning pigs than instrumented internal inspection devices.

[5] NTSB Report PAR 03–01, pages 41–42.

design features to maintain gas velocity or to remove liquids. The actual construction records or as-built drawings would show what the operator actually did. Another example might be a construction record showing the use of a filter or separator at the gate station of a distribution pipeline. Regardless of the choices in recordkeeping an operator makes, the records must show circumstances justifying variance based on impracticability or lack of necessity. For example, if an operator does not provide features for effective liquid removal at low spots, the records must show why it is not necessary to do so.

Regulatory Analyses and Notices

Privacy Act Statement

Anyone can search the electronic form of all comments received in response to any of our dockets by the name of the individual submitting the comment (or signing the comment, if submitted on behalf of an association, business, labor union, etc.). The Department of Transportation's complete Privacy Act Statement is published in the **Federal Register** on April 11, 2000 (65 FR 19477), and on the Web at *http://dms.dot.gov.*

Executive Order 12866 and DOT Policies and Procedures

This final rule is not a significant regulatory action under section 3(f) of Executive Order 12866 (58 FR 51735) and, therefore, was not subject to review by the Office of Management and Budget. This final rule is not significant under the Regulatory Policies and Procedures of the Department of Transportation (44 FR 11034).

Commenters pointed to discrepancies in the incident data used for the regulatory evaluation. Those discrepancies have been corrected in the regulatory evaluation for this final rule. One member of the TPSSC questioned whether the analysis included consideration of uncertainties. We have considered the comment and decided that our analysis adequately handles uncertainty in benefits and costs.

Regulatory Flexibility Act

Under the Regulatory Flexibility Act (5 U.S.C. 601 *et seq.*), PHMSA must consider whether rulemaking actions would have a significant economic impact on a substantial number of small entities. This final rule would affect operators of gas transmission pipelines and onshore gas gathering pipelines. The number of small entities operating gas transmission pipelines is not substantial and the cost of compliance with the final rule is small. Therefore, I certify, under 5 U.S.C. 605, that this rulemaking will not have a significant impact on a substantial number of small entities.

Executive Order 13175

PHMSA has analyzed this final rule according to Executive Order 13175, ''Consultation and Coordination with Indian Tribal Governments.'' Because the final rule will not significantly or uniquely affect the communities of the Indian tribal governments nor impose substantial direct compliance costs, the funding and consultation requirements of Executive Order 13175 do not apply.

Paperwork Reduction Act

This final rule affects information collection that the Office of Management and Budget has approved under Control Number 2137–0049 (recordkeeping under 49 CFR part 192). Operators of gas transmission pipelines must keep records to show the adequacy of corrosion control measures. In addition, they must keep construction records and make them available to individuals operating and maintaining the pipeline. The final rule may require some added effort to document decisions about internal corrosion made during design and construction. Because of existing recordkeeping needs and prudent business practice, PHMSA estimates the added burden hours will be nominal.

Unfunded Mandates Reform Act of 1995

This final rule does not impose unfunded mandates under the Unfunded Mandates Reform Act of 1995. It does not result in costs of $100 million or more to either State, local, or tribal governments, in the aggregate, or to the private sector, and is the least burdensome alternative that achieves the objective of the rulemaking.

National Environmental Policy Act

PHMSA has analyzed the final rule for purposes of the National Environmental Policy Act (42 U.S.C. 4321 *et seq.*). Because the final rule requires limited physical change or other work that would disturb pipeline rights-of-way, PHMSA has determined the final rule is unlikely to affect the quality of the human environment significantly. An environmental assessment document is available for review in the docket.

Executive Order 13132

PHMSA has analyzed the final rule according to Executive Order 13132 (''Federalism''). The final rule does not have a substantial direct effect on the States, the relationship between the national government and the States, or the distribution of power and responsibilities among the various levels of government. The final rule does not impose substantial direct compliance costs on State and local governments. Federal pipeline safety law prohibits State safety regulation of interstate pipelines. This regulation would not preempt state law for intrastate pipelines. Therefore, the consultation and funding requirements of Executive Order 13132 do not apply.

Executive Order 13211

Transporting gas impacts the nation's available energy supply. However, this final rule is not a ''significant energy action'' under Executive Order 13211. It also is not a significant regulatory action under Executive Order 12866 and is not likely to have a significant adverse effect on the supply, distribution, or use of energy. Further, the Administrator of the Office of Information and Regulatory Affairs has not identified this final rule as a significant energy action.

List of Subjects in 49 CFR Part 192

Design and construction, Internal corrosion, Pipeline safety.

■ For the reasons provided in the preamble, PHMSA amends 49 CFR part 192 as follows:

PART 192—TRANSPORTATION OF NATURAL AND OTHER GAS BY PIPELINE: MINIMUM FEDERAL SAFETY STANDARDS

■ 1. The authority citation for part 192 continues to read as follows:

Authority: 49 U.S.C. 5103, 60102, 60104, 60108, 60109, 60110, 60113, and 60118; and 49 CFR 1.53.

■ 2. Amend § 192.143 by designating existing text as paragraph (a) and adding a new paragraph (b) to read as follows:

§ 192.143 General requirements.

* * * * *

(b) The design and installation of pipeline components and facilities must meet applicable requirements for corrosion control found in subpart I of this part.

■ 3. Add § 192.476 to read as follows:

§ 192.476 Internal corrosion control: Design and construction of transmission line.

(a) *Design and construction.* Except as provided in paragraph (b) of this section, each new transmission line and each replacement of line pipe, valve, fitting, or other line component in a transmission line must have features incorporated into its design and construction to reduce the risk of

internal corrosion. At a minimum, unless it is impracticable or unnecessary to do so, each new transmission line or replacement of line pipe, valve, fitting, or other line component in a transmission line must:

(1) Be configured to reduce the risk that liquids will collect in the line;

(2) Have effective liquid removal features whenever the configuration would allow liquids to collect; and

(3) Allow use of devices for monitoring internal corrosion at locations with significant potential for internal corrosion.

(b) *Exceptions to applicability.* The design and construction requirements of paragraph (a) of this section do not apply to the following:

(1) Offshore pipeline; and

(2) Pipeline installed or line pipe, valve, fitting or other line component replaced before May 23, 2007.

(c) *Change to existing transmission line.* When an operator changes the configuration of a transmission line, the operator must evaluate the impact of the change on internal corrosion risk to the downstream portion of an existing onshore transmission line and provide for removal of liquids and monitoring of internal corrosion as appropriate.

(d) *Records.* An operator must maintain records demonstrating compliance with this section. Provided the records show why incorporating design features addressing paragraph (a)(1), (a)(2), or (a)(3) of this section is impracticable or unnecessary, an operator may fulfill this requirement through written procedures supported by as-built drawings or other construction records.

Issued in Washington, DC on April 16, 2007.

Thomas J. Barrett,

Administrator.

[FR Doc. E7–7701 Filed 4–20–07; 8:45 am]

BILLING CODE 4910–60–P

DEPARTMENT OF COMMERCE

National Oceanic and Atmospheric Administration

50 CFR Part 679

[Docket No. 070213033–7033–01; I.D. 041807B]

Fisheries of the Exclusive Economic Zone Off Alaska; Yellowfin Sole by Vessels Using Trawl Gear in the Bering Sea and Aleutian Islands Management Area

AGENCY: National Marine Fisheries Service (NMFS), National Oceanic and Atmospheric Administration (NOAA), Commerce.

ACTION: Temporary rule; closure.

SUMMARY: NMFS is closing directed fishing for yellowfin sole by vessels using trawl gear in the Bering Sea and Aleutian Islands management area (BSAI). This action is necessary to prevent exceeding the second seasonal allowance of the 2007 halibut bycatch allowance specified for the trawl yellowfin sole fishery category in the BSAI.

DATES: Effective 1200 hrs, Alaska local time (A.l.t.), April 19, 2007, through 1200 hrs, A.l.t., May 21, 2007.

FOR FURTHER INFORMATION CONTACT: Jennifer Hogan, 907–586–7228.

SUPPLEMENTARY INFORMATION: NMFS manages the groundfish fishery in the BSAI according to the Fishery Management Plan for Groundfish of the Bering Sea and Aleutian Islands Management Area (FMP) prepared by the North Pacific Fishery Management Council under authority of the Magnuson-Stevens Fishery Conservation and Management Act. Regulations governing fishing by U.S. vessels in accordance with the FMP appear at subpart H of 50 CFR part 600 and 50 CFR part 679.

The second seasonal allowance of the 2007 halibut bycatch allowance specified for the trawl yellowfin sole fishery category in the BSAI is 195 metric tons as established by the 2007 and 2008 final harvest specifications for groundfish in the BSAI (72 FR 9451, March 2, 2007).

In accordance with § 679.21(e)(7)(v), the Administrator, Alaska Region, NMFS, has determined that the second seasonal allowance of the 2007 halibut bycatch allowance specified for the trawl yellowfin sole fishery category in the BSAI has been caught. Consequently, NMFS is closing directed fishing for yellowfin sole by vessels using trawl gear in the BSAI.

After the effective date of this closure the maximum retainable amounts at § 679.20(e) and (f) apply at any time during a trip.

Classification

This action responds to the best available information recently obtained from the fishery. The Assistant Administrator for Fisheries, NOAA (AA), finds good cause to waive the requirement to provide prior notice and opportunity for public comment pursuant to the authority set forth at 5 U.S.C. 553(b)(B) as such requirement is impracticable and contrary to the public interest. This requirement is impracticable and contrary to the public interest as it would prevent NMFS from responding to the most recent fisheries data in a timely fashion and would delay the closure of directed fishing for yellowfin sole by vessels using trawl gear in the BSAI. NMFS was unable to publish a notice providing time for public comment because the most recent, relevant data only became available as of April 17, 2007.

The AA also finds good cause to waive the 30-day delay in the effective date of this action under 5 U.S.C. 553(d)(3). This finding is based upon the reasons provided above for waiver of prior notice and opportunity for public comment.

This action is required by § 679.21 and is exempt from review under Executive Order 12866.

Authority: 16 U.S.C. 1801 *et seq.*

Dated: April 18, 2007.

James P. Burgess

Acting Director, Office of Sustainable Fisheries, National Marine Fisheries Service.

[FR Doc. 07–1999 Filed 4–18–07; 1:07 pm]

BILLING CODE 3510–22–S

Proposed Rules

Federal Register
Vol. 72, No. 77
Monday, April 23, 2007

This section of the FEDERAL REGISTER contains notices to the public of the proposed issuance of rules and regulations. The purpose of these notices is to give interested persons an opportunity to participate in the rule making prior to the adoption of the final rules.

DEPARTMENT OF HOMELAND SECURITY

Office of the Secretary

6 CFR Part 37

[Docket No. DHS–2006–0030]

RIN 1601–AA37

Minimum Standards for Driver's Licenses and Identification Cards Acceptable by Federal Agencies for Official Purposes

AGENCY: Office of the Secretary, DHS.

ACTION: Notice of public meeting; request for comments.

SUMMARY: The Department of Homeland Security, Office of the Secretary, will hold a public meeting to receive comments on the Notice of Proposed Rulemaking, ''Minimum Standards for Driver's Licenses and Identification Cards Acceptable by Federal Agencies for Official Purposes,'' published in the **Federal Register** on March 9, 2007 (72 FR 10820). We encourage interested parties to attend the meeting and submit comments for discussion during the meeting. In addition, we will also seek comments via email for discussion during the meeting from any party who is unable to attend in person. The webcast of the public meeting will be viewable at *http://www.realidtownhall.com*.

DATES: *Public Meeting:* We will hold the meeting on May 1, 2007, from 10 a.m. to 2 p.m.

ADDRESSES: We will hold the meeting in Freeborn Hall on the campus of the University of California, Davis. The university is located in the City of Davis, approximately 11 miles west of downtown Sacramento. The street address for Freeborn Hall is 104 Freeborn Hall, One Shields Ave., Davis, CA 95616.

FOR FURTHER INFORMATION CONTACT: For information concerning this public meeting, please contact Mike Kangior, U.S. Department of Homeland Security, Washington, DC 20528, at 202–282–8939.

SUPPLEMENTARY INFORMATION:

How Are Comments Being Solicited for This Rulemaking?

In addition to the public meeting on May 1, 2007, the Department of Homeland Security is soliciting comments through the following methods:

- *Federal Rulemaking Portal: http://www.regulations.gov*. Follow the instructions for submitting comments.
- *Fax:* 866–466–5370.
- *Mail:* Paper, disk or CD–ROM submissions can be mailed to the Department of Homeland Security, Attn: NAC 1–12037, Washington, D.C. 20538.

Please include the DHS Docket Number, DHS–2006–0030 on any comments submitted to DHS. Individuals that provide comments at the public meeting may also submit comments through one of the above methods.

How Can I Get Additional Information, Including Copies of This Notice or Other Related Documents?

The Federal Rulemaking Portal at *www.regulations.gov* maintains the public docket for this proposed rule. The docket number for the rule is DHS–2006–0030. Comments submitted during the public meeting, and any other documents submitted to DHS at the public meeting, including any comments that were not discussed at the meeting, will become part of this docket and will be available for inspection electronically at *http://www.regulations.gov*.

Where Can I Get Information on Service for Individuals With Disabilities?

To obtain information on facilities or services for individuals with disabilities or to request that we provide special assistance at the public meeting, please contact Mike Kangior as soon as possible. You will find his address and phone number in the **FOR FURTHER INFORMATION CONTACT** section of this notice.

Why Is the Department of Homeland Security Holding This Public Meeting?

This meeting serves as an additional opportunity for members of the public to submit comments on the proposed rule to DHS for consideration as part of the final rulemaking development process.

What Issues Should I Discuss at the Meeting?

The public meeting on May 1, 2007 will provide a forum for members of the public to discuss various issues related to the proposed rule. Such issues may include consumer concerns, verification, privacy/security, funding/implementation and law enforcement. For convenience to public participants who wish to attend the meeting, DHS intends to discuss these issues under the proposed agenda below.

What Is the Agenda for the Public Meeting?

Agenda

The agenda for the meeting on May 1, 2007 is as follows:

- Session I—Introduction and Overview.
- Session II—Presentation and discussion of public comments.

Dated: April 17, 2007.

Richard C. Barth,

Assistant Secretary of Policy Development.

[FR Doc. E7–7655 Filed 4–20–07; 8:45 am]

BILLING CODE 4410–10–P

NATIONAL CREDIT UNION ADMINISTRATION

12 CFR Part 701

RIN 3133–AD33

Member Inspection of Credit Union Books, Records, and Minutes

AGENCY: National Credit Union Administration.

ACTION: Proposed rule.

SUMMARY: The National Credit Union Administration (NCUA) is issuing a proposed rule on member inspection of federal credit union (FCU) books, records, and minutes. The rule provides that a group of members representing approximately one percent of the membership, with a proper purpose and upon petition, may inspect and copy the nonconfidential portions of the credit union's books, records, and minutes. This proposal standardizes and clarifies existing member inspection rights.

DATES: Comments must be received on or before June 22, 2007.

ADDRESSES: You may submit comments by any of the following methods (Please send comments by one method only):

- *Federal eRulemaking Portal: http://www.regulations.gov*. Follow the instructions for submitting comments.
- *NCUA Web site: http://www.ncua.gov/RegulationsOpinionsLaws/proposed_regs/proposed_regs.html*. Follow the instructions for submitting comments.
- *E-mail:* Address to *regcomments@ncua.gov.* Include ''[Your name] Comments on Proposed Rule 701.3'' in the e-mail subject line.
- *Fax:* (703) 518–6319. Use the subject line described above for e-mail.
- *Mail:* Address to Mary Rupp, Secretary of the Board, National Credit Union Administration, 1775 Duke Street, Alexandria, Virginia 22314–3428.
- *Hand Delivery/Courier:* Same as mail address.

FOR FURTHER INFORMATION CONTACT: Paul Peterson or Annette Tapia, Staff Attorneys, at the above address or telephone number (703) 518–6540.

SUPPLEMENTARY INFORMATION:

A. Background

This proposed rule provides that a group of members representing approximately one percent of an FCU's membership, upon petition and with a proper purpose, may obtain access to the nonconfidential portions of the FCU's books, records, and minutes.

FCUs are not-for-profit, member-owned cooperatives organized to provide financial services and products to their members. The financial interests of members in their credit union are similar to the financial interests shareholders have in for-profit corporations. Corporate shareholders have various methods to protect their financial interests in the corporation, including the right at common law and in various state statutes to inspect corporate books and records. Because of the similarity of interests between credit union members and corporate shareholders, NCUA legal opinions going back many years have stated that FCU members may inspect the FCU's books and records under the same terms and conditions that state corporation law where the FCU is located permits shareholder inspection of corporate records. *See, e.g.*, OGC Ops. 92–0101, 96–0451, and 06–0127B. These opinion letters are available at *http://www.ncua.gov*.

The NCUA Board believes regulating member inspection of FCU records is preferable to reliance on state corporation law. Corporation law on shareholder inspection, for example, varies from state to state, and FCUs should have a consistent standard regardless of an FCU's location. Some FCUs have branches in multiple states, further complicating the application of state law to inspection requests. In addition, some courts may refuse to apply their corporation law to inspection requests by FCU members or may incorrectly analogize the financial interests of credit union members to those of depositors in a mutual savings bank and deny members inspection on those grounds. *See, e.g.*, *Save Columbia Credit Union Committee* v. *Columbia Credit Union,* 139 P.3d 386, 393–95 (Wash. App. 2006) (refusing to apply state corporation law to records inspection request by members of a state-chartered credit union).

The Board considered when and why members might want to inspect FCU records. The law charges members with responsibility for important decisions that affect both the FCU and the members' financial interests. For example, a vote of the FCU's members is required on the election and removal of directors, mergers, conversion from federal to private account insurance, conversion from a federal to state charter or conversion to a mutual savings bank, and voluntary liquidations. In these situations, members may want to inspect FCU records to better inform themselves before voting and to ensure that directors are acting in the best interests of the members. There are other situations where the members want to inspect records to protect their financial interests, as discussed further below.

The Board also considered how stakeholders of depository institutions other than credit unions may inspect their institution's books and records. The Board identified an existing Office of Thrift Supervision (OTS) rule governing the right of shareholders to inspect the books, records, and minutes of federal stock savings associations. 12 CFR 552.11 (OTS Rule). The ownership interests of members in an FCU are similar to the ownership interests of stockholders in a stock savings association; the issues on which FCU members and stock bank shareholders vote are similar; and the regulatory and supervisory powers of NCUA and OTS over their respective regulated institutions are also similar. Accordingly, this proposed rule tracks, in large part, the OTS Rule. The proposal is also consistent with existing NCUA guidance on member inspection of FCU records. *See* FCU Handbook (Rev. 2006), p.68.

B. Paragraph-by-Paragraph Analysis

(a) Member Inspection Rights

Proposed paragraph (a) establishes the right of a group of members of an FCU, upon submission of a proper petition, to inspect and copy the credit union's books and records of account and minutes of the proceedings of the credit union's members, board of directors, and committees of directors. This inspection right is similar to that in the OTS Rule, with the use of a member petition in lieu of the stockholder affidavit requirement in the OTS Rule.

The member petition must meet the requirements in proposed paragraph (b). Also, inspection rights are limited to the nonconfidential portions of the credit union's books, records, and minutes. Proposed paragraph (d) defines confidential books, records, and minutes; all other books, records, and minutes are nonconfidential.

Minutes

The Board intends the phrase ''minutes of the proceedings at all meetings of its members, board of directors, and committees of directors'' to include any summary or recording of the proceedings and all documents, reports, studies, and visual aids considered by the meeting participants. The Board believes this broad interpretation of minutes is appropriate. For example, in situations where an FCU membership vote is required, the vote is either about the election or removal of directors or officers or is precipitated by the actions of the directors as in the case of a merger or conversion. Members should have access to the directors' deliberations to help members decide how to vote and help members determine if the directors are acting in the members' best interests.

Books and Records of Account

Courts have interpreted the phrase ''books and records of account'' differently. Some courts have interpreted the phrase broadly to include both financial and nonfinancial records while other courts have interpreted the phrase to include only financial records. *See, e.g.*, *Meyer* v. *Ford Industries, Inc.*, 538 P.2d 353, 358 (Or. 1975) (broad interpretation); *Corwin* v. *Abbott Laboratories*, 819 N.E.2d 1249 (Ill. App. 2004), *app. den.* 2005 Ill. LEXIS 609 (Ill. 2005) (phrase includes both financial and nonfinancial records); and *Jewelers International Showcase, Inc.* v. *Mandell*, 529 So. 2d 1211 (Fla. Dist. Ct App. 3d Dist. 1988) (stockholder was entitled to inspect financial records such as general ledger,

balance sheets, and profit and loss statements).

The NCUA Board believes a narrow interpretation is best. The plain language meaning of ''of account'' supports a limitation to accounting records. Stockholder inspection of corporate records under the Model Business Corporation Act (MBCA) is expressly limited to minutes and ''accounting records,'' and the Counsel to the Federal Home Loan Bank Board (FHLBB), in interpreting the predecessor to the OTS rule, has cited to the MBCA as authority for the OTS rule. Letter from Julie Williams, FHLBB Deputy General Counsel, dated September 17, 1986, located at 1986 FHLBB LEXIS 82 (*hereinafter* 1986 FHLBB DGC Letter); and Model Bus. Corp. Act § 16.02(b)(2)(1984). The Board believes the financial interests of members are adequately protected by combining a broad interpretation of minutes with a more restrictive interpretation of the phrase books and records of account.

Inspection and Copying

Generally, a member's right to inspect FCU minutes and records includes the right to make copies of those records. Obtaining copies enables members to provide the information to other members or, in some cases, to experts for independent analysis and review. If an FCU believes that certain of its records should not be copied, it may request that the regional director impose conditions on the inspection, as discussed further below.

(b) Petition for Inspection

Proposed paragraph (b) establishes the member petition requirements.

The petition must describe the particular records to be inspected and state a purpose for the inspection related to the business of the credit union. The petition must state that the petitioners as a whole, or certain named petitioners, agree to pay the direct and reasonable costs associated with search and duplication of requested material. The petition must also state that the inspection is not desired for any purpose in the interest of a business or object other than the business of the credit union; that the members signing the petition have not within five years preceding the signature date sold or offered for sale, and do not now intend to sell or offer for sale, any information obtained from the credit union; and that the members signing the petition have not within the past five years aided or abetted any other person in procuring any information from the credit union for purposes of sale. The petition must name one or more members who will represent the petitioners on issues such as inspection procedures, costs, and potential disputes. At least one percent of the credit union's members, with a minimum of 20 members and a maximum of 250 members, must sign the petition.

The language of this proposed paragraph is similar to language in paragraphs (b) and (c) of the OTS Rule.

Minimum Signature Requirement

The OTS Rule requires stockholders seeking records to own a certain number of shares and to submit an affidavit describing their request to the savings association. For shareholders who have owned their shares at least six months, the affidavit generally must be signed by shareholders representing at least one percent of the outstanding shares. OTS Rule, paragraphs (b)(1) and (2). The proposal substitutes a member petition for this stockholder affidavit. The petition also employs a minimum signature requirement of one percent of the members, representing an ownership interest roughly equivalent to one percent of the shares of a stock association. The proposed rule further provides that a minimum of 20 members and a maximum of 250 must sign the petition. The one percent and minimum and maximum signature requirements are similar to those established in NCUA's standard FCU bylaws for members seeking a nomination by petition to run for election to an FCU's board of directors. NCUA Standard FCU Bylaws, Art. V, Sec. 1 (Rev. April 2006).

Proper Purpose

The purpose of an inspection must be related to the business of the credit union. A proper purpose includes attempting to ascertain and protect members' financial interests and to ascertain possible mismanagement. *See, e.g.*, 1986 FHLBB DGC Letter (interpreting OTS Rule).

The issue of member inspection of records may arise, for example, in the context of a member vote on merger or charter conversion. Members of a merging or converting credit union may desire access to the due diligence performed by their directors, and other credit union books and records, to determine if the directors are acting in the members' best interests. Members of a credit union merging with another credit union may also have an interest in determining if they are receiving an appropriate share adjustment. 12 CFR 708b.103(a)(5). Members may have a financial interest in ascertaining how the proposed merger or conversion will affect their services, rates, and fees and how the directors analyzed this issue. Members of a credit union merging with a bank may have a further interest in determining the value of their shares plus any associated premium and whether the directors carefully considered all the available merger opportunities with a view to maximizing the financial benefit to the members. Members of a credit union converting to a bank may also want to know if their directors considered the possibility of a merger and appropriate payments to members.

Members may wish to obtain FCU records in other contexts. For example, some members might want records about FCU decisions that have a direct effect on the members, such as a determination to close a branch office or to discontinue a service or product. Members electing directors might want records from the credit union about the qualifications of and benefits received by sitting directors. Members might also want records about the qualifications and compensation of senior management.

Burden of Proof on Proper Purpose

Generally, in the absence of evidence indicating an improper purpose, courts do not assume that stockholders of a corporation requesting an inspection intend to use the information improperly just because it would be possible for them to do so. *Fears* v. *Cattlemen's Inv. Co.*, 483 P.2d 724, 730 (Okla. 1971). The requirement in the proposed rule that petitioners state they are not intending to sell the information, nor have they aided or abetted such sales in the past five years, helps ensure a proper purpose. The minimum signature requirement in the proposal also helps ensure a proper purpose because members seeking signatures will have to convince other members that they share a common and appropriate purpose. Accordingly, a petition meeting the requirements of paragraph (c) creates a presumption of proper purpose, and an FCU should have substantial evidence of improper purpose to deny inspection for that reason.

Description of Records

The petition must describe the particular records sought and the description must be specific enough to allow the FCU to identify responsive records. The FCU may ask the petitioners for more information if necessary to help understand the scope of the request.

(c) Inspection Procedures

Proposed paragraph (b) provides the inspection procedures. Within 14 days

of receipt of a petition, the FCU must either allow inspection and copying of all requested material or inform the petitioning members in writing why it is not able to do so. Inspection may be in person or by an agent or attorney and at any reasonable time or times. Member inspection rights under this paragraph are in addition to any other member inspection rights afforded by law, regulation, or the credit union's bylaws.

Unless a regional director imposes conditions on a particular request for records, the member's right to inspect records includes the right to make copies. In many cases, the credit union will mail or deliver copies of the requested documents to the individual(s) designated by the petitioners. In some cases, however, the petitioners may request an inspection of requested documents at the credit union before copies are made or the credit union may ask the petitioners to come to the credit union to pick up the copies. The Board recognizes original documents may be at a credit union office some distance from where the petitioners live and that conducting an on-site inspection or pick-up may be difficult or expensive for petitioners. The Board expects credit unions and petitioners to work out reasonable, mutually acceptable arrangements for on-site inspection or pick-up, including, for example, movement of documents or copies to a credit union branch location convenient to petitioners.

The language of this paragraph is similar to language in paragraph (b) of the OTS Rule. The proposed 14-day compliance timeframe, not found in the OTS Rule, will ensure that an FCU responds promptly to the member petition. The proposed paragraph also recognizes that members may have additional inspection rights, including, for example, inspection rights related to merger compensation in another pending NCUA rulemaking.

(d) Confidential Books, Records, and Minutes

Proposed paragraph (d) provides that members do not have the right to inspect portions of the books, records, or minutes of an FCU under certain circumstances: first, if federal law or regulation prohibits disclosure of that portion; second, if that portion contains nonpublic personal information; and, third, if that portion contains information about credit union employees or officials the release of which would constitute an unwarranted invasion of personal privacy.

Federal Law or Regulation Prohibits Disclosure

The provision prohibits credit unions, for example, from disclosing nonpublic records generated by NCUA, including reports of inspection that might otherwise be considered by the FCU's board of directors and included within its meeting minutes. 12 CFR 792.40, 792.49.

Nonpublic Personal Information

The members of a credit union are both its customers and its owners, and the credit union maintains sensitive personal and financial information about members that must be protected. The OTS Rule protects the privacy of a bank's customers by providing that no stockholder may inspect any list of depositors or borrowers or their addresses, deposit, or loan records or any data from which that information can be constructed. The proposed rule provides similar protection for the personal and financial information of a credit union's members, but instead of a reference to specific sensitive information as in the OTS Rule, the proposal will protect all nonpublic personal information as that term is defined in NCUA's rules on the privacy of consumer financial information. 12 CFR part 716. Nonpublic personal information includes information such as the fact an individual is a member, account numbers and balances, transaction information, consumer reports, and any information provided by the member to obtain a financial product from the credit union. 12 CFR 716(r). Information that is publicly available or information that does not identify a particular member would not be nonpublic personal information. 12 CFR 716(q).

Information About Credit Union Employees or Officials

The proposed rule also protects from inspection information about the FCU's employees and officials if disclosure would constitute a clearly unwarranted invasion of personal privacy. This terminology is similar to the confidentiality provision in the Freedom of Information Act. 5 U.S.C. 552(b)(6). Some categories of information that will receive confidentiality treatment include marital status, financial status, children, medical conditions, dates of birth, religious affiliations, citizenship data, sexual inclinations, and social security numbers. *See Freedom of Information Act Guide and Privacy Act Overview*, U.S. Department of Justice (May 2004 ed.).

As an exception to this confidentiality provision, FCU members may inspect materials describing the compensation and benefits provided to senior executive officers. The member-owners of a credit union have a financial interest in how their credit union is managed, and that interest extends to knowledge about who the senior managers are, their qualifications, and their compensation levels. The members' interest in this information outweighs any privacy interests the senior managers may have in the information. Accordingly, the rule provides that members may inspect information about the qualifications, compensation and benefits of senior executive officers, as defined in § 701.14 of NCUA's rules:

> Senior executive officer means a credit union's chief executive officer (typically this individual holds the title of president or treasurer/manager), any assistant chief executive officer (e.g., any assistant president, any vice president or any assistant treasurer/ manager), and the chief financial officer (controller). The term ''senior executive officer'' also includes employees of an entity, such as a consulting firm, hired to perform the functions of positions covered by the regulation.

12 CFR 701.14(b)(2).

Other Considerations

This proposal provides confidentiality only for materials the release of which is prohibited by federal law, materials that contain nonpublic personal information, and personal information about FCU employees and officials. In some states, courts have withheld other types of documents from shareholder inspection, such as confidential internal correspondence or materials containing corporate trade secrets. *See, e.g., Morton* v. *Rodgers*, 20 Ariz. App. 581, 514, P.2d 752 (Ariz. Div. 1, 1973) (trade secrets); *State Ex. Rel. Armour & Co.* v. *Gulf Sulphur Corp.*, 231, A.2d 470 (Del. 1967) (trade secrets); and *State ex rel. Jones* v. *Ralston Purina Co.*, 358 S.W.2d 772, 778 (Mo. 1962) (internal correspondence). As one court noted, however:

> Both under the common law and under our statute a stockholder of a corporation is entitled to examine the books and records of the corporation * * *. The right rests upon the proposition that, while the corporation holds the legal title to its property, the stockholders are deemed to be the real and beneficial owners thereof and, as such, are entitled to information concerning the management of the property and business which they have confided to the officers and directors of the corporation as their agents * * *. It ordinarily is not enough to deny the right that the information sought is of a confidential nature.

Nationwide Corp. v. *Northwestern National Life Insurance Co.*, 251 Minn. 255, 256; 87 N.W.2d 671, 672 (Minn. 1958).

This proposal, like the OTS Rule, has no confidentiality provisions related to internal memoranda or trade secrets for several reasons. First, credit unions do not generally have trade secrets, that is, secret formulas or technology on which the success of the organization is dependent, and cases that deal with confidential internal correspondence generally do not provide a standard by which confidentiality can be measured. Second, it is unlikely that, given the narrow interpretation of ''books and records of account'' intended by the Board, any materials deserving of confidentiality would appear among those materials subject to inspection. Third, even if confidential materials appear among the materials subject to this rule, requested materials must be relevant to the petitioners' stated business purpose before they become subject to inspection. *See, e.g., Azzar* v. *Primebank Federal Savings Bank*, 499 N.W.2d 793, 798 (Ct. App. Mich. 1993)(interpreting the OTS Rule). Finally, and as discussed above, if a credit union has substantial evidence of an improper purpose, it may deny inspection for that reason.

In the unlikely event there are portions of relevant FCU books and records of account or minutes the public release of which might cause the credit union substantial competitive injury or financial damage, the dispute resolution paragraph of the proposed rule permits the regional director to place conditions on member inspection that balance the interests of the member-owners in the requested information against any interests the credit union may have in maintaining confidentiality. The regional director's authority to resolve disputes is discussed further below.

The NCUA Board also considered if privileged information, that is, exempt from discovery in court cases, should be withheld from members. Case law on the corporate shareholder's right to inspect privileged information differs by jurisdiction. In California, for example, shareholders lack the right to inspect corporate books and records covered by the attorney-client privilege. *National Football League Properties, Inc.* v. *Oakland Raiders*, 75 Cal. Rptr. 2d 893 (Ca. Ct. App. 6th District 1998). In other jurisdictions, however, shareholders who are concerned with corporate mismanagement may inspect attorney-client privileged documents. *Beard* v. *Ames*, 168 A2d 119 (N.Y. 1983); *Garner* v. *Wolfinbarger*, 430 F.2d 1093 (5th Cir. 1970). For example, in determining that stockholders could inspect communications between attorney and corporate management under some circumstances, the *Garner* court stated:

> But in assessing management assertions of injury to the corporation it must be borne in mind that management does not manage for itself and that the beneficiaries of its action are the stockholders. Conceptualistic phrases describing the corporation as an entity separate from its stockholders are not useful tools of analysis. They serve only to obscure the fact that management has duties which run to the benefit ultimately of the stockholders.

Id. at 1101.

The Board believes member-owners with a proper purpose should have access to relevant FCU information. Accordingly, and like the OTS Rule, this proposal does not include confidentiality protection for privileged information, but that does not mean that privileged material will automatically be subject to inspection. Privileged material would have to be the subject of a proper petition with a valid purpose; it would have to fall within the scope of ''books and records of account'' or ''minutes;'' and it would have to be relevant to the petitioners'' stated purpose, all before it would be subject to inspection. Proposed paragraph (f) also provides regional directors with authority to resolve disputes, and a regional director could place conditions on the release of the privileged material where appropriate.

The FCU may have other minutes or books and records of account that it has designated as confidential by policy or otherwise. That designation by an FCU does not defeat the inspection rights of members. If the requested material does not contain confidential information as described in § 701.3(d), the member-owners have the right to inspect it upon a proper petition. Again, as discussed below, a regional director may impose conditions on inspection and copying in appropriate cases.

In some cases, materials requested by members may include a mix of both confidential portions and nonconfidential portions. An FCU must make as much of the nonconfidential material available to members as possible, redacting or withholding only the confidential portions.

(e) Costs

Proposed paragraph (e) states that an FCU may charge petitioners the direct and reasonable costs associated with search and duplication but it may not charge for other costs, including indirect costs or attorney's fees.

While the OTS Rule does not specifically address the reimbursement for costs of shareholder inspection and copying of stock savings association records, an OTS legal opinion describes that reimbursement:

> In our view, a federal stock association may charge a requesting Qualifying Shareholder reasonable expenses for document searches, duplication, and direct costs associated with producing and delivering documents. However, a requesting Qualifying Shareholder is not obligated to pay the association's attorneys fees in order to gain access to review the association's books and records required to be made available to shareholders under section 552.11.

Letter from Harris Weinstein, OTS Chief Counsel, dated December 5, 1991 (1991 OTS LEXIS 68). The proposed paragraph (e) addresses costs in a manner similar to that described in OTS legal opinions.

Typically, the direct costs of search and duplication would include only the number of hours a clerk might take to locate and duplicate the requested documents multiplied by the clerk's hourly compensation rate, plus the per-page costs of duplication. Requesters need not reimburse the credit union for other costs, including costs associated with the management or supervision of the person(s) conducting the search, costs to review documents, costs associated with in-person inspection of records, overhead costs, or the costs of any legal services.

As noted above, the petition must recognize the obligation of the petitioners as a whole, or certain named petitioners, to pay the direct and reasonable costs associated with search and duplication. Petitioners may also include in the petition, if they want, a maximum amount that they are willing to pay; and the FCU, if it wants, may provide petitioners with an estimate of the search and duplication costs. The rule does not require, however, that petitioners pay in advance, or agree to pay any specific amount, before the FCU provides the petitioners with the requested documents.

(f) Dispute Resolution

Proposed paragraph (f) provides, in the event of a dispute between an FCU and its members concerning a petition for inspection or the associated costs, either party may submit the dispute to the regional director. The regional director, after obtaining the views of both parties, will direct the credit union either to withhold the disputed materials or to make them available for member inspection and copying. The regional director may place conditions upon release, if appropriate. Depending on the circumstances, conditions

imposed by the regional director might include limitations on making copies or a requirement that the parties enter into a contract restricting the use or further dissemination of the material.

The OTS Rule does not contain a dispute resolution procedure. The NCUA Board believes that a dispute resolution procedure is necessary to protect both the inspection rights of members and the FCU's interests.

In other circumstances involving member disputes with FCUs, NCUA usually refers the dispute to the FCU's supervisory committee for resolution. The proposed rule does not require such referral because, in certain circumstances, such as a pending member vote on a charter or share insurance conversion or a merger, members' need for the information may be time sensitive. Still, in the event of a dispute over access to FCU records, petitioners, if they desire, may contact an FCU's supervisory committee before taking it directly to the regional director. Similarly, if a regional director receives a request from a petitioner for dispute resolution and determines that resolution is not time sensitive, the director may refer the matter to the FCU's supervisory committee for analysis and response before the director makes any decision about the dispute.

The NCUA Board does not believe that specific time frames for regional director action are appropriate. The time needed for dispute resolution could vary significantly from case to case depending on the complexity of the dispute. In addition, the Board does not believe a right to appeal to the Board is necessary.

C. Request for Public Comment

NCUA's goal is to promulgate clear and understandable regulations that impose minimal regulatory burden. The Board requests public comments on whether the proposed rule is understandable and minimally intrusive and also solicits specific suggestions to improve the content of the rule.

D. Regulatory Procedures

Regulatory Flexibility Act

The Regulatory Flexibility Act requires NCUA to prepare an analysis to describe any significant economic impact a rule may have on a substantial number of small credit unions, defined as those under ten million dollars in assets. This proposed rule standardizes and clarifies the rights of members to inspect FCU records. The rule is not a significant departure from existing practice that FCUs must permit inspection under the same terms and conditions that state law requires for shareholders to inspect corporation records. The proposed rule requires that a minimum of one percent of the FCU's members sign a petition to obtain access. In some states, this burden on the members might exceed the burden on shareholders to obtain access and so reduces the likelihood of an FCU having to grant access. Accordingly, the Board does not anticipate that the proposed rule, if adopted, would have a significant economic impact on a substantial number of small credit unions.

Paperwork Reduction Act

Section 701.3 contains information collection requirements. As required by the Paperwork Reduction Act of 1995 (44 U.S.C. 3507(d)), NCUA is submitting a copy of this proposed regulation as part of an information collection package to the Office of Management and Budget (OMB) for its review and approval of a new collection of information.

The proposed rule standardizes and clarifies the circumstances and conditions under which FCU members may inspect and copy an FCU's books, records of accounts, and minutes of meetings. The FCU must permit inspection of relevant records if it receives a member petition stating a proper purpose for inspection and signed by at least one percent of members, with a minimum of five and a maximum of 250.

NCUA does not believe members will use this petition authority often. NCUA estimates that there will be, perhaps, five such petitions per year. NCUA also estimates it will take an FCU that receives a petition approximately 20 hours to evaluate the petition, locate relevant documents, and make them available for inspection and copying. Five petitions times 20 hours per petition equals 100 annual burden hours associated with this proposed collection of information. The Board also notes that the costs of document search and duplication will fall on the petitioners and not on the FCU.

Organizations and individuals that wish to submit comments on this information collection requirement should direct them to the Office of Information and Regulatory Affairs, OMB, Attn: Mark Menchik, Room 10226, New Executive Office Building, Washington, DC 20503, with a copy to Mary Rupp, Secretary of the Board, National Credit Union Administration, 1775 Duke Street, Alexandria, Virginia 22314–3428.

The NCUA considers comments by the public on this proposed collection of information in:

- Evaluating whether the proposed collection of information is necessary for the proper performance of the functions of the NCUA, including whether the information will have a practical use;
- Evaluating the accuracy of the NCUA's estimate of the burden of the proposed collection of information, including the validity of the methodology and assumptions used;
- Enhancing the quality, usefulness, and clarity of the information to be collected; and
- Minimizing the burden of collection of information on those who are to respond, including through the use of appropriate automated, electronic, mechanical, or other technological collection techniques or other forms of information technology; *e.g.*, permitting electronic submission of responses.

The Paperwork Reduction Act requires OMB to make a decision concerning the collection of information contained in the proposed regulation between 30 and 60 days after publication of this document in the **Federal Register**. Therefore, a comment to OMB is best assured of having its full effect if OMB receives it within 30 days of publication. This does not affect the deadline for the public to comment to the NCUA on the proposed regulation.

Executive Order 13132

Executive Order 13132 encourages independent regulatory agencies to consider the impact of their actions on state and local interests. In adherence to fundamental federalism principles, NCUA, an independent regulatory agency as defined in 44 U.S.C. 3502(5), voluntarily complies with the executive order. The proposed rule would not have substantial direct effects on the states, on the connection between the national government and the states, or on the distribution of power and responsibilities among the various levels of government. NCUA has determined that this proposed rule does not constitute a policy that has federalism implications for purposes of the executive order.

The Treasury and General Government Appropriations Act, 1999—Assessment of Federal Regulations and Policies on Families

The NCUA has determined that this proposed rule would not affect family well-being within the meaning of section 654 of the Treasury and General Government Appropriations Act, 1999, Pub. L. 105–277, 112 Stat. 2681 (1998).

List of Subjects in 12 CFR Part 701

Credit unions, Records.

By the National Credit Union Administration Board on April 12, 2007.

Mary F. Rupp,

Secretary of the Board.

Accordingly, NCUA proposes to amend 12 CFR part 701 as follows:

PART 701—ORGANIZATION AND OPERATIONS OF FEDERAL CREDIT UNIONS

1. The authority citation for part 701 continues to read as follows:

Authority: 12 U.S.C. 1752(5), 1755, 1756, 1757, 1759, 1761a, 1761b, 1766, 1767, 1782, 1784, 1787, 1789. Section 701.6 is also authorized by 15 U.S.C. 3717. Section 701.31 is also authorized by 15 U.S.C. 1601 *et seq.*; 42 U.S.C. 1981 and 3601–3610. Section 701.35 is also authorized by 42 U.S.C. 4311–4312.

2. Add § 701.3 to read as follows:

§ 701.3 Member inspection of credit union books, records, and minutes.

(a) *Member inspection rights.* A group of members of a federal credit union has the right, upon submission of a petition to the credit union as described in paragraph (b) of this section, to inspect and copy nonconfidential portions of the credit union's:

(1) Books and records of account; and

(2) Minutes of the proceedings of the credit union's members, board of directors, and committees of directors.

(b) *Petition for inspection.* The petition must describe the particular records to be inspected and state a purpose for the inspection related to the business of the credit union. The petition must state that the petitioners as a whole, or certain named petitioners, agree to pay the direct and reasonable costs associated with search and duplication of requested material. The petition must also state that the inspection is not desired for any purpose in the interest of a business or object other than the business of the credit union; that the members signing the petition have not within five years preceding the signature date sold or offered for sale, and do not now intend to sell or offer for sale, any information obtained from the credit union; and that the members signing the petition have not within the past five years aided or abetted any other person in procuring any information from the credit union for purposes of sale. The petition must name one or more members who will represent the petitioners on issues such as inspection procedures, costs, and potential disputes. At least one percent of the credit union's members, with a minimum of 20 members and a maximum of 250 members, must sign the petition.

(c) *Inspection procedures.* Within 14 days of receipt of a petition, the federal credit union must either allow inspection and copying of all requested material or inform the petitioning members in writing why it is not able to do so. Inspection may be made in person or by agent or attorney and at any reasonable time or times. Member inspection rights under this paragraph are in addition to any other member inspection rights afforded by law, regulation, or the credit union's bylaws.

(d) *Confidential books, records, and minutes.* Members do not have the right to inspect any portion of the books, records, or minutes of a federal credit union if:

(1) Federal law or regulation prohibits disclosure of that portion,

(2) The portion contains nonpublic personal information as defined in § 716.4 of this part; or

(3) The portion contains information about credit union employees or officials the disclosure of which would constitute a clearly unwarranted invasion of personal privacy. Members may, however, inspect materials describing the compensation and benefits provided by the credit union to its senior executive officers, and the qualifications of the senior executive officers, as that term is defined in § 701.14 of this part.

(e) *Costs.* A federal credit union may charge petitioners the direct and reasonable costs associated with search and duplication. The credit union may not charge for other costs, including indirect costs or attorney's fees.

(f) *Dispute resolution.* In the event of a dispute between a federal credit union and its members concerning a petition for inspection or the associated costs, either party may submit the dispute to the regional director. The regional director, after obtaining the views of both parties, will direct the credit union either to withhold the disputed materials or to make them available for member inspection and copying. The regional director may place conditions upon release, if appropriate. The decision of the regional director is a final agency decision and is not appealable to the Board.

[FR Doc. E7–7610 Filed 4–20–07; 8:45 am]

BILLING CODE 7535–01–P

NATIONAL CREDIT UNION ADMINISTRATION

12 CFR Part 708b

Disclosure of Merger Related Compensation Arrangements

AGENCY: National Credit Union Administration (NCUA).

ACTION: Proposed rule with request for comments.

SUMMARY: NCUA is issuing a proposed rule on mergers to require all federally insured credit unions to include in the merger plan submitted to NCUA a description of any arrangements providing a material increase in compensation or benefits to senior management officials in connection with the merger. The proposed rule also requires federal credit unions to disclose the existence of such compensation arrangements in the materials provided to members voting on whether to approve the merger. The proposed rule will ensure members of a merging federal credit union and NCUA are fully informed about arrangements providing for a material increase in compensation or benefits to senior management officials before considering whether to approve the merger. NCUA believes this requirement will assure merger decisions are based on the best interests of the members.

DATES: Comments must be received on or before June 22, 2007.

ADDRESSES: You may submit comments by any of the following methods (Please send comments by one method only):

- *Federal eRulemaking Portal: http://www.regulations.gov.* Follow the instructions for submitting comments.
- *NCUA Web site: http://www.ncua.gov/news/proposed_regs/proposed_regs.html.* Follow the instructions for submitting comments.
- *E-mail:* Address to *regcomments@ncua.gov*. Include ''[Your name] Comments on Proposed Rule Part 708b (Disclosure of Merger Related Compensation)'' in the e-mail subject line.
- *Fax:* (703) 518–6319. Use the subject line described above for e-mail.
- *Mail:* Address to Mary Rupp, Secretary of the Board, National Credit Union Administration, 1775 Duke Street, Alexandria, Virginia 22314–3428.
- *Hand Delivery/Courier:* Same as mail address.

FOR FURTHER INFORMATION CONTACT: Ross Kendall, Staff Attorney, Office of General Counsel, at the above address or telephone: (703) 518–6540.

SUPPLEMENTARY INFORMATION:

A. Background

The Federal Credit Union Act (Act) authorizes the NCUA Board to prescribe rules regarding mergers of federally-insured credit unions and changes in insured status and requires written approval of the Board before one or more federally-insured credit unions merge. 12 U.S.C. 1766(a), 1785(b), 1785(c), 1789(a). Part 708b of NCUA's rules implements this authority and applies to both corporate credit union and natural person credit unions. 12 CFR part 708b. The rule provides for NCUA review and approval of any merger involving a federally-insured credit union. 12 CFR 708b.104(a). Where a merging credit union is a federal credit union, members have the right to vote on whether to approve the merger, subject to one exception; NCUA may permit a merger without a member vote if it determines the FCU is in danger of insolvency and a merger will protect the National Credit Union Share Insurance Fund. 12 CFR 708b.106, 708b.105(b).

As with any maturing industry, consolidation in the nation's credit unions is occurring and is expected to continue. Efforts to increase efficiencies through improved economies of scale, along with improvements in information technology and the increasing costs associated with compliance, all contribute to the trend toward consolidation. The increasingly competitive marketplace for financial services in which credit unions operate adds additional pressure to consolidate.

Most of this consolidation is occurring through voluntary mergers of credit unions. With the increase in merger activity, some credit unions may find themselves in the position of being a potential merger partner with more than one other credit union. In this position, management of the credit union will naturally want to evaluate competing opportunities and should consider which of the potential merger partners offers the best fit, in terms of member philosophy and continued or expanded services and products for its membership.

B. Proposed Rule

The NCUA Board is concerned that prospective merger partners may seek to improperly influence the outcome of deliberations by a board of directors of the merging credit union. The support of senior management officials of a credit union considered for merger may influence a decision to approve a merger plan with a particular merger partner. Thus, a potential merger partner might agree to provide financial incentives in exchange for support from senior management.

This proposed rule would require all federally-insured credit unions to describe any financial arrangements providing a material increase in compensation or benefit to a senior management official in the merger plan submitted to the NCUA. For purposes of the disclosure requirement, the proposal defines a material increase as an increase of 15% above the official's current compensation or $10,000, whichever is greater. Compensation includes salary as well as any indirect compensation such as bonus, deferred compensation or other financial reward. NCUA would determine, on a case by case basis, whether to request further details about an arrangement in connection with its review of the merger plan.

Where a merging credit union is federally chartered, the proposal would also require disclosure of the existence of a material increase in compensation to its members before their vote on the merger. State law governs whether members of a state-chartered credit union are entitled to vote; therefore, NCUA is only proposing this requirement for federal credit unions. Any individual member of a federal credit union wishing to review the details of the arrangement would be entitled to inspect the credit union's records detailing the arrangement. The inspection would be at an office of the credit union during regular business hours and a member requesting it would need to submit a request in writing to the credit union at least one day before the date announced for the meeting called for the purpose of voting on the merger.

NCUA notes that the proposed creation of a member inspection right in the context of merger related compensation arrangements is specific to these limited circumstances. Simultaneously with the adoption of this proposal, NCUA is also proposing a broader, more general rule to govern member access to federal credit union records. In accordance with settled rules of construction, a more specific provision in a rule takes precedence over a broader provision of general applicability. Norman j. Singer, statutes and statutory construction, § 51.05 (6th Ed., 2000). Thus, a member asserting a right to review documents relating to merger related compensation would be entitled to follow the procedures outlined in this rule and not the general procedures relating to member access to records.

The proposed rule would permit a member to review merger related compensation records without making or retaining copies at ''an'' office of the credit union, including branch office locations. The Board recognizes that requested documents may be at a credit union office at some distance from where members may live and that conducting a review may be difficult or expensive for members. The Board expects credit unions and their members to work out reasonable arrangements about how a review can take place that are mutually acceptable. For example, a credit union may agree to provide photocopies to a branch office location convenient to the member. The Board solicits comment on this subject.

The NCUA Board believes this proposed rule will help assure that management's decision to recommend a merger is based on sound business judgment reflecting the best interests of the members. The Board also notes the proposal tracks an Office of Thrift Supervision (OTS) regulation that requires disclosure of officer compensation, among other matters, in a merging thrift's merger approval application; the OTS rule states an increase in compensation paid to an officer, director or controlling person of a merging federal thrift or savings bank is presumed to be unreasonable and a sale of control if it exceeds the greater of 15% or $10,000. 12 CFR 563.22(d)(1)(vi)(C). The Board also notes comparable disclosure requirements relating to economic benefits for directors and senior management officials are in NCUA's rule on conversions of insured credit unions to mutual savings banks. 12 CFR 708a.4(d)(1)(iii).

The proposed rule addresses arrangements providing material economic benefits to board members or senior management officials of the merging credit union. The NCUA Board believes these individuals are most likely to be in a position to negotiate personally advantageous compensation arrangements. The Board also understands retention agreements and bonuses for persons holding managerial or technical positions may be essential for a successful merger, and the proposed rule does not prohibit offering retention agreements or bonuses that a continuing credit union believes are appropriate, including arrangements affecting senior management officials. In this respect, the Board notes it does not intend to substitute its business judgment for that of the boards of the merging and continuing credit unions on marketplace demands and reasonable compensation arrangements. The proposed rule change focuses on

transparency and the principle that full disclosure usually results in more informed and better membership decisions.

The Board recognizes that, in some cases, officials of the merging credit union may be retained by the continuing credit union and assigned additional duties with greater responsibilities. In those cases, the continuing credit union may offer to pay officials relatively greater compensation than they earned with the merging credit union. Credit unions should be able to support these types of increases in compensation, bonuses, or retention agreements in the required disclosures. The proposed rule would simply require a description of these arrangements in the merger plan and, in the case of a merging federal credit union, disclosure of their existence to the membership before their vote on approving the merger.

State law governs whether members of a merging state chartered credit union are entitled to vote on a proposed merger. If a state law requires a state supervisory authority's approval, NCUA's rule requires evidence that the state supervisory authority has approved the merger as part of the material submitted to the appropriate Regional Director. 12 CFR 708b.104(a)(6). For corporate credit unions, the NCUA Merger and Conversion Manual specifies that credit unions submit their merger requests to NCUA's Office of Corporate Credit Unions. NCUA 8056/M 6300 (June 2005).

C. Proposed Amendments

Definitions. The proposal adds two new definitions to the rule. ''Merger related financial arrangement'' is defined to mean an increase in direct or indirect compensation of 15% or $10,000, whichever is greater, that any board member or senior management official of a merging credit union may receive in connection with a merger transaction. Such an increase is considered material and would need to be disclosed. The term does not include an agreement to retain a senior management official in a comparable managerial role with the continuing credit union, so long as the agreement is limited to retention and does not include any financial component resulting in a material increase, as defined, above the official's existing compensation package. The second new definition, ''senior management official,'' includes the chief executive officer (who may hold the title of president or treasurer/manager), any assistant chief executive officer, and the chief financial officer. This definition conforms to other NCUA rules affecting members of senior management of credit unions; *see,* e.g., 12 CFR part 703.

Disclosures. The proposed rule would add to the rule's provisions describing the merger plan and the approval of the merger proposal by members of the merging credit union. 12 CFR 708b.103(a), 106(a)(2). The new provisions require financial arrangements providing a material increase in compensation or benefits for senior management officials and related to a merger to be described in the merger plan and, in the case of a merging federal credit union, disclosed to the membership in the balloting materials. These disclosure obligations would only be triggered where the proposed financial arrangement results in an increase in compensation equal to 15% or $10,000, whichever is greater. Furthermore, the rule would simply require that the disclosure to the members indicate the existence of a material financial arrangement involving one or more senior management officials. Any individual member would be entitled to inspect the credit union's records pertaining to the arrangement, at the credit union's office during business hours.

Regulatory Procedures

Regulatory Flexibility Act

The Regulatory Flexibility Act requires NCUA to prepare an analysis to describe any significant economic impact a proposed rule may have on a substantial number of small credit unions (those under ten million dollars in assets). Most of the mergers of federal credit unions involve small credit unions. In almost all cases, the small credit union merges into a much larger continuing credit union. The larger credit union is available to assist the small credit union with each step in the merger process, keeping the economic impact on the small credit union to a minimum. Accordingly, the Board does not anticipate that this proposed rule would have a significant economic impact on a substantial number of small credit unions, and, therefore, a regulatory flexibility analysis is not required.

Paperwork Reduction Act

The proposed changes to part 708b contain information collection requirements. As required by the Paperwork Reduction Act of 1995 (44 U.S.C. 3507(d)), NCUA is submitting a copy of this proposed rule as part of an information collection package to the Office of Management and Budget (OMB) for its review and approval for revision of Collection of Information, Mergers of Federally Insured Credit Unions, Control Number 3133–0024.

The proposed changes ensure that NCUA has sufficient information to determine whether to approve a proposed merger. The changes would also help ensure, in the case of a merging federal credit union, that members have sufficient and accurate information to exercise their vote properly concerning the proposed merger.

In the five-year period ending June 30, 2006, NCUA approved 1,567 mergers involving federally insured credit unions. On average for the past five years, therefore, there were approximately 313 mergers each year that would be covered by the proposed rule. NCUA estimates less than one percent of these mergers will involve merger related financial arrangements as defined in the proposed rule. NCUA estimates it will take the merging credit unions about five hours to describe any merger related financial arrangements and include the description in the merger plan and, in cases involving a merging federal credit union, to make materials available to members upon request. One percent of 313, treating the two merging credit unions as one respondent, or 3.1 times five hours per respondent equals sixteen (rounding up from fifteen and one-half) total annual burden hours associated with this revision to the existing collection of information associated with this rule, OMB Control Number 3133–0024.

Total Annual Burden Hours = Sixteen

The Paperwork Reduction Act and OMB regulations require that the public be provided an opportunity to comment on the paperwork requirements, including an agency's estimate of the burden of the paperwork requirements. The NCUA Board invites comment on: (1) Whether the paperwork requirements are necessary; (2) the accuracy of NCUA's estimates on the burden of the paperwork requirements; (3) ways to enhance the quality, utility, and clarity of the paperwork requirements; and (4) ways to minimize the burden of the paperwork requirements.

Comments should be sent to: OMB Reports Management Branch, New Executive Office Building, Room 10202, Washington, DC 20503; Attention: Mark Menchik, Desk Officer for NCUA. Please send NCUA a copy of any comments submitted to OMB.

The Paperwork Reduction Act requires OMB to make a decision concerning the collection of information

contained in these proposed regulations between 30 and 60 days after publication of this document in the **Federal Register**. Therefore, a comment to OMB is best assured of having its full effect if OMB receives it within 30 days of publication. This does not affect the deadline for the public to comment to the NCUA on the proposed regulations.

Executive Order 13132

Executive Order 13132 encourages independent regulatory agencies to consider the impact of their actions on state and local interests. In adherence to fundamental federalism principles, NCUA, an independent regulatory agency as defined in 44 U.S.C. 3502(5), voluntarily complies with the executive order. The proposed rule would not have substantial direct effects on the states, on the connection between the national government and the states, or on the distribution of power and responsibilities among the various levels of government. NCUA has determined that this proposed rule does not constitute a policy that has federalism implications for purposes of the executive order.

The Treasury and General Government Appropriations Act, 1999—Assessment of Federal Regulations and Policies on Families

The NCUA has determined that this proposed rule would not affect family well-being within the meaning of § 654 of the Treasury and General Government Appropriations Act, 1999, Pub. L. 105–277, 112 Stat. 2681 (1998).

List of Subjects 12 CFR Part 708b

Credit unions, Mergers of credit unions, Reporting and recordkeeping requirements.

By the National Credit Union Administration Board on April 12, 2007.

Mary F. Rupp,

Secretary of the Board.

For the reasons stated above, NCUA proposes to amend 12 CFR part 708b as follows:

PART 708b—MERGERS OF FEDERALLY-INSURED CREDIT UNIONS; VOLUNTARY TERMINATION OR CONVERSION OF INSURED STATUS

1. The authority citation for part 708b continues to read as follows:

Authority: 12 U.S.C. 1766(a), 1785(b), 1785(c), and 1789(a).

2. Amend § 708b.2 by removing current alphabetical paragraph designations (a) through (k) and adding new definitions of ''merger related financial arrangement'' and ''senior management official'' in alphabetical order to read as follows:

§ 708b.2 Definitions.

* * * * *

Merger related financial arrangement means a material increase in compensation (including indirect compensation, for example, bonuses, deferred compensation, or other financial rewards) or benefits that any board member or senior management official of a merging credit union may receive in connection with a merger transaction. For purposes of this definition, a material increase is an increase of 15% or $10,000, whichever is greater.

* * * * *

Senior management official means the chief executive officer (who may hold the title of president or treasurer/manager), any assistant chief executive officer, and the chief financial officer.

* * * * *

3. Amend § 708b.103 by redesignating paragraphs (a)(7) through (10) as paragraphs (a)(8) through (11) and adding new paragraph (a)(7) to read as follows:

§ 708b.103 Preparation of merger plan.

(a) * * *

(7) Description of any merger related financial arrangement, as defined in § 708b.2.

* * * * *

4. Amend § 708b.106:

A. By removing the semicolon at the end of paragraph (a)(2)(ii) and adding '',and disclosure of the existence of any merger related financial arrangement, as defined in § 708b.2;'' and

B. By adding a new paragraph (a)(2)(vii) to read as follows:

§ 708b.106 Approval of the merger proposal by numbers.

(a) * * *

(2) * * *

(vii) Inform the members they have the right to inspect the credit union's records pertaining to any merger related financial arrangement, as defined in § 708b.2, by submitting a request in writing to the credit union at least one day before the date announced for the meeting called for the purpose of voting on the merger. The inspection must occur at an office of the credit union during regular business hours and is limited to the right to review pertinent documents on site, without making or retaining copies.

* * * * *

[FR Doc. E7–7608 Filed 4–20–07; 8:45 am]

BILLING CODE 7535–01–P

DEPARTMENT OF TRANSPORTATION

Federal Aviation Administration

14 CFR Part 39

[Docket No. FAA–2006–26494; Directorate Identifier 2006–CE–79–AD]

RIN 2120–AA64

Airworthiness Directives; Alpha Aviation Design Limited (Type Certificate No. A48EU Previously Held by APEX Aircraft and AVIONS PIERRE ROBIN) Model R2160 Airplanes

AGENCY: Federal Aviation Administration (FAA), Department of Transportation (DOT).

ACTION: Supplemental notice of proposed rulemaking (NPRM); reopening of the comment period.

SUMMARY: We are revising an earlier NPRM for the products listed above. This proposed AD results from mandatory continuing airworthiness information (MCAI) originated by an aviation authority of another country to identify and correct an unsafe condition on an aviation product. The MCAI describes the unsafe condition as:

* * * unchecked corrosion developing on the wing spars due to access for inspections being difficult under normal maintenance practices, which could lead to an unsafe condition and possibly a catastrophic failure of the wing * * *

The proposed AD would require actions that are intended to address the unsafe condition described in the MCAI.

DATES: We must receive comments on this proposed AD by May 23, 2007.

ADDRESSES: You may send comments by any of the following methods:

- *DOT Docket Web site:* Go to *http://dms.dot.gov* and follow the instructions for sending your comments electronically.
- *Fax:* (202) 493–2251.
- *Mail:* Docket Management Facility, U.S. Department of Transportation, 400 Seventh Street, SW., Nassif Building, Room PL–401, Washington, DC 20590–0001.
- *Hand Delivery:* Room PL–401 on the plaza level of the Nassif Building, 400 Seventh Street, SW., Washington, DC, between 9 a.m. and 5 p.m., Monday through Friday, except Federal holidays.
- *Federal eRulemaking Portal: http://www.regulations.gov*. Follow the instructions for submitting comments.

Examining the AD Docket

You may examine the AD docket on the Internet at *http://dms.dot.gov*; or in person at the Docket Management Facility between 9 a.m. and 5 p.m.,

Monday through Friday, except Federal holidays. The AD docket contains this proposed AD, the regulatory evaluation, any comments received, and other information. The street address for the Docket Office (telephone (800) 647–5227) is in the **ADDRESSES** section. Comments will be available in the AD docket shortly after receipt.

FOR FURTHER INFORMATION CONTACT: Karl Schletzbaum, Aerospace Engineer, FAA, Small Airplane Directorate, 901 Locust, Room 301, Kansas City, Missouri 64106; telephone: (816) 329–4146; fax: (816) 329–4090.

SUPPLEMENTARY INFORMATION:

Streamlined Issuance of AD

The FAA is implementing a new process for streamlining the issuance of ADs related to MCAI. This streamlined process will allow us to adopt MCAI safety requirements in a more efficient manner and will reduce safety risks to the public. This process continues to follow all FAA AD issuance processes to meet legal, economic, Administrative Procedure Act, and **Federal Register** requirements. We also continue to meet our technical decision-making responsibilities to identify and correct unsafe conditions on U.S.-certificated products.

This proposed AD references the MCAI and related service information that we considered in forming the engineering basis to correct the unsafe condition. The proposed AD contains text copied from the MCAI and for this reason might not follow our plain language principles.

Comments Invited

We invite you to send any written relevant data, views, or arguments about this proposed AD. Send your comments to an address listed under the **ADDRESSES** section. Include ''Docket No. FAA–2006–26494; Directorate Identifier 2006–CE–79–AD'' at the beginning of your comments. We specifically invite comments on the overall regulatory, economic, environmental, and energy aspects of this proposed AD. We will consider all comments received by the closing date and may amend this proposed AD because of those comments.

We will post all comments we receive, without change, to *http://dms.dot.gov*, including any personal information you provide. We will also post a report summarizing each substantive verbal contact we receive about this proposed AD.

Discussion

We proposed to amend 14 CFR part 39 with an earlier NPRM for the specified products, which was published in the **Federal Register** on February 6, 2007 (72 FR 5364). That earlier NPRM proposed to require actions intended to address the unsafe condition for the products listed above.

Since that NPRM was issued, we learned that the original New Zealand AD has been amended.

The Civil Aviation Authority of New Zealand, which is the airworthiness authority for New Zealand, has issued AD DCA/R2000/37A, dated December 21, 2006 (referred to after this as ''the MCAI''), to correct an unsafe condition for the specified products. The MCAI states:

> which could lead to an unsafe condition and possibly a catastrophic failure of the wing accomplish the following:

The MCAI requires inspecting the visible parts of the spar web and the upper and lower boom angles (top and bottom spar caps) for corrosion and correcting as necessary.

You may obtain further information by examining the MCAI in the AD docket.

Relevant Service Information

AVIONS PIERRE ROBIN issued Avions Pierre Robin Service Letter No. 19, dated October 1980; and Avions Pierre Robin Service Bulletin No. 99, dated June 24, 1983. The actions described in this service information are intended to correct the unsafe condition identified in the MCAI.

Comments

We received no comments on the earlier NPRM.

FAA's Determination and Requirements of the Proposed AD

This product has been approved by the aviation authority of another country, and is approved for operation in the United States. Pursuant to our bilateral agreement with this State of Design Authority, they have notified us of the unsafe condition described in the MCAI and service information referenced above. We are proposing this AD because we evaluated all information and determined the unsafe condition exists and is likely to exist or develop on other products of the same type design.

Certain changes described above expand the scope of the earlier NPRM. As a result, we have determined that it is necessary to reopen the comment period to provide additional opportunity for the public to comment on the proposed AD.

Differences Between This Proposed AD and the MCAI or Service Information

We have reviewed the MCAI and related service information and, in general, agree with their substance. But we might have found it necessary to use different words from those in the MCAI to ensure the AD is clear for U.S. operators and is enforceable. In making these changes, we do not intend to differ substantively from the information provided in the MCAI and related service information.

We might also have proposed different actions in this AD from those in the MCAI in order to follow FAA policies. Any such differences are highlighted in a note within the proposed AD. These requirements, if ultimately adopted, will take precedence over the actions copied from the MCAI.

Costs of Compliance

Based on the service information, we estimate that this proposed AD would affect about 10 products of U.S. registry. We also estimate that it would take about 28 work-hours per product to comply with the proposed AD. The average labor rate is $80 per work-hour.

Based on these figures, we estimate the cost of the proposed AD on U.S. operators to be $22,400, or $2,240 per product.

We have no way of determining the number of products that may need any necessary follow-on actions. Since the corrosion damage would vary from airplane to airplane, we are not able to estimate the costs of each follow-on action.

Authority for This Rulemaking

Title 49 of the United States Code specifies the FAA's authority to issue rules on aviation safety. Subtitle I, section 106, describes the authority of the FAA Administrator. ''Subtitle VII: Aviation Programs,'' describes in more detail the scope of the Agency's authority.

We are issuing this rulemaking under the authority described in ''Subtitle VII, Part A, Subpart III, Section 44701: General requirements.'' Under that section, Congress charges the FAA with promoting safe flight of civil aircraft in air commerce by prescribing regulations for practices, methods, and procedures the Administrator finds necessary for safety in air commerce. This regulation is within the scope of that authority because it addresses an unsafe condition that is likely to exist or develop on products identified in this rulemaking action.

Regulatory Findings

We determined that this proposed AD would not have federalism implications under Executive Order 13132. This proposed AD would not have a substantial direct effect on the States, on the relationship between the national Government and the States, or on the distribution of power and responsibilities among the various levels of government.

For the reasons discussed above, I certify this proposed regulation:

1. Is not a ''significant regulatory action'' under Executive Order 12866;

2. Is not a ''significant rule'' under the DOT Regulatory Policies and Procedures (44 FR 11034, February 26, 1979); and

3. Will not have a significant economic impact, positive or negative, on a substantial number of small entities under the criteria of the Regulatory Flexibility Act.

We prepared a regulatory evaluation of the estimated costs to comply with this proposed AD and placed it in the AD docket.

List of Subjects in 14 CFR Part 39

Air transportation, Aircraft, Aviation safety, Safety.

The Proposed Amendment

Accordingly, under the authority delegated to me by the Administrator, the FAA proposes to amend 14 CFR part 39 as follows:

PART 39—AIRWORTHINESS DIRECTIVES

1. The authority citation for part 39 continues to read as follows:

Authority: 49 U.S.C. 106(g), 40113, 44701.

§ 39.13 [Amended]

2. The FAA amends § 39.13 by adding the following new AD:

Alpha Aviation Design Limited (Type Certificate No. A48EU previously held by APEX Aircraft and AVIONS PIERRE ROBIN): Docket No. FAA–2006–26494; Directorate Identifier 2006–CE–79–AD.

Comments Due Date

(a) We must receive comments by May 23, 2007.

Affected ADs

(b) None.

Applicability

(c) This AD applies to Model R2160 airplanes, serial numbers 001 through 378, certificated in any category.

Subject

(d) *Air Transport Association of America (ATA) Code 57:* Wings.

Reason

(e) The mandatory continuing airworthiness information (MCAI) states:

To prevent unchecked corrosion developing on the wing spars due to access for inspections being difficult under normal maintenance practices, which could lead to an unsafe condition and possibly a catastrophic failure of the wing accomplish the following:

The MCAI requires inspecting the visible parts of the spar web and the upper and lower boom angles (top and bottom spar caps) for corrosion and correcting as necessary.

Actions and Compliance

(f) Unless already done, do the following actions. Accomplishment of European Aviation Safety Agency (EASA) AD 2005–0028 satisfies the requirement of this AD:

(1) Within 66 months after aircraft date of manufacture or within 6 months after the effective date of this AD, whichever occurs later, unless already done within the last 24 months, and thereafter at intervals not to exceed 24 months, remove the main landing gear legs and all the wing inspection panels following the instructions in the aircraft maintenance manual and inspect the visible parts of the spar web and the upper and lower boom angles (top and bottom spar caps), following Avions Pierre Robin Service Letter No. 19, dated October 1980; and Avions Pierre Robin Service Bulletin No. 99, dated June 24, 1983. If the spars are replaced, the inspections at intervals of 24 months must be resumed within 60 months from the date of replacement.

(2) Before further flight, if corrosion is found on the rear face of the spar web or the upper and lower boom angles, then inspect the front face of the spar for corrosion following Avions Pierre Robin Service Letter No. 19, dated October 1980; and Avions Pierre Robin Service Bulletin No. 99, dated June 24, 1983. It may be necessary to cut inspection holes or remove the wings to inspect the front face of the spar. Inspection holes must be prepared to a manufacturer-approved repair scheme.

(3) Before further flight, treat corrosion following Avions Pierre Robin Service Letter No. 19, dated October 1980; and Avions Pierre Robin Service Bulletin No. 99, dated June 24, 1983.

(4) Before further flight, if corrosion is found which exceeds the limits specified in Avions Pierre Robin Service Letter No. 19, dated October 1980, repair following an approved repair scheme.

FAA AD Differences

Note: This AD differs from the MCAI and/or service information as follows: No differences.

Other FAA AD Provisions

(g) The following provisions also apply to this AD:

(1) *Alternative Methods of Compliance (AMOCs):* The Manager, Standards Staff, FAA, ATTN: Karl Schletzbaum, Aerospace Engineer, FAA, Small Airplane Directorate, 901 Locust, Room 301, Kansas City, Missouri 64106; telephone: (816) 329–4146; fax: (816) 329–4090, has the authority to approve AMOCs for this AD, if requested using the procedures found in 14 CFR 39.19. Before using any approved AMOC on any airplane to which the AMOC applies, notify your appropriate principal inspector (PI) in the FAA Flight Standards District Office (FSDO), or lacking a PI, your local FSDO.

(2) *Airworthy Product:* For any requirement in this AD to obtain corrective actions from a manufacturer or other source, use these actions if they are FAA-approved. Corrective actions are considered FAA-approved if they are approved by the State of Design Authority (or their delegated agent). You are required to assure the product is airworthy before it is returned to service.

(3) *Reporting Requirements:* For any reporting requirement in this AD, under the provisions of the Paperwork Reduction Act (44 U.S.C. 3501 et seq.), the Office of Management and Budget (OMB) has approved the information collection requirements and has assigned OMB Control Number 2120–0056.

Related Information

(h) Refer to MCAI Civil Aviation Authority of New Zealand AD DCA/R2000/37A, dated December 21, 2006; Avions Pierre Robin Service Letter No. 19, dated October 1980; and Avions Pierre Robin Service Bulletin No. 99, dated June 24, 1983, for related information.

Issued in Kansas City, Missouri, on April 17, 2007.

Charles L. Smalley,

Acting Manager, Small Airplane Directorate, Aircraft Certification Service.

[FR Doc. E7–7644 Filed 4–20–07; 8:45 am]

BILLING CODE 4910–13–P

DEPARTMENT OF TRANSPORTATION

Federal Aviation Administration

14 CFR Part 39

[Docket No. FAA–2007–27431; Directorate Identifier 2007–CE–016–AD]

RIN 2120–AA64

Airworthiness Directives; Stemme GmbH & Co. KG Models STEMME S10–V and STEMME S10–VT Powered Sailplanes

AGENCY: Federal Aviation Administration (FAA), Department of Transportation (DOT).

ACTION: Notice of proposed rulemaking (NPRM).

SUMMARY: We propose to adopt a new airworthiness directive (AD) for the products listed above. This proposed AD results from mandatory continuing airworthiness information (MCAI) originated by an aviation authority of another country to identify and correct an unsafe condition on an aviation

product. The MCAI describes the unsafe condition as:

> Service experience showed that the connection screw of the propeller blade follower type 10AP–VM may break and the main part of the blade follower can be lost in flight. This condition, if not corrected, could lead to high vibration during powered flight and consequently result in decreased control of the aircraft.
>
> Stemme has developed a new blade follower, Model 10AP–VP, which is reinforced on the shaft and has an Allen head screw installed instead of a slotted screw. For the reason stated above, this Emergency Airworthiness Directive (EAD) requires the replacement of the blade follower type 10AP–VM with the new type 10AP–VP.
>
> This EAD has been revised to correct the TCDS reference and the applicability statement. No separate TC was issued for the affected propellers. These propellers are part of the aircraft type design.
>
> Paragraph (4) of the ''Compliance'' section of this EAD has been corrected.

The proposed AD would require actions that are intended to address the unsafe condition described in the MCAI.

DATES: We must receive comments on this proposed AD by May 23, 2007.

ADDRESSES: You may send comments by any of the following methods:

- *DOT Docket Web site:* Go to *http://dms.dot.gov* and follow the instructions for sending your comments electronically.
- *Fax:* (202) 493–2251.
- *Mail:* Docket Management Facility, U.S. Department of Transportation, 400 Seventh Street, SW., Nassif Building, Room PL–401, Washington, DC 20590–0001.
- *Hand Delivery:* Room PL–401 on the plaza level of the Nassif Building, 400 Seventh Street, SW., Washington, DC, between 9 a.m. and 5 p.m., Monday through Friday, except Federal holidays.
- *Federal eRulemaking Portal:* Go to *http://www.regulations.gov.* Follow the instructions for submitting comments.

Examining the AD Docket

You may examine the AD docket on the Internet at *http://dms.dot.gov;* or in person at the Docket Management Facility between 9 a.m. and 5 p.m., Monday through Friday, except Federal holidays. The AD docket contains this proposed AD, the regulatory evaluation, any comments received, and other information. The street address for the Docket Office (telephone (800) 647–5227) is in the **ADDRESSES** section. Comments will be available in the AD docket shortly after receipt.

FOR FURTHER INFORMATION CONTACT: Gregory Davison, Aerospace Engineer, FAA, Small Airplane Directorate, 901 Locust, Room 301, Kansas City, Missouri 64106; telephone: (816) 329–4130; fax: (816) 329–4090.

SUPPLEMENTARY INFORMATION:

Streamlined Issuance of AD

The FAA is implementing a new process for streamlining the issuance of ADs related to MCAI. This streamlined process will allow us to adopt MCAI safety requirements in a more efficient manner and will reduce safety risks to the public. This process continues to follow all FAA AD issuance processes to meet legal, economic, Administrative Procedure Act, and **Federal Register** requirements. We also continue to meet our technical decision-making responsibilities to identify and correct unsafe conditions on U.S.-certificated products.

This proposed AD references the MCAI and related service information that we considered in forming the engineering basis to correct the unsafe condition. The proposed AD contains text copied from the MCAI and for this reason might not follow our plain language principles.

Comments Invited

We invite you to send any written relevant data, views, or arguments about this proposed AD. Send your comments to an address listed under the **ADDRESSES** section. Include ''Docket No. FAA–2007–27431; Directorate Identifier 2007–CE–016–AD'' at the beginning of your comments. We specifically invite comments on the overall regulatory, economic, environmental, and energy aspects of this proposed AD. We will consider all comments received by the closing date and may amend this proposed AD because of those comments.

We will post all comments we receive, without change, to *http://dms.dot.gov,* including any personal information you provide. We will also post a report summarizing each substantive verbal contact we receive about this proposed AD.

Discussion

The European Aviation Safety Agency (EASA), which is the Technical Agent for the Member States of the European Community, has issued EASA Emergency AD No. 2006–0373R1–E, dated December 15, 2006, corrected January 5, 2007 (referred to after this as ''the MCAI''), to correct an unsafe condition for the specified products. The MCAI states:

> Service experience showed that the connection screw of the propeller blade follower type 10AP–VM may break and the main part of the blade follower can be lost in flight. This condition, if not corrected, could lead to high vibration during powered flight and consequently result in decreased control of the aircraft.
>
> Stemme has developed a new blade follower, Model 10AP–VP, which is reinforced on the shaft and has an Allen head screw installed instead of a slotted screw. For the reason stated above, this Emergency Airworthiness Directive (EAD) requires the replacement of the blade follower type 10AP–VM with the new type 10AP–VP.
>
> This EAD has been revised to correct the TCDS reference and the applicability statement. No separate TC was issued for the affected propellers. These propellers are part of the aircraft type design.
>
> Paragraph (4) of the ''Compliance'' section of this EAD has been corrected.

You may obtain further information by examining the MCAI in the AD docket.

Relevant Service Information

Stemme GmbH & Co. KG has issued STEMME F & D Service Bulletin (SB) A31–10–078, Am.-Index: 01.a, dated November 6, 2006. The actions described in this service information are intended to correct the unsafe condition identified in the MCAI.

FAA's Determination and Requirements of the Proposed AD

This product has been approved by the aviation authority of another country, and is approved for operation in the United States. Pursuant to our bilateral agreement with this State of Design Authority, they have notified us of the unsafe condition described in the MCAI and service information referenced above. We are proposing this AD because we evaluated all information and determined the unsafe condition exists and is likely to exist or develop on other products of the same type design.

Differences Between This Proposed AD and the MCAI or Service Information

We have reviewed the MCAI and related service information and, in general, agree with their substance. But we might have found it necessary to use different words from those in the MCAI to ensure the AD is clear for U.S. operators and is enforceable. In making these changes, we do not intend to differ substantively from the information provided in the MCAI and related service information.

We might also have proposed different actions in this AD from those in the MCAI in order to follow FAA policies. Any such differences are highlighted in a note within the proposed AD.

Costs of Compliance

Based on the service information, we estimate that this proposed AD would

affect about 53 products of U.S. registry. We also estimate that it would take about 3 work-hours per product to comply with the basic requirements of this proposed AD. The average labor rate is $80 per work-hour. Required parts would cost about $117 per product. Where the service information lists required parts costs that are covered under warranty, we have assumed that there will be no charge for these costs. As we do not control warranty coverage for affected parties, some parties may incur costs higher than estimated here.

Based on these figures, we estimate the cost of the proposed AD on U.S. operators to be $18,921, or $357 per product.

Authority for This Rulemaking

Title 49 of the United States Code specifies the FAA's authority to issue rules on aviation safety. Subtitle I, section 106, describes the authority of the FAA Administrator. ''Subtitle VII: Aviation Programs,'' describes in more detail the scope of the Agency's authority.

We are issuing this rulemaking under the authority described in ''Subtitle VII, Part A, Subpart III, Section 44701: General requirements.'' Under that section, Congress charges the FAA with promoting safe flight of civil aircraft in air commerce by prescribing regulations for practices, methods, and procedures the Administrator finds necessary for safety in air commerce. This regulation is within the scope of that authority because it addresses an unsafe condition that is likely to exist or develop on products identified in this rulemaking action.

Regulatory Findings

We determined that this proposed AD would not have federalism implications under Executive Order 13132. This proposed AD would not have a substantial direct effect on the States, on the relationship between the national Government and the States, or on the distribution of power and responsibilities among the various levels of government.

For the reasons discussed above, I certify this proposed regulation:

1. Is not a ''significant regulatory action'' under Executive Order 12866;

2. Is not a ''significant rule'' under the DOT Regulatory Policies and Procedures (44 FR 11034, February 26, 1979); and

3. Will not have a significant economic impact, positive or negative, on a substantial number of small entities under the criteria of the Regulatory Flexibility Act.

We prepared a regulatory evaluation of the estimated costs to comply with this proposed AD and placed it in the AD docket.

List of Subjects in 14 CFR Part 39

Air transportation, Aircraft, Aviation safety, Safety.

The Proposed Amendment

Accordingly, under the authority delegated to me by the Administrator, the FAA proposes to amend 14 CFR part 39 as follows:

PART 39—AIRWORTHINESS DIRECTIVES

1. The authority citation for part 39 continues to read as follows:

Authority: 49 U.S.C. 106(g), 40113, 44701.

§ 39.13 [Amended]

2. The FAA amends § 39.13 by adding the following new AD:

Stemme GmbH & Co. KG Models STEMME S10–V and STEMME S10–VT Powered Sailplanes: Docket No. FAA–2007–27431; Directorate Identifier 2007–CE–016–AD.

Comments Due Date

(a) We must receive comments by May 23, 2007.

Affected ADs

(b) None.

Applicability

(c) This AD applies to Models STEMME S10–V and STEMME S10–VT powered sailplanes, all serial numbers, certificated in any category.

Subject

(d) Air Transport Association of America (ATA) Code 61: Propellers.

Reason

(e) The mandatory continuing airworthiness information (MCAI) states: Service experience showed that the connection screw of the propeller blade follower type 10AP–VM may break and the main part of the blade follower can be lost in flight. This condition, if not corrected, could lead to high vibration during powered flight and consequently result in decreased control of the aircraft.

Stemme has developed a new blade follower, Model 10AP–VP, which is reinforced on the shaft and has an Allen head screw installed instead of a slotted screw. For the reason stated above, this Emergency Airworthiness Directive (EAD) requires the replacement of the blade follower type 10AP–VM with the new type 10AP–VP.

This EAD has been revised to correct the TCDS reference and the applicability statement. No separate TC was issued for the affected propellers. These propellers are part of the aircraft type design.

Paragraph (4) of the ''Compliance'' section of this EAD has been corrected.

Actions and Compliance

(f) Unless already done, within 25 engine operating hours or 90 days after the effective date of this AD, whichever occurs first, do the following actions:

(1) Replace the blade follower type 10AP–VM with the new type 10AP–VP following the instructions contained in STEMME F & D SB A31–10–078, Am.-index: 01.a, dated November 6, 2006.

(2) As of 25 engine operating hours or 90 days after the effective date of this AD, do not install a propeller type 10AP–F, 10AP–V or 11AP–V on any aircraft, unless that propeller has the new type 10AP–VP blade follower installed following the instructions contained in STEMME F & D SB A31–10–078, Am.-index: 01.a, dated November 6, 2006.

FAA AD Differences

Note: This AD differs from the MCAI and/or service information as follows: The MCAI requires an amendment to the aircraft flight manual before further flight as an interim requirement to the replacement. We consider before flight as an urgent safety of flight compliance time, and we do not consider this unsafe condition to be an urgent safety of flight condition. We feel that 25 engine operating hours or 90 days, whichever occurs first, for the replacement is an adequate compliance for this AD action and meets the FAA requirements of a notice of proposed rulemaking (NPRM). We do encourage you to incorporate these flight manual amendments referenced in the MCAI and service information until you replace the propeller blade follower.

Other FAA AD Provisions

(g) The following provisions also apply to this AD:

(1) *Alternative Methods of Compliance (AMOCs):* The Manager, Standards Staff, FAA, ATTN: Gregory Davison, Aerospace Engineer, FAA, Small Airplane Directorate, 901 Locust, Room 301, Kansas City, Missouri, 64106; telephone: (816) 329–4130; fax: (816) 329–4090, has the authority to approve AMOCs for this AD, if requested using the procedures found in 14 CFR 39.19. Before using any approved AMOC on any airplane to which the AMOC applies, notify your appropriate principal inspector (PI) in the FAA Flight Standards District Office (FSDO), or lacking a PI, your local FSDO.

(2) *Airworthy Product:* For any requirement in this AD to obtain corrective actions from a manufacturer or other source, use these actions if they are FAA-approved. Corrective actions are considered FAA-approved if they are approved by the State of Design Authority (or their delegated agent). You are required to assure the product is airworthy before it is returned to service.

(3) *Reporting Requirements:* For any reporting requirement in this AD, under the provisions of the Paperwork Reduction Act (44 U.S.C. 3501 et.seq.), the Office of Management and Budget (OMB) has approved the information collection requirements and has assigned OMB Control Number 2120–0056.

Related Information

(h) Refer to MCAI European Aviation Safety Agency (EASA) Emergency AD No.: 2006–0373R1–E, dated December 15, 2006, corrected January 5, 2007; and STEMME F & D SB A31–10–078, Am.-index: 01.a, dated November 6, 2006, for related information.

Issued in Kansas City, Missouri, on April 17, 2007.

Charles L. Smalley,

Acting Manager, Small Airplane Directorate, Aircraft Certification Service.

[FR Doc. E7–7642 Filed 4–20–07; 8:45 am]

BILLING CODE 4910–13–P

DEPARTMENT OF TRANSPORTATION

Federal Aviation Administration

14 CFR Part 39

[Docket No. FAA–2007–27229; Directorate Identifier 2007–NE–03–AD]

RIN 2120–AA64

Airworthiness Directives; CFM International, S.A. CFM56–7B Series Turbofan Engines

AGENCY: Federal Aviation Administration (FAA), Department of Transportation (DOT).

ACTION: Notice of proposed rulemaking (NPRM).

SUMMARY: The FAA proposes to adopt a new airworthiness directive (AD) for CFM International, S.A. CFM56–7B Series Turbofan Engines. This proposed AD would require revising the Airworthiness Limitations Section (ALS) in the Engine Shop Manual (ESM) and the air carrier's approved continuous airworthiness maintenance program (CAMP) to add mandatory inspections of certain low pressure turbine rear frames (TRFs) to the ALS or CAMP. This proposed AD results from a refined lifing analysis by the engine manufacturer that shows the need to identify an initial threshold for inspecting certain TRFs. We are proposing this AD to prevent failure of the TRF from low-cycle fatigue cracks. Failure of the TRF could result in engine separation from the airplane, which could lead to loss of control of the airplane.

DATES: We must receive any comments on this proposed AD by June 22, 2007.

ADDRESSES: Use one of the following addresses to comment on this proposed AD.

- *DOT Docket Web site:* Go to *http://dms.dot.gov* and follow the instructions for sending your comments electronically.
- *Government-wide rulemaking Web site:* Go to *http://www.regulations.gov* and follow the instructions for sending your comments electronically.
- *Mail:* Docket Management Facility; U.S. Department of Transportation, 400 Seventh Street, SW., Nassif Building, Room PL–401, Washington, DC 20590–0001.
- *Fax:* (202) 493–2251.
- *Hand Delivery:* Room PL–401 on the plaza level of the Nassif Building, 400 Seventh Street, SW., Washington, DC, between 9 a.m. and 5 p.m., Monday through Friday, except Federal holidays.

You may examine the comments on this proposed AD in the AD docket on the Internet at *http://dms.dot.gov.*

FOR FURTHER INFORMATION CONTACT: Colleen M. D'Alessandro, Aerospace Engineer, Engine Certification Office, FAA, Engine and Propeller Directorate, 12 New England Executive Park, Burlington, MA 01803; telephone (781) 238–7133; fax (781) 238–7199.

SUPPLEMENTARY INFORMATION:

Comments Invited

We invite you to send us any written relevant data, views, or arguments regarding this proposal. Send your comments to an address listed under **ADDRESSES**. Include ''Docket No. FAA–2007–27229; Directorate Identifier 2007–NE–03–AD'' in the subject line of your comments. We specifically invite comments on the overall regulatory, economic, environmental, and energy aspects of the proposed AD. We will consider all comments received by the closing date and may amend the proposed AD in light of those comments.

We will post all comments we receive, without change, to *http://dms.dot.gov*, including any personal information you provide. We will also post a report summarizing each substantive verbal contact with FAA personnel concerning this proposed AD. Using the search function of the DOT Web site, anyone can find and read the comments in any of our dockets, including the name of the individual who sent the comment (or signed the comment on behalf of an association, business, labor union, etc.). You may review the DOT's complete Privacy Act Statement in the **Federal Register** published on April 11, 2000 (65 FR 19477–78) or you may visit *http://dms.dot.gov.*

Examining the AD Docket

You may examine the docket that contains the proposal, any comments received and, any final disposition in person at the DOT Docket Offices between 9 a.m. and 5 p.m., Monday through Friday, except Federal holidays. The Docket Office (telephone (800) 647–5227) is located on the plaza level of the Department of Transportation Nassif Building at the street address stated in **ADDRESSES**. Comments will be available in the AD docket shortly after the Docket Management Facility receives them.

Discussion

This AD is required because TRFs, part numbers 340–166–205–0, 340–166–206–0, 340–166–207–0, 340–166–208–0, 340–166–209–0, 340–166–210–0, now require an initial inspection threshold of 25,000 cycles-in-service (CIS) on the commercial (air carrier) models engines and 19,000 CIS on the business jet models. This proposed AD would not affect any other CFM56–7B part number TRFs. We have been monitoring CFM's revised life analysis progress since February 2005. CFM International provided to us the November 15, 2006 revision to the ESM to introduce mandatory inspections of the TRF. CFM International has been using a damage tolerant lifing approach, based on an FAA approved methodology for structural lifed components, to prepare life extensions for all CFM56 TRFs using on-condition life management. This improved life management process defines a first inspection threshold and reinspection intervals accounting for crack initiation and propagation. The previous life management process was based on crack initiation only. This condition, if not corrected, could result in failure of the TRF from low-cycle fatigue cracks. Failure of the TRF could result in engine separation from the airplane, which could lead to loss of control of the airplane.

FAA's Determination and Requirements of the Proposed AD

We have evaluated all pertinent information and identified an unsafe condition that is likely to exist or develop on other products of this same type design. We are proposing this AD, which would require revising the Airworthiness Limitations Section in the ESM and the air carrier's approved continuing airworthiness maintenance program to incorporate life reductions for certain TRFs.

Costs of Compliance

We estimate that this proposed AD would affect 1,228 engines installed on airplanes of U.S. registry. Since life extensions are possible on condition, the cost of the proposed AD will be limited to performing TRF inspections. We also estimate that it would take about 3.0 work-hours per engine to perform the proposed actions, including

the TRF inspections, and that the average labor rate is $80 per work-hour. There are no required parts. Based on these figures, we estimate the total cost of the proposed AD to U.S. operators to be $294,720.

Authority for This Rulemaking

Title 49 of the United States Code specifies the FAA's authority to issue rules on aviation safety. Subtitle I, Section 106, describes the authority of the FAA Administrator. Subtitle VII, Aviation Programs, describes in more detail the scope of the Agency's authority.

We are issuing this rulemaking under the authority described in Subtitle VII, Part A, Subpart III, Section 44701, ''General requirements.'' Under that section, Congress charges the FAA with promoting safe flight of civil aircraft in air commerce by prescribing regulations for practices, methods, and procedures the Administrator finds necessary for safety in air commerce. This regulation is within the scope of that authority because it addresses an unsafe condition that is likely to exist or develop on products identified in this rulemaking action.

Regulatory Findings

We have determined that this proposed AD would not have federalism implications under Executive Order 13132. This proposed AD would not have a substantial direct effect on the States, on the relationship between the national Government and the States, or on the distribution of power and responsibilities among the various levels of government.

For the reasons discussed above, I certify that the proposed regulation:

1. Is not a ''significant regulatory action'' under Executive Order 12866;
2. Is not a ''significant rule'' under the DOT Regulatory Policies and Procedures (44 FR 11034, February 26, 1979); and
3. Would not have a significant economic impact, positive or negative, on a substantial number of small entities under the criteria of the Regulatory Flexibility Act.

We prepared a regulatory evaluation of the estimated costs to comply with this proposed AD. See the **ADDRESSES** section for a location to examine the regulatory evaluation.

List of Subjects in 14 CFR Part 39

Air transportation, Aircraft, Aviation safety, Safety.

The Proposed Amendment

Under the authority delegated to me by the Administrator, the Federal Aviation Administration proposes to amend 14 CFR part 39 as follows:

PART 39—AIRWORTHINESS DIRECTIVES

1. The authority citation for part 39 continues to read as follows:

Authority: 49 U.S.C. 106(g), 40113, 44701.

§ 39.13 [Amended]

2. The FAA amends § 39.13 by adding the following new airworthiness directive:

CFM International: Docket No. FAA–2007–27229; Directorate Identifier 2007–NE–03–AD.

Comments Due Date

(a) The Federal Aviation Administration (FAA) must receive comments on this airworthiness directive (AD) action by June 22, 2007.

Affected ADs

(b) None.

Applicability

(c) This AD applies to CFM International CFM56–7B18, –7B20, –7B22, –7B24, –7B26, –7B27, –7B22/B1, –7B24/B1, –7B26/B1, –7B27/B1, –7B22/B2, –7B26/B2, –7B27/B3 turbofan engines with Turbine Rear Frame (TRF), part numbers 340–166–205–0, 340–166–206–0, 340–166–207–0, 340–166–208–0, 340–166–209–0, 340–166–210–0, installed. These engines are installed on, but not limited to, Boeing 737 series airplanes.

Unsafe Condition

(d) This proposed AD results from a refined lifing analysis by the engine manufacturer that shows the need to identify an initial threshold for inspecting certain TRFs. We are proposing this AD to prevent failure of the TRF from low-cycle fatigue cracks. Failure of the TRF could result in engine separation from the airplane, which could lead to loss of control of the airplane.

Compliance

(e) You are responsible for having the actions required by this AD performed within 30 days after the effective date of this AD, unless the actions have already been done.

Mandatory Inspections

(f) Within the next 30 days after the effective date of this AD, revise the applicable inspection program for the Business Jet and Air Carrier engine models by adding the Mandatory Inspection Intervals as specified in this AD, and revise the Airworthiness Limitations Section (chapter 05–21–03) of the CFM56–7B Engine Shop Manual, CFMI–TP–SM.10 by adding the following:

''TURBINE REAR FRAME WITH TANGENTIAL STRUTS—MANDATORY INSPECTIONS—LIFE LIMITS

TASK 05–21–03–200–001

1. *General*

A. This procedure gives the FAA and EASA mandatory Eddy Current inspection intervals for the turbine rear frame with tangential struts. The inspection uses:

—A threshold limit,
—Inspection intervals,

B. The threshold limit is the timing of the first required inspection. First inspection must be done before that part has reached the threshold number of flight cycles.

C. The inspection intervals specify the timing of inspections to be done after the threshold inspection has been reached. Inspections are repetitive without any limit.

2. *Mandatory Inspection Intervals for the Critical Areas of the Turbine Rear Frame with Tangential Struts (4 Mount Struts, No. 1, 2, 15, and 16).*

C. Turbine Rear Frame Part Numbers 340–166–205–0, 340–166–206–0, 340–166–207–0, 340–166–208–0, 340–166–209–0, 340–166–210–0, for all CFM56–7B SAC engine models (except –7B27A engine models). Refer to figure 805.

Figure index No.	Inspection location	Inspection threshold (cycles since new)	Inspection intervals (cycles)	Inspection reference
805	Strut/outer ring fillet radius on trailing edge (A).	25,000* for –7B SAC (except business jet) engine models.	Refer to Figure 806* for –7B SAC commercial applications.	Refer to SB 72–0579*.
	Strut/outer ring fillet radius on leading edge (B).	19,000* for –7B SAC business jet engine models.	Refer to Figure 807* for –7B SAC business jet applications.	
	Strut/outer ring fillet radius on trailing edge (C1 below outer ring).			
	Strut/outer ring fillet radius on trailing edge (C2 above outer ring).			

Note: * Applicable to all inspection locations. If inspection is not performed, part must be removed.

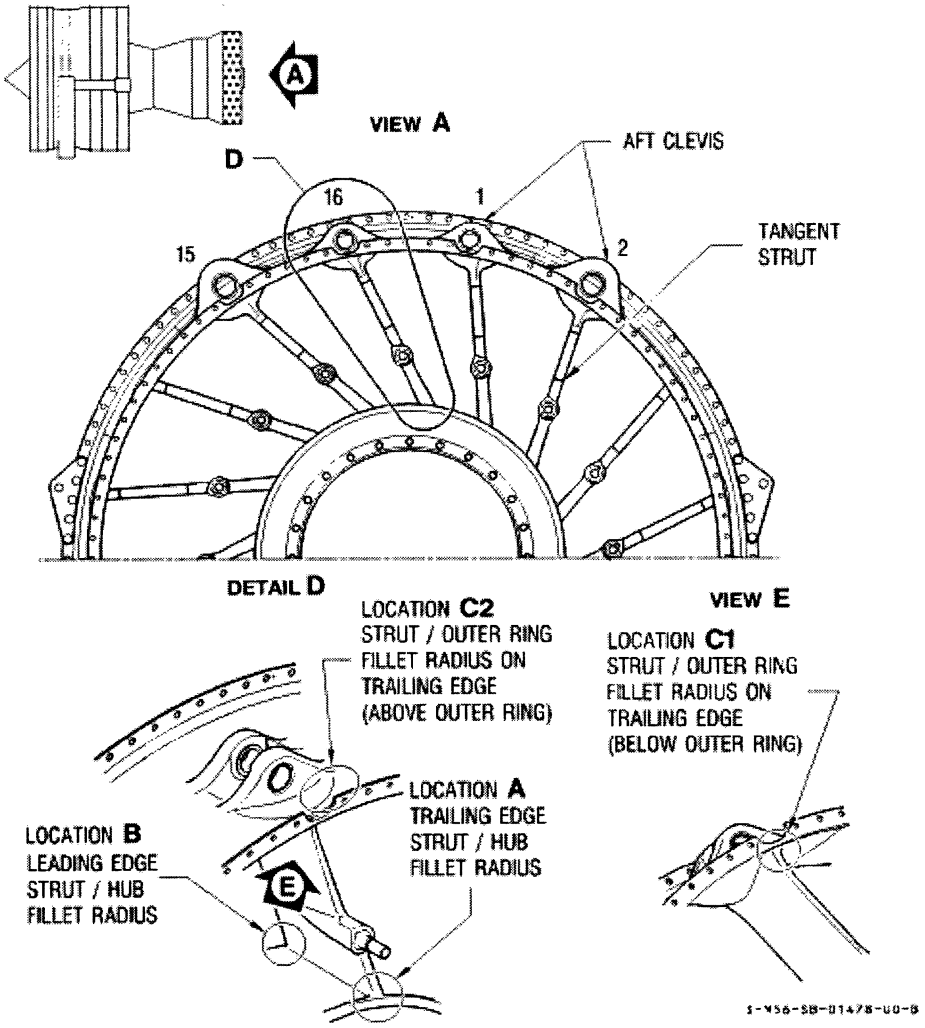

Turbine Rear Frame with Tangential struts P/N 340-166-205-0, 340-166-206-0, 340-166-207-0, 340-166-208-0, 340-166-209-0, 340-166-210-0–Areas to Be Inspected

Figure 805,

MANDATORY INSPECTION INTERVAL FOR TURBINE REAR FRAME P/N 340–166–205/206/207/208/209/210–0

IF NO CRACK IS FOUND ON ANY OF THE FOUR MOUNT STRUTS, THE TURBINE REAR FRAME IS SERVICEABLE AND MUST BE RE-INSPECTED AT 4,700 CYCLE REPETITIVE INTERVALS. IF CRACKS ARE FOUND ON THE MOUNT STRUTS, THE TRF MUST BE RE-INSPECTED ACCORDING TO THE FOLLOWING REPETITIVE INTERVALS

Total cumulated crack length at each location	Re-inspect within
L < 0.20 (5)	4,700.
0.20 (5) ≤ L < 0.28 (7)	3,300.
0.28 (7) ≤ L < 0.39 (10)	1,300.
0.39 (10) ≤ L < 0.59 (15)	700.
0.59 (15) ≤ L < 0.79 (20)	120.
L ≥ 0.79 (20)	IMMEDIATELY REMOVE THE TURBINE FRAME.

DURING EACH INSPECTION, ALL THE LOCATIONS MUST BE INSPECTED. IF CRACKS ARE FOUND AT DIFFERENT LOCATIONS, THE REPETITIVE INSPECTION INTERVAL IS THE MINIMUM INTERVAL CORRESPONDING TO THE MAX. CUMULATED CRACK LENGTHS.

NOTE: DIMENSIONS ARE IN INCHES WITH MILLIMETERS IN PARENTHESES.

Inspection Intervals for –7B SAC (Except Business Jet) Engine Models

Figure 806

MANDATORY INSPECTION INTERVAL FOR TURBINE REAR FRAME P/N 340–166–205/206/207/208/209/210–0

IF NO CRACK IS FOUND ON ANY OF THE FOUR MOUNT STRUTS, THE TURBINE REAR FRAME IS SERVICEABLE AND MUST BE RE-INSPECTED AT 3,300 CYCLE REPETITIVE INTERVALS. IF CRACKS ARE FOUND ON THE MOUNT STRUTS, THE TRF MUST BE RE-INSPECTED ACCORDING TO THE FOLLOWING REPETITIVE INTERVALS

Total cumulated crack length at each location	Re-inspect within
L < 0.20 (5)	3,300.
0.20 (5) ≤ L < 0.28 (7)	2,400.
0.28 (7) ≤ L < 0.39 (10)	900.
0.39 (10) ≤ L < 0.59 (15)	500.
0.59 (15) ≤ L < 0.79 (20)	80.
L ≥ 0.79 (20)	IMMEDIATELY REMOVE THE TURBINE FRAME.

DURING EACH INSPECTION, ALL THE LOCATIONS MUST BE INSPECTED. IF CRACKS ARE FOUND AT DIFFERENT LOCATIONS, THE REPETITIVE INSPECTION INTERVAL IS THE MINIMUM INTERVAL CORRESPONDING TO THE MAX. CUMULATED CRACK LENGTHS.

NOTE: DIMENSIONS ARE IN INCHES WITH MILLIMETERS IN PARENTHESES.

Inspection Intervals for –7B SAC Business Jet Engine Models

Figure 807

(g) After the effective date of this AD, we will not approve any alternative inspection intervals for these parts except as provided for in paragraph (j) of this AD.

TRFs With Unknown Cycles

(h) If you can not establish the number of cycles accumulated since new, remove or inspect the TRF within 300 cycles-in-service after the effective date of this AD. The CFM56–7B ESM or CAMP contains information for inspecting the TRF.

(i) You may install a TRF removed in paragraph (h) of this AD after the TRF passes an initial inspection for cracks. The CFM56–7B ESM or continuous airworthiness program contains information on inspecting the TRF.

Alternative Methods of Compliance

(j) The Manager, Engine Certification Office, has the authority to approve alternative methods of compliance for this AD if requested using the procedures found in 14 CFR 39.19.

Maintaining Records of the Mandatory Inspections

(k) You have met the requirements of this AD by making the changes to the Engine Shop Manual as specified in paragraph (f) of this AD, and, for air carriers operating under part 121 of the Federal Aviation Regulations (14 CFR part 121), by modifying your continuous airworthiness maintenance plan to reflect those changes. You must maintain records of the mandatory inspections that result from those changes to the ALS according to the regulations governing your operation. You do not need to record each inspection as compliance to this AD. For air carriers operating under part 121, you may use the system established to comply with section 121.369.

Related Information

(l) CFM International Service Bulletin CFM56–7B S/B 72–0579, Revision 1, Dated October 27, 2006, contains information about Eddy Current inspection.

Issued in Burlington, Massachusetts, on April 13, 2007.

Peter A. White,

Acting Manager, Engine and Propeller Directorate, Aircraft Certification Service.

[FR Doc. E7–7504 Filed 4–20–07; 8:45 am]

BILLING CODE 4910–13–P

DEPARTMENT OF TRANSPORTATION

Federal Aviation Administration

14 CFR Part 71

[Docket No. FAA–2007–27332; Airspace Docket No. 07–AWP–2]

Proposed Establishment of Low Altitude Area Navigation Routes (T-Routes); Los Angeles, CA

AGENCY: Federal Aviation Administration (FAA), DOT.

ACTION: Notice of proposed rulemaking (NPRM).

SUMMARY: This action proposes to establish three low altitude Area Navigation (RNAV) routes, designated T–245, T–247, and T–249 in the Los Angeles International Airport, CA, terminal area. T-routes are low altitude Air Traffic Service (ATS) routes, based on RNAV, for use by aircraft having instrument flight rules (IFR) approved Global Positioning System (GPS)/Global Navigation Satellite System (GNSS) equipment. The FAA is proposing this action to enhance safety and improve the efficient use of the navigable airspace in the Los Angeles International Airport, CA, terminal area.

DATES: Comments must be received on or before June 7, 2007.

ADDRESSES: Send comments on this proposal to the Docket Management System, U.S. Department of Transportation, Room Plaza 401, 400 Seventh Street, SW., Washington, DC 20590–0001. You must identify FAA Docket No. FAA–2007–27332 and Airspace Docket No. 07–AWP–2, at the beginning of your comments. You may also submit comments through the Internet at http://dms.dot.gov.

FOR FURTHER INFORMATION CONTACT: Ken McElroy, Airspace and Rules Group, Office of System Operations Airspace and AIM, Federal Aviation Administration, 800 Independence Avenue, SW., Washington, DC 20591; telephone: (202) 267–8783.

SUPPLEMENTARY INFORMATION:

Comments Invited

Interested parties are invited to participate in this proposed rulemaking by submitting such written data, views, or arguments, as they may desire. Comments that provide the factual basis supporting the views and suggestions presented are particularly helpful in developing reasoned regulatory decisions on the proposal. Comments are specifically invited on the overall regulatory, aeronautical, economic, environmental, and energy-related aspects of the proposal.

Communications should identify both docket numbers (FAA Docket No. FAA–2007–27332 and Airspace Docket No. 07–AWP–2) and be submitted in triplicate to the Docket Management System (see **ADDRESSES** section for address and phone number). You may also submit comments through the Internet at *http://dms.dot.gov.*

Commenters wishing the FAA to acknowledge receipt of their comments on this action must submit with those comments a self-addressed, stamped

postcard on which the following statement is made: ''Comments to FAA Docket No. FAA–2007–27332 and Airspace Docket No. 07–AWP–2.'' The postcard will be date/time stamped and returned to the commenter.

All communications received on or before the specified closing date for comments will be considered before taking action on the proposed rule. The proposal contained in this action may be changed in light of comments received. All comments submitted will be available for examination in the public docket both before and after the closing date for comments. A report summarizing each substantive public contact with FAA personnel concerned with this rulemaking will be filed in the docket.

Availability of NPRM's

An electronic copy of this document may be downloaded through the Internet at *http://dms.dot.gov*. Recently published rulemaking documents can also be accessed through the FAA's web page at *http://www.faa.gov*, or the **Federal Register**'s web page at *http://www.gpoaccess.gov/fr/index.html.*

You may review the public docket containing the proposal, any comments received, and any final disposition in person in the Dockets Office (see **ADDRESSES** section for address and phone number) between 9 a.m. and 5 p.m., Monday through Friday, except Federal holidays. An informal docket may also be examined during normal business hours at the office of the Western Service Center, Air Traffic Organization, Federal Aviation Administration, 1601 Lind Avenue, 15000 SW., Renton, WA 98055.

Persons interested in being placed on a mailing list for future NPRM's should contact the FAA's Office of Rulemaking, (202) 267–9677, for a copy of Advisory Circular No. 11–2A, Notice of Proposed Rulemaking Distribution System, which describes the application procedure.

Low Altitude RNAV Route Identification and Charting

Low altitude RNAV routes are identified by the letter ''T'' prefix followed by a three digit number. The ''T'' prefix is one of several International Civil Aviation Organization designators used to identify domestic RNAV routes. The FAA has been allocated the letter ''T'' prefix and the number block 200 to 500 for use in naming these routes. The FAA uses the ''T'' prefix for RNAV routes in the low altitude en route structure of the National Airspace System.

T-routes are depicted in blue on the appropriate IFR en route low altitude chart(s).

Each route depiction includes a GNSS minimum en route altitude to ensure obstacle clearance and communications reception.

The Proposal

The FAA is proposing an amendment to Title 14 Code of Federal Regulations (14 CFR) part 71 to establish three low altitude RNAV routes in the Los Angeles International Airport, CA, terminal area. The routes would be designated T–245, T–247, and T–249, and would be depicted on the appropriate IFR En Route Low Altitude charts. T-routes are low altitude RNAV ATS routes, similar to Very High Frequency Omnidirectional Range Federal airways, but based on GNSS navigation. RNAV-equipped aircraft capable of filing flight plan equipment suffix ''G'' may file for these routes.

The T-routes described in this notice are being proposed to enhance safety, and to facilitate the more flexible and efficient use of the navigable airspace for en route IFR operations transitioning through and around the Los Angeles Class B airspace area.

Low altitude RNAV routes are published in paragraph 6011 of FAA Order 7400.9P, dated September 1, 2006 and effective September 15, 2006, which is incorporated by reference in 14 CFR 71.1. The low altitude RNAV routes listed in this document would be published subsequently in the Order.

The FAA has determined that this proposed regulation only involves an established body of technical regulations for which frequent and routine amendments are necessary to keep them operationally current. Therefore, this proposed regulation: (1) Is not a ''significant regulatory action'' under Executive Order 12866; (2) is not a ''significant rule'' under Department of Transportation (DOT) Regulatory Policies and Procedures (44 FR 11034; February 26, 1979); and (3) does not warrant preparation of a regulatory evaluation as the anticipated impact is so minimal. Since this is a routine matter that will only affect air traffic procedures and air navigation, it is certified that this proposed rule, when promulgated, will not have a significant economic impact on a substantial number of small entities under the criteria of the Regulatory Flexibility Act.

Environmental Review

The FAA has determined that this action qualifies for categorical exclusion under the National Environmental Policy Act in accordance with FAA Order 1050.1E, ''Environmental Impacts: Policies and Procedures,'' paragraph 311a, 311b, and 311k. This airspace action is not expected to cause any potentially significant environmental impacts, and no extraordinary circumstances exist that warrant preparation of an environmental assessment.

List of Subjects in 14 CFR Part 71

Airspace, Incorporation by reference, Navigation (air).

The Proposed Amendment

In consideration of the foregoing, the Federal Aviation Administration proposes to amend 14 CFR part 71 as follows:

PART 71—DESIGNATION OF CLASS A, B, C, D, AND E AIRSPACE AREAS; AIR TRAFFIC SERVICE ROUTES; AND REPORTING POINTS

1. The authority citation for part 71 continues to read as follows:

Authority: 49 U.S.C. 106(g), 40103, 40113, 40120; E.O. 10854, 24 FR 9565, 3 CFR, 1959–1963 Comp., p. 389.

§ 71.1 [Amended]

2. The incorporation by reference in 14 CFR 71.1 of FAA Order 7400.9P, Airspace Designations and Reporting Points, dated September 1, 2006, and effective September 15, 2006, is amended as follows:

Paragraph 6011—Area Navigation Routes

* * * * *

T–245 Seal Beach, CA (SLI) to SILEX [New]

Seal Beach (SLI)	VORTAC	(Lat. 33°47′00″ N., long. 118°03′17″ W.)
POPPR	Fix	(Lat. 33°50′34″ N., long. 118°17′18″ W.)
Santa Monica (SMO)	VOR/DME	(Lat. 34°00′37″ N., long. 118°27′24″ W.)
SILEX	Fix	(Lat. 34°12′04″ N., long. 118°36′39″ W.)

* * * * * * *

T–247 Seal Beach, CA (SLI) to CANOG [New]

Seal Beach (SLI)	VORTAC	(Lat. 33°47′00″ N., long. 118°03′17″ W.)

POPPR	Fix	(Lat. 33°50′34″ N., long. 118°17′18″ W.)
Santa Monica (SMO)	VOR/DME	(Lat. 34°00′37″ N., long. 118°27′24″ W.)
CANOG	Fix	(Lat. 34°13′24″ N., long. 118°35′39″ W.)

* * * * * * *

T–249 Van Nuys, CA (VNY) to Seal Beach, CA [New]

Van Nuys (VNY)	VOR/DME	(Lat. 34°13′24″ N., long. 118°29′30″ W.)
Santa Monica (SMO)	VOR/DME	(Lat. 34°00′37″ N., long. 118°27′24″ W.)
POPPR	Fix	(Lat. 33°50′34″ N., long. 118°17′18″ W.)
Seal Beach (SLI)	VORTAC	(Lat. 33°47′00″ N., long. 118°03′17″ W.)

* * * * *

Issued in Washington, DC, on April 13, 2007.

Edith V. Parish,

Manager, Airspace and Rules Group.

[FR Doc. E7–7633 Filed 4–20–07; 8:45 am]

BILLING CODE 4910–13–P

DEPARTMENT OF THE TREASURY

Internal Revenue Service

26 CFR Part 20

[REG–143316–03]

RIN 1545–BC56

Guidance Under Section 2053 Regarding Post-Death Events

AGENCY: Internal Revenue Service (IRS), Treasury.

ACTION: Notice of proposed rulemaking and notice of public hearing.

SUMMARY: This document contains proposed amendments to the regulations relating to the amount deductible from a decedent's gross estate for claims against the estate under section 2053(a)(3) of the Internal Revenue Code (Code). In addition, the proposed regulations update the provisions relating to the deduction for certain state death taxes to reflect the statutory amendments made in 2001 under sections 2053(d) and 2058. The proposed regulations will affect estates of decedents against whom there are claims outstanding at the time of the decedent's death. This document also provides notice of a public hearing on these proposed regulations.

DATES: Written or electronic comments must be received by July 23, 2007. Outlines of topics to be discussed at the public hearing scheduled for August 6, 2007, at 10 a.m., must be received by July 30, 2007.

ADDRESSES: Send submissions to: CC:PA:LPD:PR (REG–143316–03), Room 5203, Internal Revenue Service, PO Box 7604, Ben Franklin Station, Washington, DC 20044. Submissions may be hand delivered Monday through Friday between the hours of 8 a.m. and 4 p.m. to CC:PA:LPD:PR (REG–143316–03), Courier's Desk, Internal Revenue Service, 1111 Constitution Avenue, NW., Washington, DC; or sent electronically via the Federal eRulemaking Portal at *http://www.regulations.gov* (IRS REG–143316–03). The public hearing will be held in the IRS Auditorium, Internal Revenue Building, 1111 Constitution Avenue, NW., Washington, DC.

FOR FURTHER INFORMATION CONTACT: Concerning the proposed regulations, DeAnn K. Malone, at (202) 622–3112; concerning submissions of comments, the hearing, and/or to be placed on the building access list to attend the hearing, Richard Hurst, at (202) 622–2949 (TDD telephone) (not toll-free numbers) or e-mail at *Richard.A.Hurst@irscounsel.treas.gov.*

SUPPLEMENTARY INFORMATION:

Background

Section 2001 of the Code imposes a tax on the transfer of the taxable estate, determined as provided in section 2051, of every decedent, citizen, or resident of the United States. Section 2031(a) generally provides that the value of the decedent's gross estate shall include the value at the time of decedent's death of all property, real or personal, tangible or intangible, wherever situated. Section 2051 provides that the value of the taxable estate is determined by deducting from the value of the gross estate the deductions provided for in sections 2051 through 2058. Pursuant to section 2053(a), ''the value of the taxable estate shall be determined by deducting from the value of the gross estate such amounts—(1) for funeral expenses, (2) for administration expenses, (3) for claims against the estate, and (4) for unpaid mortgages on, or any indebtedness in respect of, property where the value of the decedent's interest therein, undiminished by such mortgage or indebtedness, is included in the value of the gross estate, as are allowable by the laws of the jurisdiction, whether within or without the United States, under which the estate is being administered.''

The deductions allowable under sections 2051 through 2058 operate to eliminate from estate taxation those portions of the gross estate that are necessarily expended in paying certain claims and expenses of the estate. The rationale for those deductions is that those expended portions of the gross estate are not transferred to the decedent's legatees, beneficiaries, or heirs and, therefore, are not subject to the transfer tax.

The amount an estate may deduct for claims against the estate has been a highly litigious issue. Unlike section 2031, section 2053(a) does not contain a specific directive to value a deductible claim at its date of death value. Section 2053, in fact, specifically contemplates expenses such as funeral and administration expenses, which are only determinable after the decedent's date of death. Although numerous courts have addressed section 2053(a)(3), there is little or no consistency among the conclusions of those courts with regard to the extent (if any) to which post-death events are to be considered in valuing such claims. One line of cases follows the decision in *Ithaca Trust* v. *Commissioner*, 279 U.S. 151 (1929), holding that the estate tax charitable deduction for a charitable remainder interest was to be determined as of date of death. In Federal judicial circuits where the *Ithaca Trust* date-of-death valuation approach is applied to a claim against a decedent's estate under section 2053(a)(3), courts generally hold that post-death events may not be considered when determining the amount deductible for that claim. At the opposite end of the spectrum, there is a line of cases that follows the Eighth Circuit's opinion in *Jacobs* v. *Commissioner*, 34 F.2d 233 (8th Cir. 1929), *cert. denied*, 280 U.S. 603 (1929), in which the court considered but rejected the date-of-death valuation approach in determining the deductible amount of a claim against the estate. The court in *Jacobs* distinguished *Ithaca Trust*, stating that, unlike charitable deductions, ''* * * the claims which Congress intended to be deducted were actual claims, not theoretical ones.'' The

court therefore held that only claims presented and determined as valid against the estate and actually paid could be deducted as claims against the estate. *Jacobs*, 34 F.2d at 235. The courts that follow *Jacobs* generally restrict the amount deductible under section 2053(a)(3) to amounts actually paid by the estate in satisfaction of the claim.

Even in the circuits where the date-of-death valuation approach has been applied in determining the amount that may be deducted for a claim against the decedent's estate, courts have recognized exceptions that necessitate taking into account events that occur after the decedent's death. For example, courts have deviated from the date-of-death valuation approach in favor of the actual payment approach when a claim is contested, contingent, unenforceable, becomes unenforceable after the decedent's death, or is not in fact presented for payment. The application and extent of these exceptions are inconsistent from circuit to circuit, however, and cannot be reconciled to form a conclusive rule applicable to all estates.

The result of this lack of consistency in the case law is that similarly situated estates are being treated differently for Federal estate tax purposes, depending only upon the jurisdiction in which the executor resides. The Treasury Department and the IRS believe that similarly situated estates should be treated consistently by having section 2053(a)(3) construed and applied in the same way in all jurisdictions.

One possible approach would be to value claims against a decedent's estate on the basis of the facts existing on the date of the decedent's death. The Treasury Department and the IRS believe, however, that this date-of-death valuation approach, when applied, has required an inefficient use of resources for taxpayers, the IRS, and the courts. Determining a date-of-death value requires the taxpayer and the IRS to retry the substantive issues underlying the claims against the estate in a tax controversy setting. In most cases, the tax controversy is addressed after the issue either has been settled by or has been argued by parties with adverse interests in a court of competent jurisdiction that is more familiar with the nuances of the underlying applicable law. Furthermore, this approach has proven to be expensive, both in terms of appraisal and litigation costs. In addition, this approach generally results in a deduction that is different from the amount actually paid on disputed claims. Finally, the date-of-death valuation approach often forces the taxpayer involved in actively defending against a claim to take contradictory positions on the estate tax return and in the substantive court pleadings, and may actually increase the taxpayer's potential liability.

After carefully considering the numerous judicial decisions and the analysis and conclusion in each, the legislative history of section 2053 and its predecessors, and the various possible alternatives, and in order to further the goal of the effective and fair administration of the tax laws, the proposed regulations adopt rules based on the premise that an estate may deduct under section 2053(a)(3) only amounts actually paid in settlement of claims against the estate. If the resolution of a contested or contingent claim cannot be reached prior to the expiration of the period of limitations for claims for refund, the estate may file a protective claim for refund to preserve its right to claim a deduction under section 2053(a).

Explanation of Provisions

The proposed regulations will amend the regulations under section 2053 to clarify that events occurring after a decedent's death are to be considered when determining the amount deductible under all provisions of section 2053 and that deductions under section 2053 are limited to amounts actually paid by the estate in satisfaction of deductible expenses and claims. Final court decisions as to the amount and enforceability of the claim or expense are accepted in determining the amount deductible if the court passes upon the facts upon which deductibility depends. Settlements are accepted if they are reached in bona fide negotiations between adverse parties with valid claims recognizable under applicable law, and if they are not inconsistent with the applicable law. A protective claim for refund may be filed before the expiration of the period of limitations for claims for refund in order to preserve the estate's right to claim a refund if the amount of a liability will not be ascertainable by the time of the expiration of the period of limitations for claims of refund. A deduction is not allowed to the extent the expense or claim is compensated for by insurance or is otherwise reimbursed.

The proposed regulations further provide that no deduction may be taken on an estate tax return for a claim that is potential, unmatured, or contested at the time the return is filed. A protective claim for refund may be filed before the expiration of the period of limitations for claims for refund in order to preserve the estate's right to claim a refund by reason of the deduction of a claim against the estate to the extent that claim is ultimately paid by the estate.

Additional provisions in the proposed regulations provide guidance for other particular circumstances. When a claim against an estate lists multiple defendants, the estate may only deduct the decedent's portion of the liability. Claims by family members or beneficiaries of a decedent's estate will be strictly scrutinized to ensure that they are legitimate claims. If a claim becomes unenforceable after the decedent's death, the estate may not take a section 2053(a)(3) deduction with respect to the claim. If a claim represents a decedent's obligation to make recurring payments that will likely continue for a period extending beyond the final determination of the estate tax liability, a deduction is allowed only as each payment is made, provided the period of limitations for claims for refund has not expired or the estate has properly preserved the claim for refund. Alternatively, a deduction is allowed for the cost of a commercial annuity purchased by the estate from an unrelated dealer in commercial annuities in satisfaction of that obligation.

Finally, the proposed regulations reflect changes made to section 2053(d) and the enactment of section 2058 in 2001 and clarify that the rules in section 20.2053–9 apply only to the estates of decedents dying on or before December 31, 2004.

Proposed Effective Date

The regulations, as proposed, apply to the estate of any decedent dying on or after the date final regulations are published in the **Federal Register**.

Special Analyses

It has been determined that this notice of proposed rulemaking is not a significant regulatory action as defined in Executive Order 12866. Therefore, a regulatory assessment is not required. It has also been determined that section 553(b) of the Administrative Procedure Act (5 U.S.C. chapter 5) does not apply to these regulations, and because these regulations do not impose a collection of information on small entities, the Regulatory Flexibility Act (5 U.S.C. chapter 6) does not apply. Therefore, a Regulatory Flexibility Analysis is not required. Pursuant to section 7805(f) of the Code, this notice of proposed rulemaking will be submitted to the Chief Counsel for Advocacy of the Small Business Administration for comment on its impact on small business.

Comments and Public Hearing

Before these proposed regulations are adopted as final regulations, consideration will be given to any written (a signed original and eight (8) copies) or electronic comments that are submitted timely to the IRS. The IRS and the Treasury Department also request comments on the clarity of the proposed rules and how they can be made easier to understand. All comments will be available for public inspection and copying.

A public hearing has been scheduled for August 6, 2007, at 10 a.m. in the IRS Auditorium, Internal Revenue Service, 1111 Constitution Avenue, NW., Washington, DC. Due to building security procedures, visitors must enter at the Constitution Avenue entrance. In addition, all visitors must present photo identification to enter the building. Because of access restrictions, visitors will not be admitted beyond the immediate entrance area more than 30 minutes before the hearing starts. For information about having your name placed on the building access list to attend the hearing, see the **FOR FURTHER INFORMATION CONTACT** section of this preamble.

The rules of 26 CFR 601.601(a)(3) apply to the hearing. Persons who wish to present oral comments at the hearing must submit electronic or written comments by July 16, 2007, and an outline of the topics to be discussed and the time to be devoted to each topic (signed original and eight (8) copies) by July 30, 2007. A period of 10 minutes will be allotted to each person for making comments. An agenda showing the scheduling of the speakers will be prepared after the deadline for receiving outlines has passed. Copies of the agenda will be available free of charge at the hearing.

Drafting Information

The principal author of these proposed regulations is DeAnn K. Malone, Office of the Chief Counsel, IRS.

List of Subjects in 26 CFR Part 20

Estate taxes, Reporting and recordkeeping requirements.

Proposed Amendments to the Regulations

Accordingly, 26 CFR part 20 is proposed to be amended as follows:

PART 20—ESTATE TAX; ESTATES OF DECEDENTS DYING AFTER AUGUST 16, 1954

Paragraph 1. The authority citation for part 20 continues to read in part as follows:

Authority: 26 U.S.C. 7805. * * *

Par. 2. Section 20.2051–1 is revised to read as follows:

§ 20.2051–1 Definition of taxable estate.

(a) The taxable estate of a decedent who was a citizen or resident (see § 20.0–1(b)(1)(i)) of the United States at death is determined by subtracting the total amount of the deductions authorized by sections 2052 through 2058 from the total amount which must be included in the gross estate under sections 2031 through 2044. These deductions are in general as follows:

(1) An exemption of $60,000 (section 2052) (applicable only to the estates of decedents dying on or before December 31, 1976).

(2) Funeral and administration expenses and claims against the estate (including certain taxes and charitable pledges) (section 2053).

(3) Losses from casualty or theft during the administration of the estate (section 2054).

(4) Charitable transfers (section 2055).

(5) The marital deduction (section 2056).

(6) Qualified domestic trusts (section 2056A).

(7) Family-owned business interests (section 2057) (applicable only to the estates of decedents dying on or before December 31, 2003).

(8) State death taxes (section 2058) (applicable only to the estates of decedents dying after December 31, 2004).

(b) See section 2106 and these regulations for the computation of the taxable estate of a decedent who was not a citizen or resident of the United States. See also § 1.642(g)–1 of this chapter concerning the disallowance for income tax purposes of certain deductions allowed for estate tax purposes.

(c) *Effective date.* The rules of this section apply to the estates of decedents dying on or after the date of publication of the Treasury decision adopting these rules as final regulations in the **Federal Register**.

Par. 3. Section 20.2053–1 is amended by:

1. Revising the introductory text of paragraph (a).

2. Adding two new sentences at the end of paragraph (b)(1).

3. Revising paragraph (b)(2).

4. Redesignating paragraph (b)(3) as (b)(4) and revising the newly-designated paragraph (b)(4).

5. Adding new paragraphs (b)(3), (b)(5), (b)(6), and (e).

The revisions and additions read as follows:

§ 20.2053–1 Deductions for expenses, indebtedness, and taxes; in general.

(a) *General rule.* In determining the taxable estate of a decedent who was a citizen or resident of the United States at death, there are allowed as deductions under section 2053(a) and (b) amounts falling within the following two categories (subject to the limitations contained in this section and in §§ 20.2053–2 through 20.2053–10):

* * * * *

(b) * * * (1) * * * In order to properly take into account events occurring after the date of a decedent's death when determining the amount deductible against a decedent's estate, the deduction for any item described in paragraph (a) of this section is limited to the total amount actually paid (subject to any time requirement under paragraph (a) of this section) in settlement or satisfaction of that item. (See however, § 20.2053–1(b)(4) for a special rule for deducting certain estimated amounts.)

(2) *Effect of court decree*—(i) *In general.* If the court with appropriate jurisdiction over the administration of the estate reviews and approves expenditures for funeral expenses, administration expenses, claims against the estate, or unpaid mortgages as allowable estate expenditures under local law, the executor may rely on the final judicial decision in that matter to determine the amount deductible for estate tax purposes if the following conditions are satisfied: The expenditures are otherwise deductible under section 2053 and the corresponding regulations; the expenditures have been paid by the estate or meet the requirements for estimated expenses; the court reviewed the facts relating to the expenditures; and the court's decision is consistent with local law. See § 20.2053–2 for additional rules regarding the deductibility of funeral expenses. See § 20.2053–3 for additional rules regarding the deductibility of administration expenses. See § 20.2053–4 for additional rules regarding the deductibility of claims against the estate. See § 20.2053–7 for additional rules regarding the deductibility of unpaid mortgages. If the decision reached by the court is inconsistent with local law, the estate may not rely on the court's decree to establish the

amount deductible for estate tax purposes. For example, a local court decree approving an allowance made to an executor in excess of the amount or limit prescribed by statute may not be relied upon to establish the amount deductible under section 2053. An estate will not be denied an otherwise allowable deduction under section 2053 solely because a local court decree has not been entered with respect to that amount if the amount would be allowable under local law and if no court decree is required under applicable law for payment.

(ii) *Consent decree.* An executor may rely on a local court decree rendered by consent to establish the amount deductible under section 2053 for amounts paid (or meeting the requirements for estimated expenses) if the consent was a bona fide recognition of the validity of the claim and was accepted by the court as satisfactory evidence upon the merits. Consent given by all parties having interests adverse to that of the claimant will be presumed to be recognition of the claim's validity. See § 20.2053–4(b)(4) for special rules to determine the amount deductible for claims by decedent's family members, related entities, or beneficiaries of the decedent's estate or revocable trust.

(3) *Settlements.* An executor may rely on a settlement to establish the amount deductible under section 2053 for amounts paid (or meeting the requirements for estimated expenses) (subject to any applicable time limitation under paragraph (a) of this section) if the following conditions are satisfied: The settlement resolves a bona fide issue in an active and genuine contest; the settlement is the product of arm's length negotiations by parties having adverse interests with respect to the claim; and the settlement is within the range of reasonable outcomes under applicable state law governing the issues resolved by the settlement. A settlement that results in a compromise between the positions of such adverse parties and reflects the parties' assessments of the relative strengths of their respective positions is a settlement that is within the range of reasonable outcomes. However, a deduction for amounts paid in settlement of a claim against the decedent's estate will not be allowed if the terms of the settlement are inconsistent with applicable local law. No deduction will be allowed for amounts paid in settlement of an unenforceable claim. See § 20.2053–4(b)(4) for special rules to determine the amount deductible for claims by decedent's family members, related entities, or beneficiaries of the decedent's estate or revocable trust. For settlements structured using recurring payments, see § 20.2053–4(b)(7).

(4) *Estimated amounts.* A deduction will be allowed for a claim that satisfies all applicable requirements even though its exact amount is not then known, provided that the amount is ascertainable with reasonable certainty, and will be paid. Under this exception to the rule set forth in paragraph (b)(1) of this section, no deduction may be taken upon the basis of a vague or uncertain estimate. If a deduction is allowed in advance of payment and the payment is thereafter waived or otherwise left unpaid, it shall be the duty of the executor to notify the Commissioner and to pay the resulting tax, together with interest. To the extent that the amount of a liability otherwise deductible under section 2053 is not ascertainable with reasonable certainty at the time of examination of the return by the Commissioner, or to the extent that it is not then clear that the amount will be paid, that amount will not be allowed as a deduction by the Commissioner. If the deduction is disallowed in whole or in part on examination of the return and the amount of the liability is subsequently ascertained and paid, relief may be sought by a timely claim for refund as provided by section 6511. A protective claim for refund may be filed before the expiration of the period of limitations for claims for refund in order to preserve the estate's right to claim a refund if the amount of a liability was or will not be paid before the expiration of the period of limitations for claims for refund. Although the protective claim need not state a particular dollar amount or demand an immediate refund, the protective claim must identify the outstanding liability or claim that would have been deductible under section 2053(a) had it already been paid. The protective claim must also describe the reasons and contingencies delaying the determination of the liability or the actual payment of the claim. Action on protective claims will proceed after the executor has notified the Commissioner that the contingency has been resolved.

(5) *Reimbursements.* A deduction is not allowed to the extent that the expense or claim is or could be compensated for by insurance or otherwise reimbursed.

(6) *Examples.* The following examples illustrate the application of this section. Assume that the amounts are payable out of property subject to claims and are allowable by the law of the jurisdiction governing the administration of the estate, whether the applicable jurisdiction is within or without the United States.

Example 1. Estimated amounts, deduction ascertainable. Decedent's (D's) estate was probated in state. State law provides that the personal representative shall receive compensation equal to 2.5 percent of the value of the probate estate. The executor (E) may claim a deduction for estimated fees equal to 2.5 percent of D's probate estate on the estate tax return filed for D's estate as an estimated amount, provided the amount will be paid to E after the estate tax return is filed. To the extent that, at the time of the examination of the return, the amount has not been paid and E cannot satisfy the conditions listed in paragraph (b)(4) of this section and § 20.2053–3(b)(1), the deduction will be disallowed, but the executor may file a timely protective claim for refund to protect the estate's right to a refund once the amount has been paid or satisfies the applicable conditions. If the deduction is allowed in advance of payment and the payment is thereafter waived or otherwise left unpaid, it shall be the duty of the executor to notify the Commissioner and to pay the resulting tax, together with interest.

Example 2. Estimated amounts, deduction not ascertainable. Prior to death, Decedent (D) is sued by Claimant (C) for $100× in a tort proceeding and responds asserting affirmative defenses available to D under applicable local law. C and D are unrelated. D subsequently dies and D's Form 706 is due before a final judgment is entered in the case. The executor (E) of D's estate may not take a deduction for $100× on D's estate tax return as an estimated amount because the deductible amount cannot be ascertained with reasonable certainty in accordance with § 20.2053–4(b)(2). If the amount of the actual liability will not be paid or cannot be ascertained with reasonable certainty before the expiration of the period of limitations for claims for refund, E may file a protective claim before that date in order to preserve the estate's right subsequently to claim a refund.

* * * * *

(e) *Effective date.* The rules of this section apply to the estates of decedents dying on or after the date of publication of the Treasury decision adopting these rules as final regulations in the **Federal Register**.

Par. 4. Section 20.2053–3 is amended by:

1. Redesignating paragraphs (b)(2) and (b)(3) as paragraphs (b)(4) and (b)(5), respectively.
2. Designating the undesignated text following paragraph (b)(1) as new paragraph (b)(3).
3. Revising paragraphs (b)(1) and (c)(1).
4. Adding new paragraphs (b)(2), (d)(3) and (e).

The revisions and additions read as follows:

§ 20.2053–3 Deductions for expenses of administering estate.

* * * * *

(b) *Executor's commissions.* (1) The executor, in filing the estate tax return, may deduct executor's commissions in such an amount as has actually been paid, or in an amount which at the time of filing the estate tax return may reasonably be expected to be paid, but no deduction may be taken if no commissions are to be collected. If the amount of the commissions has not been fixed by decree of the proper court, the deduction will be allowed on the examination of the return, to the extent that all three of the following conditions are satisfied:

(i) The Commissioner is reasonably satisfied that the commissions claimed will be paid.

(ii) The amount claimed as a deduction is within the amount allowable by the laws of the jurisdiction in which the estate is being administered.

(iii) It is in accordance with the usually accepted practice in the jurisdiction to allow such an amount in estates of similar size and character.

(2) If the conditions described in paragraph (b)(1) of this section are not met, a protective claim for refund may be filed before the expiration of the period of limitations for claims for refund in order to preserve the estate's right to claim a refund for future amounts paid as described in § 20.2053–1(b)(4).

(3) If the deduction is disallowed in whole or in part on the examination of the return and a protective claim was timely filed, the disallowance will be subject to modification once the requirements for deductibility are met. If the deduction is allowed in advance of payment and payment is thereafter waived or otherwise left unpaid, it shall be the duty of the executor to notify the Commissioner and to pay the resulting tax, together with interest.

* * * * *

(c) *Attorney's fees.* (1) The executor, in filing the estate tax return, may deduct such an amount of attorney's fees as has actually been paid, or an amount which at the time of filing may reasonably be expected to be paid. If on the examination of the return, the fees claimed have not been awarded by the proper court and paid, the deduction will, nevertheless, be allowed, if the Commissioner is reasonably satisfied that the amount claimed will be paid and that it does not exceed a reasonable remuneration for the services rendered, taking into account the size and character of the estate and the local law and practice. If the amount does not satisfy these requirements, a protective claim for refund may be filed before the expiration of the period of limitations for claims for refund in order to preserve the estate's right to claim a refund for future amounts paid as described in § 20.2053–1(b)(4). If the deduction is disallowed in whole or in part on the examination of the return and a protective claim was timely filed, the disallowance will be subject to modification once the requirements for deductibility are met.

* * * * *

(d) * * *

(3) Expenses incurred in defending the estate against claims described in section 2053(a)(3) are deductible as provided in § 20.2053–1 if the expenses are incurred incident to the assertion of defenses to the claim available under the applicable law, even if the estate is not ultimately victorious. For purposes of this section, ''expenses incurred in defending the estate against claims'' include costs relating to the arbitration and mediation of contested issues, costs associated with defending the estate against claims (whether or not enforceable), and costs associated with reaching a negotiated settlement of the issues. Expenses incurred merely for the purpose of unreasonably extending the time for payment, or incurred other than in good faith, are not deductible.

(e) *Effective date.* The rules of this section apply to the estates of decedents dying on or after the date of publication of the Treasury decision adopting these rules as final regulations in the **Federal Register**.

Par. 5. Section 20.2053–4 is revised to read as follows:

§ 20.2053–4 Deduction for claims against the estate.

(a) *In general.* (1) For purposes of this section, liabilities imposed by law or arising out of contracts or torts are deductible if they meet the requirements set forth in § 20.2053–1 and this section. Except as provided in paragraph (b) of this section, the amounts that may be deducted as claims against a decedent's estate are limited to amounts for legitimate and bona fide claims that—

(i) Represent personal obligations of the decedent existing at the time of the decedent's death;

(ii) Are enforceable against the decedent's estate at the time of payment; and

(iii) Are actually paid by the estate in settlement of the claim.

(2) Events occurring after the date of a decedent's death shall be considered when determining the amount deductible against a decedent's estate.

(b) *Special rules*—(1) *Potential and unmatured claims.* Claims that are unmatured on the date of the decedent's death and that later mature and are paid are deductible by the estate. However, no deduction may be taken on an estate tax return for a potential or unmatured claim. If the claim matures and is paid prior to the expiration of the period of limitations for filing a claim for refund, the estate may file a claim for refund as provided by section 6511. A protective claim for refund may be filed before the expiration of the period of limitations for claims for refund in order to preserve the estate's right to claim a refund once the claim against the decedent's estate is matured and is paid or may be estimated as provided in § 20.2053–1(b)(4). Although the protective claim need not state a particular dollar amount or demand an immediate refund, the protective claim must identify the outstanding liability or claim that would have been deductible under section 2053(a) had it already been paid, and must describe the reasons and contingencies delaying actual payment of the liability or claim. Action on protective claims will proceed after the executor has notified the Commissioner that the contingency has been resolved.

(2) *Contested claims.* No deduction may be taken on an estate tax return for a claim against the decedent's estate to the extent the estate is contesting the decedent's liability. However, see § 20.2053–1(b)(4) relating to estimated amounts.

(3) *Claims against multiple parties.* If the decedent or the decedent's estate is one of two or more parties against whom the claim is being asserted, the estate may only deduct the portion of the total claim due from and paid by the estate, reduced by the total of any reimbursement received from another party, insurance, or otherwise. The estate's deductible portion will also be reduced by the amount or contribution the estate could have collected from another party or an insurer but which the estate declines or fails to attempt to collect. If, however, the estate establishes that the burden of necessary collection efforts would have outweighed the benefit from those efforts, the potential reimbursement will not reduce the estate's deductible portion of the total claim. If the estate establishes that the party from whom a potential reimbursement could be collected could only pay a portion of the potential reimbursement, then only that portion that could reasonably have been expected to be collected will reduce the estate's deductible portion of the total claim.

(4) *Claims by family members, related entities, or beneficiaries.* Relationships with and among a decedent and the

decedent's family members, related entities, and beneficiaries may create the potential for collusion in asserting invalid or exaggerated claims in order to reduce the decedent's taxable estate. Thus, notwithstanding § 20.2053–1 and paragraph (a) of this section, there will be a rebuttable presumption that claims by a family member of the decedent, a related entity, or a beneficiary of the decedent's estate or revocable trust are not legitimate and bona fide and therefore are not deductible. Evidence sufficient to rebut the presumption may include evidence that the claim arises from circumstances that would reasonably support a similar claim by unrelated persons or non-beneficiaries. Similarly, a settlement between a decedent's estate or revocable trust and a family member, a related entity, or a beneficiary of the decedent's estate or revocable trust will be presumed to not be deductible absent evidence of the legitimacy and bona fide nature of the claim. For purposes of this section, family members include the spouse of the decedent; the grandparents, parents, siblings, and lineal descendants of the decedent or of the decedent's spouse; and the spouse and lineal descendants of any such grandparent, parent, and sibling. Family members include adopted individuals. For purposes of this section, a related entity is an entity in which the decedent, either directly or indirectly, had a beneficial ownership interest at the time of the decedent's death or at any time during the three-year period ending on the decedent's date of death. Such an entity, however, shall not include a publicly-traded entity nor shall it include a closely-held entity in which the combined beneficial interest, either direct or indirect, of the decedent and the decedent's family members, collectively, is less than thirty percent of the beneficial ownership interests (whether voting or non-voting).

(5) *Unenforceable claims.* Claims that are unenforceable prior to or at the decedent's death are not deductible, even if they are actually paid. Claims that become unenforceable during the administration of the estate are not deductible to the extent that they are paid after they become unenforceable. To the extent that enforceability of a claim is at issue, see paragraph (b)(2) of this section relating to contested claims.

(6) *Claims founded upon a promise.* Except with regard to pledges or subscriptions, (see § 20.2053–5), section 2053(c)(1)(A) provides that the deduction for a claim founded upon a promise or agreement is limited to the extent that the promise or agreement was bona fide and in exchange for adequate and full consideration in money or money's worth. For this purpose, bona fide and for adequate and full consideration in money or money's worth requires that the promise or agreement must have been made in good faith, and that the price must have been an adequate and full equivalent reducible to a money value.

(7) *Recurring payments*—(i) *Non-Contingent obligations.* If a decedent is obligated to make recurring payments on an enforceable and certain claim that are not subject to a contingency and if the payments will continue for a period that will likely extend beyond the final determination of the estate tax liability, the obligation may be deducted as an estimated amount using the rules in § 20.2053–1. The amount deductible is the present value of the payments on the decedent's date of death as determined under § 20.2031–7(d). See §§ 20.7520–1 through 20.7520–4. If there is a reasonable likelihood that full satisfaction of the liability will not be made, then the obligation will be deemed to be subject to a contingency for purposes of this section.

(ii) *Contingent obligations.* If a decedent has a recurring obligation to pay an enforceable and certain claim, but the decedent's obligation is subject to a contingency or is otherwise not described in paragraph (b)(7)(i) of this section, the estate's deduction is limited to amounts actually paid by the estate in satisfaction of the claim.

(iii) *Purchase of commercial annuity to satisfy recurring obligation to pay.* If a decedent has a recurring obligation (whether or not contingent) to pay an enforceable and certain claim and the estate purchases a commercial annuity from an unrelated dealer in commercial annuities in an arms-length transaction to satisfy the obligation, the amount deductible by the estate is the sum of—

(A) The amount paid for the commercial annuity; and

(B) Any amount actually paid to the claimant by the estate prior to the purchase of the commercial annuity.

(c) *Interest on claims.* The interest on a deductible claim is itself deductible as a claim under section 2053, but only to the extent of the amount of interest accrued at the date of the decedent's death and actually paid, even if the executor elects the alternate valuation method under section 2032. (Post-death accrued interest may be deductible in appropriate circumstances either as an estate tax administration expense under section 2053 or as an income tax deduction.)

(d) *Examples.* The following examples illustrate the application of paragraphs (a) through (c) of this section. Except as is otherwise provided in the examples, assume that the claimant (C) is not a family member, related entity or beneficiary of the decedent (D) and is not the executor (E). Assume that a claim represents a personal obligation of D existing at the time of D's death and is enforceable against D's estate. Assume that the payment of the claim, where applicable, is made out of property subject to claims (as defined in section 2053(c)(2) and § 20.2053–1(c)(2)) and is allowable by the law of the jurisdiction under which the decedent's estate is being administered, or is paid prior to the filing of the estate tax return (including any extension granted under section 6081) from property not subject to claims. Assume that any court decree is based upon the facts upon which deductibility depends and is consistent with applicable local law. Assume that any settlement is reached in bona fide negotiations between or among parties having adverse interests with respect to the claim and that the terms of the settlement are not inconsistent with applicable local law.

Example 1. Contested claim, single defendant, no decision. D is sued by C for $100x in a tort proceeding and responds asserting affirmative defenses available to D under applicable local law. D dies and E is substituted as defendant in the suit. D's estate tax return is due before a judgment is reached in the case. D's gross estate includes only property subject to claims and exceeds $100x. E may not take a deduction on the return for the claim under section 2053(a)(3). A deduction may be claimed on the return, however, for expenses incurred prior to the filing of the estate tax return in defending the estate against the claim if the expenses have been paid in accordance with § 20.2053–3(c) or (d)(3) or as an estimate under § 20.2053–1(b)(4). E may file a protective claim for refund before the expiration of the period of limitations for claims for refund of the estate tax in order to preserve the estate's right to claim a refund if the amount of the liability will not be paid or cannot be ascertained with reasonable certainty by the expiration of that period of limitations. If payment is subsequently made pursuant to a court decision or a settlement, a deduction for the payment, as well as expenses incurred incident to the claim and not previously deducted, may be taken and relief may be sought by supplementing a previously filed protective claim or by filing a claim for refund as provided by section 6511.

Example 2. Contested claim, single defendant, final court decree and payment. The facts are the same as in *Example 1* except that, before the return is timely filed, the court enters a decision in favor of C, no timely appeal is filed, and payment is made. A deduction is allowed for the amount paid in satisfaction of the claim pursuant to the final decision of the local court, including any interest accrued prior to D's death, under section 2053(a)(3). In addition, a deduction may be available under § 20.2053–3(d)(3) for expenses incurred prior to the filing of the

estate tax return in defending the estate against the claim and in processing payment of the claim.

Example 3. Contested claim, single defendant, settlement and payment. The facts are the same as in *Example 1* except that, before the return is timely filed, a settlement is reached between D's estate and C for $80x and payment is made. A deduction is allowed for the amount of the settlement paid to C ($80x) under section 2053(a)(3). In addition, a deduction may be available under § 20.2053–3(d)(3) for expenses incurred prior to the filing of the estate tax return in defending the estate, reaching a settlement, and processing payment of the claim.

Example 4. Contested claim, multiple defendants. The facts are the same as in *Example 1* except that the suit filed by C lists D and K, an unrelated third-party, as defendants. If the claim is not resolved prior to the time the estate tax return is filed, E may not take a deduction for the claim under section 2053(a)(3) on the return. If payment is subsequently made of D's share of the claim pursuant to a court decision or a settlement holding D liable for 40 percent of the amount due and K liable for 60 percent of the amount due, then the estate may take a deduction for the amount paid in satisfaction of the claim representing D's share of the liability as assigned by the court decree ($40x), plus any interest on that share accrued prior to D's death, under section 2053(a)(3). If the court decision finds D and K jointly and severally liable for the entire $100x and D's estate pays the entire $100x but could have reasonably collected $50x from K in reimbursement, the estate may take a deduction under section 2053(a)(3) and paragraph (b)(3) of this section for only $50x and the interest on $50x accrued prior to D's death. In both instances, a deduction may also be available under § 20.2053–3(d)(3) for expenses incurred and not previously deducted in defending the estate against the claim and processing payment of the amount due from D.

Example 5. Contested claim, multiple defendants, settlement and payment. The facts are the same as in *Example 1* except that the suit filed by C lists D and K, an unrelated third-party, as defendants. D's estate settles with C for $10x and payment is made before the return is timely filed. E may take a deduction for the amount paid to C in satisfaction of the claim. In addition, a deduction may be available under § 20.2053–3(d)(3) for expenses incurred prior to the filing of the estate tax return in defending the estate, reaching a settlement, and processing payment of the claim.

Example 6. Mixed claims. During life, D contracts with C to perform specific work on D's home for $75x. Under the contract, additional work must be approved in advance by D. C performs additional work and sues D for $100x for work completed including the $75x agreed to in the contract. D dies and D's estate tax return is due before a judgment is reached in the case. E contests liability for $25x. E may take a deduction on the return for $75x if it has been paid or if it meets the requirements of an estimated amount. In addition, a deduction may be claimed on the return for expenses incurred in defending the estate against the claim if they have been paid under § 20.2053–3(c) or (d)(3) or as an estimate under § 20.2053–1(b)(4). E may file a protective claim for refund before the expiration of the period of limitations on claims for refund of the estate tax in order to preserve the estate's right to claim a refund if payment on any amount in excess of $75x is subsequently made in resolution of a claim that would qualify for a deduction under section 2053. To the extent that the expenses incurred in defending the estate against the claim are not deducted as an estimate, they may be included in the protective claim for refund.

Example 7. Unenforceable claims. D is sued by C for $100x in a tort proceeding but the claim is barred by the applicable period of limitations and there is no other recourse available to C. A deduction is not allowed for the claim under section 2053(a)(3) whether or not the estate actually pays money in satisfaction of the claim. A deduction may be available, however, under § 20.2053–3(d)(3) for expenses incurred in defending the estate against the claim.

Example 8. Non-contingent and recurring obligation to pay, binding on estate. D's property settlement agreement incident to D's divorce, signed three years prior to D's death, obligates D or D's estate to pay to S, D's former spouse, $20x per year for 10 years. The payments are not conditioned on whether or not S remarries. If S dies prior to the last payment, the terms of the agreement state that the remaining payments are to be made to S's estate or as S may appoint in S's will. Prior to filing D's estate tax return, D's estate pays the first of the 7 payments remaining as of D's death. The estate may take a deduction for the present value of these payments. See §§ 20.7520–1 through 20.7520–4.

Example 9. Contingent recurring obligation to pay, binding on estate. D's property settlement agreement incident to D's divorce, signed three years prior to D's death, obligates D or D's estate to pay to S, D's former spouse, $20x per year for 10 years. The obligation to make the annual payments ceases upon S's remarriage or S's death prior to the due date of the last payment. Prior to filing D's estate tax return, D's estate pays the first of the 7 payments remaining as of D's death. E may take as a deduction on the return the amount of the 1 payment made prior to the filing of D's estate tax return. Additional payments become deductible as they are paid. E may file a protective claim for refund before the expiration of the period of limitations for claims for refund of the estate tax in order to preserve the estate's right to claim a refund if the amount of the liability will not be paid or is not ascertainable with reasonable certainty by the expiration of the applicable period of limitations. If the total amount to be paid in satisfaction of the liability is not ascertainable with reasonable certainty at the time of examination of the return, relief may be sought by a claim for refund (either actual or protective) as provided by section 6511.

Example 10. Recurring obligation to pay, estate purchases a commercial annuity in satisfaction. D's property settlement agreement incident to D's divorce, signed three years prior to D's death, obligates D or D's estate to pay to S, D's former spouse, $20x per year for 10 years. D's estate purchases a commercial annuity from an unrelated dealer in commercial annuities, XYZ, in a bona fide sale to satisfy the obligation to S. E may deduct the entire amount paid to XYZ to obtain the annuity, regardless of whether or not the obligation to S was contingent.

(e) *Effective date.* The rules of this section apply to the estates of decedents dying on or after the date of publication of the Treasury decision adopting these rules as final regulations in the **Federal Register**.

Par. 6. Section 20.2053–6 is amended by revising paragraphs (a) and (c) and adding new paragraphs (g) and (h) to read as follows:

§ 20.2053–6 Deduction for taxes.

(a) *In general.* Taxes are deductible in computing a decedent's gross estate only as claims against the estate (except to the extent that excise taxes may be allowable as administration expenses), and only to the extent not disallowed by section 2053(c)(1)(B) (see the remaining paragraphs of this section). However, see §§ 20.2053–9 and 20.2053–10 with respect to the deduction allowed for certain state and foreign death taxes.

* * * * *

(c) *Death taxes.* (1) For the estates of decedents dying on or before December 31, 2004, no estate, succession, legacy or inheritance tax payable by reason of the decedent's death is deductible, except as provided in § 20.2053–9 and § 20.2053–10 with respect to certain state and foreign death taxes on transfers for charitable, etc., uses. However, see sections 2011 and 2014 and these regulations with respect to credits for death taxes.

(2) For the estates of decedents dying after December 31, 2004, see section 2058 to determine the deductibility of state death taxes.

* * * * *

(g) *Post-death adjustments of deductible tax liability.* Post-death adjustments increasing a tax liability accrued prior to the decedent's death, including increases of taxes deducted under this section, will increase the amount of the deduction taken under section 2053(a)(3) for that tax liability. Similarly, any refund subsequently determined to be due to and received by the estate with respect to taxes deducted by the estate under this section reduces the amount of the deduction taken for that tax liability under section 2053(a)(3). Expenses associated with defending the estate against the increase in tax liability or with obtaining the

refund may be deductible under § 20.2053–3(d)(3). A protective claim for refund of estate taxes may be filed before the expiration of the period of limitations for claims for refund in order to preserve the estate's right to claim a refund if the amount of a deductible tax liability may be affected by such an adjustment or refund. The application of this section may be illustrated by the following examples:

Example 1. Increase in tax due. After the decedent's death, the Internal Revenue Service examines the gift tax return filed by the decedent in the year before the decedent's death and asserts a deficiency of $100x. The estate spends $30x in a non-frivolous defense against the increased deficiency. The final determination of the deficiency, in the amount of $90x, is paid by the estate. The estate may deduct $90× under section 2053(a)(3) and $30x under § 20.2053–3(c)(2) or (d)(3).

Example 2. Refund of taxes paid. Decedent's estate timely files D's individual income tax return for the year in which the decedent died. The estate timely pays the entire amount of the tax due, $50x, as shown on that return. The entire $50x was attributable to income received prior to the decedent's death. Decedent's estate subsequently discovers an error on the income tax return and files a timely claim for refund. Decedent's estate receives a refund of $10x. The estate is only allowed a deduction of $40x under section 2053(a)(3) for the income tax liability accrued prior to the decedent's death. If a deduction for $50x was allowed on the estate tax return prior to the receipt of the refund, it shall be the duty of the executor to notify the Commissioner of the change and to pay the resulting tax, with interest.

(h) *Effective date.* The rules of this section apply to the estates of decedents dying on or after the date of publication of the Treasury decision adopting these rules as final regulations in the **Federal Register**.

Par. 7. Section 20.2053–9 is amended as follows:

1. Revising the heading for paragraph (a) and adding a sentence at the end of paragraph (a).
2. Revising the first and last sentences of paragraph (c).
3. Adding new paragraph (f).

The revisions and addition read as follows:

§ 20.2053–9 Deduction for certain state death taxes.

(a) *General rules for the estates of decedents dying on or before December 31, 2004.* * * * For the estates of decedents dying after December 31, 2004, see section 2058 to determine the deductibility of state death taxes.

* * * * *

(c) *Exercise of election.* The election to take a deduction for a state death tax imposed upon a transfer for charitable, etc., uses shall be exercised by the executor by the filing of a written notification to that effect with the Commissioner. * * * The election may be revoked by the executor by the filing of a written notification to that effect with the Commissioner at any time before the expiration of such period.

* * * * *

(f) *Effective date.* The rules of this section apply to the estates of decedents dying on or before December 31, 2004.

Par. 8. Section 20.2053–10 is amended by revising paragraph (c) and adding a new paragraph (e) to read as follows:

§ 20.2053–10 Deduction for certain foreign death taxes.

* * * * *

(c) *Exercise of election.* The election to take a deduction for a foreign death tax imposed upon a transfer for charitable, etc., uses shall be exercised by the executor by the filing of a written notification to that effect with the Commissioner. An election to take the deduction for foreign death taxes is deemed to be a waiver of the right to claim a credit under a treaty with any foreign country for any tax or portion thereof claimed as a deduction under this section. The notification shall be filed before the expiration of the period of limitations for assessment provided in section 6501 (usually 3 years from the last day for filing the return). The election may be revoked by the executor by the filing of a written notification to that effect with the Commissioner at any time before the expiration of such period.

* * * * *

(e) *Effective date.* The rules of this section apply to the estates of decedents dying on or after the date of publication of the Treasury decision adopting these rules as final regulations in the **Federal Register**.

Kevin M. Brown,

Deputy Commissioner for Services and Enforcement.

[FR Doc. E7–7601 Filed 4–20–07; 8:45 am]

BILLING CODE 4830–01–P

DEPARTMENT OF HOMELAND SECURITY

Coast Guard

33 CFR Part 165

[CGD13–07–009]

RIN 1625–AA00

Safety Zones: Fireworks Displays in the Captain of the Port Portland Zone

AGENCY: Coast Guard, DHS.

ACTION: Notice of proposed rulemaking.

SUMMARY: The Coast Guard is proposing to amend its regulations to establish additional safety zones on the waters of the Columbia River located in the Area of Responsibility (AOR) of the Captain of the Port, Portland, Oregon during annual fireworks displays. The Captain of the Port, Portland Oregon is taking this action to safeguard watercraft and their occupants from safety hazards associated with these displays. Entry into these zones is prohibited unless authorized by the Captain of the Port.

DATES: Comments and related material must reach the Coast Guard on or before May 23, 2007.

ADDRESSES: You may mail comments and related material to Petty Officer Michelle Duty at Sector Portland 6767 N. Basin Ave., Portland, OR 97217. Sector Portland maintains the public docket for this rulemaking. Comments and material received from the public, as well as documents indicated in this preamble as being available in the docket, will become part of this docket and will be available for inspection or copying at Sector Portland between 8 a.m. and 4 p.m., Monday through Friday, except Federal holidays.

FOR FURTHER INFORMATION CONTACT: Petty Officer Michelle Duty, c/o Captain of the Port, Portland 6767 N. Basin Avenue, Portland, Oregon 97217, 503–240–2590.

SUPPLEMENTARY INFORMATION:

Request for Comments

We encourage you to participate in this rulemaking by submitting comments and related material. If you do so, please include your name and address, identify the docket number for this rulemaking (CGD13–07–009), indicate the specific section of this document to which each comment applies, and give the reason for each comment. Please submit all comments and related material in an unbound format, no larger than 8½ by 11 inches, suitable for copying. If you would like to know they reached us, please enclose a stamped, self-addressed postcard or

envelope. We will consider all comments and material received during the comment period. We may change this proposed rule in view of them.

Public Meeting

We do not now plan to hold a public meeting. But you may submit a request for a meeting by writing to Sector Portland at the address under **ADDRESSES** explaining why one would be beneficial. If we determine that one would aid this rulemaking, we will hold one at a time and place announced by a later notice in the **Federal Register**.

Background and Purpose

The Coast Guard is proposing establish additional permanent safety zones to allow for safe annual fireworks displays. All events occur within the Captain of the Port, Portland, OR, Area of Responsibility (AOR). These events may result in a number of vessels congregating near fireworks launching barges and sites. The safety zones are needed to protect watercraft and their occupants from safety hazards associated with fireworks displays. These safety zones will be enforced by representatives of the Captain of the Port, Portland, Oregon. The Captain of the Port may be assisted by other federal and local agencies.

Discussion of Proposed Rule

This proposed rule, for safety concerns, will control vessels, personnel and individual movements in a regulated area surrounding the following fireworks events: Hillman 4th of July Fireworks Display, Vancouver WA; East County 4th of July Fireworks Gresham, OR; Port of Cascade Locks July 4th Display, Cascade Locks OR; Gladstone 4th of July Celebration, Gladstone, OR. Entry into these zones is prohibited unless authorized by the Captain of the Port, Portland or his designated representative. Captain of the Port, Portland, Oregon, will enforce these safety zones. The Captain of the Port may be assisted by other federal and local agencies.

Regulatory Evaluation

This proposed rule is not a ''significant regulatory action'' under section 3(f) of Executive Order 12866, Regulatory Planning and Review, and does not require an assessment of potential costs and benefits under section 6(a)(3) of that Order. The Office of Management and Budget has not reviewed it under that Order. It is not ''significant'' under the regulatory policies and procedures of the Department of Homeland Security (DHS). We expect the economic impact of this proposed rule to be so minimal that a full Regulatory Evaluation under the regulatory policies and procedures of DHS is unnecessary. This expectation is based on the fact that the regulated areas established by the regulation will be of limited duration and encompass small portions of the Columbia River in the Portland AOR in the evening when vessel traffic is low.

Small Entities

Under the Regulatory Flexibility Act (5 U.S.C. 601–612), we have considered whether this proposed rule would have a significant economic impact on a substantial number of small entities. The term ''small entities'' comprises small businesses, not-for-profit organizations that are independently owned and operated and are not dominant in their fields, and governmental jurisdictions with populations of less than 50,000.

This proposed rule will affect the following entities, some of which may be small entities: The owners or operators of vessels intending to transit a portion of the Columbia River during the times mentioned in proposed regulation text § 165.1315(a)(15–18) at the conclusion of this proposed rule.

The Coast Guard certifies under 5 U.S.C. 605(b) that this rule will not have a significant economic impact on a substantial number of small entities. These safety zones will not have significant economic impact on a substantial number of small entities for the following reasons. This rule will be in effect for only three hours during the evenings when vessel traffic is low. Traffic will be allowed to pass through the zone with the permission of the Captain of the Port or his designated representatives on scene, if safe to do so.

If you think that your business, organization, or governmental jurisdiction qualifies as a small entity and that this rule would have a significant economic impact on it, please submit a comment (see **ADDRESSES**) explaining why you think it qualifies and how and to what degree this rule would economically affect it.

Assistance for Small Entities

Under section 213(a) of the Small Business Regulatory Enforcement Fairness Act of 1996 (Public Law 104–121), we want to assist small entities in understanding this proposed rule so that they can better evaluate its effects on them and participate in the rulemaking. If the rule would affect your small business, organization, or governmental jurisdiction and you have questions concerning its provisions or options for compliance; please contact Petty Officer Michelle Duty by phone at 503–247–4015 or by e-mail at Michelle.K.Duty@uscg.mil. The Coast Guard will not retaliate against small entities that question or complain about this rule or any policy or action of the Coast Guard.

Collection of Information

This proposed rule would call for no new collection of information under the Paperwork Reduction Act of 1995 (44 U.S.C. 3501–3520.).

Federalism

A rule has implications for federalism under Executive Order 13132, Federalism, if it has a substantial direct effect on State or local governments and would either preempt State law or impose a substantial direct cost of compliance on them. We have analyzed this proposed rule under that Order and have determined that it does not have implications for federalism.

Unfunded Mandates Reform Act

The Unfunded Mandates Reform Act of 1995 (2 U.S.C. 1531–1538) requires Federal agencies to assess the effects of their discretionary regulatory actions. In particular, the Act addresses actions that may result in the expenditure by a State, local, or tribal government, in the aggregate, or by the private sector of $100,000,000 or more in any one year. Though this proposed rule would not result in such expenditure, we do discuss the effects of this proposed rule elsewhere in this preamble.

Taking of Private Property

This proposed rule would not affect a taking of private property or otherwise have taking implications under Executive Order 12630, Governmental Actions and Interference with Constitutionally Protected Property Rights.

Civil Justice Reform

This proposed rule meets applicable standards in sections 3(a) and 3(b)(2) of Executive Order 12988, Civil Justice Reform, to minimize litigation, eliminate ambiguity, and reduce burden.

Protection of Children

We have analyzed this proposed rule under Executive Order 13045, Protection of Children from Environmental Health Risks and Safety Risks. This rule is not an economically significant rule and would not create an environmental risk to health or risk to safety that might disproportionately affect children.

Indian Tribal Governments

This proposed rule does not have tribal implications under Executive Order 13175, Consultation and Coordination with Indian Tribal Governments, because it would not have a substantial direct effect on one or more Indian tribes, on the relationship between the Federal Government and Indian tribes, or on the distribution of power and responsibilities between the Federal Government and Indian tribes.

Energy Effects

We have analyzed this proposed rule under Executive Order 13211, Actions Concerning Regulations That Significantly Affect Energy Supply, Distribution, or Use. We have determined that it is not a ''significant energy action'' under that order because it is not a ''significant regulatory action'' under Executive Order 12866 and is not likely to have a significant adverse effect on the supply, distribution, or use of energy. The Administrator of the Office of Information and Regulatory Affairs has not designated it as a significant energy action. Therefore, it does not require a Statement of Energy Effects under Executive Order 13211.

Technical Standards

The National Technology Transfer and Advancement Act (NTTAA) (15 U.S.C. 272 note) directs agencies to use voluntary consensus standards in their regulatory activities unless the agency provides Congress, through the Office of Management and Budget, with an explanation of why using these standards would be inconsistent with applicable law or otherwise impractical. Voluntary consensus standards are technical standards (*e.g.*, specifications of materials, performance, design, or operation; test methods; sampling procedures; and related management systems practices) that are developed or adopted by voluntary consensus standards bodies.

This proposed rule does not use technical standards. Therefore, we did not consider the use of voluntary consensus standards.

Environment

We have analyzed this proposed rule under Commandant Instruction M16475.lD, which guides the Coast Guard in complying with the National Environmental Policy Act of 1969 (NEPA) (42 U.S.C. 4321–4370f), and have concluded that there are no factors in this case that would limit the use of a categorical exclusion under section 2.B.2 of the Instruction. Therefore, this rule is categorically excluded, under figure 2–1, paragraph (34)(g), of the Instruction, from further environmental documentation. This rule establishes safety zones which have duration of no more than three hours each.

A final ''Environmental Analysis Check List'' and a final ''Categorical Exclusion Determination'' will be available in the docket where indicated under **ADDRESSES**.

List of Subjects in 33 CFR Part 165

Harbors, Marine safety, Navigation (water), Reporting and Recordkeeping Requirements, Security measures, Waterways.

For the reasons discussed in the preamble, the Coast Guard proposes to amend 33 CFR part 165 as follows:

PART 165—REGULATED NAVIGATION AREAS AND LIMITED ACCESS AREAS

1. The authority citation for part 165 continues to read as follows:

Authority: 33 U.S.C. 1226, 1231; 46 U.S.C. Chapter 701; 50 U.S.C. 191, 195; 33 CFR 1.05–1(g), 6.04–1, 6.04–6 and 160.5; Pub. L. 107–295, 116 Stat. 2064; Department of Homeland Security Delegation No. 0170.1.

2. Amend § 165.1315 by adding paragraphs (a)(15) through (18) and (b)(2) to read as follows.

§ 165.1315 Safety Zones: Fireworks displays in the Captain of the Port Portland Zone.

(a) * * *

(15) Hillman 4th of July Fireworks Display, Vancouver WA:

(i) *Location.* All water of the Columbia River forming a 600 foot radius from the land launching point of: 45°35′46″ N, 122°32′22″ W.

(ii) *Enforcement Period.* This section is enforced annually on July fourth from approximately 8:30 p.m. to 11:30 p.m. (PDT).

(16) East County 4th of July Fireworks Gresham, OR

(i) *Location.* All water of the Columbia River forming a 600 foot radius from the land launching point: 45°33′ 33″ N, 122°27′03″ W in the vicinity of Blue Lake Park.

(ii) *Enforcement Period.* This section is enforced annually on July fourth from 8:30 p.m. to 11:30 p.m. (PDT).

(17) *Port of Cascade Locks July 4th Display, Cascade Locks OR.*

(i) *Location.* All water of the Columbia River forming a 600 foot radius from the land launching point: 45°40′16″ N 121°53′38″ W the North point of Thunder Island.

(ii) *Enforcement Period.* This section is enforced annually on July fourth from 8:30 p.m. to 11:30 p.m. (PDT).

(18) *Gladstone 4th of July Celebration, Gladstone, OR*

(i) *Location.* All water of the Columbia River forming a 800 foot radius from the land launching point: 45°22′21″ N, 122°36′34″ W.

(ii) *Enforcement Period.* This section is enforced annually on July fourth from 8:30 p.m. to 11:30 p.m. (PDT).

(b) * * *

(2) *Designated representative* means Coast Guard Patrol Commanders, including Coast Guard coxswains, petty officers or other officers operating Coast Guard vessel and a Federal, State, and local officers designated by or assisting the Captain of the Port Portland (COTP) in the enforcement of the safety zone.

* * * * *

Dated: March 20, 2007.

Patrick G. Gerrity,

Captain, U.S. Coast Guard, Captain of the Port, Portland, OR.

[FR Doc. E7–7634 Filed 4–20–07; 8:45 am]

BILLING CODE 4910–15–P

DEPARTMENT OF HOMELAND SECURITY

Coast Guard

33 CFR Part 165

[CGD09–07–013]

RIN 1625–AA00

Safety Zone, Kenosha Harbor, Kenosha, WI

AGENCY: Coast Guard, DHS.

ACTION: Notice of proposed rulemaking.

SUMMARY: The Coast Guard proposes to establish a temporary safety zone near Kenosha Harbor, Kenosha, Wisconsin. This zone is intended to control the movement of vessels on portions of Lake Michigan during the Spill Of National Significance (SONS) exercise on June 19 and 20, 2007. This zone is necessary to protect the public from the hazards associated with ships and boats deploying oil containment equipment.

DATES: Comments and related material must reach the Coast Guard on or before May 8, 2007.

ADDRESSES: You may mail comments and related material to Commander, Coast Guard Sector Lake Michigan (spw), 2420 South Lincoln Memorial Drive, Milwaukee, WI 53207. The Sector Lake Michigan Prevention Department maintains the public docket for this rulemaking. Comments and material received from the public, as well as documents indicated in this preamble as being available in the docket, will become part of this docket and will be available for inspection or copying at

the Sector Lake Michigan Prevention Department between 8 a.m. and 3 p.m., Monday through Friday, except Federal holidays.

FOR FURTHER INFORMATION CONTACT: CWO Brad Hinken, Prevention Department, Coast Guard Sector Lake Michigan, Milwaukee, WI at (414) 747–7154.

SUPPLEMENTARY INFORMATION:

Request for Comments

We encourage you to participate in this rulemaking by submitting comments and related material. If you do so, please include your name and address, identify the docket number for this rulemaking [CGD09–07–013], indicate the specific section of this document to which each comment applies, and give the reason for each comment. Please submit all comments and related material in an unbound format, no larger than 8½ by 11 inches, suitable for copying. If you would like to know they reached us, please enclose a stamped, self-addressed postcard or envelope. We will consider all comments and material received during the comment period. We may change this proposed rule in view of them.

Public Meeting

We do not now plan to hold a public meeting. But you may submit a request for a meeting by writing to the Sector Lake Michigan Prevention Department at the address under **ADDRESSES** explaining why one would be beneficial. If we determine that one would aid this rulemaking, we will hold one at a time and place announced by a later notice in the **Federal Register**.

Background and Purpose

This temporary safety zone is necessary to ensure the safety of vessels and people from hazards associated with numerous vessels deploying oil containment boom and conducting diving operations. Based on the experiences in other Captain of the Port zones, the Captain of the Port Lake Michigan has determined numerous vessels engaged in the deployment of oil containment boom in close proximity to watercraft pose significant risk to public safety and property. The likely combination of large numbers of recreation vessels and congested waterways could result in serious injuries or fatalities. Establishing a safety zone to control vessel movement around the location of the SONS exercise will help ensure the safety of persons and property at these events and help minimize the associated risks.

The comment period for this rule is only 15 days because the request for the safety zone was not received in time to allow for a longer period. Delaying this rule would be contrary to the public interest of ensuring the safety of vessels during this event and immediate action is necessary to prevent possible loss of life or property.

Discussion of Proposed Rule

A temporary safety zone is necessary to ensure the safety of vessels during the deployment and recovery of oil containment boom in conjunction with the SONS exercise. The zone will be enforced between 8 a.m. (local) and 6 p.m. (local) on June 19 and 20, 2007.

The safety zone for the SONS exercise will encompass all waters of Lake Michigan 2,300 yards north of Kenosha Breakwater Light (Lightlist number 20430) and from the shoreline to 1,500 yards east Kenosha Breakwater Light (Lightlist number 20430) and bounded by a line with of point origin at 42°36′29″ N, 087°47′17″ W; then west to 42°36′29″ N, 087°49′07″ W; then south along the shoreline to 42°35′19″ N, 087°48′41″ W; then east, northeast to 42°35′24″ N, 087°47′17″ W; then north to the point of origin (NAD 83).

All persons and vessels shall comply with the instructions of the Coast Guard Captain of the Port or the designated on-scene representative. Entry into, transiting, or anchoring within the safety zone is prohibited unless authorized by the Captain of the Port Lake Michigan or his designated on-scene representative. The Captain of the Port or his designated on-scene representative may be contacted via VHF Channel 16.

Regulatory Evaluation

This proposed rule is not a ''significant regulatory action'' under section 3(f) of Executive Order 12866, Regulatory Planning and Review, and does not require an assessment of potential costs and benefits under section 6(a)(3) of that Order. The Office of Management and Budget has not reviewed it under that Order.

We expect the economic impact of this proposed rule to be so minimal that a full Regulatory Evaluation is unnecessary.

The Coast Guard will only use this safety zone for 10 hours a day on the two days specified. This safety zone has been designed to allow vessels to transit unrestricted to portions of the harbor not affected by the zone. The Captain of the Port will allow vessel to enter and depart Kenosha Harbor. The Coast Guard expects insignificant adverse impact to mariners from the activation of this zone.

Small Entities

Under the Regulatory Flexibility Act (5 U.S.C. 601–612), we have considered whether this proposed rule would have a significant economic impact on a substantial number of small entities. The term ''small entities'' comprises small businesses, not-for-profit organizations that are independently owned and operated and are not dominant in their fields, and governmental jurisdictions with populations of less than 50,000.

The Coast Guard certifies under 5 U.S.C. 605(b) that this proposed rule would not have a significant economic impact on a substantial number of small entities.

This proposed rule would affect the following entities, some of which might be small entities: The owners of vessels intending to transits or anchor in a portion of Lake Michigan between 8 p.m. (local) and 6 p.m. (local) on June 19, 2007 and June 20, 2007. The safety zone would not have a significant economic impact on a substantial number of small entities for the following reasons. This rule would be in effect for only 20 hours. Vessel traffic can safely pass around the safety zone and enter and depart Kenosha Harbor.

If you think that your business, organization, or governmental jurisdiction qualifies as a small entity and that this rule would have a significant economic impact on it, please submit a comment (see **ADDRESSES**) explaining why you think it qualifies and how and to what degree this rule would economically affect it.

Assistance for Small Entities

Under section 213(a) of the Small Business Regulatory Enforcement Fairness Act of 1996 (Pub. L. 104–121), we want to assist small entities in understanding this proposed rule so that they can better evaluate its effects on them and participate in the rulemaking. If the rule would affect your small business, organization, or governmental jurisdiction and you have questions concerning its provisions or options for compliance, please contact CWO Brad Hinken, Prevention Department, Coast Guard Sector Lake Michigan, Milwaukee, WI at (414) 747–7154. The Coast Guard will not retaliate against small entities that question or complain about this rule or any policy or action of the Coast Guard.

Collection of Information

This proposed rule would call for no new collection of information under the Paperwork Reduction Act of 1995 (44 U.S.C. 3501–3520).

Federalism

A rule has implications for federalism under Executive Order 13132, Federalism, if it has a substantial direct effect on State or local governments and would either preempt State law or impose a substantial direct cost of compliance on them. We have analyzed this proposed rule under that Order and have determined that it does not have implications for federalism.

Unfunded Mandates Reform Act

The Unfunded Mandates Reform Act of 1995 (2 U.S.C. 1531–1538) requires Federal agencies to assess the effects of their discretionary regulatory actions. In particular, the Act addresses actions that may result in the expenditure by a State, local, or tribal government, in the aggregate, or by the private sector of $100,000,000 or more in any one year. Though this proposed rule would not result in such an expenditure, we do discuss the effects of this rule elsewhere in this preamble.

Taking of Private Property

This proposed rule would not effect the taking of private property or otherwise have taking implications under Executive Order 12630, Governmental Actions and Interference with Constitutionally Protected Property Rights.

Civil Justice Reform

This proposed rule meets applicable standards in sections 3(a) and 3(b)(2) of Executive Order 12988, Civil Justice Reform, to minimize litigation, eliminate ambiguity, and reduce burden.

Protection of Children

We have analyzed this proposed rule under Executive Order 13045, Protection of Children from Environmental Health Risks and Safety Risks. This rule is not an economically significant rule and would not create an environmental risk to health or risk to safety that might disproportionately affect children.

Indian Tribal Governments

The Coast Guard recognizes the treaty rights of Native American Tribes. Moreover, the Coast Guard is committed to working with Tribal Governments to implement local policies and to mitigate tribal concerns. We have determined that this safety zone and fishing rights protection need not be incompatible. We have also determined that this proposed Rule does not have tribal implications under Executive Order 13175, Consultation and Coordination with Indian Tribal Governments, because it does not have a substantial direct effect on one or more Indian tribes, on the relationship between the Federal Government and Indian tribes, or on the distribution of power and responsibilities between the Federal Government and Indian tribes. Nevertheless, Indian Tribes that have questions concerning the provisions of this Proposed Rule or options for compliance are encourage to contact the point of contact listed under **FOR FURTHER INFORMATION CONTACT**.

Energy Effects

We have analyzed this proposed rule under Executive Order 13211, Actions Concerning Regulations That Significantly Affect Energy Supply, Distribution, or Use. We have determined that it is not a ''significant energy action'' under that order because it is not a ''significant regulatory action'' under Executive Order 12866 and is not likely to have a significant adverse effect on the supply, distribution, or use of energy. The Administrator of the Office of Information and Regulatory Affairs has not designated it as a significant energy action. Therefore, it does not require a Statement of Energy Effects under Executive Order 13211.

Technical Standards

The National Technology Transfer and Advancement Act (NTTAA) (15 U.S.C. 272 note) directs agencies to use voluntary consensus standards in their regulatory activities unless the agency provides Congress, through the Office of Management and Budget, with an explanation of why using these standards would be inconsistent with applicable law or otherwise impractical. Voluntary consensus standards are technical standards (e.g., specifications of materials, performance, design, or operation; test methods; sampling procedures; and related management systems practices) that are developed or adopted by voluntary consensus standards bodies.

This proposed rule does not use technical standards. Therefore, we did not consider the use of voluntary consensus standards.

Environment

We have analyzed this proposed rule under Commandant Instruction M16475.lD and Department of Homeland Security Management Directive 5100.1, which guide the Coast Guard in complying with the National Environmental Policy Act of 1969 (NEPA)(42 U.S.C. 4321–4370f), and have made a preliminary determination that there are no factors in this case that would limit the use of a categorical exclusion under section 2.B.2 of the Instruction. Therefore, we believe that this rule should be categorically excluded, under figure 2–1, paragraph (34)(g) of the Instruction, from further environmental documentation. This proposed rule establishes a regulated navigation area and as such is covered by this paragraph.

A preliminary ''Environmental Analysis Check List'' is available in the docket where indicated under **ADDRESSES**. Comments on this section will be considered before we make the final decision on whether this rule should be categorically excluded from further environmental review.

List of Subjects in 33 CFR Part 165

Harbors, Marine safety, Navigation (water), Reporting and record keeping requirements, Security measures, Waterways.

For the reasons discussed in the preamble, the Coast Guard proposes to amend 33 CFR part 165 as follows:

PART 165—REGULATED NAVIGATION AREAS AND LIMITED ACCESS AREAS

1. The authority citation for part 165 continues to read as follows:

Authority: 33 U.S.C. 1226, 1231; 46 U.S.C. Chapter 701; 50 U.S.C. 191, 195; 33 CFR 1.05–1(g), 6.04–1, 6.04–6, and 160.5; Pub. L. 107–295, 116 Stat. 2064; Department of Homeland Security Delegation No. 0170.1.

2. Add § 165.T09–013 to read as follows:

§ 165.T09–013 Safety Zone, Kenosha Harbor, Kenosha, WI.

(a) *Location.* The following area is a temporary safety zone: all waters of Lake Michigan 2,300 yards north of Kenosha Breakwater Light (Lightlist number 20430) and from the shoreline to 1,500 yards east Kenosha Breakwater Light (Lightlist number 20430) and bounded by a line with of point origin at 42°36′29″ N, 087°47′17″ W; then west to 42°36′29″ N, 087°49′07″ W; then south along the shoreline to 42°35′19″ N, 087°48′41″ W; then east, northeast to 42°35′24″ N, 087°47′17″ W; then north to the point of origin (NAD 83).

(b) *Effective period.* This regulation is effective from 8 a.m. (local) on June 19, 2007 to 6 p.m. (local) on June 20, 2007.

(c) *Enforcement period.* This regulation will be enforced from 8 a.m. (local) to 6 p.m. (local) on June 19, 2007 and from 8 a.m. (local) to 6 p.m. (local) on June 20, 2007.

(d) *Regulations.* (1) In accordance with the general regulations in section 165.23 of this part, entry into, transiting, or anchoring within this safety zone is prohibited unless authorized by the

Captain of the Port Lake Michigan, or his designated on-scene representative.

(2) This safety zone is closed to all vessel traffic, except as may be permitted by the Captain of the Port Lake Michigan or his designated on-scene representative.

(3) The ''on-scene representative'' of the Captain of the Port is any Coast Guard commissioned, warrant or petty officer who has been designated by the Captain of the Port to act on his behalf. The on-scene representative of the Captain of the Port will be aboard either a Coast Guard or Coast Guard Auxiliary vessel. The Captain of the Port or his designated on-scene representative may be contacted via VHF Channel 16.

(4) Vessel operators desiring to enter or operate within the safety zone shall contact the Captain of the Port Lake Michigan or his on-scene representative to obtain permission to do so. Vessel operators given permission to enter or operate in the safety zone must comply with all directions given to them by the Captain of the Port Lake Michigan or his on-scene representative.

Dated: April 3, 2007.

Bruce C. Jones,

Captain, U.S. Coast Guard, Captain of the Port Lake Michigan.

[FR Doc. E7–7628 Filed 4–20–07; 8:45 am]

BILLING CODE 4910–15–P

DEPARTMENT OF DEFENSE

GENERAL SERVICES ADMINISTRATION

NATIONAL AERONAUTICS AND SPACE ADMINISTRATION

48 CFR Parts 2, 3, and 52

[FAR Case 2006–007; Docket 2007–0001; Sequence 1; FAR Case 2006–007, Contractor Code of Ethics and Business Conduct]

RIN 9000–AK67

Federal Acquisition Regulation; FAR Case 2006–0007, Contractor Code of Ethics and Business Conduct; Reopening of Comment Period

AGENCIES: Department of Defense (DoD), General Services Administration (GSA), and National Aeronautics and Space Administration (NASA).

ACTION: Proposed rule; Reopening of comment period.

SUMMARY: The Civilian Agency Acquisition Council and the Defense Acquisition Regulations Council (Councils) are proposing to amend the Federal Acquisition Regulation (FAR) to address Contractor Code of Ethics and Business Conduct and the display of Federal agency Office of the Inspector General (OIG) Fraud Hotline Poster. The comment period is extended an additional 30 days to provide additional time for interested parties to review the proposed FAR changes.

DATES: Interested parties should submit comments in writing on or before May 23, 2007 to be considered in the formulation of a proposed rule.

ADDRESSES: Submit comments identified by FAR case 2006–007 by any of the following methods:

• Federal eRulemaking Portal: *http://www.regulations.gov*. Search for any document by first selecting the proper document types and selecting ''Federal Acquisition Regulation'' as the agency of choice. At the ''Keyword'' prompt, type in the FAR case number (for example, FAR Case 2006–007) and click on the ''Submit'' button. Please include any personal and/or business information inside the document.You may also search for any document by clicking on the ''Advanced search/document search'' tab at the top of the screen, selecting from the agency field ''Federal Acquisition Regulation'', and typing the FAR case number in the keyword field. Select the ''Submit'' button.

• Fax: 202–501–4067.

• Mail: General Services Administration, Regulatory Secretariat (VIR), 1800 F Street, NW., Room 4035, ATTN: Laurieann Duarte, Washington, DC 20405.

Instructions: Please submit comments only and cite FAR case 2006–007 in all correspondence related to this case. All comments received will be posted without change to *http://www.regulations.gov*, including any personal and/or business confidential information provided.

FOR FURTHER INFORMATION CONTACT: Mr. Ernest Woodson, Procurement Analyst, at (202) 501–3775 for clarification of content. For information pertaining to status or publication schedules, contact the FAR Secretariat at (202) 501–4755. Please cite FAR case 2006–007.

SUPPLEMENTARY INFORMATION: The Councils published a proposed rule in the **Federal Register** at 72 FR 7588, February 16, 2007. To allow additional time for interested parties to review the proposed FAR changes, the comment period is extended for an additional 30–days.

Dated: April 17, 2007

Al Matera,

Acting Director,Acquisition Policy Division.

[FR Doc. 07–1985 Filed 4–20–07; 8:45 am]

BILLING CODE 6820–EP–S

DEPARTMENT OF DEFENSE

GENERAL SERVICES ADMINISTRATION

NATIONAL AERONAUTICS AND SPACE ADMINISTRATION

48 CFR Parts 2, 4, 12, 14, 15, 16, 19, 27, 30, 31, 32, 42, 44, 49, and 52

[FAR Case 2005–036; Docket 2007-001, Sequence 7]

RIN: 9000–AK74

Federal Acquisition Regulation; FAR Case 2005–036, Definition of Cost or Pricing Data

AGENCIES: Department of Defense (DoD), General Services Administration (GSA), and National Aeronautics and Space Administration (NASA).

ACTION: Proposed rule.

SUMMARY: The Civilian Agency Acquisition Council and the Defense Acquisition Regulations Council (Councils) are proposing to amend the Federal Acquisition Regulation (FAR) to revise the definition of ''cost or pricing data''; change the term ''information other than cost or pricing data'' to ''data other than certified cost or pricing data''; add a definition of ''certified cost or pricing data'' to make the terms and definitions consistent with 10 U.S.C. 2306a and 41 U.S.C. 254b and more understandable to the general reader; change terminology throughout the FAR; and clarify the need to obtain data other than certified cost or pricing data when there is no other means to determine fair and reasonable pricing during price analysis.

DATES: Interested parties should submit written comments to the FAR Secretariat on or before June 22, 2007 to be considered in the formulation of a final rule.

ADDRESSES: Submit comments identified by FAR case 2005–036 by any of the following methods:

• Federal eRulemaking Portal: *http://www.regulations.gov*. Search for any document by first selecting the proper document types and selecting ''Federal Acquisition Regulation'' as the agency of choice. At the ''Keyword'' prompt, type in FAR Case number Case 2005–036 and click on the ''Submit'' button. Please include any personal and/or

business information inside the document. You may also search for any document by clicking on the ''Advanced search/document search'' tab at the top of the screen, selecting from the agency field ''Federal Acquisition Regulation'', and typing the FAR case number in the keyword field. Select the ''Submit'' button.

• Fax: 202–501–4067.

• Mail: General Services Administration, Regulatory Secretariat (VIR), 1800 F Street, NW, Room 4035, ATTN: Laurieann Duarte, Washington, DC 20405.

Instructions: Please submit comments only and cite FAR case 2005–036 in all correspondence related to this case. All comments received will be posted without change to *http://www.regulations.gov*, including any personal and/or business confidential information provided.

FOR FURTHER INFORMATION CONTACT: Patrick Conley at (202) 501–4770 for clarification of content. For information pertaining to status or publication schedules, contact the FAR Secretariat at (202) 501–4755. Please cite FAR case 2005–036.

SUPPLEMENTARY INFORMATION:

A. Background

The Defense Acquisition Regulatory Council and the Civilian Agency Acquisition Council (the Councils) reviewed FAR 15.4 for needed clarification based on several events and an initial Defense Acquisition Regulation Supplement (DFARS) Case (2004–D019) that identified confusion concerning when cost or pricing data can and should be obtained. Several events identified confusion over the difference between ''cost or pricing data'' and ''information other than cost or pricing data,'' the requirement to obtain ''information other than cost or pricing data,'' and the requirement to submit ''cost or pricing data'' in accordance with the instructions at Table 15–2 at FAR 15.408.

On May 30, 2001 the Department of Defense Inspector General (DoD IG) issued Report No. D2001–129 that identified a situation in which contracting officers did not obtain adequate pricing information or information other than cost or pricing data for justifying price reasonableness. As a result of the Inspector General report, in March 2002, the Director of Defense Procurement issued a memorandum, titled ''Price Analysis and Price Reasonableness Determinations When Cost or Pricing Data are not Obtained,'' to Defense agencies and military departments to reiterate the need to obtain sufficient pricing or cost data to justify that prices are fair and reasonable.

A Defense Acquisition University (DAU) study on the ''Tanker Lease Program: Acquisition Lessons Learned'' questioned the consistency of the definition and usage of the term ''cost or pricing data'' in the FAR, DFARS and the statute. The study indicated that clarification is needed to show that both terms are referring to the same information/data. The study pointed out that the statutory language indicates that the distinguishing characteristic of certified cost or pricing data is certification, and not the level of detail of the cost or pricing data.

In 2005, Congress expressed concern regarding an Air Force defective pricing case related to judgmental factors as cost or pricing data. Based on the legal issues raised in the case, Congress is concerned that FAR regulations are ambiguous, especially in the definition of cost or pricing data in FAR 2.101 and the discussion of cost or pricing data in Table 15–2.

In its supplemental report dated October 24, 2005 for DFARS Case 2004–D019, Commercial Item Acquisition, the DFARS Pricing Committee concluded that there appears to be a misunderstanding with the use of the terminology that is currently contained in the FAR and carried forward into the DFARS with regard to ''cost or pricing data'' and ''information other than cost or pricing data.'' The apparent misunderstanding leads to confusion over what information can be obtained under ''information other than cost or pricing data.'' The Councils believe that the terminology should be changed because they believe that it should be clear that the contracting officer should be free to ask for any information necessary to determine the price to be fair and reasonable. This could include any cost data or pricing data that would support price reasonableness even though certification is not required. The Councils believe it to be extremely important to resolve any misunderstanding amongst Government and contractor acquisition professionals by ensuring that the definition is fully clarified.

The Councils researched the information identified, met with the Air Force General Counsel to discuss its findings and concerns about the defective pricing cases, obtained input from field personnel, and researched the Truth In Negotiations Act (TINA). The DoD IG also made a presentation to the Councils about recent findings and concerns.

The Air Force General Counsel briefed the Councils on issues that arose during defective pricing cases related to the information that is required to be submitted by contractors, specifically related to Table 15–2 at FAR 15.408 and referenced at 52.215–20(b). They recommended that the Councils revise the clause to make it clear that the data in Table 15–2 are required to be submitted when TINA applies.

The DoD IG briefed the Councils on recent findings related to reviews of sole source commercial item pricing and specifically about confusion over the contracting officer's ability to obtain cost or pricing data (uncertified), sales information, and other data necessary to determine prices to be fair and reasonable. The DoD IG expressed a concern that current FAR language does not point out that 10 U.S.C. 2306a(d)(1) requires contracting officers to obtain ''*at a minimum, appropriate information on the prices at which the same item or similar items have previously been sold, adequate for determining the reasonableness of the price*.'' The DoD IG also suggested a need to have a separate section in the FAR for the pricing of sole source commercial items (not based on adequate price competition). The DoD IG believes that the wording in the clause at 52.215.20 for obtaining information other than cost or pricing data should be part of the terms and conditions for contracts awarded under Part 12. The DoD IG also stated that during its reviews it encountered confusion about the determination of price reasonableness for ''of a type'' commercial items and the process for obtaining sufficient information to determine that the prices for those items are fair and reasonable.

The Councils determined that the current definitions at FAR 2.101 for ''cost or pricing data'' and ''information other than cost or pricing data'' need to be revised to be consistent with the requirements at 10 U.S.C. 2306a and 41 U.S.C. 254b and should be better defined so it is clear that the underlying information is the same, but the requirement to certify that data distinguishes the TINA requirements. The Councils also concluded that FAR 15.4 needs to be revised to clarify the need and authority to obtain a detailed cost estimate, including cost or pricing data, when there is no other means to determine fair and reasonable pricing during price analysis even though the cost or pricing data will not be certified. As part of this clarification, the Councils revised the provisions at 52.215–20 and 52.215–21 to clarify the use of Table 15–2 at FAR 15.408. However, the Councils

did not find that there should be a separate section for pricing commercial sole source (non-competitive) items. With these clarifications, the Councils believe the hierarchy at 15.402 applies and clearly provides the contracting officer with the authority to obtain whatever data is necessary to determine whether the proposed prices are fair and reasonable, up to and including a detailed cost estimate and cost or pricing data (but excluding a certificate) - whether a sole source or other situation is involved.

The Councils decided to revise the definition of ''cost or pricing data'' to remove the sentence ''*Cost or pricing data are data requiring certification in accordance with 15.406–2,*'' as it makes the definition inconsistent with 10 U.S.C. 2306a and 41 U.S.C. 254b, and replace this with a definition of ''certified cost or pricing data.'' A definition of ''cost or pricing data'' that is consistent with 10 U.S.C. 2306a and 41 U.S.C. 254b is added.

The Councils also changed the term ''information other than cost or pricing data'' to ''data other than certified cost or pricing data'' to be consistent with 10 U.S.C. 2306a and 41 U.S.C. 254b. In addition, the Councils revised the definition to clarify that contracting officers are to obtain whatever information is necessary to determine that prices are fair and reasonable. This change clearly establishes that the underlying data can be the same (detailed cost estimates and cost or pricing data). The difference occurs when the pricing action meets the requirements at 10 U.S.C. 2306a(a)(1) and 41 U.S.C. 254b(a)(1); that data must be certified. Likewise, when the certification requirements at 10 U.S.C. 2306a(a)(2) and 41 U.S.C. 254b(a)(2) do not apply, the contracting officer can obtain the same information (detailed cost estimates and cost or pricing data) when there are no other means to determine prices fair and reasonable, but that data cannot be certified. The contracting officer may also obtain only specified portions of this information, depending on the contracting officer's needs. This clarification is especially important when purchasing noncompetitive commercial items.

The Councils added a definition for ''certified cost or pricing data'' to clarify the distinction that certified cost or pricing data is a two-step process consisting of (1) the offeror/contractor submitting cost or pricing data, and (2) the offeror/contractor providing a certificate of current cost or pricing data at a certain date prior to agreement on price. This term also distinguishes that, when exceptions apply, it is only the certificate that shall not be required, consistent with 10 U.S.C. 2306a(b) and 41 U.S.C. 254b(b). This is further clarified in 10 U.S.C. 2306(d) and 41 U.S.C. 254b, which require that contracting officers obtain data ''...other than CERTIFIED cost or pricing data to the extent necessary to determine the reasonableness of the price...'' (emphasis added).

To bring the FAR into closer compliance with 10 U.S.C. 2306a(d)(1) and 41 U.S.C. 254b(d)(1), the Councils also added the following language in 15.403–3(c):

> Unless an exception under 15.403–1(b)(1) or (2) applies, the contracting officer must require that the information submitted by the offeror include, at a minimum, appropriate information on the prices at which the same item or similar items have previously been sold, adequate for determining the reasonableness of the price.

Other clarifying changes for obtaining certified cost or pricing data or data other than certified cost or pricing data are contained in the proposed FAR changes. These changes clarify that contracting officers must require the submission of whatever information is necessary to document a valid basis for determining prices to be fair and reasonable, using the hierarchy at FAR 15.402, without requesting anymore information than is necessary to adequately document the determination.

The Councils considered revising the terms to: ''certified cost or pricing data'' and ''non-certified pricing and cost data.'' However, the Councils determined that the terms need to be consistent with 10 U.S.C. 2306a and 41 U.S.C. 254b. Most importantly though, if the FAR authorized the contracting officer only to obtain ''noncertified cost or pricing data'' when a certificate is not required, the FAR would not contain authority to obtain detailed cost estimates plus the noncertified cost or pricing data; it would only contain authority to obtain ''cost or pricing'' that is not certified. The distinction between detailed cost estimates and ''cost or pricing data'' is that ''cost or pricing data'' are defined in TINA, and they are limited to a subset of the information that Table 15–2 requires. The 10 U.S.C. 2306a(h)(1) definition of cost or pricing data states ''the term does not include information that is judgmental, but does include the factual information from which a judgment was derived.'' Therefore, if a contracting officer needs a complete cost estimate and supporting judgments, the contracting officer needs more than just the noncertified cost or pricing data.

The proposed changes are expected to resolve confusion and to provide contracting officers and contractors the necessary clarification that the contracting officer has the authority (and requirement) to request, obtain, and evaluate whatever pricing or cost information is needed to make a determination that prices are fair and reasonable - using the hierarchy at FAR 15.402.

This is not a significant regulatory action and, therefore, was not subject to review under Section 6(b) of Executive Order 12866, Regulatory Planning and Review, dated September 30, 1993. This rule is not a major rule under 5 U.S.C. 804.

B. Regulatory Flexibility Act

The Councils do not expect this proposed rule to have a significant economic impact on a substantial number of small entities within the meaning of the Regulatory Flexibility Act, 5 U.S.C. 601, *et seq.*, because this proposed rule is clarifying existing statutory and regulatory authorities. It is not establishing new authorities or procedures. An Initial Regulatory Flexibility Analysis has, therefore, not been performed. We invite comments from small businesses and other interested parties. The Councils will consider comments from small entities concerning the affected FAR Part 2, 4, 12, 14, 15, 16, 19, 27, 30, 31, 32, 42, 44, 49, and 52 in accordance with 5 U.S.C. 610. Interested parties must submit such comments separately and should cite 5 U.S.C. 601, *et seq.* (FAR case 2005–036), in correspondence.

C. Paperwork Reduction Act

The Paperwork Reduction Act does not apply because the proposed changes to the FAR do not impose additional information collection requirements to the paperwork burden previously approved under OMB Control Number 9000–0013.

List of Subjects in 48 CFR Parts 2, 4, 12, 14, 15, 16, 19, 27, 30, 31, 32, 42, 44, 49, and 52

Government procurement.

Dated: April 12, 2007.

Al Matera,

Acting Director, Contract Policy Division.

Therefore, DoD, GSA, and NASA propose amending 48 CFR parts 2, 4, 12, 14, 15, 16, 19, 27, 30, 31, 32, 42, 44, 49, and 52 as set forth below:

1. The authority citation for 48 CFR parts 2, 4, 12, 14, 15, 16, 19, 27, 30, 31, 32, 42, 44, 49, and 52 continues to read as follows:

Authority: 40 U.S.C. 121(c); 10 U.S.C. chapter 137; and 42 U.S.C. 2473(c).

PART 2—DEFINITIONS OF WORDS AND TERMS

2. Amend section 2.101 in paragraph (b)(2) by—

a. Adding, in alphabetical order, the definition ''Certified cost or pricing data'';

b. Revising the introductory text of the definition ''Cost or pricing data'';

c. Adding, in alphabetical order, the definition ''Data other than certified cost or pricing data''; and

d. Removing the definition ''Information other than cost or pricing data''.

The added and revised text reads as follows:

2.101 Definitions.

* * * * *

(b) * * *

(2) * * *

Certified cost or pricing data means ''cost or pricing data'' that has been required to be submitted and has been certified, or is required to be certified, in accordance with 15.406–2. This certification states that, to the best of the person's knowledge and belief, the cost or pricing data is accurate, complete, and current as of a date certain before contract award. Cost or pricing data is required to be certified in certain procurements (10 U.S.C. 2306a and 41 U.S.C. 254b). See FAR 15.403–4.

* * * * *

Cost or pricing data (10 U.S.C. 2306a(h)(1) and 41 U.S.C. 254b) means all facts that, as of the date of price agreement, or, if applicable, an earlier date agreed upon between the parties that is as close as practicable to the date of agreement on price, prudent buyers and sellers would reasonably expect to affect price negotiations significantly. Cost or pricing data are factual, not judgmental; and are verifiable. While they do not indicate the accuracy of the prospective contractor's judgment about estimated future costs or projections, they do include the data forming the basis for that judgment. Cost or pricing data are more than historical accounting data; they are all the facts that can be reasonably expected to contribute to the soundness of estimates of future costs and to the validity of determinations of costs already incurred. They also include, but are not limited to, such factors as—

* * * * *

Data other than certified cost or pricing data means any data, including cost or pricing data and judgmental information necessary for the contracting officer to determine a fair and reasonable price or cost realism, where certification is not required in accordance with 15.406–2. For example, such data may include pricing, sales, or cost data, and includes cost or pricing data for which certification is determined inapplicable after submission.

* * * * *

PART 4—ADMINISTRATIVE MATTERS

4.704 [Amended]

3. Amend section 4.704 in paragraph (b) by removing ''for cost'' and adding ''for certified cost'' in its place.

4. Amend section 4.803 by revising paragraphs (a)(17) and (b)(4) to read as follows:

4.803 Contents of contract files.

* * * * *

(a) * * *

(17) Data and information related to the Contracting Officer's determination of a fair and reasonable price. This may include—

(i) Cost or pricing data;

(ii) Data other than certified cost or pricing data;

(iii) Certified cost or pricing data;

(iv) Justification for waiver from the requirement to submit certified cost or pricing data; or

(v) Certificates of Current Cost or Pricing Data.

* * * * *

(b) * * *

(4) Certified cost or pricing data, Certificates of Current Cost or Pricing Data, or data other than certified cost or pricing data; cost or price analysis; and other documentation supporting contractual actions executed by the contract administration office.

* * * * *

PART 12—ACQUISITON OF COMMERCIAL ITEMS

12.102 [Amended]

5. Amend section 12.102 in paragraph (f)(2)(ii) by removing ''Cost or pricing'' and adding ''Certified cost or pricing'' in its place.

12.504 [Amended]

6. Amend section 12.504 in paragraph (a)(7) by removing ''provide cost'' and adding ''provide certified cost'' in its place.

PART 14—SEALED BIDDING

7. Amend section 14.201–7 by removing from paragraph (a) ''of cost'' and adding ''of certified cost'' in its place; and by revising paragraphs (b)(1) and (c)(1) to read as follows:

14.201–7 Contract clauses.

* * * * *

(b) * * *

(1) When contracting by sealed bidding, the contracting officer shall insert the clause at 52.214–27, Price Reduction for Defective Certified Cost or Pricing Data—Modifications—Sealed Bidding, in solicitations and contracts if the contract amount is expected to exceed the threshold for submission of certified cost or pricing data at 15.403–4(a)(1).

* * * * *

(c) * * *

(1) When contracting by sealed bidding, the contracting officer shall insert the clause at 52.214–28, Subcontractor Certified Cost or Pricing Data—Modifications—Sealed Bidding, in solicitations and contracts if the contract amount is expected to exceed the threshold for submission of certified cost or pricing data at 15.403–4(a)(1).

* * * * *

PART 15—CONTRACTING BY NEGOTIATION

8. Amend section 15.204–5 by revising paragraph (b)(5) to read as follows:

15.204–5 Part IV—Representations and Instructions.

* * * * *

(b) * * *

(5) Certified cost or pricing data (see Table 15–2 of 15.408) or data other than certified cost or pricing data.

* * * * *

9. Amend section 15.402 by revising the introductory text and paragraph (a) to read as follows:

15.402 Pricing policy.

Contracting officers shall—

(a) Purchase supplies and services from responsible sources at fair and reasonable prices. In establishing the reasonableness of the offered prices, the contracting officer shall not obtain more data or information than is necessary. The contracting officer shall generally use the following order of preference in determining the type of data required:

(1) No additional data from the offeror, if the price is based on adequate price competition, except as provided by 15.403–3(b).

(2) Data other than certified cost or pricing data:

(i) Data related to prices (*e.g.*, established catalog or market prices, sales, or previous contract prices), relying first on data available within the Government; second, on data obtained from sources other than the offeror; and, if necessary, on data obtained from the offeror. When obtaining data from the offeror is necessary, unless an exception

under 15.403–1(b)(1) or (2) applies, such data submitted by the offeror shall include, at a minimum, appropriate data on the prices at which the same or similar items have been sold previously, adequate for evaluating the reasonableness of the price.

(ii) Cost data necessary for the contracting officer to determine a fair and reasonable price.

(3) *Certified cost or pricing data.* When required by 15.403–4.

* * * * *

10. Amend section 15.403 by revising the section heading to read as follows:

15.403 Obtaining certified cost or pricing data.

* * * * *

11. Amend section 15.403–1 by—

a. Revising the section heading, paragraph (a), the introductory text of paragraphs (b) and (c), and paragraph (c)(3)(i);

b. Removing from paragraphs (c)(3)(ii)(A), (B), and (C) ''of cost'' and adding ''of certified cost'' in its place;

c. Removing from paragraph (c)(3)(iii) ''for cost'' and adding ''for certified cost'' in its place; and

d. Revising the introductory text of paragraph (c)(4).

The revised text reads as follows:

15.403–1 Prohibition on obtaining certified cost or pricing data (10 U.S.C. 2306a and 41 U.S.C. 254b).

(a) Certified cost or pricing data shall not be obtained for acquisitions at or below the simplified acquisition threshold.

(b) *Exceptions to certified cost or pricing data requirements.* The contracting officer shall not require certified cost or pricing data to support any action (contracts, subcontracts, or modifications) (but may require data other than certified cost or pricing data as defined in FAR 2.101 to support a determination of a fair and reasonable price or cost realism)—

* * * * *

(c) *Standards for exceptions from certified cost or pricing data requirements*—

* * * * *

(3) * * *

(i) Any acquisition of an item that meets the commercial item definition in 2.101, or any modification, as defined in paragraph (3)(i) of that definition, that does not change the item from a commercial item to a noncommercial item, is exempt from the requirement for certified cost or pricing data. If the contracting officer determines that an item claimed to be commercial is, in fact, not commercial and that no other exception or waiver applies, the contracting officer shall require submission of certified cost or pricing data.

* * * * *

(4) *Waivers.* The head of the contracting activity (HCA) may, without power of delegation, waive the requirement for submission of certified cost or pricing data in exceptional cases. The authorization for the waiver and the supporting rationale shall be in writing. The HCA may consider waiving the requirement if the price can be determined to be fair and reasonable without submission of certified cost or pricing data. For example, if certified cost or pricing data were furnished on previous production buys and the contracting officer determines such data are sufficient, when combined with updated data, a waiver may be granted. If the HCA has waived the requirement for submission of certified cost or pricing data, the contractor or higher-tier subcontractor to whom the waiver relates shall be considered as having been required to provide certified cost or pricing data. Consequently, award of any lower-tier subcontract expected to exceed the certified cost or pricing data threshold requires the submission of certified cost or pricing data unless—

* * * * *

12. Revise section 15.403–2 to read as follows:

15.403–2 Other circumstances where certified cost or pricing data are not required.

(a) The exercise of an option at the price established at contract award or initial negotiation does not require submission of certified cost or pricing data.

(b) Certified cost or pricing data are not required for proposals used solely for overrun funding or interim billing price adjustments.

13. Revise section 15.403–3 to read as follows:

15.403–3 Requiring data other than certified cost or pricing data.

(a)(1) In those acquisition situations that do not require certified cost or pricing data, the contracting officer shall—

(i) Obtain whatever data is available from Government or other secondary sources and use that data in determining a fair and reasonable price.

(ii) If the contracting officer cannot obtain adequate data from sources other than the offeror, the contracting officer shall require submission of data other than certified cost or pricing data, as defined in 2.101, from the offeror that is adequate to determine a fair and reasonable price (10 U.S.C. 2306a(d)(1) and 41 U.S.C. 254b(d)(1)). This includes data from an offeror to support a cost realism analysis.

(iii) In situations where there is not adequate price competition, the contracting officer shall consider whether cost data are necessary to determine a fair and reasonable price.

(iv) Unless an exception under 15.403–1(b)(1) or (2) applies, the contracting officer shall require that the data submitted by the offeror include, at a minimum, appropriate data on the prices at which the same item or similar items have previously been sold, adequate for determining the reasonableness of the price.

(v) To determine the data an offeror shall be required to submit, the contracting officer shall consider the guidance in Section 3.3, Chapter 3, Volume I, of the Contract Pricing Reference Guide cited at 15.404–1(a)(7).

(2) The contractor's format for submitting the data should be used (see 15.403–5(b)(2)).

(3) The contracting officer shall ensure that data used to support price negotiations is sufficiently current to permit negotiation of a fair and reasonable price. Requests for updated offeror data should be limited to data that affects the adequacy of the proposal for negotiations, such as changes in price lists.

(4) As specified in Section 808 of Public Law 105–261, an offeror who does not comply with a requirement to submit data for a contract or subcontract in accordance with paragraph (a)(1) of this section is ineligible for award unless the HCA determines that it is in the best interest of the Government to make the award to that offeror, based on consideration of the following:

(i) The effort made to obtain the data.

(ii) The need for the item or service.

(iii) Increased cost or significant harm to the Government if award is not made.

(b) *Adequate price competition.* When adequate price competition exists (see 15.403–1(c)(1)), generally no additional data is necessary to determine the reasonableness of price. However, if there are unusual circumstances where it is concluded that additional data is necessary to determine the reasonableness of price, the contracting officer shall, to the maximum extent practicable, obtain the additional data from sources other than the offeror. In addition, the contracting officer should, request data to determine the cost realism of competing offers or to evaluate competing approaches.

(c) *Commercial items.* (1) At a minimum, the contracting officer must use price analysis to determine whether the price is fair and reasonable

whenever the contracting officer acquires a commercial item (see 15.404–1(b)). The fact that a price is included in a catalog does not, in and of itself, make it fair and reasonable. If the contracting officer cannot determine whether an offered price is fair and reasonable, even after obtaining additional data from sources other than the offeror, then the contracting officer shall require the offeror to submit data other than certified cost or pricing data to support further analysis (see 15.404–1). This data may include sales history, cost data, or any other information the contracting officer requires to determine the price is fair and reasonable. Unless an exception under 15.403–1(b)(1) or (2) applies, the contracting officer shall require that the data submitted by the offeror include, at a minimum, appropriate data on the prices at which the same item or similar items have previously been sold, adequate for determining the reasonableness of the price.

(2) *Limitations relating to commercial items (10 U.S.C. 2306a(d)(2) and 41 U.S.C. 254b(d))*.

(i) The contracting officer shall limit requests for sales data relating to commercial items to data for the same or similar items during a relevant time period.

(ii) The contracting officer shall, to the maximum extent practicable, limit the scope of the request for data relating to commercial items to include only data that is in the form regularly maintained by the offeror as part of its commercial operations.

(iii) The Government shall not disclose outside the Government data obtained relating to commercial items that is exempt from disclosure under 24.202(a) or the Freedom of Information Act (5 U.S.C. 552(b)).

14. Amend section 15.403–4 by revising the section heading, the introductory text of paragraphs (a)(1), (a)(1)(iii), and (b) and paragraphs (a)(1)(ii), (a)(2), (b)(1), and (c) to read as follows:

15.403–4 Requiring certified cost or pricing data (10 U.S.C. 2306a and 41 U.S.C. 254b).

(a)(1) The contracting officer shall obtain certified cost or pricing data only if the contracting officer concludes that none of the exceptions in 15.403–1(b) applies. However, if the contracting officer has reason to believe exceptional circumstances exist and has sufficient data available to determine a fair and reasonable price, then the contracting officer should consider requesting a waiver under the exception at 15.403–1(b)(4). The threshold for obtaining certified cost or pricing data is $650,000. Unless an exception applies, certified cost or pricing data are required before accomplishing any of the following actions expected to exceed the current threshold or, for existing contracts, the threshold specified in the contract:

* * * * *

(ii) The award of a subcontract at any tier, if the contractor and each higher-tier subcontractor were required to submit certified cost or pricing data (but see waivers at 15.403–1(c)(4)).

(iii) The modification of any sealed bid or negotiated contract (whether or not certified cost or pricing data were initially required) or any subcontract covered by paragraph (a)(1)(ii) of this subsection. Price adjustment amounts must consider both increases and decreases (*e.g.*, a $200,000 modification resulting from a reduction of $500,000 and an increase of $300,000 is a pricing adjustment exceeding $650,000). This requirement does not apply when unrelated and separately priced changes for which certified cost or pricing data would not otherwise be required are included for administrative convenience in the same modification. Negotiated final pricing actions (such as termination settlements and total final price agreements for fixed-price incentive and redeterminable contracts) are contract modifications requiring certified cost or pricing data if—

* * * * *

(2) Unless prohibited because an exception at 15.403–1(b) applies, the head of the contracting activity, without power of delegation, may authorize the contracting officer to obtain certified cost or pricing data for pricing actions below the pertinent threshold in paragraph (a)(1) of this section, provided the action exceeds the simplified acquisition threshold. The head of the contracting activity shall justify the requirement for certified cost or pricing data. The documentation shall include a written finding that certified cost or pricing data are necessary to determine whether the price is fair and reasonable and the facts supporting that finding.

(b) When certified cost or pricing data are required, the contracting officer shall require the contractor or prospective contractor to submit to the contracting officer (and to have any subcontractor or prospective subcontractor submit to the prime contractor or appropriate subcontractor tier) the following in support of any proposal:

(1) The certified cost or pricing data and data other than certified cost or pricing data.

* * * * *

(c) If certified cost or pricing data are requested and submitted by an offeror, but an exception is later found to apply, the data must not be considered certified cost or pricing data as defined in 2.101 and must not be certified in accordance with 15.406–2.

* * * * *

15. Amend section 15.403–5 by revising the section heading, paragraphs (a)(1), (a)(2), (a)(3), (b)(1), and (b)(2) to read as follows:

15.403–5 Instructions for submission of certified cost or pricing data and data other than certified cost or pricing data.

(a) * * *

(1) Whether certified cost or pricing data are required;

(2) That, in lieu of submitting certified cost or pricing data, the offeror may submit a request for exception from the requirement to submit certified cost or pricing data;

(3) Any data other than certified cost or pricing data that is required; and

* * * * *

(b) * * *

(1) Unless required to be submitted on one of the termination forms specified in Subpart 49.6, the contracting officer may require submission of certified cost or pricing data in the format indicated in Table 15–2 of 15.408, specify an alternative format, or permit submission in the contractor's format.

(2) Data other than certified cost or pricing data may be submitted in the offeror's own format unless the contracting officer decides that use of a specific format is essential for evaluating and determining the price is fair and reasonable and the format has been described in the solicitation.

* * * * *

16. Amend section 15.404–1 by:

a. Removing from paragraphs (a)(2) and (a)(3) ''when cost'' and adding ''when certified cost'' in its place;

b. Revising paragraph (a)(4) and the second sentence of paragraph (a)(6);

c. Revising the heading of paragraph (b);

d. Adding three sentences to the end of paragraph (b)(1);

e. Revising the second sentence of paragraph (b)(2)(i), and paragraphs (b)(2)(ii) and (b)(2)(vii);

f. Revising paragraph (c)(1);

g. Removing from paragraph (e)(1) ''may'' and adding ''should'' in its place;

h. Adding paragraph (e)(3); and

i. Removing from the third sentence of paragraph (f)(2) ''may'' and adding ''should'' in its place.

The revised and added text reads as follows:

15.404–1 Proposal analysis techniques.

(a) * * *

(4) Cost analysis may also be used to evaluate data other than certified cost or pricing data to determine cost reasonableness or cost realism when a fair and reasonable price cannot be determined through price analysis alone for commercial or non-commercial items.

* * * * *

(6) * * * Any discrepancy or mistake of fact (such as duplications, omissions, and errors in computation) contained in the certified cost or pricing data or data other than certified cost or pricing data submitted in support of a proposal shall be brought to the contracting officer's attention for appropriate action.

* * * * *

(b) *Price analysis for commercial and non-commercial items.* (1) * * * Unless an exception under 15.403–1(b)(1) or (2) applies, at a minimum, the contracting officer shall obtain appropriate data on the prices at which the same item or similar items have previously been sold and determine if the data is adequate for evaluating the reasonableness of the price. Price analysis may include evaluating data other than certified cost or pricing data obtained from the offeror or contractor when there is no other means for determining a fair and reasonable price - see paragraph (c) of this section. Contracting officers shall obtain price or cost data from the offeror or contractor if that is the only means to determine the price to be fair and reasonable—including commercial item price analysis.

(2) * * *

(i) * * * Normally, adequate price competition establishes a fair and reasonable price (see 15.403–1(c)(1)).

(ii) Comparison of proposed prices to prior Government buys and sales prices to other than the Government of the same or similar items, including commercial items that are ''of a type'' or requiring minor modifications, or other available data;

(A) The prior price must be a valid basis for comparison. If there has been a significant time lapse between the last acquisition and the present one or if the terms and conditions of the acquisition are significantly different, or if the reasonableness of the prior price is uncertain, then the prior price may not be a valid basis for comparison.

(B) The prior price must be adjusted to account for differing terms and conditions, quantities and market and economic factors. For similar items, the contracting officer must also adjust the prior price to account for the differences between the similar item and the item being procured.

(C) Expert technical advice should be obtained when analyzing similar items or commercial items that are ''of a type'' or requiring minor modifications to ascertain the magnitude of changes required and to assist in pricing the required changes.

* * * * *

(vii) Analysis of data other than certified cost or pricing data (as defined at 2.101) provided by the offeror.

* * * * *

(c) * * *

(1) Cost analysis is the review and evaluation of the separate cost elements and profit or fee in an offeror's or contractor's proposal (including certified cost or pricing data and data other than certified cost or pricing data, which are defined at 2.101, needed to determine a fair and reasonable price or cost realism), and the application of judgment to determine how well the proposed costs represent what the cost of the contract should be, assuming reasonable economy and efficiency.

* * * * *

(e) * * *

(3) The contracting officer should request technical assistance in evaluating pricing related to items that are ''similar to'' items being purchased or commercial items that are ''of a type'' or requiring minor modifications to ascertain the magnitude of changes required and to assist in pricing the required changes.

* * * * *

17. Amend section 15.404–2 by—

a. Revising the section heading;

b. Removing from the second sentence of paragraph (a)(1) and the first sentence of the introductory text of paragraph (a)(2) ''must'' and adding ''shall'' in its place; and

c. Revising the introductory text of paragraph (a)(2)(iii) and paragraph (a)(2)(iii)(F).

The revised text reads as follows:

15.404–2 Data to support proposal analysis.

(a) * * *

(2) * * *

(iii) Information to help contracting officers determine commerciality and a fair and reasonable price, including—

* * * * *

(F) Identifying general market conditions affecting determinations of commerciality and a fair and reasonable price.

* * * * *

18. Amend section 15.404–3 by—

a. Revising paragraphs (a) and (b)(3);

b. Revising the introductory text of paragraph (c);

c. Removing from the introductory text of paragraph (c)(1) ''subcontractor(s), cost'' and adding ''subcontractor(s), certified cost'' in its place;

d. Removing from paragraph (c)(1)(ii) ''pertinent cost'' and adding ''pertinent certified cost'' in its place;

e. Revising paragraph (c)(2);

f. Removing from paragraph (c)(3) and the first sentence of paragraph (c)(4) ''Subcontractor cost'' and adding ''Subcontractor certified cost'' in its place;

g. Removing from paragraph (c)(5) ''Government cost'' and adding ''Government certified cost'' in its place.

The revised text reads as follows:

15.404–3 Subcontract pricing considerations.

(a) The contracting officer is responsible for the determination of a fair and reasonable price for the prime contract, including subcontracting costs. The contracting officer should consider whether a contractor or subcontractor has an approved purchasing system, has performed cost or price analysis of proposed subcontractor prices, or has negotiated the subcontract prices before negotiation of the prime contract, in determining the reasonableness of the prime contract price. This does not relieve the contracting officer from the responsibility to analyze the contractor's submission, including subcontractor's certified cost or pricing data.

(b) * * *

(3) When required by paragraph (c) of this section, submit subcontractor certified cost or pricing data to the Government as part of its own certified cost or pricing data.

(c) Any contractor or subcontractor that is required to submit certified cost or pricing data also shall obtain and analyze certified cost or pricing data before awarding any subcontract, purchase order, or modification expected to exceed the certified cost or pricing data threshold, unless an exception in 15.403–1(b) applies to that action.

* * * * *

(2) The contracting officer should require the contractor or subcontractor to submit to the Government (or cause submission of) subcontractor certified cost or pricing data below the thresholds in paragraph (c)(1) of this section and data other than certified cost or pricing data that the contracting officer considers necessary for adequately pricing the prime contract.

* * * * *

19. Amend section 15.406–2 by—

a. Revising the introductory text of paragraph (a);

b. Removing from the second sentence of the certificate in paragraph (a) ''the cost'' and adding ''the certified cost'' in its place;

c. Revising paragraph (e).

The revised text reads as follows:

15.406–2 Certificate of Current Cost or Pricing Data.

(a) When certified cost or pricing data are required, the contracting officer shall require the contractor to execute a Certificate of Current Cost or Pricing Data, using the format in this paragraph, and must include the executed certificate in the contract file.

* * * * *

(e) If certified cost or pricing data are requested by the Government and submitted by an offeror, but an exception is later found to apply, the data shall not be considered certified cost or pricing data and shall not be certified in accordance with this subsection.

20. Amend section 15.406–3 by revising paragraphs (a)(5) and (a)(6), and the second and third sentences of paragraph (a)(7) to read as follows:

15.406–3 Documenting the negotiation.

(a) * * *

(5) If certified cost or pricing data were not required in the case of any price negotiation exceeding the certified cost or pricing data threshold, the exception used and the basis for it.

(6) If certified cost or pricing data were required, the extent to which the contracting officer—

(i) Relied on the certified cost or pricing data submitted and used them in negotiating the price;

(ii) Recognized as inaccurate, incomplete, or noncurrent any certified cost or pricing data submitted; the action taken by the contracting officer and the contractor as a result; and the effect of the defective data on the price negotiated; or

(iii) Determined that an exception applied after the data were submitted and, therefore, considered not to be certified cost or pricing data.

(7) * * * Where the determination of a fair and reasonable price is based on cost analysis, the summary shall address each major cost element. When determination of a fair and reasonable price is based on price analysis, the summary shall include the source and type of data used to support the determination.

* * * * *

21. Amend section 15.407–1 by—

a. Revising the section heading;

b. Removing from the first sentence of paragraph (a) ''any cost'' and adding ''any certified cost'' in its place;

c. Revising paragraph (b)(1);

d. Removing from paragraphs (b)(2) and (b)(3)(ii) ''the cost'' and adding ''the certified cost'' in its place;

e. Revising paragraph (b)(3)(iv);

f. Removing from paragraph (b)(4) ''understated cost'' and adding ''understated certified cost'' in its place;

g. Removing from the first sentence of paragraph (b)(5)(ii) ''the cost'' and adding ''the certified cost'' in its place;

h. Removing from the first sentence of paragraph (b)(7)(iii) ''defective cost'' and adding ''defective certified cost'' in its place;

i. Removing from the first sentence of paragraph (e) ''Defective Cost'' each time it appears (twice) and adding ''Defective Certified Cost'' in its place;

j. Removing from the first sentence of the introductory text of paragraph (f) ''subcontractor cost'' and adding ''subcontractor certified cost'' in its place;

k. Removing from the first sentence of paragraph (f)(2) ''subcontractor cost'' and adding ''subcontractor certified cost'' in its place.

The revised text reads as follows:

15.407–1 Defective certified cost or pricing data.

* * * * *

(b) * * *

(1) If, after award, certified cost or pricing data are found to be inaccurate, incomplete, or noncurrent as of the date of final agreement on price or an earlier date agreed upon by the parties given on the contractor's or subcontractor's Certificate of Current Cost or Pricing Data, the Government is entitled to a price adjustment, including profit or fee, of any significant amount by which the price was increased because of the defective data. This entitlement is ensured by including in the contract one of the clauses prescribed in 15.408 (b) and (c) and is set forth in the clauses at 52.215–10, Price Reduction for Defective Certified Cost or Pricing Data, and 52.215–11, Price Reduction for Defective Certified Cost or Pricing Data—Modifications. The clauses give the Government the right to a price adjustment for defects in certified cost or pricing data submitted by the contractor, a prospective subcontractor, or an actual subcontractor.

* * * * *

(3) * * *

(iv) Certified cost or pricing data were required; however, the contractor or subcontractor did not submit a Certificate of Current Cost or Pricing Data relating to the contract.

* * * * *

15.407–2 [Amended]

22. Amend section 15.407–2 in paragraph (c)(1) by removing ''requiring cost'' and adding ''requiring certified cost'' in its place.

23. Amend section 15.407–3 by revising the first sentence of paragraph (a) to read as follows:

15.407–3 Forward pricing rate agreements.

(a) When certified cost or pricing data are required, offerors are required to describe any forward pricing rate agreements (FPRA's) in each specific pricing proposal to which the rates apply and to identify the latest certified cost or pricing data already submitted in accordance with the agreement. * * *

* * * * *

24. Amend section 15.408 by—

a. Revising paragraphs (b), (c), (d), and (e);

b. Removing from paragraphs (g), (j), and (k) ''that cost'' and adding ''that certified cost'' in its place;

c. Revising the introductory text of paragraph (l), (l)(1), (l)(4), and (m); and

d. In Table 15–2, which follows paragraph (m)(3), by—

1. Revising the table title, the introductory text, and Notes 1 and 2;

2. Revising the first sentence of paragraph B. and the introductory text of paragraph C. of the *General Instructions*; and

3. Revising the introductory text of paragraph A. and paragraph A.(2) of the *Cost Elements*.

The revised text reads as follows:

15.408 Solicitation provisions and contract clauses.

* * * * *

(b) *Price Reduction for Defective Certified Cost or Pricing Data*. The contracting officer shall, when contracting by negotiation, insert the clause at 52.215–10, Price Reduction for Defective Certified Cost or Pricing Data, in solicitations and contracts when it is contemplated that certified cost or pricing data will be required from the contractor or any subcontractor (see 15.403–4).

(c) *Price Reduction for Defective Certified Cost or Pricing Data—Modifications*. The contracting officer shall, when contracting by negotiation, insert the clause at 52.215–11, Price Reduction for Defective Certified Cost or Pricing Data—Modifications, in solicitations and contracts when it is contemplated that certified cost or pricing data will be required from the contractor or any subcontractor (see

15.403–4) for the pricing of contract modifications, and the clause prescribed in paragraph (b) of this section has not been included.

(d) *Subcontractor Certified Cost or Pricing Data*. The contracting officer shall insert the clause at 52.215–12, Subcontractor Certified Cost or Pricing Data, in solicitations and contracts when the clause prescribed in paragraph (b) of this section is included.

(e) *Subcontractor Certified Cost or Pricing Data—Modifications*. The contracting officer shall insert the clause at 52.215–13, Subcontractor Certified Cost or Pricing Data—Modifications, in solicitations and contracts when the clause prescribed in paragraph (c) of this section is included.

* * * * *

(l) *Requirements for Certified Cost or Pricing Data and Data Other Than Certified Cost or Pricing Data*. Considering the hierarchy at 15.402, the contracting officer shall insert the provision at 52.215–20, Requirements for Certified Cost or Pricing Data or Data Other Than Certified Cost and Pricing Data, in solicitations if it is reasonably certain that certified cost or pricing data or data other than certified cost or pricing data will be required. This provision also provides instructions to offerors on how to request an exception. The contracting officer shall—

(1) Use the provision with its Alternate I to specify a format for certified cost or pricing data or data other than certified cost or pricing data other than the format required by Table 15–2 of this section;

* * * * *

(4) Replace the basic provision with its Alternate IV if certified cost or pricing data are not expected to be required because an exception may apply, but data other than certified cost or pricing data is required as described in 15.403–3.

(m) *Requirements for Certified Cost or Pricing Data and Data Other Than Certified Cost or Pricing Data—Modifications*. Considering the hierarchy at 15.402, the contracting officer shall insert the clause at 52.215–21, Requirements for Certified Cost or Pricing Data or Data Other Than Certified Cost or Pricing Data—Modifications, in solicitations and contracts if it is reasonably certain that certified cost or pricing data or data other than certified cost or pricing data will be required for modifications. This clause also provides instructions to contractors on how to request an exception. The contracting officer shall—

(1) Use the clause with its Alternate II if copies of the proposal are to be sent to the ACO and contract auditor;

(2) Use the clause with its Alternate III if submission via electronic media is required; and

(3) Replace the basic clause with its Alternate IV if certified cost or pricing data are not expected to be required because an exception may apply, but data other than certified cost or pricing data is required as described in 15.403–3.

TABLE 15–2—INSTRUCTIONS FOR SUBMITTING COST/PRICE PROPOSALS WHEN CERTIFIED COST OR PRICING DATA ARE REQUIRED

This document provides instructions for preparing a contract pricing proposal when certified cost or pricing data are required.

Note 1: There is a clear distinction between submitting certified cost or pricing data and merely making available books, records, and other documents without identification. The requirement for submission of certified cost or pricing data is met when all accurate certified cost or pricing data reasonably available to the offeror have been submitted, either actually or by specific identification, to the Contracting Officer or an authorized representative. As later data comes into your possession, it should be submitted promptly to the Contracting Officer in a manner that clearly shows how the data relates to the offeror's price proposal. The requirement for submission of certified cost or pricing data continues up to the time of agreement on price, or an earlier date agreed upon between the parties if applicable.

Note 2: By submitting your proposal, you grant the Contracting Officer or an authorized representative the right to examine records that formed the basis for the pricing proposal. That examination can take place at any time before award. It may include those books, records, documents, and other types of factual data (regardless of form or whether the data is specifically referenced or included in the proposal as the basis for pricing) that will permit an adequate evaluation of the proposed price.

I. General Instructions

* * * * *

B. In submitting your proposal, you must include an index, appropriately referenced, of all the certified cost or pricing data and data other than certified cost or pricing data accompanying or identified in the proposal.

* * *

C. As part of the specific information required, you must submit, with your proposal, certified cost or pricing data (as defined at FAR 2.101). You must clearly identify on your cover sheet that certified cost or pricing data are included as part of the proposal. In addition, you must submit with your proposal any data other than certified cost or pricing data reasonably required to explain your estimating process, including—

* * * * *

II. Cost Elements

* * * * *

A. *Materials and services*. Provide a consolidated priced summary of individual material quantities included in the various tasks, orders, or contract line items being proposed and the basis for pricing (vendor quotes, invoice prices, etc.). Include raw materials, parts, components, assemblies, and services to be produced or performed by others. For all items proposed, identify the item and show the source, quantity, and price. Conduct price analyses of all subcontractor proposals. Conduct cost analyses for all subcontracts when certified cost or pricing data are submitted by the subcontractor. Include these analyses as part of your own certified cost or pricing data submissions for subcontracts expected to exceed the appropriate threshold in FAR 15.403–4. Submit the subcontractor certified cost or pricing data as part of your own certified cost or pricing data as required in paragraph IIA(2) of this table. These requirements also apply to all subcontractors if required to submit certified cost or pricing data.

* * * * *

(2) *All Other*. Obtain certified cost or pricing data and data other than certified cost or pricing data from prospective sources for those acquisitions (such as subcontracts, purchase orders, material order, etc.) exceeding the threshold set forth in FAR 15.403–4 and not otherwise exempt, in accordance with FAR 15.403–1(b) (i.e., adequate price competition, commercial items, prices set by law or regulation or waiver). Also provide data showing the basis for establishing source and reasonableness of price. In addition, provide a summary of your cost analysis and a copy of certified cost or pricing data and data other than certified cost or pricing data submitted by the prospective source in support of each subcontract, or purchase order that is the lower of either $11,500,000 or more, or both more than the pertinent certified cost or pricing data threshold and more than 10 percent of the prime contractor's proposed price. The Contracting Officer may require you to submit certified cost or pricing data and data other than certified cost or pricing data in support of proposals in lower amounts. Subcontractor certified cost or pricing data must be accurate, complete and current as of the date of final price agreement, or an earlier date agreed upon by the parties, given on the prime contractor's Certificate of Current Cost or Pricing Data. The prime contractor is responsible for updating a prospective subcontractor's data. For standard commercial items fabricated by the offeror that are generally stocked in inventory, provide a separate cost breakdown, if priced based on cost. For interorganizational transfers priced at cost, provide a separate breakdown of cost elements. Analyze the certified cost or pricing data and data other than certified cost or pricing data and submit the results of your analysis of the prospective source's proposal. When submission of a prospective source's certified cost or pricing data is required as described in this paragraph, it must be included as part of your own certified cost or pricing data. You must also submit any data other than certified cost or pricing data obtained from a

subcontractor, either actually or by specific identification, along with the results of any analysis performed on that data.

* * * * *

PART 16—TYPES OF CONTRACTS

16.202–2 [Amended]

25. Amend section 16.202–2 by removing from paragraph (b) ''valid cost'' and adding ''valid certified cost'' in its place.

26. Amend section 16.203–2 by revising paragraph (b) to read as follows:

16.203–2 Application.

* * * * *

(b) In contracts that do not require submission of certified cost or pricing data, the contracting officer shall obtain adequate data to establish the base level from which adjustment will be made and may require verification of data submitted.

27. Amend section 16.603–2 by revising the first sentence of paragraph (c) to read as follows:

16.603–2 Application.

* * * * *

(c) Each letter contract shall, as required by the clause at 52.216–25, Contract Definitization, contain a negotiated definitization schedule including (1) dates for submission of the contractor's price proposal, required certified cost or pricing data and data other than certified cost or pricing data, and, if required, make-or-buy and subcontracting plans, (2) a date for the start of negotiations, and (3) a target date for definitization, which shall be the earliest practicable date for definitization. * * *

* * * * *

28. Amend section 16.603–4 by revising the second sentence of paragraph (b)(3) to read as follows:

16.603–4 Contract clauses.

(b) * * *

(3) * * * If at the time of entering into the letter contract, the contracting officer knows that the definitive contract will be based on adequate price competition or will otherwise meet the criteria of 15.403–1 for not requiring submission of certified cost or pricing data, the words ''and certified cost or pricing data'' may be deleted from paragraph (a) of the clause. * * *

* * * * *

PART 19—SMALL BUSINESS PROGRAMS

29. Amend paragraph 19.705–4 by—

a. Removing from the introductory paragraph and paragraph (a) ''must'' and adding ''shall'' in its place; and

b. Revising paragraph (d)(3) to read as follows:

19.705–4 Reviewing the subcontracting plan.

* * * * *

(d) * * *

(3) Ensure that the subcontracting goals are consistent with the offeror's certified cost or pricing data or data other than certified cost or pricing data.

* * * * *

30. Amend section 19.806 by revising the second and third sentences of paragraph (a) to read as follows:

19.806 Pricing the 8(a) contract.

(a) * * * If required by Subpart 15.4, the SBA shall obtain certified cost or pricing data and data other than certified cost or pricing data from the 8(a) contractor. If the SBA requests audit assistance to determine proposed price to be fair and reasonable in a sole source acquisition, the contracting activity shall furnish it to the extent it is available.

* * * * *

PART 27—PATENTS, DATA, AND COPYRIGHTS

27.204–1 [Amended]

31. Amend section 27.204–1 in the first sentence of paragraph (b) by removing ''which cost'' and adding ''which certified cost'' in its place.

27.204–2 [Amended]

32. Amend section 27.204–2 in the first sentence by removing ''which cost'' and adding ''which certified cost'' in its place.

PART 30—COST ACCOUNTING STANDARDS ADMINISTRATION

30.201–5 [Amended]

33. Amend section 30.201–5 in paragraph (c)(6) by removing ''Whether cost'' and adding ''Whether certified cost'' in its place.

PART 31—CONTRACT COST PRINCIPLES AND PROCEDURES

31.205–6 [Amended]

34. Amend section 31.205–6 in paragraph (j)(3)(i)(B), the second sentence of paragraph (j)(3)(ii), and the second sentence of paragraph (o)(5) by removing ''which cost'' and adding ''which certified cost'' in its place.

PART 32—CONTRACT FINANCING

32.613 [Amended]

35. Amend section 32.613 in paragraph (h)(3) by removing ''Defective Cost'' and adding ''Defective Certified Cost'' in its place.

PART 42—CONTRACT ADMINISTRATION AND AUDIT SERVICES

42.705–1 [Amended]

36. Amend section 42.705–1 in paragraph (b)(5)(iii)(D) by removing ''of cost'' and adding ''of certified cost'' in its place.

37. Amend section 42.1304 by revising paragraph (d) to read as follows:

42.1304 Government delay of work.

* * * * *

(d) The contracting officer shall retain in the file a record of all negotiations leading to any adjustment made under the clause, and related certified cost or pricing data, or data other than certified cost or pricing data.

38. Amend section 42.1701 by—

a. Removing from the first sentence of paragraph (b) ''include cost'' and adding ''include certified cost'' in its place, and adding a new second sentence; and

b. Revising the second sentence of paragraph (c).

The added and revised text reads as follows:

42.1701 Procedures.

* * * * *

(b) * * * The ACO shall also obtain any necessary data other than certified cost or pricing data. * * *

(c) * * * The agreement shall provide for cancellation at the option of either party and shall require the contractor to submit to the ACO and to the cognizant contract auditor any significant change in certified cost or pricing data and data other than certified cost or pricing data.

* * * * *

PART 44—SUBCONTRACTING POLICIES AND PROCEDURES

44.202–2 [Amended]

39. Amend section 44.202–2 in paragraph (a)(8) by removing ''current cost'' and adding ''current certified cost'' in its place.

44.303 [Amended]

40. Amend section 44.303 in paragraph (b) by removing ''current cost'' and adding ''current certified cost'' in its place.

44.305–3 [Amended]

41. Amend section 44.305–3 in paragraph (a)(1) by removing ''Cost'' and adding ''Certified cost'' in its place.

PART 49—TERMINATION OF CONTRACTS

49.105 [Amended]

42. Amend section 49.105 in paragraph (c)(15) by removing ''current

cost'' and adding ''current certified cost'' in its place.

49.603–1 [Amended]

43. Amend section 49.603–1 in paragraph (b)(7)(x) of the agreement by removing ''defective cost'' and adding ''defective certified cost'' in its place.

49.603–2 [Amended]

44. Amend section 49.603–2 in paragraph (b)(8)(vii) of the agreement by removing ''defective cost'' and adding ''defective certified cost'' in its place.

49.603–3 [Amended]

45. Amend section 49.603–3 in paragraph (b)(7)(xv) of the agreement by removing ''defective cost'' and adding ''defective certified cost'' in its place.

49.603–4 [Amended]

46. Amend section 49.603–4 in paragraph (b)(4)(viii) of the agreement by removing ''defective cost'' and adding ''defective certified cost'' in its place.

PART 52—SOLICITATION PROVISIONS AND CONTRACT CLAUSES

47. Amend section 52.214–26 by—

a. Revising the date of the clause;

b. Revising the introductory text of paragraph (b); and

c. Removing from paragraph (e) ''of cost'' and adding ''of certified cost'' in its place.

The revised text reads as follows:

52.214–26 Audit and Records—Sealed Bidding.

* * * * *

AUDIT AND RECORDS—SEALED BIDDING (DATE)

* * * * *

(b) *Certified cost or pricing data.* If the Contractor has been required to submit certified cost or pricing data or data other than certified cost or pricing data in connection with the pricing of any modification to this contract, the Contracting Officer, or an authorized representative of the Contracting Officer, in order to evaluate the accuracy, completeness, and currency of the certified cost or pricing data, shall have the right to examine and audit all of the Contractor's records, including computations and projections, related to—

* * * * *

48. Amend section 52.214–27 by—

a. Revising the section heading;

b. Revising the clause heading and date of the clause;

c. Removing from paragraph (a) ''of cost'' and adding ''of certified cost'' in its place;

d. Removing from paragraph (b)(1) ''furnished cost'' and adding ''furnished certified cost'' in its place; and removing from paragraph (b)(2) ''Contractor cost'' and adding ''Contractor certified cost'' in its place;

e. Removing from paragraph (c)(2) ''defective cost'' and adding ''defective certified cost'' in its place;

f. Removing from paragraph (d)(1)(i) ''current cost'' and adding ''current certified cost'' in its place; and removing from paragraph (d)(1)(ii) ''the cost'' and adding ''the certified cost'' in its place;

g. Removing from paragraph (d)(2)(i)(B) ''the cost'' and adding ''the certified cost'' in its place; and

h. Removing from paragraph (e)(2) ''submitted cost'' and adding ''submitted certified cost'' in its place;

The revised text reads as follows:

52.214–27 Price Reduction for Defective Certified Cost or Pricing Data—Modifications—Sealed Bidding.

* * * * *

PRICE REDUCTION FOR DEFECTIVE CERTIFIED COST OR PRICING DATA—MODIFICATIONS—SEALED BIDDING (DATE)

* * * * *

49. Amend section 52.214–28 by—

a. Revising the section heading;

b. Revising the clause heading and date of the clause;

c. Removing from paragraph (a)(1) ''of cost'' and adding ''of certified cost'' in its place;

d. Revising paragraph (b); and

e. Removing from paragraph (d) ''of cost'' and adding ''of certified cost'' in its place.

The revised text reads as follows:

52.214–28 Subcontractor Certified Cost or Pricing Data—Modifications—Sealed Bidding.

* * * * *

SUBCONTRACTOR CERTIFIED COST OR PRICING DATA—MODIFICATIONS—SEALED BIDDING (DATE)

* * * * *

(b) Before awarding any subcontract expected to exceed the threshold for submission of certified cost or pricing data at FAR 15.804–2(a)(1), on the date of agreement on price or the date of award, whichever is later; or before pricing any subcontract modifications involving aggregate increases and/or decreases in costs, plus applicable profits, expected to exceed the threshold for submission of certified cost or pricing data at FAR 15.804–2(a)(1), the Contractor shall require the subcontractor to submit certified cost or pricing data (actually or by specific identification in writing) and data other than certified cost or pricing data, unless an exception under FAR 15.403–1(b) applies.

* * * * *

50. Amend section 52.215–2 by—

a. Revising the date of the clause;

b. Revising the introductory text of paragraph (c); and

c. Removing from paragraph (g)(2) ''which cost'' and adding ''which certified cost'' in its place.

The revised text reads as follows:

52.215–2 Audit and Records—Negotiation.

* * * * *

AUDIT AND RECORDS—NEGOTIATION (DATE)

* * * * *

(c) *Certified cost or pricing data.* If the Contractor has been required to submit certified cost or pricing data and data other than certified cost or pricing data in connection with any pricing action relating to this contract, the Contracting Officer, or an authorized representative of the Contracting Officer, in order to evaluate the accuracy, completeness, and currency of the certified cost or pricing data, shall have the right to examine and audit all of the Contractor's records, including computations and projections, related to—

* * * * *

51. Amend section 52.215–9 by—

a. Revising the date of the clause;

b. In *Alternate I* by revising the date of *Alternate I* and paragraph (d)(1).

c. In *Alternate II* by revising the date of *Alternate II* and paragraph (d)(1).

The revised text reads as follows:

52.215–9 Changes or Additions to Make-or-Buy Program.

* * * * *

CHANGES OR ADDITIONS TO MAKE-OR-BUY PROGRAM (DATE)

* * * * *

Alternate I (Date). * * *

(d) * * *

(1) Support its proposal with certified cost or pricing data and data other than certified cost or pricing data when permitted and necessary to support evaluation; and

* * * * *

Alternate II (Date). * * *

(d) * * *

(1) Support its proposal with certified cost or pricing data and data other than certified cost or pricing data to permit evaluation; and

* * * * *

52. Amend section 52.215–10 by—

a. Revising the section heading;

b. Revising the clause heading and date of the clause;

c. Removing from paragraph (a)(1) ''furnished cost'' and adding ''furnished certified cost'' in its place, and removing from paragraph (a)(2) ''Contractor cost'' and adding ''Contractor certified cost'' in its place;

d. Removing from paragraph (b)(2) ''defective cost'' and adding ''defective certified cost'' in its place;

e. Removing from paragraph (c)(1)(i) ''current cost'' and adding ''current certified cost'' in its place, and removing from paragraphs (c)(1)(ii) and (c)(2)(i)(B) ''the cost'' and adding ''the certified cost'' in its place; and

f. Removing from paragraph (d)(2) ''submitted cost'' and adding ''submitted certified cost'' in its place.

The revised text reads as follows:

52.215–10 Price Reduction for Defective Certified Cost or Pricing Data.

* * * * *

PRICE REDUCTION FOR DEFECTIVE CERTIFIED COST OR PRICING DATA (DATE)

* * * * *

53. Amend section 52.215–11 by—

a. Revising the section heading;

b. Revising the clause heading and date of the clause;

c. Removing from paragraph (a) ''of cost'' and adding ''of certified cost'' in its place;

d. Removing from paragraph (b)(1) ''furnished cost'' and adding ''furnished certified cost'' in its place; and removing from paragraph (b)(2) ''Contractor cost'' and adding ''Contractor certified cost'' in its place;

e. Removing from paragraph (c)(2) ''defective cost'' and adding ''defective certified cost'' in its place;

f. Removing from paragraph (d)(1)(i) ''current cost'' and adding ''current certified cost'' in its place; and removing from paragraphs (d)(1)(ii) and (d)(2)(i)(B) ''the cost'' and adding ''the certified cost'' in its place; and

g. Removing from paragraph (e)(2) ''submitted cost'' and adding ''submitted certified cost'' in its place.

The revised text reads as follows:

52.215–11 Price Reduction for Defective Certified Cost or Pricing Data—Modifications.

* * * * *

PRICE REDUCTION FOR DEFECTIVE CERTIFIED COST OR PRICING DATA—MODIFICATIONS (DATE)

* * * * *

54. Amend section 52.215–12 by—

a. Revising the section heading;

b. Revising the clause heading and date of the clause;

c. Removing from paragraph (a) ''of cost'' each time it appears (twice) and adding ''of certified cost'' in its place, and removing ''submit cost'' and adding ''submit certified cost'' in its place;

d. Removing from the introductory text of paragraph (c) and (c)(1) ''of cost'' and adding ''of certified cost'' in its place; and

e. Removing from paragraph (c)(2) ''Subcontractor Cost'' and adding ''Subcontractor Certified Cost'' in its place.

The revised text reads as follows:

52.215–12 Subcontractor Certified Cost or Pricing Data.

* * * * *

SUBCONTRACTOR CERTIFIED COST OR PRICING DATA (DATE)

* * * * *

55. Amend section 52.215–13 by—

a. Revising the section heading;

b. Revising the clause heading and date of the clause;

c. Removing from paragraph (a)(1) ''of cost'' and adding ''of certified cost'' in its place;

d. Revising paragraph (b); and

e. Removing from paragraph (d) ''of cost'' and adding ''of certified cost'' in its place;

The revised text reads as follows:

52.215–13 Subcontractor Certified Cost or Pricing Data—Modifications.

* * * * *

SUBCONTRACTOR CERTIFIED COST OR PRICING DATA—MODIFICATIONS (DATE)

* * * * *

(b) Before awarding any subcontract expected to exceed the threshold for submission of certified cost or pricing data at FAR 15.403–4, on the date of agreement on price or the date of award, whichever is later; or before pricing any subcontract modification involving a pricing adjustment expected to exceed the threshold for submission of certified cost or pricing data at FAR 15.403–4, the Contractor shall require the subcontractor to submit certified cost or pricing data (actually or by specific identification in writing) and data other than certified cost or pricing data, unless an exception under FAR 15.403–1 applies.

* * * * *

52.215–14 [Amended]

56. Amend section 52.215–14 by—

a. Revising the date of the clause to read ''(Date)'';

b. Removing from the last sentence of paragraph (a) ''of cost'' and adding ''of certified cost'' in its place; and

c. Revising the date of *Alternate I* to read ''(*Date*)''.

52.215–15 [Amended]

57. Amend section 52.215–15 by revising the date of the clause to read ''(Date)''; and removing from paragraph (b)(2) and the second sentence of paragraph (c) ''which cost'' and adding ''which certified cost'' in its place.

58. Amend section 52.215–20 by—

a. Revising the section heading;

b. Revising the provision heading and date of the provision;

c. Revising the introductory text of paragraph (a) of the provision;

d. Removing from the first sentence of paragraph (a)(1) of the provision ''submitting cost'' and adding ''submitting certified cost'' in its place;

e. Revising the introductory text of paragraph (b) and (b)(1) of the provision;

f. Revising *Alternate I*;

g. Revising the date of *Alternate II*;

h. Revising the date of *Alternate III*;

i. Revising the date of *Alternate IV* and paragraphs (a) and (b).

The revised text reads as follows:

52.215–20 Requirements for Certified Cost or Pricing Data and Data Other Than Certified Cost or Pricing Data.

* * * * *

REQUIREMENTS FOR CERTIFIED COST OR PRICING DATA AND DATA OTHER THAN CERTIFIED COST OR PRICING DATA (DATE)

(a) *Exceptions from certified cost or pricing data.*

* * * * *

(b) *Requirements for certified cost or pricing data and data other than certified cost or pricing data.* If the offeror is not granted an exception from the requirement to submit certified cost or pricing data, the following applies:

(1) The offeror shall prepare and submit certified cost or pricing data, data other than certified cost or pricing data, and supporting attachments in accordance with the instructions contained in Table 15–2 of FAR 15.408 which is incorporated by reference with the same force and effect as though it were inserted here in full text. The instructions in Table 15–2 are incorporated as a mandatory format to be used in this contract, unless the Contracting Officer and the Contractor negotiate a different format and change this clause to use Alternative I.

* * * * *

Alternate I (Date). As prescribed in 15.408(l) and 15.403–5(b)(1), substitute the following paragraph (b)(1) for paragraph (b)(1) of the basic provision:

(b)(1) The offeror shall submit certified cost or pricing data, data other than certified cost or pricing data, and supporting attachments in the following format: [*Insert description of the data and format that are required, including access to records necessary to permit an adequate evaluation of the proposed price in accordance with 15.403–4. The description may be inserted at the time of issuing the solicitation, the contracting officer may specify that the offeror's format will be acceptable, or the description may be inserted as the result of negotiations.*]

Alternate II (Date). * * *

* * * * *

Alternate III (Date). * * *

* * * * *

Alternate IV (Date). * * *

(a) Submission of certified cost or pricing data is not required.

(b) Provide data described below: [*Insert description of the data and the format that are required, including access to records necessary to permit an adequate evaluation of the proposed price in accordance with 15.403–3.*]

59. Amend section 52.215–21 by—

a. Revising the section heading;

b. Revising the clause heading and date of the clause;

c. Revising the introductory text of paragraph (a) of the clause;

d. Removing from the first sentence of paragraph (a)(1) of the clause

''submitting cost'' and adding ''submitting certified cost'' in its place;

e. Removing from paragraph (a)(1)(ii)(A)(*1*) of the clause ''from cost'' and adding ''from certified cost'' in its place;

f. Revising the introductory text of paragraph (b) and (b)(1) of the clause;

g. Removing and reserving *Alternate I*;

h. Revising the date of *Alternate II*;

i. Revising the date of *Alternate III*;

j. Revising the date of *Alternate IV* and paragraphs (a) and (b).

The revised text reads as follows:

52.215–21 Requirements for Certified Cost or Pricing Data and Data Other Than Certified Cost or Pricing Data—Modifications.

* * * * *

REQUIREMENTS FOR CERTIFIED COST OR PRICING DATA AND DATA OTHER THAN CERTIFIED COST OR PRICING DATA—MODIFICATIONS (DATE)

(a) *Exceptions from certified cost or pricing data.*

* * * * *

(b) *Requirements for certified cost or pricing data and data other than certified cost or pricing data.* If the Contractor is not granted an exception from the requirement to submit certified cost or pricing data, the following applies:

(1) The Contractor shall submit certified cost or pricing data, data other than certified cost or pricing data, and supporting attachments in accordance with the instructions contained in Table 15–2 of FAR 15.408 which is incorporated by reference with the same force and effect as though it were inserted here in full text. The instructions in Table 15–2 are incorporated as a mandatory format to be used in this contract, unless the Contracting Officer and the Contractor negotiate a different format and change this clause to use Alternative I.

* * * * *

Alternate I [Reserved]

Alternate II (Date). * * *

* * * * *

Alternate III (Date). * * *

* * * * *

Alternate IV (Date). * * *

(a) Submission of certified cost or pricing data is not required.

(b) Provide data described below: [*Insert description of the data and the format that are required, including access to records necessary to permit an adequate evaluation of the proposed price in accordance with 15.403–3.*]

60. Amend section 52.216–25 by—

a. Revising the date of the clause;

b. Revising the third sentence of paragraph (a) of the clause; and

c. Removing from the paragraph (b) of the clause ''*and cost*'' and adding ''*and certified cost*'' in its place.

The revised text reads as follows:

52.216–25 Contract Definitization.

* * * * *

CONTRACT DEFINITIZATION (DATE)

(a) * * * The Contractor agrees to submit a _____ [*insert specific type of proposal; e.g., fixed-price or cost-and-fee*] proposal along with certified cost or pricing data and data other than certified cost or pricing data supporting its proposal.

* * * * *

52.230–2 [Amended]

61. Amend section 52.230–2 by revising the date of the clause to read ''(Date)''; and removing from the first sentences of paragraphs (a)(3) and (d) ''submitted cost'' and adding ''submitted certified cost'' in its place.

52.230–5 [Amended]

62. Amend section 52.230–5 by revising the date of the clause to read ''(Date)''; and removing from the first sentence of paragraph (a)(3) and the introductory text of paragraph (d) ''submitted cost'' and adding ''submitted certified cost'' in its place.

52.232–17 [Amended]

63. Amend section 52.232–17 by revising the date of the clause to read ''(Date)''; and removing from the first sentence of paragraph (a) ''Defective Cost'' and adding ''Defective Certified Cost'' in its place.

64. Amend section 52.244–2 by—

a. Revising the date of the clause;

b. Revising paragraph (f)(1)(v);

c. Removing from paragraph (f)(1)(vii)(C) ''reason cost'' and adding ''reason certified cost'' in its place; and

d. Removing from paragraphs (f)(1)(vii)(D) and (f)(1)(vii)(E) ''subcontractor's cost'' and adding ''subcontractor's certified cost'' in its place.

The revised text reads as follows:

52.244–2 Subcontracts.

* * * * *

SUBCONTRACTS (DATE)

* * * * *

(f) * * *

(1) * * *

(v) The subcontractor's current, complete, and accurate certified cost or pricing data, data other than certified cost or pricing data and Certificate of Current Cost or Pricing Data, if required by other contract provisions.

* * * * *

[FR Doc. 07–1927 Filed 4–20–07; 8:45 am]

BILLING CODE 6820–EP–S

Notices

Federal Register
Vol. 72, No. 77
Monday, April 23, 2007

This section of the FEDERAL REGISTER contains documents other than rules or proposed rules that are applicable to the public. Notices of hearings and investigations, committee meetings, agency decisions and rulings, delegations of authority, filing of petitions and applications and agency statements of organization and functions are examples of documents appearing in this section.

DEPARTMENT OF AGRICULTURE

Forest Service

Eastern Washington Cascades Provincial Advisory Committee and the Yakima Provincial Advisory Committee

AGENCY: Forest Service, USDA

ACTION: Notice of meetings

SUMMARY: The Eastern Washington Cascades Provincial Advisory Committee and the Yakima Provincial Advisory committee will meet on Friday, May 18, and on Thursday, June 14, 2007 at the Okanogan and Wenatchee National Forests Headquarters office, 215 Melody Lane, Wenatchee, WA. These meetings will begin at 9 a.m. and continue until 4 p.m. During these meetings Provincial Advisory Committee members will either continue discussion on Roadless Area considerations and potential Wilderness recommendations in conjunction with Forest Plan Revision for the Okanogan and Wenatchee National Forests or discuss Recreation Facility Master Planning. All Eastern Washington Cascades and Yakima Province Advisory Committee meetings are open to the public.

FOR FURTHER INFORMATION CONTACT: Direct questions regarding this meeting to Paul Hart, Designated Federal Official, USDA, Wenatchee National Forest, 215 Melody Lane, Wenatchee, Washington 98801, 509–664–9200.

Dated: April 17, 2007.

Paul Hart,

Designated Federal Official, Okanogan and Wenatchee National Forests.

[FR Doc. 07–1993 Filed 4–20–07; 8:45 am]

BILLING CODE 3410–11–M

DEPARTMENT OF COMMERCE

National Oceanic and Atmospheric Administration

Availability of Seats for the Gulf of the Farallones National Marine Sanctuary Advisory Council

AGENCY: National Marine Sanctuary Program (NMSP), National Ocean Service (NOS), National Oceanic and Atmospheric Administration, Department of Commerce (DOC).

ACTION: Notice and request for applications.

SUMMARY: The Gulf of the Farallones National Marine Sanctuary (Sanctuary) is seeking applicants for the following vacant seats on its Sanctuary Advisory Council (council): Maritime Activities/Recreational Alternate. Applicants are chosen based upon their particular expertise and experience in relation to the seat for which they are applying; community and professional affiliations; philosophy regarding the protection and management of marine resources; and possibly the length of residence in the area affected by the sanctuary. Applicants who are chosen as members should expect to serve 2- or 3-year terms, pursuant to the council's Charter.

DATES: Applications are due by June 15, 2007.

ADDRESSES: Application kits may be obtained from *http://www.farallones.noaa.gov/manage/sac.html,* or Kelley Higgason, 991 Marine Dr., The Presidio, San Francisco, CA 94129. Completed applications should be sent to the same address.

FOR FURTHER INFORMATION CONTACT: Kelley Higgason, 991 Marine Dr., The Presidio, San Francisco, CA 94129, 415–561–6622 ext. 202, *kelley.higgason@noaa.gov.*

SUPPLEMENTARY INFORMATION: The Sanctuary Advisory Council provides the Sanctuary Superintendent with advice on the management of the Sanctuary. Members provide advice to the Superintendent on issues affecting resource protection, the Sanctuary's primary purpose. The Council, through its members, serve as liaisons to the community regarding Sanctuary issues and act as a conduit, relaying the community's interests, concerns, and management needs to the Sanctuary. The Sanctuary Advisory Council members represent public interest groups, local industry, commercial and recreational user groups, academia, conservation groups, government agencies, and the general public. Members serve either 2- or 3-year terms in order to stagger Council membership and allow continuity.

Authority: 16 U.S.C. 1431, *et seq.*

(Federal Domestic Assistance Catalog Number 11.429 Marine Sanctuary Program)

Dated: April 16, 2007.

Daniel J. Basta,

Director, National Marine Sanctuary Program, National Ocean Service, National Oceanic and Atmospheric Administration.

[FR Doc. 07–1996 Filed 4–20–07; 8:45 am]

BILLING CODE 3510–NK–M

DEPARTMENT OF COMMERCE

National Oceanic and Atmospheric Administration

Availability of Grants Funds for Fiscal Year 2007

AGENCY: National Oceanic and Atmospheric Administration (NOAA), Department of Commerce (DOC).

ACTION: Notice.

SUMMARY: NOAA publishes this notice to change the funding amounts, year of funds, the approximate range of awards that will be made, and the earliest start dates of awards for the solicitation ''FR 2007 Regional Integrated Ocean Observing System Development,'' which was originally announced in the **Federal Register** on December 27, 2006. This notice applies to only those applicants who have already submitted letters of intent and who have been invited to submit full proposals.

DATES: Proposals must be submitted through Grants.gov no later than 5 p.m., Eastern Time, April 17, 2007.

ADDRESSES: Full proposal application packages should be submitted through Grants.gov APPLY. The standard NOAA funding application package is available at *http://www.grants.gov.*

If an applicant does not have Internet access, the applicant must submit through surface mail one set of originals (signed) and two copies of the proposals and related forms to the Coastal Services Center. No e-mail or fax copies will be accepted. Any U.S. Postal Service correspondence should be sent to the

attention of James Lewis Free, NOAA Coastal Services Center, 2234 South Hobson Avenue, Charleston, South Carolina, 29405–2413.

FOR FURTHER INFORMATION CONTACT: For administrative issues, contact James Lewis Free at 843–740–1185 (phone) or e-mail him at *James.L.Free@noaa.gov.* Technical questions on the IOOS announcement should be directed to the following people according to the focus area in question: RCOOS Development, Geno Olmi by telephone at 843–740–1230 (phone) or e-mail him at *Geno.Olmi@noaa.gov;* IOOS Applications and Product Development, Dave Eslinger by telephone (843) 740–1270, or by e-mail *Dave.Eslinger@noaa.gov;* and Data Management and Communications, Jim Boyd by telephone (843) 740–1278, or by e-mail *James.Boyd@noaa.gov.*

SUPPLEMENTARY INFORMATION: NOAA publishes this notice to change the funding amounts, year of funds, the approximate range of awards that will be made, and the earliest start dates of awards for the solicitation ''FY 2007 Regional Integrated Ocean Observing System Development'' announced in the **Federal Register** on December 27, 2006 (71 FR 77733). NOAA modifies the years of funding available to include FY 2008 funds, increases the approximate range of awards that will be made, and moves up the earliest start dates of awards for the NOAA Coastal Services Center Announcement of Opportunity, FY 2007 to more fully explain what funds will be used, how many awards might be made, and when awards may start. This notice applies to applicants who submitted letters of intent and who have been invited to submit full proposals. All other requirements for this solicitation remain the same.

Limitation of Liability

In no even will NOAA or the Department of Commerce be responsible for proposal preparation costs if this program is cancelled because of other agency priorities.

Publication of this announcement does not oblige NOAA to award any specific project or to obligate any available funds. Applicants are hereby given notice that funding for the Fiscal Year 2007 and 2008 program is contingent upon the availability of Fiscal Year 2007 and 2008 appropriations.

Universal Identifier

Applicants should be aware they are required to provide a Dun and Bradstreet Data Universal Numbering System (DUNS) number during the application process. See the October 30, 2002 **Federal Register**, (67, FR 66177) for additional information. Organizations can receive a DUNS number at no cost by calling the dedicated toll-free DUNS Number request line at 1–866–705–5711 or via the Internet at *http://www.dunandbradstreet.com.*

National Environmental Policy Act (NEPA)

NOAA must analyze the potential environmental impacts, as required by the National Environmental Policy Act (NEPA), for applicant projects or proposals which are seeking NOAA federal funding opportunities. Detailed information on NOAA compliance with NEPA can be found at the following NOAA NEPA Web site: *http://www.nepa.noaa.gov/,* including our NOAA Administrative Order 216–6 for NEPA, *http://www.nepa.noaa.gov/NAO216_6_TOC.pdf,* and the Council on Environmental Quality implementation regulations, *http://ceq.eh.doe.gov/nepa/regs/ceq/toc_ceq.htm.* Consequently, as part of an applicant's package, and under their description of their program activities, applicants are required to provide detailed information on the activities to be conducted, locations, sites, species and habitat to be affected, possible construction activities, and any environmental concerns that may exist (e.g., the use and disposal of hazardous or toxic chemicals, introduction of non-indigenous species, impacts to endangered and threatened species, aquaculture projects, and impacts to coral reef systems). In addition to providing specific information that will serve as the basis for any required impact analyses, applicants may also be requested to assist NOAA in drafting of an environmental assessment, if NOAA determines an assessment is required. Applicants will also be required to cooperate with NOAA in identifying feasible measures to reduce or avoid any identified adverse environmental impacts of their proposal. The failure to do so shall be grounds for not selecting an application. In some cases if additional information is required after an application is selected, funds can be withheld by the Grants Officer under a special award condition requiring the recipient to submit additional environmental compliance information sufficient to enable NOAA to make an assessment on any impacts that a project may have on the environment. The Department of Commerce Preaward Notification Requirements for Grants and Cooperative Agreements contained in the **Federal Register** notice of October 1, 2001 (66 FR 49917), as amended by the **Federal Register** notice published on October 30, 2002 (67 FR 66109), are applicable to this solicitation.

Paperwork Reduction Act

This document contains collection-of-information requirements subject to the Paperwork Reduction Act (PRA). The use of Standard Forms 424, 424A, 424B, SF–LLL, and CD–346 has been approved by the Office of Management and Budget (OMB) under the respective control numbers 0348–0043, 0348–0044, 0348–0040, 0348–0046, and 0605–0001. Notwithstanding any other provision of law, no person is required to respond to, nor shall any person be subject to a penalty for failure to comply with, a collection of information subject to the requirements of the PRA unless that collection of information displays a currently valid OMB control number.

Executive Order 12866

This notice has been determined to be not significant for purposes of Executive Order 12866.

Executive Order 13132 (Federalism)

It has been determined that this notice does not contain policies with Federalism implications as that term is defined in Executive Order 13132.

Administrative Procedure Act/ Regulatory Flexibility Act

Prior notice and an opportunity for public comment are not required by the Administrative Procedure Act or any other law for rules concerning public property, loans, grants, benefits, and contracts (5 U.S.C. 553(a)(2)). Because notice and opportunity for comment are not required pursuant to 5 U.S.C. 553 or any other law, the analytical requirements of the Regulatory Flexibility Act (5 U.S.C. 601 *et seq.*) are inapplicable. Therefore, a regulatory flexibility analysis has not been prepared.

Dated: April 12, 2007.

Nicholas Schmidt,

Deputy Director, Coastal Services Center.

[FR Doc. 07–1997 Filed 4–20–07; 8:45 am]

BILLING CODE 3510–12–M

DEPARTMENT OF COMMERCE

National Oceanic and Atmospheric Administration

[I.D. 041807C]

Caribbean Fishery Management Council; Public Meeting

AGENCY: National Marine Fisheries Service (NMFS), National Oceanic and Atmospheric Administration (NOAA), Commerce.

ACTION: Notice of a public meeting.

SUMMARY: The Caribbean Fishery Management Council (CFMC) will hold a conference call to vote on a motion on the establishing of the Council Coordination Committee.

DATES: The conference call will be held on May 4, 2007, from 2 p.m. to 3 p.m. EST.

ADDRESSES: The meeting will be held via conference call. For specific locations of listening stations, see **SUPPLEMENTARY INFORMATION**.

FOR FURTHER INFORMATION CONTACT: Diana Martino, Assistant to the Executive Director, Caribbean Fishery Management Council, 268 Munoz Rivera Avenue, Suite 1108, San Juan, Puerto Rico 00918–1920, telephone: (787) 766–5926.

SUPPLEMENTARY INFORMATION: Listening stations will be located the following locations:

1. Caribbean Fishery Management Council, 268 Munoz Rivera Avenue, Suite 1108, San Juan, Puerto Rico 00918; telephone: (787) 766–5926;
2. U.S. Virgin Islands Division of Fish and Wildlife, 6291 Estate Nazareth, St. Thomas, USVI 00802; telephone: (340) 775–6762; and
3. U.S. Virgin Islands Division of Fish and Wildlife, Rainbow Plaza, 45 Marshall, Frederiksted, St. Croix, USVI 00840; telephone: (340) 773–3450.

The conference call will begin at 2 p.m. EST and conclude no later than 3 p.m. EST. Magnuson-Stevens Reauthorization Act (MSRA) includes language authorizing the establishment of a Council Coordination Committee (CCC) consisting of the chairs, vice chairs, and executive directors of each of the 8 Councils, or other council members or staff, in order to discuss issues of relevance to all Councils, including issues related to the implementation of the MSRA. This action will allow the CFMC to implement the MSRA requirement.

Although non-emergency issues not on the agenda may come before the group for discussion, in accordance with the MSRA, those issues may not be the subject of formal action during this meeting. Action will be restricted to those issues specifically identified in this notice and any issues arising after publication of this notice that require emergency action under section 305(c) of the Magnuson-Stevens Fishery Conservation and Management Act, provided the public has been notified of the Council's intent to take final action to address the emergency.

Special Accommodations

The meeting is physically accessible to people with disabilities. Requests for sign language interpretation and/other auxiliary aids should be directed to Mr. Miguel A. Rolon, Executive Director, Caribbean Fishery Management Council (see **FOR FURTHER INFORMATION CONTACT**) at least 5 working days prior to the meeting.

Dated: April 18, 2007.

Tracey L. Thompson,

Acting Director, Office of Sustainable Fisheries, National Marine Fisheries Service.

[FR Doc. E7–7675 Filed 4–20–07; 8:45 am]

BILLING CODE 3510–22–S

DEPARTMENT OF COMMERCE

National Oceanic and Atmospheric Administration

[I.D. 041807D]

Pacific Fishery Management Council; Public Meeting/Workshop

AGENCY: National Marine Fisheries Service (NMFS), National Oceanic and Atmospheric Administration (NOAA), Commerce.

ACTION: Notice of three public meetings.

SUMMARY: Three Groundfish Stock Assessment Review (STAR) Panels will hold work sessions which are open to the public. The first STAR Panel will review new assessments for sablefish and longnose skate. The second STAR Panel will review new assessments for black rockfish and blue rockfish. The third STAR Panel will review new assessments for bocaccio and chilipepper rockfish.

DATES: The sablefish and longnose skate STAR Panel will be held beginning at 12:30 p.m., Monday, May 7, 2007. The meeting will continue on Tuesday, May 8, 2007 beginning at 8:30 a.m. through Friday, May 11, 2007. The meetings will end at 5 p.m. each day, or as necessary to complete business.

The black rockfish and blue rockfish STAR Panel will be held beginning at 12:30 p.m. on Monday, May 21, 2007. The meeting will continue on Tuesday, May 22, 2007 beginning at 8:30 a.m. through Friday, May 25, 2007. The meetings will end at 5 p.m. each day, or as necessary to complete business.

The bocaccio and chilipepper rockfish STAR Panel will be held beginning at 12:30 p.m. on Monday, June 25, 2007. The meeting will continue on Tuesday, June 26, 2007, beginning at 8:30 a.m. through Friday, June 29, 2007. The meetings will end at 5 p.m. each day, or as necessary to complete business.

ADDRESSES: The sablefish and longnose skate STAR Panel meeting will be held at NMFS, Hatfield Marine Science Center, Captain R. Barry Fisher Building, 2032 S.E. Oregon State University Drive, Newport, OR 97365–5296; telephone: (541) 867–0501.

The black rockfish and blue rockfish STAR Panel meeting will be held at Pacific States Marine Fisheries Commission, 205 S.E. Spokane Street, Suite 100, Portland, OR 97202; telephone: (503) 595–3100.

The bocaccio and chilipepper rockfish STAR Panel meeting will be held at NMFS, Southwest Fisheries Science Center, Meeting Room 188, 110 Shaffer Road, Santa Cruz, CA 95060; telephone: (831) 420–3900.

Council address: Pacific Fishery Management Council, 7700 NE Ambassador Place, Suite 101, Portland, OR 97220–1384.

FOR FURTHER INFORMATION CONTACT: Ms. Stacey Miller, Northwest Fisheries Science Center (NWFSC); telephone: (206) 437–5670; or Mr. John DeVore, Pacific Fishery Management Council; telephone: (503) 820–2280.

SUPPLEMENTARY INFORMATION: The purpose of the STAR Panel meetings is to review draft stock assessment documents and any other pertinent information, work with the Stock Assessment Teams to make necessary revisions, and produce STAR Panel reports for use by the Council family and other interested persons. No management actions will be decided by these STAR Panels. The STAR Panels' role will be development of recommendations and reports for consideration by the Council at either its June meeting in Foster City, CA (sablefish and longnose skate) or its September meeting in Boise, ID (black rockfish, blue rockfish, bocaccio, and chilipepper rockfish).

Although non-emergency issues not contained in the meeting agenda may come before the STAR Panel participants for discussion, those issues may not be the subject of formal STAR Panel action during these meetings. STAR Panel action will be restricted to those issues specifically listed in this

notice and any issues arising after publication of this notice that require emergency action under Section 305(c) of the Magnuson-Stevens Fishery Conservation and Management Act, provided the public has been notified of the STAR Panel participants' intent to take final action to address the emergency.

Special Accommodations

These meetings are physically accessible to people with disabilities. Requests for sign language interpretation or other auxiliary aids should be directed to Ms. Carolyn Porter at (503) 820–2280 at least 5 days prior to the meeting date.

Dated: April 18, 2007.

Tracey L. Thompson,

Acting Director, Office of Sustainable Fisheries, National Marine Fisheries Service.

[FR Doc. E7–7674 Filed 4–20–07; 8:45 am]

BILLING CODE 3510–22–S

DEPARTMENT OF DEFENSE

Office of the Secretary

Defense Health Board (DHB) Meeting

AGENCY: Department of Defense.

ACTION: Notice of partially-closed meeting.

SUMMARY: Pursuant to the Federal Advisory Committee Act of 1972 (5 U.S.C., Appendix as amended), the Sunshine in the Government Act of 1976 (5 U.S.C. 552b, as amended), and 41 CFR 102–3.150, and in accordance with section 10(a)(2) of Public Law, the following meeting is announced:

Name of Committee: Defense Health Board (DHB).

Dates: May 3, 2007.

Times: 9 a.m.–10 a.m. (Closed Session). 10 a.m.–12 p.m. (Open Session). 2 p.m.–4 p.m. (Open Session).

Place of Meeting: National Transportation Safety Board Conference Center, 429 L'Enfant Plaza, Washington, DC 20594.

Purpose of the Meeting: The purpose of the meeting is to address and deliberate pending and new Board issues and provide briefings for Board members on topics related to ongoing Board business.

Agenda: The Defense Health Board will receive a classified briefing on biowarfare threats during a closed session from 9 to 10 a.m. During the open session that follows the Board will receive updates on the Military Vaccine Program and from the DoD Vaccine Healthcare Centers. The Board will discuss the Department's efforts to prepare for a potential influenza pandemic and will receive a status report on seasonal influenza surveillance. The Board will also deliberate the draft findings and recommendations of the Mental Health Task Force. Established by Congress and operating as a Defense Health Board subcommittee, the Mental Health Task Force is charged to assess and recommend method for improving, the efficacy of mental health services provided to members of the Armed Forces by the Department of Defense.

The Board will also conduct an administrative session on the afternoon of May 3, 2007, in the same location following the open session. The administrative session is closed to the public.

Pursuant to 5 U.S.C. 552b, as amended, and 41 CFR 102–3.155, in the interest of national security, the Department of Defense has determined that the session of the Defense Health Board meeting from 9 to 10 a.m. on May 3, 2007 will be closed to the public. The Under Secretary of Defense (Personnel and Readiness), in consultation with the Officer of the DoD General Counsel, has determined in writing that the public interest requires that the one-hour session on May 3, 2007 be closed to public because it concerns matters listed in section 552b(c)(1) of title 5, United States Code. Specifically the information presented meets criteria established by an executive order to be kept secret in the interest of national defense and foreign policy.

Pursuant to 5 U.S.C. 552b, as amended, and 41 CFR 102–3.140 through 102–3.165 and subject availability of space, the Defense Health Board meeting from 10 a.m. to 4 p.m. on May 3, 2007 is open to the public. Any member of the public wishing to provide input to the Defense Health Board should submit a written statement in accordance with 41 CFR 102–3.140(C) and section 10(a)(3) of the Federal Advisory Committee Act, and the procedures described in this notice. Written statement should be not longer than two type-written pages and must address the following detail: The issue, discussion, and a recommended course of action. Supporting documentation may also be included as needed to establish the appropriate historical context and to provide any necessary background information.

Individuals submitting a written statement may submit their statement to the Designated Federal Officer at the Address detained below at any point. However, if the written statement is not received at least 10 calendar days prior to the meeting, which is subject to this notice, then it may not be provided to or considered by the Defense Health Board until the next open meeting.

The Designated Federal Officer will review all timely submissions with the Defense Health Board Chairperson, and ensure they are provided to members of the Defense Health board before the meeting that is subject to this notice. After reviewing the written comments, the Chairperson and the Designated Federal Officer may choose to invite the submitter of the committee to orally present their issue during an open portion of this meeting or at a future meeting.

The Designated Federal Officer, in consultation with the Defense Health Board Chairperson, may, if desired, allot a specific amount of time for members of the public to present their issues for review and discussion by the Defense Health Board.

FOR FURTHER INFORMATION CONTACT: Colonel Roger L. Gibson, Executive Secretary, Defense Health Board, Five Skyline Place, 5111 Leesburg Pike, Room 810, Falls Church, Virginia 22041–3206, (703) 681–3279, Ext 123, Fax: (703) 681–3321, (*roger.gibson@ha.osd.mil*). Additional information and meeting registration is available on line at the Defense Health Board Web site, *http://www.ha.osd.mil/dhb.* The public is encouraged to register for the meeting. Written statements may be mailed to the above address, e-mailed to *dhb@ha.osd.mil* or faxed to (703) 681–3321.

Dated: April 17, 2007

L. M. Bynum,

Alternate OSD Federal Register, Liaison Officer, Department of Defense.

[FR Doc. 07–2024 Filed 4–19–07; 11:22 am]

BILLING CODE 5001–06–M

DEPARTMENT OF DEFENSE

Department of the Army

Army Science Board Plenary Meeting

AGENCY: Department of the Army, DoD.

ACTION: Notice of open meeting.

SUMMARY: Pursuant to the Federal Advisory Committee Act of 1972 (5 U.S.C., Appendix, as amended), the Sunshine in the Government Act of 1976 (5 U.S.C. 552b, as amended) and 41 Code of Federal Regulations (CFR) 102–3.140 through 160, the Department of the Army announces the following committee meeting:

Name of Committee: Army Science Board (ASB).

Date(s) of Meeting: April 23–24, 2007.

Time(s) of Meeting: 0800–1700, April 23, 2007. 0800–1700, April 24, 2007.

Place of Meeting: Photonics Center at Boston University, Boston, MA.

FOR FURTHER INFORMATION CONTACT: For information on Counter Asymmetric Threat, please contact Kathy Moses at (865) 574–8898 or e-mail: *mosesk@ornl.gov*, for further information on Options for an Affordable LandWarNet, please contact MAJ Fritz McNair at (703) 604–7108 or e-mail: *fritzgerald.mcnair@hqda.army.mil*, and for Homeland Security/Defense, contact Joe Foreman at (703) 602–8112 or e-mail: *Joe.Foreman@us.army.mil* or for further information, please contact Wayne Joyner (703) 604–7490 or e-mail: *wayne.joyner@saalt.army.mil.*

SUPPLEMENTARY INFORMATION: Proposed Agenda: The agenda for the Army Science Board (ASB) will include speakers, subject matter experts and current members and/or consultants who will brief on both specific information to a study and valuable information for the board as a whole. Our three studies, Counter Asymmetric Threat (CAT), Options for an Affordable LandWarNet (LandNet) and Homeland Security/Defense (HLS) will also be meeting to continue their research into specific study topics that each study finds necessary. The ASB will continue to identify findings and recommendations to be presented at our two week outbrief in July.

The meeting will begin at 8 a.m. and end at 5 p.m. each day.

Due to scheduling difficulties the U.S. Army Science Board was unable to finalize its agenda in time to publish notice of its meeting in the **Federal Register** for the 15-calendar days required by 41 CFR 102–3.150(a). Accordingly, the Committee Management Officer for the Department of Defense, pursuant to 41 CFR 102–3.150(b), waives the 15-calendar day notification requirement.

Brenda S. Bowen,

Army Federal Register Liaison Officer.

[FR Doc. 07–2023 Filed 4–19–07; 11:18 am]

BILLING CODE 3710–08–M

DEPARTMENT OF EDUCATION

Submission for OMB Review; Comment Request

AGENCY: Department of Education.

SUMMARY: The IC Clearance Official, Regulatory Information Management Services, Office of Management invites comments on the submission for OMB review as required by the Paperwork Reduction Act of 1995.

DATES: Interested persons are invited to submit comments on or before May 23, 2007.

ADDRESSES: Written comments should be addressed to the Office of Information and Regulatory Affairs, Attention: Education Desk Officer, Office of Management and Budget, 725 17th Street, NW., Room 10222, Washington, DC 20503. Commenters are encouraged to submit responses electronically by e-mail to *oira_submission@omb.eop.gov* or via fax to (202) 395–6974. Commenters should include the following subject line in their response ''Comment: [insert OMB number], [insert abbreviated collection name, *e.g.*, ''Upward Bound Evaluation'']. Persons submitting comments electronically should not submit paper copies.

SUPPLEMENTARY INFORMATION: Section 3506 of the Paperwork Reduction Act of 1995 (44 U.S.C. Chapter 35) requires that the Office of Management and Budget (OMB) provide interested Federal agencies and the public an early opportunity to comment on information collection requests. OMB may amend or waive the requirement for public consultation to the extent that public participation in the approval process would defeat the purpose of the information collection, violate State or Federal law, or substantially interfere with any agency's ability to perform its statutory obligations. The IC Clearance Official, Regulatory Information Management Services, Office of Management, publishes that notice containing proposed information collection requests prior to submission of these requests to OMB. Each proposed information collection, grouped by office, contains the following: (1) Type of review requested, *e.g.* new, revision, extension, existing or reinstatement; (2) Title; (3) Summary of the collection; (4) Description of the need for, and proposed use of, the information; (5) Respondents and frequency of collection; and (6) Reporting and/or Recordkeeping burden. OMB invites public comment.

Dated: April 17, 2007.

Angela C. Arrington,

IC Clearance Official, Regulatory Information Management Services, Office of Management.

Federal Student Aid

Type of Review: Revision.

Title: Fiscal Operations Report for 2006–2007 and Application to Participate for 2008–2009 (FISAP) and Reallocation Form E40–4P.

Frequency: Annually.

Affected Public: Not-for-profit institutions; Businesses or other for-profit; State, Local, or Tribal Gov't, SEAs or LEAs.

Reporting and Recordkeeping Hour Burden:

Responses: 5,798.

Burden Hours: 27,936.

Abstract: This application data will be used to compute the amount of funds needed by each school for the 2008–2009 award year. The Fiscal Operations Report data will be used to assess program effectiveness, account for funds expended during the 2006–2007 award year, and as part of the school funding process. The Reallocation form is part of the FISAP on the web. Schools will use it in the summer to return unexpended funds for 2006–2007 and request supplemental FWS funds for 2007–2008.

Requests for copies of the information collection submission for OMB review may be accessed from *http://edicsweb.ed.gov*, by selecting the ''Browse Pending Collections'' link and by clicking on link number 3279. When you access the information collection, click on ''Download Attachments'' to view. Written requests for information should be addressed to U.S. Department of Education, 400 Maryland Avenue, SW., Potomac Center, 9th Floor, Washington, DC 20202–4700. Requests may also be electronically mailed to *ICDocketMgr@ed.gov* or faxed to 202–245–6623. Please specify the complete title of the information collection when making your request.

Comments regarding burden and/or the collection activity requirements should be electronically mailed to *ICDocketMgr@ed.gov.* Individuals who use a telecommunications device for the deaf (TDD) may call the Federal Information Relay Service (FIRS) at 1–800–877–8339.

[FR Doc. E7–7629 Filed 4–20–07; 8:45 am]

BILLING CODE 4000–01–P

DEPARTMENT OF EDUCATION

[CFDA No. 84.336C]

Teacher Quality Enhancement Grants Program—Recruitment Grants for States and Partnerships

AGENCY: Office of Postsecondary Education, Department of Education.

ACTION: Notice of intent to fund down the grant slate for the Teacher Quality Enhancement Grants Program—Recruitment Grants for States and Partnerships.

SUMMARY: The Secretary intends to use the grant slate developed for the

Teacher Quality Enhancement Grants Program—Recruitment Grants for States and Partnerships in fiscal year (FY) 2005 to make new grant awards in FY 2007. The Secretary takes this action because a significant number of high-quality applications remain on the FY 2005 grant slate.

FOR FURTHER INFORMATION CONTACT: Luretha Kelley, U.S. Department of Education, Office of Postsecondary Education, 1990 K Street, NW., room 7906, Washington, DC 20006. Telephone: (202) 502–7645, Fax: 202–502–7699 or e-mail: *luretha.kelley@ed.gov*.

If you use a telecommunications device for the deaf (TDD), you may call the Federal Relay Service (FRS) at 1–800–877–8339.

Individuals with disabilities may obtain this document in an alternative format (e.g., Braille, large print, audiotape, or computer diskette) on request to the program contact person listed under **FOR FURTHER INFORMATION CONTACT**.

SUPPLEMENTARY INFORMATION:

Background

On March 21, 2005, we published a notice in the **Federal Register** (70 FR 13486) inviting applications for new awards under the Teacher Quality Enhancement Grants Program—Recruitment Grants for States and Partnerships. We received a significant number of applications in this competition and made 20 new grant awards. Because such a large number of high-quality applications were received, many applications that were awarded high scores by peer reviewers did not receive funding in FY 2005.

The Department estimates that there will be approximately $2.6 million available for new awards under this program in FY 2007. In order to conserve funding that would have been required for a peer review of new applications submitted under the program, we intend to select grantees in FY 2007 from the existing slate of applicants. This slate was developed during the FY 2005 competition using the selection criteria in the March 21, 2005 notice. No changes to the selection criteria will be required by this action.

Electronic Access to This Document

You may view this document, as well as all other documents of this Department published in the **Federal Register**, in text or Adobe Portable Document Format (PDF) on the Internet at the following site: *http://www.ed.gov/news/fedregister*.

To use PDF you must have Adobe Acrobat Reader, which is available free at this site. If you have questions about using PDF, call the U.S. Government Printing Office (GPO), toll free, at 1–888–293–6498; or in the Washington, DC, area at (202) 512–1530.

Note: The official version of this document is the document published in the **Federal Register**. Free Internet access to the official edition of the **Federal Register** and the Code of Federal Regulations is available on GPO Access at: *http://www.gpoaccess.gov/nara/index.html*.

Program Authority: 20 U.S.C. 1024.

Dated: April 18, 2007.

James F. Manning,

Delegated the Authority of Assistant Secretary for Postsecondary Education.

[FR Doc. E7–7684 Filed 4–20–07; 8:45 am]

BILLING CODE 4000–01–P

DEPARTMENT OF ENERGY

Environmental Management Site-Specific Advisory Board, Nevada

AGENCY: Department of Energy.

ACTION: Notice of open meeting.

SUMMARY: This notice announces a meeting of the Environmental Management Site-Specific Advisory Board (EM SSAB), Nevada Test Site. The Federal Advisory Committee Act (Pub. L. 92–463, 86 Stat. 770) requires that public notice of this meeting be announced in the **Federal Register**.

DATES: Wednesday, May 9, 2007, 5 p.m.

ADDRESSES: 7710 West Cheyenne Avenue, Conference Room #130, Las Vegas, Nevada.

FOR FURTHER INFORMATION CONTACT: Kelly Snyder, Deputy Designated Federal Officer, P.O. Box 98518, Las Vegas, Nevada 89193. Phone: (702) 295–2836; E-mail: *snyderk@nv.doe.gov.*

SUPPLEMENTARY INFORMATION:

Purpose of the Board: The purpose of the Board is to make recommendations to DOE in the areas of environmental restoration, waste management, and related activities.

Tentative Agenda:

1. Briefing on Role in Environmental Management Activities, Nevada Division of Environmental Protection.

2. Updates by the Board's working committees.

Public Participation: The meeting is open to the public. Written statements may be filed with the Board either before or after the meeting. Individuals who wish to make oral presentations pertaining to agenda items should contact Kelly Snyder at the telephone number listed above. The request must be received five days prior to the meeting and reasonable provision will be made to include the presentation in the agenda. The Deputy Designated Federal Officer is empowered to conduct the meeting in a fashion that will facilitate the orderly conduct of business. Individuals wishing to make public comment will be provided a maximum of five minutes to present their comments.

Minutes: The minutes of this meeting will be available for public review and copying at the U.S. Department of Energy's Freedom of Information Public Reading Room, 1E–190, Forrestal Building, 1000 Independence Avenue, SW., Washington, DC 20585 between 9 a.m. and 4 p.m., Monday through Friday, except Federal holidays. Minutes will also be available by writing to Kelly Snyder at the address listed above.

Issued at Washington, DC on April 17, 2007.

Rachel Samuel,

Deputy Advisory Committee Management Officer.

[FR Doc. E7–7652 Filed 4–20–07; 8:45 am]

BILLING CODE 6450–01–P

DEPARTMENT OF ENERGY

Environmental Management Site-Specific Advisory Board, Oak Ridge Reservation

AGENCY: Department of Energy.

ACTION: Notice of open meeting.

SUMMARY: This notice announces a meeting of the Environmental Management Site-Specific Advisory Board (EM SSAB), Oak Ridge Reservation. The Federal Advisory Committee Act (Pub. L. 92–463, 86 Stat. 770) requires that public notice of this meeting be announced in the **Federal Register**.

DATES: Wednesday, May 9, 2007, 6 p.m.

ADDRESSES: DOE Information Center, 475 Oak Ridge Turnpike, Oak Ridge, Tennessee.

FOR FURTHER INFORMATION CONTACT: Pat Halsey, Federal Coordinator, Department of Energy Oak Ridge Operations Office, P.O. Box 2001, EM–90, Oak Ridge, TN 37831. Phone (865) 576–4025; Fax (865) 576–5333 or e-mail: *halseypj@oro.doe.gov* or check the Web site at *www.oakridge.doe.gov/em/ssab*.

SUPPLEMENTARY INFORMATION:

Purpose of the Board: The purpose of the Board is to make recommendations to DOE in the areas of environmental restoration, waste management, and related activities.

Tentative Agenda:

6 p.m. Board Business Meeting.
6:30 p.m. 2006 Remediation Effectiveness Report/CERCLA Five-Year Review for the Department of Energy, Oak Ridge Reservation.

Public Participation: The meeting is open to the public. Written statements may be filed with the Board either before or after the meeting. Individuals who wish to make oral statements pertaining to the agenda item should contact Pat Halsey at the address or telephone number listed above. Requests must be received five days prior to the meeting and reasonable provision will be made to include the presentation in the agenda. The Deputy Designated Federal Officer is empowered to conduct the meeting in a fashion that will facilitate the orderly conduct of business. Individuals wishing to make public comment will be provided a maximum of five minutes to present their comments.

Minutes: Minutes of this meeting will be available for public review and copying at the Department of Energy's Information Center at 475 Oak Ridge Turnpike, Oak Ridge, TN between 8 a.m. and 5 p.m., Monday through Friday, or by writing to Pat Halsey, Department of Energy Oak Ridge Operations Office, P.O. Box 2001, EM–90, Oak Ridge, TN 37831, or by calling her at (865) 576–4025.

Issued at Washington, DC on April 17, 2007.

Rachel M. Samuel,

Deputy Advisory Committee Management Officer.

[FR Doc. E7–7654 Filed 4–20–07; 8:45 am]

BILLING CODE 6450–01–P

DEPARTMENT OF ENERGY

Office of Science; High Energy Physics Advisory Panel

AGENCY: Department of Energy.

ACTION: Notice of open meeting.

SUMMARY: This notice announces a meeting of the High Energy Physics Advisory Panel (HEPAP). Federal Advisory Committee Act (Public Law 92–463, 86 Stat. 770) requires that public notice of these meetings be announced in the **Federal Register**.

DATES: Friday, July 13, 2007; 9 a.m. to 6:30 p.m. and Saturday, July 14, 2007; 8:30 a.m. to 1 p.m.

ADDRESSES: Hotel Palomar, 2121 P St, NW., Washington, DC.

FOR FURTHER INFORMATION CONTACT: John Kogut, Executive Secretary; High Energy Physics Advisory Panel; U.S. Department of Energy; SC–25/ Germantown Building, 1000 Independence Avenue, SW., Washington, DC 20585–1290; Telephone: 301–903–1298.

SUPPLEMENTARY INFORMATION:

Purpose of Meeting: To provide advice and guidance on a continuing basis with respect to the high energy physics research program.

Tentative Agenda: Agenda will include discussions of the following:

Friday, July 13, 2007, and Saturday, July 14, 2007.

- Discussion of Department of Energy High Energy Physics Program
- Discussion of National Science Foundation Elementary Particle Physics Program
- Reports on and Discussions of Topics of General Interest in High Energy Physics
- Public Comment (10-minute rule)

Public Participation: The meeting is open to the public. If you would like to file a written statement with the Panel, you may do so either before or after the meeting. If you would like to make oral statements regarding any of these items on the agenda, you should contact John Kogut, 301–903–1298 or *John.Kogut@science.doe.gov* (e-mail). You must make your request for an oral statement at least 5 business days before the meeting. Reasonable provision will be made to include the scheduled oral statements on the agenda. The Chairperson of the Panel will conduct the meeting to facilitate the orderly conduct of business. Public comment will follow the 10-minute rule.

Minutes: The minutes of the meeting will be available for public review and copying within 90 days at the Freedom of Information Public Reading Room; Room 1E–190; Forrestal Building; 1000 Independence Avenue, SW.; Washington, DC, between 9 a.m. and 4 p.m., Monday through Friday, except Federal holidays.

Issued at Washington, DC on April 17, 2007.

R. Samuel,

Deputy Advisory Committee Management Officer.

[FR Doc. E7–7645 Filed 4–20–07; 8:45 am]

BILLING CODE 6450–01–P

DEPARTMENT OF ENERGY

Federal Energy Regulatory Commission

Combined Notice of Filings #1

April 13, 2007.

Take notice that the Commission received the following electric corporate filings:

Docket Numbers: EC07–77–000.
Applicants: Progress Ventures, Inc.; Constellation Energy Commodities Group, Inc.
Description: Progress Ventures Inc. and Constellation Energy submit an Application for approval of the disposition of jurisdictional facilities.
Filed Date: 04/05/2007.
Accession Number: 20070411–0071.
Comment Date: 5 p.m. Eastern Time on Thursday, April 26, 2007.

Docket Numbers: EC07–78–000.
Applicants: Blue Canyon Windpower, LLC; Blue Canyon Windpower II LLC; Flat Rock Windpower LLC; Flat Rock Windpower II LLC; High Prairie Wind Farm II, LLC; High Trail Wind Farm, LLC; Old Trail Wind Farm, LLC; Telocaset Wind Power Partners, LLC; GS Wind Holdings, LLC; EDP-Energias De Portugal, S.A.
Description: Wind Project Companies et al submit their joint application for authorization for disposition of jurisdictional facilities and on 4/12/07 amended their filing.
Filed Date: 04/10/2007; 04/10/07.
Accession Number: 20070412–0176.
Comment Date: 5 p.m. Eastern Time on Tuesday, May 1, 2007.

Take notice that the Commission received the following electric rate filings:

Docket Numbers: ER01–1699–006.
Applicants: Pilot Power Group, Inc.
Description: Pilot Power Group, Inc submits its updated market analysis in compliance with the Commission's letter order issued 4/30/01.
Filed Date: 04/11/2007.
Accession Number: 20070412–0089.
Comment Date: 5 p.m. Eastern Time on Wednesday, May 2, 2007.

Docket Numbers: ER03–879–005; ER03–880–005; ER03–882–005.
Applicants: D.E. Shaw Plasma Power, L.L.C.; D.E. Shaw Plasma Trading, L.L.C.; D. E. Shaw & Co. Energy, L.L.C.
Description: D.E. Shaw Plasma Power, L.L.C., *et al.* submit a Notice of Non-Material Change in Status.
Filed Date: 04/11/2007.
Accession Number: 20070411–5104.
Comment Date: 5 p.m. Eastern Time on Wednesday, May 2, 2007.

Docket Numbers: ER03–985–002.
Applicants: El Cap II, LLC.
Description: El Cap II, LLC re-submits revisions to their 4/2/07 filing of Substitute First Revised Sheet 1 to FERC Electric Rate Schedule 1.
Filed Date: 04/09/2007.
Accession Number: 20070412–0075.
Comment Date: 5 p.m. Eastern Time on Monday, April 30, 2007.

Docket Numbers: ER06–1349–001.
Applicants: Southwest Power Pool, Inc.

Description: Southwest Power Pool, Inc re-submits the revised and re-executed Service Agreements as an amendment to the 8/9/06 filing for Firm Point-to Point Transmission Service with Kansas Municipal Energy Agency.

Filed Date: 04/05/2007.

Accession Number: 20070411–0069.

Comment Date: 5 p.m. Eastern Time on Thursday, April 26, 2007.

Docket Numbers: ER06–1367–002; ER07–239–001; ER99–1714–005.

Applicants: BG Dighton Power, LLC; BG Energy Merchants, LLC; Lake Road Generating Company, L.P.

Description: BG Dighton Power, LLC, BG Energy Merchants, LLC & Lake Road Generating, LP submit notification of change in status to inform the Commission of a non-material departure from the characteristics relied upon.

Filed Date: 04/10/2007.

Accession Number: 20070412–0101.

Comment Date: 5 p.m. Eastern Time on Tuesday, May 1, 2007.

Docket Numbers: ER06–706–002.

Applicants: Entergy Services, Inc.

Description: Entergy Arkansas, Inc submits report of refunds pursuant to FERC's 3/16/07 Letter Order.

Filed Date: 04/10/2007.

Accession Number: 20070412–0098.

Comment Date: 5 p.m. Eastern Time on Tuesday, May 1, 2007.

Docket Numbers: ER07–219–001.

Applicants: ISO New England Inc.

Description: ISO New England, Inc. submit its report on requests for cost-based reliability agreements that have been received in anticipation of the elimination of the Peaking Unit Safe Harbor mechanism pursuant to FERC's 1/12/07 Order.

Filed Date: 04/10/2007.

Accession Number: 20070412–0100.

Comment Date: 5 p.m. Eastern Time on Tuesday, May 1, 2007.

Docket Numbers: ER07–361–002.

Applicants: Central Illinois Light Company; Central Illinois Public Service Company; Illinois Power Company.

Description: Central Illinois Light Company dba AmerenCILCO et al submits an explanation in response to FERC's 3/12/07 letter seeking additional information about the reconfiguration of the Balancing Authorities.

Filed Date: 04/10/2007.

Accession Number: 20070412–0088.

Comment Date: 5 p.m. Eastern Time on Tuesday, May 1, 2007.

Docket Numbers: ER07–732–000.

Applicants: Lake Road Generating Company, L.P.

Description: Lake Road Generating Company, LP submits an Amendment to its market-based rate schedule, FERC Electric Tariff 1.

Filed Date: 04/10/2007.

Accession Number: 20070412–0086.

Comment Date: 5 p.m. Eastern Time on Tuesday, May 1, 2007.

Docket Numbers: ER07–734–000.

Applicants: Southwest Power Pool, Inc.

Description: Southwest Power Pool, Inc submits an executed Meter Agent Services Agreement with Kansas Electric Power Cooperative et al.

Filed Date: 04/10/2007.

Accession Number: 20070412–0097.

Comment Date: 5 p.m. Eastern Time on Tuesday, May 1, 2007.

Docket Numbers: ER07–735–000.

Applicants: Exel Power Sources, LLC.

Description: Exel Power Sources, LLC submits a Petition for acceptance of Initial Tariff, Waivers and Blanket Authority and request for acceptance of FERC Electric Tariff, Original Volume 1 etc.

Filed Date: 04/10/2007.

Accession Number: 20070412–0087.

Comment Date: 5 p.m. Eastern Time on Tuesday, May 1, 2007.

Take notice that the Commission received the following public utility holding company filings:

Docket Numbers: PH07–10–000.

Applicants: Goldman Sachs Group, Inc.

Description: FERC Form 65 A Exemption Notification of The Goldman Sachs Group, Inc.

Filed Date: 04/11/2007.

Accession Number: 20070411–5060.

Comment Date: 5 p.m. Eastern Time on Wednesday, May 2, 2007.

Any person desiring to intervene or to protest in any of the above proceedings must file in accordance with Rules 211 and 214 of the Commission's Rules of Practice and Procedure (18 CFR 385.211 and 385.214) on or before 5 p.m. Eastern time on the specified comment date. It is not necessary to separately intervene again in a subdocket related to a compliance filing if you have previously intervened in the same docket. Protests will be considered by the Commission in determining the appropriate action to be taken, but will not serve to make protestants parties to the proceeding. Anyone filing a motion to intervene or protest must serve a copy of that document on the Applicant. In reference to filings initiating a new proceeding, interventions or protests submitted on or before the comment deadline need not be served on persons other than the Applicant.

The Commission encourages electronic submission of protests and interventions in lieu of paper, using the FERC Online links at *http://www.ferc.gov.* To facilitate electronic service, persons with Internet access who will eFile a document and/or be listed as a contact for an intervenor must create and validate an eRegistration account using the eRegistration link. Select the eFiling link to log on and submit the intervention or protests.

Persons unable to file electronically should submit an original and 14 copies of the intervention or protest to the Federal Energy Regulatory Commission, 888 First St., NE., Washington, DC 20426.

The filings in the above proceedings are accessible in the Commission's eLibrary system by clicking on the appropriate link in the above list. They are also available for review in the Commission's Public Reference Room in Washington, DC. There is an eSubscription link on the Web site that enables subscribers to receive e-mail notification when a document is added to a subscribed docket(s). For assistance with any FERC Online service, please e-mail *FERCOnlineSupport@ferc.gov.* or call (866) 208–3676 (toll free). For TTY, call (202) 502–8659.

Kimberly D. Bose,

Secretary.

[FR Doc. E7–7607 Filed 4–20–07; 8:45 am]

BILLING CODE 6717–01–P

DEPARTMENT OF ENERGY

Federal Energy Regulatory Commission

Combined Notice of Filings #1

April 16, 2007.

Take notice that the Commission received the following electric rate filings:

Docket Numbers: ER03–421–012.

Applicants: PPL Wallingford Energy LLC; PPL EnergyPlus, LLC.

Description: PPL Wallingford Energy LLC and PPL EnergyPlus, LLC submit a compliance Filing pursuant to the Commission's 3/23/07 order.

Filed Date: 4/12/2007.

Accession Number: 20070412–5031.

Comment Date: 5 p.m. Eastern Time on Thursday, May 3, 2007.

Docket Numbers: ER03–1398–005.

Applicants: South Carolina Electric & Gas Company.

Description: South Carolina Electric & Gas Co submits a compliance filing as required by the March 7, 2007 Order.

Filed Date: 4/6/2007.

Accession Number: 20070411–0070.

Comment Date: 5 p.m. Eastern Time on Friday, April 27, 2007.

Docket Numbers: ER07–721–000.

Applicants: Idaho Power Company.
Description: Idaho Power Co. submits its Standard Large Generator Interconnection Agreement filed with Telocaset Wind Power Partners, LLC.
Filed Date: 4/6/2007.
Accession Number: 20070411–0068.
Comment Date: 5 p.m. Eastern Time on Friday, April 27, 2007.

Docket Numbers: ER07–733–000.
Applicants: Central Illinois Public Service Company; Central Illinois Light Company; Illinois Power Company; Union Electric Company; Ameren Illinois Utilities.
Description: Ameren Services Co's et al. submits an application to make sales to affiliates for capacity for the period of 6/1/07–9/30/07.
Filed Date: 4/11/2007.
Accession Number: 20070412–0096.
Comment Date: 5 p.m. Eastern Time on Wednesday, May 2, 2007.

Docket Numbers: ER07–739–000.
Applicants: Aquila Long Term, Inc.
Description: Aquila Long Term, Inc submits a Notice of Cancellation of its FERC Electric Tariff, Original Volume 1, effective 6/11/07.
Filed Date: 4/12/2007.
Accession Number: 20070413–0145.
Comment Date: 5 p.m. Eastern Time on Thursday, May 3, 2007.

Docket Numbers: ER07–740–000.
Applicants: Southwestern Electric Power Company.
Description: Southwestern Electric Power Co submits a Power Supply Agreement for the Requirements Service dated 9/30/05 with Hope Water & Light Commission, Rate Schedule 210.
Filed Date: 4/12/2007.
Accession Number: 20070413–0146.
Comment Date: 5 p.m. Eastern Time on Thursday, May 3, 2007.

Docket Numbers: ER07–741–000.
Applicants: Southwestern Electric Power Company.
Description: Southwestern Electric Power Co submits a Power Supply Agreement for Requirements Service dated 12/13/06 with the City of Bentonville, Arkansas, Rate Schedule 211.
Filed Date: 4/12/2007.
Accession Number: 20070413–0147.
Comment Date: 5 p.m. Eastern Time on Thursday, May 3, 2007.

Docket Numbers: ER07–742–000.
Applicants: MidAmerican Energy Company.
Description: MidAmerican Energy Company submits the Confirmation Letter dated 4/9/07 with the City of Eldridge, Iowa and request waiver of the regulations.
Filed Date: 4/12/2007.
Accession Number: 20070413–0148.
Comment Date: 5 p.m. Eastern Time on Thursday, May 3, 2007.

Any person desiring to intervene or to protest in any of the above proceedings must file in accordance with Rules 211 and 214 of the Commission's Rules of Practice and Procedure (18 CFR 385.211 and 385.214) on or before 5 p.m. Eastern time on the specified comment date. It is not necessary to separately intervene again in a subdocket related to a compliance filing if you have previously intervened in the same docket. Protests will be considered by the Commission in determining the appropriate action to be taken, but will not serve to make protestants parties to the proceeding. Anyone filing a motion to intervene or protest must serve a copy of that document on the Applicant. In reference to filings initiating a new proceeding, interventions or protests submitted on or before the comment deadline need not be served on persons other than the Applicant.

The Commission encourages electronic submission of protests and interventions in lieu of paper, using the FERC Online links at *http://www.ferc.gov*. To facilitate electronic service, persons with Internet access who will eFile a document and/or be listed as a contact for an intervenor must create and validate an eRegistration account using the eRegistration link. Select the eFiling link to log on and submit the intervention or protests.

Persons unable to file electronically should submit an original and 14 copies of the intervention or protest to the Federal Energy Regulatory Commission, 888 First St., NE., Washington, DC 20426.

The filings in the above proceedings are accessible in the Commission's eLibrary system by clicking on the appropriate link in the above list. They are also available for review in the Commission's Public Reference Room in Washington, DC. There is an eSubscription link on the Web site that enables subscribers to receive e-mail notification when a document is added to a subscribed dockets(s). For assistance with any FERC Online service, please e-mail *FERCOnlineSupport@ferc.gov*. or call (866) 208–3676 (toll free). For TTY, call (202) 502–8659.

Philis J. Posey,

Deputy Secretary.

[FR Doc. E7–7630 Filed 4–20–07; 8:45 am]

BILLING CODE 6717–01–P

DEPARTMENT OF ENERGY

Federal Energy Regulatory Commission

[Project No. 2230–034–AK]

City and Borough of Sitka, AK; Notice of Availability of Environmental Assessment

April 17, 2007.

In accordance with the National Environmental Policy Act of 1969 and the Federal Energy Regulatory Commission's regulations, 18 CFR part 380 (Order No. 486, 52 FR 47879), the Office of Energy Projects has reviewed the application for a new license for the Blue Lake Hydroelectric Project, located on Sawmill Creek, near the City of Sitka, Alaska, and has prepared an Environmental Assessment (EA). In the EA, Commission staff analyze potential environmental effects of relicensing the project and conclude that issuing a new license for the project, with appropriate environmental measures, would not constitute a major federal action significantly affecting the quality of the human environment.

A copy of the EA is on file with the Commission and is available for public inspection. The EA may also be viewed on the Commission's Web site at *http://www.ferc.gov* using the ''eLibrary'' link. Enter the docket number excluding the last three digits in the docket number field to access the document. For assistance, contact FERC Online Support at *FERCOnlineSupport@ferc.gov* or toll-free at 1–866–208–3676, or for TTY, (202) 502–8659.

Any comments should be filed within 30 days from the issuance date of this notice, and should be addressed to the Secretary, Federal Energy Regulatory Commission, 888 First Street, NE., Room 1–A, Washington, DC 20426. Please affix ''Blue Lake Project No. 2230–034'' to all comments. Comments may be filed electronically via Internet in lieu of paper. The Commission strongly encourages electronic filings. See 18 CFR 385.2001(a)(1)(iii) and the instructions on the Commission's Web site under the ''eFiling'' link. For further information, contact Tom Dean at (202) 502–6041.

Kimberly D. Bose,

Secretary.

[FR Doc. E7–7662 Filed 4–20–07; 8:45 am]

BILLING CODE 6717–01–P

DEPARTMENT OF ENERGY

Federal Energy Regulatory Commission

Notice of Application of Operating Plan and Soliciting Comments, Motions To Intervene, and Protests

April 17, 2007.

Take notice that the following hydroelectric application has been filed with the Commission and is available for public inspection:

a. *Application Type:* Amendment of license for a change in water surface elevation limits for the upper reservoir.

b. *Project No.:* 2360–167.

c. *Date Filed:* October 19, 2006.

d. *Applicant:* ALLETE, Inc.

e. *Name of Project:* St. Louis Project.

f. *Location:* The project consisting of five headwater reservoirs and four hydroelectric developments is located in the St. Louis River Basin, in St. Louis and Carlton Counties, Minnesota, and in part on the Fond du Lac Indian reservation.

g. *Filed Pursuant to:* Federal Power Act, 16 U.S.C. 791a–825r.

h. *Applicant Contact:* Mr. Thomas R. Hughes, Supervisor Hydro Operations, 30 West Superior Street, Duluth, MN 55802. Tel: (218) 722–5642, extension 2130.

i. *FERC Contact:* Any questions on this notice should be addressed to Vedula Sarma at (202) 502–6190 or *vedula.sarma@ferc.gov*.

j. *Deadline for filing comments and/or motions:* May 18, 2007.

All documents (original and eight copies) should be filed with: Secretary, Federal Energy Regulatory Commission, 888 First Street, NE., Washington, DC 20426.

The Commission's Rules of Practice and Procedure require all interveners filing documents with the Commission to serve a copy of that document on each person whose name appears on the official service list for the project. Further, if an intervener files comments or documents with the Commission relating to the merits of an issue that may affect the responsibilities of a particular resource agency, they must also serve a copy of the document on that resource agency. A copy of any motion to intervene must also be served upon each representative of the Applicant specified in the particular application.

k. *Description of Request:* Pursuant Article 413 of the license, the licensee filed for Commission approval an Operating Plan for the St. Louis Project. The licensee says that based on consultations with the Federal and State resource agencies and non-governmental organizations, the Plan reflects minor changes to the currently authorized ramping rates, minimum flows and headwater refill elevation at Whiteface development.

l. *Locations of the Application:* A copy of the application is available for inspection and reproduction at the Commission's Public Reference Room, located at 888 First Street, NE., Room 2A, Washington, DC 20426, or by calling (202) 502–8371. This filing may also be viewed on the Commission's Web site at *http://www.ferc.gov* using the ''eLibrary'' link. Enter the docket number excluding the last three digits in the docket number field to access the document. You may also register online at *http://www.ferc.gov/docs-filing/esubscription.asp* to be notified via e-mail of new filings and issuances related to this or other pending projects. For assistance, call 1–866–208–3676 or e-mail *FERCOnlineSupport@ferc.gov*, for TTY, call (202) 502–8659. A copy is also available for inspection and reproduction at the address in item (h) above.

m. Individuals desiring to be included on the Commission's mailing list should so indicate by writing to the Secretary of the Commission.

n. Comments, Protests, or Motions to Intervene: Anyone may submit comments, a protest, or a motion to intervene in accordance with the requirements of Rules of Practice and Procedure, 18 CFR 385.210, .211, .214. In determining the appropriate action to take, the Commission will consider all protests or other comments filed, but only those who file a motion to intervene in accordance with the Commission's Rules may become a party to the proceeding. Any comments, protests, or motions to intervene must be received on or before the specified comment date for the particular application.

o. Any filings must bear in all capital letters the title ''COMMENTS'', ''PROTEST'', or ''MOTION TO INTERVENE'', as applicable, and the Project Number of the particular application to which the filing refers.

p. *Agency Comments:* Federal, State, and local agencies are invited to file comments on the described application. A copy of the application may be obtained by agencies directly from the Applicant. If an agency does not file comments within the time specified for filing comments, it will be presumed to have no comments. One copy of an agency's comments must also be sent to the Applicant's representatives.

q. Comments, protests and interventions may be filed electronically via the Internet in lieu of paper. See, 18 CFR 385.2001(a)(1)(iii) and the instructions on the Commission's Web site at *http://www.ferc.gov* under the ''e-Filing'' link.

Kimberly D. Bose,

Secretary.

[FR Doc. E7–7663 Filed 4–20–07; 8:45 am]

BILLING CODE 6717–01–P

DEPARTMENT OF ENERGY

Federal Energy Regulatory Commission

Notice of Application Accepted for Filing and Soliciting Comments, Motions To Intervene, and Protests

April 17, 2007.

Take notice that the following hydroelectric application has been filed with the Commission and is available for public inspection:

a. *Type of Application:* Competing Preliminary Permit.

b. *Project No.:* 12779–000.

c. *Date Filed:* February 27, 2007.

d. *Applicant:* Pacific Gas and Electric Company.

e. *Name of Project:* PG&E Humboldt WaveConnect Project.

f. *Location:* The project would be located in the Pacific Ocean off the coast of Humboldt County, California.

g. *Filed Pursuant to:* Federal Power Act, 16 U.S.C. 791(a)–825(r).

h. *Applicant Contacts:* Mr. Roy Kuga, Vice President—Energy Supply, Pacific Gas and Electric Company, P.O. Box 770000, MC N13–1360, San Francisco, CA 94177, telephone: (415)–973–3806, and Ms. Annette Faraglia, Esq., Pacific Gas and Electric Company, Law Department, P.O. Box 7442, MC B30A–2479, San Francisco, CA 94120, telephone: (415)–973–7145.

i. *FERC Contact:* Mr. Chris Yeakel, (202)–502–8132.

j. *Deadline for filing motions to intervene, protests and comments:* 60 days from the issuance date of this notice.

All documents (original and eight copies) should be filed with: Kimberly D. Bose, Secretary, Federal Energy Regulatory Commission, 888 First Street, NE., Washington, DC 20426. Comments, protests, and interventions may be filed electronically via the Internet in lieu of paper; see 18 CFR 385.2001(a)(1)(iii) and the instructions on the Commission's Web site under the ''e-Filing'' link. The Commission strongly encourages electronic filings. Please include the project number (P–12779–000) on any comments or motions filed.

The Commission's Rules of Practice and Procedure require all intervenors filing documents with the Commission to serve a copy of that document on each person in the official service list for the project. Further, if an intervenor files comments or documents with the Commission relating to the merits of an issue that may affect the responsibilities of a particular resource agency, they must also serve a copy of the document on that resource agency.

k. *Competing Application:* Project No. 12780–000, Date Filed: February 28, 2007 Notice Issued: April 6, 2007, Due Date: June 5, 2007.

l. *Description of Project:* The proposed project would consist of: (1) 8–200 wave-energy conversion buoys with a generating capacity of 200 kilowatts to 1 megawatt each consisting of; (2) integrated generators; (3) anchoring devices; and (4) interconnection transmission lines. The anticipated annual generation of the project will be approximately 175 gigawatt-hours.

m. *Locations of Application:* A copy of the application is available for inspection and reproduction at the Commission in the Public Reference Room, located at 888 First Street NE., Room 2A, Washington, DC 20426, or by calling (202) 502–8371. This filing may also be viewed on the Commission's Web site at *http://www.ferc.gov* using the ''eLibrary'' link. Enter the docket number excluding the last three digits in the docket number field to access the document. For assistance, call toll-free 1–866–208–3676 or e-mail *FERCOnlineSupport@ferc.gov*. For TTY, call (202) 502–8659. A copy is also available for inspection and reproduction at the address in item h above.

n. Individuals desiring to be included on the Commission's mailing list should so indicate by writing to the Secretary of the Commission.

o. Proposed Scope of Studies under Permit—A preliminary permit, if issued, does not authorize construction. The term of the proposed preliminary permit would be 36 months. The work proposed under the preliminary permit would include economic analysis, preparation of preliminary engineering plans, and a study of environmental impacts. Based on the results of these studies, the Applicant would decide whether to proceed with the preparation of a development application to construct and operate the project.

p. Comments, Protests, or Motions to Intervene—Anyone may submit comments, a protest, or a motion to intervene in accordance with the requirements of Rules of Practice and Procedure, 18 CFR 385.210, .211, .214. In determining the appropriate action to take, the Commission will consider all protests or other comments filed, but only those who file a motion to intervene in accordance with the Commission's Rules may become a party to the proceeding. Any comments, protests, or motions to intervene must be received on or before the specified comment date for the particular application.

q. Filing and Service of Responsive Documents—Any filings must bear in all capital letters the title ''COMMENTS'', ''PROTEST'', or ''MOTION TO INTERVENE'', as applicable, and the Project Number of the particular application to which the filing refers. Any of the above-named documents must be filed by providing the original and the number of copies provided by the Commission's regulations to: The Secretary, Federal Energy Regulatory Commission, 888 First Street, NE., Washington, DC 20426. An additional copy must be sent to Director, Division of Hydropower Administration and Compliance, Federal Energy Regulatory Commission, at the above-mentioned address. A copy of any motion to intervene must also be served upon each representative of the Applicant specified in the particular application.

Comments, protests and interventions may be filed electronically via the Internet in lieu of paper; see 18 CFR 385.2001(a)(1)(iii) and the instructions on the Commission's Web site under the ''e-Filing'' link. The Commission strongly encourages electronic filings.

r. Agency Comments—Federal, State, and local agencies are invited to file comments on the described application. A copy of the application may be obtained by agencies directly from the Applicant. If an agency does not file comments within the time specified for filing comments, it will be presumed to have no comments. One copy of an agency's comments must also be sent to the Applicant's representatives.

Kimberly D. Bose,

Secretary.

[FR Doc. E7–7664 Filed 4–20–07; 8:45 am]

BILLING CODE 6717–01–P

DEPARTMENT OF ENERGY

Federal Energy Regulatory Commission

[Docket No. RM98–1–000]

Records Governing Off-the Record Communications; Public Notice

April 17, 2007.

This constitutes notice, in accordance with 18 CFR 385.2201(b), of the receipt of prohibited and exempt off-the-record communications.

Order No. 607 (64 FR 51222, September 22, 1999) requires Commission decisional employees, who make or receive a prohibited or exempt off-the-record communication relevant to the merits of a contested proceeding, to deliver to the Secretary of the Commission, a copy of the communication, if written, or a summary of the substance of any oral communication.

Prohibited communications are included in a public, non-decisional file associated with, but not a part of, the decisional record of the proceeding. Unless the Commission determines that the prohibited communication and any responses thereto should become a part of the decisional record, the prohibited off-the-record communication will not be considered by the Commission in reaching its decision. Parties to a proceeding may seek the opportunity to respond to any facts or contentions made in a prohibited off-the-record communication, and may request that the Commission place the prohibited communication and responses thereto in the decisional record. The Commission will grant such a request only when it determines that fairness so requires. Any person identified below as having made a prohibited off-the-record communication shall serve the document on all parties listed on the official service list for the applicable proceeding in accordance with Rule 2010, 18 CFR 385.2010.

Exempt off-the-record communications are included in the decisional record of the proceeding, unless the communication was with a cooperating agency as described by 40 CFR 1501.6, made under 18 CFR 385.2201(e)(1)(v).

The following is a list of off-the-record communications recently received by the Secretary of the Commission. The communications listed are grouped by docket numbers in ascending order. These filings are available for review at the Commission in the Public Reference Room or may be viewed on the Commission's Web site at *http://www.ferc.gov* using the eLibrary

link. Enter the docket number, excluding the last three digits, in the docket number field to access the document. For assistance, please contact FERC, Online Support at *FERCOnlineSupport@ferc.gov* or toll free at (866) 208–3676, or for TTY, contact (202) 502–8659.

Docket No.	Date received	Presenter or requester
Prohibited:		
1. P–1494–000	4–12–07	Jim Thompson.
2. P–1494–307	4–16–07	Burl Lane.[1]
Exempt:		
1. CP06–54–000	4–2–07	Hon. Richard Blumenthal.
2. CP07–67–000, PF06–22–000	4–11–07	Robbie Cumberland, Jr.[2]
3. CP06–354–000	3–29–07	Scott Parker.
4. CP06–354–000	4–12–07	Robert Unternaehrer.[3]
5. CP06–365–000	4–2–07	Hon. Ron Wyden.
6. PF07–1–000, PF07–4–000	4–13–07	George M. Moore.
7. PF07–4–000	4–12–07	Karen Gustin.
8. PF07–4–000	4–12–07	Tom Robinson.[4]

[1] E-mail communication.
[2] One of twelve letters from students from Dundalk High School submitted in this docket.
[3] Record of phone call to FERC staff.
[4] One of three pre-filing comment forms and two additional comments that were a part of one fax submittal.

Kimberly D. Bose,

Secretary.

[FR Doc. E7–7661 Filed 4–20–07; 8:45 am]

BILLING CODE 6717–01–P

FEDERAL RESERVE SYSTEM

Change in Bank Control Notices; Acquisition of Shares of Bank or Bank Holding Companies

The notificants listed below have applied under the Change in Bank Control Act (12 U.S.C. 1817(j)) and § 225.41 of the Board's Regulation Y (12 CFR 225.41) to acquire a bank or bank holding company. The factors that are considered in acting on the notices are set forth in paragraph 7 of the Act (12 U.S.C. 1817(j)(7)).

The notices are available for immediate inspection at the Federal Reserve Bank indicated. The notices also will be available for inspection at the office of the Board of Governors. Interested persons may express their views in writing to the Reserve Bank indicated for that notice or to the offices of the Board of Governors. Comments must be received not later than May 8, 2007.

A. Federal Reserve Bank of Dallas (W. Arthur Tribble, Vice President) 2200 North Pearl Street, Dallas, Texas 75201-2272:

1. Harry Lynn and Oksana Williams, Plano, Texas; to acquire additional voting shares of Snook Bancshares, Inc., Snook, Texas, and indirectly acquire additional voting shares of First Bank of Snook, Snook, Texas.

Board of Governors of the Federal Reserve System, April 18, 2007.

Robert deV. Frierson,

Deputy Secretary of the Board.

[FR Doc. E7–7657 Filed 4–20–07; 8:45 am]

BILLING CODE 6210–01–S

FEDERAL RESERVE SYSTEM

Formations of, Acquisitions by, and Mergers of Bank Holding Companies

The companies listed in this notice have applied to the Board for approval, pursuant to the Bank Holding Company Act of 1956 (12 U.S.C. 1841 *et seq.*) (BHC Act), Regulation Y (12 CFR Part 225), and all other applicable statutes and regulations to become a bank holding company and/or to acquire the assets or the ownership of, control of, or the power to vote shares of a bank or bank holding company and all of the banks and nonbanking companies owned by the bank holding company, including the companies listed below.

The applications listed below, as well as other related filings required by the Board, are available for immediate inspection at the Federal Reserve Bank indicated. The application also will be available for inspection at the offices of the Board of Governors. Interested persons may express their views in writing on the standards enumerated in the BHC Act (12 U.S.C. 1842(c)). If the proposal also involves the acquisition of a nonbanking company, the review also includes whether the acquisition of the nonbanking company complies with the standards in section 4 of the BHC Act (12 U.S.C. 1843). Unless otherwise noted, nonbanking activities will be conducted throughout the United States. Additional information on all bank holding companies may be obtained from the National Information Center Web site at *www.ffiec.gov/nic/*.

Unless otherwise noted, comments regarding each of these applications must be received at the Reserve Bank indicated or the offices of the Board of Governors not later than May 18, 2007.

A. Federal Reserve Bank of Chicago (Burl Thornton, Assistant Vice President) 230 South LaSalle Street, Chicago, Illinois 60690-1414:

1. Broadway Bancorp, Inc., Chicago, Illinois; to become a bank holding company by acquiring 100 percent of the voting shares of Broadway Bank, Chicago, Illinois.

2. St. Anne Bancorp, Inc., St. Anne, Illinois; to become a bank holding company by acquiring 100 percent of the voting shares of National Bank of Saint Anne, Saint Anne, Illinois.

B. Federal Reserve Bank of Kansas City (Donna J. Ward, Assistant Vice President) 925 Grand Avenue, Kansas City, Missouri 64198-0001:

1. Young Partners, L.P., and Young Corporation; to indirectly acquire, and Citizens Bancshares Co., all of Chillicothe, Missouri, to directly acquire, additional voting shares for a total of 22.1 percent of the voting shares of First Community Bancshares, Inc., Overland Park, Kansas, and thereby indirectly acquire additional voting shares of First Community Bank, Lee's Summit, Missouri.

Board of Governors of the Federal Reserve System, April 18, 2007.

Robert deV. Frierson,

Deputy Secretary of the Board.

[FR Doc. E7–7656 Filed 4–20–07; 8:45 am]

BILLING CODE 6210–01–S

DEPARTMENT OF HEALTH AND HUMAN SERVICES

Meeting of the National Vaccine Advisory Committee

AGENCY: Department of Health and Human Services, Office of the Secretary.

ACTION: Notice.

SUMMARY: As stipulated by the Federal Advisory Committee Act, the Department of Health and Human Services (DHHS) is hereby giving notice that the National Vaccine Advisory Committee (NVAC) will hold a meeting by conference call. The meeting is open to the public.

DATES: The meeting will be held on May 11, 2007, from 1 p.m. to 2:30 p.m.

ADDRESSES: This meeting will be held by conference call.

FOR FURTHER INFORMATION CONTACT: Ms. Emma English, Program Analyst, National Vaccine Program Office, Department of Health and Human Services, Room 443–H Hubert H. Humphrey Building, 200 Independence Avenue, SW., Washington, DC 20201; (202) 690–5566, *nvpo@hhs.gov.*

SUPPLEMENTARY INFORMATION: Pursuant to Section 2101 of the Public Service Act (42 U.S.C. Section 300aa–1), the Secretary of Health and Human Services was mandated to establish the National Vaccine Program to achieve optimal prevention of human infectious diseases through immunization and to achieve optimal prevention against adverse reactions to vaccines. The NVAC was established to provide advice and make recommendations to the Assistant Secretary for Health, as the Director of the National Vaccine Program, on matters related to the program's responsibilities.

This is a special meeting of the NVAC. Discussions will surround a draft document titled ''The Promise and Challenge of Adolescent Immunization,'' prepared at the request of the Assistant Secretary for Health by the Committee's Adolescent Immunization Working Group. The Committee will review the draft document and the Committee will vote to either endorse the document as an official NVAC report or request that further revisions be made to the document by the Working Group. A copy of this draft document can be found on the World Wide Web (*http://www.hhs.gov/nvpo*) or by contacting the contact person identified above.

For this special meeting, remote participation will be made available via a toll-free call-in phone number. This call-in number can be obtained from the contact person identified above and will be operator assisted to provide members of the public the opportunity to provide comments to the Committees. Members of the public will have the opportunity to provide comments at the meeting. Public comment will be limited to five minutes per speaker. Any members of the public who wish to have printed written comment made available to the Committee members should submit materials to the Executive Secretary, NVAC, through the contact person listed above prior to close of business May 7, 2007. Any written materials submitted by the public that are to be discussed by the Committee will be made available via the World Wide Web (*http://www.hhs.gov/nvpo*) prior to the meeting.

Dated: April 17, 2007.

Raymond Strikas,

Medical Advisor, National Vaccine Program Office.

[FR Doc. E7–7682 Filed 4–20–07; 8:45 am]

BILLING CODE 4150–44–P

DEPARTMENT OF HEALTH AND HUMAN SERVICES

Office of the Assistant Secretary for Preparedness and Response; HHS Public Health Emergency Medical Countermeasures Enterprise Implementation Plan for Chemical, Biological, Radiological and Nuclear Threats

AGENCY: Office of the Assistant Secretary for Preparedness and Response, Department of Health and Human Services

ACTION: Notice.

SUMMARY: The United States faces serious public health threats from the deliberate use of weapons of mass destruction (WMD)—chemical, biological, radiological, or nuclear (CBRN)—by hostile States or terrorists, and from naturally emerging infectious diseases that have a potential to cause illness on a scale that could adversely impact national security. Effective strategies to prevent, mitigate, and treat the consequences of CBRN threats is an integral component of our national security strategy. To that end, the United States must be able to rapidly develop, stockpile, and deploy effective medical countermeasures to protect the American people. The HHS Public Health Emergency Medical Countermeasures Enterprise (PHEMCE) has taken a holistic, end-to-end approach that considers multiple aspects of the medical countermeasures mission including research, development, acquisition, storage, maintenance, deployment, and guidance for utilization. Phase one of this approach established the *HHS PHEMCE Strategy for Chemical, Biological, Radiological, and Nuclear Threats (HHS PHEMCE Strategy).* The HHS PHEMCE Strategy, published in the **Federal Register** on March 20, 2007, described a framework of strategic policy goals and objectives for identifying medical countermeasure requirements and establishing priorities for medical countermeasure evaluation, development and acquisition. These strategic policy goals and objectives were used to establish the Four Pillars upon which this *HHS Public Health Emergency Medical Countermeasures Enterprise Implementation Plan (HHS PHEMCE Implementation Plan)* is based. The *HHS PHEMCE Implementation Plan* considers the full spectrum of medical countermeasures-related activities, including research, development, acquisition, storage/maintenance, deployment, and utilization. The *HHS PHEMCE Implementation Plan* is consistent with the President's *Biodefense for the 21st Century* and is aligned with the National Strategy for *Medical Countermeasures against Weapons of Mass Destruction.*

DATES: This notice is effective as of April 16, 2007.

FOR FURTHER INFORMATION CONTACT: Dr. Susan Coller, Policy Analyst, Office of Public Health Emergency Medical Countermeasures, Office of the Assistant Secretary for Preparedness and Response at 330 Independence Ave., SW., Room G640, Washington, DC 20201 or by phone 202–260–1200.

HHS PHEMCE Approach to Medical Countermeasures

The United States faces serious public health threats from the deliberate use of chemical, biological, radiological, or nuclear (CBRN) threat agents by hostile states or terrorists, and from naturally emerging infectious diseases that have the potential to cause illness on a scale that would impact national security. Within the Federal government, the mission of the Department of Health and Human Services (HHS) is to protect the civilian population by providing leadership in research, development, acquisition, deployment, and guidance for effective use of medical countermeasures for mitigation of CBRN events. This key role was identified in the *National Strategy to Combat Weapons of Mass*

Destruction,[1] *Biodefense for the 21st Century*,[2] and the National Strategy for *Medical Countermeasures against Weapons of Mass Destruction*,[3] which together comprise the national blueprint for addressing CBRN defense.

The HHS Public Health Emergency Medical Countermeasures Enterprise (HHS PHEMCE) leads the mission to develop and acquire medical countermeasures that will improve public health emergency preparedness as well as prevent and mitigate the adverse health consequences associated with CBRN and naturally occurring threats. HHS PHEMCE is a coordinated, intra-agency effort led by the Office of the Assistant Secretary for Preparedness and Response (ASPR) and includes three HHS internal agencies: The Centers for Disease Control and Prevention (CDC), the Food and Drug Administration (FDA), and the National Institutes of Health (NIH). Additionally, HHS PHEMCE collaborates with its *ex officio* members: The Department of Defense (DOD), the Department of Homeland Security (DHS), the Department of Veterans Affairs (VA) and other interagency stakeholders as appropriate.

The *HHS PHEMCE Implementation Plan for CBRN Threats* addresses twelve biological threat agents, a class of chemical threats (volatile nerve agents) and radiological and nuclear threats. The medical countermeasure programs described will involve the full range of activities from research through advanced development, acquisition, storage, maintenance, deployment and utilization and will include all of the PHEMCE. However, the detailed focus of this Plan will be on the acquisition phase using the remaining funds available under Project BioShield, recognizing that significant efforts both upstream and downstream of the acquisition will be required to ensure the successful development, maintenance and utilization of these critical response assets, that may be needed in the event of a public health emergency.

The *HHS PHEMCE Implementation Plan for CBRN Threats* excludes pandemic influenza, which is addressed in the *HHS Pandemic Influenza Plan.* The *HHS Pandemic Influenza Plan* includes an overview of the threat of pandemic influenza, a description of the relationship of the *HHS Pandemic Influenza Plan* to other Federal plans, and an outline of key roles and responsibilities during a pandemic. It is aligned with the *National Strategy for Pandemic Influenza*, issued by President George W. Bush on November 1, 2005, and the *Implementation Plan for the National Strategy for Pandemic Influenza*, which guides the Nation's preparedness and response to an influenza pandemic. Significant progress has been made in the development and acquisition of medical countermeasures for pandemic influenza. Additional detailed information is available at *http://www.pandemicflu.gov.*

Current State of Medical Countermeasure Preparedness

To date, HHS has significantly expanded national medical countermeasure preparedness utilizing significant investments from throughout the HHS PHEMCE, including NIH research and development; CDC Division of the Strategic National Stockpile (DSNS) acquisition, storage, and maintenance of medical countermeasures; and substantive technical and regulatory support provided by FDA to product developers. Funding support by the NIH for basic research, product development, and clinical research of CBRN medical countermeasures has increased dramatically between Fiscal Year 2001 (FY 2001) to FY 2006. Funding for the DSNS has increased more than ten-fold in that same period, providing for the acquisition and stockpiling of medical countermeasures and supplies to protect the American public. Furthermore, the Project BioShield Act of 2004 (Pub. L. 108–276)[4] (Project BioShield) was enacted to accelerate the acquisition and availability of safe and effective medical countermeasures to protect the United States from CBRN threats. Project BioShield created a $5.6 billion Special Reserve Fund (SRF) for use over 10 years (FY 2004–FY 2013) to acquire appropriate medical countermeasures for DSNS.

During its first two years of implementation, Project BioShield acquisitions were guided by requirements derived from interagency deliberations in 2003 that involved Cabinet-level Departments and the Executive Office of the President. Under this initial strategy, HHS pursued acquisitions for those highest priority threats for which there were candidate products at relatively advanced stages of development and for which there were opportunities to have a significant impact on improving preparedness. These products included medical countermeasures for anthrax, smallpox, botulinum toxins, and radiological/nuclear agents—the four threat agents initially determined by DHS to pose a material threat to national security.[5] Acquisitions under Project BioShield to date include the currently licensed anthrax vaccine, anthrax therapeutics (monoclonal and human immune globulin), a pediatric formulation of potassium iodide to protect against absorption of radioactive iodine, calcium and zinc diethylenetriaminepentaacetate (DTPA), chelating agents to treat ingestion of certain radiological particles, and botulinum antitoxin.

Additional acquisitions of medical countermeasures for the DSNS have also provided a substantial preparedness level for a number of material threats. Specifically, DSNS inventory includes smallpox vaccine to immunize every American and Vaccinia Immune Globulin to treat complications that may arise from smallpox vaccination; anthrax therapeutics and a substantial level of antibiotics to provide treatment (thousands of doses) or prophylaxis (millions of doses) for bacterial threat agents anthrax, plague and tularemia; thousands of treatment courses of the chelating agent Prussian Blue (which mitigates internal absorption of cesium-137, a component of dirty bombs); enough potassium iodide tablets (which protects against radioactive iodine) for over one million people; thousands of courses of growth factors that could be useful for addressing the hematopoietic effects of acute radiation syndrome (ARS); CHEMPACKs (pre-positioned antidotes for volatile nerve agent exposure) distributed throughout the country; and general supplies that will be required to treat the complex array of medical problems following a nuclear attack, including antibiotics, anti-nausea drugs, and large quantities of supplies to treat burn and blast injuries. Some of these stockpiled products are licensed, approved, or cleared by FDA for use as medical countermeasures. Others are investigational and would need to be used under an Investigational New Drug application or an Emergency Use Authorization[6]. In 2002, DSNS began participating in the Shelf Life Extension Program (SLEP) with FDA. SLEP allows

[1] *www.whitehouse.gov/news/releases/2002/12/WMDStrategy.pdf.*

[2] *www.whitehouse.gov/homeland/20040430.html.*

[3] *www.whitehouse.gov/news/releases/2007/02/20070207–2.html.*

[4] *http://frwebgate.access.gpo.gov/cgi-bin/getdoc.cgi?dbname=108_cong_public_laws&docid=f:publ276.108.pdf.*

[5] The Project BioShield Annual Report to Congress July 2004–July 2006 is available at *http://www.hhs.gov/aspr/ophemc/bioshield/bioshieldreport/index.html*

[6] See *http://www.FDA.gov* for further information regarding the Investigational New Drug application and the Emergency Use Authorization

the extension of the expiration date of certain drugs in DSNS where adequate supporting data exist, so that critical medical countermeasures that are still safe and effective can continue to be used.

HHS has also acted to improve and strengthen the underlying national response capacity and distribution efficiency that is required to take full advantage of these stockpiled medical countermeasures. HHS has specifically worked to prepare public health systems for bioterrorism and other mass casualty incidents; expand America's public health laboratory capacity, a crucial element in detecting and understanding any disease outbreak; expand and improve communications capacity within the public health structure to make public communications clearer and faster in an emergency; enhance food defense and safety activities at the FDA; expand the biodefense research program at NIH; and address response capacity for at-risk populations including children, pregnant women, senior citizens and other individuals who have special needs in the event of a public health emergency, as determined by the Secretary.[7]

Development of the HHS PHEMCE Implementation Plan For Chemical, Biological, Radiological and Nuclear Threats

HHS approached the development of the *HHS PHEMCE Implementation Plan* recognizing that the past investments outlined above have resulted in an armamentarium of medical countermeasures in DSNS that provides a substantial preparedness level for a number of CBRN threats. HHS recognizes that while it was important to achieve the current level of preparedness, it is equally as important to maintain and improve this capability.

HHS PHEMCE has taken a holistic, end-to-end approach that considers multiple aspects of the medical countermeasures mission including research, development, acquisition, storage, maintenance, deployment, and guidance for utilization. Phase One of this approach established the *HHS Public Health Emergency Medical Countermeasures Enterprise Strategy for Chemical Biological, Radiological and Nuclear Threats (HHS PHEMCE Strategy*).[8] The September 2006 BioShield Stakeholders Workshop brought together stakeholders from all aspects of the mission to discuss the framework and approach for the *HHS PHEMCE Strategy.* The valuable input solicited from stakeholders at the Workshop, combined with the responses received to the medical countermeasures Request for Information issued in October 2006[9] and through the **Federal Register**, was incorporated into the *HHS PHEMCE Strategy.*

The HHS PHEMCE Strategy, published in the **Federal Register** on March 20, 2007, described a framework of strategic policy goals and objectives for identifying medical countermeasure requirements and establishing priorities for medical countermeasure evaluation, development and acquisition. These strategic policy goals and objectives were used to establish the Four Pillars upon which this *HHS PHEMCE Implementation Plan* is based.

Pillar One: Identify and Assess CBRN Threats

DHS leads the Federal response to National Response Plan incidents, conducts integrated assessments of the risks posed by CBRN agents, and issues Material Threat Determinations (MTDs) as to which CBRN pose a material threat sufficient to affect U.S. national security.[10] The Secretary of Homeland Security has issued MTDs for threat agents (Table 1) and has conducted Population Threat Assessments (PTA) to estimate the number of individuals who might be exposed to each of these threats in plausible, high-consequence scenarios. A Population Threat Assessment has been conducted for volatile nerve agents.

In the future, additional MTDs may be issued if technology advances or if our understanding of the potential threats changes. The PHEMCE strategy is to have specific medical countermeasures that address each of the threats for which an MTD has been issued while also providing broad spectrum medical countermeasures to address as many as is practicable of those threats that did not rise to the level of an MTD.

Table 1. Material Threat Determinations (MTDs) and Population Threat Assessment (PTAs) issued to date by the Department of Homeland Security

Bacillus anthracis (ANTHRAX)	Marburg virus (HEMORRHAGIC FEVER)
Botulinum toxins (BOTULISM)	Multi-drug resistant *Bacillus anthracis* (MDR ANTHRAX)
Burkholderia mallei (GLANDERS)	Radiological/Nuclear agents
Burkholderia pseudomallei (MELIODOSIS)	*Rickettsia prowazekii* (TYPHUS)
Ebola virus (HEMORRHAGIC FEVER)	Variola virus (SMALLPOX)
Franciscella tularensis (TULAREMIA)	Volatile nerve agents [PTA only]
Junin virus (HEMORRHAGIC FEVER)	*Yersinia pestis* (PLAGUE)

Pillar Two: Assess Medical/Public Health Consequences

The information supporting the MTDs and PTAs regarding population exposures from high consequence scenarios provided by DHS is used by HHS to inform subsequent medical and public health consequence assessments using multiple sources of information, including modeling. HHS uses modeling to help to explore potential outcomes when medical countermeasures are employed in operationally realistic timelines. The HHS assessments provide public health impact estimates for a given threat scenario and use of medical countermeasures for each threat agent.

[7] As defined in the Pandemic and All-Hazards Preparedness Act (P.L.109–417), which is available at *http://frwebgate.access.gpo.gov/cgi-bin/getdoc.cgi?dbname=109_cong_public_laws&docid=f:publ417.109.pdf.*

[8] Available at *http://frwebgate.access.gpo.gov/cgi-bin/getdoc.cgi?dbname=2007_register&docid=%5bDOCID:fr20mr07–65.*

[9] *http://www.fbo.gov/servlet/Docments/R/589030.*

[10] Material Threat Determinations are authorized under section 319 F–2(c)(2) of the Public Health Service Act, as added by section 3 of the Project BioShield Act and are a legally required precursor to procurements under that authority.

Pillar Three: Establish Medical Countermeasure Requirements That Incorporate Assessments of Current Levels of Preparedness, Concepts of Utilization, and Product Specifications

Our current state of preparedness and medical countermeasure requirements have been assessed for these fourteen CBRN threats. To establish medical countermeasure requirements for the top priority threat agents, HHS combines the threat prioritization and medical and public health consequence assessments, along with subject matter expert evaluations, domestic and international intelligence information, and information on current State, local and tribal response capabilities.

Pillar Four: Identify and Prioritize Near-, Mid-, and Long-Term Development and Acquisition Programs, Informed by Assessment of the Maturity of the Product Development Pipeline and Estimated Costs

The mission to develop and acquire agent-specific medical countermeasures for the entire U.S. population for all fourteen threats and broad spectrum medical countermeasures against the remaining current and future threats encompasses a vast range of activities and dictates priority-setting. The process for setting the priorities for the portfolio of investments ultimately outlined in this plan required careful consideration and deliberation. Specifically, HHS PHEMCE evaluated three possible approaches during the priority setting process. The first option was to focus only on a single, highest priority threat. In line with this, all available acquisition dollars would be spent trying to fully address the requirements for this one agent with the aim of eliminating it as a material threat to national security. The second option was to divide the available resources equally among the known fourteen threats. The third option, and the approach that the PHEMCE ultimately pursued, was to prioritize strategic policy decisions, framed by the *HHS PHEMCE Strategy*, which will most effectively improve overall public health preparedness. This decision-making process to set priorities included extensive discussion with Federal government subject matter experts [11] and was guided by the principles of the National Strategy for *Medical Countermeasures against Weapons of Mass Destruction.* As a result, HHS has prioritized the medical countermeasures programs—including, research, development, and acquisition in the near-term, mid-term and long-term—that were determined to provide the greatest opportunities to improve public health emergency preparedness across the threat spectrum.

The key elements that established the foundation for the priority-setting decisions were as follows:

Prevention Versus Mitigation and Treatment

HHS has generally adopted a strategy of developing and acquiring medical countermeasures for post-event response to CBRN threats. Preventive measures are appropriate only for threats of such potential catastrophic consequence that a pre-event strategy will be examined in order to reduce vulnerability and mitigate post-event consequences. Therapeutics and diagnostics or the use of post-event prophylaxis will be the preferred strategy for all other threats. Priority will be placed on medical countermeasures that focus on post-event prophylaxis or post-exposure treatment.

Concept of Operations

In alignment with the National Strategy for *Medical Countermeasures against Weapons of Mass Destruction*, HHS will prioritize the development and acquisition of medical countermeasures that are associated with an effective concept of operations (CONOPs). These CONOPs include a deployment strategy and utilization policy that is supportable by the present and future programmed distribution capabilities of Federal, State, local, and tribal public health emergency responders to rapidly ship and distribute critical items following a CBRN event. Within HHS, ASPR coordinates with the CDC Coordinating Office for Terrorism Preparedness and Emergency Response (COPTER) in determining processes, procedures, tactics, and techniques for how DSNS deploys countermeasures [12] and the utilization strategies for those materials and medical countermeasures. ASPR's Office of Preparedness and Emergency Operations (OPEO) works with its response partners, using event and response modeling, to outline how the current DSNS inventory will be used. These approaches are exercised with interagency partners to ensure that the plans are based on realistic and achievable timelines.

[11] Including subject matter experts from HHS (CDC, FDA, and NIH), DOD, DHS, VA, and the respective HHS PHEMCE Chemical, Biologics, Radiological and Nuclear Working Groups.

[12] The authority of the Secretary of HHS to deploy the SNS is codified at 42 U.S.C. § 247d–6b.

The CONOPs for a particular threat scenario and medical countermeasure are a crucial component in setting specific product requirements and contribute directly to the acquisition strategy. While there is much in common in medical countermeasure development for civilian and military medical countermeasures, CONOPs for HHS and DOD, respectively, have differences which must be considered in the requirements and acquisitions processes. HHS is committed to continuing to work with all its emergency responder partners to improve public health response capabilities.

Broad Spectrum Medical Countermeasures and Platform Technologies

A fixed defense [13] or ''one-bug, one-drug'' approach for medical countermeasure development is determined to be effective and viable for some of the highest priority threats such as smallpox and anthrax. As the list of material threats increases, and technology advances, HHS will be focusing its medical countermeasure research, development and acquisition efforts on broad spectrum and platform approaches.

Preparing for New Threats

In order to address emerging, enhanced, and advanced threats,[14] HHS will be investing in research and development on innovative approaches and platform technologies.[15] These technologies will facilitate rapid identification and characterization of novel threat agents, thereby creating the capability to rapidly produce relevant medical countermeasures. This policy is aligned with the National Strategy for *Medical Countermeasures against Weapons of Mass Destruction* which targets the use of existing, proven approaches for developing medical countermeasures to address challenges posed by traditional CBRN agents while calling for a flexible capability to develop new medical countermeasures. These latter activities emphasize the need to capitalize upon the development of innovative and future technologies that will enhance our ability to respond swiftly and effectively to potential, emerging, and future unknown CBRN threats. This will require targeted, balanced, and sustained investments to support fundamental basic research to discover new technologies and update platforms as well as applied research for technology development to deliver new medical capabilities and countermeasures.

Top Priority Medical Countermeasure Research, Development, and Acquisition Programs to Increase Public Health Emergency Preparedness

Following the principles and processes described above, HHS has assessed the top priority CBRN threats from a medical countermeasure perspective and has developed medical countermeasure acquisition priorities for the near-term (FY 2007–FY 2008), the mid-term (FY 2009–FY 2013), and, in less detail, the long-term (beyond FY 2013).[16] This prioritization spans the CBRN threat spectrum and best utilizes available resources in addressing the highest priority threats to maximize risk mitigation. Table 2 arrays the top priority medical countermeasure programs against the specific threat agents addressed by the program. The broad spectrum antibiotic, broad spectrum antiviral, and diagnostics programs address multiple threat agents, while other programs are, of necessity, agent-specific.

Medical countermeasure requirements are based primarily on the number of persons exposed to clinically significant levels of a threat agent in a single-event, plausible, high-consequence scenario. In setting appropriate targets for an acquisition program, a number of factors in addition to the single event, exposure-based medical countermeasure requirement could be considered, including:

- Multiple events
- Citizens concerned about exposure [17]
- The lack of availability of rapid, point-of-care diagnostics
- Potential nationwide demand after a single large-scale event
- Pre-positioning of individual medical countermeasures to meet specific response time requirements
- Economies of scale for production [18]
- Providing a target acquisition size sufficient to drive industrial development of the medical countermeasure.

HHS will continue to coordinate medical countermeasure development and acquisition efforts with DOD; however, separate development and acquisition programs may be necessary in situations where military requirements differ from civilian requirements, including with regard to concepts of use of particular countermeasures. Consistent with the National Strategy for *Medical Countermeasures against Weapons of Mass Destruction*, the Secretary of Health and Human Services is tasked with civilian medical countermeasure preparedness, and it is National policy that ''the Secretary of Defense shall retain the exclusive responsibility for research, development and acquisition of medical countermeasures to prevent or mitigate the health effects of WMD threats * * * to the Armed Forces.'' [19]

BILLING CODE 4150–37–P

[13] Relman DA. Bioterrorism—Preparing to Fight the Next War, NEJM, 2006, 354(2):113–115. In the context of defense against biological threats, a fixed defense is a medical countermeasure intended for use against a specific organism and not useful in scenarios that employ a different organism.

[14] As defined in the National Strategy for *Medical Countermeasures against Weapons of Mass Destruction:* Enhanced Agents are traditional agents that have been modified or selected to enhance their ability to harm human populations or circumvent current countermeasures, such as a bacterium that has been modified to resist antibiotic treatment; Emerging Agents are previously unrecognized pathogens that might be naturally occurring and present a serious risk to human populations, such as the virus responsible for Severe Acute Respiratory Syndrome (SARS); and Advanced Agents are novel pathogens or other materials of biological nature that have been artificially engineered in the laboratory to bypass traditional countermeasures or produce a more severe or otherwise enhanced spectrum of disease.

[15] Examples of platform technologies include strategies that permit rapid commercial scale production of threat-specific countermeasures or expression systems that permit rapid production of new vaccines.

[16] SRF that supports Project BioShield released $3.4 billion for use between FY 2004–2008 and the remaining $2.2 billion will be available for use between FY 2009–2013.

[17] Non-exposed population seeking medical care for non-specific symptoms or concerns about exposure.

[18] A production process in which an increase in the number of units produced causes a decrease in the average cost of each unit.

[19] *www.whitehouse.gov/ news/releases/2007/ 02/ 20070207-2.html.*

Table 2. CBRN Threats and Projected Future Top Priority Medical Countermeasure Programs

TOP PRIORITY CBRN THREATS (LISTED ALPHABETICALLY)	PROJECTED FUTURE TOP PRIORITY MEDICAL COUNTERMEASURE (MCM) PROGRAMS												
	Anthrax antitoxin(s)	Anthrax vaccine	ARS/DEARE MCM(s)	Biodosimetry, Bioassay	Broad spectrum antibiotic(s)	Broad spectrum antiviral(s)	Diagnostics	Enterprise CHEMPACKs	Filovirus MCM(s)	Radionuclide-specific agent(s)	Smallpox antiviral(s)	Smallpox vaccine	Volatile nerve agent single antidote
Bacillus anthracis ANTHRAX / Multi-drug resistant *Bacillus anthracis* MDR ANTHRAX	✦	✦			✦		✦						
Botulinum toxins BOTULISM							✦						
Burkholderia mallei GLANDERS / *Burkholderia pseudomallei* MELIOIDOSIS					✦		✦						
Filoviruses (Ebola and Marburg) HEMORRHAGIC FEVER						✦	✦		✦				
Francisella tularensis TULAREMIA					✦		✦						
Junin virus ARGENTINE HEMORRHAGIC FEVER						✦	✦						
Radiological/nuclear agents			✦	✦						✦			
Rickettsia prowazekii TYPHUS					✦		✦						
Variola virus SMALLPOX						✦	✦				✦	✦	
Volatile nerve agents								✦					✦
Yersinia pestis PLAGUE					✦		✦						

Strategies for Addressing High Priority Medical Countermeasures

Research and Development

NIH is the lead agency within the Federal Government for conducting and supporting biomedical research relating to causes, diagnosis, treatment, control, and prevention of diseases. NIH will align research and development efforts with the PHEMCE priority medical countermeasure programs. In addition, NIH will support Research and Development for next-generation products to replace currently-held medical countermeasures in DSNS, as needed. These next generation products include medical countermeasures with broad spectrum activity against a wide variety of threat agents; broad spectrum technologies that enhance effectiveness of multiple classes of medical countermeasures; and broad spectrum platforms that permit more rapid generation of required medical countermeasures. Continued research and development efforts will ensure a sustainable, continuous stream of promising medical countermeasures in the pipeline that are aligned with top priority HHS PHEMCE requirements for future acquisitions and/or replacement of DSNS inventory. NIH's long-term focus is on platform technologies and broad spectrum medical countermeasures that will allow for the rapid introduction of additional response capabilities for emerging infectious agents.

Advanced Development [20]

The use of advanced development efforts that support multiple candidates for each medical countermeasure need is a key element to mitigating risk in the Project BioShield acquisition phase of the product development pathway. The Pandemic and All-Hazards Preparedness Act (Pub. L. 109–417) established the Biomedical Advanced Research and Development Authority (BARDA). Utilizing those tools, HHS plans to promote innovation, reduce risk to both medical countermeasure developers and the Government, and invest in medical countermeasure advanced development that will carry products through the crucial middle phase [21] of drug development between basic research and acquisition of final products. HHS anticipates that available funding through these authorities, in FY 2007 and beyond, will be aligned with the highest priority medical countermeasure development programs. Finally, Advanced Development activities will depend on congressional approval of the President's FY 2008 budget request of $189 million. The future funding levels for BARDA remain to be determined.

Projected Acquisitions

The HHS PHEMCE will consider opportunities for acquiring medical countermeasures using both DSNS appropriations as well as SRF monies under Project BioShield. Acquisitions under DSNS will be limited to commercially available products. Current funding levels were considered in projecting acquisition forecasts. While BARDA funding has been established to support the advanced development of medical countermeasures, Project BioShield acquisition contracts may still include late-stage development costs for scale-up manufacturing, clinical trials, and pivotal animal efficacy studies, in addition to final production and delivery.

The near-term is defined as FY 2007–FY 2008, which is the time frame of allocation of approximately half of the Project BioShield SRF. The mid-term is defined as FY 2009–FY 2013, which is the remainder of the ten year duration of the Special Reserve Fund. Medical countermeasures will be procured in the near-term and mid-term using both the SRF as well as from the DSNS appropriations. During the near-term, HHS also will pursue acquiring a number of medical countermeasures for which utilization of the Project BioShield Special Reserve Fund has been approved, but for which funds have not yet been fully obligated.

Table 3 summarizes the proposed near-term and mid-term acquisitions for the priority medical countermeasures. In some cases, the estimated funding ranges indicated are based on identified potential medical countermeasure candidates currently under development; whereas in other cases the estimated ranges are based on industry standard information for vaccine and drug development costs. Descriptions of the acquisitions for priority medical countermeasures follow Table 3.

[20] The Pandemic and All-Hazards Preparedness Act (Pub. L. 109–417) definition of advanced research and development: ''with respect to a product that is or may become a qualified countermeasure or a qualified pandemic or epidemic product, activities that predominantly are conducted after basic research and preclinical development of the product; and are related to manufacturing the product on a commercial scale and in a form that satisfies the regulatory requirements under the Federal Food, Drug, and Cosmetic Act or under section 351 of this Act.''

[21] Often referred to as the ''Valley of Death.''

Table 3. Proposed Near-Term and Mid-Term Acquisitions for High Priority Medical Countermeasures to Address CBRN Threat Agents

BIOLOGICAL THREATS	Near-Term (FY 2007-08)		Mid-Term (FY 2009-13)	
	Funding Source	Funding Level[1]	Funding Source	Funding Level[1, 2]
Diagnostics			SRF	X
Broad spectrum antibiotic(s)	DSNS	X	DSNS, SRF	X, XX
Anthrax antitoxin(s)			SRF	XX
Anthrax vaccine(s)	SRF	XX		
Medical Countermeasure(s) for Filoviruses			SRF	XX
Smallpox antiviral(s)			SRF	X
Smallpox vaccine	SRF	XX		
RADIOLOGICAL and NUCLEAR THREATS	**Near-Term (FY 2007-08)**		**Mid-Term (FY 2009-13)**	
	Funding Source	Funding Level[1]	Funding Source	Funding Level[1,2]
Medical Countermeasure(s) for ARS/DEARE	SRF	XX	SRF	XX
Biodosimetry, Bioassay			SRF‡	X
Radionuclide-specific agent(s)			SRF	X
CHEMICAL THREATS	**Near-Term (FY 2007-08)**		**Mid-Term (FY 2009-13)**	
	Funding Source	Funding Level[1]	Funding Source	Funding Level[1,2]
Enterprise CHEMPACKs			DSNS	XX

KEY

DSNS Anticipated to be funded through the CDC Division of the Strategic National Stockpile budget, pending availability of funds.

SRF Anticipated Project BioShield Special Reserve Fund acquisition with remaining available funds.

SRF‡ While the diagnostics portion of this requirement may be funded through the Project BioShield Special Reserve Fund, appropriate funding to establish the network of biodosimetry and radionuclide bioassay laboratories is yet to be determined.

X Currently estimated to be less than or equal to $100 million[3]

XX Currently estimated to be greater than $100 million[3]

[1] Funding is cumulative within the time period indicated.

[2] Uncertainties in funding support throughout the pipeline in the mid-term preclude making more definitive projections.

[3] These estimates are not final. Funding levels are subject to change.

PROJECTED NEAR-TERM (FY 2007–FY 2008)

Medical Countermeasure Development and Acquisition Programs To Enhance Preparedness

Programs for Biological Threats

Broad Spectrum Antibiotic(s)

MTD: *Bacillus anthracis and multi-drug resistant bacillus anthracis, burkholderia mallei, burkholderia pseudomallei, franciscella tularensis, rickettsia prowazekii, yersinia pestis.*

Many of MTDs address bacterial species that can be treated using antibiotics. Broad spectrum antibiotics, therefore, will continue to be a critical component of strategy HHS will take to maintain and improve public health preparedness. For each biological threat agent or class of agents, however, there is a limited array of antibiotics with demonstrated efficacy. In the near-term, HHS will continually evaluate the antibiotics in the DSNS and, as needed, will acquire commercially available antibiotics using DSNS appropriations.

Anthrax Vaccine(s)

MTD: *Bacillus anthracis, multi-drug resistant bacillus anthracis.*

Antibiotics represent the first line of defense to protect the nation following an anthrax attack. However, anthrax vaccines are also an essential element of our national preparedness. Vaccines may be given as post-exposure prophylaxis in combination with antibiotics to potentially provide longer-term protection; this combination may also allow for a reduction in the duration of the antibiotic regimen. Vaccines can also provide pre-event protection to the relatively small population that is at high risk of frequent occupational exposure to *Bacillus anthracis.*

In December 2006, a contract for the development and acquisition of a recombinant Protective Antigen (rPA) anthrax vaccine was terminated by HHS; however, the Department remains committed to acquiring next-generation anthrax vaccines that will be part of a balanced and diversified portfolio of medical countermeasures. HHS has developed a comprehensive strategy for advanced development and acquisition of current and next generation anthrax vaccines and anticipates that these activities will be pursued in the near-term.

Smallpox Vaccine(s)

MTD: *Variola virus.*

HHS has made significant progress in providing smallpox vaccine to the DSNS. In addition, a requirement has been established for a smallpox vaccine to protect immunocompromised persons for whom use of the existing smallpox vaccines is medically contraindicated in the absence of smallpox exposure.

One candidate next-generation smallpox vaccine, modified vaccinia Ankara (MVA), is based on a strain of the vaccinia virus that, in contrast to current smallpox vaccines such as Dryvax, does not replicate effectively in human cells and, therefore, may cause fewer side effects. The MVA development programs were supported by the National Institute of Allergy and Infectious Diseases (NIAID) with milestone-driven contract awards in 2003 and 2004. HHS is well-advanced in the pre-award stage of an MVA vaccine acquisition program.

Programs for Radiological and Nuclear Threats

ARS/Hematopoietic Syndrome Medical Countermeasure(s)

MTD: *Radiological/nuclear agents.*

HHS regards radiological and nuclear agents as a significant threat to national security and is committed to purchasing safe and efficacious medical countermeasures to treat Acute Radiation Syndrome (ARS). In March 2007, HHS withdrew the ARS RFP because it was determined, after extensive scientific and technical expert evaluation, that no competing offeror had a product that met USG requirements for a Project BioShield acquisition. HHS will continue to pursue an initial acquisition of a safe and effective medical countermeasure to treat ARS. In moving forward to meet this goal, HHS will make use of scientific developments that have occurred since the previous RFP closed, as well as new authorities provided by the Pandemic and All-Hazards Preparedness Act that could accelerate the advanced development of promising countermeasures.

HHS supports further development of the radiological and nuclear medical countermeasure pipeline. The NIAID's Radiation Countermeasures Research Program has funded numerous projects, including: ARS medical countermeasure screening programs in cell-based and rodent models at multiple institutions around the country; development of three Good Laboratory Practices (GLP) animal testing facilities to evaluate the efficacy of medical countermeasures against ARS; eight Centers for Medical Countermeasures against Radiation at academic institutions around the country; and intramural research programs at the DOD Armed Forces Radiobiology Research Institute (AFRRI) and the National Cancer Institute.

PROJECTED MID-TERM (FY 2009–FY 2013)

Medical Countermeasure Development and Acquisition Programs To Enhance Preparedness

HHS will pursue the following medical countermeasure acquisitions in the mid-term using the remaining SRF and pending availability of other funding for those acquisitions that do not use the SRF. These anticipated acquisitions are also predicated on the availability of products at the appropriate developmental stage that meet U.S. Government civilian requirements.

Programs for Biological Threats

The ideal medical countermeasures for biological agents will be highly effective for post-exposure prophylaxis as well as early symptomatic treatment, will display an excellent safety profile and could be easily self-administered.

Broad Spectrum Antibiotic(s)

MTD: *Bacillus anthracis, multi-drug resistant bacillus anthracis. burkholderia mallei, burkholderia pseudomallei, francisella tularensis, rickettsia prowazekii, yersinia pestis.*

In addition to the near-term strategy for acquisition of commercially available antibiotics, HHS anticipates maintaining a robust basic research and development program along with advanced development for broad spectrum antimicrobials that will specifically provide support for regulatory approval for clinical indications that address bacterial agent MTDs. In order to better balance antimicrobial DSNS holdings in light of newer MTDs, HHS will pursue a potential acquisition of additional broad spectrum antimicrobials in the mid-term.

Diagnostics (Point-of-Care)

MTD: *All biological threat agents.*

Following a terrorist event, clinical diagnostic assays (*in vitro* diagnostics, IVDs) are critical tools for distinguishing infected (symptomatic) individuals needing treatment from potentially exposed but asymptomatic individuals needing post-exposure prophylaxis. Overall, the requirements for diagnostic assays to facilitate a response to a bioterrorism event will focus on rapid, point-of-care assays. Rapid triaging of the symptomatic patients will be required to provide, as necessary, treatment, isolation and implementation of universal precautions for infectious diseases and may also be useful in the

allocation of limited critical therapeutic materials to only those patients in need. Multiplexed, adaptive platforms that confer flexibility, offer alternative commercial opportunities, and allow for the rapid introduction of additional tests for emerging infectious agents are highly desired.

These IVDs used for clinical purposes are distinguished from detection assays used for environmental samples (air, water, food, surface swabs) in that they are required to be approved or cleared by the FDA. To date, limited incentives have been available to sustain commercial market production of IVDs; however, once specific requirements in this area are developed and prioritized, HHS will pursue a potential mid-term acquisition of biological agent diagnostics to enhance public health preparedness capability.

Anthrax Antitoxin

MTD: *Bacillus anthracis, multi-drug resistant bacillus anthracis.*

The primary mortality and morbidity of anthrax disease is mediated through toxins produced by the bacteria, B. *anthracis.* Antibiotics (currently within DSNS) target the B. *anthracis* bacteria itself; while vaccines (discussed under Near-Term Acquisitions) provide long-term protection from disease. Antitoxins are required to neutralize the effects of the toxins and may contribute to a more successful therapeutic outcome. Given the current status of anthrax antitoxins and animal model development, HHS will continue its phased acquisition program and will pursue a mid-term acquisition of additional anthrax antitoxin to allow HHS to more fully meet medical countermeasure requirements, including to address the threat from MDR anthrax.

Filovirus Medical Countermeasure(s)

MTD: *Ebola virus, marburg virus.*

Infection with filoviruses produces an aggressive disease that is highly lethal. Currently, no FDA-approved filovirus-specific medical countermeasures exist. An antiviral is preferred to treat infected patients and to provide pre-exposure prophylaxis to health care workers and personal contacts. A vaccine will be useful for civilian populations if it provides rapid onset of protective immunity. HHS will continue to invest in research and development and will pursue an acquisition for filovirus medical countermeasures in the mid-term.

Smallpox Antiviral

MTD: *Variola virus.*

Currently there is no treatment available for smallpox disease once the symptoms manifest. An effective antiviral treatment could mitigate the effects of smallpox disease. It is likely that such an antiviral may also be effective against other pox viruses. Given the current status of the most advanced products as well as the status of animal model development, HHS will pursue a mid-term acquisition of a smallpox antiviral for the treatment of smallpox. The ideal antiviral will be highly effective post-exposure as well as an effective treatment early in the symptomatic phase of the disease.

Programs for Radiological and Nuclear Threats

ARS/DEARE Medical Countermeasure(s)

MTD: *Radiological/nuclear agents.*

Acute Radiation Syndrome (ARS) often called radiation sickness, results when humans are exposed to a large dose of ionizing radiation. ARS develops in the timeframe of hours to weeks, and the Delayed Effects of Acute Radiation Exposure (DEARE) injury in weeks to months following radiation exposure. HHS will pursue one or more ARS/DEARE medical countermeasure acquisition(s) in the mid-term to continue the phased acquisition strategy launched in the near-term.

Biodosimetry and Bioassay

MTD: *Radiological/nuclear agents.*

Biodosimetry and radionuclide bioassay capabilities are essential for medical management of ARS/DEARE following acute radiation exposure and are integral to triage and management processes. HHS anticipates that rapid biodosimetry assays for on-scene triage should be available for acquisition in the mid-term. A system of biodosimetry and radionuclide bioassay laboratories is also proposed to increase overall national capacity. While the diagnostics portion of this requirement may be funded through the Project BioShield SRF, appropriate funding to establish this laboratory network is yet to be determined.

Radionuclide-Specific Medical Countermeasure(s)

MTD: *Radiological/nuclear agents.*

Radionuclide-specific medical countermeasures are a key component to managing the medical consequences of radiation dispersal device (RDD) events, both explosive and non-explosive, as well as nuclear power plant events. In the near term, HHS will continue to fund the development of improved formulations of diethylenetriaminepentaacetate (DTPA) and other novel decorporating agents that remove radioactive particles from the body. If continued progress is made on the radionuclide-specific countermeasures currently under development, it is conceivable that oral formulations of DTPA (which would considerably ease the logistical requirements for rapid delivery of this medical countermeasure) and/or other novel decorporating agents could be available for acquisition in the mid-term.

Programs for Chemical Threats

Enterprise CHEMPACKs

PTA: *Volatile nerve agents.*

The CHEMPACK program is an ongoing initiative of the DSNS, begun in 2003, that provides antidotes (three countermeasures used concomitantly) to volatile nerve agents for pre-positioning by State, local, and/or tribal officials throughout the U.S. In its current form, the program will receive continued funding in the near-term for procurement and fielding of additional CHEMPACKs, replacement of expired product, and administrative support. The proposed Enterprise CHEMPACK program would build upon the existing system, improving it by adding an education, training and exercise component and by optimizing the pre-positioning of antidotes. In the near-term, HHS will begin performing the operations analysis that is prerequisite to such improvements. It is anticipated that acquisition of some next-generation replacement products and the implementation of changes to improve the program could occur in the mid-term, pending availability of DSNS funds.

PROJECTED LONG-TERM (BEYOND FY 2013)

Medical Countermeasure Development and Acquisition Programs To Enhance Preparedness

Program for Biological Threats

Broad Spectrum Antiviral(s)

MTD: *Ebola Virus, Junin Virus, Marburg Virus, Variola Virus.*

Three families of viruses are represented among the existing MTDs: *Poxviridae* (variola virus), *Filoviridae* (Ebola and Marburg viruses), and *Arenaviridae* (Junin virus). These different viral families have diverse biological and pathological characteristics and cause unique diseases in humans. All of these viruses can be disseminated via aerosolization, a feature which enhances their potential use as bioterrorism agents. There are no approved antiviral drugs available for either post-exposure prophylaxis or for

therapeutic use for any of these viral diseases. Overall, the development of broad spectrum medical countermeasures that can address several threat agents would maximize the efficiency and flexibility of the DSNS, thereby reducing storage and maintenance costs. HHS will prioritize research and development funding in this area in the near- and mid-terms. Due to its relative immaturity in the development pipeline, it is unlikely that a broad spectrum antiviral will be acquisition-ready until after FY 2013.

Program for Chemical Threats

Volatile Nerve Agent Single Antidote

PTA: *Volatile Nerve Agents.*

The optimal medical defense against volatile nerve agents would be a single, rapidly effective countermeasure that could be used, for example, via intranasal or inhaled routes and by untrained persons at risk or by first responders dealing with large numbers of exposed individuals. HHS will continue research and development funding in this area in the near- and mid-terms. Given the current immature status of the development pipeline, a single antidote for volatile nerve agents would likely not be available for acquisition until the long-term timeframe.

Conclusion

This *HHS PHEMCE Implementation Plan* identifies top priorities for medical countermeasure research, development and acquisition programs that HHS has determined, in collaboration with interagency partners, to have the greatest potential to improve public health emergency preparedness. It is anticipated that this plan will be reviewed at least biennially to encompass potential changes in assessments of the threat, consequences (particularly with regard to the evolution of CONOPs), and maturity of the medical countermeasure development pipeline.

The prioritization of medical countermeasure programs described in this *HHS PHEMCE Implementation Plan* represents the current thinking of HHS informed by material threat determinations, population threat assessments, or the assessments of medical and public health consequences. DHS is conducting an integrated CBRN threat assessment, to be completed in June 2008 that will further inform the next version of the *HHS PHEMCE Implementation Plan.* Additionally, future versions are anticipated to incorporate more detailed assessments of potential multipliers of medical countermeasure requirements, based on the potential for enhanced, emerging, or advanced biological agents, multiple and simultaneous CBRN events and other factors informed by scientific and threat analysis. As State, local, and tribal medical countermeasure delivery capabilities and event response planning evolve, they will also open new flexibilities with respect to the types of medical countermeasures that can be incorporated into Federal planning efforts, and will influence HHS assessments of potential medical and public health consequences following CBRN events.

The development and acquisition strategies to most effectively improve preparedness resulted from critical evaluation of the status of medical countermeasure development pipelines. HHS recognizes that developing, acquiring, and utilizing medical countermeasures to prepare for and respond to CBRN events requires significant resources and unprecedented cooperation among many stakeholders, including Federal counterparts outside HHS; private industry (domestic and international); State, local and tribal governments; first responders and healthcare workers; academia; and the public. HHS will build upon its 2006 RFI for medical countermeasures against CBRN threats, including the technology readiness levels (TRLs) defined in that RFI, to continue to explore new, more efficient ways to reach out to the academic and medical countermeasure development communities to ensure that future versions of the *HHS PHEMCE Implementation Plan* are informed by the latest breakthroughs in the field.

In addition, while this *HHS PHEMCE Implementation Plan* focuses on the further enhancement of public health emergency preparedness, HHS is simultaneously evaluating the costs and benefits associated with the mid- and long-term maintenance of existing and projected stockpiles of medical countermeasures. HHS anticipates that such an evaluation will be detailed in a future version of the *HHS PHEMCE Implementation Plan.*

Finally, Advanced Development activities will depend upon congressional approval of the President's FY 2008 budget request and will increase the chance of programmatic success. Through the Pandemic and All-Hazards Preparedness Act, HHS now has the authority to promote innovation, increase the potential for success for both medical countermeasure developers and the Government, and invest in medical countermeasure advanced development that will carry products across the so-called ''Valley of Death'' to meet medical countermeasure requirements. It is anticipated that future versions of the *HHS PHEMCE Implementation Plan* will more fully incorporate implementation of these authorities and funding levels that may be appropriated in support of the robust advanced development programs that are critical to mission success.

The prioritization of medical countermeasures to improve public health preparedness reflected in *this HHS PHEMCE Implementation Plan* was an interagency process led by HHS and involving significant collaboration with DHS, DOD, VA, and others. The *HHS PHEMCE Implementation Plan* has also benefited tremendously from the information provided by Stakeholders, particularly at the BioShield Stakeholders Workshop held in September 2006, and from the many formal comments received in response to the **Federal Register** notice of the draft *HHS PHEMCE Strategy.* Notice of the issuance of this *HHS PHEMCE Implementation Plan* will be posted in the **Federal Register** and HHS welcomes comments from stakeholders.

The *HHS PHEMCE Implementation Plan* will be a feature of the upcoming HHS Public Health Emergency Medical Countermeasures Enterprise Stakeholders Workshop to be held in Washington, DC, July 31—August 2, 2007. HHS is committed to improving transparency and continuing to find the most appropriate venues to work with stakeholders who are likewise committed to meeting the goals of this critical mission of preparing the nation for the adverse health consequences of public health emergencies.

Improving preparedness will be an ongoing process as science advances, innovations mature, and the threat scope changes. HHS resources beyond the SRF, when it ends in FY 2013, will continue to be strategically invested in programs throughout the medical countermeasure development and acquisition pipeline to achieve this goal. It is anticipated that targets for the timeframe beyond FY 2013 will be articulated with increasing clarity and granularity with each successive revision of the *HHS PHEMCE Implementation Plan.*

Finally, to successfully execute the program objectives outlined in the *HHS PHEMCE Implementation Plan for Chemical, Biological, Radiological and Nuclear Threats*, ASPR will strengthen and build upon its achievements to develop, recruit, and support a world-class workforce. To realize this goal, ASPR will intensify its efforts to attract

and expedite hiring of qualified candidates; focus and align training, education, and career development; recognize staff accomplishments; and foster learning and growth with improved knowledge management.

Dated: April 17, 2007.

Gerald Parker,

Principal Deputy Assistant Secretary, Office of the Assistant Secretary for Preparedness and Response, Department of Health and Human Services.

[FR Doc. 07–1983 Filed 4–18–07; 12:17 pm]

BILLING CODE 4150–37–C

DEPARTMENT OF HEALTH AND HUMAN SERVICES

Centers for Disease Control and Prevention

[30Day–07–0217]

Agency Forms Undergoing Paperwork Reduction Act Review

The Centers for Disease Control and Prevention (CDC) publishes a list of information collection requests under review by the Office of Management and Budget (OMB) in compliance with the Paperwork Reduction Act (44 U.S.C. Chapter 35). To request a copy of these requests, call the CDC Reports Clearance Officer at (404) 639–5960 or send an e-mail to *omb@cdc.gov.* Send written comments to CDC Desk Officer, Office of Management and Budget, Washington, DC or by fax to (202) 395–6974. Written comments should be received within 30 days of this notice.

Proposed Project

Vital Statistics Training Application, OMB No. 0920–0217–Extension-National Center for Health Statistics (NCHS), Centers for Disease Control and Prevention (CDC).

Background and Brief Description

In the United States, legal authority for the registration of vital events, *i.e.*, births, deaths, marriages, divorces, fetal deaths, and induced terminations of pregnancy, resides individually with the States (as well as cities in the case of New York City and Washington, DC) and Puerto Rico, the Virgin Islands, Guam, American Samoa, and the Commonwealth of the Northern Mariana Islands. These governmental entities are the full legal proprietors of vital records and the information contained therein. As a result of this State authority, the collection of registration-based vital statistics at the national level, referred to as the U.S. National Vital Statistics System (NVSS), depends on a cooperative relationship between the States and the Federal government. This data collection, authorized by 42 U.S.C. 242k, has been carried out by NCHS since it was created in 1960.

NCHS assists in achieving the comparability needed for combining data from all States into national statistics, by conducting a training program for State and local vital statistics staff to assist in developing expertise in all aspects of vital registration and vital statistics. The training offered under this program includes courses for registration staff, statisticians, and coding specialists, all designed to bring about a high degree of uniformity and quality in the data provided by the States. This training program is authorized by 42 U.S.C. 242b, section 304(a). In order to offer the types of training that would be most useful to vital registration staff members, NCHS requests information from State and local vital registration officials about their projected needs for training. NCHS also asks individual candidates for training to submit an application form containing name, address, occupation, work experience, education, and previous training. These data enable NCHS to determine those individuals whose needs can best be met through the available training resources. NCHS is requesting 3 years of OMB clearance for this project. There is no cost to respondents in providing these data other than their time. The total estimated annualized burden hours are 44.

ESTIMATED ANNUALIZED BURDEN HOURS

Respondents	Number of respondents	Number of responses per respondent	Average burden per response (in hours)
State, local, and Territory Registration Officials	57	1	20/60
Training applicants	100	1	15/60

Dated: April 17, 2007.

Maryam Daneshvar,

Acting Reports Clearance Officer, Centers for Disease Control and Prevention.

[FR Doc. E7–7648 Filed 4–20–07; 8:45 am]

BILLING CODE 4163–18–P

DEPARTMENT OF HEALTH AND HUMAN SERVICES

Centers for Disease Control and Prevention

[60Day–07–06AO]

Proposed Data Collections Submitted for Public Comment and Recommendations

In compliance with the requirement of Section 3506(c)(2)(A) of the Paperwork Reduction Act of 1995 for opportunity for public comment on proposed data collection projects, the Centers for Disease Control and Prevention (CDC) will publish periodic summaries of proposed projects. To request more information on the proposed projects or to obtain a copy of the data collection plans and instruments, call 404–639–5960 and send comments to Joan Karr, CDC Acting Reports Clearance Officer, 1600 Clifton Road, MS–D74, Atlanta, GA 30333 or send an e-mail to *omb@cdc.gov.*

Comments are invited on: (a) Whether the proposed collection of information is necessary for the proper performance of the functions of the agency, including whether the information shall have practical utility; (b) the accuracy of the agency's estimate of the burden of the proposed collection of information; (c) ways to enhance the quality, utility, and clarity of the information to be collected; and (d) ways to minimize the burden of the collection of information on respondents, including through the use of automated collection techniques or other forms of information technology. Written comments should be received within 60 days of this notice.

Proposed Project

Evaluation of an Occupational Safety and Health Program for the Small Business Wood Pallet Industry, National Institute for Occupational Safety and Health (NIOSH), Centers for Disease Control and Prevention (CDC).

Background and Brief Description

The Federal Occupational Safety and Health Act of 1970, section 501, enables NIOSH to carry out research relevant to the health and safety of workers. The goal of this project is to determine whether receipt of a NIOSH informational manual about OSH concerns specific to pallet manufacturing and recycling will motivate owners or managers to take actions resulting in a safer workplace. The theoretical basis of the study follows the Transtheoretical Model (TTM) of Prochaska and DiClemente (1984). This model states that change is defined by 5 stages: (1) *Pre-contemplation*—people are unaware of problems and are not thinking seriously about changing within the next 6 months (2) *contemplation*—the stage where people become aware that a problem exists and intend to take action within the next 6 months (3) *preparation*—investigating options and intending to take action in the next 30 days (4) *action*—people institute environmental changes and change their overt behavior and (5) *maintenance*—people continue the gains obtained during the action stage for longer than 6 months.

Small business entrepreneurship is a vital component of the U.S. economy. Occupational safety and health activities including research, regulation, enforcement, and intervention historically have not focused on small businesses despite their predominance and relatively large numbers of employees overall. Few small business establishments provide on-site occupational health units, medical screening tests, pre-placement physicals, or employ, or use, industrial hygiene or safety personnel/consultants. As a consequence, prevention of occupational injury and illness is often difficult in small business establishments because they generally have few safety and health resources, do not hire staff devoted to safety and health activities, and often lack the ability to identify occupational hazards and conduct surveillance.

The pallet manufacturing industry has higher injury rates than general industry. The incidence rate for non-fatal injuries in the wood pallet and skid (SIC 2448) manufacturing industry was 226% greater than that for general industry. The type of injuries sustained at wood pallet manufacturers and their rates of increase (2002) compared to general industry included amputations (2220% higher), cuts and punctures (378% higher), fractures (237% higher), bruises (221% higher) sprains and strains (133% higher) and back pain (305% higher).

Through this study, NIOSH will evaluate the feasibility and effectiveness of providing carefully constructed OSH information to one segment of small business pallet makers. The informational manual will be divided into eight chapters targeting specific hazards relevant to pallet work and will provide the owners/managers with suggestions for controlling those hazards. Chapters were selected based on prior NIOSH site visits to a sample of pallet makers and in consultation with the National Wood Pallet and Container Association. The chapters include: An introduction to OSH, developing a site specific safety program, controlling noise, improving ventilation, saw safety, forklift safety, preventing build up of carbon monoxide, and prevention of musculoskeletal injury through ergonomics.

This project will utilize two groups, a treatment group and a control group, in a pre-post design. 180 pallet companies will be randomly selected and assigned to six groups from a list of small pallet businesses in the United States that was provided by a market research firm. Both groups will participate in a baseline survey conducted by telephone. The treatment group will then receive the NIOSH informational manual by mail and the control group will not receive the manual until the conclusion of the study. Five months after the mailing, both groups will participate in a follow-up telephone survey designed to assess whether receipt and use of the material encouraged owners/managers to contemplate, plan, or initiate OSH changes at their facility. The questionnaire will determine whether owners/managers have progressed from baseline along the stage of change continuum because of receipt and use of the NIOSH material, or if some other factor is influencing their safety and health actions. It is possible that improvements in OSH may occur due to other influences and not from the informational manual. For example, it is possible that some event will occur that will make the entire industry more aware of occupational safety and health. Use of a similar control group will help in this determination.

While the entire NIOSH study, including approvals, development and review of the materials effectiveness will occur over a three-year period, data collection will occur within a one-year period. There will be no cost to respondents except their time to participate in the telephone survey.

ESTIMATED ANNUALIZED BURDEN HOURS

Type of respondents	Form name	Number of respondents	Number of responses per respondent	Average burden per response (in hours)	Total burden (in hours)
Pallet company safety and health managers; Treatment Group.	Initial Questionnaire (incomplete)	17	1	3/60	1
	Initial Questionnaire (complete)	95	1	12/60	19
	Follow-up Questionnaire	90	1	15/60	23
Pallet company safety and health managers; Control Group.	Initial Questionnaire (incomplete)	17	1	3/60	8
	Initial Questionnaire (complete)	95	1	12/60	19
	Follow-up Questionnaire*	90	1	9/60	14
Total					84

Dated: April 17, 2007.

Joan F. Karr,

Acting Reports Clearance Officer, Centers for Disease Control and Prevention.

[FR Doc. E7–7650 Filed 4–20–07; 8:45 am]

BILLING CODE 4163–18–P

DEPARTMENT OF HEALTH AND HUMAN SERVICES

Centers for Disease Control and Prevention

[30Day–07–05CO]

Agency Forms Undergoing Paperwork Reduction Act Review

The Centers for Disease Control and Prevention (CDC) publishes a list of information collection requests under review by the Office of Management and Budget (OMB) in compliance with the Paperwork Reduction Act (44 U.S.C. Chapter 35). To request a copy of these requests, call the CDC Reports Clearance Officer at (404) 639–5960 or send an e-mail to omb@cdc.gov. Send written comments to CDC Desk Officer, Office of Management and Budget, Washington, DC or by fax to (202) 395–6974. Written comments should be received within 30 days of this notice.

Proposed Project

Evaluation of the Centers for Disease Control and Prevention's Consumer Response Services Center (CDC–INFO) Evaluation-New-National Center for Health Marketing (NCHM), Centers for Disease Control and Prevention (CDC).

Background and Brief Description

CDC is launching an integrated ''one face to the public'' approach across all communication channels to handle inquiries concerning a broad spectrum of public health topics. The overall objective is to ensure consistent, timely, reliable health information for dissemination to a variety of consumers (public, health professionals, researchers, etc.) and to address variations in inquiry volumes related to public health emergencies, news events, and dynamic, shifting public health priorities. The CDC has integrated over 40 hotlines into one Consumer Response Services Center–CDC–INFO. CDC–INFO has an exceptionally wide scope because content currently divided between over 40 hotlines handling nearly 2,000,000 telephone contacts annually will be consolidated under CDC–INFO. All CDC hotlines were consolidated in one center beginning in February 2005, with all CDC program areas transitioning into CDC–INFO through a phased approach during the next three years. CDC–INFO itself will be operational for at least the next seven years.

The primary objectives of the national evaluation are to (1) Proactively evaluate customer interactions and service effectiveness by employing assessment measures and data collection mechanisms to support performance management, gathering insights and understandings for improving service levels, and implementing effective measures to meet customer satisfaction goals; (2) develop an ongoing understanding of customer requirements and satisfaction trends to achieve best of practice quality standards and to provide qualitative assessments, quantitative data, and cost factors to drive improvement and reinforce operational objectives; (3) measure CDC–INFO contractor service performance to assist in determining whether performance incentives have been achieved; and (4) to collect data in order to address public concern and response to emergencies, outbreaks, and media events.

Sample size, respondent burden, and intrusiveness have been minimized to be consistent with national evaluation objectives. Procedures will be employed to safeguard the privacy and confidentiality of participants. Pilot tests assisted in controlling burden and ensuring the user-relevance of questions. The following table shows the estimated annualized burden for data collection. There is no cost to the respondent, other than the amount of time required to respond to the survey. The total estimated annualized burden hours are 176,578.

Note: This is a corrected 30-day FRN replacing the previous one published February 15, 2007.

ESTIMATE OF ANNUALIZED BURDEN HOURS

Data collection instrument	Number of respondents	Number of responses / respondent	Average burden/response (in hrs)	Total burden (in hours)
Satisfaction survey (callers)	25,000	1	3/60	1,250
Satisfaction survey (e-mail inquiries)	330	1	3/60	17
Follow up survey	3,125	1	7/60	365
Key informant survey	100	1	7/60	140
Postcard survey for bulk mailing	950	1	1/60	16
Postcard survey for individual publications	2,100	1	1/60	35
Web survey for e-mail publication orders	1,000	1	1/60	17
Web survey for internet publications	950	1	1/60	16
Special event/Outreach survey—General Public	25,600	1	5/60	2,133
Special event/Outreach survey—Professionals	10,400	1	5/60	867
Emergency response survey—Level 1 emergency—General Public	31,151	1	5/60	2,763
Emergency response survey—Level 1 emergency—Professionals	7,459	1	5/60	622
Emergency response survey—Level 2 emergency—General Public	57,579	1	5/60	4798
Emergency response survey—Level 2 emergency—Professionals	51,821	1	5/60	4318
Emergency response survey—Level 3 emergency—General Public	351,863	1	5/60	29,322
Emergency response survey—Level 3 emergency—Professional	316,678	1	5/60	26,390
Emergency response survey—Level 4 emergency—General Public	645,630	1	5/60	53,803
Emergency response survey—Level 4 emergency—Professional	596,504	1	5/60	49,709

Dated: April 17, 2007.

Joan F. Karr,

Acting Reports Clearance Officer, Centers for Disease Control and Prevention.

[FR Doc. E7–7651 Filed 4–20–07; 8:45 am]

BILLING CODE 4163–18–P

DEPARTMENT OF HEALTH AND HUMAN SERVICES

Food and Drug Administration

Antiviral Drugs Advisory Committee; Amendment of Notice

AGENCY: Food and Drug Administration, HHS.

ACTION: Notice.

The Food and Drug Administration (FDA) is announcing an amendment to the notice of meeting of the Antiviral Drugs Advisory Committee. This meeting was announced in the **Federal Register** of February 2, 2007 (72 FR 5724). The amendment is being made to reflect a change in the *Location* portion of the document. There are no other changes.

FOR FURTHER INFORMATION CONTACT: Cicely Reese, Center for Drug Evaluation and Research (HFD–21), Food and Drug Administration, 5600 Fishers Lane (for express delivery, 5630 Fishers Lane, rm. 1093) Rockville, MD 20857, 301–827–7001, FAX: 301–827–6776, e-mail: *Cicely.reese@fda.hhs.gov*, or FDA Advisory Committee Information Line, 1–800–741–8138 (301–443–0572 in the Washington DC area), code 3014512531. Please call the Information Line for up-to-date information on this meeting.

SUPPLEMENTARY INFORMATION: In the **Federal Register** of February 7, 2007, FDA announced that a meeting of the Antiviral Drugs Advisory Committee would be held on April 24, 2007. On page 5724, in the first column, the *Location* portion of document is amended to read as follows:

Location: Crowne Plaza Hotel, Kennedy Ballrooms, 8777 Georgia Ave., Silver Spring, MD. The hotel telephone number is 800–971–4654.

This notice is issued under the Federal Advisory Committee Act (5 U.S.C. app. 2) and 21 CFR part 14, relating to advisory committees.

Dated: April 18, 2007.

Randall W. Lutter,

Associate Commissioner for Policy and Planning.

[FR Doc. 07–2001 Filed 4–18–07; 2:52 pm]

BILLING CODE 4160–01–S

DEPARTMENT OF HOMELAND SECURITY

Name Change From the Bureau of Immigration and Customs Enforcement to U.S. Immigration and Customs Enforcement, and the Bureau of Customs and Border Protection to U.S. Customs and Border Protection

AGENCY: Office of the Secretary, DHS.

ACTION: Notice.

SUMMARY: This Notice informs the public that the Department of Homeland Security (DHS) has changed the name of the Bureau of Immigration and Customs Enforcement to U.S. Immigration and Customs Enforcement (ICE), and the name of the Bureau of Customs and Border Protection to U.S. Customs and Border Protection (CBP).

EFFECTIVE DATES: This Notice is effective March 31, 2007.

FOR FURTHER INFORMATION CONTACT: For CBP: Harold M. Singer, Director for the Regulations and Disclosure Law Division, Office of International Trade (202) 572–8700; for ICE:

SUPPLEMENTARY INFORMATION: The Department of Homeland Security (DHS) was established on January 24, 2003, pursuant to the Homeland Security Act of 2002, Public Law 107–296 (HSA). DHS is the result of the reorganization of 22 federal agencies, including the former Immigration and Naturalization Service (INS) from the Department of Justice and the U.S. Customs Service (Customs Service) from the Department of the Treasury. Pursuant to sections 442 and 542 of the HSA, INS and the Customs Service were transferred to DHS effective March 1, 2003, and reorganized to become the U.S. Citizenship and Immigration Services (USCIS), the Bureau of Immigration and Customs Enforcement (ICE), and the Bureau of Customs and Border Protection (CBP).

DHS has decided to change the name of these components from the Bureau of Immigration and Customs Enforcement to U.S. Immigration and Customs Enforcement (ICE), and the Bureau of Customs and Border Protection to U.S. Customs and Border Protection (CBP). Pursuant to section 872(a)(2) of the HSA (6 U.S.C. 452(a)(2)), DHS is required to provide notice of the name change to Congress no later than 60 days before the change will be effective. DHS notified Congress on January 18, 2007.

This Notice informs the public that all official documents and future regulatory actions involving the Bureau of Immigration and Customs Enforcement now will identify U.S. Immigration and Customs Enforcement (ICE) as the applicable DHS component, and all references to the Bureau of Customs and Border Protection in existing documents and actions henceforth shall be construed as references to U.S. Customs and Border Protection (CBP).

Dated: April 17, 2007.

Mary Kate Whalen,

Deputy Associate General Counsel for Regulatory Affairs, Office of the General Counsel.

[FR Doc. E7–7659 Filed 4–20–07; 8:45 am]

BILLING CODE 4410–10–P

DEPARTMENT OF THE INTERIOR

Fish and Wildlife Service

Proposed Information Collection; OMB Control Number 1018-0092; Federal Fish and Wildlife License/Permit Applications, Law Enforcement

AGENCY: Fish and Wildlife Service, Interior.

ACTION: Notice; request for comments.

SUMMARY: We (Fish and Wildlife Service) will ask the Office of Management and Budget (OMB) to approve the information collection (IC) described below. As required by the Paperwork Reduction Act of 1995 and as part of our continuing efforts to reduce paperwork and respondent burden, we invite the general public and other Federal agencies to take this opportunity to comment on this IC, which is scheduled to expire on September 30, 2007. We may not conduct or sponsor and a person is not required to respond to a collection of information unless it displays a currently valid OMB control number.

DATES: You must submit comments on or before June 22, 2007.

ADDRESSES: Send your comments on the IC to Hope Grey, Information Collection Clearance Officer, Fish and Wildlife Service, MS 222–ARLSQ, 4401 North Fairfax Drive, Arlington, VA 22203 (mail); *hope_grey@fws.gov* (e-mail); or (703) 358–2269 (fax).

FOR FURTHER INFORMATION CONTACT: To request additional information about this IC, contact Hope Grey by mail, fax, or e-mail (see **ADDRESSES**) or by telephone at (703) 358–2482.

SUPPLEMENTARY INFORMATION:

I. Abstract

The Endangered Species Act (ESA) (16 U.S.C. 1531 *et seq.*) makes it unlawful to import or export fish, wildlife, or plants without obtaining prior permission as deemed necessary for enforcing the ESA or upholding the Convention on International Trade in

Endangered Species (CITES) (see 16 U.S.C. 1538(e)).

This IC includes the following permit/license application forms:

(1) FWS Form 3-200-2 (Designated Port Exception Permit). Under 50 CFR 14.11, it is unlawful to import or export wildlife or wildlife products at ports other than those designated in 50 CFR 14.12 unless you qualify for an exception. These exceptions allow qualified individuals, businesses, or scientific organizations to import or export wildlife or wildlife products at a nondesignated port:

(a) When the wildlife or wildlife products will be used as scientific specimens.

(b) To minimize deterioration or loss.

(c) To relieve economic hardship.

To request an import or export of wildlife or wildlife products at nondesignated ports, applicants must complete FWS Form 3-200-2. Designated port exception permits are valid for 2 years.

(2) FWS Form 3-200-3 (Import/Export License). It is unlawful to import or export wildlife or wildlife products for commercial purposes without first obtaining an import/export license (50 CFR 14.91). Applicants must complete FWS Form 3-200-3 to request this license. We use the information that we collect on the application as an enforcement tool and management aid to: (a) Monitor the international wildlife market and (b) detect trends and changes in the commercial trade of wildlife and wildlife products. Import/export licenses are valid for 1 year.

We require import/export licensees to maintain records that accurately describe each importation or exportation of wildlife or wildlife products made under the license, and any additional sale or transfer of the wildlife or wildlife products. In addition, licensees must make these records and the corresponding inventory of wildlife or wildlife products available for our inspection at reasonable times, subject to applicable limitations of law. We believe the burden associated with these recordkeeping requirements is minimal because the records already exist. Importers and exporters must complete FWS Form 3-177 (Declaration for Importation or Exportation of Fish or Wildlife) for all imports or exports of wildlife or wildlife products. This form provides an accurate description of the imports and exports. OMB has approved the information collection for FWS Form 3-177 and assigned OMB Control Number 1018-0012, which expires January 31, 2010. Normal business practices should produce records (*e.g.*, invoices or bills of sale) needed to document additional sales or transfers of the wildlife or wildlife products.

II. Data

OMB Control Number: 1018-0092.

Title: Federal Fish and Wildlife License/Permit Applications, Law Enforcement.

Service Form Number(s): 3-200-2 and 3-200-3.

Type of Request: Revision of currently approved collection.

Affected Public: Individuals, businesses, and scientific institutions.

Respondent's Obligation: Required to obtain or retain a benefit.

Frequency of Collection: On occasion.

Estimated Annual Nonhour Burden: $1,567,300 for fees associated with permit applications.

Activity	Number of annual respondents	Number of annual responses	Completion time per response	Annual burden hours
3-200-2 – Application for Designated Port Exception Permit	1,173	1,173	1 hour	1,173
3-200-3 – Application for Import/Export License	14,500	14,500	1 hour	14,500
3-200-3 – Recordkeeping	*14,500	*14,500	15 minutes	3,625
Totals	15,673	15,673		19,298

**Not included in total because the respondents for the recordkeeping requirement are the same as those for the application.*

III. Request for Comments

We invite comments concerning this IC on:

(1) whether or not the collection of information is necessary, including whether or not the information will have practical utility;

(2) the accuracy of our estimate of the burden for this collection of information;

(3) ways to enhance the quality, utility, and clarity of the information to be collected; and

(4) ways to minimize the burden of the collection of information on respondents.

Comments that you submit in response to this notice are a matter of public record. We will include and/or summarize each comment in our request to OMB to approve this IC. Before including your address, phone number, e-mail address, or other personal identifying information in your comment, you should be aware that your entire comment, including your personal identifying information, may be made publicly available at any time. While you can ask us in your comment to withhold your personal identifying information from public review, we cannot guarantee that we will be able to do so.

Dated: March 23, 2007

Hope Grey,

Information Collection Clearance Officer, Fish and Wildlife Service.

FR Doc. E7–7592 Filed 4–20–07; 8:45 am

BILLING CODE 4310–55–S

DEPARTMENT OF THE INTERIOR

Fish and Wildlife Service

Final Comprehensive Conservation Plan (CCP), Wilderness Stewardship Plan (WSP) and Environmental Impact Statement (EIS) for Cabeza Prieta National Wildlife Refuge (Refuge), Ajo, AZ

AGENCY: Fish and Wildlife Service, Department of the Interior.

ACTION: Notice of availability.

SUMMARY: The U.S. Fish and Wildlife Service (Service) announces that the Final CCP is available for the Cabeza Prieta National Wildlife Refuge (Refuge). This CCP is prepared pursuant to the National Wildlife Refuge System Administration Act of 1966, as amended by the National Wildlife Refuge System Improvement Act of 1997, the National Environmental Policy Act of 1969, and the Wilderness Act of 1964. The CCP describes how the Service intends to manage this Refuge over the next 15 years.

DATES: A Record of Decision may be signed no sooner than 30 days after publication of this notice (40 CFR 1506.10(b)(2)).

ADDRESSES: Copies of the CCP are available on compact disk or in hard copy, and can be obtained by writing: U.S. Fish and Wildlife Service, John Slown, Division of Planning, P.O. Box 1306, Albuquerque, New Mexico 87103.

FOR FURTHER INFORMATION CONTACT: Roger DiRosa, Refuge Manager, Cabeza Prieta National Wildlife Refuge, 1611 North Second Street, Ajo, Arizona 85321; 520–387–4993 or John Slown (See **ADDRESSES**), telephone: 505–248–7458; or e-mail to *john_slown@fws.gov*.

SUPPLEMENTARY INFORMATION: The Cabeza Prieta National Wildlife Refuge is located in Pima and Yuma Counties in southwestern Arizona. This 860,010 acre Refuge is comprised of several northwest to southeast trending mountain ranges separated by broad alluvial valleys. Located in the heart of the Sonoran Desert, the Refuge's habitats support a diversity of desert wildlife.

Cabeza Prieta National Wildlife Refuge was withdrawn from the public domain by Executive Order 8038 in 1939, and set apart ''* * * for the conservation and development of natural wildlife resources, and for the protection and improvement of public grazing lands and natural forage resources * * * Provided, however, that all the forage resources in excess of that required to maintain a balanced wildlife population within this range or preserve should be available for livestock.'' When the last grazing leases on the Refuge expired in 1981 the grazing purpose of the Refuge was no longer valid. The Arizona Desert Wilderness Act of 1990 designated 803,418 acres of the Refuge, or approximately 93 percent of the Refuge area, as federal wilderness.

The National Wildlife Refuge System Administration Act of 1966, as amended by the National Wildlife Refuge System Improvement Act of 1997 (16 U.S.C. 668dd–668ee *et seq.*), requires the Service to develop a CCP for each National Wildlife Refuge. The purpose of developing CCPs is to provide refuge managers with a 15-year strategy for achieving refuge purposes and contributing toward the mission of the National Wildlife Refuge System, consistent with sound principles of fish and wildlife science, conservation, legal mandates, and Service policies. In addition to outlining broad management direction on conserving wildlife and their habitats, the CCPs identify wildlife-dependent recreational opportunities available to the public, including opportunities for hunting, fishing, wildlife observation and photography, and environmental education and interpretation. These CCPs will be reviewed and updated at least every 15 years in accordance with the National Wildlife Refuge System Administration Act of 1966, as amended by the National Wildlife Refuge System Improvement Act of 1997.

The availability of Cabeza Prieta National Wildlife Refuge's Draft CCP, WSP and EIS for public review and comment was announced in the **Federal Register** on March 16, 2005 (70 FR 12895–12896), the comment period closed on August 15, 2005. The Draft CCP, WSP and EIS propose and evaluate five management alternatives for the Refuge. All management alternatives implement recovery actions for the Endangered Sonoran pronghorn. The alternatives differ primarily in the level of active management intervention proposed to support the desert bighorn sheep. The first alternative is ''no action'' or continuance of current Refuge management. Under this alternative, the Refuge would continue to offer a limited desert bighorn sheep hunt each year in cooperation with the Arizona Game and Fish Department. Refuge staff would continue to maintain and supply supplemental water to existing developed waters in desert bighorn sheep habitat. The second alternative focuses on limiting management interventions within Refuge wilderness. Under this alternative, developed wildlife waters in sheep habitat within the Refuge wilderness would not be maintained or supplied with supplemental water. The desert bighorn sheep hunt would also be discontinued. The third alternative includes limited management intervention in wilderness. Under this alternative, the Refuge would supply supplemental water to developed waters in sheep habitat within Refuge wilderness only during periods of severe drought. The desert bighorn sheep hunt would be continued, but no hunting would be allowed during years of severe drought. The fourth alternative, identified as the Service's preferred alternative, would allow continued maintenance and water supply to existing developed waters in sheep habitat within Refuge wilderness and would include projects to increase the water collection efficiency of such waters. The Refuge desert bighorn sheep hunt program would continue unchanged under this alternative. The fifth alternative would include the maximum management intervention within Refuge wilderness. Under this alternative all existing developed waters in Refuge wilderness would be maintained and supplied with water, and new developed waters would be created. The desert bighorn sheep hunt program would continue unchanged under this alternative.

Dated: August 3, 2006.

Larry G. Bell,

Acting Regional Director, U.S. Fish and Wildlife Service, Albuquerque, New Mexico.

This document was received at the Office of the **Federal Register** on April 18, 2007.

[FR Doc. E7–7643 Filed 4–20–07; 8:45 am]

BILLING CODE 4310–55–P

DEPARTMENT OF THE INTERIOR

Fish and Wildlife Service

Notice of Availability of Final Comprehensive Conservation Plan (CCP) for Salt Plains National Wildlife Refuge, Jet, OK

AGENCY: Fish and Wildlife Service, Department of the Interior.

ACTION: Notice of availability.

SUMMARY: The U.S. Fish and Wildlife Service (Service) announces that the Final CCP is available for Salt Plains National Wildlife Refuge (Refuge). This CCP was prepared pursuant to the National Wildlife Refuge System Administration Act of 1966, as amended by the National Wildlife Refuge System Improvement Act of 1997, and the National Environmental Policy Act of 1969. Goals and objectives in the CCP describe how the Service intends to manage the Refuge over the next 15 years.

ADDRESSES: Copies of the CCP are available on compact disk or in hard copy, and can be obtained by writing: Chris Perez, Natural Resource Planner, U.S. Fish and Wildlife Service, Route 2, Box 202A, Alamo, Texas 78516. The CCP may also be available for viewing or downloaded online at: *http://www.fws.gov/southwest/refuges/plan/index.html.*

FOR FURTHER INFORMATION CONTACT: Jon M. Brock, Refuge Manager, Salt Plains National Wildlife Refuge, Route 1, P.O. Box 76, Jet, Oklahoma 73749: telephone: 580–626–4794; or Chris Perez (See **ADDRESSES**), telephone: 956–784–7553; e-mail: *chris_perez@fws.gov*.

SUPPLEMENTARY INFORMATION: The Salt Plains National Wildlife Refuge is located on the Salt Fork of the Arkansas River at the Great Salt Plains Lake in north-central Oklahoma. This 32,028 acre refuge is roughly equal parts of upland, open water, and salt flats at the

confluence of several streams and rivers making it one of the most important migratory bird stopover, wintering, and nesting habitats in the Central Great Plains region. Three federally listed species use the Refuge on a seasonal basis. Federally endangered whooping cranes use the Refuge as a key migratory stopover and feeding area and the Refuge is designated critical habitat for the crane (43 FR 20938, May 15, 1978). Least terns nest in large numbers every year on the salt flats and threatened bald eagles winter on the Refuge. It was originally established on March 26, 1930 by Executive Order No. 5314 ''* * * as a refuge and breeding grounds for birds.''

The National Wildlife Refuge System Administration Act of 1966, as amended by the National Wildlife Refuge System Improvement Act of 1997 (16 U.S.C. 668dd–668ee *et seq.*), requires the Service to develop a CCP for each national wildlife refuge. The purpose of developing CCPs is to provide refuge managers with a 15-year strategy for achieving refuge purposes and contributing toward the mission of the National Wildlife Refuge System, consistent with sound principles of fish and wildlife science, conservation, legal mandates, and Service policies. In addition to outlining broad management direction on conserving wildlife and their habitats, the CCPs identify wildlife-dependent recreational opportunities available to the public, including opportunities for hunting, fishing, wildlife observation and photography, and environmental education and interpretation. These CCPs will be reviewed and updated at least every 15 years in accordance with the National Wildlife Refuge System Administration Act of 1966, as amended by the National Wildlife Refuge System Improvement Act of 1997, and the National Environmental Policy Act of 1969.

The availability of the Draft CCP and Environmental Assessment (EA) for a 60-day public review and comment period was announced in the **Federal Register** on November 21, 2005 (70 FR 70089). The Draft CCP/EA identified and evaluated three alternatives for managing the Refuge for the next 15 years. Alternative A, the No Action Alternative, would have continued current management of the Refuge. Alterative B, the Preferred Alternative, emphasized an updated and integrated approach to protecting, maintaining, and restoring native habitats for migratory birds, waterfowl, federally listed species, and resident wildlife. The public use program would be improved by providing increased opportunities for public uses, environmental education, and interpretation. This alternative also called for expanding partnership opportunities to help accomplish the vision and goals of the Refuge. Alternative C proposed to provide a greater emphasis on expanding public uses such as all types of hunting, hiking, and necessary facilities such as additional roads and trails for optimal access. Based on this assessment and comments received, the Preferred Alternative (Alternative B) was selected for implementation. This alternative was selected because it best meets the purposes and goals of the Refuge, as well as the goals of the National Wildlife Refuge System. Management of the Refuge for the next 15 years will focus on encouraging ecological integrity, restoring habitats such as native prairie, controlling invasive plant species, protecting federally listed species such as the whooping crane, least tern, and bald eagle, and enhancing habitat for grassland birds, waterfowl, and other resident wildlife. Opportunities for wildlife-dependent activities such as hunting, fishing, wildlife observation, photography, environmental education, and interpretation will be enhanced. Partnerships with county, State, and Federal agencies, private landowners, and conservation groups will also enable the refuge to achieve its goals and objectives, minimize costs, and bridge relationships with other stakeholder.

Dated: August 3, 2006.

Larry G. Bell,

Acting Regional Director, U.S. Fish and Wildlife Service, Albuquerque, New Mexico.

This document was received at the Office of the **Federal Register** on April 18, 2007.

[FR Doc. E7–7635 Filed 4–20–07; 8:45 am]

BILLING CODE 4310–55–P

DEPARTMENT OF THE INTERIOR

Fish and Wildlife Service

Endangered and Threatened Wildlife and Plants; 5-Year Reviews of 24 Southwestern Species

AGENCY: Fish and Wildlife Service, Interior.

ACTION: Notice of reviews.

SUMMARY: The U.S. Fish and Wildlife Service (Service) announces 5-year reviews of 24 southwestern species listed under the Endangered Species Act of 1973 (Act). The purpose of reviews conducted under this section of the Act is to ensure that the classification of species as threatened or endangered on the List of Endangered and Threatened Wildlife and Plants is accurate. The 5-year review is an assessment of the best scientific and commercial data available at the time of the review.

DATES: To allow adequate time to conduct this review, information submitted for our consideration must be received on or before July 23, 2007. However, we will continue to accept new information about any listed species at any time.

ADDRESSES: Information submitted on these species should be sent to the Service at the following addresses. Information received in response to this notice of review will be available for public inspection by appointment, during normal business hours, at the same addresses.

Information regarding the Bee Creek Cave harvestman (*reddelli*), Bone Cave harvestman (*reyesi*), Coffin Cave mold beetle, Kretschmarr Cave beetle, Tooth Cave pseudoscorpion, Tooth Cave spider, Devils River minnow, Large-fruited sand verbena, and Texas snowbells should be sent to the Field Supervisor, Attention 5-year Review, U.S. Fish and Wildlife Service, Austin Ecological Services Field Office, 10711 Burnet Road, Suite 200, Austin, Texas 78758. The office phone number is 512–490–0057.

Information regarding Attwater's prairie chicken should be sent to the Refuge Manager, Attention 5-year Review, Attwater Prairie Chicken National Wildlife Refuge, P.O. Box 519, Eagle Lake, Texas 77434. The office phone number is 979–234–3278, and web address is: *http://southwest.fws.gov/refuges/texas/attwater/.*

Information regarding the Chiricahua leopard frog, New Mexico ridge-nosed rattlesnake, Gila topminnow, Loach minnow, Spikedace, Arizona cliffrose, Nichol Turk's head cactus, San Francisco Peaks groundsel, and Sentry milkvetch should be sent to the Field Supervisor, Attention 5-year Review, U.S. Fish and Wildlife Service, Arizona Ecological Services Field Office, 2321 West Royal Palm Road, Suite 103, Phoenix, AZ 85021. The office phone number is 602–242–0210.

Information regarding Walker's manioc should be sent to the Field Supervisor, Attention 5-year Review, U.S. Fish and Wildlife Service c/o TAMU–CC, Ecological Services, 6300 Ocean Drive, Unit 5837, Corpus Christi, TX 78412. The office phone number is 361–994–9005.

Information regarding the Ouachita rock-pocketbook clam should be sent to the Field Supervisor, Attention 5-year

Review, U.S. Fish and Wildlife Service, Oklahoma Ecological Services Field Office, 222 S. Houston, Suite A, Tulsa, OK 74127. The office phone number is 918–581–7458.

Information regarding Knowlton's cactus, Mancos milkvetch, and Pecos sunflower should be sent to the Field Supervisor, Attention 5-year Review, U.S. Fish and Wildlife Service, New Mexico Ecological Services Field Office, 2105 Osuna Road, NE., Albuquerque, NM 87113. The office phone number is 505–346–2525.

FOR FURTHER INFORMATION CONTACT: For species specific information, contact the appropriate office named in **ADDRESSES**.

SUPPLEMENTARY INFORMATION:

Why is a 5-year review conducted?

Section 4(c)(2)(A) of the Act (16 U.S.C. 1531 *et seq.*) requires that we conduct a review of listed species at least once every 5 years. We are then, under section 4(c)(2)(B) and the provisions of subsections (a) and (b), to determine, on the basis of such a review, whether or not any species should be removed (delisted) from the List of Endangered and Threatened Wildlife and Plants (50 CFR 17.12), or reclassified from endangered to threatened (downlisted), or from threatened to endangered (uplisted).

The 5-year review is an assessment of the best scientific and commercial data available at the time of the review. Therefore, we are requesting submission of any new information (best scientific and commercial data) on the following 24 species since their original listings as either endangered (Arizona cliffrose, Attwater's prairie chicken, Bee Creek Cave harvestman, Bone Cave harvestman, Coffin Cave mold beetle, Gila topminnow, Knowlton's cactus, Kretschmarr Cave mold beetle, Large-fruited sand verbena, Mancos milkvetch, Nichol Turk's head cactus , Ouachita rock pocketbook, Sentry milkvetch, Texas snowbells, Tooth Cave pseudoscorpion, Tooth Cave spider, and Walker's manioc) or threatened (Chiricahua leopard frog, Devils River minnow, Loach minnow, New Mexico ridge-nosed rattlesnake, Pecos sunflower, San Francisco Peaks groundsel, and Spikedace). If the present classification of any of these species is not consistent with the best scientific and commercial information available, the Service will recommend whether or not a change is warranted in the Federal classification of that species. Any change in Federal classification would require a separate rule-making process.

Our regulations at 50 CFR 424.21 require that we publish a notice in the **Federal Register** announcing those species currently under active review. This notice announces our active review of the 24 species listed in Table 1.

What information is considered in the review?

A 5-year review considers all new information available at the time of the review. These reviews will consider the best scientific and commercial data that has become available since the current listing determination or most recent status review of each species, such as:

A. Species biology, including but not limited to population trends, distribution, abundance, demographics, and genetics;

B. Habitat conditions, including but not limited to amount, distribution, and suitability;

C. Conservation measures that have been implemented to benefit the species;

D. Threat status and trends (see five factors under heading ''How do we determine whether a species is endangered or threatened?''); and

E. Other new information, data, or corrections, including but not limited to taxonomic or nomenclatural changes, identification of erroneous information contained in the List of Endangered and Threatened Wildlife and Plants, and improved analytical methods.

How are these species currently listed?

The List of Endangered and Threatened Wildlife and Plants (List) is found in 50 CFR 17.11 (wildlife) and 17.12 (plants). Amendments to the List through final rules are published in the **Federal Register**. The List is also available on our internet site at *http://www.fws.gov/endangered/wildlife.html*. In Table 1 below, we provide a summary of the listing information for the species under active review.

TABLE 1.—SUMMARY OF THE LISTING INFORMATION

Common name	Scientific name	Status	Where listed	Final listing rule
Arizona cliffrose	*Purshia subintegra*	E	AZ	49 FR 22326
Attwater's prairie chicken	*Tympanuchus cupido attwateri*	E	TX	32 FR 4001
Bee Creek Cave harvestman	*Texella reddelli*	E	TX	53 FR 36029
Bone Cave harvestman	*Texella reyesi*	E	TX	53 FR 36029
Chiricahua leopard frog	*Rana chiricahuensis*	T	AZ, NM	67 FR 40789
Coffin Cave mold beetle	*Bastrisodes texanus*	E	TX	53 FR 36029
Devils River minnow	*Dionda diaboli*	T	TX	64 FR 56596
Gila topminnow	*Poeciliopsis occidentalis*	E	AZ, NM	32 FR 4001
Knowlton's cactus	*Pediocactus knowltonii*	E	CO, NM	44 FR 62244
Kretschmarr Cave mold beetle	*Texamaurops reddelli*	E	TX	53 FR 36029
Large-fruited sand verbena	*Abronia macrocarpa*	E	TX	53 FR 37975
Loach minnow	*Tiaroga cobitis*	T	AZ, NM	51 FR 39468
Mancos milkvetch	*Astragalus humillimus*	E	CO, NM	50 FR 26568
New Mexico ridge-nosed rattlesnake	*Crotalus willardi obscurus*	T	AZ, NM	43 FR 34476
Nichol Turk's head cactus	*Echinocactus horizonthalonius var. nicholii*	E	AZ	44 FR 61927
Ouachita rock-pocketbook clam	*Arkansia wheeleri*	E	AR, OK	56 FR 54950
Pecos sunflower	*Helianthus paradoxus*	T	NM, TX	64 FR 56581
San Francisco Peaks groundsel	*Senecio franciscanus*	T	AZ	48 FR 52743
Sentry milkvetch	*Astralagus cremnophylax var. cremnophylax.*	E	AZ	55 FR 50184
Spikedace	*Meda fulgida*	T	AZ, NM	51 FR 23769
Texas snowbells	*Styrax texanus*	E	TX	49 FR 40036
Tooth Cave pseudoscorpion	*Tartarocreagris texana*	E	TX	53 FR 36029
Tooth Cave spider	*Leptoneta myopica*	E	TX	53 FR 36029
Walker's manioc	*Manihot walkerae*	E	TX	56 FR 49850

Definitions Related to This Notice

The following definitions are provided to assist those persons who contemplate submitting information regarding the species being reviewed:

A. *Species* includes any species or subspecies of fish, wildlife, or plant, and any distinct population segment of any species of vertebrate, which interbreeds when mature.

B. *Endangered* means any species that is in danger of extinction throughout all or a significant portion of its range.

C. *Threatened* means any species that is likely to become an endangered species within the foreseeable future throughout all or a significant portion of its range.

How do we determine whether a species is endangered or threatened?

Section 4(a)(1) of the Act establishes that we determine whether a species is endangered or threatened based on one or more of the five following factors:

A. The present or threatened destruction, modification, or curtailment of its habitat or range;

B. Overutilization for commercial, recreational, scientific, or educational purposes;

C. Disease or predation;

D. The inadequacy of existing regulatory mechanisms; or

E. Other natural or manmade factors affecting its continued existence.

Section 4(a)(1) of the Act requires that our determination be made on the basis of the best scientific and commercial data available.

What could happen as a result of this review?

If we find that there is new information concerning any of the 24 species listed in Table 1 indicating a change in classification may be warranted, we may propose a new rule that could do one of the following: (a) Reclassify the species from endangered to threatened (downlist); (b) reclassify the species from threatened to endangered (uplist); or (c) remove the species from the List. If we determine that a change in classification is not warranted, then these species will remain on the List under their current status.

Public Solicitation of New Information

We request any new information concerning the status of the 24 species listed in Table 1. See ''What information is considered in the review?'' heading for specific criteria. Information submitted should be supported by documentation such as maps, bibliographic references, methods used to gather and analyze the data, and/or copies of any pertinent publications, reports, or letters by knowledgeable sources. Before including your address, phone number, e-mail address, or other personal identifying information in your comments, you should be aware that your entire comment—including your personal identifying information—may be made publicly available at any time. While you can ask us in your comment to withhold your personal identifying information from public review, we cannot guarantee that we will be able to do so.

Authority

This document is published under the authority of the Endangered Species Act (16 U.S.C. 1531 *et seq.*).

Dated: March 14, 2007.

Benjamin N. Tuggle,

Regional Director, Southwest Region, Fish and Wildlife Service.

[FR Doc. E7–7636 Filed 4–20–07; 8:45 am]

BILLING CODE 4310–55–P

DEPARTMENT OF THE INTERIOR

Bureau of Land Management

[MT–020–1010–PO]

Notice of Public Meeting, Eastern Montana Resource Advisory Council Meeting

AGENCY: Bureau of Land Management, Interior, Montana, Billings and Miles City Field Offices.

ACTION: Notice of public meeting.

SUMMARY: In accordance with the Federal Land Policy and Management Act (FLPMA) and the Federal Advisory Committee Act of 1972 (FACA), the U.S. Department of the Interior, Bureau of Land Management (BLM) Eastern Montana Resource Advisory Council (RAC), will meet as indicated below.

DATES: The meetings will be held May 30 and 31, 2007 in Miles City, MT with each day beginning at 8 a.m. The meetings will adjourn at approximately 3:30 p.m. each day. The public comment period will be at approximately 11 a.m. on the 31st. When determined, the meeting place will be announced in a news release.

FOR FURTHER INFORMATION CONTACT: Mark Jacobsen, Public Affairs Specialist, Miles City Field Office, 111 Garryowen Road, Miles City, Montana 59301. Telephone: (406) 233–2831.

SUPPLEMENTARY INFORMATION: The 15-member Council advises the Secretary of the Interior, through the Bureau of Land Management, on a variety of planning and management issues associated with public land management in Montana. At this meeting, topics to discuss include:

Field Manager Updates,
The Miles City Field Office and Billings Field Office Updates,
Subcommittee updates and working sessions,
—and other topics the council may raise.

All meetings are open to the public. The public may present written comments to the Council. Each formal Council meeting will also have time allocated for hearing public comments. Depending on the number of persons wishing to comment and time available, the time for individual oral comments may be limited. Individuals who plan to attend and need special assistance, such as sign language interpretation, tour transportation or other reasonable accommodations, should contact the BLM as provided above.

Dated: April 16, 2007.

M. Elaine Raper,

Field Manager.

[FR Doc. E7–7632 Filed 4–20–07; 8:45 am]

BILLING CODE 4310–$$–P

DEPARTMENT OF THE INTERIOR

National Park Service

National Register of Historic Places; Notification of Pending Nominations and Related Actions

Nominations for the following properties being considered for listing or related actions in the National Register were received by the National Park Service before April 7, 2007. Pursuant to section 60.13 of 36 CFR part 60 written comments concerning the significance of these properties under the National Register criteria for evaluation may be forwarded by United States Postal Service, to the National Register of Historic Places, National Park Service, 1849 C St., NW., 2280, Washington, DC 20240; by all other carriers, National Register of Historic Places, National Park Service, 1201 Eye St., NW., 8th floor, Washington, DC 20005; or by fax, 202–371–6447. Written or faxed comments should be submitted by May 8, 2007.

J. Paul Loether,

Chief, National Register of Historic Places/National Historic Landmarks Program.

CONNECTICUT

Hartford County

Filley, Capt. Oliver, House, 130 Mountain Ave., Bloomfield, 07000420

Litchfield County

Riverton Historic District, Roughly bounded by Still and Farmington R and E. River Rd., Riverton, 07000419

Middlesex County

Parmelee House, 4 Beckwith Rd., Killingworth, 07000417

New London County

Lord, Capt. Enoch, House, 17 Tantummaheag Rd., Old Lyme, 07000418

DISTRICT OF COLUMBIA

District of Columbia

Bulletin Building, 717 6th St., NW., Washington, 07000422

Greater Fourteenth Street Historic District (Boundary Increase), 1400 Blks of P St., Rhode Island Ave., N St. and Massachusetts Ave., Washington, 07000421

FLORIDA

Hillsborough County

Hillsborough County High School, Old, 2704 N. Highland Ave., Tampa, 07000423

LOUISIANA

Iberville Parish

Bagatelle Plantation House, 695 LA 991, Sunshine, 07000424

MINNESOTA

Kandiyohi County

Willmar Tribune Building, 311 Fourth St. SW., Willmar, 07000425

Ramsey County

Payne Avenue State Bank, 965 Payne Ave., St. Paul, 07000426

NEBRASKA

Douglas County

Margaret, The, 2103 N. 16th St., Omaha, 07000427

WISCONSIN

Forest County

Butternut—Franklin Lakes Archeological District, Eagle River—Florence Ranger District, Chequamegon-Nicolet National Forest Hiles, 07000429

La Crosse County

Mindoro Cut, WI 108, bet. Mindoro and West Salem, Hamilton, 07000428

A request for a Move has been made for the following resource:

LOUISIANA

Caddo Parish

Antoine, C.C., House 1941 Perrin St. Shreveport, 99001013

[FR Doc. E7–7600 Filed 4–20–07; 8:45 am]

BILLING CODE 4312–51–P

DEPARTMENT OF THE INTERIOR

Bureau of Reclamation

Meeting of the Yakima River Basin Conservation Advisory Group, Yakima River Basin Water Enhancement Project, Yakima, WA

AGENCY: Bureau of Reclamation, Interior.

ACTION: Notice of meeting.

SUMMARY: As required by the Federal Advisory Committee Act, notice is hereby given that the Yakima River Basin Conservation Advisory Group, Yakima River Basin Water Enhancement Project, Yakima, Washington, established by the Secretary of the Interior, will hold a public meeting. The purpose of the Conservation Advisory Group is to provide technical advice and counsel to the Secretary of the Interior and Washington State on the structure, implementation, and oversight of the Yakima River Basin Water Conservation Program.

DATES: Thursday, May 24, 2007, 10 a.m.–4 p.m.

ADDRESSES: Bureau of Reclamation Office, 1917 Marsh Road, Yakima, Washington.

FOR FURTHER INFORMATION CONTACT: Mr. Walt Larrick, Acting Manager, Yakima River Basin Water Enhancement Project, 1917 Marsh Road, Yakima, Washington, 98901; 509–575–5848, extension 209.

SUPPLEMENTARY INFORMATION: The purpose of the meeting will be to review the option of using the acquired habitat lands to mitigate the impacts that occur from the planned conservation measures and develop recommendations. This meeting is open to the public.

Dated: March 21, 2007.

Walter Larrick,

Acting Program Manager, Pacific Northwest Region.

[FR Doc. 07–1833 Filed 4–20–07; 8:45 am]

BILLING CODE 4310–MN–M

DEPARTMENT OF JUSTICE

Notice of Lodging Proposed Consent Decree

In accordance with Departmental Policy, 28 CFR 50.7, notice is hereby given that a proposed consent decree in *United States* v. *Jack and Chris Barnhill,* Case No. 4:07–cv–00994–RBH, was lodged with the United States District Court for the District of South Carolina on April 12, 2007. This proposed Consent Decree concerns a complaint filed by the United States against the Defendants pursuant to Section 301(a) of the Clean Water Act (''CWA''), 33 U.S.C. 1311(a), to obtain injunctive relief from and impose civil penalties against the Defendants for filling wetlands without a permit.

The proposed Consent Decree resolves these allegations by requiring the Defendants to restore the impacted areas and to pay a civil penalty. The Department of Justice will accept written comments relating to this proposed Consent Decree for thirty (30) days from the date of publication of this notice. Please address comments to Emery Clark, Assistant United States Attorney, United States Attorney's Office, Wachovia Building, Suite 500, 1441 Main Street, Columbia, South Carolina 29201 and refer to *United States* v. *Jack and Chris Barnhill,* Case No. 4:07–cv–00994–RBH.

The proposed Consent Decree may be examined at the Clerk's Office, United States District Court for the District of South Carolina, 901 Richland Lane, Columbia, South Carolina.

In addition, the proposed Consent Decree may be viewed on the World Wide Web at *http://www.usdoj.gov/enrd/open.html.*

Stephen Samuels,

Assistant Chief, Environmental Defense Section, Environment and Natural Resources Division.

[FR Doc. 07–1995 Filed 4–20–07; 8:45 am]

BILLING CODE 4140–15–M

DEPARTMENT OF JUSTICE

Federal Bureau of Investigation

[OMB Number 1110–0011]

Violent Criminal Apprehension Program; Agency Information Collection Activities: Current Collection; Comment Requested

ACTION: 60-Day Notice of Information Collection Under Review Extension of a Currently Approved Collection for which is due to expire; 07/31/2007—VICAP Crime Analysis Report.

The Department of Justice, Federal Bureau of Investigation will be submitting the following information collection request for review and clearance in accordance with the Paperwork Reduction Act of 1995. The proposed information collection is published to obtain comments from the public and affected agencies. Comments are encouraged and will be accepted for ''sixty days'' until June 22, 2007. If you have comments, especially on the estimated public burden or associated response time, suggestions, or need a

copy of the proposed information collection instrument with instructions or additional information, please contact Program Manager, Violent Criminal Apprehension Program, National Center for the Analysis of Violent Crime, FBI Academy, Quantico, Virginia 22135, telephone number (800) 634–4097.

Written comments and/or suggestions from the public and affected agencies concerning the proposed collection of information should address one or more of the following four points:

(1) Evaluate whether the proposed collection of information is necessary for the proper performance of the function of the agency, including whether the information will have the practical utility;

(2) Evaluate the accuracy of the agency's estimate of the burden of the proposed collection of information, including the validity of the methodology and assumptions used;

(3) Enhance the quality, utility, and clarity of the information to be collected; and

(4) Minimize the burden of the collection of information on those who are to respond, including through the use of appropriate automated, electronic, mechanical, or other technological collection techniques or other forms of information technology, *e.g.*, permitting electronic submission of responses.

Overview of this information:

(1) *Type of Information Collection:* Approval, without change, of a currently approved collection for which approval is due to expire 07/31/2007.

(2) *Title of the Form/Collection:* ViCAP Crime Analysis Report FD–676 (Rev. 7/23/2004).

(3) *Agency form number, if any, and the applicable component of the Department sponsoring the collection:* None. Federal Bureau of Investigation, United States Department of Justice.

(4) *Affected public who will be asked or required to respond, as well as a brief abstract: Primary:* State and local government law enforcement agencies charged with the responsibility for the investigation of violent crimes.

Others: None.

ViCAP is a nationwide data information center which collects, collates, and analyzes crimes of violence—specifically murder and sexual assaults. Case submissions are compared to all other cases in an attempt to identify similar cases which facilitates cooperation , and coordination between law enforcement agencies and provides support to identify, track and apprehend violent serial offenders.

(5) *An estimate of the total number of respondents and the amount of time estimated for an average respondent to respond/reply:* Of the possible 17,000 government entities that are eligible to apply it is estimated that only forty to sixty percent will actually submit responses to ViCAP. The time burden of the applicants is 60 minutes per application.

(6) *An estimate of the total public burden (in hours) associated with the collection:* The total annual hour burden to provide the information is estimated at 10,000 hours.

If additional information is required, contact: Lynn Bryant, Department Clearance Officer, United States Department of Justice, Justice Management Division, Policy and Planning Staff, Patrick Henry Building, 601 D Street, NW., Washington, DC 20530.

Dated: April 17, 2007.

Lynn Bryant,

Department Clearance Office, PRA, United States Department of Justice.

[FR Doc. E7–7646 Filed 4–20–07; 8:45 am]

BILLING CODE 4410–02–P

DEPARTMENT OF JUSTICE

United States Parole Commission

Public Announcement: Pursuant to the Government in the Sunshine Act (Pub. L. 94–409) [5 U.S.C. Section 552b]

AGENCY HOLDING MEETING: Department of Justice, United States Parole Commission.

TIME AND DATE: 10 a.m., Thursday, April 26, 2007.

PLACE: 5550 Friendship Blvd., Fourth Floor, Chevy Chase, MD 20815.

STATUS: Open.

MATTERS TO BE CONSIDERED: The following matters have been placed on the agenda for the *open* Parole Commission meeting:

1. Approval of Minutes of Previous Commission Meeting.

2. Reports from the Chairman, Commissioners, Chief of Staff, and Section Administrators.

AGENCY CONTACT: Thomas W. Hutchison, Chief of Staff, United States Parole Commission, (301) 492–5990.

Dated: April 18, 2007.

Rockne Chickinell,

General Counsel, U.S. Parole Commission.

[FR Doc. 07–2017 Filed 4–19–07; 9:44 am]

BILLING CODE 4410–31–M

DEPARTMENT OF JUSTICE

United States Parole Commission

Public Announcement: Pursuant to the Government in the Sunshine Act (Pub. L. 94–409) [5 U.S.C. Section 552b]

AGENCY HOLDING MEETING: Department of Justice, United States Parole Commission.

DATE AND TIME: 11:30 a.m., Thursday, April 26, 2007.

PLACE: U.S. Parole Commission, 5550 Friendship Boulevard, 4th Floor, Chevy Chase, Maryland 20815.

STATUS: Closed.

MATTERS CONSIDERED: The following matters will be considered during the *closed* portion of the Commission's Business Meeting:

Petitions for reconsideration involving four original jurisdiction cases pursuant to 28 CFR 2.27.

AGENCY CONTACT: Thomas W. Hutchison, Chief of Staff, United States Parole Commission, (301) 492–5990.

Dated: April 18, 2007.

Rockne Chickinell,

General Counsel, U.S. Parole Commission.

[FR Doc. 07–2031 Filed 4–19–07; 8:44 am]

BILLING CODE 4410–31–M

DEPARTMENT OF LABOR

Office of the Secretary

Submission for OMB Review: Comment Request

April 18, 2007.

The Department of Labor (DOL) has submitted the following public information collection request (ICR) to the Office of Management and Budget (OMB) for review and approval in accordance with the Paperwork Reduction Act of 1995 (Pub. L. 104–13, 44 U.S.C. Chapter 35). A copy of this ICR, with applicable supporting documentation, may be obtained at *http://www.reginfo.gov/public/do/PRAMain*, or contact Ira Mills on 202–693–4122 (this is not a toll-free number) or E-Mail: *Mills.Ira@dol.gov*.

Comments should be sent to the Office of Information and Regulatory Affairs, Attn: OMB Desk Officer for U.S. Department of Labor/Veterans' Employment and Training Service (VETS) Office of Management and Budget, Room 10235, Washington, DC 20503, 202–395–7316 (this is not a toll free number), within 30 days from the date of this publication in the **Federal Register**.

The OMB is particularly interested in comments which:

• Evaluate whether the proposed collection of information is necessary for the proper performance of the functions of the agency, including whether the information will have practical utility;

• Evaluate the accuracy of the agency's estimate of the burden of the proposed collection of information, including the validity of the methodology and assumptions used;

• Enhance the quality, utility and clarity of the information to be collected; and

• Minimize the burden of the collection of information on those who are to respond, including through the use of appropriate automated, electronic, mechanical, or other technological collection techniques or other forms of information technology, e.g., permitting electronic submission of responses.

Agency: Veterans' Employment and Training Service.

Type of Review: Extension without change of a currently approved collection.

Title: Eligibility Data Form: Uniformed Services Employment and Reemployment Rights Act and Veteran's Preference.

OMB Number: 1293–0002.

Frequency: On occasion.

Affected Public: Individuals or Households.

Type of Response: Reporting; Recordkeeping.

Number of Respondents: 1,500.

Annual Responses: 1,500.

Average Response Time: 15 minutes.

Total Annual Burden Hours: 375.

Total Annualized Capital/Startup Costs: 0.

Total Annual Costs (operating/maintaining systems or purchasing services): 0.

Description: The VETS/USERRA/VP–1010 is used to file complaints with the Department of Labor's Veterans' Employment and Training Service under either the Uniformed Services Employment and Reemployment Rights Act or laws and regulations related to veteran's preference in the Federal employment.

Ira L. Mills,

Departmental Clearance Officer/Team Leader.

[FR Doc. E7–7658 Filed 4–20–07; 8:45 am]

BILLING CODE 4510–79–P

DEPARTMENT OF LABOR

Employment and Training Administration

[TA–W–61,276]

ABN Amro, Chicago, IL; Notice of Termination of Investigation

Pursuant to Section 221 of the Trade Act of 1974, as amended, an investigation was initiated on April 10, 2007 in response to a worker petition filed by a State agency on behalf of workers at ABN Amro, Chicago, Illinois.

The petitioner has requested that the petition be withdrawn. Consequently, the investigation has been terminated.

Signed at Washington, DC, this 13th day of April, 2007.

Elliott S. Kushner,

Certifying Officer, Division of Trade Adjustment Assistance.

[FR Doc. E7–7613 Filed 4–20–07; 8:45 am]

BILLING CODE 4510–FN–P

DEPARTMENT OF LABOR

Employment and Training Administration

[TA–W–60,548]

Alan White Company, Sulligent, AL; Notice of Affirmative Determination Regarding Application for Reconsideration

By application postmarked March 28, 2007, a petitioner requested administrative reconsideration of the Department of Labor's Notice of Negative Determination Regarding Eligibility To Apply for Worker Adjustment Assistance, applicable to workers and former workers of the subject firm. The determination was issued on March 8, 2007 and published in the **Federal Register** on March 22, 2007 (72 FR 13528).

The initial investigation resulted in a negative determination based on the finding that imports of upholstered furniture did not contribute importantly to worker separations at the subject firm and no shift of production to a foreign source occurred.

The Department reviewed the request for reconsideration and has determined that the petitioner has provided additional information. Therefore, the Department will conduct further investigation to determine if the workers meet the eligibility requirements of the Trade Act of 1974.

Conclusion

After careful review of the application, I conclude that the claim is of sufficient weight to justify reconsideration of the Department of Labor's prior decision. The application is, therefore, granted.

Signed at Washington, DC, this 13th of April, 2007.

Elliott S. Kushner,

Certifying Officer, Division of Trade Adjustment Assistance.

[FR Doc. E7–7615 Filed 4–20–07; 8:45 am]

BILLING CODE 4510–FN–P

DEPARTMENT OF LABOR

Employment and Training Administration

[TA–W–60,757]

Alan White Company; Shannon, Mississippi; Notice of Affirmative Determination Regarding Application for Reconsideration

By application dated April 5, 2007, a petitioner requested administrative reconsideration of the Department of Labor's Notice of Negative Determination Regarding Eligibility To Apply for Worker Adjustment Assistance, applicable to workers and former workers of the subject firm. The determination was issued on March 8, 2007 and published in the **Federal Register** on March 22, 2007 (72 FR 13528).

The initial investigation resulted in a negative determination based on the finding that imports of upholstered furniture did not contribute importantly to worker separations at the subject firm and no shift of production to a foreign source occurred.

The Department reviewed the request for reconsideration and has determined that the petitioner has provided additional information. Therefore, the Department will conduct further investigation to determine if the workers meet the eligibility requirements of the Trade Act of 1974.

Conclusion

After careful review of the application, I conclude that the claim is of sufficient weight to justify reconsideration of the Department of Labor's prior decision. The application is, therefore, granted.

Signed at Washington, DC, this 12th of April, 2007.

Elliott S. Kushner,

Certifying Officer, Division of Trade Adjustment Assistance.

[FR Doc. E7–7617 Filed 4–20–07; 8:45 am]

BILLING CODE 4510–FN–P

DEPARTMENT OF LABOR

Employment and Training Administration

[TA–W–60,850]

The Alan White Company Corporate Office, Stamps, Arkansas; Notice of Affirmative Determination Regarding Application for Reconsideration

By application dated April 5, 2007, a petitioner requested administrative reconsideration of the Department of Labor's Notice of Negative Determination Regarding Eligibility to Apply for Worker Adjustment Assistance, applicable to workers and former workers of the subject firm. The determination was issued on March 28, 2007 and published in the **Federal Register** on April 10, 2007 (72 FR 17938).

The negative determination was based on the Department's findings that that the petitioning workers of this firm or subdivision do not produce an article within the meaning of Section 222 of the Act.

The Department reviewed the request for reconsideration and has determined that the petitioner has provided additional information. Therefore, the Department will conduct further investigation to determine if the workers meet the eligibility requirements of the Trade Act of 1974.

Conclusion

After careful review of the application, I conclude that the claim is of sufficient weight to justify reconsideration of the Department of Labor's prior decision. The application is, therefore, granted.

Signed at Washington, DC, this 12th of April, 2007.

Elliott S. Kushner,

Certifying Officer, Division of Trade Adjustment Assistance.

[FR Doc. E7–7619 Filed 4–20–07; 8:45 am]

BILLING CODE 4510–FN–P

DEPARTMENT OF LABOR

Employment and Training Administration

[TA–W–60,788]

Hearth and Home Technologies, Division of HNI Industries, Mt. Pleasant, IA; Notice of Revised Determination on Reconsideration of Alternative Trade Adjustment Assistance

By letter dated April 2, 2007, a state official requested administrative reconsideration regarding Alternative Trade Adjustment Assistance (ATAA) applicable to workers of the subject firm. The negative determination was signed on March 16, 2007, and was published in the **Federal Register** on March 30, 2007 (72 FR 15168).

The workers of Hearth and Home Technologies, division of HNI Industries, Mt. Pleasant, Iowa were certified eligible to apply for Trade Adjustment Assistance (TAA) on March 16, 2007.

The initial ATAA investigation determined that the skills of the subject worker group are easily transferable to other positions in the local area.

In the request for reconsideration, the petitioner provided sufficient information confirming that the skills of the workers at the subject firm are not easily transferable in the local commuting area.

Additional investigation has determined that the workers possess skills that are not easily transferable. A significant number or proportion of the worker group are age fifty years or over. Competitive conditions within the industry are adverse.

Conclusion

After careful review of the additional facts obtained on reconsideration, I conclude that the requirements of Section 246 of the Trade Act of 1974, as amended, have been met for workers at the subject firm.

In accordance with the provisions of the Act, I make the following certification:

All workers of Hearth and Home Technologies, division of HNI Industries, Mt. Pleasant, Iowa, who became totally or partially separated from employment on or after January 16, 2006 through March 16, 2009, are eligible to apply for trade adjustment assistance under Section 223 of the Trade Act of 1974 and are also eligible to apply for alternative trade adjustment assistance under Section 246 of the Trade Act of 1974.

Signed in Washington, DC, this 13th day of April, 2007.

Elliott S. Kushner,

Certifying Officer, Division of Trade Adjustment Assistance.

[FR Doc. E7–7618 Filed 4–20–07; 8:45 am]

BILLING CODE 4510–FN–P

DEPARTMENT OF LABOR

Employment and Training Administration

Investigations Regarding Certifications of Eligibility To Apply for Worker Adjustment Assistance and Alternative Trade Adjustment Assistance

Petitions have been filed with the Secretary of Labor under Section 221(a) of the Trade Act of 1974 (''the Act'') and are identified in the Appendix to this notice. Upon receipt of these petitions, the Director of the Division of Trade Adjustment Assistance, Employment and Training Administration, has instituted investigations pursuant to Section 221(a) of the Act.

The purpose of each of the investigations is to determine whether the workers are eligible to apply for adjustment assistance under Title II, Chapter 2, of the Act. The investigations will further relate, as appropriate, to the determination of the date on which total or partial separations began or threatened to begin and the subdivision of the firm involved.

The petitioners or any other persons showing a substantial interest in the subject matter of the investigations may request a public hearing, provided such request is filed in writing with the Director, Division of Trade Adjustment Assistance, at the address shown below, not later than May 3, 2007.

Interested persons are invited to submit written comments regarding the subject matter of the investigations to the Director, Division of Trade Adjustment Assistance, at the address shown below, not later than May 3, 2007.

The petitions filed in this case are available for inspection at the Office of the Director, Division of Trade Adjustment Assistance, Employment and Training Administration, U.S. Department of Labor, Room C–5311, 200 Constitution Avenue, NW., Washington, DC 20210.

Signed at Washington, DC, this 10th day of April 2007.

Ralph DiBattista,

Director, Division of Trade Adjustment Assistance.

APPENDIX

[TAA petitions instituted between 4/2/07 and 4/6/07]

TA–W	Subject firm (petitioners)	Location	Date of institution	Date of petition
61221	Hickory Hardware/Belwith International Ltd (Comp)	Grandville, MI	04/02/07	04/01/07
61222	Good Companion Sewing Co. (Wkrs)	San Francisco, CA	04/02/07	03/30/07
61223	ITW Waterbury Buckle (State)	Waterbury, CT	04/02/07	03/30/07
61224	Opportunity Inc. (Comp)	Highland Park, IL	04/02/07	04/02/07
61225	Royal Home Fashions (Comp)	Henderson, NC	04/02/07	03/30/07
61226	Delphi Corporation (Other)	Flint, MI	04/02/07	03/30/07
61227	Acument Global Technologies Camar LLC (Comp)	Decorah, IA	04/02/07	03/30/07
61228	Form Tools Incorporated (Wkrs)	Jackson, MI	04/02/07	03/30/07
61229	Aurra Industries, A Remy Inc. Company (Comp)	Edmond, OK	04/02/07	03/14/07
61230	Transwitch Corporation (Wkrs)	Shelton, CT	04/02/07	03/27/07
61231	Staffmark Investment LLC AAA Human Capital LLC (State).	Enfield, CT	04/02/07	03/30/07
61232	Wheatland Tube Co. (USW)	Wheatland, PA	04/02/07	03/28/07
61233	Sara Lee (Wkrs)	Rockingham, NC	04/03/07	04/02/07
61234	Penn Mould Industries (Union)	Washington, PA	04/03/07	03/29/07
61235	WCI Steel, Inc. (Comp)	Warren, OH	04/03/07	04/02/07
61236	Precision Technologies, Inc. (Comp)	Reno, PA	04/03/07	04/02/07
61237	Oneida Ltd. (Comp)	Oneida, NY	04/03/07	03/14/07
61238	Quality Transparent Bag Co. Inc. (Comp)	Bay City, MI	04/03/07	03/30/07
61239	Direct Holdings Libraries, Inc. (Wkrs)	Chicago, IL	04/03/07	04/02/07
61240	Graphic Packaging Int'l, Inc. (Comp)	Wausau, WI	04/03/07	03/30/07
61241	Navisa Inc. (State)	Brenham, TX	04/03/07	04/02/07
61242	Visteon Corporation (Comp)	Chicago, IL	04/03/07	03/16/07
61243	Ferro Electronics Material Systems (Comp)	Niagara Falls, NY	04/04/07	04/04/07
61244	Lear Corporation-Sheboygan (UAW)	Sheboygan, WI	04/04/07	03/09/07
61245	Addson Shoe Company A Div. of Munro & Co., Inc. (State).	Wynne, AR	04/05/07	04/04/07
61246	Little Valley facility of Bush Industries Inc. (Comp)	Little Valley, NY	04/05/07	04/02/07
61247	Anderson Corporation (State)	Bayport, MN	04/05/07	04/04/07
61248	Bearing Point/Creative Services (Comp)	New York, NY	04/05/07	03/13/07
61249	Cintas (Wkrs)	Mason, OH	04/05/07	03/04/07
61250	Thomasville Furniture (Plant 8) (Wkrs)	Hickory, NC	04/05/07	04/05/07
61251	Mount Vernon Mills Johnston Division (Comp)	Johnston, SC	04/05/07	04/03/07
61252	Wetherill Assciates Inc./Transpo (State)	Orlando, FL	04/05/07	03/27/07
61253	Keystone Powered Metal (Comp)	Columbus, OH	04/05/07	04/03/07
61254	Robinson-Anton (Comp)	Fairview, NJ	04/06/07	04/05/07
61255	Unisys Corporation (Wkrs)	Blue Bell, PA	04/06/07	04/04/07
61256	E.B.I. (Wkrs)	Allendale, NJ	04/06/07	03/20/07
61257	Marathon Electronic (IUE)	Lima, OH	04/06/07	04/05/07
61258	Springs Global US, Inc. Grace Complex (Comp)	Lancaster, SC	04/06/07	04/05/07
61259	Amtek Gears Inc. (Wkrs)	Bay City, MI	04/06/07	04/05/07
61260	Target Sales Corporation (Comp)	Frisco, TX	04/06/07	03/29/07

[FR Doc. E7–7614 Filed 4–20–07; 8:45 am]

BILLING CODE 4510–FN–P

DEPARTMENT OF LABOR

Employment and Training Administration

[TA–W–60,625]

Huntington Foam Pittsburgh Corporation, a Subsidiary of Huntington Foam Corporation, Mt. Pleasant, PA; Dismissal of Application for Reconsideration

Pursuant to 29 CFR 90.18(C) an application for administrative reconsideration was filed with the Director of the Division of Trade Adjustment Assistance for workers at Huntington Foam Pittsburgh Corporation, a subsidiary of Huntington Foam Corporation, Mt. Pleasant, Pennsylvania. The application did not contain new information supporting a conclusion that the determination was erroneous, and also did not provide a justification for reconsideration of the determination that was based on either mistaken facts or a misinterpretation of facts or of the law. Therefore, dismissal of the application was issued.

TA–W–60,625; Huntington Foam Pittsburgh Corporation, a Subsidiary of Huntington Foam Corporation, Mt. Pleasant, Pennsylvania (April 9, 2007).

Signed at Washington, DC, this 10th day of April 2007.

Ralph DiBattista,

Director, Division of Trade Adjustment Assistance.

[FR Doc. E7–7616 Filed 4–20–07; 8:45 am]

BILLING CODE 4510–FN–P

DEPARTMENT OF LABOR

Employment and Training Administration

[TA–W–61,273]

Jeld-Wen Door Systems, Door Division, Chiloquin, OR; Notice of Termination of Investigation

Pursuant to Section 221 of the Trade Act of 1974, as amended, an investigation was initiated on April 10, 2007 in response to a petition filed on behalf of workers of Jeld-Wen Door Systems, Door Division, Chiloquin, Oregon.

This petition is a photocopy of the petition filed for this worker group on March 21, 2007 (TA–W–61,158). On April 5, 2007, the Department issued a negative determination applicable to

workers of Jeld-Wen Door Systems, Door Division in Chiloquin, Oregon.

Consequently, further investigation would serve no purpose, and the investigation has been terminated.

Signed at Washington, DC, this 12th day of April, 2007.

Linda G. Poole,

Certifying Officer, Division of Trade Adjustment Assistance.

[FR Doc. E7–7623 Filed 4–20–07; 8:45 am]

BILLING CODE 4510–FN–P

DEPARTMENT OF LABOR

Employment and Training Administration

[TA–W–61,198]

L.A. Darling Company; Sun Prairie, WI; Notice of Termination of Investigation

Pursuant to Section 221 of the Trade Act of 1974, as amended, an investigation was initiated on March 27, 2007 in response to a petition filed by a company official on behalf of workers L.A. Darling Company, Sun Prairie, Wisconsin.

The petitioner has requested that the petition be withdrawn. Consequently, the investigation has been terminated.

Signed in Washington, DC, this 9th day of April, 2007.

Linda G. Poole,

Certifying Officer, Division of Trade Adjustment Assistance.

[FR Doc. E7–7621 Filed 4–20–07; 8:45 am]

BILLING CODE 4510–FN–P

DEPARTMENT OF LABOR

Employment and Training Administration

[TA–W–61,261]

Missbrenner Prints, Inc.; Clifton, NJ; Notice of Termination of Investigation

Pursuant to Section 221 of the Trade Act of 1974, as amended, an investigation was initiated on April 9, 2007 in response to a petition filed by a company official on behalf of workers of Missbrenner Prints, Inc., Clifton, New Jersey.

The petitioning group of workers is covered by an earlier petition (TA–W–60,945) filed on February 12, 2007, that is the subject of an ongoing investigation for which a determination has not yet been issued.

Further investigation in this case would serve no purpose. Therefore, the investigation under this petition has been terminated.

Signed at Washington, DC, this 12th day of April, 2007.

Linda G. Poole,

Certifying Officer, Division of Trade Adjustment Assistance.

[FR Doc. E7–7622 Filed 4–20–07; 8:45 am]

BILLING CODE 4510–FN–P

DEPARTMENT OF LABOR

Employment and Training Administration

[TA–W–61,069; TA–W–61,069A; TA–W–61,069B]

Quaker Fabric Corporation of Fall River; Plants A/B–700, C–710 and J–720; Notice of Termination of Investigation

Pursuant to Section 221 of the Trade Act of 1974, an investigation was initiated on March 6, 2007 in response to a petition filed by the Trade Program Manager, Division of Career Service of Boston, Massachusetts on behalf of workers at Quaker Fabric Corporation of Fall River, Plant A/B–700, Fall River, Massachusetts, (TA–W–61,069), Plant C–710, Fall River, Massachusetts (TA–W–61,069A) and Plant J–720, Fall River, Massachusetts (TA–W–61,069B).

The petitioner has requested that the petition be withdrawn. Consequently, the investigation has been terminated.

Signed in Washington, DC, this 12th day of April 2007.

Elliott S. Kushner,

Certifying Officer, Division of Trade Adjustment Assistance.

[FR Doc. E7–7620 Filed 4–20–07; 8:45 am]

BILLING CODE 4510–FN–P

DEPARTMENT OF LABOR

Employment and Training Administration

[TA–W–61,274]

Robert Bosch Corporation, Sumter, SC; Notice of Termination of Investigation

Pursuant to Section 221 of the Trade Act of 1974, as amended, an investigation was initiated on April 10, 2007 in response to a petition filed by the State of South Carolina on behalf of workers at Robert Bosch Corporation, Sumter, South Carolina.

The petitioning group of workers is covered by an active certification applicable to workers of Bosch-Sumter Plant, Automotive Technology-Chassis Division, Sumter, South Carolina (TA–W–60,006), which expires on September 22, 2008.

Consequently, further investigation in this case would serve no purpose, and the investigation has been terminated.

Signed at Washington, DC, this 13th day of April, 2007.

Linda G. Poole,

Certifying Officer, Division of Trade Adjustment Assistance.

[FR Doc. E7–7624 Filed 4–20–07; 8:45 am]

BILLING CODE 4510–FN–P

NATIONAL SCIENCE FOUNDATION

Astronomy and Astrophysics Advisory Committee #13883; Notice of Meeting

In accordance with the Federal Advisory Committee Act (Pub. L. 92–463, as amended), the National Science Foundation announces the following Astronomy and Astrophysics Advisory Committee (#13883) meeting:

Date And Time: May 10–11, 2007, 8:30 a.m.–5 p.m.

Place: National Science Foundation, Room 1235, Stafford I Building, 4201 Wilson Blvd., Arlington, VA, 22230.

Type of Meeting: Open.

Contact Person: Dr. G. Wayne Van Citters, Director, Division of Astronomical Sciences, Suite 1045, National Science Foundation, 4201 Wilson Blvd., Arlington, VA 22230. Telephone: 703–292–4908. Additional information is available at *http://www.nsf.gov/mps/ast/aaac.jsp.*

Purpose of Meeting: To provide advice and recommendations to the National Science Foundation (NSF), the National Aeronautics and Space Administration (NASA) and the U.S. Department of Energy (DOE) on issues within the field of astronomy and astrophysics that are of mutual interest and concern to the agencies.

Agenda: To hear presentations of current programming by representatives from NSF, NASA, DOE and other agencies relevant to astronomy and astrophysics; to discuss current and potential areas of cooperation between the agencies; to formulate recommendations for continued and new areas of cooperation and mechanisms for achieving them.

Dated: April 17, 2007.

Susanne E. Bolton,

Committee Management Officer.

[FR Doc. E7–7599 Filed 4–20–07; 8:45 am]

BILLING CODE 7555–01–P

OFFICE OF THE UNITED STATES TRADE REPRESENTATIVE

[Docket No. WTO/DS–363]

WTO Dispute Settlement Proceeding Regarding China—Measures Affecting Trading Rights and Distribution Services for Certain Publications and Audiovisual Entertainment Products

AGENCY: Office of the United States Trade Representative.

ACTION: Notice; request for comments.

SUMMARY: The Office of the United States Trade Representative (USTR) is providing notice that on April 10, 2007, in accordance with the Marrakesh Agreement Establishing the World Trade Organization (WTO Agreement), the United States requested consultations with respect to (1) Certain measures that restrict trading rights with respect to imported films for theatrical release, audiovisual home entertainment products (*e.g.*, video cassettes and DVDs), sound recordings, and publications (*e.g.*, books, magazines, newspapers, and electronic publications), and (2) certain measures that restrict market access for, or discriminate against, foreign suppliers of distribution services for publications and foreign suppliers of audiovisual services (including distribution services) for audiovisual home entertainment products. That request may be found at *http://www.wto.org* contained in a document designated as WT/DS363/1. USTR invites written comments from the public concerning the issues raised in this dispute.

DATES: Although USTR will accept any comments received during the course of the consultations, comments should be submitted on or before May 7, 2007 to be assured of timely consideration by USTR.

ADDRESSES: Comments should be submitted (i) Electronically, to *FR0708@ustr.eop.gov*, with ''China Trading Rights and Distribution Services (DS363)'' in the subject line, or (ii) by fax, to Sandy McKinzy at (202) 395–3640, with a confirmation copy sent electronically to the electronic mail address above, in accordance with the requirements for submission set out below.

FOR FURTHER INFORMATION CONTACT: Steven F. Fabry, Associate General Counsel, Office of the United States Trade Representative, 600 17th Street, NW., Washington, DC, (202) 395–3150.

SUPPLEMENTARY INFORMATION: Section 127(b) of the Uruguay Round Agreements Act (URAA) (19 U.S.C. 3537(b)(1)) requires that notice and opportunity for comment be provided after the United States submits or receives a request for the establishment of a WTO dispute settlement panel. In an effort to provide additional opportunity for comment, USTR is providing notice that consultations have been requested pursuant to the WTO Understanding on Rules and Procedures Governing the Settlement of Disputes (''DSU''). If such consultations should fail to resolve the matter and a dispute settlement panel is established pursuant to the DSU, such panel, which would hold its meetings in Geneva, Switzerland, would be expected to issue a report on its findings and recommendations within nine months after it is established.

Major Issues Raised by the United States

On April 10, 2007, the United States requested consultations with China with respect to certain measures pertaining to the protection and enforcement of intellectual property rights in China.

The first matter on which the United States has requested consultations concerns certain measures of China that reserve to certain Chinese state-designated and wholly or partially state-owned enterprises the right to import films for theatrical release, audiovisual home entertainment products (*e.g.*, video cassettes and DVDs), sound recordings, and publications (*e.g.*, books, magazines, newspapers, and electronic publications). In this regard, the measures at issue include the following, as well as any amendments and related or implementing measures:

- The Regulations on Administration of the Films Industry;
- The Provisional Rules on the Entry Criteria for Operating Film Enterprises;
- The Administrative Regulation on Publishing;
- The Administrative Regulations on Audiovisual Products;
- The Catalogue for Guidance of Foreign Investment Industries;
- The Several Opinions of the Ministry of Culture, State Administration of Radio, Film and Television, General Administration of Press and Publication, National Development and Reform Commission and the Ministry of Commerce on Introducing Foreign Investment into the Cultural Sector;
- The Measures for the Administration of Import of Audio and Video Products;
- The Measures for Administration of Chinese Foreign Contractual Distribution Ventures of Audiovisual Products;
- The Administrative Regulations on Electronic Publications; and
- The Procedure for Examination and Approval of Establishment of Publication Importation Entities.

It appears that these measures do not allow all Chinese enterprises and all foreign enterprises and individuals to have the right to import the Products into the customs territory of China. It also appears that foreign individuals and enterprises, including those not invested or registered in China, are accorded treatment less favorable than that accorded to enterprises in China with respect to the right to trade. These measures appear to USTR to be inconsistent with China's obligations under paragraphs 1.2, 5.1 and 5.2 of Part I of the Protocol on the Accession of the People's Republic of China and Article XI:1 of the General Agreement on Tariffs and Trade 1994.

The second matter on which the United States has requested consultations concerns certain measures of China that impose market access restrictions or discriminatory limitations on foreign service providers seeking to engage in the distribution of publications and certain audiovisual home entertainment products. In this regard, the measures at issue include the following, as well as any amendments and related or implementing measures:

- The Administrative Regulation on Publishing;
- The Administrative Regulations on Audiovisual Products;
- The Provisions on Guiding the Orientation of Foreign Investment;
- The Catalogue for Guidance of Foreign Investment Industries;
- The Several Opinions of the Ministry of Culture, State Administration of Radio, Film and Television, General Administration of Press and Publication, National Development and Reform Commission and the Ministry of Commerce on Introducing Foreign Investment into the Cultural Sector;
- The Administrative Regulations on Management of Foreign-Invested Book, Magazine and Newspaper Distribution Enterprises;
- The Administrative Regulations on the Publication Market (revised);
- The Administrative Regulations on Electronic Publications;
- The Administrative Measures on Subscription of Imported Publications;
- The Procedure for Examination and Approval of Establishment of Chinese-Foreign Entities, Cooperative Joint Ventures, and Wholly Foreign Owned Publication Distribution Enterprises; and

• The Measures for Administration of Chinese Foreign Contractual Distribution Ventures of Audiovisual Products.

It appears that these measures prohibit foreign service suppliers (including wholly or partially foreign-owned or foreign-invested enterprises) from engaging at least in certain types of distribution of publications and audiovisual home entertainment products within China. In addition, to the extent that some foreign service suppliers are allowed to engage in some aspects of the distribution of publications, there appear to be discriminatory requirements concerning such suppliers' registered capital, such suppliers' operating term, and the particular publications that such suppliers may distribute. Furthermore, to the extent that foreign services suppliers are permitted to engage in any distribution of audiovisual home entertainment products, the measures at issue appear to impose requirements that the service be supplied through a form of entity that Chinese persons control, or in which Chinese persons have a dominant position, or for which there is a limitation on the participation of foreign capital. These measures appear to USTR to be inconsistent with China's obligations under Articles XVI and XVII of the General Agreement on Trade in Services.

Public Comment: Requirements for Submissions

Interested persons are invited to submit written comments concerning the issues raised in the dispute. Comments should be submitted (I) Electronically, to *FR0708@ustr.eop.gov*, with ''China Trading Rights and Distribution Services (DS363)'' in the subject line, or (ii) by fax, to Sandy McKinzy at (202) 395–3640, with a confirmation copy sent electronically to the electronic mail address above.

USTR encourages the submission of documents in Adobe PDF format as attachments to an electronic mail. Interested persons who make submissions by electronic mail should not provide separate cover letters; information that might appear in a cover letter should be included in the submission itself. Similarly, to the extent possible, any attachments to the submission should be included in the same file as the submission itself, and not as separate files.

Comments must be in English. A person requesting that information contained in a comment submitted by that person be treated as confidential business information must certify that such information is business confidential and would not customarily be released to the public by the commenter. Confidential business information must be clearly designated as such and ''BUSINESS CONFIDENTIAL'' must be marked at the top and bottom of the cover page and each succeeding page. Persons who submit confidential business information are encouraged also to provide a non-confidential summary of the information.

Information or advice contained in a comment submitted, other than business confidential information, may be determined by USTR to be confidential in accordance with section 135(g)(2) of the Trade Act of 1974 (19 U.S.C. 2155(g)(2)). If the submitter believes that information or advice may qualify as such, the submitter—

(1) Must clearly so designate the information or advice;

(2) Must clearly mark the material as ''SUBMITTED IN CONFIDENCE'' at the top and bottom of the cover page and each succeeding page; and

(3) Is encouraged to provide a non-confidential summary of the information or advice.

Pursuant to section 127(e) of the URAA (19 U.S.C. 3537(e)), USTR will maintain a file on this dispute settlement proceeding, accessible to the public, in the USTR Reading Room, which is located at 1724 F Street, NW., Washington, DC 20508. The public file will include non-confidential comments received by USTR from the public with respect to the dispute; if a dispute settlement panel is convened or in the event of an appeal from such a panel, the U.S. submissions; the submissions, or non-confidential summaries of submissions, received from other participants in the dispute; the report of the panel; and, if applicable, the report of the Appellate Body. The USTR Reading Room is open to the public, by appointment only, from 10 a.m. to noon and 1 p.m. to 4 p.m., Monday through Friday. An appointment to review the public file (Docket WTO/DS–363, China Trading Rights and Distribution Services Dispute) may be made by calling the USTR Reading Room at (202) 395–6186.

Daniel Brinza,

Assistant United States Trade Representative for Monitoring and Enforcement.

[FR Doc. E7–7606 Filed 4–20–07; 8:45 am]

BILLING CODE 3190–W7–P

OFFICE OF THE UNITED STATES TRADE REPRESENTATIVE

[Docket No. WTO/DS–362]

WTO Dispute Settlement Proceeding Regarding China—Measures Affecting the Protection and Enforcement of Intellectual Property Rights

AGENCY: Office of the United States Trade Representative.

ACTION: Notice; request for comments.

SUMMARY: The Office of the United States Trade Representative (USTR) is providing notice that on April 10, 2007, in accordance with the Marrakesh Agreement Establishing the World Trade Organization (WTO Agreement), the United States requested consultations with respect to certain measures pertaining to the protection and enforcement of intellectual property rights in China. That request may be found at *http://www.wto.org* contained in a document designated as WT/DS362/1. USTR invites written comments from the public concerning the issues raised in this dispute.

DATES: Although USTR will accept any comments received during the course of the consultations, comments should be submitted on or before May 7, 2007 to be assured of timely consideration by USTR.

ADDRESSES: Comments should be submitted (i) Electronically, to *FR0707@ustr.eop.gov,* with ''China IPR Protection and Enforcement (DS362)'' in the subject line, or (ii) by fax, to Sandy McKinzy at (202) 395–3640, with a confirmation copy sent electronically to the electronic mail address above, in accordance with the requirements for submission set out below.

FOR FURTHER INFORMATION CONTACT: Steven F. Fabry, Associate General Counsel, Office of the United States Trade Representative, 600 17th Street, NW., Washington, DC, (202) 395–3150.

SUPPLEMENTARY INFORMATION: Section 127(b) of the Uruguay Round Agreements Act (URAA) (19 U.S.C. 3537(b)(1)) requires that notice and opportunity for comment be provided after the United States submits or receives a request for the establishment of a WTO dispute settlement panel. In an effort to provide additional opportunity for comment, USTR is providing notice that consultations have been requested pursuant to the WTO Understanding on Rules and Procedures Governing the Settlement of Disputes (''DSU''). If such consultations should fail to resolve the matter and a dispute settlement panel is established pursuant to the DSU, such panel, which would

hold its meetings in Geneva, Switzerland, would be expected to issue a report on its findings and recommendations within nine months after it is established.

Major Issues Raised by the United States

On April 10, 2007, the United States requested consultations with China with respect to certain measures pertaining to the protection and enforcement of intellectual property rights in China.

The first matter on which the United States has requested consultations concerns the thresholds that must be met in order for certain acts of trademark counterfeiting and copyright piracy to be subject to criminal procedures and penalties. In this regard, the measures at issue include the following, as well as any amendments and related or implementing measures: the Criminal Law of the People's Republic of China, in particular Articles 213, 214, 215, 217, 218, and 220; and two interpretations by the Supreme People's Court and the Supreme People's Procuratorate on several issues of concrete application of law in handling criminal cases of infringing intellectual property (one adopted on November 2, 2004, and the other adopted on April 4, 2007). It appears that, because of these measures, certain acts of trademark counterfeiting and copyright piracy occurring on a commercial scale in China are not subject to criminal procedures and penalties in China. These measure appear to USTR to be inconsistent with China's obligations under Articles 41.1 and 61 of the Agreement on Trade-Related Aspects of Intellectual Property Rights (''TRIPS Agreement'').

The second matter on which the United States has requested consultations concerns goods that infringe intellectual property rights that are confiscated by Chinese customs authorities, in particular the disposal of such goods following removal of their infringing features. In this regard, the measures at issue include the following, as well as any amendments and related or implementing measures: the Regulations of the People's Republic of China for Customs Protection of Intellectual Property Rights, in particular Chapter 4 thereof, and the Implementing Measures of Customs of the People's Republic of China for the Regulations of the People's Republic of China on Customs Protection of Intellectual Property Rights, in particular Chapter 5 thereof. It appears that, because of these measures, the customs authorities often appear to be required to give priority to options for disposal of goods that infringe intellectual property rights that would allow such goods to enter the channels of commerce (for instance, through auctioning the goods after removing their infringing features). The requirement that infringing goods be released into the channels of commerce under the circumstances set forth in the measures at issue appears to USTR to be inconsistent with China's obligations under Articles 46 and 59 of the TRIPS Agreement.

The third matter on which the United States has requested consultations concerns the denial of copyright and related rights protection and enforcement to creative works of authorship, sound recordings, and performances that have not been authorized for publication or distribution within China. For example, it appears that works that are required to undergo censorship review (or other forms of pre-publication or pre-distribution review) before entering the Chinese market are not protected by copyright before the review is complete and publication and distribution within China has been authorized. In this regard, the measures at issue include the following, as well as any amendments and related or implementing measures:

- The Copyright Law, in particular Article 4;
- The Criminal Law, the Regulations on the Administration of Publishing Industry, the Regulations on the Administration of Broadcasting, the Regulations on the Administration of Audiovisual Products, the Regulations on the Administration of films, and the Regulations on the Administration of Telecommunication;
- The Administrative Regulations on Audiovisual Products;
- The Administrative Regulation on Publishing;
- The Administrative Regulations on Electronic Publications;
- The Measures for the Administration of Import of Audio and Video Products;
- The Procedures for Examination and Approval for Publishing Finished Electronic Publication Items Licensed by a Foreign Copyright Owner;
- The Procedures for Examination and Approval of Importation of Finished Electronic Publication Items by Electronic Publication Importation Entities;
- The Procedures for Recording of Imported Publications;
- The Interim Regulations on Internet Culture Administration; and
- The Several Opinions on the Development and Regulation of Network Music.

It appears that, because of the Copyright Law, authors of works whose publication or distribution has not been authorized (and whose publication or distribution is therefore prohibited) appear not to enjoy the minimum standards of protection specially granted by the Berne Convention for the Protection of Literary and Artistic Works (1971) (the ''Berne Convention'') in respect of those works (and may never enjoy such protection if the work is not authorized, or is not authorized for distribution or publication in the form as submitted for review). In addition, the rights of authors of works whose publication or distribution is required to undergo pre-publication or pre-distribution review appear to be subject to the formality of successful conclusion of such review. The foregoing appears to USTR to be inconsistent with China's obligations under Articles 9.1 and 41.1 of the TRIPS Agreement. Furthermore, to the extent that the Copyright Law also denies the protection of certain rights to performers and producers of sound recordings during the period of any pre-publication or pre-distribution prohibition, the Copyright Law appears to be inconsistent with China's obligations under Articles 14 and 41.1 of the TRIPS Agreement.

In addition, it appears that the measures at issue provide different pre-distribution and pre-authorization review processes for Chinese nationals' works, performances (or their fixations) and sound recordings than for foreign nationals' works, performances (or their fixations) and sound recordings. To the extent that these different processes, taken together with Article 4 of the Copyright Law, result in earlier or otherwise more favorable protection or enforcement of copyright or related rights for Chinese authors' works, Chinese performers' performances (or their fixations) and Chinese producers' sound recordings than for foreign authors' works, foreign performers' performances (or their fixations) and foreign producers' sound recordings, the measures at issue appear to be inconsistent with China's obligations under TRIPS Agreement Articles 3.1, 9.1 and 41.1.

The fourth matter on which the United States has requested consultations concerns the scope of coverage of criminal procedures and penalties for unauthorized reproduction or unauthorized distribution of copyrighted works. In particular, it appears that unauthorized reproduction of copyrighted works by itself—that is, unauthorized reproduction that is not accompanied by unauthorized

distribution—may not be subject to criminal procedures and penalties. Likewise, it appears that unauthorized distribution of copyrighted works by itself—that is, unauthorized distribution that is not accompanied by unauthorized reproduction—may not be subject to criminal procedures and penalties. In this regard, the measures at issue include the Criminal Law, in particular Article 217, as well as any amendments, related measures, or implementing measures. To the extent that wilful copyright piracy on a commercial scale that consists of unauthorized reproduction—but not unauthorized distribution—of copyrighted works, and *vice versa,* may not be subject to criminal procedures and penalties under the law of China, this would appear to USTR to be inconsistent with China's obligations under Articles 41.1 and 61 of the TRIPS Agreement.

Public Comment: Requirements for Submissions

Interested persons are invited to submit written comments concerning the issues raised in the dispute. Comments should be submitted (I) Electronically, to *FR0707@ustr.eop.gov,* with ''China IPR Protection and Enforcement (DS362)'' in the subject line, or (ii) by fax, to Sandy McKinzy at (202) 395–3640, with a confirmation copy sent electronically to the electronic mail address above.

USTR encourages the submission of documents in Adobe PDF format as attachments to an electronic mail. Interested persons who make submissions by electronic mail should not provide separate cover letters; information that might appear in a cover letter should be included in the submission itself. Similarly, to the extent possible, any attachments to the submission should be included in the same file as the submission itself, and not as separate files.

Comments must be in English. A person requesting that information contained in a comment submitted by that person be treated as confidential business information must certify that such information is business confidential and would not customarily be released to the public by the commenter. Confidential business information must be clearly designated as such and ''BUSINESS CONFIDENTIAL'' must be marked at the top and bottom of the cover page and each succeeding page. Persons who submit confidential business information are encouraged also to provide a non-confidential summary of the information.

Information or advice contained in a comment submitted, other than business confidential information, may be determined by USTR to be confidential in accordance with section 135(g)(2) of the Trade Act of 1974 (19 U.S.C. 2155(g)(2)). If the submitter believes that information or advice may qualify as such, the submitter—

(1) Must clearly so designate the information or advice;

(2) Must clearly mark the material as ''SUBMITTED IN CONFIDENCE'' at the top and bottom of the cover page and each succeeding page; and

(3) Is encouraged to provide a non-confidential summary of the information or advice.

Pursuant to section 127(e) of the URAA (19 U.S.C. 3537(e)), USTR will maintain a file on this dispute settlement proceeding, accessible to the public, in the USTR Reading Room, which is located at 1724 F Street, NW., Washington, DC 20508. The public file will include non-confidential comments received by USTR from the public with respect to the dispute; if a dispute settlement panel is convened or in the event of an appeal from such a panel, the U.S. submissions; the submissions, or non-confidential summaries of submissions, received from other participants in the dispute; the report of the panel; and, if applicable, the report of the Appellate Body. The USTR Reading Room is open to the public, by appointment only, from 10:00 a.m. to noon and 1 p.m. to 4 p.m., Monday through Friday. An appointment to review the public file (Docket WTO/DS–362, China IPR Protection and Enforcement Dispute) may be made by calling the USTR Reading Room at (202) 395–6186.

Daniel Brinza,

Assistant United States Trade Representative for Monitoring and Enforcement.

[FR Doc. E7–7612 Filed 4–20–07; 8:45 am]

BILLING CODE 3190–W7–P

OFFICE OF PERSONNEL MANAGEMENT

Excepted Service

AGENCY: Office of Personnel Management (OPM).

ACTION: Notice.

SUMMARY: This gives notice of OPM decisions granting authority to make appointments under Schedules A, B, and C in the excepted service as required by 5 CFR 6.6 and 213.103.

FOR FURTHER INFORMATION CONTACT: C. Penn, Executive Resources Services Group, Center for Human Resources, Division for Human Capital Leadership and Merit System Accountability, 202–606–2246.

SUPPLEMENTARY INFORMATION: Appearing in the listing below are the individual authorities established under Schedules A, B, and C between March 1, 2007, and March 31, 2007. Future notices will be published on the fourth Tuesday of each month, or as soon as possible thereafter. A consolidated listing of all authorities as of June 30 is published each year.

Schedule A

Section 213.3170 Millennium Challenge Corporation

(a) All positions established to create the Millennium Challenge Corporation. No new appointments may be made under this authority after September 30, 2007. Effective April 1, 2007.

Schedule B

No Schedule B appointments were approved for March 2007.

Schedule C

The following Schedule C appointments were approved during March 2007.

Section 213.3303 Executive Office of the President

Office of Science and Technology Policy

TSGS60046 Assistant Director for Telecommunications and Information Technology to the Chief of Staff and General Counsel. Effective March 09, 2007.

TSGS60047 Deputy Chief of Staff and Associate General Counsel to the Chief of Staff and General Counsel. Effective March 09, 2007.

Office of National Drug Control Policy

QQGS70004 Public Affairs Specialist (Media Campaign) to the Associate Director for Public Affairs. Effective March 09, 2007.

QQGS70005 Confidential Assistant to the Deputy Director for Supply Reduction. Effective March 13, 2007.

Section 213.3304 Department of State

DSGS61217 Public Affairs Specialist to the Assistant Secretary for Public Affairs. Effective March 06, 2007.

DSGS61214 Staff Assistant to the Director, Policy Planning Staff. Effective March 09, 2007.

DSGS61220 Senior Advisor to the Assistant Secretary Oceans, International Environment and Science Affairs. Effective March 16, 2007.

DSGS61219 Foreign Affairs Officer to the Assistant Secretary. Effective March 20, 2007.

Section 213.3305 Department of the Treasury

DYGS00488 Executive Assistant to the Special Envoy for China and the Strategic Economic Dialogue. Effective March 09, 2007.

DYGS00489 Operations Coordinator to the Director of Operations. Effective March 15, 2007.

DYGS00424 Senior Advisor to the Assistant Secretary (Economic Policy). Effective March 16, 2007.

DYGS60404 Senior Advisor to the Assistant Secretary (Financial Institutions). Effective March 16, 2007.

DYGS60396 Senior Advisor to the Deputy Assistant Secretary for Business Affairs and Public Liaison. Effective March 28, 2007.

Section 213.3306 Department of Defense

DDGS17019 Defense Fellow to the Special Assistant to the Secretary of Defense for White House Liaison. Effective March 01, 2007.

DDGS17015 Staff Assistant to the Deputy Assistant Secretary of Defense (Detainee Affairs). Effective March 06, 2007.

DDGS17022 Public Affairs Specialist to the Assistant Secretary of Defense Public Affairs. Effective March 12, 2007.

DDGS17012 Public Affairs Specialist to the Assistant Secretary of Defense Public Affairs. Effective March 15, 2007.

DDGS17013 Public Affairs Specialist to the Assistant Secretary of Defense Public Affairs. Effective March 26, 2007.

DDGS17029 Administrative Assistant to the Special Assistant to the Secretary of Defense for White House Liaison. Effective March 27, 2007.

DDGS17023 Public Affairs Specialist to the Assistant Secretary of Defense Public Affairs. Effective March 28, 2007.

DDGS17024 Public Affairs Specialist to the Assistant Secretary of Defense Public Affairs. Effective March 28, 2007.

DDGS17017 Defense Fellow to the Special Assistant to the Secretary of Defense for White House Liaison. Effective March 30, 2007.

Section 213.3307 Department of the Army

DWGS60031 Personal and Confidential Assistant to the General Counsel. Effective March 02, 2007.

Section 213.3308 Department of the Navy

DNGS07110 Confidential Assistant to the Deputy Assistant Secretary of the Navy (Littoral and Mine Warfare Systems). Effective March 02, 2007.

Section 213.3310 Department of Justice

DJGS00127 Chief of Staff and Counsel to the Assistant Attorney General. Effective March 06, 2007.

DJGS00177 Counsel to the Associate Attorney General. Effective March 09, 2007.

DJGS00386 Deputy Director of Scheduling to the Director of Scheduling and Advance. Effective March 28, 2007.

Section 213.3311 Department of Homeland Security

DMGS00642 Special Assistant to the Assistant Commissioner, Congressional Affairs. Effective March 02, 2007.

DMGS00637 Special Assistant to the Chief of Staff. Effective March 07, 2007.

DMGS00645 Special Assistant to the Chief Privacy Officer. Effective March 09, 2007.

DMGS00647 Special Assistant to the Director and Deputy Director to the Under Secretary for Federal Emergency Management. Effective March 09, 2007.

DMGS00643 Supervisory Management and Program Analyst to the Executive Secretary. Effective March 13, 2007.

DMGS00641 Special Assistant to the Chief Medical Officer. Effective March 15, 2007.

DMGS00646 Assistant Press Secretary to the Press Secretary. Effective March 16, 2007.

DMGS00639 Advisor to the Under Secretary for Management to the Chief Human Capital Officer. Effective March 20, 2007.

DMGS00651 Press Assistant to the Press Secretary. Effective March 20, 2007.

DMGS00648 Press Secretary to the Director of External Affairs and Communications. Effective March 26, 2007.

DMGS00652 Director, Ready Campaign to the Assistant Secretary for Public Affairs. Effective March 26, 2007.

DMGS00649 Deputy White House Liaison to the White House Liaison and Advisor. Effective March 27, 2007.

DMGS00650 Special Assistant to the Assistant Secretary, Immigration and Customs Enforcement. Effective March 28, 2007.

DMGS00635 Associate General Counsel for Immigration, Enforcement, and Special Counsel to the General Counsel. Effective March 30, 2007.

Section 213.3312 Department of the Interior

DIGS01087 Special Assistant to the Senior Adviser to the Secretary for Alaskan Affairs. Effective March 19, 2007.

DIGS01098 Deputy Press Secretary to the Director, Office of Communications. Effective March 30, 2007.

Section 213.3313 Department of Agriculture

DAGS00882 Chief of Staff to the Chief, Natural Research Conservation Service. Effective March 05, 2007.

DAGS00883 Special Assistant to the Chief, Natural Research Conservation Service. Effective March 09, 2007.

DAGS00884 Confidential Assistant to the Under Secretary for Marketing and Regulatory Programs. Effective March 19, 2007.

DAGS00885 Confidential Assistant to the Administrator, Food and Nutrition Service. Effective March 29, 2007.

Section 213.3314 Department of Commerce

DCGS00048 Confidential Assistant to the Deputy Under Secretary and Deputy Director of U.S. Patent and Trademark Office. Effective March 02, 2007.

DCGS00264 Special Assistant to the Assistant Secretary for Economic Development. Effective March 02, 2007.

DCGS00520 Special Assistant to the Executive Director for Trade Promotion and Outreach. Effective March 02, 2007.

DCGS00614 Special Assistant to the Executive Director for Trade Promotion and Outreach. Effective March 02, 2007.

DCGS60532 Senior Counsel to the General Counsel. Effective March 02, 2007.

DCGS00547 Confidential Assistant to the Deputy Under Secretary and Deputy Director of U.S. Patent and Trademark Office. Effective March 06, 2007.

DCGS00412 Special Assistant to the Assistant Secretary for Import Administration. Effective March 09, 2007.

DCGS06017 Senior Legislative Counsel to the General Counsel. Effective March 09, 2007.

DCGS00328 Special Assistant to the Director, Advocacy Center. Effective March 15, 2007.

DCGS00380 Confidential Assistant to the Chief of Staff to the Under Secretary, International Trade Administration. Effective March 15, 2007.

DCGS00590 Confidential Assistant to the Director, Executive Secretariat. Effective March 15, 2007.

DCGS00344 Public Affairs Specialist to the Director of Public Affairs. Effective March 30, 2007.

Section 213.3315 Department of Labor

DLGS60267 Special Assistant to the Assistant Secretary for Public Affairs. Effective March 02, 2007.

DLGS60233 Senior Advisor to the Assistant Secretary for Employment Standards. Effective March 28, 2007.

Section 213.3316 Department of Health and Human Services

DHGS60255 Regional Director, Chicago, Illinois-Region V to the Director of Intergovernmental Affairs. Effective March 02, 2007.

Section 213.3317 Department of Education

DBGS00599 Special Assistant to the Secretary's Regional Representative. Effective March 06, 2007.

DBGS00604 Deputy Director, Office of International Affairs to the Director, International Affairs Office. Effective March 15, 2007.

DBGS00603 Secretary's Regional Representative, Region IX to the Director, Regional Services. Effective March 20, 2007.

DBGS00606 Secretary's Regional Representative, Region 3 to the Director, Regional Services. Effective March 22, 2007.

DBGS00607 Confidential Assistant to the Assistant Secretary for Special Education and Rehabilitative Services. Effective March 22, 2007.

Section 213.3318 Environmental Protection Agency

EPGS07000 Deputy Press Secretary to the Associate Administrator for Public Affairs. Effective March 09, 2007.

EPGS07001 Program Advisor to the Associate Administrator for Public Affairs. Effective March 28, 2007.

EPGS07002 Assistant to the Scheduler to the Director of Scheduling. Effective March 28, 2007.

Section 213.3323 Federal Communications Commission

FCGS07077 Associate Director-Senior Speechwriter to the Chairman. Effective March 30, 2007.

Section 213.3330 Securities and Exchange Commission

SEOT60054 Secretary to the Director, Division of Market Regulation. Effective March 07, 2007.

Section 213.3331 Department of Energy

DEGS00567 Deputy Director, Public Affairs to the Director, Public Affairs. Effective March 02, 2007.

DEGS00563 Special Assistant to the Assistant Secretary for Congressional and Intergovernmental Affairs. Effective March 06, 2007.

DEGS00565 Special Assistant, Deputy Director of Scheduling and Advance to the Director, Office of Scheduling and Advance. Effective March 06, 2007.

DEGS00572 Policy Advisor to the Deputy Assistant Secretary for International Affairs. Effective March 06, 2007.

DEGS00574 Deputy Assistant Secretary for Nuclear Energy and Science to the Assistant Secretary for Congressional and Intergovernmental Affairs. Effective March 06, 2007.

DEGS00571 Special Assistant to the Director, Office of Science. Effective March 09, 2007.

DEGS00576 Intergovernmental Liaison Officer to the Assistant Secretary for Congressional and Intergovernmental Affairs. Effective March 15, 2007.

DEGS00577 Staff Assistant to the Director, Office of Scheduling and Advance. Effective March 15, 2007.

DEGS00575 Director of Intergovernmental and Tribal Affairs to the Deputy Assistant Secretary for Intergovernmental and External Affairs. Effective March 20, 2007.

DEGS00579 Senior Policy Advisor to the Deputy Administrator for Defense Nuclear Nonproliferation. Effective March 29, 2007.

Section 213.3332 Small Business Administration

SBGS00612 Deputy Assistant Administrator for Faith Based Community Initiatives to the Director of SBA's Center for Faith-Based and Community Initiatives. Effective March 02, 2007.

SBGS00576 Deputy Associate Administrator for Office of Communications and Public Liaison to the Associate Administrator for Communications and Public Liaison. Effective March 16, 2007.

SBGS00613 Legislative Assistant to the Assistant Administrator for Congressional and Legislative Affairs. Effective March 16, 2007.

Section 213.3333 Federal Deposit Insurance Corporation

FDOT00012 Director for Public Affairs to the Chairman of the Board of Directors (Director). Effective March 30, 2007.

Section 213.3339 United States International Trade Commission

TCGS60005 Staff Assistant (Legal) to a Commissioner. Effective March 23, 2007.

TCGS60006 Staff Assistant (Legal) to a Commissioner. Effective March 23, 2007.

TCGS60025 Staff Assistant (Legal) to a Commissioner. Effective March 23, 2007.

Section 213.3356 Commission on Civil Rights

CCGS60020 Special Assistant to the Commissioner to the Chairman. Effective March 28, 2007.

Section 213.3384 Department of Housing and Urban Development

DUGS60232 Staff Assistant to the Assistant Deputy Secretary for Field Policy and Management. Effective March 09, 2007.

DUGS60289 Special Policy Advisor to the Assistant Secretary for Community Planning and Development. Effective March 16, 2007.

Section 213.3394 Department of Transportation

DTGS60450 Deputy Director for Scheduling and Advance to the Secretary. Effective March 06, 2007.

DTGS60017 Assistant to the Secretary for Policy. Effective March 09, 2007.

DTGS60139 Special Assistant to the Deputy Secretary. Effective March 12, 2007.

DTGS60451 Director of Communications to the Administrator. Effective March 30, 2007.

Section 213.3396 National Transportation Safety Board

TBGS71193 Confidential Assistant to a Member. Effective March 02, 2007.

Authority: 5 U.S.C. 3301 and 3302; E.O. 10577, 3 CFR 1954–1958 Comp., p. 218.

Office of Personnel Management.

Tricia Hollis,

Chief of Staff/Director of External Affairs.

[FR Doc. E7–7609 Filed 4–20–07; 8:45 am]

BILLING CODE 6325–39–P

POSTAL SERVICE

Sunshine Act Meeting

DATE AND TIME: Tuesday, May 1, 2007, at 2:30 p.m.; and Wednesday, May 2, 2007, at 8:30 a.m. and 10:30 a.m.

PLACE: Washington, DC, at U.S. Postal Service Headquarters, 475 L'Enfant Plaza, SW., in teh Benjamin Franklin Room.

STATUS: May 1—2:30 p.m.—Closed; May 2—8:30 a.m.—Open; May 2—10:30 a.m.—Closed.

MATTERS TO BE CONSIDERED:

Tuesday, May 1 at 2:30 p.m. (Closed)

1. Strategic Issues.
2. Rate Case Update.
3. Financial Update.
4. Labor Negotiations Update.
5. Personnel Matters and Compensation Issues.
6. Governors' Executive Session—Discussion of prior agenda items and Board Governance.

Wednesday, May 2 at 8:30 a.m. (Open)

1. Minutes of the Previous Meetings, January 9–10; February 27; March 6, 14, 16, 19 and 28, 2007.

Remarks of the Chairman and Vice Chairman of the Board.

3. Remarks of the Postmaster General and CEO Jack Potter.
4. Committee Reports.
5. Board of Governors Bylaw Amendments.
6. Capital Investment.

a. Additional Delivery Bar Code Sorters and Stacker Modules.

7. Quarterly Report on Service Performance.
8. Quarterly Report on Finance Performance.
9. Integrated Financial Plan Addendum.
10. Tentative Agenda for the June 19–20, 2007, meeting in Washington, DC.

Wednesday, May 2 at 10:30 a.m. (Closed)—if Needed

1. Continuation of Tuesday's closed session agenda.

CONTACT PERSON FOR MORE INFORMATION: Wendy A. Hocking, Secretary of the Board, U.S. Postal Service, 475 L'Enfant Plaza, SW., Washington, DC 20260–1000. Telephone (202) 268–4800.

Wendy A. Hocking,

Secretary.

[FR Doc. 07–2040 Filed 4–19–07; 3:40 pm]

BILLING CODE 7710–12–M

RAILROAD RETIREMENT BOARD

Computer Matching and Privacy Protection Act of 1988; Records Used in Computer Matching Programs

AGENCY: Railroad Retirement Board (RRB).

ACTION: Notice of records used in computer matching programs notification to individuals who are receiving or have received benefits under the Railroad Unemployment Insurance Act.

SUMMARY: As required by the Computer Matching and Privacy Protection Act of 1988, the RRB is issuing a public notice of its use and intent to use, in ongoing computer matching programs, certain information obtained from state agencies with respect to individuals who received benefits under the Railroad Unemployment Insurance Act. The information may consist of either (1) report of unemployment or sickness payments made by the state for the same period that benefits were paid by the RRB or (2) wages and names and addresses of employers who reported wages to the state for the same period that benefits were paid by the RRB.

The purpose of this notice is to advise individuals applying for or receiving benefits under the Railroad Unemployment Insurance Act of the use made by the RRB of this information obtained from state agencies by means of a computer match.

DATES: Submit comments on or before June 22, 2007.

ADDRESSES: Address any comments concerning this notice to Beatrice Ezerski, Secretary to the Board, Railroad Retirement Board, 844 North Rush Street, Chicago, Illinois 60611–2092.

FOR FURTHER INFORMATION CONTACT: Ms. Mary Prosser, Railroad Retirement Board, 844 North Rush Street, Chicago, Illinois 60611–2092, telephone number (312) 751–4965.

SUPPLEMENTARY INFORMATION: Under certain circumstances, the Computer Matching and Privacy Protection Act of 1988, Pub. L. 100–503, requires a Federal agency participating in a computer matching program to publish a notice in the **Federal Register** regarding the establishment of that matching program. Such a notice must include information in the following first five categories:

Name of Participating Agencies: The Railroad Retirement Board and agencies of all 50 states.

Purpose of the Match: To identify individuals who have improperly collected benefits provided by the RRB while earning remuneration in non-railroad employment or while collecting unemployment or sickness benefits paid by a state agency.

Authority for Conducting the Match: 45 U.S.C. Sections 231(b) and 362(f) and 42 U.S.C. Section 503(c)(1).

Categories of Records and Individuals Covered: All recipients of benefits under the Railroad Unemployment Insurance Act during a given period who reside in the states with which the RRB has negotiated a matching program agreement. Records furnished by the states are covered under Privacy Act system of records RRB–21, Railroad Unemployment and Sickness Insurance Benefit System.

Inclusive Dates of the Matching Program: Agreements with the individual states will run for either 12 or 18 months. The number of matches conducted with each state during the period of the match will vary from state to state, ranging from 2 to 4 depending on whether the agreement provides for matches to be conducted quarterly or every six months.

Procedure: The RRB will furnish the state agency a file of records. The data elements will consist of beneficiary identifying information, such as the name and Social Security Number (SSN), as well as the overall period during which the individual received benefits under the Railroad Unemployment Insurance. The state agency will match on the identifying information.

If the matching operation reveals that the individual who had received benefits under the Railroad Unemployment Insurance Act also received either unemployment or sickness insurance benefits from the state for any days in the period, the state agency will notify the RRB. Depending on arrangements made between the two jurisdictions, and, in the case of state sickness benefits on the applicable state law, either the RRB or the state agency will attempt to recover the amount of the duplicate payments.

If the matching operation reveals that wages had been reported for the individual during the requested period, the state will notify the RRB of this fact and furnish a breakdown of the wages and the name and address of each employer who reported earnings for the individual. The RRB will then write each employer who reported earnings for the individual for the given period. Only if the employment is verified will the RRB take action to recover the overpayment. If the RRB benefits had been paid under the Railroad Unemployment Insurance Act, recovery is limited to payments made for days on

which the individual was gainfully employed.

Other information: The notice we are giving here is in addition to any individual notice.

A copy of this notice will be furnished to both Houses of Congress and the Office of Management and Budget.

Dated: April 17, 2007.

By Authority of the Board.

Beatrice Ezerski,

Secretary to the Board.

[FR Doc. E7–7653 Filed 4–20–07; 8:45 am]

BILLING CODE 7905–01–P

SECURITIES AND EXCHANGE COMMISSION

Submission for OMB Review; Comment Request

Upon Written Request, Copies Available From: Securities and Exchange Commission, Office of Filings and Information Services, Washington, DC 20549.

Extension: Rule 10b–10, SEC File No. 270–389, OMB Control No. 3235–0444.

Notice is hereby given that pursuant to the Paperwork Reduction Act of 1995 (44 U.S.C. 3501 *et seq.*) the Securities and Exchange Commission (''Commission'') has submitted to the Office of Management and Budget a request for extension of the previously approved collection[s] of information discussed below.

- **Rule 10b–10, Confirmation of Transactions**

Rule 10b–10 (17 CFR 240.10b–10) of the Securities Exchange Act of 1934 (17 U.S.C. 78a *et seq.*) requires broker-dealers to convey basic trade information to customers regarding their securities transactions. This information includes: the date and time of the transaction, the identity and number of shares bought or sold, and the trading capacity of the broker-dealer. Depending on the trading capacity of the broker-dealer, Rule 10b–10 requires the disclosure of commissions as well as mark-up and mark-down information. For transactions in debt securities, Rule 10b–10 requires the disclosure of redemption and yield information. Rule 10b–10 potentially applies to all of the approximately 6,014 firms registered with the Commission that effect transactions on behalf of customers.

The confirmations required by Rule 10b–10 are generally processed through automated systems. It takes approximately 1 minute to generate and send a confirmation. It is estimated that broker-dealers spend 77.4 million hours per year complying with Rule 10b–10.

The Commission staff estimates the costs of producing and sending a paper confirmation, including postage to be approximately 91 cents. The Commission staff also estimates that the cost of producing a sending a wholly electronic confirmation is approximately 52 cents. The amount of confirmations sent and the cost of sending each confirmation varies from firm to firm. Smaller firms generally send fewer confirmations than larger firms because they effect fewer transactions.

An agency may not conduct or sponsor, and a person is not required to respond to, a collection of information unless it displays a currently valid control number.

General comments regarding the estimated burden hours should be directed to the following persons: (i) Desk Officer for the Securities and Exchange Commission, Office of Information and Regulatory Affairs, Office of Management and Budget, Room 10102, New Executive Office Building, Washington, DC 20503 or send an e-mail to: *David_Rostker@omb.eop.gov* and (ii) R. Corey Booth, Director/Chief Information Officer, Securities and Exchange Commission, c/o Shirley Martinson, 6432 General Green Way, Alexandria VA 22312 or send an e-mail to: *PRA_Mailbox@sec.gov*. Comments must be submitted to OMB within 30 days of this notice.

Dated: April 16, 2007.

Florence E. Harmon,

Deputy Secretary.

[FR Doc. E7–7688 Filed 4–20–07; 8:45 am]

BILLING CODE 8010–01–P

SECURITIES AND EXCHANGE COMMISSION

[Release No. 34–55638; File No. SR–NASD–2003–141]

Self-Regulatory Organizations: National Association of Securities Dealers, Inc.; Order Granting Approval to Proposed Rule Change Relating to Additional Mark-Up Policy for Transactions in Debt Securities, Except Municipal Securities

April 16, 2007.

I. Introduction

On September 17, 2003, the National Association of Securities Dealers, Inc. (''NASD'') filed with the Securities and Exchange Commission (''SEC'' or ''Commission''), pursuant to Section 19(b)(1) of the Securities Exchange Act of 1934 (''Act'') [1] and Rule 19b–4 thereunder,[2] a proposed rule change to adopt an additional mark-up policy for transactions in debt securities other than municipal securities. NASD filed amendments to the proposed rule change on June 29, 2004 and February 17, 2005.[3] The Commission published the proposed rule change, as amended by Amendment Nos. 1 and 2, for comment in the **Federal Register** on March 15, 2005.[4] The Commission received six comments on the proposal.[5] NASD submitted a response to these comments on October 4, 2005,[6] and filed Amendment Nos. 3, 4, and 5, which also addressed the comments and proposed responsive amendments.[7] Amendment No. 5 replaced the rule filing in its entirety. The proposed rule change, as amended, was published for comment in the **Federal Register** on November 28, 2006.[8] The Commission received four additional comments on the proposal.[9] NASD submitted a response to these additional comments on January 12, 2007.[10] All of the comments received by the Commission in response to Amendment Nos. 3, 4, and 5 are available on the Commission's

[1] 15 U.S.C. 78s(b)(1).

[2] 17 CFR 240.19b–4.

[3] Amendment No. 1 to SR–NASD–2003–141 made technical changes to the original rule filing. Amendment No. 2 to SR–NASD–2003–141 superseded the original rule filing in its entirety.

[4] *See* Securities Exchange Act Release No. 51338 (March 9, 2005), 70 FR 12764 (March 15, 2005).

[5] *See* letters from Paul Scheurer dated April 5, 2005; Micah S. Green, President, and Michele C. David, Vice President and Assistant General Counsel, The Bond Market Association dated April 5, 2005; William C. Caccamise, General Counsel, Banc of America Securities LLC dated April 14, 2005; Edward F. Greene, General Counsel, Corporate and Investment Banking, Citigroup Global Markets Inc. (''CGMI'') dated April 14, 2005; John R. Gimand, Chair, Senior Executives Group, and David L. Murphy, Chair, Joint Buyside/Sellside Regulatory Developments, Senior Executives Group, The Asset Manager's Forum dated June 28, 2005; Debbie Cunningham, Chair, Investor Committee, and Bianca Russo, Chair, Regulatory Committee, American Securitization Forum dated July 26, 2005.

[6] *See* letter from Sharon K. Zackula, Associate General Counsel, NASD dated October 4, 2005.

[7] Amendment Nos. 3 and 4 made technical changes to the rule filing.

[8] *See* Securities Exchange Act Release No. 54799 (Nov. 21, 2006), 71 FR 68856 (Nov. 28, 2006) (''2006 Notice'').

[9] *See* letters from Mary Kuan, Vice President and Assistant General Counsel, Securities Industry and Financial Markets Association (''SIFMA'') dated January 3, 2007 (''SIFMA 1 Letter''); Robbin Conner, Vice President and Assistant General Counsel, SIFMA dated January 4, 2007 (''SIFMA 2 Letter''); Edward F. Greene, General Counsel, Corporate and Investment Banking, CGMI dated January 5, 2007 (''CGMI 2 Letter''); Robyn A. Huffman, Managing Director, Associate General Counsel, Goldman, Sachs & Co. (''Goldman Sachs'') dated January 5, 2007 (''Goldman Sachs Letter'').

[10] *See* letter from Sharon Zackula, Associate General Counsel, NASD dated January 12, 2007.

Internet Web site (*http://www.sec.gov/rules/sro.shtml*). This order approves the proposed rule change, as modified by Amendment Nos. 1 through 5.

II. Background and Description of the Proposal

When a securities dealer acting in a principal capacity sells a security to a customer, the dealer generally ''marks up'' the security, increasing the total price the customer pays. When buying a security from a customer, a dealer acting as a principal generally ''marks down'' the security, reducing the total proceeds the customer receives.[11] NASD Rule 2440, ''Fair Prices and Commissions,'' requires dealers to buy and sell securities at a fair price to customers. NASD IM–2440, ''Mark-Up Policy,'' provides additional guidance on mark-ups, mark-downs, and fair pricing of securities transactions with customers.[12] Both NASD Rule 2440 and IM–2440 apply to all over-the-counter transactions, including transactions in debt securities, and require that when a customer buys a security from a dealer, the customer's total purchase price, and the mark-up included in the price, be fair and reasonable.[13]

The Proposed Interpretation, IM–2440–2, ''Additional Mark-Up Policy for Transactions in Debt Securities, Except Municipal Securities ('Proposed Interpretation'),'' [14] would provide additional guidance on mark-ups in debt securities transactions (other than municipal securities transactions).[15] The Proposed Interpretation particularly addresses a key aspect of determining whether a mark-up is fair and reasonable—correctly identifying the security's prevailing market price. It sets forth a sequence of criteria and procedures that a dealer must consider when determining the prevailing market price. The text of the Proposed Interpretation is available on NASD's Web site (*www.nasd.com*), at NASD's principal office, and at the Commission's Public Reference Room.

A. Presumptive Use of Contemporaneous Cost

The Proposed Interpretation provides that when a dealer calculates a mark-up or mark-down, the best measure of the prevailing market price of the security presumptively is the dealer's contemporaneous cost or proceeds.[16] The dealer may look to countervailing evidence of the prevailing market price only if the dealer, when selling a security, made no contemporaneous purchases in the security or can show that, in the particular circumstances, the dealer's contemporaneous cost is not indicative of the prevailing market price.[17]

For purposes of the Proposed Interpretation with respect to a mark-up, a dealer's cost is considered contemporaneous ''if the transaction occurs close enough in time to the subject transaction that it would reasonably be expected to reflect the current price for the security.'' [18] For a mark-down, a dealer's proceeds are contemporaneous ''if the transaction from which the proceeds result occurs close enough in time to the subject transaction that such proceeds would reasonably be expected to reflect the current market price for the security.''[19]

B. Criteria for Overcoming the Presumption

The Proposed Interpretation recognizes that in some circumstances a dealer may seek to overcome the presumption that its own contemporaneous cost is the prevailing market price of the subject security for determining a mark-up. A dealer may seek to overcome the presumption, and show that contemporaneous cost is not indicative of the prevailing market price, in the following three instances: (i) If interest rates changed enough following the dealer's contemporaneous transaction to reasonably cause a change in the debt security's pricing; (ii) if the credit quality of the debt security changed significantly after the dealer's contemporaneous transaction; or (iii) if news was issued or otherwise distributed, and known to the marketplace, that had an effect on the perceived value of the debt security after the dealer's contemporaneous transaction.[20]

C. Pricing Alternatives to Contemporaneous Cost

When the dealer has established that its cost no longer is contemporaneous, or when the dealer has presented evidence that is sufficient to overcome the presumption that its contemporaneous cost provides the best measure of the prevailing market price, the Proposed Interpretation sets forth a process that the dealer must follow to determine the prevailing market price. In those circumstances, the dealer must first consider a ''Hierarchy'' of three factors in order. The first and most important factor is the pricing of any contemporaneous inter-dealer transactions in the same security.[21] In the absence of contemporaneous inter-dealer trades, the second factor provides that a dealer must consider the prices of contemporaneous dealer purchases in the same security from institutional accounts with which any dealer regularly effects transactions in that security.[22] If contemporaneous inter-dealer trades and dealer-institutional trades in the same security are not available,[23] then the third factor provides that, for actively traded securities, a dealer must look to contemporaneous bid quotations for the security made through an inter-dealer mechanism through which transactions

[11] The terms ''mark-up'' and ''mark-down'' are not found in NASD Rule 2440, but are used in IM–2440. Statements in this order regarding mark-ups also apply generally to mark-downs unless mark-downs are discussed specifically in a separate statement.

[12] For example, IM–2440 provides that an NASD member would violate NASD Rule 2440, as well as NASD Rule 2110 related to standards of commercial honor and principles of trade, if it enters into a transaction with a customer in any security at a price not reasonably related to the security's current market price (or charges an unreasonable commission).

[13] Similarly, when a customer sells a security to a dealer, the customer's total proceeds from the sale, which were reduced by the mark-down, and the mark-down, must be fair and reasonable.

[14] NASD also proposes to re-number IM–2440 as IM–2240–1. Accordingly, IM–2440 is referred to elsewhere in this order as IM–2440–1.

[15] MSRB rule G–30, ''Prices and Commissions,'' applies to transactions in municipal securities, and requires a municipal securities dealer engaging in a transaction as a principal with a customer to buy or sell securities at an aggregate price that is ''fair and reasonable.''

[16] *See* Proposed IM–2440–2(b)(1). For these purposes, the contemporaneous cost or proceeds must be consistent with NASD pricing rules. *See id.* Current IM–2440–1(a)(3) provides: ''In the absence of other bona fide evidence of the prevailing market, a member's own contemporaneous cost is the best indication of the prevailing market price of a security.'' NASD states that contemporaneous cost would not be a reliable indicator of the prevailing market price for purposes of determining a mark-up and mark-down in circumstances where the dealer violates NASD Rule 2320 (Best Execution and Interpositioning) because in those situations the price would not reflect market forces. *See* 2006 Notice at n.15.

[17] *See* Proposed IM–2440–2(b)(2). When buying a security from a customer, the dealer may look to countervailing evidence of the prevailing market price only if the dealer made no contemporaneous sales in the security or can show that in the particular circumstances the dealer's contemporaneous proceeds are not indicative of the prevailing market price. *See id.*

[18] *See* Proposed IM–2440–2(b)(3).

[19] *See id.*

[20] *See* Proposed IM–2440–2(b)(4).

[21] *See* Proposed IM–2440–2(b)(5)(A).

[22] *See* Proposed IM–2440–2(b)(5)(B). Contemporaneous dealer sales with those institutional accounts would be used to calculate a mark-down.

[23] NASD has explained that if a dealer has overcome the presumption by establishing, for example, that the credit quality of the security changed significantly after the dealer's trade, any inter-dealer or dealer-institutional trades in the same security that occurred prior to the change in credit quality would not be valid measures of the prevailing market price because such transactions would be subject to the same defect. *See* 2006 Notice at n.30.

generally occur at the displayed quotations.[24]

The Proposed Interpretation further provides that the relative weight to be given to the comparison transactions or quotations discussed above depends on the facts and circumstances, including whether the dealer in the comparison transaction was on the same side of the market as the dealer is in the subject transaction and the timeliness of the information.[25]

D. Additional Alternatives to Contemporaneous Cost

If none of the above three ''Hierarchy'' factors are available, the Proposed Interpretation provides that the dealer may then consider a non-exclusive list of four factors in trying to establish the prevailing market price.[26] In contrast to the three ''Hierarchy'' factors, a dealer may consider these factors in any order.

- Prices of contemporaneous inter-dealer transactions in a ''similar'' security or prices of contemporaneous dealer transactions in a ''similar'' security with institutional accounts with which any dealer regularly effects transactions in the ''similar'' security; [27]
- Yields calculated from prices of contemporaneous inter-dealer transactions in ''similar'' securities;
- Yields calculated from prices of contemporaneous transactions with institutional accounts with which any dealer regularly effects transactions in ''similar'' securities; and
- Yields calculated from validated contemporaneous inter-dealer bid quotations in ''similar'' securities.[28]

The Proposed Interpretation provides that the relative weight of the pricing information obtained from these factors depends on the facts and circumstances surrounding the comparison transaction. These include whether the dealer in the comparison transaction was on the same side of the market as the dealer is in the subject transaction, the timeliness of the information, and, with respect to the fourth factor listed above, the relative spread of the quotations in the ''similar'' security to the quotations in the subject security.[29] NASD explains that when applying one or more of the four factors, a dealer must consider that the ultimate evidentiary issue is whether use of the factor will correctly identify the prevailing market price of the security.[30]

For purposes of these four factors, the Proposed Interpretation provides that a ''similar'' security should be sufficiently similar to the subject security that it would serve as a reasonable alternative investment. At a minimum, a dealer must be able to fairly estimate the market yield for the subject security from the yields of similar securities.[31] The Proposed Interpretation also sets forth a list of non-exclusive factors to use in identifying similar securities:

(a) Credit quality considerations, such as whether the security is issued by the same or a similar entity, bears the same or a similar credit rating, or is supported by a similarly strong guarantee or collateral as the subject security, including significant recent information of either issuer that is not yet incorporated in credit ratings, such as changes in ratings outlooks; [32]

(b) The extent to which the spread (*i.e.*, the spread over U.S. Treasury securities of a similar duration) at which the similar security trades is comparable to the spread at which the subject security trades; [33]

(c) General structural characteristics and provisions of the issue, such as coupon, maturity, duration, complexity or uniqueness of the structure, callability, the likelihood that the security will be called, tendered or exchanged, and other embedded options, as compared with the characteristics of the subject security; [34] and

(d) Technical factors, such as the size of the issue, the float and recent turnover of the issue, and legal restrictions on transferability as compared with the subject security.[35]

E. Use of Economic Models

If it is not possible to obtain information concerning the prevailing market price of the subject security by applying any of the factors discussed above, the Proposed Interpretation provides that the dealer or NASD may consider as a factor the prices or yields derived from economic models that take into account measures such as credit quality, interest rates, industry sector, time to maturity, call provisions and any other embedded options, coupon rate, and face value, and all applicable pricing terms and conventions (*e.g.*, coupon frequency and accrual methods).[36] NASD emphasizes that dealers may not use an economic model to establish the prevailing market price for mark-up purposes except in the limited instances when none of the factors discussed above apply.[37]

F. Isolated Transactions or Quotations

The Proposed Interpretation provides that ''isolated transactions or isolated quotations generally will have little or no weight or relevance in establishing prevailing market price.'' Thus, absent extraordinary circumstances, members considering the yields of similar securities may not rely exclusively on isolated transactions or a limited number of transactions that are not fairly representative of the yields of transactions in ''similar'' securities taken as a whole.[38]

G. QIB Exception

The Proposed Interpretation would except a qualified institutional buyer (''QIB'') [39] that is purchasing or selling a non-investment grade debt security from the definition of ''customer,'' when the dealer has determined that the QIB has the capacity to evaluate independently the investment risk and in fact is exercising independent judgment in deciding to enter into the transaction.[40] This exception from the ''customer'' definition also would apply to NASD Rule 2440 and IM–2440–1.[41]

[24] For a mark-down, a dealer must look to contemporaneous bid offers for the security. *See* Proposed IM–2440–2(b)(5)(C).

[25] *See* Proposed IM–2440–2(b)(5).

[26] *See* Proposed IM–2440–2(b)(6).

[27] For this factor and the third factor, the dealer should look to purchase transactions with institutional accounts when determining mark-ups, and to sale transactions with institutional accounts when determining mark-downs.

[28] For this factor, the dealer should look to inter-dealer bids when determining mark-ups, and to inter-dealer offers when determining mark-downs.

[29] *See* Proposed IM–2440–2(b)(6).

[30] *See* 2006 Notice.

[31] *See* Proposed IM–2440–2(c)(1). Where a security has several components, appropriate consideration may also be given to the prices or yields of the various components of the security. *See id.*

[32] *See* Proposed IM–2440–2(c)(2)(A).

[33] *See* Proposed IM–2440–2(c)(2)(B).

[34] *See* Proposed IM–2440–2(c)(2)(C).

[35] *See* Proposed IM–2440–2(c)(2)(D).

In some cases, there are no similar securities. When a debt security's value and pricing is based substantially on, and is highly dependent on, the particular circumstances of the issuer, including the issuer's creditworthiness and its ability and willingness to meet the specific obligations of the security, in most cases other securities will not be sufficiently similar and may not be used to establish prevailing market price of the subject security. *See* Proposed IM–2440–2(c)(3).

[36] *See* Proposed IM–2440–2(b)(7).

[37] *See* 2006 Notice.

[38] *See* Proposed IM–2440–2(b)(8).

[39] The Proposed Interpretation adopts the definition of QIB in Rule 144A of the Securities Act of 1933, 17 C.F.R. 230.144A. *See* Proposed IM–2440–2(b)(9).

[40] *See* Proposed IM–2440–2(b)(9).

[41] *See id.* For purposes of NASD Rule 2440, IM–2440–1 and the Proposed Interpretation, ''non-investment grade debt security'' shall mean a debt security that (i) if rated by only one NRSRO, is rated lower than one of the four highest generic rating categories; (ii) if rated by more than one NRSRO, is rated lower than one of the four highest generic rating categories by any of the NRSROs; or (iii) if unrated, either was analyzed as a non-investment grade debt security by the member and the member

NASD explained that there is less need to protect large institutional customers because they often have sufficient knowledge of the market.[42] NASD also stated that applying the Proposed Interpretation to generally illiquid market sectors often may yield little or no pricing information useful for calculating mark-ups.[43]

III. Summary of Comments on Amendment Nos. 3, 4, and 5

In soliciting comments on Amendment Nos. 3 through 5, the Commission stated that it would consider comments it previously received, and that commenters could reiterate or cross-reference these previous comments.[44] The Commission has considered all of the comments it received in response to both the original proposal, as amended by Amendment Nos. 1 and 2, and the proposed rule change, as amended by Amendment Nos. 3, 4, and 5, including commenters' reiteration of, and cross-references to, previously submitted comments. While the summary below refers to some comments previously submitted, it primarily discusses comments received on Amendment Nos. 3 through 5.

A. General Comments

All of the commenters commended NASD on changes made to the proposed rule in Amendment Nos. 3 through 5, and expressed particular support for the QIB exception.[45] One commenter noted the significance of the proposal and urged the Commission to adopt it as quickly as possible.[46]

B. Comments Related to the Proposed QIB Exception

While all of the commenters supported the QIB exception, they also urged NASD to extend it to transactions in other securities. Commenters suggested that the exception should apply to privately placed unregistered debt securities, stating that those securities have less pricing information and are less liquid that registered bonds, and emphasizing the sophistication of QIBs.[47] Commenters also suggested extending the exception to transactions in all securitized products, stating that applying the Proposed Interpretation to volatile markets could deter dealers from providing liquidity.[48]

In response to these comments, NASD stated that it would like to gain regulatory experience by monitoring how the market adjusts to the use of differentiated regulation for QIBs before it considers extending the exception to transactions in other securities. NASD noted in particular that the exception is a significant expansion of its approach of generally extending the requirements of all rules to all customers without differentiation.

C. Comments Related to the Former ''Size'' Proposal

An industry group asked NASD to reconsider its ''size'' proposal, which NASD eliminated when it proposed the QIB exception in Amendment No. 5.[49] The size proposal would have allowed a dealer to show that its contemporaneous cost was not indicative of prevailing market price when a large or small transaction was executed at a price away from the prevailing market price, as evidenced by certain contemporaneous transactions. The commenter stated that the use of discounted or premium price results from small or large trades to compute subsequent mark-ups would place dealers in a difficult position, requiring them to sell bonds at a price that is lower than the prevailing market price, or buy bonds at a price that is higher than the prevailing market price.

NASD responded that it had concluded that the size proposal would not be an appropriate basis to justify a shift from contemporaneous cost to determine the prevailing market price, in part due to customer protection concerns.[50]

D. Comments on ''News''

An industry group supported the provision in the Proposed Interpretation recognizing that news may affect the perceived value of a security subsequent to a trade, but believed that such news could be distributed through a variety of channels and may not be widely available to the marketplace.[51] The commenter also stated that news should include information that may impact the price of an issuer's debt securities, such as news about a different issuer.[52]

In response, NASD clarified that news that may affect the perceived value of a debt security may include information about other issuers. NASD further stated, however, that a dealer may not use news that is distributed through narrow channels and not broadly disseminated to the public because such narrowly disseminated information may not have a material impact upon market pricing.

E. Comments on Other Issues

Commenters also discussed a number of other issues related to the Proposed Interpretation. In particular, commenters criticized the ''Hierarchy'' of factors set forth in the Proposed Interpretation as inflexible and impractical,[53] requested additional guidance on the meaning of contemporaneous cost,[54] and requested that NASD clarify in the Proposed Interpretation that dealers may be market makers in debt markets.[55] NASD

---

retains credit evaluation documentation and demonstrates to NASD (using credit evaluation or other demonstrable criteria) that the credit quality of the security is, in fact, equivalent to a non-investment grade debt security, or was initially offered and sold and continues to be offered and sold pursuant to an exemption from registration under the Securities Act. *See id.*

[42] *See id.*

[43] *See id.*

[44] *See* 2006 Notice at n. 46.

[45] *See* SIFMA 1 Letter; SIFMA 2 Letter; CGMI Letter; Goldman Sachs Letter. The CGMI and Goldman Sachs Letters both expressed general support for the comments addressed in both of the SIFMA Letters.

[46] *See* Goldman Sachs Letter. While this commenter suggested a number of particular changes to the proposal, it emphasized the need for the Proposed Interpretation to be adopted quickly to give more clarity to market participants. The commenter also noted that while the Proposed Interpretation is an ''important first step'' in developing mark-up guidance, it should not be the final stage of the process. The commenter further asked the Commission and NASD to continue working with the industry to address additional issues as they become apparent with the application of the Proposed Interpretation. *See id.*

[47] *See* SIFMA 1 Letter; SIFMA 2 Letter; CGMI Letter; Goldman Sachs Letter.

[48] *See* SIFMA 2 Letter; Goldman Sachs Letter. In the alternative, SIFMA urged NASD to extend the exception to any private bond transactions in a securitized product. It also called for more flexibility with regard to the use of credit ratings and economic models. See SIFMA 2 Letter.

[49] *See* SIFMA 1 Letter. The ''size'' proposal was included in Amendment Nos. 3 and 4.

Goldman Sachs also commented on the withdrawal of the ''size'' proposal and asked NASD to confirm that the premium or discount that may occur with a large block trade can be considered when using the block trade price to determine prevailing for a subsequent trade, noting that it does not think the QIB exception adequately addresses this issue. *See* Goldman Sachs Letter.

[50] NASD stated that the size proposal raises significant investor protection concerns when large institutional sized positions are purchased and resold in small retail-sized transactions. NASD further noted that it had eliminated the size proposal in recognition that a dealer that is a market maker (as defined in Section 3(a)(38) of the Act) may avail itself of the spread before employing a mark-up. NASD also reiterated that if the dealer is not a market maker, it must use contemporaneous cost or other prices as provided in the Proposed Interpretation.

[51] *See* SIFMA 1 Letter. In response to initial comments on the proposal, NASD provided, through Amendment Nos. 3 through 5, that news that had an effect on the perceived value of a debt security after a dealer's contemporaneous transaction may justify shifting from contemporaneous cost to other cost values to determine the prevailing market price.

[52] *See id.*

[53] *See id.*

[54] *See* SIFMA 1 Letter; Goldman Sachs Letter.

[55] *See* SIFMA 1 Letter.

responded that it believes these issues were thoroughly vetted during the comment process related to this rule filing, noting that in addition to the comment periods under this rule filing, these issues had been addressed in a preceding rule filing that was superseded by this proposal.[56]

IV. Discussion and Commission Findings

The Commission has reviewed carefully the Proposed Interpretation, the comments on the proposed rule change, as amended, and NASD's response to the comments, and believes that NASD has responded appropriately to the concerns raised by the commenters. The Commission finds that the Proposed Interpretation, as amended, is consistent with the requirements of the Act and rules and regulations thereunder applicable to a national securities association, and, in particular, with Section 15A(b)(6) of the Act, which requires, among other things, that the rules of a national securities association be designed to prevent fraudulent and manipulative acts and practices, to promote just and equitable principles of trade, and, in general, to protect investors and the public interest.[57]

The Proposed Interpretation is designed to provide guidance to dealers for calculating fair prices and mark-ups in compliance with NASD Rule 2440 in a way that is consistent with long-standing Commission and judicial precedent regarding fair mark-ups.[58] The Proposed Interpretation provides a framework that specifically establishes contemporaneous cost as the presumptive prevailing market price, but also identifies certain dynamic factors that are relevant to whether contemporaneous cost or alternative values provide the most appropriate measure of prevailing market price. The Commission believes that the factors that govern when a dealer may depart from contemporaneous cost and that set forth alternative measures the dealer may use are reasonably designed to provide greater certainty to dealers and investors while providing an appropriate level of flexibility for dealers to consider alternative market factors when pricing debt securities.

While we are mindful of the important issues raised by commenters, we believe that NASD has reasonably addressed them. For example, the QIB exception should provide dealers with flexibility for transactions that present greater pricing challenges without undermining the investor protection benefits of the Proposed Interpretation. While it declined to expand this exception in response to comments at this time, NASD committed to monitor how the market adjusts to the use of differentiated regulation for QIBs in relation to mark-ups.[59]

The Commission also believes NASD has adequately addressed and responded to other issues raised by commenters throughout the comment process.[60] NASD's submission of two sets of responsive comments and five amendments to this rule filing reflects a deliberative and collaborative process ultimately focused on providing comprehensive and flexible mark-up guidance that contemplates dealers' practical experience in the debt markets. It is unavoidable that determining the baseline for a fair and reasonable mark-up will be inherently challenging. By recognizing the facts-and-circumstances nature of the analysis and by setting forth a logical series of factors to be used when a dealer departs from contemporaneous cost, however, NASD has proposed an approach for identifying the prevailing market price of a debt security that is reasonable and practical in addressing the interests of dealers and investors.

V. Conclusion

It is therefore ordered, pursuant to Section 19(b)(2) of the Act,[61] that the proposed rule change (SR–NASD–2003–141), as modified by Amendment Nos. 1 through 5, be, and it hereby is, approved.

For the Commission, by the Division of Market Regulation, pursuant to delegated authority.[62]

Nancy M. Morris,

Secretary.

[FR Doc. E7–7611 Filed 4–20–07; 8:45 am]

BILLING CODE 8010–01–P

[56] *See* NASD Notice to Members 94–62 (August 1994) and the comments submitted thereto; Securities Exchange Act Release No. 40511 (Sept. 30, 1998), 63 FR 54169 (Oct. 8, 1998) (soliciting comments on SR–NASD–97–61) and comments submitted thereto. NASD withdrew SR–NASD–97–61 when it filed SR–NASD–2003–141.

It should be noted that in its earlier response to comments, NASD provided additional guidance on some of these issues. NASD addressed comments on contemporaneous cost by amending the Proposed Interpretation to provide that the meaning of ''contemporaneous'' turns upon whether the transaction was close enough in time to be reasonably reflected in the security's market price. NASD also addressed comments on ''market maker'' status by stating that it adopted the term ''market maker'' as defined in Section 3(a)(38) of the Act for purposes of the proposal and that it will apply the statutory definition without broadening the limits imposed by current legal precedent.

[57] 15 U.S.C. 78o–3(b)(6). In approving this proposed rule change, the Commission has considered the proposed rule's impact on efficiency, competition, and capital formation. 15 U.S.C. 78c(f).

[58] *See e.g., F.B. Horner & Assocs.* v. *SEC*, 994 F.2d 61 (2d Cir. 1993) (citing *Barnett* v. *SEC*, 319 F.2d 340 (8th Cir. 1963) (absent evidence to the contrary, the Commission is entitled to consider a broker-dealer's contemporaneous cost as evidence of current market price)); *In the Matter of Alstead, Dempsey & Co.*, 47 S.E.C. 1034, 1984 SEC LEXIS 1847 (April 5, 1984); *In the Matter of DMR Securities, Inc.*, 47 S.E.C. 350, 1980 SEC LEXIS 1071 (July 21, 1980); *see also* Securities Exchange Act Release No. 24368 (April 21, 1987), 52 FR 15575 (April 29, 1987) (notice to broker-dealers concerning disclosure requirements for mark-ups on zero-coupon securities).

[59] NASD similarly provided a practical response to requests for clarification of news that may have an effect on the perceived value of a debt security. NASD clarified that such news may include information about other issuers, but drew an appropriate line by stating that dealers may not rely on news that is not broadly disseminated to the public because of the limited market impact of such information. NASD also responded reasonably to requests for the restoration of the ''size'' proposal, in light of the customer protection concerns it identified.

[60] For example, NASD took a reasonable position stating that is adopts the statutory definition of market maker in Section 3(a)(38) of the Act. Under current legal precedent, a dealer is not and should not be considered a market maker merely because the dealer takes risk positions or devotes substantial capital to provide liquidity. Rather, to be considered a market maker, a dealer must meet the legal requirements set forth in the Act, which provides, in relevant part, that a dealer must hold itself out as being willing to buy and sell a security for its own account on a regular or continuous basis. *See* Exchange Act Section 38(a)(38), 15 U.S.C. 78c(a)(38).

[61] 15 U.S.C. 78s(b)(2)

[62] 17 CFR 200.30–3(a)(12).

SOCIAL SECURITY ADMINISTRATION

Agency Information Collection Activities: Proposed Request and Comment Request

The Social Security Administration (SSA) publishes a list of information collection packages that will require clearance by the Office of Management and Budget (OMB) in compliance with P.L. 104–13, the Paperwork Reduction Act of 1995, effective October 1, 1995. The information collection packages that may be included in this notice are for new information collections, approval of existing information collections, revisions to OMB-approved information collections, and extensions (no change) of OMB-approved information collections.

SSA is soliciting comments on the accuracy of the agency's burden estimate; the need for the information; its practical utility; ways to enhance its quality, utility, and clarity; and on ways to minimize burden on respondents, including the use of automated collection techniques or other forms of information technology. Written comments and recommendations regarding the information collection(s)

should be submitted to the OMB Desk Officer and the SSA Reports Clearance Officer. The information can be mailed, faxed or e-mailed to the individuals at the addresses and fax numbers listed below:

(OMB), Office of Management and Budget, *Attn:* Desk Officer for SSA, Fax: 202–395–6974, *E-mail address: OIRA_Submission@omb.eop.gov.*

(SSA), Social Security Administration, DCBFM, *Attn:* Reports Clearance Officer, 1333 Annex Building, 6401 Security Blvd., Baltimore, MD 21235, *Fax:* 410–965–6400, *E-mail address: OPLM.RCO@ssa.gov.*

I. The information collections listed below are pending at SSA and will be submitted to OMB within 60 days from the date of this notice. Therefore, your comments should be submitted to SSA within 60 days from the date of this publication. You can obtain copies of the collection instruments by calling the SSA Reports Clearance Officer at 410–965–0454 or by writing to the address listed above.

1. Request for Program Consultation—20 CFR 404.1601—1661–0960–New. The Disability Determination Services (DDS) offices are staffed by State employees who perform disability determinations for applicants for Social Security disability benefits under Title II and Title XVI of the Social Security Act.

SSA's federal regional quality assurance office has the authority to review DDS determinations, to assess errors, and to return cases for corrective action by the DDS.

The information collected on the Request for Program Consultation (RPC) will be used by the DDS's that request a review of the regional quality assurance evaluations. The DDS's use the RPC to present their rationale that supports their determinations. The information collected includes a short rationale and policy citations supporting their rebuttal. The RPC team will use the information to reassess their initial determination.

The respondents are DDS's who request a review of the regional quality assurance determination.

Type of Request: Request for a new information collection.

Number of Respondents: 4500.

Frequency of Response: 1.

Average Burden Per Response: 50 minutes.

Estimated Annual Burden: 3750 hours.

2. Request to Decision Review Board To Vacate the Administrative Law Judge Dismissal of Hearing—20 CFR 405.427—0960–NEW. The information collected on Form SSA–525 will be used by Social Security Administration's Decision Review Board (Board) when a hearing on a claim for Title II or Title XVI disability payments is dismissed and the claimant requests that the dismissal be vacated. The Board will use this information to (1) establish the continued involvement of the requester in his or her claim;

(2) consider the requester's arguments for vacating the dismissal; and (3) vacate or decline to vacate the administrative law judge's dismissal order. The respondents are Social Security disability or Supplemental Security Income (SSI) claimants who are requesting that the dismissal be vacated.

Type of Request: Request for a new information collection.

Number of Respondents: 30,000.

Frequency of Response: 1.

Average Burden per Response: 10 minutes.

Estimated Annual Burden: 5,000 hours.

3. Medical History and Disability Report, Disabled Child—20 CFR 416.912—0960–0577. The Social Security Act requires claimants to furnish medical and other evidence to prove they are disabled. The form SSA–3820 is used to obtain various types of information about a child's condition, his/her treating sources and/or other medical sources of evidence. The information collected on the SSA–3820 is needed for the determination of disability by the State DDSs. The respondents are applicants for Title XVI (SSI) child disability benefits.

Type of Request: Revision to an OMB-approved information collection.

Collection format	Number of respondents	Frequency of responses	Average burden per responses (hours)	Estimated annual burden (hours)
SSA–3820 (Paper Form)	500	1	1	500
Electronic Disability Collection System (EDCS)	422,000	1	[1] 34	239,133
i3820 (Internet)	39,500	1	2	79,000
Totals	462,000			318,633

1 Minutes.

4. Social Security Disability Report—20 CFR 404.1512 & 416.912—0960–0579. The Social Security Administration requires applicants for disability payments to furnish medical, work history, and other evidence or information indicating they have an impairment which is disabling. This information is collected by form SSA–3368, the Adult Disability Report, and is used by State DDS's to make disability determinations for SSA.

The respondents are applicants for Title II and Title XVI disability benefits. These applicants may complete the form using any of the following modalities: (1) The traditional paper form; (2) an interview with an SSA field office representative, using the Electronic Disability Collection System (EDCS); (3) the Internet (i3368); and (4) a modality, the i3368–PRO, an Internet form designed to be completed by representatives of applicants for disability payments. The latter three versions of the form collect the same information as the paper form, but may be formatted differently and include certain enhancements (ex: self-help screens) to guide the claimant or interviewer through the application process.

Type of Request: Revision to an OMB-approved information collection.

Collection format	Number of respondents	Frequency of response	Average burden per response (hours)	Estimated annual burden (hours)
SSA–3368 (Paper version)	9,364	1	1	9,364

Collection format	Number of respondents	Frequency of response	Average burden per response (hours)	Estimated annual burden (hours)
Field office/Electronic Disability Collection System (EDCS)	3,138,920	1	1	3,138,920
i3368 (Internet version; Hour burden varies from 1½–3 hours, depending on information required)	101,135	1	2½	252,837
i3368–PRO	101,135	1	1½	151,702
Totals	3,350,554			3,552,823

5. Certification of Contents of Document(s) or Record(s)—20 CFR 404.715 ff–0960–689. SSA must secure evidence necessary for individuals to establish rights to benefits. Some of the types of evidence needed are evidence of age relationship, citizenship, marriage, death, and military service. Form SSA–704 allows SSA employees, state record custodians, and other custodians of evidentiary documents to record information from documents and records to establish these types of evidence. SSA employees use this form but it is also used by state record custodians and other custodians of evidentiary documents.

Type of Request: Extension of an OMB-approved information collection.

Number of Respondents: 4,800.

Average Burden Per Response: 10 minutes.

Estimated Annual Burden: 800.

6. Waiver of Your Right to Personal Appearance before an Administrative Law Judge—20 CFR 404.948(b)(l)(i) and 416.1448(b)(l)(i) –0960–0284. Each claimant has a statutory right to appear in person (or through a representative) and present evidence about his/her claim at a hearing before an Administrative Law Judge (ALJ). If a claimant wishes to waive his/her statutory right to appear before an ALJ, he/she must complete a written request. The claimant may use Form HA–4608 for this request. The information collected is used to document an individual's claim to show that an oral hearing is not preferred in the appellate process. The respondents are applicants for Title II benefits and Title XVI payments who request a hearing.

Number of Respondents: 12,000.

Frequency of Response: 1.

Average Burden per Response: 2 minutes.

Estimated Annual Burden: 400 hours.

7. Youth Transition Process Demonstration Evaluation Data Collection–0960–0687.

Background

The Youth Transition Demonstration (YTD) projects are intended to help young people with disabilities make the transition from school to work. By waiving certain disability program rules and offering services to youth who are either receiving disability benefits or at risk of receiving them, these projects are expected to encourage youth to work and/or continue their education. YTD projects will be fully implemented in 10 sites across the country. The evaluation will produce empirical evidence on the impacts of the waivers and project services not only on educational attainment, employment, earnings, and receipt of benefits by youth with disabilities but also on the Social Security Trust Fund and federal income tax revenues. This type of project is authorized by sections 1110 and 234 of the Social Security Act.

Project Description

Given the importance of estimating YTD impacts as accurately as possible, the evaluation will be conducted using rigorous analytic methods based on the random assignment of youth to a treatment or control group. Several data collection efforts are planned. These include (1) baseline interviews with youth and their parents or guardians prior to random assignment; (2) follow-up interviews at 12 and 36 months after random assignment; (3) interviews and/or roundtable discussions with local program administrators, program supervisors, and service delivery staff; and (4) focus groups of youth, their parents, and service providers. The respondents will be youths with disabilities who have enrolled in the project, their parents or guardians, program staff, and service providers.

Type of Request: Revision of an existing OMB Clearance.

Data collection year	Collection	Number of respondents	Responses per respondent	Average burden per response (minutes)	Total response burden (hours)
2007	Baseline	962	1	33	529
	12 month follow-up	437	1	50	364
	Focus group	140	1	90	210
	Program staff/service provider	32	1	60	32
Total 2007					1,135

8. Annual Registration Statement Identifying Separated Participants With Deferred Benefits, Schedule SSA—0960–0606. Schedule SSA is a form filed annually as part of a series of pension plan documents required by section 6057 of the IRS Code. Administrators of pension benefit plans are required to report specific information on future plan benefits for those participants who left plan coverage during the year. SSA maintains the information until a claim for Social Security benefits has been approved. At that time, SSA notifies the beneficiary of his/her potential eligibility for payments from the private pension plan. The respondents are administrators of pension benefit plans or their service providers employed to prepare the Schedule SSA on behalf of the pension benefit plan. Below are the estimates of the cost and hour burdens for completing and filing Schedule SSA(s). We have used an average to estimate the hour burden. However, the burden may be greater or smaller depending on whether the respondent is a large or small pension benefit plan and how

many Schedule SSA's are filed in a given year.

Type of Request: Extension of an OMB-approved information collection.

Number of Respondents: 88,000.

Frequency of Response: 1.

Average Burden per Response: 2.5 hours.

Estimated Annual Burden: 220,000 hours.

Estimated Annual Cost Burden for All Respondents: $12,194,400.

II. The information collections listed below have been submitted to OMB for clearance. Your comments on the information collections would be most useful if received by OMB and SSA within 30 days from the date of this publication. You can obtain a copy of the OMB clearance packages by calling the SSA Reports Clearance Officer at 410–965–0454, or by writing to the address listed above.

1. Application for Benefits under the Italy-U.S. International Social Security Agreement—20 CFR 404.19250—960–0445. The United States and Italy entered into an agreement on November 1, 1978. Article 19.2 of that agreement provides that an applicant for benefits can file his application with either country. Article 4.3 of the Protocol to the Agreement provides that the country that receives the application will forward agreed upon forms and applications to the other country. Form SSA–2528 is the form agreed upon that is completed by individuals who file an application for U.S. benefits directly with one of the Italian Social Security Agencies. The information collected on Form SSA–2528 is required by SSA in order to determine entitlement to benefits. The respondents are applicants for old-age, survivors or disability benefits, who reside in Italy.

Type of Request: Extension of an OMB-approved information collection

Number of Respondents: 200.

Frequency of Response: 1.

Average Burden per Response: 20 minutes.

Estimated Annual Burden: 67 hours.

2. Physician's/Medical Officer's Statement of Patient's Capability to Manage Benefits—20 CFR 404.2015 & 416.615—0960–0024. The information collected on the SSA–787 is used to determine whether an individual is capable of handling his or her own benefits. This information is also used for leads in selecting a representative payee, if needed. The respondents are physicians of the beneficiaries or medical officers of the institution in which the beneficiaries reside.

Type of Request: Revision of an OMB-approved information collection.

Number of Respondents: 120,000.

Frequency of Response: 1.

Average Burden per Response: 10 minutes.

Estimated Annual Burden: 20,000 hours.

3. Modified Benefit Formula Questionnaire—Foreign Pension—0960–0561. The information collected on the SSA–308 is used to determine exactly how much (if any) of a foreign pension may be used to reduce the amount of Social Security retirement or disability benefits under the modified benefit formula. The respondents are applicants for Social Security retirement or disability benefits.

Type of Request: Extension of an OMB-approved information collection.

Number of Respondents: 50,000.

Frequency of Response: 1.

Average Burden per Response: 10 minutes.

Estimated Annual Burden: 8,333 hours.

4. Social Security Benefits Applications—20 CFR Subpart D, 404.310–404.311 and 20 CFR Subpart F, 404.601–401.603—0960–0618. One of the requirements for obtaining Social Security benefits is the filing of an application so that a determination may be made on the applicant's eligibility for monthly benefits. In addition to the traditional paper application, SSA has developed various options, listed below, for the public to add convenience and operational efficiency to the application process. The total estimated number of respondents to all application collections formats is 3,843,369 with a cumulative total of 963,056 burden hours. The respondents are applicants for retirement insurance benefits (RIB), disability insurance benefits (DIB), and/or spouses' benefits.

Type of Request: Extension of an OMB-approved information collection.

Internet Social Security Benefits Application (ISBA)

ISBA, which is available through SSA's Internet site, is one method that an individual can choose to file an application for benefits. Individuals can use ISBA to apply for retirement insurance benefits (RIB), disability insurance benefits (DIB) and spouse's insurance benefits based on age. SSA gathers only information relevant to the individual applicant's circumstances and will use the information collected by ISBA to entitle individuals to RIB, DIB, and/or spouses' benefits. The respondents are applicants for RIB, DIB, and/or spouses benefits.

Number of Respondents: 169,000.

Frequency of Response: 1.

Average Burden per Response: 20.4 minutes.

Estimated Annual Burden: 57,460 hours.

Paper Application Forms

Application for Retirement Insurance Benefits (SSA–1)

The SSA–1 is used by SSA to determine an individual's entitlement to RIB. In order to receive Social Security RIB, an individual must file an application with SSA. The SSA–1 is one application that the Commissioner of Social Security prescribes to meet this requirement. The information that SSA collects will be used to determine entitlement to benefits. The respondents are individuals who choose to apply for Social Security RIB using the paper application.

Approximately 1,460,692 respondents complete the SSA–1 annually. Of this total 97% (1,416,871) are completed through SSA's Modernized Claims System (MCS) and 50% of the MCS respondents will use Signature Proxy (708,435.5). The breakdown is displayed on the following chart.

Collection method	Number of respondents	Estimated completion time (minutes)	Burden hours
MCS	708,436	10.5	123,976
MCS/Signature Proxy	708,435	9.5	112,169
Paper	43,821	10.5	7,669
Totals	1,460,692	.....	243,814

Application for Wife's or Husband's Insurance Benefits (SSA–2)

SSA uses the information collected on Form SSA–2 to determine if an applicant (including a divorced applicant) can be entitled to benefits as the spouse of the worker and the amount of the spouse's benefits. The respondents are applicants for wife's or husband's benefits, including those who are divorced.

Approximately 700,000 respondents complete the SSA–2 annually. Of this total 95% (665,000) are completed through MCS and 50% of the MCS respondents will use Signature Proxy (332,500). The breakdown is displayed on the following chart:

Collection method	Number of respondents	Estimated completion time (minutes)	Burden hours
MCS	332,500	15	83,125
MCS/Signature Proxy	332,500	14	77,583
Paper	35,000	15	8,750
Totals	700,000		169,458

Application for Disability Insurance Benefits (SSA–16)

Form SSA–16–F6 obtains the information necessary to determine whether the provisions of the Act have been satisfied with respect to an applicant for disability benefits, and detects whether the applicant has dependents who would qualify for benefits on his or her earnings record. The information collected on form SSA–16 helps to determine eligibility for Social Security disability benefits. The respondents are applicants for Social Security disability benefits.

Approximately 1,513,677 respondents complete the SSA–16 annually. Of this total 97% (1,468,267) are completed through SSA's Modernized Claims System (MCS) and 50% of the MCS respondents will use Signature Proxy (734,133.5). The breakdown is displayed on the following chart:

Collection method	Number of respondents	Estimated completion time (minutes)	Burden hours
MCS	734,134	20	244,711
MCS/Signature Proxy	734,133	19	232,476
Paper	45,410	20	15,137
Totals	1,513,677		492,324

Dated: April 17, 2007.

Elizabeth A. Davidson,

Reports Clearance Officer, Social Security Administration.

[FR Doc. E7–7649 Filed 4–20–07; 8:45 am]

BILLING CODE 4191–02–P

DEPARTMENT OF STATE

[Public Notice 5781]

Bureau of International Security and Nonproliferation; Imposition of Nonproliferation Measures Against Foreign Persons, Including a Ban on U.S. Government Procurement.

AGENCY: Department of State.

ACTION: Notice.

SUMMARY: A determination has been made that fourteen foreign persons have engaged in activities that warrant the imposition of measures pursuant to Section 3 of the Iran and Syria Nonproliferation Act, which provides for penalties on foreign persons (including individuals, nongovernmental entities and organizations, governments and government entities) for the transfer to or acquisition from Iran since January 1, 1999 or the transfer to or acquisition from Syria since January 1, 2005, of equipment and technology controlled under multilateral export control lists (Missile Technology Control Regime, Australia Group, Chemical Weapons Convention, Nuclear Suppliers Group, Wassenaar Arrangement) or otherwise having the potential to make a material contribution to the development of weapons of mass destruction (WMD) or cruise or ballistic missile systems. The latter category includes (a) items of the same kind as those on multilateral lists, but falling below the control list parameters, when it is determined that such items have the potential of making a material contribution to WMD or cruise or ballistic missile systems, (b) other items with the potential of making such a material contribution, when added through case-by-case decisions, and (c) items on U.S. national control lists for WMD/missile reasons that are not on multilateral lists.

EFFECTIVE DATE: April 17, 2007.

FOR FURTHER INFORMATION CONTACT: On general issues: Pamela K. Durham, Office of Missile Threat Reduction, Bureau of International Security and Nonproliferation, Department of State (202–647–4931). On U.S. Government procurement ban issues: Gladys Gines, Office of the Procurement Executive, Department of State (703–516–1691).

SUPPLEMENTARY INFORMATION: Pursuant to Sections 2 and 3 of the Iran and Syria Nonproliferation Act (Pub. L. 109–112), the U.S. Government determined on April 10, 2007 that the measures authorized in Section 3 of the Act shall apply to the following foreign persons identified in the report submitted pursuant to Section 2(a) of the Act:

China National Precision Machinery Import/Export Corporation (CPMIEC) (China) and any successor, sub-unit, or subsidiary thereof;

Shanghai Non-Ferrous Metals Pudong Development Trade Co. Ltd. (China) and any successor, sub-unit, or subsidiary thereof;

Zibo Chemet Equipment Company (China) and any successor, sub-unit, or subsidiary thereof;

Defense Industries Organization (DIO) (Iran) and any successor, sub-unit, or subsidiary thereof;

Hizballah and any successor, sub-unit, or subsidiary thereof;

Sokkia Singapore PTE Ltd. (Singapore) and any successor, sub-unit, or subsidiary thereof;

Army Supply Bureau (Syria) and any successor, sub-unit, or subsidiary thereof;

Syrian Air Force (Syria) and any successor, sub-unit, or subsidiary thereof;

Syrian Navy (Syria) and any successor, sub-unit, or subsidiary thereof;

Industrial Establishment of Defense (Syria) and any successor, sub-unit, or subsidiary thereof;

Challenger Corporation (Malaysia) and any successor, sub-unit, or subsidiary thereof;

Target Airfreight (Malaysia) and any successor, sub-unit, or subsidiary thereof;

Aerospace Logistics Services (Mexico) and any successor, sub-unit, or subsidiary thereof; and

Arif Durrani (Pakistan);

Accordingly, pursuant to the provisions of the Act, the following measures are imposed on these persons:

1. No department or agency of the United States Government may procure, or enter into any contract for the procurement of, any goods, technology, or services from these foreign persons;

2. No department or agency of the United States Government may provide any assistance to the foreign persons, and these persons shall not be eligible to participate in any assistance program of the United States Government;

3. No United States Government sales to the foreign persons of any item on the United States Munitions List (as in effect on August 8, 1995) are permitted, and all sales to these persons of any defense articles, defense services, or design and construction services under the Arms Export Control Act are terminated; and,

4. No new individual licenses shall be granted for the transfer to these foreign persons of items the export of which is controlled under the Export Administration Act of 1979 or the Export Administration Regulations, and any existing such licenses are suspended.

These measures shall be implemented by the responsible departments and agencies of the United States Government and will remain in place for two years from the effective date, except to the extent that the Secretary of State may subsequently determine otherwise. A new determination will be made in the event that circumstances change in such a manner as to warrant a change in the duration of sanctions.

Dated: April 17, 2007.

Patricia A. McNerney,

Acting Assistant Secretary of State for International Security and Nonproliferation, Department of State.

[FR Doc. E7–7660 Filed 4–20–07; 8:45 am]

BILLING CODE 4710–25–P

DEPARTMENT OF TRANSPORTATION

Federal Aviation Administration

Noise Exposure Map Notice; Receipt of Noise Compatibility Program and Request for Review; Hartsfield-Jackson Atlanta International Airport, Atlanta, GA

AGENCY: Federal Aviation Administration, DOT.

SUMMARY: The Federal Aviation Administration (FAA) announces its determination that the Noise Exposure Maps submitted by the City of Atlanta for Hartsfield-Jackson Atlanta International Airport under the provisions of 49 U.S.C. 47501 *et. seq.* (Aviation Safety and Noise Abatement Act) and 14 CFR part 150 are in compliance with applicable requirements. The FAA also announces that it is reviewing a proposed Noise Compatibility Program that was submitted for Hartsfield-Jackson Atlanta International Airport under Part 150 in conjunction with the Noise Exposure Map, and that this program will be approved or disapproved on or before October 7, 2007.

DATES: *Effective Date:* The effective date of the FAA's determination on the Noise Exposure Maps and of the start of its review of the associated Noise Compatibility program is April 10, 2007. The public comment period ends June 11, 2007.

FOR FURTHER INFORMATION CONTACT: Bonnie Baskin, Federal Aviation Administration, Atlanta Airports District Office, 1701 Columbia Avenue, Campus Building, Suite 2–260, College Park, Georgia 30337, 404–305–7152. Comments on the proposed Noise Compatibility Program should also be submitted to the above office.

SUPPLEMENTARY INFORMATION: This Notice announces that the FAA finds that the Noise Exposure Maps submitted for Hartsfield-Jackson Atlanta International Airport are in compliance with applicable requirements of Part 150, effective April 10, 2007. Further, FAA is reviewing a proposed Noise Compatibility Program for that Airport which will be approved or disapproved on or before October 7, 2007. This notice also announces the availability of this Program for public review and comment.

Under 49 U.S.C., Section 47503 of the Aviation Safety and Noise Abatement Act, (the Act), and airport operator may submit to the FAA Noise Exposure Maps which meet applicable regulations and which depict non-compatible land uses as of the date of submission of such maps, a description of projected aircraft operations, and the ways in which such operations will affect such maps. The Act requires such maps to be developed in consultation with interested and affected parties in the local community, government agencies, and persons using the airport.

An airport operator who has submitted Noise Exposure Maps that are found by FAA to be in compliance with the requirements of Part 150, promulgated pursuant to the Act, may submit a Noise Compatibility Program for FAA approval which sets forth the measures the operator has taken or proposes to take to reduce existing non-compatible uses and prevent the introduction of additional non-compatible uses.

The City of Atlanta submitted to the FAA on March 29, 2007 Noise Exposure Maps, descriptions and other documentation that were produced during the Hartsfield-Jackson Atlanta International Airport FAR Part 150 Study Noise Exposure Maps Report conducted between October 9, 2006 and April 6, 2007. It was requested that the FAA review this material as the Noise Exposure Maps, as described in Section 47503 of the Act, and that the noise mitigation measures, to be implemented jointly by the airport and surrounding communities, be approved as a Noise Compatibility Program under Section 47504 of the Act.

The FAA has completed its review of the Noise Exposure Maps and related descriptions submitted by the City of Atlanta. The specific documentation determined to constitute the Noise Exposure Maps includes: Map A—Noise Exposure Map: 2007; Map B—Noise Exposure Map: 2012; Table 3.1, Average Daily Operations—2007; Table 3.2, Aircraft Fleet Mix—2007; Table 3.3, Percent Runway Utilization by Time of Day7—2007; Table 3.4, Departure Headings—2007; Figure 3–2, NOMS Data—East Flow Tracks; Figure 3–3, NOMS Data—West Flow Tracks; Figure 3–4, 2007 East Flow Corridors; Figure 3–5, 2007 West Flow Corridors; Table 3.5, Departure Stage Length: Air Carrier Aircraft—2007; Table 3.6, Nighttime Operations—2007; Table 3.8, Noise

Contours: Estimated Population—2007; Table 3.10, Noise Levels at Noise Sensitive Sites (other than residential)—2007; Table 4.1, Average Daily Operations—Future 2012; Table 4.2, Aircraft Fleet Mix—2012; Table 4.3, Percent Runway Utilization by Time of Day—2012; Table 4.5, Noise Exposure Contours: Population—2012; and Appendix D, Runway Utilizations. The FAA has determined that these maps for Hartsfield-Jackson Atlanta International Airport are in compliance with applicable requirements. This determination is effective on April 10, 2007. FAA's determination on the airport operator's Noise Exposure Maps is limited to a finding that the maps were developed in accordance with the procedures contained in Appendix A of FAR Part 150. Such determination does not constitute approval of the airport operator's data, information or plans, or a commitment to approve a Noise Compatibility Program or to fund the implementation of that Program.

If questions arise concerning the precise relationship of specific properties to noise exposure contours depicted on a Noise Exposure Map submitted under Section 47503 of the Act, it should be noted that the FAA is not involved in any way in determining the relative locations of specific properties with regard to the depicted noise exposure contours, or in interpreting the Noise Exposure Maps to resolve questions concerning, for example, which properties should be covered by the provisions of Section 47506 of the Act. These functions are inseparable from the ultimate land use control and planning responsibilities of local government. These local responsibilities are not changed in any way under part 150 or through FAA's review of Noise Exposure Maps. Therefore, the responsibility for the detailed overlaying of noise exposure contours onto the map depicting properties on the surface rests exclusively with the airport operator that submitted those maps, or with those public agencies and planning agencies with which consultation is required under Section 47503 of the Act. The FAA has relied on the certification by the airport operator, under Section 150.21 of part 150, that the statutorily required consultation has been accomplished.

The FAA has formally received the Noise Compatibility Program for Hartsfield-Jackson Atlanta International Airport, also effective on April 10, 2007. Preliminary review of the submitted material indicates that it conforms to the requirements for the submittal of Noise Compatibility Programs, but that further review will be necessary prior to approval or disapproval of the program. The formal review period, limited by law to a maximum of 180 days, will be completed on or before October 7, 2007.

The FAA's detailed evaluation will be conducted under the provisions of Part 150, Section 150.33. The primary considerations in the valuation process are whether the proposed measures may reduce the level of aviation safety, create an undue burden on interstate or foreign commerce, or be reasonably consistent with obtaining the goal of reducing existing non-compatible land uses and preventing the introduction of additional non-compatible land uses.

Interested persons are invited to comment on the proposed program with specific reference to these factors. All comments, other than those properly addressed to local land use authorities, will be considered by the FAA to the extent practicable. Copies of the Noise Exposure Maps, the FAA's evaluation of the maps, and the proposed Noise Compatibility Program are available for examination at the following location: Federal Aviation Administration, Atlanta Airports District Office, 1701 Columbia Avenue, Campus Building, Suite 2–260, College Park, Georgia 30337.

Questions may be directed to the individual named above under the heading, **FOR FURTHER INFORMATION CONTACT**.

Issued in Atlanta, Georgia April 10, 2007.

Scott L. Seritt,

Manager, Atlanta Airports District Office.

[FR Doc. 07–1992 Filed 4–20–07; 8:45 am]

BILLING CODE 4910–13–M

DEPARTMENT OF TRANSPORTATION

Federal Aviation Administration

Notice of Availability of the Final Environmental Impact Statement (FEIS) and Section 4(f) Evaluation for Proposed Development Activities at the Juneau International Airport, Juneau, AK; Notice of Public Comment Period for the FEIS and Schedule of Public Information Meeting; Notice of New Construction Significantly Affecting Wetlands and Finding of No Practicable Alternative

AGENCY: Federal Aviation Administration (FAA), Department of Transportation (DOT). The U.S. Army Corps of Engineers (USACE), U.S. Fish and Wildlife Service (USFWS), National Marine Fisheries Services (NMFS) and Alaska Department of Fish and Game (ADF&G) are cooperating agencies, by virtue of their jurisdictional authority, expertise, and/or resources management responsibilities.

ACTION: Notice of availability of Final Environmental Impact Statement, notice of public information meeting, and notice of public comment period.

LOCATION OF THE PROPOSED ACTION: The Juneau International Airport is located within the City and Borough of Juneau (CBJ), approximately 9 miles northwest of downtown Juneau. Airport property encompasses approximately 662 acres of land. Approximately 21.3 acres of land located immediately east and west of the Airport on Mendenhall Wetlands State Game Refuge would need to be acquired for implementation of the preferred alternatives.

SUMMARY: The Federal Aviation Administration announces that a Final Environmental Impact Statement (FEIS) for Proposed Development Activities at the Juneau International Airport (JNU) has been prepared and is available for public review and comment. The FEIS includes the results of consultation with state and federal agencies regarding applicable statutes. The FEIS also discusses impacts to the base floodplain, wetlands and waters of the U.S. historic properties, essential fish habitat, wildlife, and DOT Section 4(f) resources and measures to mitigate those impacts.

The FAA is seeking comments on the FEIS, with specific attention to those sections that have been substantively updated since publication of the Draft EIS (DEIS). See **SUPPLEMENTARY INFORMATION** for a summary of the substantive changes contained in the FEIS. All comments on the FEIS are to be submitted either at the public meeting, or to SWCA Environmental Consultants, at the address shown in the section below entitled ''Written Comments Should Be Sent To'' or via the project Web site at *http://www.jnu-eis.org.*

SUPPLEMENTARY INFORMATION: The FAA as lead agency has prepared the FEIS for proposed development activities at the Juneau International Airport (JNU), Juneau, Alaska. These development activities include actions to:

- Bring the Airport into compliance with FAA standards for runway safety area,
- Improve navigational alignment with Runway 26 at night and during poor weather,
- Construct and use a new, larger snow removal equipment and maintenance facility,
- Develop an improved, safer, and more secure access route to the fuel farm,

• Construct new aircraft parking and storage facilities to meet existing and future demands, and

• Implement an improved wildlife hazard management program that will reduce potential for aircraft collisions with wildlife.

FAA published the Draft EIS (DEIS) in April 2005. The DEIS was prepared in accordance with the National Environmental Policy Act of 1969 (NEPA). The DEIS disclosed the environmental consequences associated with the proposed development activities at JNU and analyzed multiple alternatives associated with six Proposed Actions, including No Action Alternatives.

After publication of the FEIS, FAA issued new guidance (a change to Advisory Circular 150/5300–13) regarding undershoot protection requirements for runway safety areas (RSA). This new guidance provided FAA an opportunity to change some of the RSA configurations analyzed in the DEIS. As a result, the FEIS includes three additional RSA alternatives representing modifications of alternatives evaluated in the DEIS. These alternatives are identified as RSA–5D—Relocate Runway 26 Threshold and Construct Additional Runway and Safety Areas; RSA–5E—Displace Runway 08 Threshold 120 Feet and Construct Additional 26 Runway and Safety Area (Sponsor's Proposed Project); and RSA–6D—Threshold Displacement using Declared Distance Criteria with Option for EMAS. One of these modified alternatives, RSA–5E, was adopted by the Airport Sponsor as the Proposed Action and is the FAA's preferred alternative.

Other substantive FEIS changes were made in response to public comment on the DEIS, with particular efforts to reduce environmental impacts to the Refuge and important habitat. Among the changes included are an alternative location for placement of the Automated Surface Observation System, a modified channel configuration for the relocation of lower Duck Creek, additional hydraulic modeling for the tidal sloughs east of the existing runway, analysis of potential affects on Mendenhall River hydraulics and geomorphology, a conceptual compensatory mitigation plan, updated cost estimates, and detailed analysis of potential impacts to Alaska Airlines special navigation procedures employed at JNU.

Those portions of the FEIS containing the substantively updated information include but are not limited to the following sections and their subsections and their subsections: 2.2.2, 2.6, 2.11, 2.12, 2.13, 4.2, 4.3, and Appendices A, C, I, J, K, L, and M.

The proposed Airport improvements would be completed during the 2007–2015 time period and would result in impacts to wetlands, water quality, wildlife habitat, vegetation, essential fish habitat, visual quality, socioeconomics, air, noise and two DOT Section 4(f) properties, the Dike Trail and the Mendenhall Wetlands State Game Refuge.

FAA will not make decisions on the Proposed Actions for a minimum of 30 days following publication of this Notice of Availability of the FEIS in the **Federal Register**. FAA will record the appropriate decisions in a Record of Decision.

FEIS Availability and Review

Copies of the FEIS may be viewed during regular business hours at the following locations:

1. Federal Aviation Administration, Airports Division, 222 W. 7th Avenue #14, Anchorage, AK 99513–7504. (907) 271–5454 or (907) 271–5438.

2. Juneau International Airport, Airport Managers Office, 1873 Shell Simmons Drive, Juneau, AK (907) 789–7821.

3. Valley Branch Public Library, Mendenhall Mall, Juneau, AK 99801. (907) 789–0125.

4. Downtown Juneau Public Library, 292 Marine Way, Juneau, AK 99801. (907) 586–5249. The Juneau International Airport, Airport Manager's office has a limited number of CDs of the entire FEIS and Executive Summaries available for public distribution. These may be obtained by contacting the Airport Manager's Office at (907) 789–7821. The FEIS may also be viewed at the following Web site: *http://www.jnu-eis.org*.

Public Comment and Information Meeting: A public information meeting will be held on May 14, 2007, between 5 p.m. and 8 p.m. (ADT) at Centennial Hall, 101 Egan Drive, Juneau, AK 99801. A presentation regarding the FAA's preferred alternatives will be provided at 6:30 p.m. (ADT). Written comments on the sections of the document identified above may be submitted during the public information meeting or to the address listed in the section entitled ''Written Comments Should Be Sent to''.

On-line comments may be submitted using the form provided at the project Web site *http://www.jnu-eis.org* by following the links to Public Comment Form. Comments should be as specific as possible and address the analysis of potential environmental impacts and the adequacy of the proposed action or merits of alternatives and the mitigation being considered. Reviewers should organize their participation so that it is meaningful and makes the agency aware of the reviewer's interests and concerns using quotations and other specific references to the text of the Final EIS and related documents. Matters that could have been raised with specificity during the comment period on the Draft EIS or Final EIS may not be considered if they are raised later in the decision process. This commenting procedure is intended to ensure that substantive comments and concerns are made available to the FAA in a timely manner so that the FAA has an opportunity to address them.

FOR FURTHER INFORMATION CONTACT: Patti Sullivan, Environmental Specialist, Federal Aviation Administration, Alaskan Region, Airports Division, 222 W. 7th Avenue #14, Anchorage, AK 99513–7504. Ms. Sullivan may be contacted during business hours at (907) 271–5454 (phone) and (907) 271–2851 (facsimile).

Written Comments Should Be Sent to: SWCA Environmental Consultants, ATTN: Juneau Airport EIS, 257 East 200 South, Ste. 200, Salt Lake City, Utah 84111.

Electronic comments may be submitted via the EIS Web site at *http://www.jnu-eis.org*.

All comments must be received no later than 5 p.m. (ADT) on June 11, 2007.

Issued in Anchorage, Alaska on April 17, 2007.

Byron K. Huffman,

Manager, Airports Division, Alaskan Region.

[FR Doc. 07–2000 Filed 4–20–07; 8:45 am]

BILLING CODE 4910–13–M

DEPARTMENT OF TRANSPORTATION

Federal Aviation Administration

Notice of Intent To Execute an Agreement Effective October 1, 2007, to (1) Release Certain Properties From All Terms, Conditions, Reservations and Restrictions of the Quitclaim Deed Agreement Between the City of Pompano Beach and the Federal Aviation Administration for the Pompano Beach Airpark, Pompano Beach, FL; and (2) Approve Interim Non-Aeronautical Uses for Certain Properties Subject to the Same Provisions

AGENCY: Federal Aviation Administration (FAA), DOT.

ACTION: Request for public comment.

SUMMARY: The FAA hereby provides notice of intent to execute an agreement with the City of Pompano Beach, Florida, to formally release certain airport properties, 295.7 acres, at the Pompano Beach Airpark, Pompano Beach, FL from the conditions, reservations, and restrictions as contained in a Quitclaim Deed agreement between the FAA and the City of Pompano Beach, dated August 29, 1947, and correctional Quitclaim Deed dated December 18, 1947, and supplemental Quitclaim Deed dated June 24, 1948; and approve interim non-aeronautical uses for certain other airport properties, 250 acres, at the Pompano Beach Airpark, Pompano Beach, FL. The release of property from the conditions, reservations, and restrictions as contained in the Quitclaim Deed agreements will allow the City of Pompano Beach to make a one-time payment, per parcel being formally released, to the Airport Capital Improvement Fund to permit use of the properties for municipal purposes without further compensation to the airport. The City will make periodic deposits into the fund until there are adequate funds to make a one-time payment per parcel. Compensation for each property will be provided in this manner. For parcels being used for interim, non-aeronautical purposes, the City will compensate the airport based on current fair market rental value. Revenues produced by interim uses will be deposited into a separate Airport Enterprise Fund. These funds must be used for airport purposes.

The property is located in the City of Pompano Beach, Broward County, Florida. The parcels are currently designated as both aeronautical and non-aeronautical uses. The properties to be formally released to the City of Pompano Beach are expected to remain municipal uses. FAA has agreed that the property value for the formal releases will be determined through historical appraisals of lands based on the year they were developed for municipal use. Interest will be assessed on each property in accordance with 49 U.S.C. 47107(o) at a fixed rate from the date the property was converted to a non-aeronautical, municipal use to the date the city makes its one-time payment to the Airport Capital Improvement Fund. Funds received through the release of airport properties will be subsequently reinvested in airport capital improvements, as mutually agreed upon by the FAA and the City.

Documents reflecting the Sponsor's request and the draft agreement are available, by appointment only, for inspection at the City of Pompano Beach municipal offices and the FAA Orlando Airports District Office.

DATES: May 23, 2007.

ADDRESSES: Documents are available for review at the City of Pompano Beach, Office of City Manager, 100 West Atlantic Boulevard, Pompano Beach, Florida 33060, and the FAA Airports District Office, 5950 Hazeltine National Drive, Suite 400, Orlando, FL 32822. Written comments on the Sponsor's request must be delivered or mailed to: Rebecca R. Henry, Program Manager, Orlando Airports District Office, 5950 Hazeltine National Drive, Suite 400, Orlando, FL 32822–5024.

FOR FURTHER INFORMATION CONTACT: Rebecca R. Henry, Program Manager, Orlando Airports District Office, 5950 Hazeltine National Drive, Suite 400, Orlando, FL 32822–5024.

SUPPLEMENTARY INFORMATION: Title 49 United States Code, Section 47153 and FAA Policy requires the FAA to provide public notice prior to the ''waiver'' or ''modification'' of a Federal obligation to use certain airport land for an aeronautical purpose if the Secretary decides it is necessary to protect or advance the interests of the United States in civil aviation or for national defense.

W. Dean Stringer,

Manager, Orlando Airports District Office, Southern Region.

[FR Doc. 07–1988 Filed 4–20–07; 8:45 am]

BILLING CODE 4910–13–M

DEPARTMENT OF TRANSPORTATION

Federal Aviation Administration

RTCA Special Committee 147 Sixty Fifth Plenary: Minimum Operational Performance Standards for Traffic Alert and Collision Avoidance Systems Airborne Equipment/Fourth Meeting of Working Group 75

AGENCY: Federal Aviation Administration (FAA), DOT.

ACTION: Notice of RTCA Special Committee 147 meeting.

SUMMARY: The FAA is issuing this notice to advise the public of a meeting of RTCA Special Committee 147: Minimum Operational Performance Standards for Traffic Alert and Collision Avoidance Systems Airborne Equipment and Working Group 75.

DATES: The meeting will be held May 24, 2007 from 9 a.m.–5 p.m.

ADDRESSES: The meeting will be held at Mercure Toulouse Saint Georges Hotel, Rue St. Jerome-Place Occitane, 31000 Toulouse, Haute-Garonne.

FOR FURTHER INFORMATION CONTACT: RTCA Secretariat, 1828 L Street, NW., Suite 805, Washington, DC 20036; telephone (202) 833–9339; fax (202) 833–9434; Web site *http://www.rtca.org.*

SUPPLEMENTARY INFORMATION: Pursuant to section 10(a) (2) of the Federal Advisory Committee Act (Pub. L. 92–463, 5 U.S.C., Appendix 2), notice is hereby given for a Special Committee 147 meeting and Working Group 75. The agenda will include:

- May 24:
  - Opening Session (Welcome and Introductory Remarks, Review/Approve minutes from February WG75/SC 186 meeting, Review agenda).
  - Notice of matters that WG51 wishes to raise.
  - Notice of matters that SC147 wishes to raise.
  - Notice of any other business.
  - SC–147 Activity Reports.
  - Surveillance Working Group (SWG) Report.
  - Operations Working Group (OWG) Report.
  - Requirements Working Group (RWG) Activities.
  - Comments received on draft DO–185B.
  - FAA TCAS II Program Office Activities.
  - CP115–Consideration of the Way Forward.
  - Plans and Schedule to Complete DO–185B.
  - Closing Session (Other Business, Future Actions/Activities, Date and Place of Next Meeting, Adjourn).

Attendance is open to the interested public but limited to space availability. With the approval of the chairmen, members of the public may present oral statements at the meeting. Persons wishing to present statements or obtain information should contact the person listed in the **FOR FURTHER INFORMATION CONTACT** section. Members of the public may present a written statement to the committee at any time.

Issued in Washington, DC, on April 16, 2007.

Francisco Estrada C.,

RTCA Advisory Committee.

[FR Doc. 07–1989 Filed 4–20–07; 8:45 am]

BILLING CODE 4910–13–M

DEPARTMENT OF TRANSPORTATION

Federal Aviation Administration

Twelfth Meeting; RTCA Special Committee 207/Airport Security Access Control Systems

AGENCY: Federal Aviation Administration (FAA), DOT.

ACTION: Notice of RTCA Special Committee 207 Meeting, Airport Security Access Control Systems.

SUMMARY: The FAA is issuing this notice to advise the public of a meeting of RTCA Special Committee 207, Airport Security Access Control Systems.

DATES: The meeting will be held May 22, 2007 from 9:30 a.m.–4 p.m.

ADDRESSES: The meeting will be held at RTCA, Inc., Conference Rooms, 1828 L Street NW., Suite 805, Washington, DC 20036.

FOR FURTHER INFORMATION CONTACT: (1) RTCA Secretariat, 1828 L Street, NW., Suite 805, Washington, DC, 20036; telephone (202) 833–9339; fax (202) 833–9434; Web site *http://www.rtca.org*.

SUPPLEMENTARY INFORMATION: Pursuant to section 10(a)(2) of the Federal Advisory Committee Act (Pub. L. 92–463, 5 U.S.C., Appendix 2), notice is hereby given for a Special Committee 207 meeting. The agenda will include:

- May 22:
  - Opening Plenary Session (Welcome, Introductions, and Administrative Remarks).
  - Review of Meeting Summary.
  - Review of workgroup leaders meetings.
  - Workgroup Reports.
  - Workgroup 2: Introduction.
  - Workgroup 3: Local Identity Management System.
  - Workgroup 4: Physical Access Control.
  - Workgroup 5: Intrusion Detection Systems.
  - Workgroup 6: Video Systems.
  - Workgroup 7: Security Operating Center.
  - Workgroup 8: Communications Infrastructure.
  - Workgroup 9: General Considerations.
  - Workgroup 10: Appendices.
  - Closing Plenary Session (Other Business, Establish Agenda, Date and Place of Following Meetings).

Attendance is open to the interested public but limited to space availability. With the approval of the chairmen, members of the public may present oral statements at the meeting. Persons wishing to present statements or obtain information should contact the person listed in the **FOR FURTHER INFORMATION CONTACT** section. Members of the public may present a written statement to the committee at any time.

Issued in Washington, DC, on April 16, 2007.

Francisco Estrada C.,

RTCA Advisory Committee.

[FR Doc. 07–1990 Filed 4–20–07; 8:45 am]

BILLING CODE 4910–13–M

DEPARTMENT OF TRANSPORTATION

Federal Aviation Administration

Second Meeting: RTCA Special Committee 210, Cabin Management Systems

AGENCY: Federal Aviation Administration (FAA), DOT.

ACTION: Notice of RTCA Special Committee 210, Cabin Management Systems.

SUMMARY: The FAA is issuing this notice to advise the public of a meeting of RTCA Special Committee 210, Cabin Management.

DATES: The meeting will be held May 9–10, 2007 from 9–5 p.m.

ADDRESSES: The meeting will be held at RTCA, Inc., 1828 L Street, NW., Suite 805, Washington, DC 20036, Colson Board Room.

FOR FURTHER INFORMATION CONTACT: (1) RTCA Secretariat, 1828 L Street, NW., Suite 805, Washington, DC 20036; telephone (202) 833–9339; fax (202) 833–9434; Web site *http://www.rtca.org*.

SUPPLEMENTARY INFORMATION: Pursuant to section 10(a)(2) of the Federal Advisory Committee Act (Pub. L. 92–463, 5 U.S.C., Appendix 2), notice is hereby given for a Special Committee 210, Cabin Management Systems meeting. The agenda will include:

- May 9:
  - Working Group 1, Document Review/Assessment, Garmin Room.
  - Working Group 2, Cabin Management Function Classification, Colson Board Room.
  - Working Group 3, Commercial Off-the-Shelf (COTS) Assessment, ARINC Room.
- May 10:
  - Opening Plenary Session (Welcome and Introductory Remarks, Approval of Seventh Plenary Summary).
  - Approval of Summary of the First Meeting held March 6–7, 2007, RTCA Paper No. 083–07/SC210–003.
  - Terms of Reference—Review Status.
  - Review Working Group (WG) Progress and Identify Issues for Resolution.
  - WG–1, Document Review/Assessment.
  - WG–2, Cabin Management Function Classification.
  - WG–3, Commercial Off-the-Shelf (COTS) Assessment.
  - Document Structure/Review.
  - Assignment of Responsibilities.
  - Closing Plenary Session (Other Business, Establish Agenda for Next Meeting, Date, Place and Time of Next Meeting, Adjourn).

Attendance is open to the interested public but limited to space availability. With the approval of the chairmen, members of the public may present oral statements at the meeting. Persons wishing to present statements or obtain information should contact the person listed in the **FOR FURTHER INFORMATION CONTACT** section. Members of the public may present a written statement to the committee at any time.

Issued in Washington, DC, on April 16, 2007.

Francisco Estrada C.,

RTCA Advisory Committee.

[FR Doc. 07–1991 Filed 4–20–07; 8:45 am]

BILLING CODE 4910–13–M

DEPARTMENT OF TRANSPORTATION

Federal Motor Carrier Safety Administration

[Docket No. FMCSA–2007–27554]

Notice of Request for Information (RFI): Accident Recordkeeping Requirements

AGENCY: Federal Motor Carrier Safety Administration (FMCSA), DOT.

ACTION: Notice; request for comments.

SUMMARY: In accordance with the Paperwork Reduction Act of 1995, FMCSA invites public comment on its intent to request approval from the Office of Management and Budget (OMB) to revise the information collection (IC) entitled, ''Accident Recordkeeping Requirements,'' covered by OMB Control Number 2126–0009. This information collection is necessary for FMCSA to assess the effectiveness of the safety management controls of motor carriers. The IC is currently due to expire on June 30, 2007.

DATES: We must receive your comments on or before June 22, 2007.

ADDRESSES: You may submit comments identified by any of the following methods. Please identify your comments by the FMCSA Docket Number FMCSA–20 [number].

- *Web site: http://dms.dot.gov.* Follow instructions for submitting comments to the Docket.
- *Fax:* 202–493–2251.
- *Mail:* U.S. Department of Transportation, Docket Management Facility, 400 Seventh Street, SW., Plaza level, Washington, DC 20590–0001.
- *Hand Delivery:* Plaza level of the Nassif, Building, 400 Seventh Street, SW., Washington, DC 20590–0001, between 9 a.m. and 5 p.m., e.t., Monday through Friday, except Federal holidays.

Docket: For access to the Docket Management System (DMS) to read

background documents or comments received, go to *http://dms.dot.gov* at any time or to the plaza level of the Nassif Building, 400 Seventh Street, SW., Washington, DC 20590–0001, between 9 a.m. and 5 p.m., e.t., Monday through Friday, except Federal holidays. The DMS is available electronically 24 hours each day, 365 days each year. If you want notification of receipt of your comments, please include a self-addressed, stamped envelope, or postcard or print the acknowledgement page that appears after submitting comments online.

Privacy Act: Anyone is able to search the electronic form of all comments received into any of our dockets by the name of the individual submitting the comment (or signing the comment, if submitted on behalf of an association, business, labor union, etc.). You may review DOT's complete Privacy Act Statement in the **Federal Register** on April 11, 2000 (65 FR 19477), or you may visit *http://dms.dot.gov*.

FOR FURTHER INFORMATION CONTACT: Mr. Tom Yager, Chief, Driver & Carrier Operations Division, Office of Bus & Truck Standards and Development (MC–PSD), Department of Transportation, Federal Motor Carrier Safety Administration, 400 Seventh Street, SW., Washington DC 20590–0001. Telephone: 202–366–4009; e-mail *MCPSD@dot.gov*.

SUPPLEMENTARY INFORMATION:

Title: Accident Recordkeeping Requirements.

OMB Control Number: 2126–0009.

Type of Request: Revision of a currently-approved collection.

Respondents: Motor Carriers, Commercial Motor Vehicle Operators, State Licensing Agencies.

Estimated Number of Respondents: 106,800 motor carriers.

Estimated Time per Response: 18 minutes.

Expiration Date: June 30, 2007.

Frequency of Response: Once per year.

Estimated Total Annual Burden: 32,040 hours [106,800 motor carriers recording an accident × 18 minutes per response/60 minutes = 32,040].

Background: Title 49 CFR 390.15(b), requires motor carriers to make all records and information pertaining to crashes (accidents) specified in paragraphs (b)(1) and (b)(2) of that section available to an authorized representative or special agent of the FMCSA upon request, or as part of an inquiry. Interstate motor carriers are required to maintain an ''accident register'' consisting of a list of all accidents (both interstate and intrastate) involving their commercial motor vehicles (CMVs) (49 CFR 390.15(b)). The information for each accident must include, at a minimum, the following elements: Date of accident; city or town in which or most near where the accident occurred, and the State in which the accident occurred; driver name; number of injuries; number of fatalities; and whether hazardous materials, other than fuel spilled from the fuel tanks of motor vehicles involved in the accident, were released. In addition, the register must contain copies of all accident reports required by State or other governmental entities or insurers. Motor carriers must maintain the required information about CMV accidents in their accident registers for three years after the date of the accident, instead of the former one year. This information collection supports the DOT strategic goal of safety by requiring motor carriers to gather and record information on crashes involving their CMVs. Likewise, the FMCSA is strengthening its ability to assess motor carriers' safety performance and to use that information to help motor carriers to prevent crashes and to reduce their severity. FMCSA uses this data to enable it to direct its enforcement resources to the motor carriers with the weakest safety records.

Definitions: The word ''*accident*'' is defined as an occurrence involving a commercial motor vehicle operating on a public road in interstate or intrastate commerce which results in: (1) A fatality; (2) bodily injury to a person who, as a result of the injury, receives medical treatment away from the scene of the accident; or (3) one or more motor vehicles incurring disabling damage as a result of the accident, requiring the motor vehicle to be transported away from the scene by a tow truck or other motor vehicle (49 CFR 390.5).

Public Commentd Invited: You are asked to comment on any aspect of this information collection, including: (1) Whether the proposed collection is necessary for the FMCSA's performance; (2) the accuracy of the estimated burden; (3) ways for the FMCSA to enhance the quality, usefulness, and clarity of the collected information; and (4) ways that the burden could be minimized without reducing the quality of the collected information. The agency will summarize or include your comments in the request for OMB's clearance of this information collection.

Issued on: April 16, 2007.

D. Marlene Thomas,

Associate Administrator Administration.

[FR Doc. E7–7626 Filed 4–20–07; 8:45 am]

BILLING CODE 4910–EX–P

DEPARTMENT OF TRANSPORTATION

Federal Motor Carrier Safety Administration

[Docket No. FMCSA–2006–26304]

Agency Information Collection Activities; Revision of Approved Information Collections: OMB Control Numbers 2126–0010 (Motor Carrier Safety Assistance Program) and 2126–0025 (Transportation of Household Goods; Consumer Protection)

AGENCY: Federal Motor Carrier Safety Administration (FMCSA), DOT.

ACTION: Notice and request for comments.

SUMMARY: The FMCSA invites public comment on its intent to request approval from the Office of Management and Budget (OMB) to revise two (2) information collections (ICs) entitled, ''Motor Carrier Safety Assistance Program'' (2126–0010) and ''Transportation of Household Goods; Consumer Protection'' (2126–0025). These revised ICs are necessary to ensure that motor carriers and the States comply with changes made by various provisions of the Safe Accountable, Flexible, Efficient Transportation Equity Act: A Legacy for Users (SAFETEA–LU), that will be implemented in a separate final rule. On November 20, 2006, the agency published a **Federal Register** notice with a 60-day comment period to solicit the public's views on three information collections. The agency received one comment, which contained no substantive remarks pertaining to any of the information collections, and consequently was not incorporated into our supporting statement. We are required to publish this notice in the **Federal Register** by the Paperwork Reduction Act of 1995 and implementing regulations.

DATES: Comments must be submitted on or before May 23, 2007.

ADDRESSES: You may submit comments to the Office of Information and Regulatory Affairs, Office of Management and Budget, 725 Seventeenth Street, NW., Washington, DC 20503, *Attention: DOT/FMCSA Desk Officer*.

Privacy Act: Anyone is able to search the electronic form of all comments received into any of our dockets by the name of the individual submitting the comment (or signing the comment, if submitted on behalf of an association, business, labor union, etc.). You may review DOT's complete Privacy Act Statement in the **Federal Register** on April 11, 2000 (65 FR 19477), or you may visit *http://dms.dot.gov*.

FOR FURTHER INFORMATION CONTACT: Requests for further information, including copies of the proposed collection of information and supporting documentation can be obtained by contacting Mr. Frederic L. Wood, Office of Chief Counsel, Regulatory Affairs Division (MC–CCR), Federal Motor Carrier Safety Administration, Room 8201, 400 Seventh Street, SW., Washington, DC 20590; telephone (202) 366–0834. Office hours are from 9 a.m. to 5 p.m., Monday through Friday, except Federal holidays.

SUPPLEMENTARY INFORMATION: The information stated below reflects the proposed changes to various regulatory provisions impacted by SAFETEA–LU and the new total annual burden hours for each.

(1) *Title:* Motor Carrier Safety Assistance Program.

OMB Control No.: 2126–0010.

Form No.: Forms MCSAP–1, MCSAP–2, and MCSAP–2A.

Type of Review: Revision of a currently approved collection.

Respondents: State Grant Applicants.

Number of Respondents: 52 (per quarter).

Estimated Time per Response: 80 hours.

Expiration Date: November 30, 2007.

Frequency: Annually (grant application) and quarterly (reports).

Total Annual Burden: 11,232 hours.

(2) *Title:* Transportation of Household Goods; Consumer Protection.

OMB Control No.: 2126–0025.

Form No.: Form MCSA–2P.

Type of Review: Revision of a currently approved collection.

Respondents: Motor Carriers and Individual Shippers of Household Goods.

Number of Respondents: 5,400.

Estimated Time per Response: Varies from 30 minutes to distribute consumer publication to 150 minutes to conduct physical survey.

Expiration Date: August 31, 2008.

Frequency: On occasion.

Total Annual Burden: 4,552,737 hours.

Background

Summarized below is information for the two (2) information collection requests subject to this notice. The information collection requests explained below are based on changes required by the enactment of SAFETEA–LU, Pub. L. 109–59, 119 Stat. 1144 (Aug. 10, 2005). We also correct previously published information regarding a third information collection.

First, the Motor Carrier Safety Assistance Program (MCSAP) requires that the Secretary of Transportation (Secretary) review reports submitted by the States and conduct inspections to continuously evaluate a State's enforcement plan. Sections 401 through 404 of the Surface Transportation Assistance Act of 1982 (Pub. L. 97–424, Jan. 6, 1983) (STAA), as amended by 49 U.S.C. 31100 et seq., established a program of financial assistance to the States to implement programs to enforce Federal and compatible State rules, regulations, standards, and orders applicable to commercial motor vehicle (CMV) safety. SAFETEA–LU amended 49 U.S.C. 31102(b)(1) to modify the conditions a State must meet to qualify for grant funds through MCSAP and now requires the following conditions be addressed in the State's Commercial Vehicle Safety Plan: (1) Deploying technology as part of performance-based activities to enhance the efficiency and effectiveness of CMV safety programs; (2) disseminating information as part of the CMV and non-CMV licensing examination information on best practices for driving safely in the vicinity of non-commercial and commercial motor vehicles; (3) conducting comprehensive and highly visible traffic enforcement and CMV safety inspection programs in high-risk areas; (4) ensuring that inspections of certain passenger vehicles are conducted at a station or other facility where a motor carrier may make a planned stop; and (5) allowing the use of funds to conduct documented enforcement of State traffic laws. The overall impact of these financial assistance provisions decreases total burden hours of information collection 2126–0010 by an estimated 622 hours, chiefly as a result of non-CMV traffic enforcement activities.

Second, in the Motor Carrier Safety Improvement Act of 1999 (Pub. L. 106–159, 113 Stat. 1749, Dec. 9, 1999) (MCSIA), Congress authorized the Agency to regulate household goods carriers engaged in interstate operations for individual shippers. Title IV, Subtitle B of SAFETEA-LU amended various provisions of existing law regarding household goods transportation. Several of those provisions, specifically addressing: Definitions (section 4202); payment of rates (section 4203); carrier operations (section 4205); liability of carriers under receipts and bills of lading (section 4207); arbitration requirements (section 4208); and penalties for holding goods hostage (section 4210), result in changes that affect information collection activities. These provisions require corresponding changes to the ''Your Rights and Responsibilities When You Move'' consumer pamphlet. Section 4205 also requires the motor carrier to provide to the shipper a copy of the publication ''Ready to Move?'' (or its successor publication). These publications provide concise, valuable consumer protection information regarding the legal rights of individual shippers. The household goods transportation provisions of SAFETEA–LU increase total paperwork burdens of information collection 2126–0025 by an estimated 182,700 burden hours compared to the previously approved burden. The largest portion of this increase is generated by requirements in section 4205 regarding the estimate of the transportation charges and the physical survey of the household goods.

Third, the separate final rule will not affect the currently-approved information clearance OMB Control Number 2126–0011, entitled ''Commercial Driver Licensing and Test Standards,'' which was referenced in the previous **Federal Register** notice. After we published the 60-day notice, the OMB approved this information collection on December 21, 2006, at a revised total of 1,210,401 burden hours, with an expiration date of April 30, 2007. This change is independent of, and not caused in any way by, the provisions in the final rule. We anticipate no additional change in the burden hours for this information collection at this time. We seek public comment on this assumption.

Public Comments Invited: You are asked to comment on any aspect of the information collections referenced here, including: (1) Whether the proposed collection is necessary for the FMCSA's performance; (2) the accuracy of the estimated burden; (3) ways for the FMCSA to enhance the quality, usefulness, and clarity of the collected information; and (4) ways that the burden could be minimized without reducing the quality of the collected information.

Issued on: April 13, 2007.

D. Marlene Thomas,

Associate Administrator Administration.

[FR Doc. E7–7627 Filed 4–20–07; 8:45 am]

BILLING CODE 4910–EX–P

DEPARTMENT OF TRANSPORTATION

Federal Motor Carrier Safety Administration

[Docket No. FMCSA–2006–24932]

Commercial Driver's License (CDL) Standards; Volvo Trucks North America, Inc.'s Exemption Application

AGENCY: Federal Motor Carrier Safety Administration (FMCSA), DOT.

ACTION: Notice of final disposition; granting of application for exemption.

SUMMARY: The FMCSA announces its decision to grant Volvo Trucks North America, Inc.'s (Volvo) application for an exemption for seven of its drivers to enable them to test-drive commercial motor vehicles (CMVs) in the United States without a commercial driver's license (CDL) issued by one of the States. Volvo requested that the exemption cover seven Swedish engineers and technicians who will test drive CMVs for Volvo within the U.S. They stated the exemption is needed to support a Volvo field test to meet future air quality standards, and to test-drive Volvo prototype vehicles to verify results in ''real world'' environments. Each of these drivers holds a CDL issued in Sweden, but lacks the U.S. residency necessary to obtain a CDL issued by one of the States in the U.S. The FMCSA believes the knowledge and skills testing and training program that drivers must undergo to obtain a Swedish CDL ensures that these drivers will achieve a level of safety that is equivalent to, or greater than, the level of safety achieved without the exemption.

DATES: This decision is effective April 23, 2007. The exemption expires on April 23, 2009.

FOR FURTHER INFORMATION CONTACT: Mr. Thomas Yager, Chief, Driver and Carrier Operations Division, Office of Bus and Truck Standards and Operations, MC–PSD, Federal Motor Carrier Safety Administration, 400 Seventh Street, SW., Washington, DC 20590–0001. Telephone: 202–366–4009. E-mail: *MCPSD@dot.gov*.

SUPPLEMENTARY INFORMATION:

Background

Under 49 U.S.C. 31315 and 31136(e), FMCSA may grant an exemption from the CDL requirements in 49 CFR 383.23 for a two-year period if it finds ''such exemption would likely achieve a level of safety that is equivalent to, or greater than, the level that would be achieved absent such exemption'' (49 CFR 381.305 (a)). FMCSA has evaluated Volvo's application on its merits and decided to grant the exemption for seven of Volvo's engineers and technicians for a two-year period.

Volvo Application for an Exemption

Volvo applied for an exemption from the 49 CFR 383.23 requirement that the operator of a CMV obtain a CDL. This section of the Federal Motor Carrier Safety Regulations (FMCSRs) sets forth the standards that States must employ in issuing CDLs to drivers operating in commerce. In the U.S., an individual must be a resident of a State in order to qualify for a CDL.[1] The Volvo drivers-employees for whom this exemption is sought are all citizens and residents of Sweden; therefore, they cannot apply for a CDL in any State of the United States. A copy of the request for exemption from section 383.23 is in the docket identified at the beginning of this notice.

Swedish Drivers

This exemption enables the following drivers to test-drive in the U.S. Volvo CMVs that are assembled, sold or primarily used in the U.S.: Freddy Blixt, Goran Alsen, Kjell Jansson, Johnny Adolfsson, Lars Svensson, Peter Hofsten, and Thorbjorn Ohlund.

Collectively, these drivers form a team of engineers and technicians. Volvo currently employs these drivers in Sweden, and wants them to be able to test-drive Volvo prototype vehicles at its test site and in the vicinity of Phoenix, Arizona, to verify vehicle results in ''real world'' environments. These drivers would test-drive Volvo CMVs that are assembled, sold or primarily used in the U.S. They are highly trained, experienced CMV operators with valid Swedish-issued CDLs. Because each of the drivers was required to satisfy strict CDL testing standards in Sweden to obtain a CDL, and has extensive training and experience operating CMVs, Volvo believes that the exemption will maintain a level of safety equivalent to the level of safety that would be obtained absent the exemption.

Method to Ensure an Equivalent or Greater Level of Safety

According to Volvo, drivers applying for a Swedish-issued CDL must undergo a training program and pass knowledge and skills tests. Volvo believes the knowledge and skills tests and training program that Swedish drivers undergo to obtain a Swedish CDL ensure the exemption would provide a level of safety that is equivalent to, or greater than, the level of safety obtained by complying with the U.S. requirement for a CDL. Once a driver is granted a Swedish CDL, he or she is allowed to drive any CMV currently allowed on Swedish roads. There are no limits to types or weights of vehicles that may be operated by the drivers.

Therefore, the process for obtaining a Swedish-issued CDL is considered to be comparable to, or as effective as, the requirements of 49 CFR part 383.

Comments

The Agency received one comment in response to its request for public comments (71 FR 45095, August 8, 2006). The individual expressed concern that Volvo was not employing U.S. CDL drivers for these tests, but offered no substantive comments concerning the ability of the drivers to operate CMV's safely in the U.S. The docket number of this matter is referenced at the beginning of this notice.

FMCSA Decision

The FMCSA decision to grant these drivers an exemption from section 383.23 is based on the merits of the application for exemption, the rigorous knowledge and skills testing of Swedish drivers concerning the safe operation of CMVs, and consideration of the comment submitted in response to the public notice.

Terms and Conditions for the Exemption

After considering the comment to the docket and based upon evaluation of the application for an exemption, FMCSA grants Volvo an exemption from the CDL requirements in 49 CFR 383.23 for seven drivers, identified under the ''Swedish Drivers'' heading above, to test-drive CMVs within the U.S., subject to the following terms and conditions: (1) That these drivers will be subject to drug and alcohol regulations, including testing, as provided in 49 CFR part 382, (2) that these drivers are subject to the same driver disqualification rules under 49 CFR parts 383 and 391 that apply to other CMV drivers in the U.S., (3) that these drivers keep a copy of the exemption on the vehicle at all times, (4) that Volvo notify FMCSA in writing of any accident, as defined in 49 CFR 390.5, involving one of the exempted drivers, and (5) that Volvo notify FMCSA in writing if any driver is convicted of a disqualifying offense described in sections 383.51 or 391.15 of the FMCSRs.

In accordance with 49 U.S.C. 31315 and 31136(e), the exemption will be valid for 2 years unless revoked earlier

[1] Although 49 CFR 383.23 indicates that these drivers could obtain a Nonresident CDL, few States are currently issuing Nonresident CDLs.

by the FMCSA. The exemption will be revoked if: (1) The drivers for Volvo fail to comply with the terms and conditions of the exemption; (2) the exemption has resulted in a lower level of safety than was maintained before it was granted; or (3) continuation of the exemption would not be consistent with the goals and objectives of 49 U.S.C. 31315 and 31136.

Issued on: April 13, 2007.

Rose A. McMurray,

Chief Safety Officer Assistant Administrator.

[FR Doc. E7–7638 Filed 4–20–07; 8:45 am]

BILLING CODE 4910–EX–P

DEPARTMENT OF TRANSPORTATION

Federal Motor Carrier Safety Administration

[Docket No. FMCSA–2006–25756]

Commercial Driver's License (CDL) Standards; Volvo Trucks North America, Inc.'s Exemption Application

AGENCY: Federal Motor Carrier Safety Administration (FMCSA), DOT.

ACTION: Notice of final disposition; granting of application for exemption.

SUMMARY: The FMCSA announces its decision to grant Volvo Trucks North America, Inc.'s (Volvo) application for an exemption for three of its drivers to enable them to test-drive commercial motor vehicles (CMVs) in the United States without a commercial driver's license (CDL) issued by one of the States. Volvo had requested that the exemption cover three Swedish engineers and technicians who will test drive CMVs for Volvo within the U.S. They stated the exemption is needed to support a Volvo field test to meet future air quality standards, and to test-drive Volvo prototype vehicles to verify results in ''real world'' environments. Each of these drivers holds a valid CDL issued in Sweden, but lacks the U.S. residency necessary to obtain a CDL issued by one of the States in the U.S. The FMCSA believes the knowledge and skills testing and training program that drivers must undergo to obtain a Swedish CDL ensures that these drivers will achieve a level of safety that is equivalent to, or greater than, the level of safety achieved without the exemption.

DATES: This decision is effective April 20, 2007. The exemption expires on April 23, 2009.

FOR FURTHER INFORMATION CONTACT: Mr. Thomas Yager, Chief, Driver and Carrier Operations Division, Office of Bus and Truck Standards and Operations, MC–PSD, Federal Motor Carrier Safety Administration, 400 Seventh Street, SW., Washington, DC 20590–0001. Telephone: 202–366–4009. E-mail: *MCPSD@dot.gov.*

SUPPLEMENTARY INFORMATION:

Background

Under 49 U.S.C. 31315 and 31136(e), FMCSA may grant an exemption from the CDL requirements in 49 CFR 383.23 for a two-year period if it finds ''such exemption would likely achieve a level of safety that is equivalent to, or greater than, the level that would be achieved absent such exemption'' (49 CFR 381.305 (a)). FMCSA has evaluated Volvo's application on its merits and decided to grant the exemption for three of Volvo's engineers and technicians for a two-year period.

Volvo Application for an Exemption

Volvo applied for an exemption from the 49 CFR 383.23 requirement that the operator of a CMV obtain a CDL. This section of the Federal Motor Carrier Safety Regulations (FMCSRs) sets forth the standards that States must employ in issuing CDLs to drivers operating in commerce. In the U.S., an individual must be a resident of a State in order to qualify for a CDL.[1] The Volvo drivers-employees for whom this exemption is sought are all citizens and residents of Sweden; therefore, they cannot apply for a CDL in any State of the United States. A copy of the request for exemption from section 383.23 is in the docket identified at the beginning of this notice.

Swedish Drivers

This exemption enables the following drivers to test-drive in the U.S. Volvo CMVs that are assembled, sold or primarily used in the U.S.: Hans Leif Esbjorn Berg, Ingemar Karlsson, and Rolf Stefan Wikner.

Collectively, these drivers form a team of engineers and technicians. Volvo currently employs these drivers in Sweden, and wants them to be able to test-drive Volvo prototype vehicles at its test site and in the vicinity of Phoenix, Arizona, to verify vehicle results in ''real world'' environments. These drivers would test-drive Volvo CMVs that are assembled, sold or primarily used in the U.S. They are highly trained, experienced CMV operators with valid Swedish-issued CDLs. Because each of the drivers was required to satisfy strict CDL testing standards in Sweden to obtain a CDL, and has extensive training and experience operating CMVs, Volvo believes that the exemption will maintain a level of safety equivalent to the level of safety that would be obtained absent the exemption.

Method To Ensure an Equivalent or Greater Level of Safety

According to Volvo, drivers applying for a Swedish-issued CDL must undergo a training program and pass knowledge and skills tests. Volvo believes the knowledge and skills tests and training program that these drivers undergo to obtain a Swedish CDL ensure the exemption would provide a level of safety that is equivalent to, or greater than, the level of safety obtained by complying with the U.S. requirement for a CDL. Once a driver is granted a Swedish CDL, he or she is allowed to drive any CMV currently allowed on Swedish roads. There are no limits to types or weights of vehicles that may be operated by the drivers. In addition, Volvo has submitted a copy of the Swedish driving record of each of these drivers, and each has a driving record free of violations.

The FMCSA had previously determined that the process for obtaining a Swedish-issued CDL adequately assesses the driver's ability to operate CMVs in the U.S. Therefore, the process for obtaining a Swedish-issued CDL is considered to be comparable to, or as effective as, the requirements of 49 CFR part 383.

Comments

The FMCSA received no response to its request for public comments published in the **Federal Register** on December 22, 2006 (71 FR 77090).

FMCSA Decision

The FMCSA decision to grant these drivers an exemption from section 383.23 is based on the merits of the application for exemption, and the rigorous knowledge and skills testing of Swedish drivers concerning the safe operation of CMVs.

Terms and Conditions for the Exemption

Based upon evaluation of the application for an exemption, FMCSA grants Volvo an exemption from the Federal CDL requirement in 49 CFR 383.23 for three drivers, identified under the ''Swedish Drivers'' heading above, to test-drive CMVs within the U.S., subject to the following terms and conditions: (1) That these drivers will be subject to drug and alcohol regulations, including testing, as provided in 49 CFR part 382, (2) that these drivers are subject to the same driver

[1] Although 49 CFR 383.23 indicates that these drivers could obtain a Nonresident CDL, few States are currently issuing Nonresident CDLs.

disqualification rules under 49 CFR parts 383 and 391 that apply to other CMV drivers in the U.S., (3) that these drivers keep a copy of the exemption on the vehicle at all times, (4) that Volvo notify FMCSA in writing of any accident, as defined in 49 CFR 390.5, involving one of the exempted drivers, and (5) that Volvo notify FMCSA in writing if any driver is convicted of a disqualifying offense described in section 383.51 or 391.15 of the FMCSRs.

In accordance with 49 U.S.C. 31315 and 31136(e), the exemption will be valid for 2 years unless revoked earlier by the FMCSA. The exemption will be revoked if: (1) The drivers for Volvo fail to comply with the terms and conditions of the exemption; (2) the exemption has resulted in a lower level of safety than was maintained before it was granted; or (3) continuation of the exemption would not be consistent with the goals and objectives of 49 U.S.C. 31315 and 31136.

Issued on: April 17, 2007.

Larry W. Minor,

Acting, Associate Administrator, Policy and Program Development.

[FR Doc. E7–7639 Filed 4–20–07; 8:45 am]

BILLING CODE 4910–EX–P

DEPARTMENT OF TRANSPORTATION

Maritime Administration

[Docket No. MARAD 2007–27906]

Information Collection Available for Public Comments and Recommendations

ACTION: Notice and request for comments.

SUMMARY: In accordance with the Paperwork Reduction Act of 1995, this notice announces the Maritime Administration's (MARAD's) intention to request extension of approval for three years of a currently approved information collection.

DATES: Comments should be submitted on or before June 22, 2007.

FOR FURTHER INFORMATION CONTACT: Linden Houston, Maritime Administration, MAR–830, 400 Seventh Street, SW., Washington, DC 20590. Telephone: (202) 366–4839, FAX: (202) 366–5123; or E-mail: *Linden.Houston@dot.gov*.

Copies of this collection can also be obtained from that office.

SUPPLEMENTARY INFORMATION:

Title of Collection: Application for Conveyance of Port Facility Property, formerly, Port Facility Conveyance Information.

Type of Request: Extension of currently approved information collection.

OMB Control Number: 2133–0524.

Form Numbers: MA–1047.

Expiration Date of Approval: Three years from date of approval by the Office of Management and Budget.

Summary of Collection of Information: Public Law 103–160, which is included in 40 U.S.C. 554 authorizes the Department of Transportation to convey to public entities surplus Federal property needed for the development or operation of a port facility. The information collection will allow MARAD to approve the conveyance of property and administer the port facility conveyance program.

Need and Use of the Information: The information collection is necessary for MARAD to determine whether (1) the community is committed to the redevelopment plan; (2) the plan is in the best interests of the public; and (3) the property is being used in accordance with the terms of the conveyance and applicable statutes and regulations.

Description of Respondents: Eligible state and local public entities.

Annual Responses: Ten respondents.

Annual Burden: 1280 burden hours.

Comments: Comments should refer to the docket number that appears at the top of this document. Written comments may be submitted to the Docket Clerk, U.S. DOT Dockets, Room PL–401, 400 Seventh Street, SW., Washington, DC 20590. Comments may also be submitted by electronic means via the Internet at *http://dms.dot.gov/submit*. Specifically address whether this information collection is necessary for proper performance of the functions of the agency and will have practical utility, accuracy of the burden estimates, ways to minimize this burden, and ways to enhance the quality, utility, and clarity of the information to be collected. All comments received will be available for examination at the above address between 10 a.m. and 5 p.m. EDT (or EST), Monday through Friday, except Federal Holidays. An electronic version of this document is available on the World Wide Web at *http://dms.dot.gov*.

Privacy Act

Anyone is able to search the electronic form of all comments received into any of our dockets by the name of the individual submitting the comment (or signing the comment, if submitted on behalf of an association, business, labor union, etc.). You may review DOT's complete Privacy Act Statement in the **Federal Register** published on April 11, 2000 (Volume 65, Number 70; Pages 19477–78) or you may visit *http://www.dms.dot.gov*.

Authority: 49 CFR 1.66.

By Order of the Maritime Administrator.

Dated: April 12, 2007.

Murray Bloom,

Acting Secretary, Maritime Administration.

[FR Doc. E7–7671 Filed 4–20–07; 8:45 am]

BILLING CODE 4910–81–P

DEPARTMENT OF TRANSPORTATION

Maritime Administration

[Docket No. MARAD–2007–27905]

Information Collection Available for Public Comments and Recommendations

ACTION: Notice and request for comments.

SUMMARY: In accordance with the Paperwork Reduction Act of 1995, this notice announces the Maritime Administration's (MARAD's) intention to request extension of approval for three years of a currently approved information collection.

DATES: Comments should be submitted on or before June 22, 2007.

FOR FURTHER INFORMATION CONTACT: Rodney McFadden, Maritime Administration, MAR–410, 400 Seventh Street, SW., Washington, DC 20590. Telephone: (202) 366–2647, Fax: (202) 366–7403; or E-mail: *rodney.mcfadden@dot.gov*. Copies of this collection can also be obtained from that office.

SUPPLEMENTARY INFORMATION:

Title of Collection: Elements of Request for Course Approval.

Type of Request: Extension of a currently approved collection.

OMB Control Number: 2133–0535.

Form Numbers: None.

Expiration Date of Approval: Three years from date of approval by the Office of Management and Budget.

Summary of Collection of Information: Under this proposed voluntary collection, public and private maritime security training course providers may choose to provide the Maritime Administration (MARAD) with information concerning the content and operation of their courses. MARAD will use this information to evaluate whether the course meets the training standards and curriculum promulgated under Section 109 of the Maritime Transportation Security Act of 2002 (MTSA) (Pub. L. 107–295). Courses found to meet these standards will receive a course approval.

Need and Use of the Information: This information collection is needed to facilitate the approval of maritime security training courses that meet the standards and curriculum developed under the MTSA.

Description of Respondents: Respondents are public and private maritime security course training providers.

Annual Responses: 300.

Annual Burden: 3,000 hours.

Comments: Comments should refer to the docket number that appears at the top of this document. Written comments may be submitted to the Docket Clerk, U.S. DOT Dockets, Room PL–401, 400 Seventh Street, SW., Washington, DC 20590. Comments also may be submitted by electronic means via the Internet at *http://dms.dot.gov/submit.* Specifically address whether this information collection is necessary for proper performance of the functions of the agency and will have practical utility, accuracy of the burden estimates, ways to minimize this burden, and ways to enhance the quality, utility, and clarity of the information to be collected. All comments received will be available for examination at the above address between 10 a.m. and 5 p.m. EDT (or EST), Monday through Friday, except Federal holidays. An electronic version of this document is available on the World Wide Web at *http://dms.dot.gov.*

By Order of the Maritime Administrator.

Dated: April 12, 2007.

Murray Bloom,

Acting Secretary, Maritime Administration.

[FR Doc. E7–7693 Filed 4–20–07; 8:45 am]

BILLING CODE 4910–81–P

DEPARTMENT OF TRANSPORTATION

Maritime Administration

[Docket No. MARAD–2007–27941]

Requested Administrative Waiver of the Coastwise Trade Laws

AGENCY: Maritime Administration, Department of Transportation.

ACTION: Invitation for public comments on a requested administrative waiver of the Coastwise Trade Laws for the vessel BEST BUDDIES.

SUMMARY: As authorized by Pub. L. 105–383 and Pub. L. 107–295, the Secretary of Transportation, as represented by the Maritime Administration (MARAD), is authorized to grant waivers of the U.S.-build requirement of the coastwise laws under certain circumstances. A request for such a waiver has been received by MARAD. The vessel, and a brief description of the proposed service, is listed below. The complete application is given in DOT docket MARAD–2007–27941 at *http://dms.dot.gov.* Interested parties may comment on the effect this action may have on U.S. vessel builders or businesses in the U.S. that use U.S.-flag vessels. If MARAD determines, in accordance with Pub. L. 105–383 and MARAD's regulations at 46 CFR part 388 (68 FR 23084; April 30, 2003), that the issuance of the waiver will have an unduly adverse effect on a U.S.-vessel builder or a business that uses U.S.-flag vessels in that business, a waiver will not be granted. Comments should refer to the docket number of this notice and the vessel name in order for MARAD to properly consider the comments. Comments should also state the commenter's interest in the waiver application, and address the waiver criteria given in § 388.4 of MARAD's regulations at 46 CFR part 388.

DATES: Submit comments on or before May 23, 2007.

ADDRESSES: Comments should refer to docket number MARAD–2007–27941. Written comments may be submitted by hand or by mail to the Docket Clerk, U.S. DOT Dockets, Room PL–401, Department of Transportation, 400 7th St., SW., Washington, DC 20590–0001. You may also send comments electronically via the Internet at *http://dmses.dot.gov/submit/.* All comments will become part of this docket and will be available for inspection and copying at the above address between 10 a.m. and 5 p.m., E.T., Monday through Friday, except federal holidays. An electronic version of this document and all documents entered into this docket is available on the World Wide Web at *http://dms.dot.gov.*

FOR FURTHER INFORMATION CONTACT: Joann Spittle, U.S. Department of Transportation, Maritime Administration, MAR–830 Room 7201, 400 Seventh Street, SW., Washington, DC 20590. Telephone 202–366–5979.

SUPPLEMENTARY INFORMATION: As described by the applicant the intended service of the vessel BEST BUDDIES is:

Intended Use: ''sailboat charters primarily for non U.S. citizens''

Geographic Region: Maine, New Hampshire, Massachusetts, Rhode Island, Connecticut, New York, New Jersey, Delaware, Maryland, and Florida.

Privacy Act

Anyone is able to search the electronic form of all comments received into any of our dockets by the name of the individual submitting the comment (or signing the comment, if submitted on behalf of an association, business, labor union, etc.). You may review DOT's complete Privacy Act Statement in the **Federal Register** published on April 11, 2000 (Volume 65, Number 70; Pages 19477–78) or you may visit *http://dms.dot.gov.*

Dated: April 16, 2007.

By order of the Maritime Administrator.

Daron T. Threet,

Secretary, Maritime Administration.

[FR Doc. E7–7679 Filed 4–20–07; 8:45 am]

BILLING CODE 4910–81–P

DEPARTMENT OF TRANSPORTATION

Maritime Administration

[Docket No. MARAD–2007–27943]

Requested Administrative Waiver of the Coastwise Trade Laws

AGENCY: Maritime Administration, Department of Transportation.

ACTION: Invitation for public comments on a requested administrative waiver of the Coastwise Trade Laws for the vessel BUGGALOO.

SUMMARY: As authorized by Public Law 105–383 and Public Law 107–295, the Secretary of Transportation, as represented by the Maritime Administration (MARAD), is authorized to grant waivers of the U.S.-build requirement of the coastwise laws under certain circumstances. A request for such a waiver has been received by MARAD. The vessel, and a brief description of the proposed service, is listed below. The complete application is given in DOT docket MARAD–2007–27943 at *http://dms.dot.gov.* Interested parties may comment on the effect this action may have on U.S. vessel builders or businesses in the U.S. that use U.S.-flag vessels. If MARAD determines, in accordance with Public Law 105–383 and MARAD's regulations at 46 CFR part 388 (68 FR 23084; April 30, 2003), that the issuance of the waiver will have an unduly adverse effect on a U.S.-vessel builder or a business that uses U.S.-flag vessels in that business, a waiver will not be granted. Comments should refer to the docket number of this notice and the vessel name in order for MARAD to properly consider the comments. Comments should also state the commenter's interest in the waiver application, and address the waiver criteria given in § 388.4 of MARAD's regulations at 46 CFR part 388.

DATES: Submit comments on or before May 23, 2007.

ADDRESSES: Comments should refer to docket number MARAD–2007–27943. Written comments may be submitted by hand or by mail to the Docket Clerk, U.S. DOT Dockets, Room PL–401, Department of Transportation, 400 7th St., SW., Washington, DC 20590–0001. You may also send comments electronically via the Internet at *http://dmses.dot.gov/submit/.* All comments will become part of this docket and will be available for inspection and copying at the above address between 10 a.m. and 5 p.m., E.T., Monday through Friday, except Federal holidays. An electronic version of this document and all documents entered into this docket is available on the World Wide Web at *http://dms.dot.gov.*

FOR FURTHER INFORMATION CONTACT: Joann Spittle, U.S. Department of Transportation, Maritime Administration, MAR–830 Room 7201, 400 Seventh Street, SW., Washington, DC 20590. Telephone 202–366–5979.

SUPPLEMENTARY INFORMATION: As described by the applicant the intended service of the vessel BUGGALOO is:

Intended Use: ''Six pack charter for sport fishing''.

Geographic Region: California, Oregon, and Washington.

Privacy Act

Anyone is able to search the electronic form of all comments received into any of our dockets by the name of the individual submitting the comment (or signing the comment, if submitted on behalf of an association, business, labor union, etc.). You may review DOT's complete Privacy Act Statement in the **Federal Register** published on April 11, 2000 (Volume 65, Number 70; Pages 19477–78) or you may visit *http://dms.dot.gov.*

Dated: April 16, 2007.

By order of the Maritime Administrator.

Daron T. Threet,

Secretary, Maritime Administration.

[FR Doc. E7–7691 Filed 4–20–07; 8:45 am]

BILLING CODE 4910–81–P

DEPARTMENT OF TRANSPORTATION

Maritime Administration

[Docket No. MARAD–2007–27944]

Requested Administrative Waiver of the Coastwise Trade Laws

AGENCY: Maritime Administration, Department of Transportation.

ACTION: Invitation for public comments on a requested administrative waiver of the Coastwise Trade Laws for the vessel DEEP SIX.

SUMMARY: As authorized by Pub. L. 105–383 and Pub. L. 107–295, the Secretary of Transportation, as represented by the Maritime Administration (MARAD), is authorized to grant waivers of the U.S.-build requirement of the coastwise laws under certain circumstances. A request for such a waiver has been received by MARAD. The vessel, and a brief description of the proposed service, is listed below. The complete application is given in DOT docket MARAD–2007–27944 at *http://dms.dot.gov.* Interested parties may comment on the effect this action may have on U.S. vessel builders or businesses in the U.S. that use U.S.-flag vessels. If MARAD determines, in accordance with Pub. L. 105–383 and MARAD's regulations at 46 CFR part 388 (68 FR 23084; April 30, 2003), that the issuance of the waiver will have an unduly adverse effect on a U.S.-vessel builder or a business that uses U.S.-flag vessels in that business, a waiver will not be granted. Comments should refer to the docket number of this notice and the vessel name in order for MARAD to properly consider the comments. Comments should also state the commenter's interest in the waiver application, and address the waiver criteria given in § 388.4 of MARAD's regulations at 46 CFR Part 388.

DATES: Submit comments on or before May 23, 2007.

ADDRESSES: Comments should refer to docket number MARAD–2007–27944. Written comments may be submitted by hand or by mail to the Docket Clerk, U.S. DOT Dockets, Room PL–401, Department of Transportation, 400 7th St., SW., Washington, DC 20590–0001. You may also send comments electronically via the Internet at *http://dmses.dot.gov/submit/.* All comments will become part of this docket and will be available for inspection and copying at the above address between 10 a.m. and 5 p.m., E.T., Monday through Friday, except Federal holidays. An electronic version of this document and all documents entered into this docket is available on the World Wide Web at *http://dms.dot.gov.*

FOR FURTHER INFORMATION CONTACT: Joann Spittle, U.S. Department of Transportation, Maritime Administration, MAR–830 Room 7201, 400 Seventh Street, SW., Washington, DC 20590. Telephone 202–366–5979.

SUPPLEMENTARY INFORMATION: As described by the applicant the intended service of the vessel DEEP SIX is:

Intended Use: ''Passenger charter and recreational dive excursions.''

Geographic Region: Texas, Louisiana, Mississippi, Alabama, Florida, Georgia, South Carolina and their respective inland tributaries.

Privacy Act

Anyone is able to search the electronic form of all comments received into any of our dockets by the name of the individual submitting the comment (or signing the comment, if submitted on behalf of an association, business, labor union, etc.). You may review DOT's complete Privacy Act Statement in the **Federal Register** published on April 11, 2000 (Volume 65, Number 70; Pages 19477–78) or you may visit *http://dms.dot.gov.*

Dated: April 16, 2007.

By order of the Maritime Administrator.

Daron T. Threet,

Secretary, Maritime Administration.

[FR Doc. E7–7683 Filed 4–20–07; 8:45 am]

BILLING CODE 4910–81–P

DEPARTMENT OF TRANSPORTATION

Maritime Administration

[Docket No. MARAD–2007–27945]

Requested Administrative Waiver of the Coastwise Trade Laws

AGENCY: Maritime Administration, Department of Transportation.

ACTION: Invitation for public comments on a requested administrative waiver of the Coastwise Trade Laws for the vessel FINE LINE.

SUMMARY: As authorized by Pub. L. 105–383 and Pub. L. 107–295, the Secretary of Transportation, as represented by the Maritime Administration (MARAD), is authorized to grant waivers of the U.S.-build requirement of the coastwise laws under certain circumstances. A request for such a waiver has been received by MARAD. The vessel, and a brief description of the proposed service, is listed below. The complete application is given in DOT docket MARAD–2007–27945 at *http://dms.dot.gov.* Interested parties may comment on the effect this action may have on U.S. vessel builders or businesses in the U.S. that use U.S.-flag vessels. If MARAD determines, in accordance with Pub. L. 105–383 and MARAD's regulations at 46 CFR part 388 (68 FR 23084; April 30, 2003), that the issuance of the waiver will have an unduly adverse effect on a U.S.-vessel builder or a business that uses U.S.-flag vessels in that business, a waiver will not be granted. Comments should refer to the docket number of this notice and the vessel name in order for MARAD to properly consider the comments. Comments should also state the

commenter's interest in the waiver application, and address the waiver criteria given in § 388.4 of MARAD's regulations at 46 CFR part 388.

DATES: Submit comments on or before May 23, 2007.

ADDRESSES: Comments should refer to docket number MARAD–2007–27945. Written comments may be submitted by hand or by mail to the Docket Clerk, U.S. DOT Dockets, Room PL–401, Department of Transportation, 400 7th St., SW., Washington, DC 20590–0001. You may also send comments electronically via the Internet at *http://dmses.dot.gov/submit/*. All comments will become part of this docket and will be available for inspection and copying at the above address between 10 a.m. and 5 p.m., E.T., Monday through Friday, except federal holidays. An electronic version of this document and all documents entered into this docket is available on the World Wide Web at *http://dms.dot.gov*.

FOR FURTHER INFORMATION CONTACT: Joann Spittle, U.S. Department of Transportation, Maritime Administration, MAR–830 Room 7201, 400 Seventh Street, SW., Washington, DC 20590. Telephone 202–366–5979.

SUPPLEMENTARY INFORMATION: As described by the applicant the intended service of the vessel FINE LINE is:

Intended Use: ''Excursion charter fishing.''

Geographic Region: Texas, Louisiana, Mississippi, Alabama, Florida, Georgia, South Carolina, North Carolina, Virginia, Washington DC, Maryland, Delaware, New Jersey, New York, Connecticut, Rhode Island, Massachusetts, New Hampshire, Maine and their respective inland tributaries.

Privacy Act

Anyone is able to search the electronic form of all comments received into any of our dockets by the name of the individual submitting the comment (or signing the comment, if submitted on behalf of an association, business, labor union, etc.). You may review DOT's complete Privacy Act Statement in the **Federal Register** published on April 11, 2000 (Volume 65, Number 70; Pages 19477–78) or you may visit *http://dms.dot.gov*.

Dated: April 16, 2007.

By order of the Maritime Administrator.

Daron T. Threet,

Secretary, Maritime Administration.

[FR Doc. E7–7681 Filed 4–20–07; 8:45 am]

BILLING CODE 4910–81–P

DEPARTMENT OF TRANSPORTATION

Maritime Administration

[Docket No. MARAD–2007–27947]

Requested Administrative Waiver of the Coastwise Trade Laws

AGENCY: Maritime Administration, Department of Transportation.

ACTION: Invitation for public comments on a requested administrative waiver of the Coastwise Trade Laws for the vessel JOSEPHINE.

SUMMARY: As authorized by Pub. L. 105–383 and Pub. L. 107–295, the Secretary of Transportation, as represented by the Maritime Administration (MARAD), is authorized to grant waivers of the U.S.-build requirement of the coastwise laws under certain circumstances. A request for such a waiver has been received by MARAD. The vessel, and a brief description of the proposed service, is listed below. The complete application is given in DOT docket MARAD–2007–27947 at *http://dms.dot.gov*. Interested parties may comment on the effect this action may have on U.S. vessel builders or businesses in the U.S. that use U.S.-flag vessels. If MARAD determines, in accordance with Pub. L. 105–383 and MARAD's regulations at 46 CFR Part 388 (68 FR 23084; April 30, 2003), that the issuance of the waiver will have an unduly adverse effect on a U.S.-vessel builder or a business that uses U.S.-flag vessels in that business, a waiver will not be granted. Comments should refer to the docket number of this notice and the vessel name in order for MARAD to properly consider the comments. Comments should also state the commenter's interest in the waiver application, and address the waiver criteria given in § 388.4 of MARAD's regulations at 46 CFR Part 388.

DATES: Submit comments on or before May 23, 2007.

ADDRESSES: Comments should refer to docket number MARAD–2007–27947. Written comments may be submitted by hand or by mail to the Docket Clerk, U.S. DOT Dockets, Room PL–401, Department of Transportation, 400 7th St., SW., Washington, DC 20590–0001. You may also send comments electronically via the Internet at *http://dmses.dot.gov/submit/*. All comments will become part of this docket and will be available for inspection and copying at the above address between 10 a.m. and 5 p.m., E.T., Monday through Friday, except federal holidays. An electronic version of this document and all documents entered into this docket is available on the World Wide Web at *http://dms.dot.gov*.

FOR FURTHER INFORMATION CONTACT: Joann Spittle, U.S. Department of Transportation, Maritime Administration, MAR–830 Room 7201, 400 Seventh Street, SW., Washington, DC 20590. Telephone 202–366–5979.

SUPPLEMENTARY INFORMATION: As described by the applicant the intended service of the vessel JOSEPHINE is:

Intended Use: ''Passenger charter.''

Geographic Region: Washington, Oregon, and California.

Privacy Act

Anyone is able to search the electronic form of all comments received into any of our dockets by the name of the individual submitting the comment (or signing the comment, if submitted on behalf of an association, business, labor union, etc.). You may review DOT's complete Privacy Act Statement in the **Federal Register** published on April 11, 2000 (Volume 65, Number 70; Pages 19477–78) or you may visit *http://dms.dot.gov*.

Dated: April 16, 2007.

By order of the Maritime Administrator.

Daron T. Threet,

Secretary, Maritime Administration.

[FR Doc. E7–7680 Filed 4–20–07; 8:45 am]

BILLING CODE 4910–81–P

DEPARTMENT OF TRANSPORTATION

Maritime Administration

[Docket No. MARAD–2007–27946]

Requested Administrative Waiver of the Coastwise Trade Laws

AGENCY: Maritime Administration, Department of Transportation.

ACTION: Invitation for public comments on a requested administrative waiver of the Coastwise Trade Laws for the vessel LADY ANGELINA.

SUMMARY: As authorized by Public Law 105–383 and Public Law 107–295, the Secretary of Transportation, as represented by the Maritime Administration (MARAD), is authorized to grant waivers of the U.S.-build requirement of the coastwise laws under certain circumstances. A request for such a waiver has been received by MARAD. The vessel, and a brief description of the proposed service, is listed below. The complete application is given in DOT docket MARAD–2007–27946 at *http://dms.dot.gov*. Interested parties may comment on the effect this action may have on U.S. vessel builders or businesses in the U.S. that use U.S.-flag vessels. If MARAD determines, in accordance with Public Law 105–383

and MARAD's regulations at 46 CFR part 388 (68 FR 23084; April 30, 2003), that the issuance of the waiver will have an unduly adverse effect on a U.S.-vessel builder or a business that uses U.S.-flag vessels in that business, a waiver will not be granted. Comments should refer to the docket number of this notice and the vessel name in order for MARAD to properly consider the comments. Comments should also state the commenter's interest in the waiver application, and address the waiver criteria given in § 388.4 of MARAD's regulations at 46 CFR part 388.

DATES: Submit comments on or before May 23, 2007.

ADDRESSES: Comments should refer to docket number MARAD–2007–27946. Written comments may be submitted by hand or by mail to the Docket Clerk, U.S. DOT Dockets, Room PL–401, Department of Transportation, 400 7th St., SW., Washington, DC 20590–0001. You may also send comments electronically via the Internet at *http://dmses.dot.gov/submit/.* All comments will become part of this docket and will be available for inspection and copying at the above address between 10 a.m. and 5 p.m., E.T., Monday through Friday, except Federal holidays. An electronic version of this document and all documents entered into this docket is available on the World Wide Web at *http://dms.dot.gov.*

FOR FURTHER INFORMATION CONTACT: Joann Spittle, U.S. Department of Transportation, Maritime Administration, MAR–830 Room 7201, 400 Seventh Street, SW., Washington, DC 20590. Telephone 202–366–5979.

SUPPLEMENTARY INFORMATION: As described by the applicant the intended service of the vessel LADY ANGELINA is:

Intended Use: ''6 pack charter''.

Geographic Region: California.

Privacy Act

Anyone is able to search the electronic form of all comments received into any of our dockets by the name of the individual submitting the comment (or signing the comment, if submitted on behalf of an association, business, labor union, etc.). You may review DOT's complete Privacy Act Statement in the **Federal Register** published on April 11, 2000 (Volume 65, Number 70; Pages 19477–78) or you may visit *http://dms.dot.gov.*

Dated: April 16, 2007.

By order of the Maritime Administrator.

Daron T. Threet,

Secretary, Maritime Administration.

[FR Doc. E7–7692 Filed 4–20–07; 8:45 am]

BILLING CODE 4910–81–P

DEPARTMENT OF TRANSPORTATION

Maritime Administration

[Docket No. MARAD–2007–27940]

Requested Administrative Waiver of the Coastwise Trade Laws

AGENCY: Maritime Administration, Department of Transportation.

ACTION: Invitation for public comments on a requested administrative waiver of the Coastwise Trade Laws for the vessel MY REALITY.

SUMMARY: As authorized by Public Law 105–383 and Public Law 107–295, the Secretary of Transportation, as represented by the Maritime Administration (MARAD), is authorized to grant waivers of the U.S.-build requirement of the coastwise laws under certain circumstances. A request for such a waiver has been received by MARAD. The vessel, and a brief description of the proposed service, is listed below. The complete application is given in DOT docket MARAD–2007–27940 at *http://dms.dot.gov.* Interested parties may comment on the effect this action may have on U.S. vessel builders or businesses in the U.S. that use U.S.-flag vessels. If MARAD determines, in accordance with Pub. L. 105–383 and MARAD's regulations at 46 CFR part 388 (68 FR 23084; April 30, 2003), that the issuance of the waiver will have an unduly adverse effect on a U.S.-vessel builder or a business that uses U.S.-flag vessels in that business, a waiver will not be granted. Comments should refer to the docket number of this notice and the vessel name in order for MARAD to properly consider the comments. Comments should also state the commenter's interest in the waiver application, and address the waiver criteria given in § 388.4 of MARAD's regulations at 46 CFR part 388.

DATES: Submit comments on or before May 23, 2007.

ADDRESSES: Comments should refer to docket number MARAD–2007–27940. Written comments may be submitted by hand or by mail to the Docket Clerk, U.S. DOT Dockets, Room PL–401, Department of Transportation, 400 7th St., SW., Washington, DC 20590–0001. You may also send comments electronically via the Internet at *http://dmses.dot.gov/submit/.* All comments will become part of this docket and will be available for inspection and copying at the above address between 10 a.m. and 5 p.m., E.T., Monday through Friday, except Federal holidays. An electronic version of this document and all documents entered into this docket is available on the World Wide Web at *http://dms.dot.gov.*

FOR FURTHER INFORMATION CONTACT: Joann Spittle, U.S. Department of Transportation, Maritime Administration, MAR–830 Room 7201, 400 Seventh Street, SW., Washington, DC 20590. Telephone 202–366–5979.

SUPPLEMENTARY INFORMATION: As described by the applicant the intended service of the vessel MY REALITY is:

Intended Use: ''Sunset cruises, sight seeing and eco trips, some over night charters.''

Geographic Region: Florida, Georgia, North and South Carolina, Virginia, Delaware, Maryland, New Jersey, New York.

Privacy Act

Anyone is able to search the electronic form of all comments received into any of our dockets by the name of the individual submitting the comment (or signing the comment, if submitted on behalf of an association, business, labor union, etc.). You may review DOT's complete Privacy Act Statement in the **Federal Register** published on April 11, 2000 (Volume 65, Number 70; Pages 19477–78) or you may visit *http://dms.dot.gov.*

Dated: April 16, 2007.

By order of the Maritime Administrator.

Daron T. Threet,

Secretary, Maritime Administration.

[FR Doc. E7–7695 Filed 4–20–07; 8:45 am]

BILLING CODE 4910–81–P

DEPARTMENT OF TRANSPORTATION

Maritime Administration

[Docket No. MARAD–2007–27939]

Requested Administrative Waiver of the Coastwise Trade Laws

AGENCY: Maritime Administration, Department of Transportation.

ACTION: Invitation for public comments on a requested administrative waiver of the Coastwise Trade Laws for the vessel PHOENIX.

SUMMARY: As authorized by Pub. L. 105–383 and Pub. L. 107–295, the Secretary of Transportation, as represented by the Maritime Administration (MARAD), is authorized to grant waivers of the U.S.-build requirement of the coastwise laws

under certain circumstances. A request for such a waiver has been received by MARAD. The vessel, and a brief description of the proposed service, is listed below. The complete application is given in DOT docket MARAD–2007–27939 at *http://dms.dot.gov*. Interested parties may comment on the effect this action may have on U.S. vessel builders or businesses in the U.S. that use U.S.-flag vessels. If MARAD determines, in accordance with Pub. L. 105–383 and MARAD's regulations at 46 CFR part 388 (68 FR 23084; April 30, 2003), that the issuance of the waiver will have an unduly adverse effect on a U.S.-vessel builder or a business that uses U.S.-flag vessels in that business, a waiver will not be granted. Comments should refer to the docket number of this notice and the vessel name in order for MARAD to properly consider the comments. Comments should also state the commenter's interest in the waiver application, and address the waiver criteria given in § 388.4 of MARAD's regulations at 46 CFR Part 388.

DATES: Submit comments on or before May 23, 2007.

ADDRESSES: Comments should refer to docket number MARAD–2007–27939. Written comments may be submitted by hand or by mail to the Docket Clerk, U.S. DOT Dockets, Room PL–401, Department of Transportation, 400 7th St., SW., Washington, DC 20590–0001. You may also send comments electronically via the Internet at *http://dmses.dot.gov/submit/*. All comments will become part of this docket and will be available for inspection and copying at the above address between 10 a.m. and 5 p.m., E.T., Monday through Friday, except Federal holidays. An electronic version of this document and all documents entered into this docket is available on the World Wide Web at *http://dms.dot.gov.*

FOR FURTHER INFORMATION CONTACT: Joann Spittle, U.S. Department of Transportation, Maritime Administration, MAR–830 Room 7201, 400 Seventh Street, SW., Washington, DC 20590. Telephone 202–366–5979.

SUPPLEMENTARY INFORMATION: As described by the applicant the intended service of the vessel PHOENIX is:

Intended Use: ''The primary intended use of the vessel is for marine research. The vessel may also be used for incidental commercial passenger operations.''

Geographic Region: The West Coast region, including the states of Alaska (excluding Southeast Alaska), Washington, Oregon, and California.

Privacy Act

Anyone is able to search the electronic form of all comments received into any of our dockets by the name of the individual submitting the comment (or signing the comment, if submitted on behalf of an association, business, labor union, etc.). You may review DOT's complete Privacy Act Statement in the **Federal Register** published on April 11, 2000 (Volume 65, Number 70; Pages 19477–78) or you may visit *http://dms.dot.gov.*

Dated: April 16, 2007.

By order of the Maritime Administrator.

Daron T. Threet,

Secretary, Maritime Administration.

[FR Doc. E7–7672 Filed 4–20–07; 8:45 am]

BILLING CODE 4910–81–P

DEPARTMENT OF TRANSPORTATION

Maritime Administration

[Docket No. MARAD–2007–27942]

Requested Administrative Waiver of the Coastwise Trade Laws

AGENCY: Maritime Administration, Department of Transportation.

ACTION: Invitation for public comments on a requested administrative waiver of the Coastwise Trade Laws for the vessel TINKER TOY.

SUMMARY: As authorized by Pub. L. 105–383 and Pub. L. 107–295, the Secretary of Transportation, as represented by the Maritime Administration (MARAD), is authorized to grant waivers of the U.S.-build requirement of the coastwise laws under certain circumstances. A request for such a waiver has been received by MARAD. The vessel, and a brief description of the proposed service, is listed below. The complete application is given in DOT docket MARAD–2007–27942 at *http://dms.dot.gov*. Interested parties may comment on the effect this action may have on U.S. vessel builders or businesses in the U.S. that use U.S.-flag vessels. If MARAD determines, in accordance with Pub. L. 105–383 and MARAD's regulations at 46 CFR Part 388 (68 FR 23084; April 30, 2003), that the issuance of the waiver will have an unduly adverse effect on a U.S.-vessel builder or a business that uses U.S.-flag vessels in that business, a waiver will not be granted. Comments should refer to the docket number of this notice and the vessel name in order for MARAD to properly consider the comments. Comments should also state the commenter's interest in the waiver application, and address the waiver criteria given in § 388.4 of MARAD's regulations at 46 CFR Part 388.

DATES: Submit comments on or before May 23, 2007.

ADDRESSES: Comments should refer to docket number MARAD–2007–27942. Written comments may be submitted by hand or by mail to the Docket Clerk, U.S. DOT Dockets, Room PL–401, Department of Transportation, 400 7th St., SW., Washington, DC 20590–0001. You may also send comments electronically via the Internet at *http://dmses.dot.gov/submit/*. All comments will become part of this docket and will be available for inspection and copying at the above address between 10 a.m. and 5 p.m., E.T., Monday through Friday, except federal holidays. An electronic version of this document and all documents entered into this docket is available on the World Wide Web at *http://dms.dot.gov.*

FOR FURTHER INFORMATION CONTACT: Joann Spittle, U.S. Department of Transportation, Maritime Administration, MAR–830 Room 7201, 400 Seventh Street, SW., Washington, DC 20590. Telephone 202–366–5979.

SUPPLEMENTARY INFORMATION: As described by the applicant the intended service of the vessel TINKER TOY is:

Intended Use: ''Used for recreational purposes and housing up to 4 guests at private fishing camp during summer months only.''

Geographic Region: Near coastal waters of Pacific Ocean of U.S. including California, Oregon, Washington and Alaska; Straight of Juan de Fuca; passage through Canada via inside passage. Seasonal fishing camp is approximately 90 miles SW of Ketchikan, AK, at Dall Is.

Privacy Act

Anyone is able to search the electronic form of all comments received into any of our dockets by the name of the individual submitting the comment (or signing the comment, if submitted on behalf of an association, business, labor union, etc.). You may review DOT's complete Privacy Act Statement in the **Federal Register** published on April 11, 2000 (Volume 65, Number 70; Pages 19477–78) or you may visit *http://dms.dot.gov.*

Dated: April 16, 2007.

By order of the Maritime Administrator.

Daron T. Threet,

Secretary, Maritime Administration.

[FR Doc. E7–7677 Filed 4–20–07; 8:45 am]

BILLING CODE 4910–81–P

DEPARTMENT OF TRANSPORTATION

Pipeline and Hazardous Materials Safety Administration

[Docket No. PHMSA–2007–27954]

Pipeline Safety: Workshop on ''Prevention Through People'' Initiative

AGENCY: Pipeline and Hazardous Materials Safety Administration (PHMSA), U.S. Department of Transportation (DOT).

ACTION: Notice of public workshop.

SUMMARY: This notice announces the first public workshop on PHMSA's ''Prevention Through People'' (PTP) initiative. This workshop will gather information about noteworthy pipeline safety and integrity practices in control room operations, including measures for managing human risk factors such as fatigue. The information gathered will be used to develop an approach to control room management that enhances safety.

DATES: The workshop will be held on Wednesday, May 23, 2007 from 8:30 a.m. to 5 p.m. EST.

ADDRESSES: The workshop will take place at the National Transportation Safety Board (NTSB) Conference Center, 429 L'Enfant Plaza, SW., Washington, DC 20594.

FOR FURTHER INFORMATION CONTACT: For additional information regarding this workshop contact Byron Coy at (609) 989–2180, or by e-mail at *byron.coy@dot.gov*.

SUPPLEMENTARY INFORMATION:

I. Workshop Details

Members of the public may attend the workshop. PHMSA will post any additional information or changes on its Web page (*http://www.phmsa.dot.gov*) approximately 15 days before the workshop date.

Comments should reference Docket No. PHMSA–2007–27954 and may be submitted in the following ways:

- DOT Web site: *http://dms.dot.gov*. To submit comments on the DOT electronic docket site, click ''Comment/Submissions,'' click ''Continue,'' fill in the requested information, click ''Continue,'' enter your comment, then click ''Submit.''
- Fax: 1–202–493–2251.
- Mail: Docket Management System: U.S. Department of Transportation, 400 Seventh Street, SW., Nassif Building, Room PL–401, Washington, DC 20590–0001.
- Hand Delivery: DOT Docket Management System; Room PL–401 on the plaza level of the Nassif Building, 400 Seventh Street, SW., Washington, DC between 9 a.m. and 5 p.m., Monday through Friday, except Federal holidays.
- E-Gov Web site: *http://www.regulations.gov*. This site allows the public to enter comments on any **Federal Register** notice issued by any agency.

Instructions: You should identify the docket number, PHMSA–2007–27954, at the beginning of your comments. If you submit your comments by mail, you should submit two copies. If you wish to receive confirmation that PHMSA received your comments, you should include a self-addressed stamped postcard. Internet users may submit comments at *http://www.regulations.gov*, and may access all comments received by DOT at *http://dms.dot.gov* by performing a simple search for the docket number.

Note: All comments will be posted without changes or edits to *http://dms.dot.gov* including any personal information provided.

Privacy Act Statement: Anyone may search the electronic form of all comments received for any of our dockets. You may review DOT's complete Privacy Act Statement in the **Federal Register** published on April 11, 2000 (65 FR 19477) or you may visit *http://dms.dot.gov*.

Information on Services for Individuals with Disabilities: For information on facilities or services for individuals with disabilities, or to request special assistance at the workshop, please contact Byron Coy at (609) 989–2180 by May 18, 2007.

II. Background

Sections 12 and 19 of the Pipeline Integrity, Protection, Enforcement and Safety Act of 2006 (PIPES Act), Public Law 109–468, direct PHMSA to address various risks to pipeline integrity in which people play a large role, including fatigue and other safety concerns in control room management. PHMSA plans to use its PTP initiative to address these PIPES Act requirements.

Historically, PHMSA's pipeline integrity management (IM) efforts were driven by making best use of risk data to prioritize risk control efforts. Program logic dictated the focus on the physical and structural soundness of the pipe and other infrastructure components to assure that hazardous liquids and natural gas are safely transported. IM programs over the past several years are successfully driving down the leading risks of third party damage and corrosion. These programs help operators understand the threats affecting the integrity of their systems and implement appropriate actions to mitigate risks associated with these threats. Third party damage and corrosion are only part of the safety picture. The next logical area of program development is to examine the role of people, including control center operators. Human error, including those caused by mistake or fatigue, can cause or exacerbate events involving releases leading to safety impacts.

PHMSA is considering a plan to recognize the importance of human interactions and opportunities for preventing risk, both errors and mitigating actions, to pipeline system integrity by instituting a PTP program. This effort would draw together all existing program components both regulatory and non-regulatory. The PTP program would be designed as a holistic part of the IM program efforts.

Several existing regulations focus on the role of people in effectively managing safety. These include regulations on damage prevention programs (§§ 192.614 and 195.442), public awareness (§§ 192.616 and 195.440), and qualification of pipeline personnel (§ 192.801 and subpart G of part 195). In the future, PHMSA plans to address additional risks associated with human factors as well as the opportunities for people to mitigate risks. Explicitly incorporating a PTP element in IM plans would emphasize the role of people both in contributing to and in reducing risk. PHMSA believes that this may be the best means of fostering a holistic approach to managing the safety impact of people on the integrity of pipelines. In addition to regulations, PHMSA plans to recognize and communicate noteworthy best practices in PTP.

PHMSA recently reported to Congress on its work examining control room management issues. This report, titled ''Qualification of Pipeline Personnel,'' is the culmination of a four-year effort examining control room issues in PTP. Controllers are individuals who operate computer-based systems for monitoring and controlling the operations of pipelines. Although the project began with examination of qualification issues, during the course of the project, we identified other control room issues impacting the safety performance of these individuals. PHMSA concluded that validating the adequacy of controller-related processes, procedures, training and the controllers' credentials would improve management of control rooms, enhancing safety for the public, environment and pipeline employees. PHMSA also identified areas in which additional measures could enhance

control room safety and minimize risk associated with fatigue and interaction with computer equipment. These areas include annual validation of controller qualifications by senior level executives of pipeline companies, clearly defined responsibilities for controllers in responding to abnormal operating conditions, the use of formalized procedures for information exchange during shift turnover, and clearly established shift lengths combined with education on strategies to reduce the contribution of non-work activities to fatigue.

This workshop will build on work done in the June 2006 workshop on controller issues. PHMSA will include panels drawn from the entire enterprise to discuss noteworthy practices in the various areas. We anticipate panels on fatigue and other control room management issues. These issues include both those directly relating to the individuals, such as qualifications and fatigue, as well as the systems and processes controllers use that can affect pipeline safety and integrity.

In particular, PHMSA seeks information about best practices and standards that would accomplish the following:

1. Clearly define the roles and responsibilities of controllers to ensure their prompt and appropriate response to abnormal operating conditions.
2. Formalize procedures for recording critical information and for exchanging information during shift turn-over.
3. Establish shift lengths and schedule rotations to protect against the onset of fatigue, and educate controllers and their supervisors in fatigue mitigation strategies and how non-work activities contribute to fatigue.
4. Periodically review the supervisory control and data acquisition systems (SCADA) displays to insure controllers are getting clear and reliable information from field stations and devices.
5. Periodically audit alarm configurations and handling procedures to provide confidence in alarm signals and to ensure controller effectiveness.
6. Involve controllers when planning and implementing changes in operations, and maintain strong communications between controllers and field personnel.
7. Determine how to establish, maintain, and review controller qualifications, abilities and performance metrics, with particular attention to response to abnormal operating conditions.
8. Analyze operating experience including accidents and incidents for possible involvement of the SCADA system, controller performance, and fatigue.
9. Validate the adequacy of controller-related procedures, training and the qualifications of controllers, possibly annually through involvement by senior level executives of pipeline companies.

PHMSA also expressly seeks comments on the potential for including PTP within IM.

III. Preliminary Workshop Agenda

The preliminary agenda for this workshop includes briefings on the following topics:

- Prevention through People' Overview.
- Purpose and Goals of Workshop.
- Fatigue and SCADA–NTSB.
- Fatigue-Panel Discussion.
- Computer Interface and Change Management—Panel Discussion.
- Control Room Practices—Panel Discussion.
- Risk Approach to Control Room Management—PHMSA.

Authority: 49 U.S.C. 60102, 60117.

Issued in Washington, DC on April 17, 2007.

Joy Kadnar,

Director, Office of Engineering and Emergency Support.

[FR Doc. 07–1987 Filed 4–18–07; 10:40 am]

BILLING CODE 4910–60–P

DEPARTMENT OF TRANSPORTATION

Pipeline and Hazardous Materials Safety Administration

[Docket No. PHMSA–04–19856]

Pipeline Safety: Senior Executive Signature and Certification of Integrity Management Program Performance Reports

AGENCY: Pipeline and Hazardous Materials Safety Administration (PHMSA), DOT.

ACTION: Notice; Issuance of advisory bulletin.

SUMMARY: On December 29, 2006, the Pipeline Inspection, Protection, Enforcement and Safety Act was signed into law. The law, known as the PIPES Act, includes a provision requiring the senior executive officers of pipeline operating companies to certify annual and semiannual pipeline integrity management program performance reports. This advisory provides information to assist pipeline operators with certifying future submissions of annual and semiannual pipeline integrity management program performance reports.

FOR FURTHER INFORMATION CONTACT: Zach Barrett at (405) 954–5559 or by e-mail at *zach.barrett@dot.gov;* or Wayne Lemoi at (404) 832–1160, or by e-mail at *wayne.lemoi@dot.gov.*

SUPPLEMENTARY INFORMATION:

I. Background

Section 16 of the PIPES Act requires PHMSA to establish procedures for a pipeline operator's senior executive officer to certify annual and semiannual pipeline integrity management program performance reports with their signature. Specifically, the law requires each report to include a signed statement certifying that the senior executive officer has reviewed the report and to the best of the senior executive officer's knowledge and belief, this report is true and complete. PHMSA is modifying its electronic filing to assist pipeline operators with complying with section 16 of the PIPES Act electronically. In addition, this advisory informs operators not filing electronically how to comply with section 16.

II. Advisory Bulletin ADB–07–01

To: Operators of Natural Gas and Hazardous Liquid Pipelines.

Subject: Senior Executive Officer Signature and Certification of Integrity Management Program Performance Reports.

Purpose: To inform operators of natural gas and hazardous liquid pipelines on how to meet the requirement for a senior executive officer's signature and certification on pipeline integrity management program (IMP) performance reports.

Advisory: Section 16 of the PIPES Act requires pipeline operators to have a senior executive officer of the company sign and certify annual and semiannual IMP performance reports. By signing, the senior executive officer is certifying that the senior executive officer has reviewed the report and to the best of the senior executive officer's knowledge and belief, this report is true and complete. To assist pipeline operators with complying with the section 16 requirement, we are providing the following procedures for those operators of natural gas pipelines and hazardous liquid pipelines required to file IMP reports. Pipeline operators should follow these procedures for future submissions of annual and semiannual IMP performance reports.

Gas Integrity Management Program Performance Measures Reports

Operators of gas transmission pipelines are required by 49 CFR

192.945 to submit IMP performance measures semiannually to PHMSA. Operators are encouraged to submit the IMP reports using the electronic form available on PHMSA's Web site at *http://phmsa.dot.gov.*

To minimize future transcription and handling and to lessen the chance for errors, PHMSA is modifying the gas IMP electronic form to reflect the new legal requirement for a senior executive officer's certification and signature. Operators should enter the name and title of the senior executive officer certifying the report in the appropriate blanks on the form and in the signature block on the form. Operators should keep in mind that entering the senior executive officer's name onto the electronic form is equivalent to a paper submission and has the same legal authenticity and requirements as a paper document.

In lieu of electronic filing, operators can mail or fax the reports to PHMSA. If submitting by mail or fax, the name and title of the senior executive officer certifying the report should be entered in the appropriate blanks on the form. The senior executive officer should certify the report by signing this form in the signature block.

Hazardous Liquid Integrity Management Program Annual Reports

PHMSA requires hazardous liquid pipeline operators to submit annual reports providing information about their pipeline infrastructure and their integrity management program. Operators are required to submit these reports annually and by June 15 for the previous calendar year in accordance with 49 CFR 195.49.

Operators of hazardous liquid pipelines are encouraged to use the Online Data Entry System (ODES) available at the PHMSA Web site located at *http://phmsa.dot.gov* to submit annual reports. To minimize future transcription and handling and to lessen the chance for errors, we are modifying the ODES electronic form to reflect the new legal requirement for a senior executive officer certification and signature. Operators should enter the name and title of the senior executive officer certifying the report in the appropriate blanks on the form and in the signature block on the form. Operators should keep in mind that entering the senior executive officer's name onto the electronic form is equivalent to a paper submission and has the same legal authenticity and requirements as a paper document.

Operators may also submit the annual report to PHMSA by mail or fax in accordance with 49 CFR 195.58. If submitting by mail or fax, the name and title of the senior executive officer certifying the report should be entered in the appropriate blanks on the form. The senior executive officer should certify the report by signing the form in the signature block.

Authority: 49 U.S.C. chapter 601 and 49 CFR 1.53.

Issued in Washington, DC on April 13, 2007.

Jeffrey D. Wiese,

Acting Associate Administrator for Pipeline Safety.

[FR Doc. E7–7602 Filed 4–20–07; 8:45 am]

BILLING CODE 4910–60–P

DEPARTMENT OF THE TREASURY

Departmental Offices; Renewal of the Treasury Borrowing Advisory Committee of the Bond Market Association and Name Change to the Treasury Borrowing Advisory Committee of the Securities Industry and Financial Markets Association

ACTION: Notice of renewal and name change.

SUMMARY: In accordance with the Federal Advisory Committee Act, as amended (Pub. L. 92–463; 5 U.S.C. App. 2), with the concurrence of the General Services Administration, the Secretary of the Treasury has determined that renewal of the Treasury Borrowing Advisory Committee of The Bond Market Association (the ''Committee'') is necessary and in the public interest in connection with the performance of duties imposed on the Department of the Treasury by law.

Effective November 1, 2006, the name of the Bond Market Association was changed to the Securities Industry and Financial Markets Association following the merger of the Securities Industry Association and the Bond Market Association. Hence, the name of the Committee has been changed to reflect this merger. The new name is the Treasury Borrowing Advisory Committee of the Securities Industry and Financial Markets Association.

FOR FURTHER INFORMATION CONTACT: Karthik Ramanathan, Director, Office of Debt Management (202) 622–2042.

SUPPLEMENTARY INFORMATION: The purpose of the Committee is to provide informed advice as representatives of the financial community to the Secretary of the Treasury and Treasury staff, upon the Secretary of the Treasury's request, in carrying out Treasury responsibilities for federal financing and public debt management.

The Committee meets to consider special items on which its advice is sought pertaining to immediate Treasury funding requirements and pertaining to longer term approaches to manage the national debt in a cost-effective manner. The Committee usually meets immediately before the Treasury announces each mid-calendar quarter funding operation, although special meetings also may be held.

Membership consists of 10–15 individuals who are experts in the government securities market and who are involved in senior positions in debt markets as institutional investors, investment advisors, or as dealers in government securities.

The Designated Federal Official for the Advisory Committee is the Director of the Office of Debt Management. The Treasury Department is filing copies of the Committee's renewal charter with appropriate committees in Congress.

Dated: April 17, 2007.

Anthony W. Ryan,

Assistant Secretary, Financial Markets.

[FR Doc. 07–1981 Filed 4–20–07; 8:45 am]

BILLING CODE 4811–42–M

DEPARTMENT OF THE TREASURY

Alcohol and Tobacco Tax and Trade Bureau

Proposed Information Collection; Comment Request

AGENCY: Alcohol and Tobacco Tax and Trade Bureau (TTB), Treasury.

ACTION: Notice and request for comments.

SUMMARY: As part of our continuing effort to reduce paperwork and respondent burden, and as required by the Paperwork Reduction Act of 1995, we invite comments on the proposed or continuing information collections listed below in this notice.

DATES: We must receive your written comments on or before June 22, 2007.

ADDRESSES: You may send comments to Mary A. Wood, Alcohol and Tobacco Tax and Trade Bureau, at any of these addresses:

- P.O. Box 14412, Washington, DC 20044–4412;
- 202–927–8525 (facsimile); or
- *formcomments@ttb.gov* (e-mail).

Please send separate comments for each specific information collection listed below. You must reference the information collection's title, form or recordkeeping requirement number, and OMB number (if any) in your comment. If you submit your comment via facsimile, send no more than five 8.5 x

11 inch pages in order to ensure electronic access to our equipment.

FOR FURTHER INFORMATION CONTACT: To obtain additional information, copies of the information collection and its instructions, or copies of any comments received, contact Mary A. Wood, Alcohol and Tobacco Tax and Trade Bureau, P.O. Box 14412, Washington, DC 20044–4412; or telephone 202–927–8210.

SUPPLEMENTARY INFORMATION:

Request for Comments

The Department of the Treasury and its Alcohol and Tobacco Tax and Trade Bureau, as part of their continuing effort to reduce paperwork and respondent burden, invite the general public and other Federal agencies to comment on the proposed or continuing information collections listed below in this notice, as required by the Paperwork Reduction Act of 1995 (44 U.S.C. 3501 *et seq.*).

Comments submitted in response to this notice will be included or summarized in our request for Office of Management and Budget (OMB) approval of the relevant information collection. All comments are part of the public record and subject to disclosure. Please not do include any confidential or inappropriate material in your comments.

We invite comments on: (a) Whether this information collection is necessary for the proper performance of the agency's functions, including whether the information has practical utility; (b) the accuracy of the agency's estimate of the information collection's burden; (c) ways to enhance the quality, utility, and clarity of the information collected; (d) ways to minimize the information collection's burden on respondents, including through the use of automated collection techniques or other forms of information technology; and (e) estimates of capital or start-up costs and costs of operation, maintenance, and purchase of services to provide the requested information.

Information Collections Open for Comment

Currently, we are seeking comments on the following records and questionnaires:

Title: Brewer's Report of Operations and Brewpub Report of Operations.

OMB Number: 1513–0007.

TTB Form Numbers: 5130.9 and 5130.26.

Abstract: Brewers periodically file these reports of their operations to account for activity relating to taxable commodities. TTB uses this information primarily for revenue protection, for audit purposes, and to determine whether activities are in compliance with the requirements of law. We also use this information to publish periodic statistical releases of use and interest to the industry.

Current Actions: We are making changes to both forms. On both forms, we are revising Part 1 to improve the explanation for each line. Also, we are revising the instructions to make them clearer and easier to understand. The burden hours have decreased as a result of a decrease in the number of respondents.

Type of Review: Revision of a currently approved collection.

Affected Public: Business or other for-profit.

Estimated Number of Respondents: 1,640.

Estimated Total Annual Burden Hours: 7,310.

Title: Brewer's Bonds and Continuation Certificates.

OMB Number: 1513–0015.

TTB Form Numbers: 5130.22, 5130.23, 5130.25, and 5130.27.

Abstract: The Internal Revenue Code requires brewers to give a bond to protect the revenue and to ensure compliance with the requirements of the law and the regulations. Bonds and continuation certificates are required by law and are necessary to protect government interests in the excise tax revenues that brewers pay.

Current Actions: We are making changes to all of these forms. For all forms we are revising the Penalty and Perjury Statement, the Instructions, the Terms, and the Conditions to make them clearer and more understandable, and we are deleting the Employer Identification Number (EIN) and date from page 2. No additional changes will be made to TTB F 5130.22. However, on TTB F 5130.23, we are deleting the date from page 1, adding a space for ''State of Incorporation,'' deleting ''office'' from ''mailing office address,'' and adding the heading ''Enter Applicable Bonds and Continuation Certificate Below'' above the columns for Form #, Effective Date, and Bond Amount. On TTB F 5130.25, we are deleting the date from page 1. On TTB F 5130.27, we are deleting the date from page 1, adding a space for ''State of Incorporation or Organization,'' and adding the heading ''Enter Applicable Bonds and Continuation Certificate Below'' above the columns for Form #, Effective Date, and Bond Amount.

Type of Review: Revision of a currently approved collection.

Affected Public: Business or other for-profit.

Estimated Number of Respondents: 1,640.

Estimated Total Annual Burden Hours: 563.

Title: Signing Authority for Corporate Officials.

OMB Number: 1513–0036.

TTB Form Numbers: 5100.1.

Abstract: TTB F 5100.1 is substituted for corporate documents or minutes of a meeting of the Board of Directors in order to authorize an individual or office to sign for the corporation in TTB matters. The form identifies the corporation, the individual or office authorized to sign, and documents the authorization.

Current Actions: We are changing this form by adding a box for the EIN.

Type of Review: Revision of a currently approved collection.

Affected Public: Business or other for-profit.

Estimated Number of Respondents: 1,000.

Estimated Total Annual Burden Hours: 250.

Title: Monthly Report of Processing Operations.

OMB Number: 1513–0041.

TTB Form Number: 5110.28.

TTB Recordkeeping Requirement Number: 5110/03.

Abstract: The information collected is necessary to account for and verify the processing of distilled spirits in bond. It is used to audit plant operations, monitor industry activities for efficient allocation of personnel resources, and for the compilation of statistics.

Current Actions: We are changing this form by adding a box for the EIN.

Type of Review: Revision of a currently approved collection.

Affected Public: Business or other for-profit.

Estimated Number of Respondents: 479.

Estimated Total Annual Burden Hours: 5,748.

Title: Application for Registration for Tax-Free Transactions under 26 U.S.C. 4221.

OMB Number: 1513–0095.

TTB Form Number: 5300.28.

TTB Recordkeeping Requirement Number: 5300/28.

Abstract: Businesses and State and local governments apply for registration to sell or purchase firearms or ammunition tax-free on this form. TTB uses the form to determine an applicant's qualifications.

Current Actions: There are no changes to this information collection and it is being submitted for extension purposes only.

Type of Review: Extension of a currently approved collection.

Affected Public: Business or other for-profit; State, local, or Tribal government.

Estimated Number of Respondents: 125.

Estimated Total Annual Burden Hours: 375.

Dated: April 17, 2007.

Francis W. Foote,

Chief, Regulations and Procedures Division.

[FR Doc. E7–7697 Filed 4–20–07; 8:45 am]

BILLING CODE 4810–31–P

DEPARTMENT OF THE TREASURY

Office of the Comptroller of the Currency

[Docket ID OCC–2007–0009]

FEDERAL RESERVE SYSTEM

FEDERAL DEPOSIT INSURANCE CORPORATION

DEPARTMENT OF THE TREASURY

Office of Thrift Supervision

[No. 2007–14]

Joint Report: Differences in Accounting and Capital Standards Among the Federal Banking Agencies; Report to Congressional Committees

AGENCIES: Office of the Comptroller of the Currency (OCC), Treasury; Board of Governors of the Federal Reserve System (Board); Federal Deposit Insurance Corporation (FDIC); and Office of Thrift Supervision (OTS), Treasury.

ACTION: Report to the congressional committees.

SUMMARY: The OCC, the Board, the FDIC, and the OTS (the Agencies) have prepared this report pursuant to section 37(c) of the Federal Deposit Insurance Act. Section 37(c) requires the Agencies to jointly submit an annual report to the Committee on Financial Services of the United States House of Representatives and to the Committee on Banking, Housing, and Urban Affairs of the United States Senate describing differences between the capital and accounting standards used by the Agencies. The report must be published in the **Federal Register**.

FOR FURTHER INFORMATION CONTACT:

OCC: Nancy Hunt, Risk Expert (202–874–4923), Office of the Comptroller of the Currency, 250 E Street, SW., Washington, DC 20219.

Board: John F. Connolly, Senior Supervisory Financial Analyst (202–452–3621), Division of Banking Supervision and Regulation, Board of Governors of the Federal Reserve System, 20th Street and Constitution Avenue, NW., Washington, DC 20551.

FDIC: Robert F. Storch, Chief Accountant (202–898–8906), Division of Supervision and Consumer Protection, Federal Deposit Insurance Corporation, 550 17th Street, NW., Washington, DC 20429.

OTS: Christine A. Smith, Project Manager (202–906–5740), Supervision Policy, Office of Thrift Supervision, 1700 G Street, NW., Washington, DC 20552.

SUPPLEMENTARY INFORMATION: The text of the report follows:

Report to the Committee on Financial Services of the United States House of Representatives and to the Committee on Banking, Housing, and Urban Affairs of the United States Senate regarding differences in accounting and capital standards among the federal banking agencies.

Introduction

The Office of the Comptroller of the Currency (OCC), the Board of Governors of the Federal Reserve System (FRB), the Federal Deposit Insurance Corporation (FDIC), and the Office of Thrift Supervision (OTS) (''the federal banking agencies'' or ''the agencies'') must jointly submit an annual report to the Committee on Financial Services of the U.S. House of Representatives and the Committee on Banking, Housing, and Urban Affairs of the U.S. Senate describing differences between the accounting and capital standards used by the agencies. The report must be published in the **Federal Register**.

This report, which covers differences existing as of December 31, 2006, is the fifth joint annual report on differences in accounting and capital standards to be submitted pursuant to Section 37(c) of the Federal Deposit Insurance Act (12 U.S.C. 1831n(c)), as amended. Prior to the agencies' first joint annual report, Section 37(c) required a separate report from each agency.

Since the agencies filed their first reports on accounting and capital differences in 1990, the agencies have acted in concert to harmonize their accounting and capital standards and eliminate as many differences as possible. Section 303 of the Riegle Community Development and Regulatory Improvement Act of 1994 (12 U.S.C. 4803) also directed the agencies to work jointly to make uniform all regulations and guidelines implementing common statutory or supervisory policies. The results of these efforts must be ''consistent with the principles of safety and soundness, statutory law and policy, and the public interest.'' In recent years, the agencies have revised their capital standards to address changes in credit and certain other risk exposures within the banking system and to align the amount of capital institutions are required to hold more closely with the credit risks and certain other risks to which they are exposed. These revisions have been made in a uniform manner whenever possible and practicable to minimize interagency differences.

While the differences in capital standards have diminished over time, a few differences remain. Some of the remaining capital differences are statutorily mandated. Others were significant historically but now no longer affect in a measurable way, either individually or in the aggregate, institutions supervised by the federal banking agencies. In this regard, the OTS plans to eliminate two such *de minimis* differences during 2007 that have been fully discussed in previous joint annual reports ((i) covered assets and (ii) pledged deposits, nonwithdrawable accounts, and certain certificates), and these differences have been excluded from this annual report.

In addition to the specific differences in capital standards noted below, the agencies may have differences in how they apply certain aspects of their rules. These differences usually arise as a result of case-specific inquiries that have only been presented to one agency. Agency staffs seek to minimize these occurrences by coordinating responses to the fullest extent reasonably practicable.

The federal banking agencies have substantially similar capital adequacy standards. These standards employ a common regulatory framework that establishes minimum leverage and risk-based capital ratios for all banking organizations (banks, bank holding companies, and savings associations). The agencies view the leverage and risk-based capital requirements as minimum standards, and most institutions are expected to operate with capital levels well above the minimums, particularly those institutions that are expanding or experiencing unusual or high levels of risk.

The OCC, the FRB, and the FDIC, under the auspices of the Federal Financial Institutions Examination Council, have developed uniform Reports of Condition and Income (Call Reports) for all insured commercial banks and state-chartered savings banks. The OTS requires each OTS-supervised savings association to file the Thrift Financial Report (TFR). The reporting standards for recognition and measurement in the Call Reports and

the TFR are consistent with U.S. generally accepted accounting principles (GAAP). Thus, there are no significant differences in regulatory accounting standards for regulatory reports filed with the federal banking agencies. Only one minor difference remains between the accounting standards of the OTS and those of the other federal banking agencies, and that difference relates to push-down accounting, as more fully explained below.

Differences in Capital Standards Among the Federal Banking Agencies

Financial Subsidiaries

The Gramm-Leach-Bliley Act (GLBA) establishes the framework for financial subsidiaries of banks.[1] GLBA amends the National Bank Act to permit national banks to conduct certain expanded financial activities through financial subsidiaries. Section 121(a) of the GLBA (12 U.S.C. 24a) imposes a number of conditions and requirements upon national banks that have financial subsidiaries, including specifying the treatment that applies for regulatory capital purposes. The statute requires that a national bank deduct from assets and tangible equity the aggregate amount of its equity investments in financial subsidiaries. The statute further requires that the financial subsidiary's assets and liabilities not be consolidated with those of the parent national bank for applicable capital purposes.

State member banks may have financial subsidiaries subject to all of the same restrictions that apply to national banks.[2] State nonmember banks may also have financial subsidiaries, but they are subject only to a subset of the statutory requirements that apply to national banks and state member banks.[3] Finally, national banks, state member banks, and state nonmember banks may not establish or acquire a financial subsidiary or commence a new activity in a financial subsidiary if the bank, or any of its insured depository institution affiliates, has received a less than satisfactory rating as of its most recent examination under the Community Reinvestment Act.[4]

The OCC, the FDIC, and the FRB adopted final rules implementing their respective provisions of Section 121 of GLBA for national banks in March 2000, for state nonmember banks in January 2001, and for state member banks in August 2001. GLBA did not provide new authority to OTS-supervised savings associations to own, hold, or operate financial subsidiaries, as defined.

Subordinate Organizations Other Than Financial Subsidiaries

Banks supervised by the OCC, the FRB, and the FDIC generally consolidate all significant majority-owned subsidiaries other than financial subsidiaries for regulatory capital purposes. This practice assures that capital requirements are related to the aggregate credit (and, where applicable, market) risks to which the banking organization is exposed. For subsidiaries other than financial subsidiaries that are not consolidated on a line-for-line basis for financial reporting purposes, joint ventures, and associated companies, the parent banking organization's investment in each such subordinate organization is, for risk-based capital purposes, deducted from capital or assigned to the 100 percent risk-weight category, depending upon the circumstances. The FRB's and the FDIC's rules also permit the banking organization to consolidate the investment on a pro rata basis in appropriate circumstances. These options for handling unconsolidated subsidiaries, joint ventures, and associated companies for purposes of determining the capital adequacy of the parent banking organization provide the agencies with the flexibility necessary to ensure that institutions maintain capital levels that are commensurate with the actual risks involved.

Under the OTS's capital regulations, a statutorily mandated distinction is drawn between subsidiaries, which generally are majority-owned, that are engaged in activities that are permissible for national banks and those that are engaged in activities ''impermissible'' for national banks. Where subsidiaries engage in activities that are impermissible for national banks, the OTS requires the deduction of the parent's investment in these subsidiaries from the parent's assets and capital. If a subsidiary's activities are permissible for a national bank, that subsidiary's assets are generally consolidated with those of the parent on a line-for-line basis. If a subordinate organization, other than a subsidiary, engages in impermissible activities, the OTS will generally deduct investments in and loans to that organization.[5] If such a subordinate organization engages solely in permissible activities, the OTS may, depending upon the nature and risk of the activity, either assign investments in and loans to that organization to the 100 percent risk-weight category or require full deduction of the investments and loans.

Collateralized Transactions

The FRB and the OCC assign a zero percent risk weight to claims collateralized by cash on deposit in the institution or by securities issued or guaranteed by the U.S. Government, U.S. Government agencies, or the central governments of other countries that are members of the Organization for Economic Cooperation and Development (OECD). The OCC and the FRB rules require the collateral to be marked to market daily and a positive margin of collateral protection to be maintained daily. The FRB requires qualifying claims to be fully collateralized, while the OCC rule permits partial collateralization.

The FDIC and the OTS assign a zero percent risk weight to claims on qualifying securities firms that are collateralized by cash on deposit in the institution or by securities issued or guaranteed by the U.S. Government, U.S. Government agencies, or other OECD central governments. The FDIC and the OTS accord a 20 percent risk weight to such claims on other parties.

[1] A national bank that has a financial subsidiary must satisfy a number of statutory requirements in addition to the capital deduction and deconsolidation requirements described in the text. The bank (and each of its depository institution affiliates) must be well capitalized and well managed. Asset size restrictions apply to the aggregate amount of assets of all of the bank's financial subsidiaries. Certain debt rating requirements apply, depending on the size of the national bank. The national bank is required to maintain policies and procedures to protect the bank from financial and operational risks presented by the financial subsidiary. It is also required to have policies and procedures to preserve the corporate separateness of the financial subsidiary and the bank's limited liability. Finally, transactions between the bank and its financial subsidiary generally must comply with the Federal Reserve Act's (FRA) restrictions on affiliate transactions and the financial subsidiary is considered an affiliate of the bank for purposes of the anti-tying provisions of the Bank Holding Company Act. See 12 U.S.C. Section 5136A.

[2] See 12 U.S.C. Section 335 (state member banks subject to the ''same conditions and limitations'' that apply to national banks that hold financial subsidiaries).

[3] The applicable statutory requirements for state nonmember banks are as follows. The bank (and each of its insured depository institution affiliates) must be well capitalized. The bank must comply with the capital deduction and deconsolidation requirements. It must also satisfy the requirements for policies and procedures to protect the bank from financial and operational risks and to preserve corporate separateness and limited liability for the bank. Further, transactions between the bank and a subsidiary that would be classified as a financial subsidiary generally are subject to the affiliate transactions restrictions of the FRA. See 12 U.S.C. Section 1831w.

[4] See 12 U.S.C. Section 1841(l)(2).

[5] See 12 CFR Section 559.2 for the OTS's definition of subordinate organization.

Noncumulative Perpetual Preferred Stock

Under the federal banking agencies' capital standards, noncumulative perpetual preferred stock is a component of Tier 1 capital. The capital standards of the OCC, the FRB, and the FDIC require noncumulative perpetual preferred stock to give the issuer the option to waive the payment of dividends and to provide that waived dividends neither accumulate to future periods nor represent a contingent claim on the issuer.

As a result of these requirements, if a bank supervised by the OCC, the FRB, or the FDIC issues perpetual preferred stock and is required to pay dividends in a form other than cash, e.g., stock, when cash dividends are not or cannot be paid, the bank does not have the option to waive or eliminate dividends, and the stock would not qualify as noncumulative. If an OTS-supervised savings association issues perpetual preferred stock that requires the payment of dividends in the form of stock when cash dividends are not paid, the stock may, subject to supervisory approval, qualify as noncumulative.

Equity Securities of Government-Sponsored Enterprises

The FRB, the FDIC, and the OTS apply a 100 percent risk weight to equity securities of government-sponsored enterprises (GSEs), other than the 20 percent risk weighting of Federal Home Loan Bank stock held by banking organizations as a condition of membership. The OCC applies a 20 percent risk weight to all GSE equity securities.

Limitation on Subordinated Debt and Limited-Life Preferred Stock

The OCC, the FRB, and the FDIC limit the amount of subordinated debt and intermediate-term preferred stock that may be treated as part of Tier 2 capital to 50 percent of Tier 1 capital. The OTS does not prescribe such a restriction. The OTS does, however, limit the amount of Tier 2 capital to 100 percent of Tier 1 capital, as do the other agencies.

In addition, for banking organizations supervised by the OCC, the FRB, and the FDIC, at the beginning of each of the last five years of the life of a subordinated debt or limited-life preferred stock instrument, the amount that is eligible for inclusion in Tier 2 capital is reduced by 20 percent of the original amount of that instrument (net of redemptions). The OTS provides thrifts the option of using either the discounting approach used by the other federal banking agencies, or an approach which, during the last seven years of the instrument's life, allows for the full inclusion of all such instruments, provided that the aggregate amount of such instruments maturing in any one year does not exceed 20 percent of the thrift's total capital.

Tangible Capital Requirement

Savings associations supervised by the OTS, by statute, must satisfy a 1.5 percent minimum tangible capital requirement. Other subsequent statutory and regulatory changes, however, imposed higher capital standards rendering it unlikely, if not impossible, for the 1.5 percent tangible capital requirement to function as a meaningful regulatory trigger. This statutory tangible capital requirement does not apply to institutions supervised by the OCC, the FRB, or the FDIC.

Market Risk Rules

In 1996, the OCC, the FRB, and the FDIC adopted rules requiring banks and bank holding companies with significant exposure to market risk to measure and maintain capital to support that risk. The OTS did not adopt a market risk rule because no OTS-supervised savings association engaged in the threshold level of trading activity addressed by the other agencies' rules. As the nature of many savings associations' activities has changed since 1996, market risk has become an increasingly more significant risk factor to consider in the capital management process. Accordingly, the OTS has joined the other agencies in proposing a revised market risk rule.[6]

Differences in Accounting Standards Among the Federal Banking Agencies

Push-Down Accounting

Push-down accounting is the establishment of a new accounting basis for a depository institution in its separate financial statements as a result of the institution becoming substantially wholly owned. Under push-down accounting, when a depository institution is acquired in a purchase, yet retains its separate corporate existence, the assets and liabilities of the acquired institution are restated to their fair values as of the acquisition date. These values, including any goodwill, are reflected in the separate financial statements of the acquired institution, as well as in any consolidated financial statements of the institution's parent.

The OCC, the FRB, and the FDIC require the use of push-down accounting for regulatory reporting purposes when an institution's voting stock becomes at least 95 percent owned by an investor or a group of investors acting collaboratively. This approach is generally consistent with accounting interpretations issued by the staff of the Securities and Exchange Commission. The OTS requires the use of push-down accounting when an institution's voting stock becomes at least 90 percent owned by an investor or investor group.

[6] 71 FR 55958 (September 25, 2006).

Dated: April 9, 2007.

John C. Dugan,

Comptroller of the Currency.

By order of the Board of Governors of the Federal Reserve System, April 9, 2007.

Jennifer J. Johnson,

Secretary of the Board.

Dated at Washington, DC, this 11th day of April, 2007.

Federal Deposit Insurance Corporation.

Robert E. Feldman,

Executive Secretary.

Dated: April 16, 2007.

By the Office of Thrift Supervision.

John M. Reich,

Director.

[FR Doc. 07–1986 Filed 4–20–07; 8:45 am]

BILLING CODE 4810–33–P; 6210–01–P; 6714–01–P; 6720–01–P

DEPARTMENT OF THE TREASURY

Internal Revenue Service

[Revenue Procedure 2004–29]

Proposed Collection; Comment Request for Regulation Project

AGENCY: Internal Revenue Service (IRS), Treasury.

ACTION: Notice and request for comments.

SUMMARY: The Department of the Treasury, as part of its continuing effort to reduce paperwork and respondent burden, invites the general public and other Federal agencies to take this opportunity to comment on proposed and/or continuing information collections, as required by the Paperwork Reduction Act of 1995, Public Law 104–13 (44 U.S.C. 3506(c)(2)(A)). Currently, the IRS is soliciting comments concerning Revenue Procedure 2004–29, Statistical Sampling in § 274 Context.

DATES: Written comments should be received on or before June 22, 2007 to be assured of consideration.

ADDRESSES: Direct all written comments to Glenn Kirkland, Internal Revenue Service, room 6512, 1111 Constitution Avenue, NW., Washington, DC 20224.

FOR FURTHER INFORMATION CONTACT: Requests for additional information or copies of the regulations should be directed to Larnice Mack at Internal Revenue Service, room 6512, 1111 Constitution Avenue, NW., Washington, DC 20224, or at (202) 622–3179, or through the internet at (*Larnice.Mack@irs.gov*).

SUPPLEMENTARY INFORMATION:

Title: Statistical Sampling in § 274 Contest.

OMB Number: 1545–1847.

Revenue Procedure 2004–29.

Abstract: Revenue Procedure 2004–29 prescribes the statistical sampling methodology by which taxpayers under examination, making claims for refunds or filing original returns may establish the amounts of substantiated meal and entertainment expenses that are excepted from the 50% deduction disallowance of section 274(n)(1) under section 274(n)(2)(A),(C),(D), or (E).

Current Actions: There are no changes being made to the revenue procedure at this time.

Type of Review: Extension of a currently approved collection.

Affected Public: Business or other for-profit organizations.

Estimated Number of Respondents: 400.

Estimated Average Time per Respondent: 8 hours.

Estimated Total Annual Burden Hours: 3,200.

The following paragraph applies to all the collections of information covered by this notice.

The following paragraph applies to all of the collections of information covered by this notice:

An agency may not conduct or sponsor, and a person is not required to respond to, a collection of information unless the collection of information displays a valid OMB control number. Books or records relating to a collection of information must be retained as long as their contents may become material in the administration of any internal revenue law. Generally, tax returns and tax return information are confidential, as required by 26 U.S.C. 6103.

Request for Comments: Comments submitted in response to this notice will be summarized and/or included in the request for OMB approval. All comments will become a matter of public record.

Comments Are Invited On: (a) Whether the collection of information is necessary for the proper performance of the functions of the agency, including whether the information shall have practical utility; (b) the accuracy of the agency's estimate of the burden of the collection of information; (c) ways to enhance the quality, utility, and clarity of the information to be collected; (d) ways to minimize the burden of the collection of information on respondents, including through the use of automated collection techniques or other forms of information technology; and (e) estimates of capital or start-up costs and costs of operation, maintenance, and purchase of services to provide information.

Approved: April 12, 2007.

Glenn Kirkland,

IRS Reports Clearance Officer.

[FR Doc. E7–7603 Filed 4–20–07; 8:45 am]

BILLING CODE 4830–01–P

DEPARTMENT OF THE TREASURY

Internal Revenue Service

Proposed Collection; Comment Request for Revenue Procedure 98–32

AGENCY: Internal Revenue Service (IRS), Treasury.

ACTION: Notice and request for comments.

SUMMARY: The Department of the Treasury, as part of its continuing effort to reduce paperwork and respondent burden, invites the general public and other Federal agencies to take this opportunity to comment on proposed and/or continuing information collections, as required by the Paperwork Reduction Act of 1995, Public Law 104–13 (44 U.S.C. 3506(c)(2)(A)). Currently, the IRS is soliciting comments concerning Revenue Procedure 98–32, Electronic Federal Tax Payment System (EFTPS) Programs for Reporting Agents.

DATES: Written comments should be received on or before June 22, 2007 to be assured of consideration.

ADDRESSES: Direct all written comments to Glenn Kirkland, Internal Revenue Service, room 6516, 1111 Constitution Avenue, NW., Washington, DC 20224.

FOR FURTHER INFORMATION CONTACT: Requests for additional information or copies of the regulations should be directed to Larnice Mack at Internal Revenue Service, room 6512, 1111 Constitution Avenue, NW., Washington, DC 20224, or at (202)622–3179, or through the Internet at (*Larnice.Mack@irs.gov*).

SUPPLEMENTARY INFORMATION:

Title: Electronic Federal Tax Payment System (EFTPS) Programs for Reporting Agents.

OMB Number: 1545–1601.

Revenue Procedure Number: Revenue Procedure 98–32.

Abstract: This revenue procedure provides information about the Electronic Federal Tax Payment System (EFTPS) programs for Batch Filers and Bulk Filers (Filers). EFTPS is an electronic remittance processing system for making federal tax deposits (FTDs) and federal tax payments (FTPs). The Batch Filer and Bulk Filer programs are used by Filers for electronically submitting enrollments, FTDs, and FTPs on behalf of multiple taxpayers.

Current Actions: There are no changes being made to this revenue procedure at this time.

Type of Review: Extension of a currently approved collection.

Affected Public: Business or other for-profit organizations.

Estimated Number of Respondents: 1,500.

Estimated Average Time per Respondent: 82 hrs, 23 min.

Estimated Total Annual Burden Hours: 123,567.

The following paragraph applies to all the collections of information covered by this notice:

An agency may not conduct or sponsor, and a person is not required to respond to, a collection of information unless the collection of information displays a valid OMB control number. Books or records relating to a collection of information must be retained as long as their contents may become material in the administration of any internal revenue law. Generally, tax returns and tax return information are confidential, as required by 26 U.S.C. 6103.

Request for Comments: Comments submitted in response to this notice will be summarized and/or included in the request for OMB approval. All comments will become a matter of public record.

Comments Are Invited On: (a) Whether the collection of information is necessary for the proper performance of the functions of the agency, including whether the information shall have practical utility; (b) the accuracy of the agency's estimate of the burden of the collection of information; (c) ways to enhance the quality, utility, and clarity of the information to be collected; (d) ways to minimize the burden of the collection of information on respondents, including through the use of automated collection techniques or other forms of information technology; and (e) estimates of capital or start-up costs and costs of operation, maintenance, and purchase of services to provide information.

Approved: April 11, 2007.

Glenn Kirkland,

IRS Reports Clearance Officer.

[FR Doc. E7–7604 Filed 4–20–07; 8:45 am]

BILLING CODE 4830–01–P

Federal Register

Monday,
April 23, 2007

Part II

Department of the Interior

Fish and Wildlife Service

50 CFR Part 17

Endangered and Threatened Wildlife and Plants; Annual Notice of Findings on Resubmitted Petitions for Foreign Species; Annual Description of Progress on Listing Actions; Proposed Rule

DEPARTMENT OF THE INTERIOR

Fish and Wildlife Service

50 CFR Part 17

Endangered and Threatened Wildlife and Plants; Annual Notice of Findings on Resubmitted Petitions for Foreign Species; Annual Description of Progress on Listing Actions

AGENCY: Fish and Wildlife Service, Interior.

ACTION: Review of findings on petitions.

SUMMARY: In this review, we announce our annual petition findings for foreign species, as required under section 4(b)(3)(C)(i) of the Endangered Species Act of 1973, as amended. When, in response to a petition, we find that listing a species is warranted but precluded, we must complete a new status review each year until we publish a proposed rule or make a determination that listing is not warranted. These subsequent status reviews and the accompanying 12-month findings are referred to as ''resubmitted'' petition findings.

Information contained in this review describes our status review of 56 foreign taxa that were the subjects of previous warranted-but-precluded findings. Based on our review, we find that 50 species continue to warrant listing, but that their listing remains precluded by higher-priority listing actions (see Table 1). For six species previously found to be warranted but precluded, listing is now warranted. We will promptly publish a listing proposal for those six species.

With this review, we are requesting additional status information for the 50 species that remain warranted-but-precluded by higher priority listing actions. We will consider this information in preparing listing documents and future resubmitted petition findings. This information will also help us to monitor the status of the taxa and in conserving them.

DATES: We will accept comments on these resubmitted petition findings at any time.

ADDRESSES: Submit any comments, information, and questions by mail to the Chief, Division of Scientific Authority, U.S. Fish and Wildlife Service, 4401 N. Fairfax Drive, Room 750, Arlington, Virginia 22203; by fax to 703–358–2276; or by e-mail to *ScientificAuthority@fws.gov.* Comments and supporting information will be available for public inspection, by appointment, Monday through Friday from 8 a.m. to 4 p.m. at the above address.

FOR FURTHER INFORMATION CONTACT: Marie T. Maltese at the above address, or by telephone, 703–358–1708; fax, 703–358–2276; or e-mail, *ScientificAuthority@fws.gov*; or through the Federal eRulemaking Portal at *www.regulations.gov*.

SUPPLEMENTARY INFORMATION:

Background

The Endangered Species Act of 1973, as amended (Act) (16 U.S.C. 1531 *et seq.*), provides two mechanisms for considering species for listing. First, we can identify and propose for listing those species that are endangered or threatened based on the factors contained in section 4(a)(1). We implement this through the candidate program. Candidate taxa are those taxa for which we have sufficient information on file relating to biological vulnerability and threats to support a proposal to list the taxa as endangered or threatened, but for which preparation and publication of a proposed rule is precluded by higher-priority listing actions. None of the species covered by this review were assessed through the candidate program; they were the result of public petitions to add species to the Lists of Endangered and Threatened Wildlife and Plants (Lists), which is the other mechanism for considering species for listing. Under section 4(b)(3)(A), when we receive such a petition, we must determine within 90 days, to the maximum extent practicable, whether the petition presents substantial scientific or commercial information indicating that the petitioned action may be warranted (90-day finding). If we make a positive 90-day finding, we are required to promptly commence a review of the status of the species. Section 4(b)(3)(B) of the Act requires that we must make one of three findings within 12 months of the receipt of the petition (12-month finding).

The first possible 12-month finding is that listing is not warranted, in which case we need not take any further action on the petition. The second possibility is that we may find that listing is warranted, in which case we must promptly publish a proposed rule to list the species. Once we publish a proposed rule for a species, section 4(b)(5) and (6) govern further procedures, regardless of whether or not we issued the proposal in response to the petition. The third possibility is that we may find that listing is warranted but precluded. A warranted-but-precluded finding means that immediate publication of a proposed rule to list a species is precluded by higher-priority listing proposals, and expeditious progress is being made to add and remove species from the Lists, as appropriate.

Pursuant to section 4(b)(3)(C)(i) of the Act, when, in response to a petition, we find that listing a species is warranted but precluded, we must make a new 12-month finding annually until we publish a proposed rule or make a determination that listing is not warranted. These subsequent 12-month findings are referred to as ''resubmitted'' petition findings. This notice contains our resubmitted petition findings for all foreign species that are currently the subject of outstanding petitions.

Previous Notices

The species discussed in this review were the result of three separate petitions submitted to the Service to list a number of foreign bird and butterfly species as threatened or endangered under the Act. We received petitions to list foreign bird species on November 28, 1980, and April 30, 1991 (46 FR 26464 and 56 FR 58664 respectively). On January 10, 1994, we received a petition to list 7 butterfly species as threatened or endangered (59 FR 24117).

We took several actions on these petitions, and to notify the public, we published earlier petition findings, status reviews, and petition finding reviews that included foreign species in the **Federal Register** on May 12, 1981 (46 FR 26464); January 20, 1984 (49 FR 2485); May 10, 1985 (50 FR 19761); January 9, 1986 (51 FR 996); July 7, 1988 (53 FR 25511); December 29, 1988 (53 FR 52747); January 6, 1989 (54 FR 554); November 21, 1991 (56 FR 58664); March 28, 1994 (59 FR 14496); May 10, 1994 (59 FR 24117), and January 12, 1995 (60 FR 2899). Our most recent review of petition findings was published on May 21, 2004 (69 FR 29354).

Since our last review of petition findings we have taken two listing actions related to this notice. On December 7, 2004, we published our 12-month finding on a petition to list seven foreign species of Swallowtail butterflies as threatened or endangered (69 FR 70580). We also published a proposed rule on November 22, 2006, to list six foreign bird species as endangered (71 FR 67530).

Findings on Resubmitted Petitions

This review describes our resubmitted petition findings for 56 foreign species for which we had previously found listing to be warranted but precluded. We have considered all of the new

information we have obtained since the previous findings. As a result of our review, we find that warranted-but-precluded findings remain appropriate for 50 species. We emphasize that we are not proposing these species for listing by this review, but we do anticipate developing and publishing proposed listing rules for these species in the future, with an objective of progressively and conclusively addressing all 50 foreign species within a reasonable time-frame.

Also as a result of this review, we find that for six species, listing is warranted. We will promptly publish proposals to list six species in the Family Procellariidae (tube-nosed seabirds). These species include: the Fiji petrel (*Pterodroma macgillivrayi*), the Chatham petrel (*Pterodroma axillaris*), Cook's petrel (*Pterodroma cookii*), the Galapagos petrel (*Pterodroma phaeopygia*), the magenta petrel (*Pterodroma magentae*), and Heinroth's shearwater (*Puffinus heinrothi*).

We selected these six species from the list of warranted-but-precluded species for two reasons. First, this group has more Priority 2 species than any other taxonomic family in our list of warranted-but-precluded-species. The Chatham petrel, Fiji petrel, Galapagos petrel, and magenta petrel are all classified as Priority 2 species. The two other species are classified as Priority 8 (Cook's petrel) and Priority 11 (Heinroth's shearwater). Although these two species are not of the highest priority under our listing priority ranking system, all six species face similar threats. With a minimum amount of additional effort and additional resources, we can proceed with developing the proposed listing for these two species concurrent with developing the proposed listing rule for the other four members of this family. As noted in our 1983 Listing Priority Guidance (48 FR 43098), the listing priority system provides such flexibility. We will be able to consult the same experts for species information, and perhaps have them act in a peer review capacity, because the scientists are likely to be knowledgeable about multiple taxa within the Procellariidae. This efficient use of resources also will allow us to make more expeditious progress in taking action on the species whose listing has been found to be warranted but precluded.

The other reason we selected the Procellarids for our next listing proposal over the other Priority 2 species is because of the significance of the threats to the species. Procellarids are pelagic species and spend much of their lives on the wing at sea. The only time they spend any significant amount of time on land is to breed and rear young, and these species require specific islands for reproduction and rearing fledglings. Procellarids are long-lived species with low reproductive rates and juvenile mortality is often high due to predation by introduced mammalian species. As is common for all island nesting avian species, they are vulnerable to stochastic events, such as typhoons, which could result in rapid population declines or unforeseen species extinctions (Birdlife International 2006).

Based on information gathered and assessed since May 21, 2004 and December 7, 2004, we have updated our determinations of whether listing of these taxa continues to be warranted or warranted but precluded, or whether listing is no longer warranted. See Table 1 for a summary of these current determinations. Taxa in Table 1 of this notice are assigned to two status categories, noted in the ''categories'' column at the left side of the table. We identify the taxa for which we continue to find that listing is warranted but precluded by a ''C'' in the category column. The other category is for those species for which we find that listing is warranted and designate these taxa with an ''L.'' For this notice, we have not determined that listing is no longer warranted for any species whose listing was previously found to be warranted but precluded. The column labeled ''Priority'' indicates the listing priority number (LPN) for all warranted or warranted-but-precluded taxa. We assign the LPN based on the immediacy and magnitude of threats, as well as taxonomic status. A complete description of our listing priority system was published on September 21, 1983 (48 FR 43098). Following the scientific name of each taxon (third column) is the family designation (fourth column) and the common name, if one exists (fifth column). The sixth column provides the known historical range for the taxon. The avian species in Table 1 are listed taxonomically.

Findings on Species for Which Listing Is Warranted

Birds

We will promptly prepare listing proposals for the Fiji petrel (*Pterodroma macgillivrayi*), the Chatham petrel (*Pterodroma axillaris*), Cook's petrel (*Pterodroma cookii*), the Galapagos petrel (*Pterodroma phaeopygia*), the magenta petrel (*Pterodroma magentae*), and Heinroth's shearwater (*Puffinus heinrothi*). These species are birds in the Family Procellariidae.

Fiji petrel (*Pterodroma macgillivrayi*)

The Fiji petrel is a marine species and presumably pelagic (del Hoyo *et al.* 1992). It was originally known from just one specimen collected in 1855 on Gau Island and more recently from eight records of sightings on the island since 1983 (BirdLife International 2000). The only other record is a reported sighting at sea over 200 km north of Gau (Watling 2000, as cited in BirdLife International 2000). The Fiji petrel's breeding grounds have not been discovered, but may be located in areas of undisturbed mature forest, on rocky, mountainous ground, or in the cloud forest highlands of Gau Island (del Hoyo *et al.* 1992, Rare 2006). The species is classified as Critically Endangered by the IUCN because it is inferred, given the paucity of recent records, that there is only a tiny population confined to an extremely small breeding area (IUCN 2006). The population is estimated at fewer than 50 individuals and is assumed to be declining because of predation by feral cats which are believed to prey upon nestling and fledgling petrels. The reduction in juvenile survival rates and declines in recruitment are believed to threaten the species' long-term survival (BirdLife International 2000). Very little is known about the species and its life history. It is protected under Fijian law, and priorities for the species include conducting surveys on Gau and other islands with suitable habitat and reinforcing existing community awareness (BirdLife International 2000). With the goal of strengthening community awareness in mind, from 2002–2004, a local conservationist on Gau Island, Milika Rati, conducted the Pride campaign (Rare 2006). Ms. Rati chose the Fiji petrel as the flagship mascot for the Pride campaign and used a series of high-profile activities to raise awareness of the plight of the endangered Fiji petrel. During the late stages of the campaign there was finally a confirmed sighting of a Fiji petrel (Rare 2006). A survey conducted at the close of the campaign found that 99 percent of participants thought natural resource protection was important and 94 percent knew that the Fiji petrel is threatened with extinction. The chiefs of all 16 villages on the island signed a formal agreement supporting the creation of a bird sanctuary on the island for the species (Rare 2006). The Australian Regional National Heritage Programme continues to fund the Pride campaign on Gau Island. The Wildlife Conservation Society, BirdLife International, and the National Trust of Fiji Islands are collaborating to follow

recommendations made by Ms. Rati at the end of the initial Pride campaign (Rare 2006).

The importance of raising public awareness of the species' threats and the recognition of the value of natural resource protection are intrinsic measures that are invaluable for species such as the Fiji petrel. Although resource economists frequently struggle to assign such intangible measures a monetary value, we recognize their importance and value in furthering the protection and conservation of threatened and endangered species. Creation of the bird sanctuary is an important initial step to preserve essential habitat for the Fiji petrel and the awareness of the value of natural resource protection should help to alleviate any future man-made threats. Public awareness alone cannot address population declines, the genetic effects of small populations, or stochastic events that can destroy an entire population during a single incident. However, the Fijian Pride campaign has united the island's efforts to preserve the Fiji petrel and its habitat; therefore, it is anticipated that current and potential measures will help to reduce the threats to the species as the campaign continues to broaden in scope.

The Fiji petrel does not represent a monotypic genus. The magnitude of threat to the species is high due to the species' small population size which has continued to decrease since our previous notice, and the immediacy of threat is imminent due to continued predation by feral cats. Therefore, it receives a priority rank of 2.

Chatham petrel (*Pterodroma axillaris*; Previously Referred to as *Pterodroma hypoleuca axillaris*)

The Chatham petrel is found only on South East Island (Rangatira) in the Chatham Islands of New Zealand (BirdLife International 2006). It is marine and presumably pelagic, and breeds on coastal lowlands and slopes in areas with low forest, bracken, or rank grass (del Hoyo *et al.* 1992). It nests in burrows amongst low vegetation and roots on flat to moderately sloping ground (Marchant and Higgins 1990). This species is classified as Critically Endangered by IUCN because it is restricted to South East Island and inferred to be continuing to decline due to competition from other native burrowing seabirds (IUCN 2006). The population estimate for this species is 800–1,000 birds with a decreasing population trend (BirdLife International 2000). There is intense competition for burrows on South East Island with the abundant broad-billed prion (*Pachyptila vittata*), which may be the cause of low breeding success and the high rate of pair bond disruption (BirdLife International 2000). As a conservation measure, artificial nest sites have been provided, and burrows have been blocked to prevent occupation by *P. vittata* (BirdLife International 2000). Although these actions have greatly improved breeding success, only a small proportion of breeding burrows have been located (Taylor 2000).

This species does not represent a monotypic genus. It has a restricted range and its population is declining. The threat to the species is high and imminent because the threats are currently ongoing. Therefore, this species receives a priority rank of 2.

Cook's petrel (*Pterodroma cookii*)

Cook's petrel is endemic to New Zealand. It is marine and highly pelagic in temperate and subtropical waters, and rarely approaches land except for nesting (del Hoyo *et al.* 1992). Cook's petrel breeds on three islands: Little Barrier, Great Barrier, and Codfish Islands (del Hoyo *et al.* 1992), and occupies thickly forested high ridges and slopes, up to 700 m above sea level (BirdLife International 2000). This species is classified as Endangered by IUCN because it has a very small breeding range, and population numbers are decreasing (IUCN 2006). Furthermore, there is a danger that the Great Barrier Island population may soon be extirpated because only four nest burrows have been located in recent years and it is estimated that fewer than 20 pairs inhabit the island for breeding purposes (BirdLife International 2006). The population estimate for this species is 150,000–200,000 birds (BirdLife International 2006). Threats to the species are predominantly from invasive predator species such as feral cats, black rats (*Rattus rattus*), Pacific rats (*R. exulans*), and the weka (*Gallirallus australis*), which are major predators of adults and chicks (Heather and Robertson 1997; Taylor 2000). By 1980, feral cats were eradicated from Little Barrier Island, and wekas were eradicated from Codfish Island between 1980 and 1985 (Taylor 2000). Pacific rats were successfully eradicated from Codfish Island in August 1998, and an eradication program on Little Barrier Island has been proposed (Conservation News 2002).

This species does not represent a monotypic genus, and has a fairly large population size; however, the population is decreasing. Primary threats to the species are a limited breeding range and predation by introduced species. Loss of the Great Barrier Island population would lessen the overall species' range and distribution by one-third. The unique contributions of the Great Barrier Island population's gene pool would no longer be available to the species.

Although the threat of predation by introduced species has been reduced by targeted eradication programs, these programs are not completely successful and must be adequately funded to continue as a protective measure for the petrels. Finally, as is common for all island species, is concern for their vulnerability to stochastic events, such as typhoons, which could result in rapid population declines or extinction of the species.

Therefore, although the threat to the species is moderate due to the current large population estimate, it is imminent because the population is decreasing, an important segment of the population is likely to become extinct in the near future, and the threat from predation remains. We assigned this species a priority ranking of 8.

Galapagos petrel (*Pterodroma phaeopygia*; previously referred to as *Pterodroma phaeopygia phaeopygia*)

The Galapagos petrel is a pelagic marine bird endemic to the Galapagos Islands, Ecuador (BirdLife International 2006). It breeds on Santa Cruz, Floreana, Santiago, San Cristobal, Isabela, and possibly other islands in the Galapagos archipelago (Cruz and Cruz 1987; H. Vargas and F. Cruz *in litt.* 2000, as cited in BirdLife International 2006). This species is classified as Critically Endangered by IUCN because of its continuing history of declines (IUCN 2002). In the early 1980s, Galapagos petrel populations underwent extremely rapid declines; estimates of population declines are as high as 81 percent in 4 years, and it is likely to have declined by more than 80 percent in the last 60 years (three generations) (IUCN 2002). The total population estimate for this species is 20,000–60,000 birds with a decreasing population trend (BirdLife International 2000). Threats to survival include introduced dogs, feral cats, and pigs, which take eggs, young, and adults; black rats and brown rats (*R. norvegicus*), which take eggs and chicks; nest-site destruction by goats, donkeys, cattle, and horses; and predation by Galapagos hawks (*Buteo galapagoensis*) (Cruz and Cruz 1987; Cruz and Cruz 1996). Predator control and petrel monitoring programs are currently in place on Floreana, Santa Cruz, and Santiago Islands (H. Vargus and F. Cruz *in litt.* 2000, as cited in BirdLife

International 2006). The breeding areas on Santa Cruz, Floreana, and San Cristobal have been severely reduced due to vegetation clearance for agricultural land development and intensive grazing by cattle (Cruz and Cruz 1987; Cruz and Cruz 1996). Nearly half the species' breeding range on Santa Cruz Island is under cultivation (Baker 1980, as cited in BirdLife International 2000). The Galapagos Islands are a national park and were declared a World Heritage Site (WHS) in 1979 (BirdLife International 2006). The WHS designation encourages Ecuador to work carefully to enact suitable conservation laws and implement existing laws to protect the unique fauna and flora of the Galapagos Islands (UNESCO 2007).

This species does not represent a monotypic genus, but it is declining and has persistent threats that are high in magnitude, such as nest predation by feral animals. This and other threats are imminent because they are ongoing; for instance, loss of breeding habitat that has been cleared for agricultural purposes is a threat that is nearly impossible to resolve. Therefore, this species receives a priority rank of 2.

Magenta petrel (*Pterodroma magentae*)

The magenta petrel is known from Chatham Island, New Zealand. It breeds in a fragmented colony under dense forest, is a marine bird species, and presumably pelagic (BirdLife International 2000, del Hoyo *et al.* 1992). The magenta petrel was rediscovered in 1978 after 10 years of intensive searching (Crockett 1994, as cited in BirdLife International 2006). This species is listed as Critically Endangered by IUCN because it has undergone an historic decline that is assumed to be greater than 80 percent in 60 years, it has a very small population, and it is restricted to one extremely small location (IUCN 2002). The population is estimated to number 100–150 individuals. It is possible that the species' long-term decline may have begun to stabilize, but it is premature to assume that there is not a continuing decline until this information is verified (BirdLife International 2000). The species is predominantly threatened by introduced species that prey upon eggs, chicks, and adults for food; compete for burrows, or destroy nesting sites (BirdLife International 2000).

The magenta petrel does not represent a monotypic genus. The magnitude of threat to the species is high due to its historic rapid decline, the current estimate of a very small population, and a single, small breeding location. These threats render the species highly vulnerable to extirpation during a single stochastic event. The magnitude is imminent because the threats are ongoing, and there is very little information available about the species' current population dynamics. It therefore receives a priority rank of 2.

Heinroth's shearwater (*Puffinus heinrothi*)

The Heinroth's shearwater is known from the Bismarck Archipelago, around Bougainville in Papua New Guinea, and Kolombangara in the Solomon Islands (Buckingham *et.al.* 1995, as cited in BirdLife International 2000). It is a marine bird species, and presumably pelagic (del Hoyo *et al.* 1992). The Heinroth's shearwater is believed to breed on high, inaccessible mountains. Introduced rats, feral cats and dogs are considered potential threats to the species. BirdLife International has identified a number of target conservation actions for the species including: demographic surveys and an assessment of the presence of introduced mammals on potential breeding grounds (BirdLife International 2000). The Heinroth's shearwater is categorized as Vulnerable by the IUCN because it is believed to have a very small population and breeding range (IUCN 2002). The population estimate for this species is 250–999 birds with an unknown population trend (BirdLife International 2000). There is no substantial evidence of a decline (IUCN 2002).

Heinroth's shearwater does not represent a monotypic genus. There is no substantial evidence of a population decline; however, because of its small population size it faces threats that are moderate and non-imminent. This species was designated a priority rank of 11.

Findings on Species for Which Listing Is Warranted but Precluded

We have found that, for the following 50 bird species, issuance of proposed listing rules, even for species with the highest listing priority numbers, will continue to be precluded over the next year due to the need to complete pending proposals to determine if other species are threatened or endangered. We will continue to monitor the status of these species as new information becomes available. Our review of new information will determine if a change in status is warranted, including the need to emergency list any species or change the LPN of any of the species.

As explained in the previous section, one of our highest priorities in the coming year is to prepare proposed listing rules for the six species of Procellarids. Over the next year the issuance of additional proposed listing rules will also be precluded due to the need to work on the following listing actions. We will be working on a final listing determination for the six foreign bird species that we proposed for listing on November 23, 2006. Reaching a final decision on this proposed rule is consistent with the statutory deadlines under section 4(b)(5) and is a high priority that takes precedence over proposed listings for additional warranted-but-precluded species.

A foreign government has petitioned us to delist a species that is under its jurisdiction and is listed under the Act. Mexico submitted a petition to delist the Morelet's crocodile (*Crocodylus moreletii*). The Morelet's crocodile petition was submitted by the Mexican government through the National Commission for the Understanding and Use of Biodiversity (CONABIO), and was received by the Service on May 26, 2005. A 90-day finding was published on June 28, 2006 (71 FR 36743) finding that the petitioned action may be warranted. The 12-month review is currently in progress and we must complete work on this petition consistent with our responsibilities under section 4(b)(3) of the Act.

We are also in the process of making a final determination on whether to delist the Mexican bobcat (*Lynx rufus escuinapae*). The United States, with support from Mexico and other countries, proposed to transfer the Mexican bobcat from Appendix I to Appendix II of the Convention on International Trade in Endangered Species of Wild Fauna and Flora (CITES), based on the bobcat's widespread and stable status in Mexico and the questionable taxonomy of the subspecies. The U.S. proposal was accepted and the change went into effect on November 6, 1992. On July 8, 1996, we received a petition from the National Trappers Association, Inc. to delist the Mexican bobcat. Our 12-month finding and proposed rule were published on May 19, 2005 (70 FR 28895). Under section 4(b)(6) of the Act, we have a statutory responsibility to complete this rule-making process.

We are also making a final determination on whether to delist the scarlet-chested parakeet (*Neophema splendida*) and the turquoise parakeet (*Neophema pulchella*). On September 22, 2000, we announced a review of all endangered and threatened foreign species in the Order Psittaciformes as part of a 5-year review under section 4(c)(2) of the Act (65 FR 57363). One commenter suggested we consider these two species for delisting. The individual

provided substantial scientific information, including information and correspondence with the government of Australia (the range country of these species) regarding the status of both species. Under section 4(b)(6) of the Act, we have a statutory responsibility to complete this rule-making process.

On January 4, 2005, we received a petition from 14 county officials representing 13 western States to list the Northern snakehead fish (*Channa argus*) as threatened or endangered under the Act, and further, to designate the Chesapeake Bay region as critical habitat. On March 5, 2005, we received a petition from a private individual to de-list the tiger (*Panthera tigris*). We have a statutory responsibility under section 4(b)(3) of the Act to process these petitions.

On November 29, 2006, we received a petition from the Center for Biological Diversity (CBD) to list 12 species of penguins as threatened or endangered under the Act. The petitioned species include the emperor penguin (*Aptenodytes forsteri*) as threatened; Southern rockhopper penguin (*Eudyptes chrysocome*) as threatened; Northern rockhopper penguin (*Eudyptes moseleyi*) as endangered; Fiordland crested penguin (*Eudyptes pachyrhynchus*) as endangered; snares crested penguin (*Eudyptes robustus*) as threatened; erect-crested penguin (*Eudyptes sclateri*) as endangered; macaroni penguin (*Eudyptes chrysolophus*) as threatened, or, if not listed as threatened, CBD requested that we consider the South Georgia and Marion populations as Distinct Population Segments, or as a ''significant portion'' of the species range; royal penguin (*Eudyptes schlegeli*) as threatened; white-flippered penguin (*Eudyptula albosignata*) as endangered; yellow-eyed penguin (*Megadyptes antipodes*) as endangered; African penguin (*Spheniscus demersus*) as endangered; and Humboldt penguin (*Spheniscus humboldti*) as endangered. We have a statutory responsibility under section 4(b)(3) of the Act to process this petition and are preparing our 90-day petition finding.

In addition to these listing actions, we are also currently preparing a 5-year notice of review of all foreign-listed wildlife species as required under section 4(c)(2) of the Act. During the coming year, we will also be working on the 2008 ANOR, which sets priorities for the next set of listing actions. Using our best efforts to meet our statutory responsibilities under the Act is a high priority.

Our ability to complete determinations on whether any species is endangered or threatened is also a function of available resources. The number of species' proposals pending, and the rate at which we can process proposals and add more proposals, depends on the staff resources available. Listing of foreign species under the Act is carried out by a different Service program than the domestic Endangered Species program. The Division of Scientific Authority (DSA), within the Service's International Affairs program, is solely responsible for the development of all listing proposals for foreign species and promulgation of final rules, whether internally-driven or as the result of a citizen petition. Unlike the Service's domestic Endangered Species program, DSA does not have specific branch or field offices for endangered species functions. The DSA program consists of a Division Chief, a Branch Chief, two botanists, and three zoologists, when fully staffed. As of September 2005, DSA had one zoologist position vacant, and the Branch Chief position was vacant for most of 2006. Both positions were finally filled in August, 2006. We dedicate over 50 percent of our existing staff resources to foreign endangered species listing activities, including processing petitions, preparation of the ANOR, and listing species which have been designated as warranted.

In determining the resources available for listing actions under the Act, we must also balance these needs with the resources needed for completing the other non-discretionary activities that are the responsibility of DSA staff and that are funded under the International Wildlife Trade budget component of the International Affairs program. This budget is used for not only the ESA foreign listing activities, but also issuing permits under the Act, mandatory activities for U.S. implementation of CITES, implementing the Wild Bird Conservation Act of 1992, certain permitting provisions of the Marine Mammal Protection Act, and parts of the Pelly Amendment (Section 8 of the Fisherman's Protective Act).

The United States is a party to CITES; and has the responsibility under the Treaty to implement and enforce its provisions (see Article VIII, paragraph 1). CITES regulates and monitors listed species in trade through a system of permits. Species are listed based on the level of threat to the species and that species' need for conservation in international trade. Section 8A of the Act designates the Service, through its Scientific Authority and Management Authority, to carry out the United States' CITES responsibilities. As required under Articles III and IV of CITES, the DSA staff is responsible for reviewing and making non-detriment findings for permits for the export of species listed in Appendix-I and Appendix-II of CITES , and the import of Appendix-I species. In 2004, DSA either provided written non-detriment findings or written non-detriment advice for approximately 3,192 permits that were issued by the Service's Division of Management Authority (DMA). In 2005, that number had increased to approximately 5,854 issued permits. These figures do not include the number of non-detriment findings made for permit applications that were denied, abandoned, or withdrawn. DSA's other CITES responsibilities include proposing species for listing or delisting at the biennial meeting of the Conference of the Parties (CoP) (see Article XI), and participating in the CITES Plants and Animals Committee meetings, between each CoP, for the dissemination of biological information and other Treaty business.

The Division of Management Authority (DMA), which also operates under the International Wildlife Trade budget, is responsible for issuing permits under the Act, other ESA activities such as conducting section 7 consultations, certain permitting provisions of the Marine Mammal Protection Act, issuing Injurious Wildlife permits under the Lacey Act, and implementing parts of the Pelly Amendment (section 8 of the Fisherman's Protective Act). DMA also manages CITES implementation obligations. DMA and DSA share responsibilities for implementation of the Wild Bird Conservation Act of 1992. Therefore, the resources available for ESA listing actions for foreign species is limited by these competing non-discretionary activities funded from the International Wildlife Trade budget. If additional resources become available, it will be our highest priority in the coming year to prepare proposed listing rules for additional priority 2 warranted-but-precluded species.

Birds

Junin flightless grebe (*Podiceps taczanowskii*)

The Junin flightless grebe is found only at Lake Junin, which is located 4,080 m above sea level in central Peru (Fjeldså 1981, as cited in O'Donnell and Fjedså 1997). The lake covers approximately 14,320 hectares bordered by extensive reed marshes and reaches a depth of 10 m at the center. The reed marshes are continuous in some areas of the lake shore, but they also form a mosaic with stretches of open water in

other areas. Considerable stretches of the lake are shallow, supporting dense growth of stonewort (*Chara* spp.) (del Hoyo *et al.* 1992). The Junin grebe prefers open lake habitat and remains in the center of the lake when it is not breeding. During the breeding season, however, it nests in areas of tall *Scirpus californicus tatora* or bays and channels along the outer edge of the 2–5 km-wide reed marshes surrounding the lake (O'Donnel and Fjedså 1997). The Junin grebe feeds predominantly on fish (*Orestias* spp.), which constitute approximately 90% of its diet (del Hoyo *et al.* 1992).

The Junin grebe experienced a dramatic decline during the 20th Century. The species was considered abundant in 1938, and common in 1961, with population estimates of several thousand birds (del Hoyo *et al.* 1992). Current population estimates for the Junin grebe range between 50 and 249 birds, with a decreasing population trend (BirdLife International 2006). As a result of the species' decline, and because it is endemic to a single Andean lake, the Junin grebe qualifies as Critically Endangered on the IUCN Red List (IUCN 2006). Current population numbers have been known to fluctuate considerably from year to year. Population fluctuations are believed to be tied to relatively unstable climatic conditions recently linked to El Niño/Southern Oscillation (ENSO) events, with population numbers lowest during dry years. Although the species appears able to recover in good years, it remains unclear whether this process can be sustained, particularly in the face of other, continuing threats (IUCN 2006). The original decline of this species was brought about by declines in water quality of Lake Junin due to local mining activities and variations in water levels of up to 7 m, which are linked to electrical power generation by a local hydroelectric power station. The water level draw-downs reduced nesting and foraging areas (BirdLife International 2000), and in 1969, the vegetation of Lake Junin appeared to be dyed yellow with breakdown products of sulphuric acids and toxic fumes from a copper mine (del Hoyo *et al.* 1992). Of less significance, perhaps, was the introduction of non-native trout species in the 1930s, which have replaced native fish species. Since 1975, several conservation measures have been implemented; Lake Junin was declared a protected reserve, and the Peruvian Government nationalized the mines of Cerro del Pasco in an attempt to prevent pollution by the mine (del Hoyo *et al.* 1992). Since that time, however, there has been rapid expansion of the mine, and no available information to indicate that pollution controls have been put in place (Mbendi 2007).

The Junin flightless grebe does not represent a monotypic genus. It faces threats that are high in magnitude, such as oscillations in ENSO conditions which can cause environmental conditions that are harmful to the species; and imminent because the declines in water quality are ongoing, and possibly increasing, as the result of increased production at the Cerro del Pasco mine. It therefore receives a priority rank of 2.

Greater adjutant stork (*Leptoptilos dubius*)

The greater adjutant stork was previously widespread and common, and found in much of South and Southeast Asia, from Pakistan through northern India, Nepal, and Bangladesh, to Myanmar, Thailand, Laos, Viet Nam, and Cambodia (BirdLife International 2006). However, during the 20th Century the species experienced a rapid decline, and currently the population estimate is 800–1,000 birds (BirdLife International 2006). Only two very small and highly disjunct breeding populations remain: one in Assam, India (Saikia and Bhattacharjee 1989, as cited in BirdLife International 2006), the other in Cambodia (Mundkur et al. 1995, as cited in BirdLife International 2006). During the 19th century, there were vast colonies of millions of greater adjutant storks in Burma, and del Hoyo *et al.* (1992) noted that in Calcutta there was ''almost one [stork] on every roof.'' The greater adjutant stork frequents marshes, lakes, paddy fields, and open forest, and may also be found in dry areas, such as grasslands and fields. It is commonly found feeding at carcasses and rubbish dumps at the edges of towns (BirdLife International 2006).

The greater adjutant stork is classified as Endangered by the IUCN (IUCN 2006). Major threats to the species include direct exploitation, such as hunting and egg collection from nesting colonies; habitat destruction, particularly lowland deforestation and the felling of nest trees; and drainage, agricultural conversion, pollution, and over-exploitation of wetlands. The Assam population is considered threatened by the loss of a readily available food source, due to the reduced number of open rubbish dumps for the disposal of carcasses and foodstuffs (BirdLife International 2006).

The greater adjutant stork does not represent a monotypic genus, but it faces threats that are high in magnitude and imminent because they are ongoing and likely to remain so. Conversion of the species' habitat for agricultural purposes is not likely to cease; nor will the land, once cleared, be allowed to revert back to the wild habitat which is optimal for the storks. The loss of nesting trees lessens the number of available sites for nesting, mating, and recruitment of young to the population. Drainage of wetlands to be used for cultivation further impacts the stork's habitat needs, forcing the birds into inferior habitat which increases the threats to the species survival. It therefore receives a priority rank of 2.

Andean flamingo (*Phoenicopterus andinus*)

The Andean flamingo is restricted to high-altitude salt lakes in the Andes, mainly between 3,500 and 4,500 m, from southern Peru through Bolivia to northern Chile and northwestern Argentina (del Hoyo *et al.* 1992). Population assessments for this species vary greatly, but it is believed that 50,000–100,000 individuals existed until the mid-1980s (Rocha and Quiroga 1997, as cited in BirdlLife International 2006). Commercial egg collection for food was intensive during the mid-20th Century and again in the early 1980s, with estimates of thousands of eggs being taken annually. Unfavorable water levels resulting from weather and human manipulation, mining activities, erosion of nest sites, and human disturbance are other factors that are affecting productivity. In 1997, the entire population was estimated at 34,000 individuals, indicating that the species had experienced a rapid population decline in less than 20 years (BirdlLife International 2006). Very low breeding success has been reported for this species (Flamingo Action Plan Questionnaire 1998, as cited in BirdLife International 2006), and population declines may continue unabated for many years without an accurate understanding of the extent of decline because of the extensive longevity of the species (del Hoyo 1992, as cited in BirdLife International 2006). It is also difficult to quantify the number of juvenile birds that survive to adulthood and successfully produce viable offspring. Due to the species' reproductive history, recruitment uncertainty, and the abiotic threats to the species, an assessment of the population decline and the need for conservation measures to protect the species are challenging.

The Andean flamingo is categorized as Vulnerable by the IUCN (IUCN 2006) and is also listed in Appendix II of CITES (CITES 2006). Threats include ongoing exploitation of the species as a

result of egg collection and declining habitat quality (IUCN 2006). Local conservation actions are currently underway, such as habitat management, prevention of egg collecting, and raising public awareness about the species' decline and need for additional conservation measures (BirdLife International 2006). At this time, it is difficult to assess the effectiveness of these actions in alleviating the threats to the Andean flamingo, as they have only recently been put into place. Future assessments of the species will be more likely to include such information, after the conservation actions have had sufficient time to produce tangible results.

The Andean flamingo does not represent a monotypic genus. The threats to the species are high in magnitude, such as weather-related water levels at nesting sites. The threats are imminent because they continue to occur. Exploitation, egg collection, mining activities, human disturbance, and reductions in the quality of the species' habitat are all threats that could be addressed at the local level to protect the species, yet are ongoing. This species therefore receives a priority rank of 2.

Brazilian merganser (*Mergus octosetaceus*)

The Brazilian merganser is found in extremely low numbers at a few, highly disjunct localities in south-central Brazil, eastern Paraguay, and northeastern Argentina (BirdLife International 2006). The species inhabits shallow clear-water streams and rapid rivers, preferably surrounded by dense tropical forests. It is believed to be a highly-sedentary species and presumably maintains its territory all year (del Hoyo *et al.* 1992). The Brazilian merganser is a good swimmer and diver, and feeds primarily on fish, and occasionally on aquatic insects and snails (Collar *et al.* 1992).

Recent records from Brazil, and a newly discovered northern range extension, indicate that the status of this species is better than previously considered because several additional, highly disjunct populations were located in 2002 (BirdLife International 2006). However, the Brazilian merganser remains close to extinction and the IUCN categorizes the species as Critically Endangered (IUCN 2006). The population is estimated at 50–249 individuals and the trend is decreasing (BirdLife International 2006). Threats to the species include the perturbation and pollution of rivers, which are predominately the result of deforestation, agriculture, and diamond mining in the Serra da Canastra area (Bartmann 1994 and 1996, as cited in BirdLife International 2006). Dam construction has destroyed suitable habitat, especially in Brazil and Paraguay. In Argentina, hunting and collecting specimens for exhibition are considered contributory factors to the species' decline (BirdLife International 2006). The Brazilian merganser is considered extirpated in Mato Grosso do Sul, Rio de Janeiro, Sao Paolo, and Santa Catarina (BirdLife International 2006). There is only one recent record of the species from Misiones, Argentina (Benstead 1994; Hearn 1994, as cited in Collar *et al.* 1994), and it was last recorded in Paraguay in 1984 (BirdLife International 2006). The species is legally protected in Brazil and it occurs in three Brazilian national parks (del Hoyo *et al.* 1992). The Instituto Brasileiro do Meio Ambiente e dos Recursons Naturais Renováveis (IBAMA) in Brazil has established eight committees to develop and monitor conservation strategies for specific endangered species, including the Brazilian merganser (Marinia and Garcia 2004).

This species does not represent a monotypic genus. It faces threats that are high in magnitude because the small populations are disjunct and geographically isolated, resulting in populations which are unable to exchange genetic material and, are therefore faced with the inbreeding depression common to small, endangered populations. Additionally, species with few remaining individuals are particularly vulnerable to stochastic events, such as large-scale storms that could eliminate the entire species at one time. The threats remain imminent because all of the factors contributing to the destruction of the merganser's habitat are ongoing and likely to be permanent. It therefore receives a priority rank of 2.

Cauca guan (*Penelope perspicax*)

The Cauca guan is endemic to the west slopes of the West and Central Andes (Risaralda, Quindio, Valle del Cauca, and Cauca), in Colombia (Collar *et al.* 1992). The stronghold for the species is the Ucumari Regional Park, Risaralda (BirdLife International 2006). The Cauca guan inhabits large, humid primary forests at 1,600–2,150 m (P.G.W. Salaman *in litt.* 1999 and 2000, as cited in BirdLife International 2006). Individuals have also been located at lower elevations of 900–1,600 m on exotic broadleaf tree plantations, secondary forest, and forest edge (Silva Arias 1996, as cited in BirdLife International 2006). The Cauca guan was considered fairly common at the beginning of the 20th Century, but severe habitat loss has had a major deleterious impact on the species (del Hoyo *et al.* 1994). Population estimates for the species have fallen from 1,000–2,499 individuals in 2000 (BirdLife International 2000), to a current estimate of 250–999 individuals, with a decreasing trend (BirdLife International 2006). The bird is hunted for food even in protected areas, except Ucumari (BirdLife International 2006). IUCN categorizes the species as Endangered because it has a small contracted range composed of widely fragmented patches of habitat, which are declining (IUCN 2006).

This species does not represent a monotypic genus. Habitat loss is the greatest threat to the guan, and this threat is high in magnitude and imminent because the guan now appears to be utilizing sub-optimal habitat as the result of continuing habitat destruction. The species is also hunted for food everywhere except Ucumari Regional Park. This species therefore receives a priority rank of 2.

Southern helmeted curassow (*Pauxi unicornis*)

The southern helmeted curassow is known from central Bolivia and central and eastern Peru, where it inhabits dense, humid, lower montane forest and adjacent evergreen forest at 450–1,200 m (BirdLife International 2006). This species prefers nuts of the almendrillo tree (*Byrsonima wadsworthii*) as its major source of food. It also consumes other nuts, seeds, fruit, soft plants, larvae, and insects (BirdLife International 2006). The southern helmeted curassow was previously classified as Vulnerable by IUCN; however, after further assessment, it was uplisted in 2005 to Endangered (IUCN 2006). The species is estimated to be declining very rapidly due to uncontrolled hunting and habitat destruction. It has a small range and is known from few locations in a narrow elevational band, which continues to be subject to habitat loss (IUCN 2006). The population is estimated at 10,000–19,999 birds, with a decreasing population trend (BirdLife International 2006). Field surveys in portions of its range indicate gaps in species' distribution (BirdLife International 2006). The species is often hunted for meat and its casque, or horn (BirdLife International 2006), which is used to fashion native handicrafts (Cordier 1971, as cited in Collar *et al.* 1992). Other threats to the species include forest clearing for staple and export crops, road building, and rural

development. In Peru, oil exploration threatens the species' habitat and is opening the foothills to colonization and additional hunting (BirdLife International 2006). Large parts of the southern helmeted curassow's range are protected by inclusion in the Amboro and Carrasco National Parks which protects the species from hunting and declining habitat due to development and road building (BirdLife International 2006).

The southern helmeted curassow does not represent a monotypic genus. It faces threats that are moderate in magnitude as the population is fairly large; however, the population trend has been declining rapidly. The threats to the species are imminent and ongoing. Therefore, it receives a priority rank of 8.

Blue-billed curassow (*Crax alberti*)

The blue-billed curassow historically occurred in northern Colombia, from the base of the Sierra Nevada de Santa Marta west to the Sinu Valley and south in Magdalena Valley to north Tolima (BirdLife International 2006). It inhabits humid forest up to 1,200 m, but is more common below 600 m (del Hoyo *et al.* 1994), where it feeds on fruit, shoots, invertebrates, and possibly carrion (BirdLife International 2006).

The blue-billed curassow is categorized as Critically Endangered by IUCN (IUCN 2006) and is listed in Appendix III of CITES by Colombia (CITES 2006). The species was uncommon in the Santa Marta region at the beginning of the 20th Century; it was perhaps most numerous in the humid lowlands of the north coast of Colombia (Todd and Carriker 1922, as cited in Collar *et al.* 1992). The blue-billed curassow was becoming increasingly rare during the 20th Century (Haffner 1975, as cited in Collar *et al.* 1992), and by the 1980s, the species had disappeared from a large portion of its previous range (Estudillo Lopez 1986, as cited in Collar *et al.* 1992). In 1994, the population was estimated at 1,000–2,500 birds and local reports have indicated recent and rapid declines (BirdLife International 2006). The population trend for the species continues to be decreasing due to the substantial threats it faces (BirdLife International 2006). Earlier reports indicated that outside of a few forest patches bordering national parks, the species was nearly extinct (L.M. Renjifo, Z. Calle, D. Rodriguez personal communications, as cited in Brooks and Strahl 2000). However, additional sites which are believed to harbor the species have been identified in work supported by the World Pheasant Association International (Cuervo and Salaman 1999, as cited in Brooks and Strahl 2000).

There is very little suitable foraging and nesting habitat remaining for use by the species after the rapid deforestation and logging that has occurred throughout its range. Additionally, oil extraction, gold mining, government defoliation of illegal drug crops, increased human encroachment, egg collecting, and hunting present serious threats to the survival of the blue-billed curassow, indicating it could undergo an extremely rapid population reduction over a very short time period (BirdLife International 2006). The blue-billed curassow is perhaps one of the most endangered species identified as an immediate conservation priority by the Cracid Specialist Group (Brooks and Strahl 2000). International trade in this bird may be an additional threat to survival of the species (J.V. Rodriguez personal communication, as cited in Brooks and Strahl 2000).

The blue-billed curassow does not represent a monotypic genus. The species faces significant threats that are high in magnitude. The curassow's habitat continues to be seriously degraded by processes and pollution associated with oil extraction, gold mining, and government defoliation of illegal drug crops. Increased human encroachment is resulting in the destruction of habitat as land is cleared for agricultural purposes. The species is further threatened by egg collecting and hunting, which continue unabated. The threats to the species are imminent and ongoing; extremely limited foraging and nesting habitat remains after the rapid deforestation of the area. Therefore it receives a priority rank of 2.

Cantabrian capercaillie (*Tetrao urogallus cantabricus*)

The Cantabrian capercaillie inhabits the Cantabrian Mountains of northern Spain (Storch 2000). It occupies forest and woodland habitats that consist largely of coniferous species, particularly *Pinus sylvestris*, conifers from the *Piscea* and *Abies* genera, and isolated broad-leaved deciduous tree species (BirdLife International 2006). It prefers extensive areas of old-growth shady forest that include damp soil and interspersed bogs, areas of peat or glades, and a dense undergrowth of ericaceous plants (Garcia *et al.* 2004). The IUCN currently designates the species as Endangered (IUCN 2006). The population has been estimated at 250–300 adult males, equivalent to a total population size of fewer than 1,000, but it is more likely that only 600–750 birds currently exist (A. Lucio, personal communication, as cited by Storch 2000). The Cantabrian Capercaillie Specialist Group estimates that population numbers have declined by 25–50 percent over the past 10–15 years (Storch 2000). Habitat loss, fragmentation, and degradation related to forestry and tourism, illegal hunting, and disturbance by human outdoor activities have been identified as the major causes of species' and habitat decline (J. Castroviejo, personal communication, as cited by Storch 2000). Recent studies indicate that habitat fragmentation may have a greater effect on the species than previously recognized (Suárez-Seoane and García-Rovés 2004, Garcia *et al.* 2005, Quevedo *et al.* 2005a, and Quevedo *et al.* 2005b). There are concerns that the population, as compared to other grouse populations, exhibits very low values of allelic richness and heterozygosity which are commonly observed in endangered species. Combining such genetic factors with a high level of habitat fragmentation and consistent indications of low average fledging success suggests some degree of inbreeding depression may be affecting the population (Quevedo *et al.* 2005a).

This is a subspecies that faces threats that are high in magnitude due to the low number of individual animals, extensive habitat fragmentation, and very low allelic richness and heterozygosity values which are all negative survival factors for an already declining subspecies. The threats are imminent because habitat fragmentation, which this species is particularly vulnerable to, continues, and other man-made factors such as hunting, outdoor activities, and tourism are not likely to end in the near future. It receives a priority rank of 3.

Gorgeted wood-quail (*Odontophorus strophium*)

The gorgeted wood-quail occurs on the west slope of the east Andes of Colombia in Santander and Cundinamarca (Collar *et al.* 1992). It is found on the forest floor of temperate and subtropical forests at 1,500–2,050 m, especially those dominated by *Quercus humboldtii* (del Hoyo *et al.* 1994). The gorgeted wood-quail is probably dependent on primary-growth forest for at least part of its life cycle, although it has also been found in degraded habitats and secondary-growth forest (BirdLife International 2006). Since the 17th Century, the west slope of the East Andes has been extensively logged and converted to agriculture (Stiles *et al.* 1999). Forest habitat loss below 2,500 m has been almost complete (Stattersfield *et al.* 1998), with

habitat reduced in many areas to highly fragmented relict patches on steep slopes and along streams (Stiles *et al.* 1999). The species is classified as Critically Endangered by IUCN because it has an extremely small and highly-fragmented range, with existing population records from only two locations. Hunting and logging are likely to be causing continued declines in population and range (IUCN 2006). Current population estimates range from 250 to 999 individuals and the remaining population trend is declining (BirdLife International 2006). Additionally, until 1923, the species was known only from Cundinamarca, but there have been no reports of the species from that area since 1954 (Wege and Long 1995, in BirdLife International 2006). It has been discovered in suitable habitat in several areas since 1970, and appears to be restricted to the larger oak forest remnants in the eastern Cordillera. Both remnants have decreased considerably in size during the previous two decades (J. Velasquez and N. Silva *in litt.* 2004, as cited in BirdLife International 2006). It is possible that less disturbed forests that have not been recently censused in west Boyaca and Santander may retain populations of the species (BirdLife International 2006). In November 1993, 100 km^2 of forest at Virolin was gazetted as a reserve, the Guanenta-Alto Rio Fonce Flora and Fauna Sanctuary (Andrade and Repizzo 1994), which affords the species some protection from indiscriminate hunting (BirdLife International 2006).

This species does not represent a monotypic genus. The threat to the species is high in magnitude because few individuals are interspersed over a very highly-fragmented range. The threats are imminent because hunting and forest clearing, which have serious impacts on the species, has been ongoing since the 17th Century and continues. It receives a priority rank of 2.

Junin rail (*Laterallus tuerosi*)

The Junin rail is endemic to the Andean Highlands of central Peru along the shores of Lago de Junin (BirdLife International 2006). It is known from two sites on the southwest shore of the lake, but may occur in other portions of the approximately 150 km^2 of marsh surrounding the lake. The Junin rail inhabits rush marsh vegetation bordering the lake. Details regarding habitat preference are not fully known (Fjeldså 1983, as cited in Collar *et al.* 1992); however, the rail has been observed in mosaics of *Juncus andecolus*, mosses, and low herbs in open marsh landscapes (Fjeldså 1983, as cited in BirdLife International 2006). This species is classified as Endangered by the IUCN because it has a very small range of marshland around a single lake where habitat quality is declining (IUCN 2006). The population trend is decreasing and the current population estimate for this species is 1,000–2,499 birds (BirdLife International 2006). Since 1955, Lago de Junin has been affected by pollution and human-induced water level changes, which may be adversely affecting the fringe vegetation (J. Fjeldså 1987 personal communication, as cited in Collar *et al.* 1992). Reed marsh habitat has been destroyed due to frequent periods of desiccation resulting from drought conditions which may be linked to the ENSO, unsustainable water management by Electro Peru, and occasional flooding with highly acidic water from the Cerro de Pasco mines (J. Fjeldså *in litt.* to Taylor and van Perlo 1998, as cited in BirdLife International 2006). Although the lake is a national reserve, mining and dam-building activities persist along the lake shore, further altering the Junin rail's habitat.

The Junin rail does not represent a monotypic genus. It faces threats that are high in magnitude because the species lives along the shores of one lake, and is dependent on the declining quality of the lake's habitat. The threats are imminent because water level changes and management by Electro Peru are not made with the rail's needs in mind. Furthermore, Lago de Junin is subject to perturbations resulting from the presence of ENSO, which is ongoing and is a change that cannot be controlled by man. It therefore receives a priority rank of 2.

Bogota rail (*Rallus semiplumbeus*)

The Bogota rail is found in the East Andes of Colombia on the Ubaté-Bogotá Plateau in Cundinamarca and Boyacá. It occurs in the temperate zone, at 2,500–4,000 m (occasionally as low as 2,100 m) in savanna and páramo marshes (BirdLife International 2006). This rail frequents wetland habitats with vegetation-rich shallows that are surrounded by tall, dense reeds and bulrushes. It feeds along the water's edge, in flooded pasture land, and along small overgrown dykes and ponds (Varty *et al.* 1986; Fjeldså and Krabbe 1990 as cited in BirdLife International 2006). This species is omnivorous, consuming a diet that includes aquatic invertebrates, insect larvae, worms, molluscs, dead fish, frogs, tadpoles, and plant material (Varty *et al.* 1986; BirdLife International 2006).

The Bogota rail is listed as Endangered by IUCN primarily because its range is very small and is contracting owing to widespread habitat loss and degradation. Furthermore, available habitat has become widely fragmented (IUCN 2006). The current population is estimated to range between 1,000–2,499 individuals and the trend is decreasing (BirdLife International 2006). Although the Bogota rail is declining, it is still uncommon to fairly common, with some notable populations, including nearly 400 birds at Laguna de Tota, some 50 territories at Laguna de la Herrera, approximately 110 birds at Parque La Florida, and other populations at La Conejera marsh and Laguna de Fuquene (BirdLife International 2006). Some of the birds occur in protected areas such as Chingaza National Park and Carpanta Biological Reserve. However, most savanna wetlands are virtually unprotected.

The Bogota rail does not represent a monotypic genus. It is subject to threats that are moderate in magnitude and imminent. Therefore, it receives a priority rank of 8.

Takahe (*Porphyrio hochstetteri;* Previously Referred to as *Porphyrio mantelli*)

The takahe is endemic to New Zealand and is the world's largest extant member of the rail family (del Hoyo *et al.* 1996). The species, *Porphyrio mantelli*, has been split into *P. mantelli* (extinct) and *P. hochstetteri* (extant) (Trewick 1996, as cited in BirdLife International 2006). BirdLife International (2000) incorrectly assigned the name *P. mantelli* to the extant form, while the name *P. hochstetteri* was incorrectly assigned to the extinct form. Fossils indicate that this bird was once widespread throughout the North and South Islands. However, when the species was rediscovered in 1948, it was confined to the Murchison Mountains in Fjordland (BirdLife International 2000). Originally, the species preferred forest and grass ecosystems; it is now limited to alpine tussock grasslands on the mainland and feeds primarily on juices from the bases of snow tussock and the rhizome of a fern species (BirdLife International 2006). The takahe is listed as Endangered by the IUCN because it has an extremely small population (IUCN 2006). The main cause of the species' decline has been competition for tussocks by grazing red deer, *Cervus elaphus*, which were introduced after the 1940s (BirdLife International 2006). Grazing also highly modified the habitat (del Hoyo *et al.* 1996). Predation by introduced stoats, *Mustela erminea* is

also believed to be a significant threat to the species (BirdLife International 2006). Other potential competitors or predators include the introduced brush-tailed possum, *Trichosurus vulpecula*, and the threatened weka, *Gallirallus australis* (New Zealand Department of Conservation 1997). Since the 1980s, the population has fluctuated between 100–160 birds (Maxwell in press, as cited in BirdLife International 2006). Populations have been established on four predator-free offshore islands—Kapiti, Mana, Tiritiri Matangi, and Maud-using birds that were translocated between 1984 and 1991 (BirdLife International 2006). Red deer have been controlled in the Murchison Mountains since the 1960s (BirdLife International 2006). Overall, population numbers are slowly increasing due to intensive management of the island populations, but fluctuations in the remnant mainland population continue to occur (IUCN 2006). Captive-breeding efforts have increased the rate of survival to one year of age from 50 percent to 90 percent (BirdLife International 2006). However, Takahe that have been translocated to the islands have higher rates of egg infertility and low hatching success, contributing to the slow increase in the islands populations. Researchers postulated that the difference in vegetation between the native mainland grassland tussocks and that found on the islands might be affecting reproductive success. After testing nutrients from all available food sources, they concluded that there was no effect, and advised that a supplementary feeding program for the birds was not necessary or recommended (Jamieson 2003).

There are grave concerns about inbreeding effects within this small population. Jamieson (2006) suggests that limiting the potential effects of inbreeding and loss of genetic variation should be integral to any management plan for a small, isolated, highly-inbred island species, such as the takahe. Failure to address these concerns may result in reduced fitness potential and much higher susceptibility to biotic and abiotic disturbances in the short term and an inability to adapt to environmental change in the long term (Jamieson *et al.* 2006).

The takahe does not represent a monotypic genus. It faces threats that are moderate in magnitude and imminent. Therefore, it receives a priority rank of 8.

Chatham oystercatcher (*Haematopus chathamensis*)

The Chatham oystercatcher is endemic to the Chatham Islands, New Zealand (BirdLife International 2006). It prefers rocky shores, sand or gravel beaches, and nests in scrapes on the shore away from the waterline (F.A. Schmechel *in litt.* 1999, as cited in BirdLife International 2006). This species is classified as Endangered by the IUCN because it has an extremely small population (IUCN 2006). In 1988, based on past productivity information, it was feared that the species was at risk of extinction within 50–70 years (Davis 1988, as cited in Schmechel and Paterson 2005). Although the population is now slowly increasing due to intervention and management of the species (the Chatham Island group), population sizes can fluctuate as the result of stochastic events, with numbers on one island undergoing a long term decline (IUCN 2006). The total population has increased from approximately 50 birds in the early 1970s to 100–110 birds during the breeding season of 1987–1988, which included 44 breeding pairs (del Hoyo *et al.* 1996). A census conducted in 1998 revealed 140–150 birds, which represented a significant increase in total population size (BirdLife International 2006). In 2004, 266 birds were counted on the four islands in the Chatham group, representing an estimated population size of 310–325 birds (Moore 2005, as cited in BirdLife International 2006). However, the population on South East Island has gradually declined since the 1970s (Schmechel and O'Connor 1999, as cited in BirdLife International 2006). Introduced predators, as well as cattle and sheep, are a major threat on Pitt and Chatham Islands (B.D. Bell *in litt.* as cited in BirdLife International 2006). South East and Mangere Islands are free of mammalian predators, but oystercatcher populations are highly variable, and the reason for the decline occurring on South East Island is unknown (Schmechel and O'Connor 1999, as cited in BirdLife International 2006). The birds of the Chatham Island group are protected due to human intervention and management. Nest manipulation, fencing, signage, intensive predator control, and a research program aimed at assessing the effects of predators, flooding, and management on breeding success have been underway for several years (BirdLife International 2006).

The Chatham oystercatcher does not represent a monotypic genus. It faces threats that are moderate in magnitude and imminent, and therefore it receives a priority rank of 8.

Jerdon's courser (*Rhinoptilus bitorquatus*; previously referred to as *Cursorius bitorquatus*)

The Jerdon's courser is a rare local endemic in southern India, where it is principally found in the Eastern Ghats of southern Andhra Pradesh and extreme southern Madhya Pradesh (BirdLife International 2006). Historically, the species was also located in the Pennar and Godaveri River valleys (Ripley and Beehler 1989; Ali and Ripley 1968–1998, as cited in BirdLife International 2006). It prefers sparse, thorny areas dominated by *Acacia*, *Zizyphus*, and *Carissa* (BirdLife International 2006). The courser may also inhabit scrub-forest consisting of *Cassia*, *Hardwickia*, *Dalbergia*, *Butea*, and *Anogeissus*, interspersed with patches of bare ground, in gently undulating rocky foothills (BirdLife International 2006). Historically, the courser was known from just a few records and assumed to be extinct until 1986, when it was rediscovered around Lankamalai (BirdLife International 2006).

Jerdon's courser is listed as Critically Endangered by the IUCN because it is a poorly-known species consisting of a single small, declining population (IUCN 2006). Threats include: exploitation of the scrub-forest, livestock grazing, disturbance by humans and livestock, and rock quarrying (IUCN 2006). Habitat modeling has shown that it is possible to ascertain an optimal level of grazing and woodcutting that would maintain or create suitable conditions for the species; however, additional study is necessary (Jeganathan *et al.* 2004). The population estimate for this species is 50–249 birds, with a decreasing population trend (BirdLife International 2006). Very few individuals have been recorded so far, mainly due to the species' nocturnal and retiring habits (BirdLife International 2006). Members of the Yanaadi community, who played a major role in the rediscovery of the species, were employed by the State Forest Department to locate individuals in other localities and habitats in the Eastern Ghats, but the results of this search remain unknown (Bhushan 1995, as cited in BirdLife International 2006).

Jerdon's courser does not represent a monotypic genus. The current threat to the species is high because there is only one small population in existence with a declining population trend and the species' historic range has diminished. Threats to the species are imminent because it is highly susceptible to human disturbance and livestock

grazing which are ongoing; therefore, it receives a priority rank of 2.

Slender-billed curlew (*Numenius tenuirostris*)

The slender-billed curlew migrates along a west-southwest route from Siberia through central and eastern Europe (predominantly Russia, Kazakhstan, Ukraine, Bulgaria, Hungary, Romania, and Yugoslavia) to southern Europe (Greece, Italy, and Turkey) and North Africa (Algeria, Morocco, and Tunisia) (BirdLife International 2006). The only confirmed observations of breeding activity were made between 1914 and 1924, near Tara, north of Omsk, in Siberia, Russia (del Hoyo *et al.* 1996). The few nests that were located at that time were found on the northern limit of the forest-steppe zone in habitat more typical of taiga marsh (BirdLife International 2006). During winter migration the curlew utilizes a wide variety of habitats, including steppe grassland, marshland, salt pans, brackish lagoons and wetlands, tidal mudflats, fish ponds, semi-desert, and sandy farmland near lagoons (BirdLife International 2006).

During the 19th Century, the slender-billed curlew was regarded as very common, but the species declined quite rapidly during the 20th Century (BirdLife International 2006). The IUCN designates the species as Critically Endangered because it has an extremely small population, the number of birds recorded annually continues to decline, and the population trend is continuing to decrease (IUCN 2006). The slender-billed curlew is listed in CITES Appendix I (CITES 2006). As recently as the 1960s and 1970s, flocks of more than 100 birds were recorded in Morocco (BirdLife International 2006). However, during the 1980s, only 103 observations were confirmed, totaling between 316 and 326 birds. The population continued to decline rapidly and by 1994, the population was estimated to range between 50–270 birds, and current records suggest it may now be lower. Sporadic sightings of 1–3 birds are reported now and then, with the exception of a flock of 19 birds in Italy in 1995 (BirdLife International 2006).

Historically, hunting levels have been high along the species' entire migratory flyway, but reports of hunting seemed to be the highest in Russia. Hunting is believed to be the primary factor for the species' decline (BirdLife International 2006). The likelihood of threats to the breeding grounds has not been adequately assessed because the location of breeding and moulting areas is unknown to date (BirdLife International 2006). It has been suggested that the species' breeding areas might have been located in the steppe zone, which has been cultivated on a large scale, perhaps contributing to the rapid decline of the species (del Hoyo *et al.* 1996). Extensive draining of wetlands in North Africa, Iraq, and the entire Mediterranean Sea region has had a deleterious affect on this species, and many other wading bird species in Eurasia (BirdLife International 2006).

The slender-billed curlew does not represent a monotypic genus. The magnitude of threat to the species is high and imminent because the major threats, hunting and habitat loss, are ongoing. Although there has been no actual change in threats since we published our last Notice, habitat loss represents an ongoing and imminent threat to the slender-billed curlew. Therefore, to ensure consistency in the application of our listing priority guidance, we changed the listing priority number from 5 to 2 to reflect that the threats are imminent. Therefore, the priority rank for this species is 2.

Marquesan imperial-pigeon (*Ducula galeata*)

The Marquesan imperial-pigeon is endemic to Nuku Hiva in the Marquesas Islands, French Polynesia. The species prefers remote wooded valleys from 250 to 1,300 m in elevation in the west and north of the island. It also inhabits secondary forest and edge habitat near banana and orange plantations (Holyoak and Thibault 1984, as cited in BirdLife International 2006). The Marquesan imperial-pigeon is categorized as Critically Endangered by IUCN because it has a very small population on one diminutive island in an isolated volcanic island chain in the south Pacific (IUCN 2006).

Nuku Hiva was previously nearly inaccessible to hunters, introduced grazers, and rats because of its remote location. However, the local habitat has recently been modified and degraded by introduced vegetation and grazing by feral livestock (Evva 1998; Seitre and Seitre 1991, 1992; as cited in BirdLife International 2006). Fortunately for the species, the cattle have been eradicated, and the number of goats and pigs are decreasing (Evva 1998, as cited in BirdLife International 2006). Illegal hunting is one of two serious threats to the species (Evva 1998, as cited in BirdLife International 2006). The other threat is believed to come from a rapidly increasing introduced black rat (*Rattus rattus*) population which preys on eggs and the young of the species (Seitre and Seitre 1991, 1992; as cited in BirdLife International 2006).

Holyoak and Thibault (1984) estimated a population of 200–400 birds in 1975. In 1998, a maximum of 85 birds were located and the population was estimated at approximately 250 individuals (Evva 1998, as cited in BirdLife International 2006).

The Marquesan imperial-pigeon does not represent a monotypic genus. It faces threats that are high in magnitude because it is confined to one small island population which is extremely vulnerable to typhoons and volcanic eruption, stochastic events that could extirpate the entire species during one event. The threats to the species are imminent because there are no known controls on hunting, nor is there a rat eradication program that we are aware of; hence, these threats remain and are ongoing. Therefore, it receives a priority rank of 2.

Salmon-crested cockatoo (*Cacatua moluccensis*)

The salmon-crested cockatoo is endemic to the islands of Ambon, Haruku, Seram, Saparua and South Maluku, Indonesia. Currently, the species is believed to survive in one area on Ambon, while the remaining population lives on Seram. There are no recent records of the species on Haruku and Saparua (BirdLife International 2006). Lowland rain forest below 1,000 m in elevation and unlogged lowland forest below 300 m are the most productive habitat for the species (Marsden 1998). Studies conducted in 1998 suggested that habitat rich in strangler fig trees and *Octomeles sumatranus*, the tree species the cockatoos prefer for nesting, were also likely to produce the highest densities of cockatoos, but these studies need confirmation (Kinnaird *et al.* in prep., as cited in BirdLife International 2006). The diet of salmon-crested cockatoos consists of seeds, nuts, coconuts, berries, and insects and their larvae (Forshaw 1989).

The salmon-crested cockatoo was formerly a common species of the lowlands within its range (del Hoyo *et al.* 1997). This species is one of three threatened members of the suite of 14 bird species that are entirely restricted to the Seram Endemic Bird Area (BirdLife International 2006). The IUCN lists the species as Vulnerable (IUCN 2006), and current populations are estimated at 62,400 individuals with a decreasing population trend (BirdLife International 2006).

By the 1980s, salmon-crested cockatoo populations were declining rapidly due to uncontrolled trapping for the caged-bird trade (BirdLife International 2006). Concerns about

unrestricted trade of the species led to a CITES Appendix-II listing in 1981 (CITES 2006). After the CITES listing, some 74,509 individual salmon-crested cockatoos were exported from Indonesia from 1981–1990 (BirdLife International 2000). The level of imports from Indonesia from 1983–1988, as reported to CITES, averaged 9,571 birds per year (Marsden 1995, as cited in BirdLife International 2001). Considering unrecorded and undocumented international trade, domestic trade, and natural mortality, it is estimated that at least 10,000 birds were being removed from the Seram population annually during the 1980s (Kinnaird *et al.* [in prep.], as cited in BirdLife International 2001). In October 1989, the salmon-crested cockatoo was transferred to CITES Appendix-I. The change in listing status resulted in a decrease of legally traded birds to zero; however the domestic market remains high (BirdLife International 2006). Interviews in villages suggest that perhaps as many as 4,000 birds are still being captured each year (Kinnaird 1999, as cited in BirdLife International 2001).

In addition to the caged-bird trade, forest loss, ongoing habitat degradation and fragmentation resulting from timber extraction, human settlement, and hydroelectric power projects are additional threats to the species (BirdLife International 2006). In 2000, a program was launched to promote ecotourism which was linked to a local project to raise awareness about the plight of the salmon-crested cockatoo. The income produced through the ecotourism program was another incentive to protect and conserve the cockatoos (BirdLife International 2000). Current conservation measures suggest continuing and expanding the awareness program and using the salmon-crested cockatoo as the island's flagship species to reduce trapping pressure and encourage local support for the survival of the species (BirdLife International 2006).

The salmon-crested cockatoo does not represent a monotypic genus. It faces threats that are high in magnitude. Despite measures taken by CITES to reduce international trade of the species by transferring the cockatoo to Appendix I, trapping for the domestic pet market continues unabated. Ongoing habitat loss and degradation threaten the survival of the species, rendering these threats imminent and ongoing. Therefore, we have assigned the species a priority rank of 2.

Orange-fronted parakeet (*Cyanoramphus malherbi*)

The orange-fronted parakeet was treated as an individual species until it was proposed to be a color morph of *C. auriceps* in 1974 (Holyoak 1974, as cited in Snyder *et al.* 2000). Further taxonomic analysis suggests that it should once again be considered as a distinct species (Triggs and Daugherty 1996; Juniper and Parr 1998; ITIS 2006). Species' distribution during the 19th Century was limited to New Zealand and several offshore islands, including Three Kings, Hen, Big Chicken, Little Barrier, Great Barrier (rare), Kapiti (rare), the Chetwolde Islands, Stewart Island and satellite islets, Codfish, Solander, Ruapuke, and the Auckland Islands including Adams Island (Juniper and Parr 1998). The parakeet was previously believed to be most common on off-shore islands where predation by introduced animals was less prevalent than on mainland New Zealand (Juniper and Parr 1998). Currently, there are three remnant populations, all located within a 30 km radius in Arthur's Pass National Park and Lake Sumner Forest Park (New Zealand Department of Conservation [NZDOC] 2006). This species inhabits southern beech (*Nothofagus* spp.) forest (BirdLife International 2000; NZDOC 2006), with a preference for locales bordering stands of mountain beech (*N. solandri*) (Snyder *et al.* 2000). It requires mature trees with natural hollows or cavities for nesting, and breeding is linked with the irregular seed production by *Nothofagus* (BirdLife International 2000).

The orange-fronted parakeet has an extremely small population and limited range. There have only been a few sightings since 1966 (Triggs and Daugherty 1996), and previous assessments of its status have ranged from more common than originally thought (Harrison 1970) to near extinction (Mills and Williams 1980). The IUCN classifies the species as Critically Endangered (IUCN 2006) and it is listed in Appendix II of CITES (CITES 2006). The New Zealand Department of Conservation (NZDOC) (2006) considers the orange-fronted parakeet, or käkäriki, to be the rarest parakeet in New Zealand and because it is classified as ''Nationally Critical'' with a high risk of extinction NZDOC has been working intensively with the species to ensure its survival. The population is estimated at 100–200 individuals in the wild and declining (NZDOC 2006). There are several reasons for the species' decline; the most significant threats is predation by introduced species such as the brush-tailed possum (*Trichosurus vulpecula*), stoats (*Mustela erminea*), and rats (*Rattus* spp.) (BirdLife International 2006). The NZDOC introduced ''Operation ARK'', an initiative to respond to predator problems in beech forests to prevent species extinctions, including orange-fronted parakeets. Predators are methodically controlled with traps, toxins in bait stations, bait bags, and aerial spraying, as necessary.

Hybridization with yellow-crowned parakeets (*C. auriceps*) has been observed at Lake Sumner (Snyder *et al.* 2000; Kearvell *et al.* 2002). Increased competition between the yellow-crowned parakeet and the orange-crowned parakeet in a habitat substantially modified by humans, competition with introduced finch species, and competition with wasp species for invertebrates as a dietary source are considered other threats to the species (Kearvell *et al.* 2002).

The NZDOC closely monitors all known populations of the orange-fronted parakeet. With such a limited population, NZDOC focuses the species program on monitoring the breeding of the wild population and captive-breeding efforts. Nest searches are conducted, nest holes are inspected, and surveys are carried out in other areas to look for evidence of other populations. In May 2003, surveys successfully located an additional orange-fronted parakeet population, and identified a new population in 2006 on the predator-free Chalky Island. NZDOC officials remove eggs from nests on the island so that foster parakeet parents could incubate the eggs and care for the hatchlings until they fledged. The juvenile birds were then transferred back to the island. Monitoring of these birds later in 2006 indicated that they had successfully nested and reared chicks. Additional birds will be added to Chalky Island to augment the population and to increase its genetic diversity.

The orange-fronted parakeet does not represent a monotypic genus. The current population ranges between 100 and 200 individuals, and the species' distribution has become limited. However, it faces threats that are moderate in magnitude because the NZDOC has taken important measures to aid in the recovery of the species. NZDOC implemented a successful captive-breeding program for the orange-fronted parakeet. Using captive-bred birds from the program, NZDOC established a population of the orange-fronted parakeet on a predator-free island (Chalky Island). Individuals from this population have successfully reproduced and reared young. The

NZDOC monitors wild nest sites, and is constantly looking for new nests and new populations, as evidenced by the 2003 discovery of a new population. The NZDOC recognizes that the most significant threat to the species is predation, and has initiated a successful program to remove predators. The threats of hybridization, competition for food, and highly altered habitat are imminent as they are ongoing. Therefore, this species is assigned a priority rank of 4.

Uvea parakeet (*Eunymphicus uvaeensis*)

This species was previously known as *Eunymphicus cornutus*, but was split into *E. cornutus* and *E. uvaeensis* following the treatment by Juniper and Parr (1998) (BirdLife International 2006). The Uvea parakeet is restricted to Uvea, New Caledonia. It is found primarily in forest habitat, notably, those dominated by *Agathis* and *Araucaria* and general woodlands, and feeds on the berries of vines and the flowers and seeds of native trees and shrubs (del Hoyo *et al.* 1997). The species is restricted to areas of old-growth forest with nesting holes, but the greatest number of birds occurs close to gardens with papayas which they can utilize as a food source (BirdLife International 2006).

Early population estimates were alarmingly low; 70–90 birds and declining (Hahn 1993). Surveys in 1993 yielded estimates of approximately 600 birds, and in 1998 some 750 birds were located (P. Primot, *in litt.* 1999, as cited in BirdLife International 2006). In 1999, it was believed that 742 individuals lived in northern Uvea, with 82 birds living in the south (Primot 1999, as cited in BirdLife International 2006). The IUCN classifies the species as Endangered because it occupies a very small, declining area of forest on one small island (IUCN 2006). The species was uplisted from Appendix II to Appendix I of CITES in July 2000, due to unsustainable trade of the species (CITES 2006). Habitat destruction during the last 30 years has caused a 30 to 50 percent decline in primary forest. The species is also threatened by the illegal pet trade, mainly for the domestic market (BirdLife International 2006). Nesting holes are cut open to extract nestlings, which render the holes unsuitable for future nesting. The increasing lack of nesting sites is believed to be a limiting factor for the species (BirdLife International 2006). Predation is also a threat to the survival of the species. Juveniles are taken by predators such as the native brown goshawk (*Accipiter fasciatus*). Introductions of the species to the adjacent island of Lifou in 1925 and 1963 failed (BirdLife International 2006), possibly due to the presence of ship rats and Norwegian rats (*Rattus norvegicus*) (Snyder *et al.* 2000).

A recovery plan for the Uvea parakeet was prepared for the period 1997–2002, which included strong local participation in population and habitat monitoring (Snyder *et al.* 2000). The species has recently increased in popularity and is celebrated as an island emblem (Robinet and Salas 1997; BirdLife International 2006). Increased awareness of the plight of the species and improvements in law enforcement capability are helping to address illegal trade of the species. In 1998, a captive-breeding program was initiated to restock the southern portion of Uvea. Measures are now being taken to control predators and prevent further colonization by rats (BirdLife International 2006). Current Uvea parakeet numbers are increasing, but any relaxation of conservation efforts or introduction of rats or other predators could lead to a rapid decline of the species (IUCN 2006).

The Uvea parakeet does not represent a monotypic genus. It faces threats that are moderate because important management efforts have been put in place to aid in the recovery of the species. However, all of these efforts must continue to function, because this species is an island endemic with restricted habitat in one location. Threats to the species are imminent because illegal trade still occurs, and the removal of 30 to 50 percent of the old growth forest which the birds are dependent upon for nesting holes negatively impacts the reproductive requirements of the species. We assign this species a priority rank of 8.

Blue-throated macaw (*Ara glaucogularis*)

The blue-throated macaw is endemic to forest islands in the seasonally flooded Beni Lowlands (Lanos de Moxos) of Central Bolivia (Jordan and Munn 1993). It inhabits a mosaic of seasonally inundated savanna, palm groves, forest islands, and humid lowlands. This species is found in areas where palm-fruit food is available, especially *Attalea phalerata* (Hesse 1998, as cited in BirdLife International 2000). It inhabits elevations between 200 and 250 m (BirdLife International 2000). These macaws are not found to congregate in large flocks; but are seen most commonly traveling in pairs, and on rare occasions may be found in small flocks of up to five individuals (Collar *et al.* 1992). The blue-throated macaw nests between November and March in large tree cavities where one to two young are raised (BirdLife International 2000).

The taxonomic status of this species was long disputed, primarily because the species was unknown in the wild to biologists until 1992 (del Hoyo *et al.* 1997). Trappers apparently discovered the species sometime during the late 1970s or early 1980s. Between the early 1980s and early 1990s, approximately 400–1,200 birds were exported from Bolivia, and many are now in captivity in the European Union and in North America (World Parrot Trust 2003). This species is severely threatened by previous trapping for the national and international cage-bird trade. Recent estimates indicate that there are between 75 and 150 individuals in the wild (Snyder *et al.* 2000). This species is categorized as Critically Endangered by the IUCN and is listed in Appendix I of CITES (IUCN 2006; CITES 2006). The species is legally protected in Bolivia (Juniper and Parr 1998). The Eco Bolivia Foundation patrols existing macaw habitat by foot and motorbike, and the Armonia Association of Santa Cruz is searching the Beni lowlands for more populations. Additionally, the Armonia Association is building an awareness campaign aimed at the cattlemen's association to ensure that these birds are not hunted by trappers on their property (Snyder *et al.* 2000).

The blue-throated macaw does not represent a monotypic genus. It faces threats that are moderate because wild birds are no longer taken for the legal wild-bird trade as a result of the species' CITES listing, and it is also legally protected in Bolivia. Wildlife managers in Bolivia are actively protecting the species and searching for additional populations. Threats to the species are imminent and ongoing because hunters still trap the birds for the illegal bird trade. We assigned this species a priority rank of 8.

Southeastern rufous-vented ground cuckoo (*Neomorphus geoffroyi dulcis*)

The southeastern rufous-vented ground cuckoo is a subspecies found in southeastern Brazil from Espirito Santo to Rio de Janeiro (del Hoyo *et al.* 1997). It is found in tropical lowland evergreen forests, where it feeds on large insects, scorpions, centipedes, spiders, small frogs, lizards, and occasionally seeds and fruit (del Hoyo *et al.* 1997). The subspecies is not globally threatened, although populations of ground cuckoos in southern Brazil appear to be under threat due to continuing deforestation (del Hoyo *et al.* 1997). It is a rare, local, solitary subspecies that is dependent upon large blocks of undisturbed forest

(del Hoyo *et al.* 1997). This extremely timid species is among the first to disappear if its primary forest habitat is altered, and in southeastern Brazil where it occurs, most of this type of forest has been destroyed (IUCN 1978–1979). It is poorly known, has a small range, and is highly sensitive to human disturbance (BirdLife International 2001). This subspecies is protected under Brazilian law (IUCN 1978–1979).

The threats to the subspecies are high in magnitude because human disturbance and habitat destruction are ongoing and constitute highly significant impacts on the cuckoo's survival. The subspecies is dependent upon large blocks of undisturbed forest habitat for its life-cycle requirements, and habitat destruction within the cuckoo's range results in a patchy landscape, reducing the availability of the type of forest habitat necessary for the subspecies. It therefore receives a priority rank of 3.

Margaretta's hermit (*Phaethornis malaris margarettae;* Previously Referred to as *Phaethornis margarettae*)

Margaretta's hermit was first described as a new species in 1972 by A. Ruschi (Sibley and Monroe 1990). Current taxonomic studies place Margaretta's hermit as a subspecies of the great-billed hermit (*Phaethornis malaris*) (Sick 1993), which is not considered globally threatened. This subspecies is found in the understory of inundated lowland forest, secondary growth, bamboo thickets, and shrubbery. Margaretta's hermit is found in coastal East Brazil and is limited to forest remnants; consequently, further habitat destruction is a threat to the subspecies (del Hoyo *et al.* 1999). The Margaretta's hermit is listed in Appendix II of CITES (CITES 2006).

Habitat destruction is a significant threat to Margaretta's hermit that is high in magnitude and imminent because it is ongoing and likely permanent due to the high pressure for coastal development in the area. Therefore, we assign the subspecies a priority rank of 3.

Black-breasted puffleg (*Eriocnemis nigrivestis*)

The black-breasted puffleg is now confined to the northern ridge crests of Volcan Pichincha and Volcan Atacazo, in Pichincha Province, northwest Ecuador (BirdLife International 2000). In 1983, there was a possible sighting of the species at Loma Gramalote on Pichincha, and an additional three individuals were located in 1993 at the same location (Collar *et al.* 1992, Krabb *et al.* 1994a; as cited in IUCN Red List 1996). The species occurs in dwarf, humid elfin forest and paramo, at 3,100–4,500 m, from November through January and in humid temperate forest at about 2,400 m during the rest of the year (Philips 1989).

There are over 100 museum specimens of this species, suggesting it was more common in the past (Philips 1989). Between 1950 and 1993, the only confirmed sighting of the species was three individuals in 1980 (BirdLife International 2000). Recent fieldwork targeting the species has produced a few additional records, but it is clearly rare within a very limited range (Philips 1989). The population estimate for the species is 50–249 birds, with a decreasing population trend (BirdLife International 2006). This species is classified as Critically Endangered in the 2006 IUCN Red List and is listed in Appendix II of CITES (IUCN 2006; CITES 2006). It qualifies as Critically Endangered because it has an extremely small range and the population is restricted to one location where habitat is being rapidly converted and there is ongoing volcanic activity (BirdLife International 2006). The main threat to the species is conversion of trees in the elfin forest to charcoal, although media coverage of the species has encouraged authorities to control access to the forest and forbid charcoal production (Philips 1989). Potato cultivation and livestock grazing on ridge crests rapidly destroyed suitable habitat in these areas (Philips 1989). Some ridges are almost completely devoid of natural vegetation, and even if black-breasted pufflegs still occur in these areas, their numbers are most likely quite low (BirdLife International 2000). Recently, however, the Jocotoco Foundation has established the Yanacocha Reserve on the slopes of Volcan Pichincha, protecting 960 hectares of *Polylepis* woodland, as well as the entire range of the black-breasted puffleg in an effort to protect and conserve the species, which has become the ''Emblem of the City of Quito'' (WorldLand Trust 2005). The area will be managed by the Corporación Ornitológica de Ecuador (Ornithological Corporation of Ecuador, CECIA), a conservation organization which will also manage ecotourism, environmental education, and conservation initiatives including restoration of the *Polylepis* woodland (Foundacion Jocotoco 2005).

The black-breasted puffleg does not represent a monotypic genus. The long-term loss of habitat is the most significant threat to the species as loss of the species' elfin forest habitat to charcoal production and conversion to agriculture are ongoing. This threat is high in magnitude and imminent because it is ongoing. Therefore, it receives a priority rank of 2.

Chilean woodstar (*Eulidia yarrellii*)

The Chilean woodstar is restricted to a very small area on the Pacific coast from Tacna, Peru, to extreme northern Antofagasta, Chile (Collar *et al.* 1992). It is only known to regularly breed in the Lluta and Azapa valleys, Arica Department, in extreme northern Chile (BirdLife International 2000). It inhabits desert river valleys and gardens, mainly from sea level to about 750 m (Collar *et al.*, 1992). The Chilean woodstar is usually a solitary feeder and has been reported feeding in gardens on *Lantana* and *Hibiscus* flowers (Collar *et al.* 1992), but it is comparatively rare in such habitats (Howell and Webb in prep., as cited in BirdLife International 2000).

The Chilean woodstar was reported to be common at the beginning of the 20th Century (Collar *et al.* 1992). More recently, surveys have found this species to be scarce to locally common (Howell and Webb in prep., as cited in BirdLife International 2000). It is unclear whether this represents a serious decline or previous observers did not identify flowering trees favored by this species (BirdLife International 2000). Indigenous plants favored by the Chilean woodstar may be severely threatened by agriculture (Collar *et al.* 1992). The population is estimated at 2,500–10,000 birds, with a decreasing population trend (BirdLife International 2000). The IUCN classifies the species as Endangered because it has a very small range, and all populations are confined to remnant habitat patches in two desert valleys. The desert valleys are heavily cultivated (IUCN 2006). The extent, area, and quality of suitable habitat are believed to be declining as a result of human encroachment (Collar *et al.* 1992). The Chilean woodstar is listed in Appendix II of CITES. All exports of hummingbirds from Peru and Chile are controlled (BirdLife International 2000).

The Chilean woodstar represents a monotypic genus. It faces threats that are high in magnitude because indigenous food sources utilized by the species are believed to be severely threatened by agricultural development. Furthermore, the species' range has been severely reduced due to human activity; all populations are now confined to remnant habitat patches in two desert valleys. The species' habitat continues to decline due to human encroachment. Although there has been no actual change in threats since our last Notice was published, habitat loss represents an ongoing and imminent threat to the Chilean woodstar.

Therefore, to ensure consistency in the application of our listing priority guidance, we changed the listing priority number from 4 to 2 to reflect that the threats are imminent. Therefore, we assign the species a rank of 2.

Esmeraldas woodstar (*Acestrura berlepschi*)

The Esmeraldas woodstar is restricted to a small area on the Pacific Slope of the Andes of western Ecuador (Esmeraldas, Manabi, and Guayas), where only very rare and localized populations are found (BirdLife International 2000). The woodstar generally prefers lowland, moist forest habitat (del Hoyo *et al.* 1999). It has also been recorded in the canopy of semi-humid secondary growth at 50–150 m in December through March, when it is believed to breed (Becker *et al.* 2000). The species has not been recorded in this habitat type at other times of year, and there is no evidence concerning its long-term ability to survive in this type of forest habitat (BirdLife International 2000).

The Esmeraldas woodstar inhabits one of the most threatened forest habitats within the Neotropics (del Hoyo *et al.* 1999). All forest types within the species' range have diminished rapidly due to logging and clearing for agriculture (Dodson and Gentry 1991, as cited in BirdLife International 2000). This species is classified as Endangered by the IUCN. The woodstar inhabits a very small and severely fragmented range, which is decreasing rapidly in size. Ongoing declines in the bird's population are linked to persistent habitat destruction (IUCN 2006). The species is listed in Appendix II of CITES (CITES 2006). The current population estimate for this species is 1,000–2,499 birds with a decreasing population trend (BirdLife International 2000). Persistent grazing by goats and cattle is a serious threat to the species because they damage the understory and prevent regeneration of the forest that this species utilizes (Dodson and Gentry 1991, as cited in BirdLife International 2000). Dodson and Gentry (1991) indicated that rapid habitat loss is continuing, at least in unprotected areas, and extant forests will soon be eliminated. In Manabi Province, the Esmeraldas woodstar occurs in Machalilla National Park (Collar *et al.* 1992), but it does not receive adequate protection because its habitat is threatened by illegal settlement, deforestation, livestock-grazing, and habitat clearance by people with land rights (BirdLife International 2004).

The Esmeraldas woodstar does not represent a monotypic genus; however, it faces threats that significantly impact the species and are high in magnitude. These threats include persistent habitat destruction due to logging and clearing for agriculture. The species' range is decreasing rapidly, resulting in a very small and severely fragmented area available for the species. These threats are therefore imminent and ongoing, and likely to persist because the habitat on which the woodstar is dependent has been severely altered by human disturbance and is unable to regenerate due to the presence of grazing animals. Therefore, the species receives a priority rank of 2.

Helmeted woodpecker (*Dryocopus galeatus*)

The helmeted woodpecker is endemic to the southern Atlantic forest region of southeastern Brazil, eastern Paraguay, and northeastern Argentina (BirdLife International 2001). It is found in tall lowland and montane primary forest, in forest that has been selectively logged, and generally near large tracts of intact forest (BirdLife International 2001). This woodpecker feeds on beetle larvae which live beneath tree bark. The species forages primarily in the middle canopy of the forest interior (del Hoyo *et al.* 2002).

Recent field work on the helmeted woodpecker revealed that the species is less rare than once thought (BirdLife International 2000). It is listed as Vulnerable by the IUCN (IUCN 2006). The current population is estimated at no more than 10,000 individuals and decreasing (BirdLife International 2000). The greatest threat to the species is widespread deforestation. Numerous sightings since the mid-1980s includes a pair in the Brazilian State of Santa Catarina in 1998, where the species had not been seen since 1946 (del Hoyo *et al.* 2002). The helmeted woodpecker is protected by Brazilian law and populations occur in numerous protected areas throughout its range (BirdLife International 2000). Further studies are needed to clarify species distribution and status (del Hoyo *et al.* 2002).

The helmeted woodpecker does not represent a monotypic genus. The magnitude of threat to the species is moderate because the population is much larger than previously thought and imminent because the forest habitat which the species is dependent upon is constantly being altered by man. It therefore receives a priority rank of 8.

Okinawa woodpecker (*Dendrocopos noguchii*), Previously Known as (*Sapheopipo noguchii*)

The Okinawa woodpecker lives in the northern hills of Okinawa Island, Japan. Okinawa is the largest island of the Ryukyus Islands, a small island chain located between Japan and Taiwan (Winkler *et al.* 2005). This species is confined to Kunigami-gun, or Yambaru, with its main breeding areas located along the mountain ridges between Mt. Nishime-take and Mt. Iyu-take (BirdLife International 2006). It prefers mature, subtropical evergreen broadleaf forests, with tall trees greater than 20 cm in diameter (Research Center, Wild Bird Society of Japan 1993, as cited in BirdLife International 2001). Trees of this size are generally more than 30 years old and are confined to hilltops (Brazil 1991). The Okinawa woodpecker feeds on large arthropods, notably beetle larvae, spiders, moths, and centipedes, fruit, berries, seeds, acorns, and other nuts (Winkler *et al.* 2005). They forage in old-growth forests with large, often moribund trees, accumulated fallen trees, rotting stumps, debris, and undergrowth (Short 1993, as cited in BirdLife International 2001). This woodpecker often nests in hollow *Castanopsis cuspidata* trees (Research Center, Wild Bird Society of Japan 1993, as cited in BirdLife International 2001).

Prior to the rediscovery of the once-believed extinct ivory-billed woodpecker in Arkansas' Cache River National Wildlife Refuge in 2005 (USFWS 2005), the Okinawa woodpecker was considered the world's rarest extant woodpecker species (Winkler *et al.* 2005). The IUCN categorizes the species as Critically Endangered because it is comprised of a single diminutive, declining population, which is threatened by the continued loss of old-growth and mature forest to logging, dam construction, agricultural clearing, and golf course construction. Its limited range and tiny population make it vulnerable to extinction from disease and natural disasters such as typhoons (IUCN 2006). During the 1930s, the Okinawa woodpecker was considered nearly extinct. By the early 1990s, the breeding population was estimated to be about 75 birds, with a total estimated population ranging between 146 and 584 individuals (BirdLife International 2006). The species is legally protected in Japan and occurs in small protected areas on Mt. Ibu and Mt. Nishime (BirdLife International 2006). The Yambaru, a forest area in the Okinawa Prefecture, was designated as a national park in 1996, and conservation

organizations have purchased sites where the woodpecker occurs to establish private wildlife preserves (del Hoyo *et al.* 2002).

The Okinawa woodpecker represents a monotypic genus. This species faces threats that are moderate in magnitude because the species is legally protected in Japan, and its range occurs in several protected areas. However, the threats to the species are imminent because the old-growth habitat, upon which the species is dependent, continues to be removed, and preferable habitat continues to be altered for agriculture and golf courses. It therefore receives a priority rank of 7.

Yellow-browed toucanet (*Aulacorhynchus huallagae*)

The yellow-browed toucanet is known from only two localities in north-central Peru, La Libertad, where it is uncommon, and Rio Abiseo National Park, San Martin, where it is very rare (BirdLife International 2006). There have been recent reports of the species from Leymebambe (T. Mark *in litt.* 2003, as cited in BirdLife International 2006). It inhabits a narrow altitudinal range between 2,125 and 2,510 m, preferring the canopy of humid, ephiphyte-laden montane forests, particularly areas that support *Clusia* trees (del Hoyo *et al.* 2002; Fjeldså and Krabbe 1990, as cited in BirdLife International 2006). This narrow distributional band may be related to the occurrence of the larger grey-breasted mountain toucan (*Andigena hypoglauca*) above 2,300 m, and the occurrence of the emerald toucanet (*Aulacorhynchus prasinus*) below 2,100 m (Schulenberg and Parker, as cited in Collar *et al.* 1992). The species' restricted range remains unexplained, and recent information indicates that both of the suggested competitors have wider altitudinal ranges which completely encompass the range of the yellow-browed toucanet (Collar *et al.* 1992 and J. Hornbuckle in litt. 1999; as cited in BirdLife International 2006). The yellow-browed toucanet does not appear to occupy all potentially suitable forest available within its range (Schulenberg and Parker 1997, as cited in BirdLife International 2006).

Deforestation has been widespread in this region, but has largely occurred below the toucanet's altitudinal range (BirdLife International 2006). However, coca growers have taken over forests within its altitudinal range, probably resulting in some reductions in the species' range and population (IUCN 2006). It is listed as Endangered by IUCN because of its very small range and extant population records from only two locations (IUCN 2006). The current population size is unknown, but the population trend is believed to be decreasing (BirdLife International 2006).

The yellow-browed toucanet does not represent a monotypic genus. The magnitude of threat to the species is moderate and non-imminent. Therefore, it receives a priority rank of 11.

Royal cinclodes (*Cinclodes aricomae*)

The royal cinclodes occurs in the Andes of southeastern Peru (Cuzco, Apurimac, and Puno) and adjacent Bolivia (La Paz) (BirdLife International 2000). It is found in tiny humid patches of *Polylepis* woodland and montane scrub, mainly at 3,500–4,800 m (Parker *et al.* 1996). This species is classified as Critically Endangered by IUCN because it has an extremely small population that is restricted to a severely fragmented and rapidly declining habitat (IUCN 2006). In addition, no sub-population is thought to exceed 50 mature individuals (IUCN 2006). The population estimate for this species is 50–249 birds, with a decreasing population trend (BirdLife International 2000). The species' main threat is the inability of *Polylepis* to regenerate due to the uncontrolled use of fire and heavy grazing (Fjeldså and Kessler 1996, as cited in BirdLife International 2000). Harvesting for timber, firewood, and charcoal, although locally destructive, could be sustainable if regeneration was allowed to occur (Fjeldså and Kessler 1996, as cited in BirdLife International 2000).

The royal cinclodes does not represent a monotypic genus. The magnitude of threat to the species is high due to an extremely small population that inhabits a small, severely fragmented range. The immediacy of threat to the species is imminent resulting from the continuing fragmentation of habitat and lack of regeneration of the *Polylepis* forest. We therefore have assigned a priority rank of 2 to this species.

White-browed tit-spinetail (*Leptasthenura xenothorax*)

The white-browed tit-spinetail is restricted to a severely fragmented range in south-central Peru in the Runtacocha highland (Apurimac), the Nevado Sacsarayoc Massif, and the Cordillera Vilcanota (Cuzco) (BirdLife International 2000). These birds occur in small, widely scattered patches of humid *Polylepis* woodlands at 3,700–4,550 m (BirdLife International 2000). Since 2000, the IUCN categorizes the white-browed tit-spinetail as Endangered because of its extremely small population and limited, fragmented range. The species' range continues to decline from habitat loss and a lack of habitat regeneration (IUCN 2006). The population is estimated at 250–999 individuals and declining (BirdLife International 2000). Regeneration of *Polylepis* woodlands is prevented by uncontrolled fires, heavy grazing, harvest for fuel and construction, and the inadequacy of re-forestation projects. Loss of *Polylepis* habitat is the greatest threat to the survival of the white-browed tit-spinetail (Fjeldså and Kessler 1996, as cited in BirdLife International 2000; Rome 2003). International non-government organizations (NGO's) have attempted to draw local attention to the plight of *Polylepis* woodlands in Cuzco, with the hope that it may lead to better environmental controls (Fjeldså and Kessler 1996, as cited in BirdLife International 2000). The American Bird Conservancy and the Peruvian Association for the Conservation of Andean Ecosystems have teamed together with Conservation International's Critical Ecosystem Partnership Fund (CEPF) to protect the *Polylepis* forests and develop alternatives for local consumption of fuel and timber. The joint program provides *Polylepis* saplings for forest regeneration, and *Eucalyptus* saplings for use as an alternative timber species. The villagers are paid to plant the saplings in a community aid program, ensuring stakeholder benefits for the *Polylepis* forest regeneration; and it is hoped, increased population numbers of the white-browed tit-spinetail and other endangered species that depend on this habitat (Rome 2003).

The white-browed tit-spinetail does not represent a monotypic genus. The magnitude of threat to this species is high as the population is very small and declining. The immediacy of threat to the species is imminent and continues due to continuing fragmentation of its *Polylepis* forest habitat. It has therefore received a priority rank of 2.

Black-hooded antwren (*Formicivora erythronotos*, Previously Referred to as *Myrmotherula erythronotos*)

The black-hooded antwren inhabits early successional secondary growth habitats, and the understory of remnant old-growth secondary forests in coastal southeastern Brazil (BirdLife International 2000; Harris and Pimm 2004). This antwren species was previously known only from twenty skins that were collected during the19th Century (Buzzetti 1998, E. Mendonça and L.P. Gonzaga *in litt.* 2000, as cited in BirdLife International 2006), and was believed to be extinct until it was

rediscovered in 1987 (Harris and Pimm 2004). The IUCN classifies the species as Endangered because it has a very small and highly fragmented range. The black-hooded antwren appears to be declining rapidly in response to continuing habitat loss. Currently, it is known to inhabit seven sites (IUCN 2006). The population is estimated at 1,000–2,499 birds with a decreasing population trend (BirdLife International 2006). IUCN notes, however, that there is a serious need for new population demographic information because the species' current population size is unknown (IUCN 2006). The black-hooded antwren resides in one of the most densely populated regions of Brazil and deforestation has been occurring for more than 400 years (BirdLife International 2003). The main threats to the species include ongoing urbanization, industrialization, and agricultural expansion. The antwren's habitat has been reduced to less than 10 percent of its original extent (Brown and Brown 1992, as cited in BirdLife International 2003).

There have been recent reports that the species has been seen with increased frequency at a coastal reserve near Rio De Janeiro, the Reserva Ecológica de Jacarepiá (Worldtwitch 2006). The black-hooded antwren inhabits an Endemic Bird Area (EBA), which is an area BirdLife International selects for habitat-based conservation of birds. Designating a particular area or region as an EBA encourages national and local governments to increase and improve conservation measures for the EBA, and possibly, other areas of concern (BirdLife International 2003). This particular EBA is located in coastal southeast Brazil around the Baía Ilha Grande in south Rio de Janeiro, Brazil (BirdLife International 2001; BirdLife International 2006).

The black-hooded antwren does not represent a monotypic genus. It faces threats that are high in magnitude; the most significant threat is loss of habitat. The antwren prefers remnant old-growth secondary forests; however, it resides in one of the most densely populated regions of Brazil, where deforestation has occurred for centuries. Threats are imminent because degradation and loss of the species' habitat is a continuing problem as a result of urbanization, industrialization, and agricultural expansion. Therefore, the species receives a priority rank of 2.

Fringe-backed fire-eye (*Pyriglena atra*)

The fringe-backed fire-eye is known from the narrow coastal belt of Atlantic forest in the vicinity of Salvador, coastal Bahia (west of the town of Santo Amaro), forest patches along the Linha Verde highway, and north to southern Sergipe (in the vicinity of Crasto and Santa Luzia de Itanhia), Brazil (Collar *et al.* 1992, Pacheco and Whitney 1995, J. Minns *in litt.* 1998, B.M. Whitney *in litt.* 1999, and J. Mazar Barnett *in litt.* 2000; all as cited in BirdLife International 2006). Recent fieldwork indicates that species' distribution is not as disjunct as previously considered because the species has been found in remnant forest and secondary-growth patches along the northern coast of Bahia at Conde and Jandaíra (Souza 2002, as cited in BirdLife International 2006). Although populations may have been vastly reduced over time, the species' preference for early successional secondary-growth habitat means its range is likely to have been underestimated (BirdLife International 2006). The fire-eye also favors the tangled, dense undergrowth of lowland forests as well as other semi-open habitats where horizontal perches are located close to the ground (BirdLife International 2006). Currently, the population is estimated at 1,000–2,499 individuals (BirdLife International 2006), an increase from the population estimate in 2000, which indicated between 250 and 999 individuals remained in the wild (BirdLife International 2000). The increase in population numbers may be attributed to recent fieldwork which indicates that distribution was not as disjunct as previously thought because the species was found to reside in habitat that had not been considered to contain the species (Souza 2002, as cited in BirdLife International 2006). From 2000–2004, the fringe-backed fire-eye was categorized as Critically Endangered by the IUCN because of its extremely small range and declining habitat, and because it was known from a few, highly-fragmented localities (IUCN 2002). The fringe-backed fire-eye is now classified as Endangered by the IUCN because the fieldwork has shown that the species' range is more extensive than previously known. It does, however, still have a very small, fragmented range within which the extent and quality of its habitat are continuing to decline, and where it is only known from a few localities (IUCN 2006). The species is protected under Brazilian law (BirdLife International 2006). The greatest threat to the species continues to be habitat loss (BirdLife International 2006).

The fringe-backed fire-eye does not represent a monotypic genus. The greatest threat to the species continues to be habitat loss. This threat is high in magnitude because it has a significant impact on the species. Threats to the species are imminent because the species utilizes only a very small, fragmented range within which the extent and quality of its habitat are continuing to decline. It therefore receives a priority rank of 2.

Brown-banded antpitta (*Grallaria milleri*)

The brown-banded antpitta is endemic to the Volcan Ruíz-Tolima massif of the central Andes (Caldas, Risaralda, Quindío, and Tolima), Colombia (BirdLife International 2006). In Ucumari, this species has been recorded in three types of habitat with no significant difference in population density between the three: Early secondary growth vegetation with a high density of herbs and shrubs; the understory of 30-year-old alder (*Alnus*) plantations; and the understory of 30-year-old secondary forest (Kattan and Beltran 1997, as cited in BirdLife International 2006). Kattran and Beltran (2002) found that the species exhibited high site fidelity over a relatively small territory. Between 1911 and 1942, only ten specimens were collected at elevations of 2,745–3,140 m in Caldas and Quindío (Kattan and Beltrán 1997, BirdLife International 2006; as cited in BirdLife International 2006). The species was not seen for more than 50 years, until it was rediscovered in May 1994, in Ucumarí Regional Park, Risaralda (Kattan and Beltran 1997, BirdLife International 2003; as cited in BirdLife International 2006). Surveys conducted between 1994 and 1997 along a narrow elevational band of 2,400–2,600 m discovered 11 more birds which were subsequently banded. Based on these surveys, it was estimated that 106 individuals were present in a 0.63 km^2 area (Kattan and Beltran 1997, 1999; as cited in BirdLife International 2006). Further observations of the species were made during 1998–2000 on the southeast slope of Volcán Tolima in the Río Toche Valley, where it is considered uncommon and local (López-Lanús *et al.* 2000, López-Lanús *in litt.* 2000, P.G.W. Salaman *in litt.* 1999, 2000; and Renjifo *et al.* 2002; as cited in BirdLife International 2006). In 1999 and 2000, the brown-banded antpitta was also found in the Río Blanco watershed (Caldas) and near Roncesvalles (Tolima) (Renjifo *et al.* 2002, as cited in BirdLife International 2006).

The greatest threat to the brown-banded antpitta is conversion of habitat for agricultural purposes and habitat fragmentation (Wildlife Conservation Society 2006, BirdLife International

2006). Since the 1950s, forested land has been converted to agriculture in the Río Toche Valley and natural vegetation cover within a narrow elevational band, between 1,900 and 3,200 m where the species is most likely to be found, has been reduced to about 15 percent (BirdLife International 2006). The IUCN has classified the species as Endangered since 1994 because it is known from very few locations, in a very small range (IUCN 2006). This classification also takes into account continuing habitat loss and degradation within that limited range (IUCN 2006). Population estimates for this species range between 250–999 birds, with a decreasing population trend (BirdLife International 2006). It should be noted however, that Kattan and Beltran (2002) found that population densities are higher than previously assumed because the species is very secretive and difficult to locate in the forest understory. Significant numbers of brown-banded antpittas are protected in Ucumarí Regional Park, Risaralda (Kattan and Beltran 1997, as cited in BirdLife International 2006), unlike the Río Toche watershed area which does not provide any form of legal protection for the species. The limited remaining forest within the watershed continues to diminish and has become increasingly fragmented (Lopez-Lanus *et al.* 2000)

The brown-banded antpitta does not represent a monotypic genus. The threats to the species are high in magnitude, and the conversion of habitat for agricultural purposes is the most significant threat. Previously forested land has been converted to agriculture, and natural vegetative cover within a narrow elevational band where the species is most likely to be found (between 1,900 and 3,200 m) has been reduced to about 15 percent of its former extent. Habitat fragmentation, range reduction, and the decline in habitat quality are imminent and ongoing threats to the species. It therefore receives a priority rank of 2.

Brasilia Tapaculo (*Scytalopus novacapitalis*)

The Brasilia tapaculo is found in swampy gallery forest, disturbed areas of thick streamside vegetation, and dense secondary growth of the bracken fern *Pteridium aquilinum,* from Goiás, the Federal District, and Minas Gerais, Brazil (Negret and Cavalcanti 1985, as cited in Collar *et al.* 1992; Collar *et al.* 1992; BirdLife International 2000). The Brasilia Tapaculo will occasionally colonize disturbed areas near streams (BirdLife International 2003). This species has only been recorded locally within Formas in Goiás, around Brasília. Particular sites where the species has been located, at low densities, include Serra Negra (on the upper Dourados River) and the headwaters of the São Francisco, both in Minas Gerais; and Serra do Cipó and Caraça in the hills and tablelands of central Brazil (BirdLife International 2003).

Although the species was once considered rare (Sick and Texeira 1979, as cited in Collar *et al.* 1992), it is now found in reasonable numbers in certain areas of Brasilia (D. M. Teixeira, *in litt.* 1987, as cited in Collar *et al.* 1992). The population is estimated at more than 10,000 birds, with a decreasing population trend (BirdLife International 2000). The IUCN categorizes *Scytalopus novacapitalis* as Lower Risk/near threatened (IUCN 2006). The species occupies a very limited range and is presumably losing habitat around Brasilia. However, its distribution now appears larger than initially believed, and the swampy gallery forests where it is found are not conducive for clearance, protecting at least some of the species' habitat (D. M. Teixeira *in litt.* 1987, as cited in Collar *et al.* 1992). The Brasilia tapaculo is currently protected by Brazilian law (Bernardes *et al.* 1990, as cited in Collar *et al.* 1992), and it is found in six protected areas (Machado *et al.* 1998, Wege and Long 1995; as cited in BirdLife International 2006). Annual burning of adjacent grasslands limits the extent and availability of suitable habitat, as does wetland drainage and the sequestration of water for irrigation (Machado *et al.* 1998, as cited in BirdLife International 2006).

The Brasilia tapaculo does not represent a monotypic genus. The magnitude of threat to the species is moderate because the population is much larger than previously believed and preferred habitat is swampy and difficult to clear. Threats are imminent, however, because habitat is being drained for agricultural irrigation and grassland burning limits the extent of suitable habitat. Therefore, it receives a priority rank of 8.

Kaempfer's tody-tyrant (*Hemitriccus kaempferi,* Previously Referred to as *Idioptilon kaempferi*)

The Kaempfer's tody-tyrant is very rare and has a very small, extremely fragmented range which is estimated to be about 19 km^2 (BirdLife International 2006). The species is only known from three localities in Santa Catarina, Brazil: one record at Salto do Pirai near Villa Nova in 1929, one specimen that was collected at Brusque in 1950, and another in Reserva Particular do Patrimô nio Natural de Volta Velha, near Itapoá in 1998 (Mazar Barnett *et al.* 2000, L.N. Naka *in litt.* 1999; as cited in BirdLife International 2006). It inhabits humid lowland Atlantic forest. At one of these localities, Salto do Pirai, the species has typically been found in habitats which include forest edge, well-shaded secondary growth, and sections of low, epiphyte-laden open woodland near watercourses (Mazar Barnett *et al.* 2000, as cited by BirdLife International 2006). It feeds predominantly in the midstory of medium-sized trees, and mated pairs appear to remain within small well-defined areas (Mazar Barnett *et al.* 2000, as cited by BirdLife International 2006).

In 2004, the IUCN changed the Kaempfer's tody-tyrant's decade-long classification from Endangered to Critically Endangered because the species has an extremely small and fragmented range, with recent records from only two locations, and ongoing deforestation is occurring in the vicinity of these sites (IUCN 2006). The population estimate is 1,000–2,499 individuals and declining (BirdLife International 2006). The Atlantic forest has been extensively deforested, and the lowland forest continues to be cleared in the vicinity of the two remaining sites (BirdLife International 2006). The Kaempfer's tody-tyrant is protected by Brazilian law, occurring in one protected area, and in adjacent forest (BirdLife International 2006).

This species does not represent a monotypic genus. Threats to the species are high in magnitude because the Kaempfer's tody-tyrant displays specific habitat preferences that are becoming more difficult to locate over time. The species is adapted to specific areas within the forest, and mated pairs appear to remain within small, well-defined locales. However, ongoing deforestation has had a significant impact on the species' habitat and is limiting the species to a very small, extremely fragmented range. The threats to the species are imminent because deforestation of the Brazilian Atlantic forest is ongoing. Therefore, it has been assigned a priority rank of 2.

Ash-breasted tit-tyrant (*Anairetes alpinus*)

The ash-breasted tit-tyrant is confined to semi-humid *Polylepis-Gynoxys* woodlands in the high Andes in Peru and Bolivia (BirdLife International 2000). There are two widely disjunct populations: the subspecies *A. a. alpinus* occurs in the Cordilleras Central and Occidental, Peru, and *A. a. bolivianus* occurs in the Cordillera Oriental, Peru, and in the Cordillera Real, Bolivia (Collar *et al.* 1992; Fjeldså and Kessler 1996; BirdLife International 2000). It is relatively common in the

Runtacocha highland, Apurimac, and the Cordillera Vilcabamba, Cuzco (Fjeldså and Kessler 1996, as cited in BirdLife International 2000). The IUCN categorizes the ash-breasted tit-tyrant as Endangered because it has a very small population and is confined to a habitat which is severely fragmented and undergoing continuing decline in extent, area, and quality (IUCN 2006). The population is estimated at 250–999 individuals and declining (BirdLife International 2000). Extensive cattle grazing is the primary threat to the species, especially in Ancash, which, combined with the uncontrolled use of fire, prevents *Polylepis* regeneration (Fjeldså and Kessler 1996 and G. Servat *in litt.*, as cited in BirdLife International 2000). Additionally, recent changes from camelid to sheep and cattle farming, erosion, and soil degradation caused by agricultural projects and deforestation are contributing factors to the continued decline of the species (Fjeldså and Kessler 1996, as cited in BirdLife International 2000).

The Asociación Armonía, Conservacion de Aves en Bolivia (Conservation of Birds in Bolivia), which is associated with BirdLife International, currently has two projects in the field to support the conservation of the ash-breasted tit-tyrant. The first, initiated in 2003, led to the discovery of several new sites for the ash-breasted tit-tyrant and the royal cinclodes. The goal of the project is to conduct ecological research on the ash-breasted tit-tyrant regarding its reproduction, territory size and behavior, which is essential for the species long-term conservation efforts. The other project involves meetings with local communities that live near the remaining fragments of *Polylepis* forests, to present information regarding the importance of these forest fragments. The project hopes to gain local support in developing methods to decrease threats to the forests and their associated fauna (Asociación Armonía 2005).

The ash-breasted tit-tyrant does not represent a monotypic genus. The threat is high in magnitude for this species because grazing cattle prevent regeneration of the *Polylepis* forest that is essential to the species. Threats to the species are imminent because habitat degradation is ongoing. Therefore, we have assigned it a priority rank of 2.

Peruvian plantcutter (*Phytotoma raimondii*)

The Peruvian plantcutter formerly inhabited the coastal region of northern Peru from Tumbus to Lima (BirdLife International 2006). There have only been records from two areas, near Talara and Chiclayo in recent years (G. Engblom *in litt.* 1998, 1999, 2000; Flanagan and Chávez-Villavicencio 2000; Begazo *et al.* 2001; as cited in BirdLife International 2006). Searches at other sites and in apparently suitable habitat have failed to locate the species (G. Engblom *in litt.* 1998, 1999, 2000; as cited in BirdLife International 2006). The species occurs in desert scrub at elevations up to 500 m, in areas of riparian thicket, and low dense, and open woodland dominated by *Prosopis* trees, with some *Acacia* spp. (G. Engblom *in litt.* 1998, 1999, 2000; as cited in BirdLife International 2006). The IUCN categorizes the Peruvian plantcutter as Endangered because of its extremely small and fragmented range, and its remaining habitat is subject to rapid and continuing destruction and degradation (IUCN 2006). The population is currently estimated at 500–1,000 individuals and declining (BirdLife International 2006). Threats include the near-complete conversion of coastal river valleys to cultivation, removal of the shrub layer by grazing goats, and burning and logging for firewood and charcoal (Engblom *in litt.* 1998, 1999, 2000; as cited by BirdLife International 2000).

A portion of the species habitat is located within an area that is owned by PetroPeru; the company prevents trespassing on its lands, and as a result, the species is afforded some protection. PetroPeru has also supported fieldwork and educational programs for the species (Elton 2004).

The Peruvian plantcutter does not represent a monotypic genus. Threats to the species are high in magnitude due to forest land conversion for agriculture, removal of the shrub layer by grazing goats, and burning and logging for firewood and charcoal. The threats are imminent because this land conversion is ongoing and continues to reduce the species' range. Therefore, it receives a priority rank of 2.

St. Lucia forest thrush (*Cichlherminia iherminieri sanctaeluciae*)

The St. Lucia forest thrush is found on the island of St. Lucia in the West Indies (Raffaele *et al.* 1998). It generally inhabits the undergrowth of mid- and high-altitude primary and secondary moist forest (Raffaele *et al.* 1998; Keith 1997, as cited in BirdLife International 2000). On St. Lucia, it is uncommon to rare, but was considered numerous in the late 19th Century (Keith 1997, as cited in BirdLife International 2000). It is currently treated as a subspecies of the forest thrush (*Cichlherminia iherminieri*), which is classified as Vulnerable by IUCN because of human-induced deforestation and introduced predators (IUCN 2006). Habitat loss has occurred throughout the subspecies' range, and other threats include competition with the bare-eyed robin (*Turdus nudigenis*), brood parasitism by the shiny cowbird, hunting by humans for food, and predation by mongooses and other introduced predators (Raffaele *et al.* 1998).

This subspecies faces threats that are high in magnitude because of a declining population trend, and imminent resulting from ongoing deforestation, competition with other avian species, brood parasitism, and predation by animals and humans. It therefore receives a priority rank of 3.

Eiao Polynesian warbler (*Acrocephalus caffer aquilonis*)

The Eiao Polynesian warbler is restricted to dry forest on Eiao Island in the Marquesas Islands. Decker (1973) found that other races of the subspecies occupy a variety of habitats possessing trees or tall bushes, ranging from cultivated areas to dense forests. By 1960, only tiny remnants of woodland remained on the island, and after many years of grazing by introduced sheep and swine, it was described as being a barren desert of rock and orange clay. This warbler was apparently common in 1922, when the Whitney South Sea Expedition collected a number of specimens (Holyoak 1975, as cited by IUCN 1978–1979). Three more individuals were collected in 2 days in 1929, and it was still present in small numbers in 1968 (Holyoak 1975, as cited by IUCN 1978–1979). The population in 1987 was estimated at 100–200 individuals (Thibault, personal communication to Philippe Raust, Sociétéé d'Ornithologie de Polynésie 2003). Threats include predation by invasive mammals and a lack of habitat regeneration (Thibault, personal communication to Philippe Raust, Sociétéé d'Ornithologie de Polynésie 2003). This subspecies is also threatened by stochastic events, such as typhoons, which could extirpate this entire subspecies.

The most significant threat to the Eiao Polynesian warbler is habitat loss and its continued destruction due to grazing of introduced species. The threat is high in magnitude because the threat affects the entire population of this island endemic species. The threat is imminent as it is ongoing and is rendering the island largely barren of suitable habitat for the warbler. It therefore receives a priority rank of 3.

Codfish Island fernbird (*Bowdleria punctata wilsoni*)

The Codfish Island fernbird is found only in low scrub habitat on Codfish Island, off the northwest coast of Stewart Island, New Zealand (IUCN 1979). Codfish Island's native vegetation has been modified by introduced Australian brush-tailed possums (*Trichosurus vulpecula*). Fernbird populations have also been reduced due to predation by weka (*Gallirallus australis scotti*) and Polynesian rats (*Rattus exulans*) (Merton 1974, personal communication, as cited in IUCN 1979). In 1966, the status of this subspecies was considered relatively safe (Blackburn 1967, as cited in IUCN 1979), but estimates dating from 1975 indicated a gradually declining population numbering approximately 100 individuals (Bell 1975, as cited in IUCN 1979). At that time, the subspecies was absent from areas of Codfish Island that it had formerly occupied (Blackburn 1967, as cited in IUCN 1979). Several conservation measures have been undertaken on Codfish Island. An eradication program for the weka was carried out between 1980 and 1985 (Taylor 2000), and Polynesian rats were eradicated from Codfish Island in August 1998 (Conservation News 2002). The fernbird population is rebounding strongly with the removal of invasive predator species (Hayley Meehan, New Zealand Forest and Birds, personal communication, 2003).

The Codfish Island fernbird is a subspecies that is now facing threats that are low to moderate in magnitude because the removal of invasive predator species has allowed for a strong rebound in the subspecies' population. Threats are non-imminent because the conservation measures to prevent the invasion of predatory invasive species have proven to be very successful. It therefore receives a priority rank of 9.

Ghizo white-eye (*Zosterops luteirostris*)

The Ghizo white-eye is endemic to Ghizo in the Solomon Islands (BirdLife International 2006). Birds are locally common in the remaining tall or old-growth forests located on Ghizo (Buckingham *et al.* 1995 and Gibbs 1996, as cited in BirdLife International 2006). It is less common in scrub close to large trees and in plantations (BirdLife International 2006), and it is not known whether these two habitats can support sustainable breeding populations (Buckingham *et al.* 1995, as cited in BirdLife International 2006). The IUCN classifies this species as Endangered because of its very small population that is inferred to be declining due to habitat loss (IUCN 2006). It further notes that the species would be classified as Critically Endangered if the species' range was judged to be severely fragmented (IUCN 2006). The population estimate for this species is 250–999 birds with a decreasing population trend (BirdLife International 2006). The very tall old-growth forest on Ghizo is still under threat from clearance for local use, firewood, and gardens, and the areas of other secondary growth, which are sub-optimal habitats for this species, are under considerable threat from clearance for agricultural land (BirdLife International 2006).

The Ghizo white-eye does not represent a monotypic genus. It faces threats that are moderate in magnitude and imminent. Threats are continuing because the old-growth forest which the species is dependent upon is still being cleared for local use and secondary growth is being converted for agricultural purposes. Therefore we assign the species a priority rank of 8.

Medium tree-finch (*Camarhynchus pauper*)

The medium tree-finch is endemic to Floreana in the Galapagos Islands, Ecuador (BirdLife International 2006). It is common in the highlands and considered uncommon to rare on the coast (Harris 1992). The finch prefers montane evergreen and tropical deciduous forest, the *Scalesia* zone, and humid scrub (Stotz *et al.* 1996). This poorly known species is considered Vulnerable by the IUCN because population trends are unknown; it has a very small range, and it is restricted to a single island where introduced species are a potential threat (IUCN 2006). Predator control is occurring on Floreana, Santa Cruz, and Santiago Islands (H. Vargus and F. Cruz (*in litt.*) 2000, as cited in BirdLife International 2006). The Galapagos Islands are a national park and were declared a World Heritage Site (WHS) in 1979 (BirdLife International 2006). When a specific area is designated a WHS it means that the area is considered globally important, and it is in the interest of the international community to preserve the site for future generations of humanity. The protection and conservation of the site becomes a concern of all the World Heritage countries. Furthermore, funds for certain conservation projects can be obtained through the World Conservation Fund by designees (UNESCO 2006).

The Government of Ecuador (GoE) has also been encouraged by the World Heritage Committee and others to further protect the islands through enactment of the Special Law for Galapagos which includes: stricter controls on immigration to the site; creation of a quarantine system to combat alien species; the creation of a much larger marine reserve around the islands with improved legal protection; limitations on property rights and economic activities to make these consistent with the goal of conservation, and; increased national funding allocation to the site (WHS 2006). Designating the Galapagos Islands as a WHS, however, has also led to an increase in tourism, which has in turn produced a negative effect on the islands through the increased volume of waste generated by tourists, and more importantly for this species, the spread of invasive species.

The medium tree-finch does not represent a monotypic genus. The magnitude of threat to the species is moderate in magnitude as the species is common in the forested highlands and its habitat has not been highly degraded. The immediacy of threat is non-imminent because the species' habitat is protected by the area's national park and WHS status. We therefore give this species a priority rank of 11.

Cherry-throated tanager (*Nemosia rourei*)

The cherry-throated tanager is currently known from Fazenda Pindobas IV in Espirito Santo, Brazil, where small numbers have been recorded since 1998 (Bauer *et al.* 2000). Prior to 1998, the species was only known from one type specimen, collected around the mid-19th Century in Muriae, Minas Gerais, and from a flock of eight individuals seen in the region of Jatiboca, Espirito Santo, in 1941 (Collar *et al.* 1992). Unconfirmed sightings of the tanager at the Augusto Ruschi (Nova Lombardia) Biological Reserve in 1992 (Scott 1997) and Fazenda Pedra Bonita, Minas Gerais led to intensive fieldwork in an effort to document the presence of the species (Bauer *et al.* 2000). Two groups of *N. rourei* have been definitely located, a population of at least six individuals at Fazenda Pindobas IV and another of at least eight individuals at Caetes. Further observations of a low-density population from the reserve at Augusto Ruschi confirmed Scott's (1997) sightings of the species (Venturini *et al.* 2005).

The species inhabits the canopy of Atlantic dense ombrophyllous montane forest at elevations of 850–1,200 m (Venturini *et al.* 2005). There is evidence of the species' occurrence in

coffee plantations and plantations of *Eucalyptus* sp. and *Pinus* spp., but these sightings are sporadic and believed to be related to movements between fragments through corridors of otherwise unsuitable habitat (Venturini *et al.* 2005). The cherry-throated tanager is categorized as Critically Endangered by IUCN because of its extremely small range and small population (IUCN 2006). The population is estimated at 50–249 individuals and declining (BirdLife International 2000). Extensive deforestation is believed to have had an adverse impact on the species (IUCN 2006). This species is protected by Brazilian law and its range may include protected areas (BirdLife International 2000). The owners of Fazenda Pindobas IV have expressed interest in protecting the remaining native forest on their property (Venturini, *in litt.* 2000, as cited in BirdLife International 2006). Fazenda Pindobas IV has been designated an Important Bird Area (IBA) by BirdLife International. The IBA program is a worldwide initiative to identify and protect a network of critical sites for the conservation of the world's birds. The owners of Fazenda Pindobas IV are cooperative with the scientists studying the species within their particular IBA (BirdLife International 2006).

The cherry-throated tanager does not represent a monotypic genus. Loss of habitat is the most significant threat to the species, and this threat is high in magnitude because there has been extensive deforestation within the species' extremely limited range. This threat is imminent because deforestation continues throughout the area. Therefore, the species receives a priority rank of 2.

Black-backed tanager (*Tangara peruviana*)

The black-backed tanager is endemic to the coastal Atlantic forest region of southeastern Brazil, with records from Rio de Janeiro, Sao Paolo, Parana, Santa Catarina, Rio Grande do Sul, and Espirito Santo (Argel-de-Oliveira, *in litt.* 2000, as cited in BirdLife International 2006). It is largely restricted to coastal sand-plain forest and littoral scrub, or restinga, and has also been located in secondary forests (BirdLife International 2006). The black-backed tanager is generally not considered rare within suitable habitat (BirdLife International 2006; IUCN 2006). It has a complex distribution with periodic local fluctuations in numbers owing to seasonal movements, at least in Rio de Janeiro and Sao Paolo (BirdLife International 1992; IUCN 2006). Clarification of the species' seasonal movements will provide an improved understanding of the species' population status and distribution (IUCN 2006). Population estimates range from 2,500 to 10,000 individuals (BirdLife International 2006), and it is considered Vulnerable by the IUCN (IUCN 2006). The species is threatened by the rapid and widespread loss of habitat for beachfront development and occasionally appears in the illegal cage-bird trade (BirdLife International 2006).

The black-backed tanager does not represent a monotypic genus. The threat to the species is low to moderate in magnitude due to the species' fairly large population size and range. The threat is, however, imminent because the species is threatened by rapid and widespread loss of habitat due to beachfront development. Therefore, we give this species a priority rank of 8.

Lord Howe pied currawong (*Strepera graculina crissalis*)

The Lord Howe Island subspecies of the pied currawong is endemic to the Lord Howe Island group in New South Wales, Australia. The highest densities of nests are located on the slopes of Mt. Gower and in the Erskine Valley, with smaller numbers on the lower land to the north (Knight 1987, as cited in Garnett and Gabriel 2000). This subspecies is highly mobile, and individuals can be found anywhere on the island as well as on offshore islands such as the Admiralty group (Garnett and Gabriel 2000). Pied currawong territories include sections of streams or gullies that are lined by tall timber (Garnett and Gabriel 2000). They feed on dead rats, possibly chase and kill live rats, and have also been recorded taking seabird chicks, poultry, and the chicks of the Lord Howe woodhen (*Tricholimnas sylvestris*) and white terns (*Gygis alba*). The pied currawong will also consume fruits and seeds (Hutton 1991 and McFarland 1994, as cited Garnett and Gabriel 2000). Local residents have been known to kill currawongs that have attacked poultry, woodhens, or terns (Garnett and Gabriel 2000). However, it is unknown what effect this localized killing has on the overall population size and distribution of the subspecies (Garnett and Gabriel 2000). The Lord Howe pied currawong is listed as Endangered on the schedules of the New South Wales Threatened Species Conservation Act (Garnett and Gabriel 2000) because it has a limited range, only occurring on Lord Howe Island (New South Wales National Parks and Wildlife Service 2003). In the Action Plan for Australian Birds (2000), the population was estimated at approximately 80 mature individuals.

The Lord Howe pied currawong is a subspecies facing threats that are low in magnitude and non-imminent. Therefore, it receives a priority rank of 12.

Invertebrates

Harris' mimic swallowtail (*Eurytides [syn. Mimoides] lysithous harrisianus*)

Harris' mimic swallowtail is native to Brazil and may also occur in Paraguay (Collins and Morris 1985; Finnish University and Research Network (Funet) 2004). Two populations are confirmed in Rio de Janeiro and it is believed to be extant in Espirito Santo (Keith S. Brown, Jr., Livre-Docent, Universidade Estadual de Campinas, Brazil, pers. comm. 2004). Harris' mimic swallowtail occupies the sandy flats above the tidal margins of the coastal Atlantic Forest. The IUCN designated this subspecies as Endangered in 1988, 1990, and 1994 (IUCN 1996). However, it has not been re-evaluated using the 1997 criteria, nor has it been included on the 2006 IUCN Red List (IUCN 2006). The Brazilian Institute of the Environment and Natural Resources (Instituto Brasileiro do a Meio Ambiente de do Recursos Naturais Renováveis; IBAMA) considers this subspecies to be critically imperiled.

The flight habits of the Harris' mimic swallowtail are such that individuals are very hard to locate (K. Brown, Jr., pers. comm. 2004). Only one of the two known populations in Rio de Janeiro has been well-studied. This population has varied in numbers ranging between 50–250 individuals over an eight year period, and in 2004, was reported to be viable, vigorous, and stable (Brown 1996; K. Brown, Jr., pers. comm. 2004). In 1997, a second population in Rio de Janeiro was located and confirmed in the Poço das Antas Biological Reserve, where it had not been seen for thirty years. Researchers believe that additional populations are likely to exist within the reserve (K. Brown, Jr., pers. comm. 2004).

The adult Harris' mimic swallowtail mimics at least three *Parides* spp. which are located within its range. Mimicry (being similar in appearance to other non-related species) can produce errors when attempting to determine the species' range, distribution, and existing population. Farther north along the coastal plain, the species is often confused with the Fluminense swallowtail (*Parides ascanius*) (K. Brown, Jr., pers. comm. 2004). It is possible that Harris' mimic swallowtail exists in Espirito Santo, but that it has been mistaken for the Fluminese swallowtail (Brown 1991; Otero and

Brown 1984; R. Robbins, Research Entomologist, National Museum of Natural History, Department of Entomology, Smithsonian Institution, Washington, DC pers. comm. 2004). IBAMA listed Harris' mimic swallowtail as ''strictly protected'' in 1989. Collection and trade of the species are prohibited under this listing (Brown 1996).

Habitat destruction due to urbanization, and air and water pollution are the main threats to this subspecies (Brown 1996; Central Intelligence Agency (CIA) 2006). The Poço das Antas Biological Reserve, where one population of the Harris' mimic swallowtail is known to exist, was established in 1974 and encompasses 5,300 hectares of inland Atlantic Forest territory (WWF 2006; Decree No. 73,791 1974). In the period between 1989 and 2002, the Reserve experienced at least six fires; however, there have been no recent reports of fires within the Reserve, and it appears that significant progress is being made in engaging private landowners in conservation efforts near the Reserve (Cullen *et al.* 2005; Matsuo 2005; WWF 2001a). Espirito Santo lies completely within the Atlantic Forest region. Only 8.4 per cent (less than 400,000 hectares) of the original forest remains and only 3 per cent (or 72,263 hectares) is managed and protected by the state or federal government (Critical Ecosystem Partnership Fund (CEPF) 2001; Roach 2002).

Harris' mimic swallowtail does not represent a monotypic genus, but it is a subspecies. The current threats to the species are low in magnitude because of the two known populations, one is considered to be viable, vigorous, and stable and the other population has been located and confirmed in the Poço das Antas Biological Reserve, where it had previously not been seen for thirty years. The threats are non-imminent because the species is strictly protected by Brazilian law. Furthermore, at least one population resides in the Poço das Antas Biological Reserve, where the species and its habitat are protected and preserved. Researchers presume that the species' distribution is larger than currently known, and are attempting to locate other populations inhabiting the Reserve and additional sites within the coastal Atlantic forest, including suitable areas in Paraguay. Therefore, the species is designated a priority rank of 12.

Jamaican kite swallowtail (*Eurytides marcellinus*)

The Jamaican kite swallowtail is endemic to Jamaica. The IUCN designated this swallowtail as Vulnerable, but it has not been re-evaluated using the 1997 criteria (IUCN 2006). The species is protected under Jamaica's Wildlife Protection Act of 1998 and is included in Jamaica's National Strategy and Action Plan on Biological Diversity, which has established specific goals and priorities for the conservation of Jamaica's biological resources (Schedules of The Wildlife Protection Act 1998).

The Jamaican kite swallowtail appears to have a low population level, but occasionally becomes locally abundant during breeding season for a week or two at its breeding site. There is only one known breeding site being utilized by the species at this time. This area is located in Rozelle, where the swallowtails brood in early summer and occasionally again in early fall (Collins and Morris 1985; Garraway *et al.* 1993; Smith *et al.* 1994). Episodic population explosions have been recorded which are subsequently accompanied by significant westerly migrations of males when population numbers become high (Brown and Heineman 1972; Collins and Morris 1985; Garraway *et al.* 1993). Considerable numbers of Jamaican kite swallowtails were reported in western Jamaican parishes during the 1940s and 1950s (Bailey 1994; Garraway *et al.* 1993). Adult Jamaican kite swallowtails have recently been sighted as far away as St. Thomas, as well as westward to St. Andrew, St. Ann, Trelawny, and the extreme western coast Parish of Westmoreland. The species has reportedly migrated even as far as Florida (Bailey 1994; Funet 2004; Harris 2002; Smith *et al.* 1994; WRC 2001).

Under normal conditions, the Jamaican kite swallowtail disperses no farther than three kilometers from its breeding site, but considering the presence of the larval host-plant throughout the island (R. Robbins, pers. comm. 2004), it is likely that additional breeding sites exist. The only known larval food plant is West Indian lancewood (*Oxandra lanceolata*) (Bailey 1994; Xerces 2004); adult food preferences are unknown.

The John Crow Mountains, spanning several parishes where Jamaican kite swallowtail adults have been found, was declared a protected area in 1993. Cockpit Country (Trelawny Parish), where Jamaican kite swallowtail adults have recently been sighted, is described as nearly impenetrable to humans owing to its terrain (WRC 2002). In 2001, the area became part of the Parks-in-Peril project (The Nature Conservancy (TNC) 2004–06). In 2003, the National Environment and Planning Agency (NEPA) identified Cockpit Country and Rozelle Beach as priority locations to receive protected area status within the next five to seven years (NEPA 2003).

In 2004, habitat destruction was considered a primary threat to the species. Rozelle has undergone extensive habitat modification for agricultural and industrial purposes (IUCN 2006). Mining operations, deforestation, and the lack of public awareness for conservation issues are threats throughout most of the island (WWF 2001a, 2001b, 2001c). Additionally, the West Indian lancewood, the larval stage's food plant, is a commercially desirable tree. Its wood is used to make fishing rods, pool cues, and other products (Windsor Plywood 2004). Harvesting the tree removes the larval stage's food source, and poses an additional threat because the swallowtail does not thrive in disturbed habitats (Collins and Morris 1985).

The Jamaican kite swallowtail is also subject to naturally occurring, high impact stochastic events. Jamaica lies within the Atlantic Ocean hurricane belt and is subject to severe tropical weather, such as tropical storms, and hurricanes (Mahlung 2001). In the last 18 years, Jamaica has been devastated by a tropical storm (Tropical Storm George in 1998), a Category 3 hurricane (Hurricane Gilbert in 1988), and four Category 5 hurricanes (Hurricane Mitch in 1998; Hurricane Ivan in 2004; Hurricane Dennis and Hurricane Emily in 2005). The hurricanes resulted in extensive damage throughout the island, particularly in Rozelle, which experienced 75 percent erosion in 1988 from Hurricane Gilbert, and extensive beach erosion in 2004 during Hurricane Ivan (The United Nations Environment Programme-Caribbean Environment Programme (UNEP-CEP) 1989; Go Local Jamaica 2004).

In 2000, the Jamaican kite swallowtail was identified as a species that was threatened by commercial trade in the European Union (EU); one female Jamaican kite swallowtail alone had a market value of US$150 (Melisch 2000; Schütz 2000). This species is not listed under CITES, nor is it listed on the European Commission's Annex B (Eur-lex 2006), both of which regulate international trade in animals and plants of conservation concern. There is no captive breeding program for the Jamaican kite swallowtail at this time. Protection under the Wildlife Protection Act, which carries a maximum penalty of $100,000 (Jamaican Dollars) or 12 months imprisonment, appears to be effectively protecting this species from illegal trade (NEPA 2005c).

The Jamaican kite swallowtail does not represent a monotypic genus. Threats to the species are moderate in magnitude because Jamaica has taken several important regulatory steps to preserve their native swallowtail species. Habitat destruction, however, is an ongoing problem. Although there has been no actual change in threats since this species was originally ranked in our December 7, 2004, 12–Month Finding on a Petition to List Seven Foreign Species of Swallowtail Butterflies as Threatened or Endangered (69 FR 70580), habitat loss represents an ongoing and imminent threat to the Jamaica swallowtail. Therefore, to ensure consistency in the application of our listing priority process, we changed the listing priority number from a 5 to an 8 to reflect that the threats are imminent. Therefore, it receives a priority rank of 8.

Fluminense swallowtail (*Parides ascanius*)

The Fluminense swallowtail is endemic to Brazil's restinga habitat (Thomas 2003). Restinga habitat, or Atlantic coastal forest, is a distinct type of coastal tropical and subtropical moist broadleaf forest found in Brazil. Restingas form on sandy, acidic, and nutrient-poor soils, and are characterized by medium sized trees and shrubs adapted to coastal conditions. Although the species has been reported in the three Brazilian states of Rio de Janeiro, Espirito Santo, and Sao Paulo where suitable habitat exists, the only confirmed populations are in Rio de Janeiro. The caterpillar feeds on a species in the Dutchman's pipe genus (*Aristolochia macroura*) (Otero and Brown 1984). Adult Fluminense swallowtails prefer nearshore environments, delta and estuarine forest and swamps, but have also been known to frequent scrub habitats and urban locations (Brown 1996; K. Brown, Jr., pers. comm. 2004).

Since 1988, the IUCN has designated this species as Vulnerable, based on a small distribution and a decline in the number of populations due to habitat fragmentation and decline. In 1973, the Fluminense swallowtail was the first invertebrate to be placed on Brazil's list of animals threatened with extinction. It was originally listed due to habitat destruction, and IBAMA continues to consider the species imperiled.

In Rio de Janeiro, the only Fluminense swallowtail population that was known for some time was located in Barro de São João. However, with large amounts of suitable habitat remaining to support Fluminense swallowtails, several large populations have been located in Rio de Janeiro State (K. Brown, pers. comm. 2004). Recent information suggests that at least two additional populations may exist, one far inland within the Poço das Antas Biological Reserve, and another along the coast in the Restinga de Jurubatiba National Park (K. Brown, Jr., pers. comm. 2004). Although the species is generally sparsely distributed, it can be seasonally common, with sightings of up to 50 individuals in one morning (Otero and Brown 1984; Tyler *et al.* 1994). It is unknown whether the species can produce more than one brood per year. Populations are localized, and require a large area to maintain a viable population (Otero and Brown 1984).

Over an 8-year period (1984 to 1991), the population at Barro de São João was found to fluctuate widely each year (ranging from 20 to 100 individuals). Individuals can fly distances of up to 1000 m. Individuals from this viable population migrate widely in some years, which will likely enhance inter-population gene flow (K. Brown, Jr. pers. comm. 2004). Much less is known about the other two Fluminense swallowtail populations. The Poço das Antas Biological Reserve is considered the only protected area with suitable habitat that is large enough to maintain a viable Fluminense swallowtail colony. Researchers have located large numbers of the swallowtails in the Reserve, and all of the Reserve's populations are being actively monitored (Otero and Brown 1984; R. Robbins, pers. comm. 2004).

This species is threatened by habitat destruction and commercial trade. The range of the Fluminense swallowtail overlaps that of the Harris' mimic swallowtail and faces similar threats to its restinga habitat, including urbanization, land conversion for cultivation and cattle grazing, and fires in the Poço das Antas Biological Reserve. However, there have been efforts to alleviate threats through resolutions of land disputes, efforts to increase public awareness of the plight of the butterflies, and private landowner's agreements to participate in conservation measures for the species.

The population located near the Jurubatiba National Park may face threats from industrialization. The sandy-soiled Barro de São João, where the best-documented Fluminense swallowtail population is located, is within the Macaé River basin. This river basin provides the coastal drainage habitat preferred by the Fluminense swallowtail and marks the outer edge of the Jurubatiba National Park (International Finance Corporation (IFC) 2002). Macaé has been an oil boom town since 1968, supporting offshore drilling rigs and the natural gas-fired Macaé Merchant Power Plant which was built in 2003 (IFC 2002). Prior to construction, United States-based El Paso had committed to several projects that would mitigate the environmental impacts of the power plant. These projects included promotion of environmental recovery, preservation of a mangrove preserve, and reforestation of native species within the Macaé river basin (IFC 2002). In April 2006, El Paso sold its interest in the power plant to Brazilian-based Petrobras (El Paso Corporation 2006). The current status and future disposition of the mitigation projects are unknown.

This species requires a large area to maintain a viable population; therefore, the Poço das Antas Biological Reserve is considered the species' best hope for conservation. Recent sightings of the Fluminense swallowtail in the Jurubatiba National Park, which is larger than Poço das Antas Biological Reserve, may bode well for the species. However, the management plan for the Jurubatiba National Park is not yet completed, and the Park is understaffed, lacks infrastructure, and has land ownership problems (Anonymous 2003).

Unlike Harris' mimic swallowtail, the Fluminense swallowtail is easy to capture. The species is strictly protected from commerce in Brazil, and a German market study in 2000 identified the Fluminense swallowtail as being commercially threatened in the EU (K. Brown, Jr., pers. comm. 2004; Melisch 2000; Schütz 2000). The species is not listed in the CITES Appendices, but it is listed on Annex B of the European Union's Council Regulation (EC) No. 338/97, which regulates imports of certain species into any country belonging to the European Union (Eur-Lex 2006). Import of an Annex B-listed species must be accompanied by information that demonstrates that the import will not detrimentally affect the conservation status of the species or its habitat (Eur-Lex 2006). There is no recent information regarding the current market for this species in the European Union.

The Fluminense swallowtail does not represent a monotypic genus. The current threats to the species are moderate in magnitude because three additional populations have been discovered recently, and it is believed that two additional populations are about to be located in the restinga. The species is desirable in trade, but it is strictly protected from international trade by Brazilian and EU regulation.

Threats to the species, however, are imminent and ongoing because habitat alteration and fragmentation continues due to increased urbanization, land conversion for cultivation and cattle grazing, and periodic fires. Therefore, it receives a priority rank of 5.

Hahnel's Amazonian swallowtail (*Parides hahneli*)

Hahnel's Amazonian swallowtail is endemic to two known populations along the tributaries of the middle and lower Amazon Basin of Amazonas and Pará States in Brazil (Collins and Morris 1985; New and Collins 1991; Tyler *et al.* 1994). The species occupies a wide range and is common in some areas, but is usually characterized as a species that is very local, rare and patchy in distribution due to its preference for highly specialized habitat (K. Brown, Jr., pers. comm. 2004). The swallowtail depends upon stranded beaches of river drainage areas. Wells *et al.* (1983) describes the habitat as ancient sandy beaches covered by scrubby or dense vegetation that is not floristically diverse. The larval host-plant is believed to be a species in the Dutchman's pipe genus, either *Aristolochia lanceolato-lorato* or *A. acutifolia.*

In 1983, the IUCN categorized this species as Rare; however, in 1996, when the species was most recently assessed, the IUCN determined that there was insufficient data to determine its status (Wells *et al.* 1983; IUCN 2006). In Brazil, Hahnel's Amazonian swallowtail is listed as a species under study, but it is not listed on the Brazilian list of animals threatened with extinction (MMA 2006), perhaps due to the species' wide range and tendency to be locally common (K. Brown, Jr., pers. comm. 2004).

Threats to the species include competition with other species, habitat destruction, and commercial trade. This species occupies the same range with another swallowtail butterfly, *Parides chabrias ygdrasilla,* and mimics at least two other genera that occupy the same area, *Methona* and *Thyrides* (Brown 1996). Previously, researchers believed that this species might suffer from host-plant competition with the other butterfly species in the region (Collins and Morris 1985; Wells 1983); however, this has not been demonstrated, nor has it been observed. The species has extremely limited habitat preferences; therefore, any type of river modification activity, such as impoundment, channelization, or levee construction would have an immediate and highly negative impact on the species (Wells *et al.* 1983; New and Collins 1991).

Commercial exploitation is considered to be a threat to Hahnel's Amazonian swallowtail (Melisch 2000; Schütz 2000). A survey of German markets found swallowtails to be among the most popular species being sold; Hahnel's Amazonian swallowtails sold for USD $200 per pair (Schütz 2000). Currently, there is limited trade of the species over the internet. The species is not listed in the CITES Appendices, but it is listed on the European Commission's Annex B, which regulates imports of certain species into the EU. It is unclear how this listing has affected trade in the species; however, experts agree that species with restricted distributions or localized populations, such as the Hahnel's Amazonian swallowtail, are more vulnerable to over-collection than those with a wider distribution (K. Brown, Jr., pers. comm. 2004; R. Robbins, pers. comm. 2004).

Hahnel's Amazonian swallowtail does not represent a monotypic genus. The current threats to the species are low in magnitude and non-imminent; therefore, it receives a priority rank of 11.

Kaiser-I-Hind swallowtail (*Teinopalpus imperialis*)

The Kaiser-I-Hind swallowtail is native to the Himalayan regions of Bhutan, China, India, Laos, Myanmar, Nepal, Thailand, and Vietnam (Food and Agriculture Organization (FAO) 2001; Igarashi 2001; Masui and Uehara 2000; Osada *et al.* 1999). This swift species prefers undisturbed montane deciduous forests and flies at altitudes of 1500 and 3050 m (Bond 1964; Igarashi 2001; Tordoff *et al.* 1999). Although the species was first described in 1843, its life history was not well characterized until 1986 (Igarashi and Fukuda 2000). The Kaiser-I-Hind swallowtail produces two broods per year, the first in spring, and another in late summer (Igarashi 2001). Females of the species are much larger than males and males predominate in sex ratio calculations (Bond 1964). Larval host-plants may differ across the species' range, and include: *Magnolia campbellii* in China (Igarashi and Fukuda 2000; Sung and Yan 2005; Yen and Yang 2001); *Magnolia* spp. in Vietnam (Funet 2004); *Daphne* spp. in India, Nepal, and Myanmar (Funet 2004); and *Daphne nipalensis* also in India (Robinson *et al.* 2004).

In 1996, the IUCN categorized the Kaiser-I-Hind swallowtail as a species of Least Concern and it has not been re-evaluated using the 1997 criteria. The species remains in this category in the 2006 IUCN Red List (IUCN 2006). Despite its widespread distribution, local populations are not abundant (Collins and Morris 1985). We were unable to locate current conservation or population status information for Bhutan, Laos and Myanmar, and information for the remaining range countries is limited.

In 1994, with no verified occurrences in 50 years, researchers considered the species to be in immediate danger of extinction in China. However, the species has since been reported in Fuji, Guangxi, Hubei, Jiangsu, Sichuan, and Yunnan Provinces (The United Nations Environment Programme-World Conservation Monitoring Center (UNEP–WCMC) 1999; Igarashi and Fukuda 2000; Sung and Yan 2005). The species is classified by the 2005 China Species Red List as Vulnerable (China Red List 2006).

In India, the species has previously been reported in Assam, Darjeeling, Manipur, Meghalaya, Sikkim, and West Bengal (Collins and Morris 1985; East-Himalaya.com 2006; Prime.travels.com 2006). However, we were unable to confirm the population status of the species in any of the regions except Sikkim, where a sighting was confirmed in 2003 (Ministry of Environment and Forests 2005). The Kaiser-I-Hind swallowtail is listed on Schedule II of the Indian Wildlife Protection Act of 1972 (Collins and Morris 1985; Indian Wildlife Protection Act 2006).

In Nepal, the Kaiser-I-Hind swallowtail has been reported along the southern border of Godavari and in the central region of Pokhara (Anonymous 2002; Environmental Law Alliance Worldwide (E-Law) 2002). The swallowtail reportedly produces one brood in the spring in Nepal , as opposed to the production of the normal two broods elsewhere throughout the species' range (Anonymous 2002). The Kaiser-I-Hind swallowtail is protected by the National Parks and Wildlife Conservation Act of 1973 (E-Law 2002; His Majesty's Government of Nepal (HMGN) 2002; Shreshta 1999).

In Thailand, the species has been reported in Chang Mai province (Pornpitagpan 1999) but we have not been able to find additional locality or status information. The Kaiser-I-Hind swallowtail and 13 other invertebrates are listed under Thailand's Wildlife Reservation and Protection Act of 1992, which makes it illegal to collect wildlife (whether alive or dead) or to have the species in one's possession (FAO 2001; Hongthong 1998; Pornpitagpan 1999).

In Vietnam, the Kaiser-I-Hind swallowtail has been confirmed in three Nature Reserves (Tordoff *et al.* 1999; Trai and Richardson 1999), but there is no domestic regulatory protection for

the species. It is afforded some protection, however, because the Nature Reserves are considered to have low levels of disturbance (Tordoff *et al.* 1999; Trai and Richardson 1999).

Habitat destruction is the greatest threat to this species which prefers undisturbed high altitude habitat. In China and India, the Kaiser-I-Hind swallowtail populations are threatened by habitat modification and destruction due to commercial and illegal logging (Yen and Yang 2001; Maheshwari 2003). In Nepal, the two locations where the species has been confirmed are threatened by habitat disturbance and destruction resulting from mining, fuel wood collection and burning, and grazing animals (Baral *et al.* 2005; E-Law 2002). Nepal's Forest Ministry considers habitat destruction to be a critical threat to all biodiversity, including the Kaiser-I-Hind swallowtail (HMGN 2002). Habitat degradation and loss caused by deforestation and land conversion for agricultural purposes is a primary threat to the species in Thailand (Hongthong 1998; FAO 2001).

Commercial utilization is another threat to the Kaiser-I-Hind swallowtail. The species is valued for its beauty, and thus, its marketability. In China, the Kaiser-I-Hind swallowtail is considered to be more valuable than the Southern tailed birdwing butterfly (*Ornithoptera meridionalis*), which was reportedly valued at U.S. $8,700 per pair, in 2000 (Schütz 2000; Watanabe 1997). According to the Nepal Forestry Ministry, the high commercial value of endangered species on the local and international market may result in local extinctions of many of Nepal's most endangered plants and animals, including this species (HMGN 2002). Unsustainable collection for the souvenir trade is also a primary threat to the species in Thailand (FAO 2001), where villagers from Chang Mai province have nicknamed the Kaiser-I-Hind butterfly the ''motorbike insect'' because a ''villager in this northern province [who is] lucky enough to catch one will earn enough money to buy a motorcycle'' (Pornpitagpan 1999). In Vietnam, Kaiser-I-Hind swallowtails are reported to be among the most valuable of all butterflies (World Bank 2005).

The Kaiser-I-Hind swallowtails (both the Kaiser-I-Hind swallowtail and the Golden Kaiser-I-Hind swallowtail) were listed in CITES Appendix II in 1987 (UNEP–WCMC 2006a). Between 1991 and 2005, 160 Kaiser-I-Hind swallowtail specimens were exported in international trade (UNEP–WCMC 2006b). The United States is the largest importer of the butterflies and China exported the largest percentage of Kaiser-I-Hind swallowtails (both countries account for more than 50 percent of the trade). In addition to China, India and Thailand are the only range countries that have been identified as sources of legal specimens in international trade. There are unconfirmed reports that the Kaiser-I-Hind swallowtail is being captive-bred in Taiwan (Yen and Yang 2001); however, according to CITES trade data, only one export of captive bred specimens has been reported since the 1987 listing, and those were *Teinopalpus* spp. eggs that were exported from the Philippines in 2002. Since 1993, there have been no reported seizures of Kaiser-I-Hind swallowtail in the United States (Office of Law Enforcement, U.S. Fish and Wildlife Service, Arlington, Virginia, pers. comm. 2006).

In summary, the Kaiser-I-Hind swallowtail is native to eight countries in southern and southeast Asia. Population status information is lacking throughout the species' range, except in Nepal and China, where the species is considered vulnerable and rare, respectively. Habitat degradation and conversion threaten the species in at least four range countries (China, India, Nepal, and Thailand), principally because the species prefers undisturbed habitat. The Kaiser-I-Hind swallowtail is collected for commercial trade in at least four range countries (China, India, Nepal, and Thailand), and three range countries have reported limited international trade in the species (China, India, and Thailand). At least three of the range countries (India, Nepal, and Thailand) have additional protective regulatory measures in place for conservation of the species.

The Kaiser-I-Hind swallowtail does not represent a monotypic genus. The current threat to the species is moderate to low in magnitude due to its wide distribution, conservation in international trade afforded by CITES, and additional protective regulatory measures that are in place in at least three of the five species' range countries. Threats are imminent because the Kaiser-I-Hind swallowtail is acutely affected by habitat disturbance and degradation, which is ongoing throughout its range. Additionally, considering the high prices reaped by the species in international trade, collection continues to be a threat to the species. Therefore, it receives a priority rank of 8.

Progress in Revising the Lists

As described in section 4(b)(3)(B)(iii)(II) of the Act, we must show that we are making expeditious progress to add qualified species to the Lists of Endangered and Threatened Wildlife and Plants and to remove species from the lists for which the protections of the Act are no longer necessary. We are making expeditious progress in listing and delisting species as shown by the recent high-priority listing actions: our December 7, 2004, 12-month finding on a petition to list seven foreign species of swallowtail butterflies as threatened or endangered (69 FR 70580); publication of a 12-month petition finding and proposed rule to delist the Mexican bobcat (*Lynx rufus escuinapae*) on May 19, 2005 (70 FR 28895); our September 2, 2005, final rule listing the scimitar-horned oryx, addax, and dama gazelle as endangered (70 FR 52319); our March 29, 2006, final rule listing the Tibetan antelope as endangered (71 FR 15620); and our June 28, 2006, 90-day finding to a petition to delist the Morelet's crocodile (71 FR 36743). We also published a proposed rule to list six foreign birds as endangered on November 23, 2006 for which listing was found to be warranted in our 2004 ANOR (71 FR 67530). In addition to these actions, since publication of the 2004 ANOR, we promulgated a special rule to control the trade of threatened beluga sturgeon (*Huso huso*) on March 4, 2005 (70 FR 10493) and a final rule to manage U.S. captive bred scimitar-horned oryx, addax, and dama gazelle under the Act on September 2, 2005 (70 FR 52310).

Our ability to make progress in adding or removing qualified species to the Lists of Endangered and Threatened Wildlife and Plants is dependent upon resources available. As discussed previously, along with having this responsibility, the DSA must also carry out its other responsibilities under the Act, its responsibilities under CITES, and its responsibilities under the Wild Bird Conservation Act. Currently, more than 50 percent of DSA staff resources are devoted to listing activities under the Act. We will continue to make expeditious progress to add or remove species from the Lists consistent with our available staff and budget resources.

Monitoring

Section 4(b)(3)(C)(iii) of the Act requires us to ''implement a system to monitor effectively the status of all species'' for which we have made a warranted-but-precluded 12-month finding, and to ''make prompt use of the [emergency listing] authority [under section 4(b)(7)] to prevent a significant risk to the well being of any such species.'' For foreign species, the Service's ability to gather information to monitor species is limited. While the

Service welcomes all information relevant to the status of these species, we have no ability to gather data in foreign countries directly and cannot compel another country to provide information. Thus, this ANOR plays a critical role in our monitoring efforts for foreign species. With each ANOR, we request information on the status of the species included in the notice. Information and comments on the annual findings can be submitted at any time. We review all new information received through this process as well as any other new information we obtain using a variety of methods. We collect information from the peer-reviewed scientific literature, unpublished literature, scientific meeting proceedings, and CITES documents (including species proposals and reports from scientific committees). We also obtain information through the permit application processes under CITES, the Act, and the Wild Bird Conservation Act. We also consult with staff members of the Service's Division of International Conservation, the World Conservation Union species specialist groups (IUCN), and attend scientific meetings to obtain current status information for relevant species. As previously stated, if we identify any species for which emergency listing is appropriate, we will make prompt use of the emergency listing authority under section 4(b)(7) of the Act.

Request for Information

We request the submission of any further information on the species in this notice as soon as possible, or whenever it becomes available. We especially seek information: (1) Indicating that we should remove a taxon from warranted or warranted-but-precluded status; (2) indicating that we should remove a species from warranted or warranted-but-precluded status; (3) documenting threats to any of the included species; (4) describing the immediacy or magnitude of threats facing these species; (5) pointing out taxonomic or nomenclatural changes for any of the species; (6) suggesting appropriate common names; or (7) noting any mistakes, such as errors in the indicated historical ranges.

References Cited

A list of the references used to develop this notice is available upon request (see **ADDRESSES** section).

Authors

The primary author of the bird portion of this notice is Marie T. Maltese and the primary author of the invertebrate portion of this notice is Dr. Patricia De Angelis. Both authors are in the Division of Scientific Authority, U.S. Fish and Wildlife Service (see **ADDRESSES** section).

Authority

This notice of review is published under the authority of the Endangered Species Act (16 U.S.C. 1531 *et seq.*).

TABLE 1.—CANDIDATE REVIEW

[C=listing warranted but precluded; L=to be listed]

Birds status		Scientific name	Family	Common name	Historic range
Category	Priority				
C	2	*Podiceps taczanowskii*	Podicipedidae	Junin flightless grebe	Peru.
L	2	*Pterodroma macgillivrayi*	Procellariidae	Fiji petrel	Fiji.
C	2	*Pterodroma axillaris*	Procellariidae	Chatham petrel	Chatham Islands, New Zealand.
L	8	*Pterodroma cookii*	Procellariidae	Cook's petrel	New Zealand.
L	2	*Pterodroma phaeopygia*	Procellariidae	Galapagos petrel	Galapagos Islands, Ecuador.
L	8	*Pterodroma magentae*	Procellariidae	magenta petrel	Chatham Islands, New Zealand.
L	11	*Puffinus heinrothi*	Procellariidae	Heinroth's shearwater	Bismarck Archipelago, Papua New Guinea, Solomon Islands.
L	2	*Leptoptilos dubius*	Ciconiidae	greater adjutant stork	South Asia.
L	2	*Phoenicopterus andinus*	Phoenicopteridae	Andean flamingo	Argentina, Bolivia, Chile, Peru.
C	2	*Mergus octosetaceus*	Anatidae	Brazilian merganser	Brazil.
C	2	*Penelope perspicax*	Craciidae	Cauca guan	Colombia.
C	8	*Pauxi unicornis*	Craciidae	southern helmeted curassow.	Bolivia, Peru.
C	2	*Crax alberti*	Craciidae	blue-billed curassow	Colombia.
C	3	*Tetrao urogallus cantabricus.*	Tetraonidae	Cantabrian capercaillie	Spain.
C	2	*Odontophorus strophium*	Odontophoridae	gorgeted wood-quail	Colombia.
C	2	*Laterallus tuerosi*	Rallidae	Junin rail	Peru.
C	8	*Rallus semiplumbeus*	Rallidae	Bogota rail	Colombia.
C	8	*Porphyrio hochstetteri*	Rallidae	takahe	New Zealand.
C	8	*Haematopus chathamensis*	Haematopodidae	Chatham oystercatcher	Chatham Islands, New Zealand.
C	2	*Rhinoptilus bitorquatus*	Glareolidae	Jerdon's courser	India.
C	2	*Numenius tenuirostris*	Scolopacidae	slender-billed curlew	Africa, Algeria, Bulgaria, southern Europe, Greece, Hungary, Italy, Kazakhstan, Morocco, Romania, Russia, Tunisia, Turkey, Ukraine, and Yugoslavia.
C	2	*Ducula galeata*	Columbidae	Marquesan imperial-pigeon	Marquesas Islands, French Polynesia.
C	2	*Cacatua moluccensis*	Cacatuidae	salmon-crested cockatoo	South Moluccas, Indonesia.

TABLE 1.—CANDIDATE REVIEW—Continued

[C=listing warranted but precluded; L=to be listed]

Birds status		Scientific name	Family	Common name	Historic range
Category	Priority				
C	4	*Cyanoramphus malherbi*	Psittacidae	orange-fronted parakeet	New Zealand.
C	8	*Eunymphicus uvaeensis*	Psittacidae	Uvea parakeet	Uvea, New Caledonia.
C	8	*Ara glaucogularis*	Psittacidae	blue-throated macaw	Bolivia.
C	3	*Neomorphus geoffroyi dulcis.*	Cuculidae	southeastern rufous-vented ground cuckoo.	Brazil.
C	3	*Phaethornis malaris margarettae.*	Trochilidae	Margaretta's hermit	Brazil.
C	3	*Eriocnemis nigrivestis*	Trochilidae	black-breasted puffleg	Ecuador.
C	2	*Eulidia yarrellii*	Trochilidae	Chilean woodstar	Chile, Peru.
C	2	*Acestrura berlepschi*	Trochilidae	Esmeraldas woodstar	Ecuador.
C	8	*Dryocopus galeatus*	Picidae	helmeted woodpecker	Argentina, Brazil, Paraguay.
C	7	*Dendrocopus noguchii*	Picidae	Okinawa woodpecker	Okinawa Island, Japan.
C	11	*Aulacorhynchus huallagae*	Ramphastidae	yellow-browed toucanet	Peru.
C	2	*Cinclodes aricomae*	Furnariidae	royal cinclodes	Bolivia, Peru.
C	2	*Leptasthenura xenothorax*	Furnariidae	white-browed tit-spinetail	Peru.
C	2	*Formicivora erythronotos*	Thamnophilidae	black-hooded antwren	Brazil.
C	2	*Pyriglena atra*	Thamnophilidae	fringe-backed fire-eye	Brazil.
C	2	*Grallaria milleri*	Formicariidae	brown-banded antpitta	Colombia.
C	8	*Scytalopus novacapitalis*	Conopophagidae	Brasilia tapaculo	Brazil.
C	2	*Hemitriccus kaempferi*	Tyrannidae	Kaempfer's tody-tyrant	Brazil.
C	2	*Anairetes alpinus*	Tyrannidae	ash-breasted tit-tyrant	Bolivia, Peru.
C	2	*Phytotoma raimondii*	Phytotomidae	Peruvian plantcutter	Peru.
C	3	*Cichlherminia iherminieri sanctaeluciae.*	Turdidae	St. Lucia forest thrush	St. Lucia Island, West Indies.
C	3	*Acrocephalus caffer aquilonis.*	Sylviidae	Eiao Polynesian warbler	Marquesas Islands, French Polynesia.
C	9	*Bowdleria punctata wilsoni*	Sylviidae	Codfish Island fernbird	Codfish Island, New Zealand.
C	8	*Zosterops luteirostris*	Zosteropidae	Ghizo white-eye	Solomon Islands.
C	11	*Camarhynchus pauper*	Thraupidae	medium tree-finch	Floreana Island, Galapagos Islands, Ecuador.
C	2	*Nemosia rourei*	Thraupidae	cherry-throated tanager	Brazil.
C	8	*Tangara peruviana*	Thraupidae	black-backed tanager	Brazil.
C	12	*Strepera graculina crissalis*	Cracticidae	Lord Howe pied currawong	Lord Howe Islands, New South Wales.

Invertebrates status		Scientific name	Synonyms	Common name	Historic range
Category	Priority				
C	12	*Eurytides lysithous harrisianus.*	*Graphium lysithous harrisianus; Mimoides lysithous harrisianus.*	Harris' mimic swallowtail	Brazil, Paraguay.
C	8	*Eurytides marcellinus*	*Graphium marcellinus; Neographium marcellinus; Protographium marcellinus (nom. inv.); Protesilaus marcellinus.*	Jamaican kite swallowtail	Jamaica.
C	5	*Parides ascanius*	n/a	Fluminense swallowtail	Brazil.
C	11	*Parides hahneli*	n/a	Hahnel's Amazonian swallowtail.	Brazil.
C	8	*Teinopalpus imperialis*	n/a	Kaiser-I-Hind swallowtail	Bhutan, China, India, Laos, Myanmar, Nepal, Thailand, Vietnam.

Dated: April 13, 2007.

H. Dale Hall,

Director, Fish and Wildlife Service.

[FR Doc. E7–7443 Filed 4–20–07; 8:45 am]

BILLING CODE 4310–55–P

Federal Register

Monday,
April 23, 2007

Part III

The President

Executive Order 13430—2007
Amendments to the Manual for Courts-Martial, United States

Federal Register
Vol. 72, No. 77
Monday, April 23, 2007

Presidential Documents

Title 3—

The President

Executive Order 13430 of April 18, 2007

2007 Amendments to the Manual for Courts-Martial, United States

By the authority vested in me as President by the Constitution and the laws of the United States of America, including chapter 47 of title 10, United States Code (Uniform Code of Military Justice, 10 U.S.C. 801–946), and in order to prescribe amendments to the Manual for Courts-Martial, United States, prescribed by Executive Order 12473 of April 13, 1984, as amended, it is hereby ordered as follows:

Section 1. Part II of the Manual for Courts-Martial, United States, is amended as follows:

(a) R.C.M. 703(b)(1) is amended by adding at the end the following new sentences:

''With the consent of both the accused and Government, the military judge may authorize any witness to testify via remote means. Over a party's objection, the military judge may authorize any witness to testify on interlocutory questions via remote means or similar technology if the practical difficulties of producing the witness outweigh the significance of the witness' personal appearance (although such testimony will not be admissible over the accused's objection as evidence on the ultimate issue of guilt). Factors to be considered include, but are not limited to, the costs of producing the witness; the timing of the request for production of the witness; the potential delay in the interlocutory proceeding that may be caused by the production of the witness; the willingness of the witness to testify in person; the likelihood of significant interference with military operational deployment, mission accomplishment, or essential training; and, for child witnesses, the traumatic effect of providing in-court testimony.''

(b) R.C.M. 804 is amended by redesignating paragraphs (b), (c), and (d) as paragraphs (c), (d), and (e), respectively, and inserting the following new paragraph (b):

''(b) *Presence by remote means*. If authorized by the regulations of the Secretary concerned, the military judge may order the use of audiovisual technology, such as videoteleconferencing technology, between the parties and the military judge for purposes of Article 39(a) sessions. Use of such audiovisual technology will satisfy the ''presence'' requirement of the accused only when the accused has a defense counsel physically present at his location. Such technology may include two or more remote sites as long as all parties can see and hear each other.''

(c) R.C.M. 804(c)(2) is redesignated as R.C.M. 804(d)(2) and amended to read as follows:

''(2) *Procedure*. The accused's absence will be conditional upon his being able to view the witness' testimony from a remote location. Normally, transmission of the testimony will include a system that will transmit the accused's image and voice into the courtroom from a remote location as well as transmission of the child's testimony from the courtroom to the accused's location. A one-way transmission may be used if deemed necessary by the military judge. The accused will also be provided private,

contemporaneous communication with his counsel. The procedures described herein shall be employed unless the accused has made a knowing and affirmative waiver of these procedures.''

(d) R.C.M. 805(a) is amended by adding at the end the following new sentence:

''If authorized by regulations of the Secretary concerned, for purposes of Article 39(a) sessions solely, the presence of the military judge at Article 39(a) sessions may be satisfied by the use of audiovisual technology, such as videoteleconferencing technology.''

(e) R.C.M. 805(c) is amended by adding at the end the following new sentences:

''If authorized by regulations of the Secretary concerned, for purposes of Article 39(a) sessions solely, the presence of counsel at Article 39(a) sessions may be satisfied by the use of audiovisual technology, such as videoteleconferencing technology. At least one qualified defense counsel shall be physically present with the accused.''

(f) R.C.M. 914A is amended by deleting the third sentence of paragraph (a).

(g) R.C.M. 914A is further amended by redesignating paragraph (b) as paragraph (c) and inserting the following new paragraph (b):

''(b) *Definition*. As used in this rule, ''remote live testimony'' includes, but is not limited to, testimony by videoteleconference, closed circuit television, or similar technology.''

(h) New Rule R.C.M. 914B is inserted after R.C.M. 914A:

''Rule 914B. Use of remote testimony.

(a) *General procedures*. The military judge shall determine the procedures used to take testimony via remote means. At a minimum, all parties shall be able to hear each other, those in attendance at the remote site shall be identified, and the accused shall be permitted private, contemporaneous communication with his counsel.

(b) *Definition*. As used in this rule, testimony via ''remote means'' includes, but is not limited to, testimony by videoteleconference, closed circuit television, telephone, or similar technology.''

(i) R.C.M. 1001(e)(2)(D) is amended by deleting the ''or'' before ''former testimony'' and inserting '', or testimony by remote means'' after ''former testimony.''

Sec. 2. Part IV of the Manual for Courts-Martial, United States, is amended as follows:

(a) Paragraph 4.c.(6) is amended by redesignating paragraph (f) as paragraph (g) and inserting the following new paragraph (f):

''(f) *Article 119a-attempting to kill an unborn child''*

(b) Paragraph 12a is amended by replacing the word ''Transportation'' with the words ''Homeland Security''.

(c) Paragraph 35a is amended to read as follows:

''(a) Any person subject to this chapter who —

(1) operates or physically controls any vehicle, aircraft, or vessel in a reckless or wanton manner or while impaired by a substance described in section 912a(b) of this title (Article 112a(b)); or

(2) operates or is in actual physical control of any vehicle, aircraft, or vessel while drunk or when the alcohol concentration in the person's blood or breath is equal to or exceeds the applicable limit under subsection (b), shall be punished as a court-martial may direct.

(b)(1) For purposes of subsection (a), the applicable limit on the alcohol concentration in a person's blood or breath is as follows:

(A) In the case of the operation or control of a vehicle, aircraft, or vessel in the United States, such limit is the lesser of —

(i) the blood alcohol content limit under the law of the State in which the conduct occurred, except as may be provided under paragraph (2) for conduct on a military installation that is in more than one State; or

(ii) the blood alcohol content limit specified in paragraph (3).

(B) In the case of the operation or control of a vehicle, aircraft, or vessel outside the United States, the applicable blood alcohol content limit is the blood alcohol content limit specified in paragraph (3) or such lower limit as the Secretary of Defense may by regulation prescribe.

(2) In the case of a military installation that is in more than one State, if those States have different blood alcohol content limits under their respective State laws, the Secretary may select one such blood alcohol content limit to apply uniformly on that installation.

(3) For purposes of paragraph (1), the blood alcohol content limit with respect to alcohol concentration in a person's blood is 0.10 grams of alcohol per 100 milliliters of blood and with respect to alcohol concentration in a person's breath is 0.10 grams of alcohol per 210 liters of breath, as shown by chemical analysis.

(4) In this subsection:

(A) The term ''blood alcohol content limit'' means the amount of alcohol concentration in a person's blood or breath at which operation or control of a vehicle, aircraft, or vessel is prohibited.

(B) The term ''United States'' includes the District of Columbia, the Commonwealth of Puerto Rico, the Virgin Islands, Guam, and American Samoa and the term ''State'' includes each of those jurisdictions.

(d) Paragraph 35b(2)(c) is amended to read as follows:

''(c) the alcohol concentration in the accused's blood or breath equaled to or exceeded the applicable limit under subparagraph (b) of paragraph 35a. [NOTE: If injury resulted add the following element]''

(e) Para 35f is amended to read as follows:

''In that _____ (personal jurisdiction data), did (at/onboard location)(subject matter jurisdiction data, if required), on or about _____ 20____, (in the motor pool area)(near the Officer's Club)(at the intersection of _____ and _____)(while in the Gulf of Mexico)(while in flight over North America) physically control [a vehicle, to wit: (a truck)(a passenger car)(_____)] [an aircraft, to wit: (an AH 64 helicopter)(an F 14 A fighter)(a KC 135 tanker)(_____)][a vessel, to wit: (the aircraft carrier USS)(the Coast Cutter)(_____)], [while drunk][while impaired by _____][while the alcohol concentration in his (blood or breath equaled or exceeded the applicable limit under subparagraph (b) of paragraph 35a) as shown by chemical analysis][in a (reckless)(wanton) manner by (attempting to pass another vehicle on a sharp curve)(by ordering that the aircraft be flown below the authorized altitude)][and did thereby cause said (vehicle)(aircraft)(vessel) to (strike and)(injure _____)].''

(f) By inserting the new paragraph 44a:

''44a. Article 119a—Death or injury of an unborn child

a. *Text.*

(a)(1) Any person subject to this chapter who engages in conduct that violates any of the provisions of law listed in subsection (b) and thereby causes the death of, or bodily injury (as defined in section 1365 of title 18 to, a child who is in utero at the time the conduct takes place, is guilty of a separate offense under this section and shall, upon conviction, be punished by such punishment, other than death, as a court-martial

may direct, which shall be consistent with the punishments prescribed by the President for that conduct had that injury or death occurred to the unborn child's mother.

(2) An offense under this section does not require proof that —

(i) the person engaging in the conduct had knowledge or should have had knowledge that the victim of the underlying offense was pregnant; or

(ii) the accused intended to cause the death of, or bodily injury to, the unborn child.

(3) If the person engaging in the conduct thereby intentionally kills or attempts to kill the unborn child, that person shall, instead of being punished under paragraph (1), be punished as provided under sections 880, 918, and 919(a) of this title (articles 80, 118, and 119(a)) for intentionally killing or attempting to kill a human being.

(4) Notwithstanding any other provision of law, the death penalty shall not be imposed for an offense under this section.

(b) The provisions referred to in subsection (a) are sections 918, 919(a), 919(b)(2), 920(a), 922, 924, 926, and 928 of this title (articles 118, 119(a), 119(b)(2), 120(a), 122, 124, 126, and 128).

(c) Nothing in this section shall be construed to permit the prosecution

(1) of any person authorized by state or federal law to perform abortions for conduct relating to an abortion for which the consent of the pregnant woman, or a person authorized by law to act on her behalf, has been obtained or for which such consent is implied by law;

(2) of any person for any medical treatment of the pregnant woman or her unborn child; or

(3) of any woman with respect to her unborn child.

(d) As used in this section, the term ''unborn child'' means a child in utero, and the term ''child in utero'' or ''child who is in utero'' means a member of the species homo sapiens, at any stage of development, who is carried in the womb.

b. *Elements*.

(1) *Injuring an unborn child*.

(a) That the accused was engaged in the [(murder (article 118)), (voluntary manslaughter (article 119(a))), (involuntary manslaughter (article 119(b)(2))), (rape (article 120)), (robbery (article 122)), (maiming (article 124)), (assault (article 128)), of] or [burning or setting afire, as arson (article 126), of (a dwelling inhabited by) (a structure or property (known to be occupied by) (belonging to))] a woman;

(b) That the woman was then pregnant; and

(c) That the accused thereby caused bodily injury to the unborn child of that woman.

(2) *Killing an unborn child*.

(a) That the accused was engaged in the [(murder (article 118)), (voluntary manslaughter (article 119(a))), (involuntary manslaughter (article 119(b)(2))), (rape (article 120)), (robbery (article 122)), (maiming (article 124)), (assault (article 128)), of] or [burning or setting afire, as arson (article 126), of (a dwelling inhabited by) (a structure or property known to (be occupied by) (belong to))] a woman;

(b) That the woman was then pregnant; and

(c) That the accused thereby caused the death of the unborn child of that woman.

(3) *Attempting to kill an unborn child*.

(a) That the accused was engaged in the [(murder (article 118)), (voluntary manslaughter (article 119(a))), (involuntary manslaughter (article 119(b)(2))), (rape (article 120)), (robbery (article 122)), (maiming (article 124)), (assault (article 128)), of] or [burning or setting afire, as arson (article 126), of (a dwelling inhabited by) (a structure or property (known to be occupied by) (belonging to))] a woman;

(b) That the woman was then pregnant; and

(c) That the accused thereby intended and attempted to kill the unborn child of that woman.

(4) *Intentionally killing an unborn child*.

(a) That the accused was engaged in the [(murder (article 118)), (voluntary manslaughter (article 119(a))), (involuntary manslaughter (article 119(b)(2))), (rape (article 120)), (robbery (article 122)), (maiming (article 124)), (assault (article 128)), of] or [burning or setting afire, as arson (article 126), of (a dwelling inhabited by) (a structure or property (known to be occupied by) (belonging to))] a woman;

(b) That the woman was then pregnant; and

(c) That the accused thereby intentionally killed the unborn child of that woman.

c. *Explanation*.

(1) *Nature of offense*. This article makes it a separate, punishable crime to cause the death of or bodily injury to an unborn child while engaged in arson (article 126, UCMJ); murder (article 118, UCMJ); voluntary manslaughter (article 119(a), UCMJ); involuntary manslaughter (article 119(b)(2), UCMJ); rape (article 120(a), UCMJ); robbery (article 122, UCMJ); maiming (article 124, UCMJ); or assault (article 128, UCMJ) against a pregnant woman. For all underlying offenses, except arson, this article requires that the victim of the underlying offense be the pregnant mother. For purposes of arson, the pregnant mother must have some nexus to the arson such that she sustained some ''bodily injury'' due to the arson. For the purposes of this article the term ''woman'' means a female of any age. This article does not permit the prosecution of any —

(a) person for conduct relating to an abortion for which the consent of the pregnant woman, or a person authorized by law to act on her behalf, has been obtained or for which such consent is implied by law;

(b) person for any medical treatment of the pregnant woman or her unborn child; or

(c) woman with respect to her unborn child.

(2) The offenses of ''injuring an unborn child'' and ''killing an unborn child'' do not require proof that —

(a) the person engaging in the conduct (the accused) had knowledge or should have had knowledge that the victim of the underlying offense was pregnant; or

(b) the accused intended to cause the death of, or bodily injury to, the unborn child.

(3) The offense of ''attempting to kill an unborn child'' requires that the accused intended by his conduct to cause the death of the unborn child (See paragraph b(3)(c) above).

(4) *Bodily injury*. For the purpose of this offense, the term ''bodily injury'' is that which is provided by section 1365 of title 18, to wit: a cut, abrasion, bruise, burn, or disfigurement; physical pain; illness; impairment of the function of a bodily member, organ, or mental faculty; or any other injury to the body, no matter how temporary.

(5) *Unborn child*. ''Unborn child'' means a child in utero or a member of the species homo sapiens who is carried in the womb, at any stage of development, from conception to birth.

d. *Lesser included offenses.*

(1) *Killing an unborn child.* Article 119a—injuring an unborn child

(2) *Intentionally killing an unborn child.*

(a) Article 119a—killing an unborn child

(b) Article 119a—injuring an unborn child

(c) Article 119a—attempts (attempting to kill an unborn child)

e. *Maximum punishment.*

The maximum punishment for (1) *Injuring an unborn child*; (2) *Killing an unborn child*; (3) *Attempting to kill an unborn child*; or (4) *Intentionally killing an unborn child* is such punishment, other than death, as a court-martial may direct, but shall be consistent with the punishment had the bodily injury, death, attempt to kill, or intentional killing occurred to the unborn child's mother.

f. *Sample specifications.*

(1) *Injuring an unborn child.*

In that _____(personal jurisdiction data), did (at/on board—location), (subject-matter jurisdiction data, if required), on or about _____ 20_____, cause bodily injury to the unborn child of , a pregnant woman, by engaging in the [(murder) (voluntary manslaughter) (involuntary manslaughter) (rape) (robbery) (maiming) (assault) of] [(burning) (setting afire) of (a dwelling inhabited by) (a structure or property known to (be occupied by) (belong to))] that woman.

(2) *Killing an unborn child.*

In that _____(personal jurisdiction data), did (at/on board—location), (subject-matter jurisdiction data, if required), on or about _____ 20_____, cause the death of the unborn child of , a pregnant woman, by engaging in the [(murder) (voluntary manslaughter) (involuntary manslaughter) (rape) (robbery) (maiming) (assault) of] [(burning) (setting afire) of (a dwelling inhabited by) (a structure or property known to (be occupied by) (belong to))] that woman.

(3) *Attempting to kill an unborn child.*

In that _____(personal jurisdiction data), did (at/on board—location), (subject-matter jurisdiction data, if required), on or about _____ 20_____, attempt to kill the unborn child of , a pregnant woman, by engaging in the [(murder) (voluntary manslaughter) (involuntary manslaughter) (rape) (robbery) (maiming) (assault) of] [(burning) (setting afire) of (a dwelling inhabited by) (a structure or property known to (be occupied by) (belong to))] that woman.

(4) *Intentionally killing an unborn child.*

In that _____(personal jurisdiction data), did (at/on board—location), (subject-matter jurisdiction data, if required), on or about _____ 20_____, intentionally kill the unborn child of , a pregnant woman, by engaging in the [(murder) (voluntary manslaughter) (involuntary manslaughter) (rape) (robbery) (maiming) (assault) of] [(burning) (setting afire) of (a dwelling inhabited by) (a structure or property known to (be occupied by) (belong to))] that woman.''

(g) By inserting the new paragraph 45a to read:

''**45a. Article 120a Stalking**

a. *Text*

(a) Any person subject to this section:

(1) who wrongfully engages in a course of conduct directed at a specific person that would cause a reasonable person to fear death or bodily harm, including sexual assault, to himself or herself or a member of his or her immediate family;

(2) who has knowledge, or should have knowledge, that the specific person will be placed in reasonable fear of death or bodily harm, including sexual assault, to himself or herself or a member of his or her immediate family; and

(3) whose acts induce reasonable fear in the specific person of death or bodily harm, including sexual assault, to himself or herself or to a member of his or her immediate family; is guilty of stalking and shall be punished as a court-martial may direct.

(b) In this section:

(1) The term ''course of conduct'' means:

(A) a repeated maintenance of visual or physical proximity to a specific person; or

(B) a repeated conveyance of verbal threat, written threats, or threats implied by conduct, or a combination of such threats, directed at or towards a specific person.

(2) The term ''repeated,'' with respect to conduct, means two or more occasions of such conduct.

(3) The term ''immediate family,'' in the case of a specific person, means a spouse, parent, child, or sibling of the person, or any other family member, relative, or intimate partner of the person who regularly resides in the household of the person or who within the six months preceding the commencement of the course of conduct regularly resided in the household of the person.

b. *Elements*.

(1) That the accused wrongfully engaged in a course of conduct directed at a specific person that would cause a reasonable person to fear death or bodily harm to himself or herself or a member of his or her immediate family;

(2) That the accused had knowledge, or should have had knowledge, that the specific person would be placed in reasonable fear of death or bodily harm to himself or herself or a member of his or her immediate family; and

(3) That the accused's acts induced reasonable fear in the specific person of death or bodily harm to himself or herself or to a member of his or her immediate family.

c. *Explanation*. See Paragraph 54.c(1)(a) for an explanation of ''bodily harm''.

d. *Lesser included offenses*. Article 80—attempts.

e. *Maximum punishment*. Dishonorable discharge, forfeiture of all pay and allowances, and confinement for 3 years.

f. *Sample Specification*.

In that _____(personal jurisdiction data), who (knew)(should have known) that _____ would be placed in reasonable fear of (death)(bodily harm) to (himself) (herself) (_____, a member of his or her immediate family) did (at/on board—location), (subject-matter jurisdiction data, if required), (on or about _____ 20_____)(from about _____to about _____ 20____), wrongfully engage in a course of conduct directed at _____, to wit: _____ _____ thereby inducing in _____, a reasonable fear of (death)(bodily harm) to (himself)(herself) (_____, a member of his or her immediate family).''

Sec. 3. Part V of the Manual for Courts-Martial, United States, is amended as follows:

(a) Paragraph 5.c.(8) is amended by replacing the word ''foreign'' with the word ''hardship.''

(b) Paragraph 7(e) is amended by replacing the word ''Transportation'' with the words ''Homeland Security''.

Sec. 4. Part IV of the Manual for Courts-Martial, United States, is amended by replacing the word ''Transportation'' with the words ''Homeland Security.''

Sec. 5. These amendments shall take effect 30 days from the date of this order.

(a) Nothing in these amendments shall be construed to make punishable any act done or omitted prior to the effective date of this order that was not punishable when done or omitted.

(b) Nothing in these amendments shall be construed to invalidate any nonjudicial punishment proceedings, restraint, investigation, referral of charges, trial in which arraignment occurred, or other action begun prior to the effective date of this order, and any such nonjudicial punishment, restraint, investigation, referral of charges, trial, or other action may proceed in the same manner and with the same effect as if these amendments had not been prescribed.

THE WHITE HOUSE,
April 18, 2007.

[FR Doc. 07–2027
Filed 4–20–07; 8:45 am]
Billing code 3195–01–P

Reader Aids

Federal Register

Vol. 72, No. 77

Monday, April 23, 2007

CUSTOMER SERVICE AND INFORMATION

Federal Register/Code of Federal Regulations	
General Information, indexes and other finding aids	**202–741–6000**
Laws	**741–6000**
Presidential Documents	
Executive orders and proclamations	**741–6000**
The United States Government Manual	**741–6000**
Other Services	
Electronic and on-line services (voice)	**741–6020**
Privacy Act Compilation	**741–6064**
Public Laws Update Service (numbers, dates, etc.)	**741–6043**
TTY for the deaf-and-hard-of-hearing	**741–6086**

ELECTRONIC RESEARCH

World Wide Web

Full text of the daily Federal Register, CFR and other publications is located at: **http://www.gpoaccess.gov/nara/index.html**

Federal Register information and research tools, including Public Inspection List, indexes, and links to GPO Access are located at: **http://www.archives. gov/federal__register**

E-mail

FEDREGTOC-L (Federal Register Table of Contents LISTSERV) is an open e-mail service that provides subscribers with a digital form of the Federal Register Table of Contents. The digital form of the Federal Register Table of Contents includes HTML and PDF links to the full text of each document.

To join or leave, go to **http://listserv.access.gpo.gov** and select *Online mailing list archives, FEDREGTOC-L, Join or leave the list (or change settings);* then follow the instructions.

PENS (Public Law Electronic Notification Service) is an e-mail service that notifies subscribers of recently enacted laws.

To subscribe, go to **http://listserv.gsa.gov/archives/publaws-l.html** and select *Join or leave the list (or change settings);* then follow the instructions.

FEDREGTOC-L and **PENS** are mailing lists only. We cannot respond to specific inquiries.

Reference questions. Send questions and comments about the Federal Register system to: **fedreg.info@nara.gov**

The Federal Register staff cannot interpret specific documents or regulations.

FEDERAL REGISTER PAGES AND DATE, APRIL

15597–15804 2
15805–16260 3
16261–16694 4
16695–16984 5
16985–17352 6
17353–17788 9
17789–18102 10
18103–18342 11
18343–18560 12
18561–18846 13
18847–19092 16
19093–19374 17
19375–19660 18
19661–19780 19
19781–20028 20
20029–20220 23

CFR PARTS AFFECTED DURING APRIL

At the end of each month, the Office of the Federal Register publishes separately a List of CFR Sections Affected (LSA), which lists parts and sections affected by documents published since the revision date of each title.

2 CFR

1880 19783

3 CFR

Administrative Orders:
Presidential Determinations:
No. 2007-16 of April 11, 2007 19781
Proclamations:
8119 16255
8120 17785
8121 17787
8122 18341
8123 19087
8124 19089
8125 19091
8126 19779
Executive Orders:
12473 (See EO 13430) 20213
13417 (See 13429).....18101
13429 18101
13430 20213
Administrative Orders:
Memorandums:
Memorandum of June 2, 2005 (See Memo. of April 10, 2007) 18561
Memorandum of December 16, 2005 (See Memo. of April 10, 2007).....18561
Memorandum of March 23, 2007 18103
Memorandum of April 10, 2007 18561
Notices:
Notice of March 30, 2007 15803
Notice of April 1, 2007 16259

5 CFR

550 19093
890 19099
2634 16985
2635 16985
2636 16985
3201 19375
Proposed Rules:
1820 18406
9501 19126

6 CFR

27 17688
Ch. X.....17789
Proposed Rules:
37 20061

7 CFR

301 15597
319 15805
762 17353
915 16261
916 18847
917 18847
922 16263
926 16265
932 18343
946 17792
959 17360
985 18345
989 17362
1207 16267
Proposed Rules:
28 19674
925 18922
959 17037
1942 19807
4284 19807
3560 16730

8 CFR

103 19100
204 19100
214 .....18856, 19100
245 19100
245a 19100

9 CFR

105 17795
115 17795
202 19108
Proposed Rules:
1 17814

10 CFR

72 19109
300 15598
490 18860
Proposed Rules:
50 16731
73 17440

11 CFR

104 16695
111 16695

12 CFR

4 17798
204 16987
208 17798
211 17798
337 17798
347 17798
563 17798
563e 19109
611 16699
612 16699
614 16699
615 16699
618 16699
619 16699

620....16699
630....16699
652....15812
655....15812
915....15600
Proposed Rules:
40....16875
216....16875
332....16875
573....16875
701....20061
708b....20067
716....16875
915....15627

13 CFR

102....17367
120....18349

14 CFR

1....19661
25....18365, 18372, 18861, 20029
39....15603, 15812, 15814, 15816, 15818, 15820, 15822, 16699, 16701, 16703, 16990, 16998, 17376, 17379, 18375, 18377, 18380, 18563, 18565, 18566, 18862, 19110, 19380, 19785, 19788, 19790, 20030
61....18556
63....18556
65....18556
71....15824, 15825, 16707, 16708, 16709, 16710, 17804, 18383, 18568
91....16710, 19382
95....18384
97....15825, 18865, 18867
121....19793
135....19793
136....19382
187....18556
204....20034
331....17381
399....20034
401....17001
404....17001
405....17001
406....17001
413....17001
415....17001
420....17001
431....17001
437....17001
1260....19783
1265....19783
1274....19783
Proposed Rules:
23....18136
25....17441, 18136, 18412, 18597, 18923
33....18136, 18148
35....18136
39....15633, 15635, 15850, 16287, 16289, 16741, 16744, 16747, 16749, 17042, 17045, 17443, 18155, 18413, 18415, 18598, 18600, 18925, 19818, 19823, 19826, 20070, 20072, 20075
61....18092
65....18092
67....18092
71....17445, 20078
183....18092

15 CFR

19....18869
21....18869
22....18869
303....16712
902....18105, 20036

16 CFR

Proposed Rules:
313....16875

17 CFR

30....17989
140....16269
145....16269
200....16934
232....16934
240....16934
249....16934
Proposed Rules:
1....15637, 18316
3....15637, 18316
4....15637, 18316
15....15637, 18316
160....16875
166....15637, 18316
248....16875

18 CFR

35....18569, 18880, 19112
37....18569, 18880, 19112
40....16416
101....16716, 17393
381....19116
388....18572
1310....18118

19 CFR

123....18574

20 CFR

404....16720
416....16720

21 CFR

179....17394
510....19665
520....16270, 19796
522....19665, 19796
524....18118
556....19797
558....16270, 19665, 19797
803....17397
814....17397
820....17397
821....17397
822....17397
866....15828
874....17397
886....17397
1002....17397
1005....17397
1020....17397
1300....17401
1310....20039
1313....17401
Proposed Rules:
179....16291

22 CFR

126....15830
504....19798

23 CFR

Proposed Rules:
637....17447

24 CFR

92....16678
115....19070
234....16688
1000....20018

26 CFR

1....16878, 17804, 18386, 18575, 19234
11....16878
Proposed Rules:
1....17814, 18417
20....20080

28 CFR

500....16271
501....16271

29 CFR

4022....18576
4044....18576
Proposed Rules:
570....19328, 19337
1910....18792

30 CFR

250....18577
938....19117
Proposed Rules:
291....17047
946....17449, 17452

31 CFR

82....18880
538....15831
560....15831

32 CFR

310....18758
706....18119
Proposed Rules:
112....19136
199....18927
213....19411
232....18157

33 CFR

100....15832, 17024, 18120, 18122, 20047, 20049, 20050
117....18884, 18885, 18887, 19666, 20050
160....17409
165....15834, 15837, 16275, 16726, 17024, 18124, 18126, 18585, 18887, 18889, 20051, 20053
Proposed Rules:
100....17062, 17456, 18170, 18422, 18424
117....15852, 16752, 17065
147....18929
165....16754, 17458, 18172, 18174, 18176, 18931, 18933, 18935, 19675, 20087, 20089

34 CFR

200....17748
300....17748

36 CFR

Proposed Rules:
261....15641
1192....18179

37 CFR

1....18892
2....18907
7....18907
41....18892
Proposed Rules:
202....16306
381....19138

38 CFR

4....16728
17....18128
21....16962, 19383

39 CFR

20....16604
111....18388
Proposed Rules:
111....18179

40 CFR

52....15839, 18389, 18391, 18394, 19383, 19801
62....17025
63....19385
65....19385
70....19804
174....16277
180....16281, 18128
261....17027
Proposed Rules:
52....17461, 18426, 18427, 18428, 18434, 18602, 19144, 19413, 19424, 19435, 19828, 19829, 19834
62....17068
63....16636, 19150
70....19838
81....18434, 18602, 19413, 19424, 19435
92....15938
94....15938
152....16312, 18191
156....16312, 18191
167....16312, 18191
168....16312, 18191
169....16312, 18191
172....16312, 18191
174....16312, 18191, 19590, 19640
180....17068
1033....15938
1039....15938
1042....15938
1065....15938
1068....15938

41 CFR

302-17....17410
Proposed Rules:
102-38....15854

42 CFR

405....18909
410....18909
411....17992, 18909
414....17992, 18909
415....18909
424....18909

43 CFR

Proposed Rules:
10....18192

44 CFR

65....18587
67....17413, 17426

Proposed Rules:
67.....17463, 19838

46 CFR

501.....15613

47 CFR

73.....16283, 19387
90.....19387
301.....18400
Proposed Rules:
73.....16315, 19447
76.....19448

48 CFR

731.....19668
752.....19668
1523.....18401
1552.....18401
Proposed Rules:
2.....20092
3.....20092
4.....20092
12.....20092
14.....20092
15.....20092
16.....20092
19.....20092
27.....20092
30.....20092
31.....20092
32.....20092
42.....20092
44.....20092
49.....20092
52.....20092

49 CFR

23.....15614
26.....15614
192.....20055
211.....17433
571.....17236
585.....17236
801.....18914
1002.....17032
Proposed Rules:
39.....18614
107.....18446
171.....18446
172.....18446
173.....18446
176.....18446
178.....18446
180.....18446
385.....18615
386.....18615
390.....18615
392.....18615
393.....18615
396.....18615
544.....17465
1300.....16316
1313.....16316

50 CFR

17.....16284, 18518
92.....18318
229.....19671
270.....18105
300.....18404, 19122
622 .....15617, 18134, 18593
648 .....17806, 17807, 18594, 20036
660.....19390
665.....19123
679 .....15848, 18135, 18595, 18920, 20060
Proposed Rules:
17 .....15857, 16756, 20184
20.....18328
223.....18616
224.....18616, 19854
300.....17071
635.....16318
648 .....17076, 17085, 18193, 18937, 18940
660 .....17469, 19453, 19862
679.....18943, 19454

REMINDERS

The items in this list were editorially compiled as an aid to Federal Register users. Inclusion or exclusion from this list has no legal significance.

RULES GOING INTO EFFECT APRIL 23, 2007

AGRICULTURE DEPARTMENT

Agricultural Marketing Service

Nectarines and peaches grown in California; published 3-23-07

BROADCASTING BOARD OF GOVERNORS

Legal proceedings; testimony by employees, production of officials records, and disclosure of official information; published 4-20-07

ENVIRONMENTAL PROTECTION AGENCY

Air quality implementation plans; approval and promulgation; various States and State operating permits programs:

Missouri; published 2-21-07

Solid wastes:

State underground storage tank program approvals—

Colorado; published 3-22-07

FEDERAL COMMUNICATIONS COMMISSION

Radio stations; table of assignments:

California; published 3-28-07

Wyoming; published 3-28-07

HEALTH AND HUMAN SERVICES DEPARTMENT

Food and Drug Administration

Administrative rulings and decisions:

Ozone-depleting substances use; essential-use designations; removed; published 12-7-06

INTERIOR DEPARTMENT

National Park Service

Special regulations:

Boating and water use activities; published 3-23-07

JUSTICE DEPARTMENT

Drug Enforcement Administration

Schedules of controlled substances:

N-phenethyl-4-piperidone; control as list I chemical due to use for illicit manufacture of fentanyl; published 4-23-07

LABOR DEPARTMENT

Mine Safety and Health Administration

Mine Improvement and New Emergency Response Act; implementation:

Civil penalties assessment; criteria and procedures; published 3-22-07

TRANSPORTATION DEPARTMENT

Federal Aviation Administration

Airworthiness directives:

Eurocopter France; published 3-19-07

General Electric Co.; published 4-6-07

TREASURY DEPARTMENT

Alcohol and Tobacco Tax and Trade Bureau

Alcohol; viticultural area designations:

Green Valley of Russian River Valley, Sonoma County, CA; published 3-23-07

COMMENTS DUE NEXT WEEK

AGRICULTURE DEPARTMENT

Agricultural Marketing Service

Avocados grown in South Florida; comments due by 4-30-07; published 3-30-07 [FR E7-05792]

Cotton classing, testing, and standards:

Classification services to growers; 2007 user fees; comments due by 5-4-07; published 4-19-07 [FR E7-07401]

Grapes grown in southeastern California; comments due by 5-1-07; published 4-16-07 [FR E7-07179]

Popcorn promotion, research, and consumer information order; section 610 review; comments due by 4-30-07; published 2-27-07 [FR E7-03262]

AGRICULTURE DEPARTMENT

Animal and Plant Health Inspection Service

National Veterinary Accreditation Program; comments due by 4-30-07; published 2-27-07 [FR E7-03256]

Plant-related quarantine, domestic:

Phytophthora ramorum; comments due by 4-30-07; published 2-27-07 [FR 07-00892]

AGRICULTURE DEPARTMENT

Rural Business-Cooperative Service

Rural Business Investment Program; administrative provisions; comments due by 4-30-07; published 3-29-07 [FR 07-01530]

AGRICULTURE DEPARTMENT

Rural Utilities Service

Rural Business Investment Program; administrative provisions; comments due by 4-30-07; published 3-29-07 [FR 07-01530]

COMMERCE DEPARTMENT

National Oceanic and Atmospheric Administration

Fishery conservation and management:

Alaska; fisheries of Exclusive Economic Zone—

Gulf of Alaska rockfish; comments due by 4-30-07; published 4-16-07 [FR E7-07193]

North Pacific groundfish; comments due by 4-30-07; published 3-29-07 [FR E7-05826]

Atlantic highly migratory species—

Atlantic bluefin tuna; comments due by 5-4-07; published 4-4-07 [FR E7-06259]

Northeastern United States fisheries—

Northeast multispecies; comments due by 5-1-07; published 4-16-07 [FR 07-01882]

Northeast multispecies; comments due by 5-1-07; published 4-16-07 [FR 07-01883]

Western Pacific fisheries—

Western Pacific precious corals fisheries; control date; comments due by 5-1-07; published 3-2-07 [FR E7-03702]

DEFENSE DEPARTMENT

Secretary of Defense Office files; historical research policies and procedures; comments due by 4-30-07; published 2-28-07 [FR E7-03021]

ENERGY DEPARTMENT

Federal Energy Regulatory Commission

Electric utilities (Federal Power Act):

Wave, current, and instream new technology hydropower projects; preliminary permits; interim policy statement; comments due by 4-30-07; published 3-1-07 [FR E7-03549]

ENVIRONMENTAL PROTECTION AGENCY

Air pollutants, hazardous; national emission standards:

Acrylic and modacrylic fibers production, carbon black production, lead acid battery manufacturing, wood preserving, etc.; comments due by 5-4-07; published 4-4-07 [FR E7-05790]

General provisions; comments due by 5-4-07; published 3-5-07 [FR E7-03758]

Shipbuilding and ship repair operations; comments due by 4-30-07; published 2-27-07 [FR E7-03311]

Air pollution control; new motor vehicles and engines:

Heavy duty engines; onboard diagnostic systems and requirements; comments due by 5-4-07; published 3-22-07 [FR E7-05266]

Air quality implementation plans; approval and promulgation; various States:

Indiana; comments due by 4-30-07; published 3-29-07 [FR E7-05655]

Ohio; comments due by 4-30-07; published 3-29-07 [FR E7-05809]

Pesticides; tolerances in food, animal feeds, and raw agricultural commodities:

2-propenoic acid, methyl ester, polymer with ethenyl acetate, hydrolyzed, sodium salts; comments due by 4-30-07; published 2-28-07 [FR E7-03118]

Correction; comments due by 4-30-07; published 3-5-07 [FR Z7-03118]

Halosulfuron-methyl; comments due by 4-30-07; published 2-28-07 [FR E7-03205]

Orthosulfamuron; comments due by 4-30-07; published 2-28-07 [FR 07-00898]

Sethoxydim; comments due by 4-30-07; published 2-28-07 [FR E7-03010]

Toxic substances:

Significant new uses—

2-Thiazolidinone, etc.; comments due by 4-30-

07; published 3-29-07 [FR E7-05797]

GENERAL SERVICES ADMINISTRATION

Federal Management Regulation:

Federal asset sales; personal property sales; comments due by 5-3-07; published 4-3-07 [FR E7-06068]

HEALTH AND HUMAN SERVICES DEPARTMENT

Children and Families Administration

Child Care and Development Fund:

Error rate reporting; comments due by 5-1-07; published 3-2-07 [FR E7-03664]

HEALTH AND HUMAN SERVICES DEPARTMENT

Centers for Medicare & Medicaid Services

Medicare:

Appeals process; provider and supplier applications for enrollment or renewal; determinations; comments due by 5-1-07; published 3-2-07 [FR 07-00870]

HOMELAND SECURITY DEPARTMENT

Coast Guard

Ports and waterways safety; regulated navigation areas, safety zones, security zones, etc.:

Great Lakes Naval Training Center Harbor, Chicago, IL; comments due by 5-4-07; published 4-19-07 [FR E7-07416]

Lower Colorado River, Laughlin, NV; comments due by 4-30-07; published 3-8-07 [FR E7-04114]

INTERIOR DEPARTMENT

Fish and Wildlife Service

Endangered and threatened species:

Critical habitat designations—

Coastal California gnatcatcher and San Diego fairy shrimp; comments due by 5-3-07; published 4-3-07 [FR E7-05743]

INTERNATIONAL TRADE COMMISSION

African Growth and Opportunity Act; implementation:

Sub-Saharan African countries; investigations with respect to commercial availability of textile fabric and yarn; comments due by 4-30-07; published 2-27-07 [FR E7-03387]

JUSTICE DEPARTMENT

Sex Offender Registration and Notification Act; applicability; comments due by 4-30-07; published 2-28-07 [FR E7-03063]

LIBRARY OF CONGRESS

Copyright Office, Library of Congress

Copyright Office and Procedures:

Copyright claims, registration; renewals; comments due by 5-4-07; published 4-4-07 [FR E7-06174]

SECURITIES AND EXCHANGE COMMISSION

Securities:

Persistent fails to deliver in certain equity securities; amendments (Regulation SHO); comments due by 4-30-07; published 3-30-07 [FR E7-05870]

Self-regulatory organizations; proposed rule changes; comments due by 4-30-07; published 3-1-07 [FR 07-00917]

SOCIAL SECURITY ADMINISTRATION

Social security benefits and supplemental security income:

Federal old age, survivors, and disability insurance, and aged, blind, and disabled—

Methods for conducting personal conferences when waiver of recovery of Title II or XVI overpayment cannot be approved; comments due by 5-4-07; published 3-5-07 [FR E7-03782]

TRANSPORTATION DEPARTMENT

Federal Aviation Administration

Airworthiness directives:

Airbus; comments due by 4-30-07; published 3-30-07 [FR E7-05908]

APEX Aircraft; comments due by 5-2-07; published 4-2-07 [FR E7-06015]

Boeing; comments due by 4-30-07; published 3-15-07 [FR E7-04742]

Bombardier; comments due by 4-30-07; published 3-29-07 [FR E7-05668]

Diamond Aircraft Industries GmbH; comments due by 5-2-07; published 4-2-07 [FR E7-06012]

Gulfstream; comments due by 5-3-07; published 4-3-07 [FR E7-05898]

Pratt & Whitney; comments due by 4-30-07; published 3-1-07 [FR E7-03561]

Class D and E airspace; comments due by 4-30-07; published 3-30-07 [FR 07-01545]

Class E airspace; comments due by 4-30-07; published 3-16-07 [FR 07-01208]

TREASURY DEPARTMENT

Internal Revenue Service

Income taxes:

Escrow accounts, trusts, and other funds used during deferred exchanges of like-kind property; comments due by 5-4-07; published 3-20-07 [FR E7-04968]

LIST OF PUBLIC LAWS

This is a continuing list of public bills from the current session of Congress which have become Federal laws. It may be used in conjunction with "P L U S" (Public Laws Update Service) on 202–741–6043. This list is also available online at *http://www.archives.gov/federal-register/laws.html*.

The text of laws is not published in the **Federal Register** but may be ordered in "slip law" (individual pamphlet) form from the Superintendent of Documents, U.S. Government Printing Office, Washington, DC 20402 (phone, 202–512–1808). The text will also be made available on the Internet from GPO Access at *http://www.gpoaccess.gov/plaws/index.html*. Some laws may not yet be available.

S. 494/P.L. 110–17

NATO Freedom Consolidation Act of 2007 (Apr. 9, 2007; 121 Stat. 73)

Last List March 30, 2007

Public Laws Electronic Notification Service (PENS)

PENS is a free electronic mail notification service of newly enacted public laws. To subscribe, go to *http://listserv.gsa.gov/archives/publaws-l.html*

Note: This service is strictly for E-mail notification of new laws. The text of laws is not available through this service. **PENS** cannot respond to specific inquiries sent to this address.

CFR CHECKLIST

This checklist, prepared by the Office of the Federal Register, is published weekly. It is arranged in the order of CFR titles, stock numbers, prices, and revision dates.

An asterisk (*) precedes each entry that has been issued since last week and which is now available for sale at the Government Printing Office.

A checklist of current CFR volumes comprising a complete CFR set, also appears in the latest issue of the LSA (List of CFR Sections Affected), which is revised monthly.

The CFR is available free on-line through the Government Printing Office's GPO Access Service at http://www.gpoaccess.gov/cfr/index.html. For information about GPO Access call the GPO User Support Team at 1-888-293-6498 (toll free) or 202-512-1530.

The annual rate for subscription to all revised paper volumes is $1389.00 domestic, $555.60 additional for foreign mailing.

Mail orders to the Superintendent of Documents, Attn: New Orders, P.O. Box 371954, Pittsburgh, PA 15250–7954. All orders must be accompanied by remittance (check, money order, GPO Deposit Account, VISA, Master Card, or Discover). Charge orders may be telephoned to the GPO Order Desk, Monday through Friday, at **(202) 512–1800** from 8:00 a.m. to 4:00 p.m. eastern time, or FAX your charge orders to **(202) 512-2250**.

Title	Stock Number	Price	Revision Date
1	(869–062–00001–4)	5.00	[4] Jan. 1, 2007
2	(869–062–00002–2)	5.00	Jan. 1, 2007
3 (2006 Compilation and Parts 100 and 102)	(869–062–00003–1)	35.00	[1] Jan. 1, 2007
4	(869–062–00004–9)	10.00	[5] Jan. 1, 2007
5 Parts:			
1–699	(869–062–00005–7)	60.00	Jan. 1, 2007
700–1199	(869–060–00006–2)	50.00	Jan. 1, 2006
1200–End	(869–062–00007–3)	61.00	Jan. 1, 2007
6	(869–060–00008–9)	10.50	Jan. 1, 2006
7 Parts:			
1–26	(869–062–00009–0)	44.00	Jan. 1, 2007
27–52	(869–062–00010–3)	49.00	Jan. 1, 2007
53–209	(869–062–00011–1)	37.00	Jan. 1, 2007
210–299	(869–060–00012–7)	62.00	Jan. 1, 2006
300–399	(869–062–00013–8)	46.00	Jan. 1, 2007
400–699	(869–062–00014–6)	42.00	Jan. 1, 2007
700–899	(869–062–00015–4)	43.00	Jan. 1, 2007
900–999	(869–062–00016–2)	60.00	Jan. 1, 2007
1000–1199	(869–062–00017–1)	22.00	Jan. 1, 2007
1200–1599	(869–060–00018–6)	61.00	Jan. 1, 2006
1600–1899	(869–062–00019–7)	64.00	Jan. 1, 2007
1900–1939	(869–062–00020–1)	31.00	Jan. 1, 2007
1940–1949	(869–062–00021–9)	50.00	[5] Jan. 1, 2007
1950–1999	(869–062–00022–7)	46.00	Jan. 1, 2007
2000–End	(869–062–00023–5)	50.00	Jan. 1, 2007
8	(869–060–00024–1)	63.00	Jan. 1, 2006
9 Parts:			
1–199	(869–062–00025–1)	61.00	Jan. 1, 2007
200–End	(869–062–00026–0)	58.00	Jan. 1, 2007
10 Parts:			
1–50	(869–062–00027–8)	61.00	Jan. 1, 2007
*51–199	(869–062–00028–6)	58.00	Jan. 1, 2007
*200–499	(869–062–00029–4)	46.00	Jan. 1, 2007
500–End	(869–066–00030–8)	62.00	Jan. 1, 2007
11	(869–062–00031–6)	41.00	Jan. 1, 2007
12 Parts:			
1–199	(869–062–00032–4)	34.00	Jan. 1, 2007
200–219	(869–062–00033–2)	37.00	Jan. 1, 2007
220–299	(869–062–00034–1)	61.00	Jan. 1, 2007
300–499	(869–062–00035–9)	47.00	Jan. 1, 2007
500–599	(869–062–00036–7)	39.00	Jan. 1, 2007
600–899	(869–062–00037–5)	56.00	Jan. 1, 2007
900–End	(869–062–00038–3)	50.00	Jan. 1, 2007
***13**	(869–062–00039–1)	55.00	Jan. 1, 2007
14 Parts:			
*1–59	(869–062–00040–5)	63.00	Jan. 1, 2007
60–139	(869–060–00041–1)	61.00	Jan. 1, 2006
140–199	(869–060–00042–9)	30.00	Jan. 1, 2006
200–1199	(869–060–00043–7)	50.00	Jan. 1, 2006
1200–End	(869–062–00044–8)	45.00	Jan. 1, 2007
15 Parts:			
0–299	(869–062–00045–6)	40.00	Jan. 1, 2007
300–799	(869–062–00046–4)	60.00	Jan. 1, 2007
800–End	(869–062–00047–2)	42.00	Jan. 1, 2007
16 Parts:			
*0–999	(869–062–00048–1)	50.00	Jan. 1, 2007
1000–End	(869–062–00049–9)	60.00	Jan. 1, 2007
17 Parts:			
1–199	(869–060–00051–8)	50.00	Apr. 1, 2006
200–239	(869–060–00052–6)	60.00	Apr. 1, 2006
240–End	(869–060–00053–4)	62.00	Apr. 1, 2006
18 Parts:			
1–399	(869–060–00054–2)	62.00	Apr. 1, 2006
400–End	(869–060–00055–1)	26.00	[7] Apr. 1, 2006
19 Parts:			
1–140	(869–060–00056–9)	61.00	Apr. 1, 2006
141–199	(869–060–00057–7)	58.00	Apr. 1, 2006
200–End	(869–060–00058–5)	31.00	Apr. 1, 2006
20 Parts:			
1–399	(869–060–00059–3)	50.00	Apr. 1, 2006
400–499	(869–060–00060–7)	64.00	Apr. 1, 2006
500–End	(869–060–00061–5)	63.00	Apr. 1, 2006
21 Parts:			
1–99	(869–060–00062–3)	40.00	Apr. 1, 2006
100–169	(869–060–00063–1)	49.00	Apr. 1, 2006
170–199	(869–060–00064–0)	50.00	Apr. 1, 2006
200–299	(869–060–00065–8)	17.00	Apr. 1, 2006
300–499	(869–060–00066–6)	30.00	Apr. 1, 2006
500–599	(869–060–00067–4)	47.00	Apr. 1, 2006
600–799	(869–060–00068–2)	15.00	Apr. 1, 2006
800–1299	(869–060–00069–1)	60.00	Apr. 1, 2006
1300–End	(869–060–00070–4)	25.00	Apr. 1, 2006
22 Parts:			
1–299	(869–060–00071–2)	63.00	Apr. 1, 2006
300–End	(869–060–00072–1)	45.00	[8] Apr. 1, 2006
23	(869–060–00073–9)	45.00	Apr. 1, 2006
24 Parts:			
0–199	(869–060–00074–7)	60.00	Apr. 1, 2006
200–499	(869–060–00075–5)	50.00	Apr. 1, 2006
500–699	(869–060–00076–3)	30.00	Apr. 1, 2006
700–1699	(869–060–00077–1)	61.00	Apr. 1, 2006
1700–End	(869–060–00078–0)	30.00	Apr. 1, 2006
25	(869–060–00079–8)	64.00	Apr. 1, 2006
26 Parts:			
§§ 1.0–1–1.60	(869–060–00080–1)	49.00	Apr. 1, 2006
§§ 1.61–1.169	(869–060–00081–0)	63.00	Apr. 1, 2006
§§ 1.170–1.300	(869–060–00082–8)	60.00	Apr. 1, 2006
§§ 1.301–1.400	(869–060–00083–6)	47.00	Apr. 1, 2006
§§ 1.401–1.440	(869–060–00084–4)	56.00	Apr. 1, 2006
§§ 1.441–1.500	(869–060–00085–2)	58.00	Apr. 1, 2006
§§ 1.501–1.640	(869–060–00086–1)	49.00	Apr. 1, 2006
§§ 1.641–1.850	(869–060–00087–9)	61.00	Apr. 1, 2006
§§ 1.851–1.907	(869–060–00088–7)	61.00	Apr. 1, 2006
§§ 1.908–1.1000	(869–060–00089–5)	60.00	Apr. 1, 2006
§§ 1.1001–1.1400	(869–060–00090–9)	61.00	Apr. 1, 2006
§§ 1.1401–1.1550	(869–060–00091–2)	58.00	Apr. 1, 2006
§§ 1.1551–End	(869–060–00092–5)	50.00	Apr. 1, 2006
2–29	(869–060–00093–3)	60.00	Apr. 1, 2006
30–39	(869–060–00094–1)	41.00	Apr. 1, 2006
40–49	(869–060–00095–0)	28.00	Apr. 1, 2006
50–299	(869–060–00096–8)	42.00	Apr. 1, 2006

Title	Stock Number	Price	Revision Date
300–499	(869–060–00097–6)	61.00	Apr. 1, 2006
500–599	(869–060–00098–4)	12.00	[6] Apr. 1, 2006
600–End	(869–060–00099–2)	17.00	Apr. 1, 2006
27 Parts:			
1–399	(869–060–00100–0)	64.00	Apr. 1, 2006
400–End	(869–060–00101–8)	18.00	Apr. 1, 2006
28 Parts:			
0–42	(869–060–00102–6)	61.00	July 1, 2006
43–End	(869–060–00103–4)	60.00	July 1, 2006
29 Parts:			
0–99	(869–060–00104–2)	50.00	July 1, 2006
100–499	(869–060–00105–1)	23.00	July 1, 2006
500–899	(869–060–00106–9)	61.00	July 1, 2006
900–1899	(869–060–00107–7)	36.00	July 1, 2006
1900–1910 (§§ 1900 to 1910.999)	(869–060–00108–5)	61.00	July 1, 2006
1910 (§§ 1910.1000 to end)	(869–060–00109–3)	46.00	July 1, 2006
1911–1925	(869–060–00110–7)	30.00	July 1, 2006
1926	(869–060–00111–5)	50.00	July 1, 2006
1927–End	(869–060–00112–3)	62.00	July 1, 2006
30 Parts:			
1–199	(869–060–00113–1)	57.00	July 1, 2006
200–699	(869–060–00114–0)	50.00	July 1, 2006
700–End	(869–060–00115–8)	58.00	July 1, 2006
31 Parts:			
0–199	(869–060–00116–6)	41.00	July 1, 2006
200–499	(869–060–00117–4)	46.00	July 1, 2006
500–End	(869–060–00118–2)	62.00	July 1, 2006
32 Parts:			
1–39, Vol. I		15.00	[2] July 1, 1984
1–39, Vol. II		19.00	[2] July 1, 1984
1–39, Vol. III		18.00	[2] July 1, 1984
1–190	(869–060–00119–1)	61.00	July 1, 2006
191–399	(869–060–00120–4)	63.00	July 1, 2006
400–629	(869–060–00121–2)	50.00	July 1, 2006
630–699	(869–060–00122–1)	37.00	July 1, 2006
700–799	(869–060–00123–9)	46.00	July 1, 2006
800–End	(869–060–00124–7)	47.00	July 1, 2006
33 Parts:			
1–124	(869–060–00125–5)	57.00	July 1, 2006
125–199	(869–060–00126–3)	61.00	July 1, 2006
200–End	(869–060–00127–1)	57.00	July 1, 2006
34 Parts:			
1–299	(869–060–00128–0)	50.00	July 1, 2006
300–399	(869–060–00129–8)	40.00	July 1, 2006
400–End & 35	(869–060–00130–1)	61.00	[9] July 1, 2006
36 Parts:			
1–199	(869–060–00131–0)	37.00	July 1, 2006
200–299	(869–060–00132–8)	37.00	July 1, 2006
300–End	(869–060–00133–6)	61.00	July 1, 2006
37	(869–060–00134–4)	58.00	July 1, 2006
38 Parts:			
0–17	(869–060–00135–2)	60.00	July 1, 2006
18–End	(869–060–00136–1)	62.00	July 1, 2006
39	(869–060–00137–9)	42.00	July 1, 2006
40 Parts:			
1–49	(869–060–00138–7)	60.00	July 1, 2006
50–51	(869–060–00139–5)	45.00	July 1, 2006
52 (52.01–52.1018)	(869–060–00140–9)	60.00	July 1, 2006
52 (52.1019–End)	(869–060–00141–7)	61.00	July 1, 2006
53–59	(869–060–00142–5)	31.00	July 1, 2006
60 (60.1–End)	(869–060–00143–3)	58.00	July 1, 2006
60 (Apps)	(869–060–00144–7)	57.00	July 1, 2006
61–62	(869–060–00145–0)	45.00	July 1, 2006
63 (63.1–63.599)	(869–060–00146–8)	58.00	July 1, 2006
63 (63.600–63.1199)	(869–060–00147–6)	50.00	July 1, 2006
63 (63.1200–63.1439)	(869–060–00148–4)	50.00	July 1, 2006
63 (63.1440–63.6175)	(869–060–00149–2)	32.00	July 1, 2006
63 (63.6580–63.8830)	(869–060–00150–6)	32.00	July 1, 2006
63 (63.8980–End)	(869–060–00151–4)	35.00	July 1, 2006
64–71	(869–060–00152–2)	29.00	July 1, 2006
72–80	(869–060–00153–1)	62.00	July 1, 2006
81–85	(869–060–00154–9)	60.00	July 1, 2006
86 (86.1–86.599–99)	(869–060–00155–7)	58.00	July 1, 2006
86 (86.600–1–End)	(869–060–00156–5)	50.00	July 1, 2006
87–99	(869–060–00157–3)	60.00	July 1, 2006
100–135	(869–060–00158–1)	45.00	July 1, 2006
136–149	(869–060–00159–0)	61.00	July 1, 2006
150–189	(869–060–00160–3)	50.00	July 1, 2006
190–259	(869–060–00161–1)	39.00	July 1, 2006
260–265	(869–060–00162–0)	50.00	July 1, 2006
266–299	(869–060–00163–8)	50.00	July 1, 2006
300–399	(869–060–00164–6)	42.00	July 1, 2006
400–424	(869–060–00165–4)	56.00	July 1, 2006
425–699	(869–060–00166–2)	61.00	July 1, 2006
700–789	(869–060–00167–1)	61.00	July 1, 2006
790–End	(869–060–00168–9)	61.00	July 1, 2006
41 Chapters:			
1, 1–1 to 1–10		13.00	[3] July 1, 1984
1, 1–11 to Appendix, 2 (2 Reserved)		13.00	[3] July 1, 1984
3–6		14.00	[3] July 1, 1984
7		6.00	[3] July 1, 1984
8		4.50	[3] July 1, 1984
9		13.00	[3] July 1, 1984
10–17		9.50	[3] July 1, 1984
18, Vol. I, Parts 1–5		13.00	[3] July 1, 1984
18, Vol. II, Parts 6–19		13.00	[3] July 1, 1984
18, Vol. III, Parts 20–52		13.00	[3] July 1, 1984
19–100		13.00	[3] July 1, 1984
1–100	(869–060–00169–7)	24.00	July 1, 2006
101	(869–060–00170–1)	21.00	[9] July 1, 2006
102–200	(869–060–00171–9)	56.00	July 1, 2006
201–End	(869–060–00172–7)	24.00	July 1, 2006
42 Parts:			
1–399	(869–060–00173–5)	61.00	Oct. 1, 2006
400–413	(869–060–00174–3)	32.00	Oct. 1, 2006
414–429	(869–060–00175–1)	32.00	Oct. 1, 2006
430–End	(869–060–00176–0)	64.00	Oct. 1, 2006
43 Parts:			
1–999	(869–060–00177–8)	56.00	Oct. 1, 2006
1000–end	(869–060–00178–6)	62.00	Oct. 1, 2006
44	(869–060–00179–4)	50.00	Oct. 1, 2006
45 Parts:			
1–199	(869–060–00180–8)	60.00	Oct. 1, 2006
200–499	(869–060–00181–6)	34.00	Oct. 1, 2006
500–1199	(869–060–00182–4)	56.00	Oct. 1, 2006
1200–End	(869–060–00183–2)	61.00	Oct. 1, 2006
46 Parts:			
1–40	(869–060–00184–1)	46.00	Oct. 1, 2006
41–69	(869–060–00185–9)	39.00	Oct. 1, 2006
70–89	(869–060–00186–7)	14.00	Oct. 1, 2006
90–139	(869–060–00187–5)	44.00	Oct. 1, 2006
140–155	(869–060–00188–3)	25.00	Oct. 1, 2006
156–165	(869–060–00189–1)	34.00	Oct. 1, 2006
166–199	(869–060–00190–5)	46.00	Oct. 1, 2006
200–499	(869–060–00191–3)	40.00	Oct. 1, 2006
500–End	(869–060–00192–1)	25.00	Oct. 1, 2006
47 Parts:			
0–19	(869–060–00193–0)	61.00	Oct. 1, 2006
20–39	(869–060–00194–8)	46.00	Oct. 1, 2006
40–69	(869–060–00195–6)	40.00	Oct. 1, 2006
70–79	(869–060–00196–4)	61.00	Oct. 1, 2006
80–End	(869–060–00197–2)	61.00	Oct. 1, 2006
48 Chapters:			
1 (Parts 1–51)	(869–060–00198–1)	63.00	Oct. 1, 2006
1 (Parts 52–99)	(869–060–00199–9)	49.00	Oct. 1, 2006
2 (Parts 201–299)	(869–060–00200–6)	50.00	Oct. 1, 2006
3–6	(869–060–00201–4)	34.00	Oct. 1, 2006
7–14	(869–060–00202–2)	56.00	Oct. 1, 2006

Title	Stock Number	Price	Revision Date
15–28	(869–060–00203–1)	47.00	Oct. 1, 2006
29–End	(869–060–00204–9)	47.00	Oct. 1, 2006
49 Parts:			
1–99	(869–060–00205–7)	60.00	Oct. 1, 2006
100–185	(869–060–00206–5)	63.00	Oct. 1, 2006
186–199	(869–060–00207–3)	23.00	Oct. 1, 2006
200–299	(869–060–00208–1)	32.00	Oct. 1, 2006
300–399	(869–060–00209–0)	32.00	Oct. 1, 2006
400–599	(869–060–00210–3)	64.00	Oct. 1, 2006
600–999	(869–060–00211–1)	19.00	Oct. 1, 2006
1000–1199	(869–060–00212–0)	28.00	Oct. 1, 2006
1200–End	(869–060–00213–8)	34.00	Oct. 1, 2006
50 Parts:			
1–16	(869–060–00214–6)	11.00	[10] Oct. 1, 2006
17.1–17.95(b)	(869–060–00215–4)	32.00	Oct. 1, 2006
17.95(c)–end	(869–060–00216–2)	32.00	Oct. 1, 2006
17.96–17.99(h)	(869–060–00217–1)	61.00	Oct. 1, 2006
17.99(i)–end and 17.100–end	(869–060–00218–9)	47.00	[10] Oct. 1, 2006
18–199	(869–060–00219–7)	50.00	Oct. 1, 2006
200–599	(869–060–00220–1)	45.00	Oct. 1, 2006
600–659	(869–060–00221–9)	31.00	Oct. 1, 2006
660–End	(869–060–00222–7)	31.00	Oct. 1, 2006
CFR Index and Findings Aids	(869–060–00050–0)	62.00	Jan. 1, 2006
Complete 2007 CFR set		1,389.00	2007
Microfiche CFR Edition:			
Subscription (mailed as issued)		332.00	2007
Individual copies		4.00	2007
Complete set (one-time mailing)		332.00	2006
Complete set (one-time mailing)		325.00	2005

[1] Because Title 3 is an annual compilation, this volume and all previous volumes should be retained as a permanent reference source.

[2] The July 1, 1985 edition of 32 CFR Parts 1–189 contains a note only for Parts 1–39 inclusive. For the full text of the Defense Acquisition Regulations in Parts 1–39, consult the three CFR volumes issued as of July 1, 1984, containing those parts.

[3] The July 1, 1985 edition of 41 CFR Chapters 1–100 contains a note only for Chapters 1 to 49 inclusive. For the full text of procurement regulations in Chapters 1 to 49, consult the eleven CFR volumes issued as of July 1, 1984 containing those chapters.

[4] No amendments to this volume were promulgated during the period January 1, 2005, through January 1, 2006. The CFR volume issued as of January 1, 2005 should be retained.

[5] No amendments to this volume were promulgated during the period January 1, 2006, through January 1, 2007. The CFR volume issued as of January 6, 2006 should be retained.

[6] No amendments to this volume were promulgated during the period April 1, 2000, through April 1, 2006. The CFR volume issued as of April 1, 2000 should be retained.

[7] No amendments to this volume were promulgated during the period April 1, 2005, through April 1, 2006. The CFR volume issued as of April 1, 2004 should be retained.

[8] No amendments to this volume were promulgated during the period April 1, 2005, through April 1, 2006. The CFR volume issued as of April 1, 2005 should be retained.

[9] No amendments to this volume were promulgated during the period July 1, 2005, through July 1, 2006. The CFR volume issued as of July 1, 2005 should be retained.

[10] No amendments to this volume were promulgated during the period October 1, 2005, through October 1, 2006. The CFR volume issued as of October 1, 2005 should be retained.