AUTHENTICATED
U.S. GOVERNMENT
INFORMATION
GPO

Federal Register

6–20–07 Wednesday
Vol. 72 No. 118 June 20, 2007

Pages 33851–34160

The **FEDERAL REGISTER** (ISSN 0097–6326) is published daily, Monday through Friday, except official holidays, by the Office of the Federal Register, National Archives and Records Administration, Washington, DC 20408, under the Federal Register Act (44 U.S.C. Ch. 15) and the regulations of the Administrative Committee of the Federal Register (1 CFR Ch. I). The Superintendent of Documents, U.S. Government Printing Office, Washington, DC 20402 is the exclusive distributor of the official edition. Periodicals postage is paid at Washington, DC.

The **FEDERAL REGISTER** provides a uniform system for making available to the public regulations and legal notices issued by Federal agencies. These include Presidential proclamations and Executive Orders, Federal agency documents having general applicability and legal effect, documents required to be published by act of Congress, and other Federal agency documents of public interest.

Documents are on file for public inspection in the Office of the Federal Register the day before they are published, unless the issuing agency requests earlier filing. For a list of documents currently on file for public inspection, see *www.archives.gov.*

The seal of the National Archives and Records Administration authenticates the Federal Register as the official serial publication established under the Federal Register Act. Under 44 U.S.C. 1507, the contents of the **Federal Register** shall be judicially noticed.

The **Federal Register** is published in paper and on 24x microfiche. It is also available online at no charge as one of the databases on GPO Access, a service of the U.S. Government Printing Office.

The online edition of the **Federal Register** *www.gpoaccess.gov/nara,* available through GPO Access, is issued under the authority of the Administrative Committee of the Federal Register as the official legal equivalent of the paper and microfiche editions (44 U.S.C. 4101 and 1 CFR 5.10). It is updated by 6 a.m. each day the **Federal Register** is published and includes both text and graphics from Volume 59, Number 1 (January 2, 1994) forward.

For more information about GPO Access, contact the GPO Access User Support Team, call toll free 1-888-293-6498; DC area 202-512-1530; fax at 202-512-1262; or via e-mail at *gpoaccess@gpo.gov.* The Support Team is available between 7:00 a.m. and 9:00 p.m. Eastern Time, Monday–Friday, except official holidays.

The annual subscription price for the **Federal Register** paper edition is $749 plus postage, or $808, plus postage, for a combined **Federal Register, Federal Register** Index and List of CFR Sections Affected (LSA) subscription; the microfiche edition of the **Federal Register** including the **Federal Register** Index and LSA is $165, plus postage. Six month subscriptions are available for one-half the annual rate. The prevailing postal rates will be applied to orders according to the delivery method requested. The price of a single copy of the daily **Federal Register,** including postage, is based on the number of pages: $11 for an issue containing less than 200 pages; $22 for an issue containing 200 to 400 pages; and $33 for an issue containing more than 400 pages. Single issues of the microfiche edition may be purchased for $3 per copy, including postage. Remit check or money order, made payable to the Superintendent of Documents, or charge to your GPO Deposit Account, VISA, MasterCard, American Express, or Discover. Mail to: New Orders, Superintendent of Documents, P.O. Box 371954, Pittsburgh, PA 15250-7954; or call toll free 1-866-512-1800, DC area 202-512-1800; or go to the U.S. Government Online Bookstore site, see *bookstore.gpo.gov.*

There are no restrictions on the republication of material appearing in the **Federal Register.**

How To Cite This Publication: Use the volume number and the page number. Example: 72 FR 12345.

Postmaster: Send address changes to the Superintendent of Documents, Federal Register, U.S. Government Printing Office, Washington DC 20402, along with the entire mailing label from the last issue received.

SUBSCRIPTIONS AND COPIES

PUBLIC

Subscriptions:

Paper or fiche	**202–512–1800**
Assistance with public subscriptions	**202–512–1806**

General online information **202–512–1530; 1–888–293–6498**

Single copies/back copies:

Paper or fiche	**202–512–1800**
Assistance with public single copies	**1–866–512–1800 (Toll-Free)**

FEDERAL AGENCIES

Subscriptions:

Paper or fiche	**202–741–6005**
Assistance with Federal agency subscriptions	**202–741–6005**

FEDERAL REGISTER WORKSHOP

THE FEDERAL REGISTER: WHAT IT IS AND HOW TO USE IT

FOR: Any person who uses the Federal Register and Code of Federal Regulations.

WHO: Sponsored by the Office of the Federal Register.

WHAT: Free public briefings (approximately 3 hours) to present:

1. The regulatory process, with a focus on the Federal Register system and the public's role in the development of regulations.

2. The relationship between the Federal Register and Code of Federal Regulations.

3. The important elements of typical Federal Register documents.

4. An introduction to the finding aids of the FR/CFR system.

WHY: To provide the public with access to information necessary to research Federal agency regulations which directly affect them. There will be no discussion of specific agency regulations.

WHEN: Tuesday, July 17, 2007
9:00 a.m.–Noon

WHERE: Office of the Federal Register
Conference Room, Suite 700
800 North Capitol Street, NW.
Washington, DC 20002

RESERVATIONS: (202) 741–6008

Printed on recycled paper.

Contents

Federal Register

Vol. 72, No. 118

Wednesday, June 20, 2007

Agricultural Marketing Service
RULES
Fish and shellfish; mandatory country of origin labeling, 33851
Raisins produced from grapes grown in California
Correction, 33851–33852
PROPOSED RULES
Beef, lamb, pork, perishable agricultural commodities, and peanuts; mandatory country of origin labeling, 33917–33918
Cherries (sweet) grown in Washington, 33922–33924
Nectarines and peaches grown in California, 33919–33922
Oranges, grapefruit, tangerines, and tangelos grown in Florida, 33918–33919
NOTICES
Grade standards:
Parsley, 33967–33968

Agriculture Department
See Agricultural Marketing Service
See Federal Crop Insurance Corporation
See Forest Service
See Rural Housing Service
NOTICES
Agency information collection activities; proposals, submissions, and approvals, 33967

Architectural and Transportation Barriers Compliance Board

PROPOSED RULES
Americans with Disabilities Act; implementation:
Accessibility guidelines—
Outdoor developed areas, 34074–34155

Army Department
NOTICES
Environmental statements; availability, etc.:
Fort Carson, CO; base closure and realignment actions, 33982–33983
Pinon Canyon Maneuver Site, CO; base closure and realignment actions, 33983–33984

Centers for Disease Control and Prevention
NOTICES
Agency information collection activities; proposals, submissions, and approvals, 34016–34018

Coast Guard
RULES
Drawbridge operations:
New Jersey and Pennsylvania, 33881–33882
Ports and waterways safety; regulated navigation areas, safety zones, security zones, etc.:
Atlantic Ocean off Riverside Boulevard, Long Beach, NY, 33892–33894
Chicago Harbor, IL, 33896–33898
Chicago River, IL, 33882–33884
Connecticut River, Hartford, CT, 33894–33896
Mystic Seaport and Mystic River, CT, 33890–33892
Puget Sound Captain of the Port Zone, WA, 33899–33901
Salisbury Beach, Salisbury, MA, 33886–33888
San Joaquin River, Antioch, San Francisco Bay, CA, 33888–33890
Weymouth Fore River , Weymouth, MA, 33884–33886

Commerce Department
See Foreign-Trade Zones Board
See National Oceanic and Atmospheric Administration
See Patent and Trademark Office

Defense Department
See Army Department

Drug Enforcement Administration
NOTICES
Applications, hearings, determinations, etc.:
Cambrex Charles City, Inc., 34039–34040
Chattem Chemicals, Inc., 34040
Noramco Inc., 34040–34041
Orasure Technologies, Inc., 34041
Tocris Cookson, Inc., 34041

Education Department
NOTICES
Agency information collection activities; proposals, submissions, and approvals, 33984–33986
Grants and cooperative agreements; availability, etc.:
Charter Schools Program, 33986–33991

Employee Benefits Security Administration
NOTICES
Meetings:
Employee Welfare and Pension Benefit Plans Advisory Council, 34042–34043
Individual Retirement Accounts and similar plans; computer model investment advice program; feasibility; hearing, 34043–34044

Employment and Training Administration
NOTICES
Adjustment assistance; applications, determinations, etc.:
Creative Engineering Products, 34044–34045
FCI USA Inc. et al., 34046–34047
Featherlite, Inc., 34047
Golden Ratio Woodworks, 34047
Pine River Plastics, Inc., 34047
Primary Staffing Services, Inc., 34047–34048
Robison and Anton Textile Co., 34048
Romar Textile Co., Inc., 34048–34049
Texas Instruments Kilby Fab, 34049

Employment Standards Administration
NOTICES
Agency information collection activities; proposals, submissions, and approvals, 34049–34051

Energy Department
See Federal Energy Regulatory Commission
NOTICES
Electricity export and import authorizations, permits, etc.:
Coral Power, L.L.C., 33991–33992
PPL EnergyPlus, LLC, 33992

Meetings:
Environmental Management Site-Specific Advisory Board—
Nevada Test Site, 33992–33993

Environmental Protection Agency
RULES
Pesticides; tolerances in food, animal feeds, and raw agricultural commodities:
Imidacloprid, 33907–33913
Lactofen, 33901–33907
PROPOSED RULES
Air quality implementation plans; approval and promulgation; various States; air quality planning purposes; designation of areas:
Ohio, 33937–33948
Air quality implementation plans; approval and promulgation; various States:
New Mexico, 33933–33937
NOTICES
Meetings:
National ambient air quality standards; workshop, 34003–34004
Nitrogen and sulfur oxides secondary national ambient air quality standards workshop, 34004–34005
Secondary particulate matter national ambient air quality standards review; policy-relevant science; workshop, 34005–34006
Pesticide programs:
Pesticide applicator certifications; State plans—
Colorado, 34006
Risk assessments—
Chloropicrin, etc., 34006–34007
Mefluidide, 34007–34009
Pesticides; experimental use permits, etc.:
Bayer Crop Science LP et al., 34009–34010
Valent Biosciences Corp., 34010–34011

Executive Office of the President
See Presidential Documents
See Science and Technology Policy Office

Federal Aviation Administration
RULES
Airworthiness directives:
Airbus, 33872–33881
BAE Systems (Operations), Ltd., 33854–33856
Boeing, 33856–33867
Empresa Brasileira de Aeronautica S.A. (EMBRAER), 33876–33877
Gulfstream, 33867–33871
McDonnell Douglas, 33852–33854, 33871–33872
Radio services, special:
Private land mobile services—
800 MHz band; improving public safety communications, 33914–33916
PROPOSED RULES
Airworthiness directives:
Airbus, 33929–33932
Boeing, 33926–33928
Empresa Brasileira de Aeronautica S.A. (EMBRAER), 33926
Airworthiness standards:
Propellers, 33925–33926

Federal Communications Commission
RULES
Practice and procedure:
Broadcast Decency Enforcement Act of 2005; implementation—
Obscene, indecent, and profane broadcasts; maximum forfeiture penalties, 33913–33914
PROPOSED RULES
Common carrier services:
Wireless E911 location accuracy and E911 IP-enabled service providers requirements, 33948–33955
Radio frequency devices:
Radio receivers; interference immunity performance specifications; proceeding termination, 33955
NOTICES
Agency information collection activities; proposals, submissions, and approvals, 34012

Federal Crop Insurance Corporation
NOTICES
Grants and cooperative agreements; availability, etc.:
Crop Insurance Education in Targeted States Program, 33968

Federal Emergency Management Agency
NOTICES
Agency information collection activities; proposals, submissions, and approvals, 34028–34031
Disaster and emergency areas:
Iowa, 34031
Kansas, 34031
Missouri, 34032

Federal Energy Regulatory Commission
NOTICES
Complaints filed:
NSTAR Electric & Gas Corp., 33997–33998
Electric rate and corporate regulation combined filings, 33998–34000
Hydroelectric applications, 34000–34001
Meetings: Sunshine Act, 34001–34003
Applications, hearings, determinations, etc.:
Alliance Pipeline L.P., 33993
Colorado Interstate Gas Co., 33993–33994
Florida Gas Transmission Co. LLC, 33994
ITC Holdings Corp. et al., 33994
Kinder Morgan Interstate Gas Transmission LLC, 33994–33995
Northern Border Pipeline Co., 33995
Northern Natural Gas Co., 33995–33996
Northwest Pipeline Corp., 33996–33997
WTG Hugoton, LP, 33997

Federal Maritime Commission
NOTICES
Agreements filed, etc., 34012–34013
Ocean transportation intermediary licenses:
Ampac Transline, Inc., et al., 34013
CBE USA International Inc. et al., 34013–34014

Federal Motor Carrier Safety Administration
NOTICES
Meetings:
Commercial Driver's License Advisory Committee, 34060–34061
Medical Review Board, 34061–34062
Motor carrier safety standards:
Driver qualifications; vision requirement exemptions, 34062–34063

Federal Reserve System
NOTICES
Committees; establishment, renewal, termination, etc.:
Consumer Advisory Council, 34014–34015
Meetings; Sunshine Act, 34015

Fish and Wildlife Service
NOTICES
Agency information collection activities; proposals, submissions, and approvals, 34034–34035

Foreign-Trade Zones Board
NOTICES
Applications, hearings, determinations, etc.:
Texas
Electrolux Home Care Products Ltd.; vacuum cleaner products manufacturing facility, 33976–33977

Forest Service
NOTICES
Meetings:
Resource Advisory Committees—
Lake County, 33968–33969
Shasta County, 33969
Tehama County, 33968
Trinity County, 33969

Health and Human Services Department
See Centers for Disease Control and Prevention
See Health Resources and Services Administration
See Indian Health Service
See National Institutes of Health
NOTICES
Committees; establishment, renewal, termination, etc.:
National Biodefense Science Board, 34015
Scientific misconduct findings; administrative actions:
Murillo, Carlos A., M.D., 34016

Health Resources and Services Administration
NOTICES
Privacy Act; systems of records, 34018

Homeland Security Department
See Coast Guard
See Federal Emergency Management Agency
See Transportation Security Administration
NOTICES
Committees; establishment, renewal, termination, etc.:
Critical Infrastructure Partnership Advisory Council, 34027–34028

Housing and Urban Development Department
NOTICES
Agency information collection activities; proposals, submissions, and approvals, 34033–34034

Indian Affairs Bureau
NOTICES
Environmental statements; availability, etc.:
Desert Rock Energy and Navajo Mine Extension Projects, San Juan County, NM, 34035–34036

Indian Health Service
NOTICES
Inpatient and outpatient medical care; reimbursement rates (2007 CY), 34018

Interior Department
See Fish and Wildlife Service
See Indian Affairs Bureau

International Trade Commission
NOTICES
Import investigations:
Apparel goods from—
Costa Rica; probable economic effect of modifications to rules of origin and tariffs, 34036–34037
Engines components and products containing same, 34037–34038
Telecommunications or data communications networks equipment including routers, switches, hubs, and components, 34038

Justice Department
See Drug Enforcement Administration

Labor Department
See Employee Benefits Security Administration
See Employment and Training Administration
See Employment Standards Administration
NOTICES
Agency information collection activities; proposals, submissions, and approvals, 34041–34042

National Institutes of Health
NOTICES
Inventions, Government-owned; availability for licensing, 34018–34025
Meetings:
National Institute of Allergy and Infectious Diseases, 34025–34026
National Institute on Drug Abuse, 34025
Scientific Review Center, 34026–34027
Patent licenses; non-exclusive, exclusive, or partially exclusive:
Cambridge Antibody Technology, Ltd., 34027

National Oceanic and Atmospheric Administration
PROPOSED RULES
Fishery conservation and management:
Atlantic coastal fisheries—
American lobster, 33955–33966
NOTICES
Committees; establishment, renewal, termination, etc.:
Stellwagen Bank National Marine Sanctuary Advisory Council, 33977
Endangered and threatened species:
Andromous fish take—
Puget Sound, WA; chinook salmon;, 33977–33978
Grants and cooperative agreements; availability, etc.:
National Marine Sanctuary Program, 33978–33981
Marine mammal permit applications, determinations, etc., 33981

Overseas Private Investment Corporation
NOTICES
Meetings; Sunshine Act, 34051

Patent and Trademark Office
NOTICES
Committees; establishment, renewal, termination, etc.:
Patent and Trademark Public Advisory Committees, 33981–33982

Pipeline and Hazardous Materials Safety Administration
NOTICES
Hazardous materials:
Special permit applications; list, 34064–34065

Special permit applications delayed; list, 34065
Special permit modification applications; list, 34065–34066

Presidential Documents
ADMINISTRATIVE ORDERS
Russian Federation; blocking Government property relating to the disposition of highly enriched uranium from nuclear weapons (Notice of June 19, 2007), 34157–34160

Railroad Retirement Board
NOTICES
Agency information collection activities; proposals, submissions, and approvals, 34052

Rural Housing Service
NOTICES
Grants and cooperative agreements; availability, etc.:
Technical and Supervisory Assistance Program, 33969–33976

Science and Technology Policy Office
NOTICES
Meetings:
National Science and Technology Council, 34011

Securities and Exchange Commission
RULES
Securities:
Foreign private issuer's registration; termination
Correction, 33881
NOTICES
Public Company Accounting Oversight Board:
Auditing Standard No. 5; internal control over financial reporting integrated with financial statements audit; proposed filing, 34052–34053
Self-regulatory organizations; proposed rule changes:
Boston Stock Exchange, Inc., 34053–34054
New York Stock Exchange LLC, 34054–34059

Small Business Administration
NOTICES
Meetings:
National Small Business Development Center Advisory Board, 34059

State Department
PROPOSED RULES
Freedom of Information Act; implementation:
Search fees, 33932–33933
NOTICES
Arms Export Control Act:
Persons convicted of violating or conspiring to violate Section 38; statutory debarment, 34059–34060

Surface Transportation Board
NOTICES
Railroad operation, acquisition, construction, etc.:
Union Pacific Railroad Co., 34066–34067

Transportation Department
See Federal Aviation Administration
See Federal Motor Carrier Safety Administration
See Pipeline and Hazardous Materials Safety Administration
See Surface Transportation Board

Transportation Security Administration
NOTICES
Agency information collection activities; proposals, submissions, and approvals, 34032–34033

Treasury Department
NOTICES
Agency information collection activities; proposals, submissions, and approvals, 34067

Veterans Affairs Department
NOTICES
Agency information collection activities; proposals, submissions, and approvals, 34067–34072

Separate Parts In This Issue

Part II
Architectural and Transportation Barriers Compliance Board, 34074–34155

Part III
Executive Office of the President, Presidential Documents, 34157–34160

Reader Aids
Consult the Reader Aids section at the end of this issue for phone numbers, online resources, finding aids, reminders, and notice of recently enacted public laws.

To subscribe to the Federal Register Table of Contents LISTSERV electronic mailing list, go to http://listserv.access.gpo.gov and select Online mailing list archives, FEDREGTOC-L, Join or leave the list (or change settings); then follow the instructions.

CFR PARTS AFFECTED IN THIS ISSUE

A cumulative list of the parts affected this month can be found in the Reader Aids section at the end of this issue.

3 CFR

Executive Orders

13159 (See Notice of June 19, 2007) 34159

Administrative Orders

Notices:

Notice of June 19, 2007 34159

7 CFR

60 33851

989 33851

Proposed Rules:

60 33917

905 33918

916 33919

917 33919

923 (2 documents) 33918, 33922

14 CFR

39 (8 documents) 33852, 33854, 33856, 33859, 33867, 33871, 33872, 33876, 33877

Proposed Rules:

23 33925

25 33925

33 33925

35 33925

39 (3 documents) 33926, 33929

17 CFR

200 33881

22 CFR

Proposed Rules:

171 33932

33 CFR

117 33881

165 (9 documents) 33882, 33884, 33886, 33888, 33890, 33892, 33894, 33896, 33899

36 CFR

Proposed Rules:

1195 34074

40 CFR

180 (2 documents) 33901, 33907

Proposed Rules:

52 (2 documents) 33933, 33937

81 33937

47 CFR

1 33913

90 33914

Proposed Rules:

9 33948

15 33955

20 33948

50 CFR

Proposed Rules:

697 33955

Rules and Regulations

Federal Register
Vol. 72, No. 118
Wednesday, June 20, 2007

This section of the FEDERAL REGISTER contains regulatory documents having general applicability and legal effect, most of which are keyed to and codified in the Code of Federal Regulations, which is published under 50 titles pursuant to 44 U.S.C. 1510.

The Code of Federal Regulations is sold by the Superintendent of Documents. Prices of new books are listed in the first FEDERAL REGISTER issue of each week.

DEPARTMENT OF AGRICULTURE

Agricultural Marketing Service

7 CFR Part 60

[Docket No. AMS–LS–06–0166; LS–03–04]

RIN 0581–AC26

Mandatory Country of Origin Labeling of Fish and Shellfish

AGENCY: Agricultural Marketing Service, USDA.

ACTION: Interim final rule; reopening of comment period.

SUMMARY: The Agricultural Marketing Service (AMS) is reopening the comment period for 60 days for the interim final rule for mandatory country of origin labeling (COOL) for fish and shellfish covered commodities that was published in the **Federal Register** on October 5, 2004 (69 FR 59708). The interim final rule requires certain retailers and their suppliers to notify their customers of the country of origin and the method of production (wild and/or farm-raised) of specified fish and shellfish products. The interim final rule also specifies recordkeeping responsibilities for affected retailers and their suppliers. AMS requests general comments on the interim final rule. All affected persons are hereby given notice of the opportunity to submit written data and views concerning the interim final rule. AMS will review the submitted comments and information as it promulgates a final rule for mandatory COOL for fish and shellfish.

DATES: Comments must be submitted on or before August 20, 2007, to be assured of consideration.

ADDRESSES: Comments should be submitted through the internet at *http://www.regulations.gov.* Send written comments to: Country of Origin Labeling Program, Room 2607–S; Agricultural Marketing Service (AMS), USDA; 1400 Independence Avenue, SW., Washington, DC 20250–0254, or by facsimile to (202) 720–1112. Comments received will be posted on the Web site *http://www.regulations.gov.* Comments sent to the above location that specifically pertain to the information collection and recordkeeping requirements should also be sent to the Desk Officer for Agriculture, Office of Information and Regulatory Affairs, Office of Management and Budget (OMB), New Executive Office Building, 725 17th Street, NW., Room 725, Washington, DC 20503.

FOR FURTHER INFORMATION CONTACT: Martin O'Connor; Chief, Standards, Analysis, and Technology Branch; Livestock and Seed Program, AMS, USDA, by telephone on (202) 720–4486, or via e-mail to: *COOL@usda.gov.* Information can also be found at *http://www.ams.usda.gov/cool/.*

SUPPLEMENTARY INFORMATION: The Farm Security and Rural Investment Act of 2002 (Farm Bill) (7 U.S.C. 7901) and the 2002 Supplemental Appropriations Act (Appropriations Act) (Pub. L. 107–206) amended the Agricultural Marketing Act of 1946 (7 U.S.C. 1621 et seq.) by adding 7 U.S.C. 1638–1638d to direct the Secretary of Agriculture to promulgate regulations by September 30, 2004, requiring retailers to notify their customers of the country of origin of covered commodities. On October 30, 2003, AMS published a proposed rule for mandatory COOL for all covered commodities—beef, lamb, pork, fish, perishable agricultural commodities, and peanuts (68 FR 61944). Subsequently, the FY 2004 Consolidated Appropriations Act (Pub. L. 108–199) delayed the applicability of mandatory COOL for all covered commodities except wild and farm-raised fish and shellfish until September 30, 2006. The Agriculture, Rural Development, Food and Drug Administration, and Related Agencies Appropriations Act of 2006 (Pub. L. 109–97) further delayed the applicability of mandatory COOL for all covered commodities except wild and farm-raised fish and shellfish until September 30, 2008. On October 5, 2004, AMS published an interim final rule (69 FR 59708) for the mandatory COOL program for fish and shellfish. The interim final rule can be found at: *http://www.ams.usda.gov/cool/index.htm.* The interim final rule became effective on April 4, 2005.

AMS reopened the interim final rule's comment period for 90 days on November 27, 2006 (71 FR 68431). The reopened comment period was limited to comments concerning the economic impacts of the interim final rule, including implementation costs, maintenance costs, the burden of the information collection and recordkeeping requirements, benefits and net economic impacts. Comments and information received as a result of the reopened interim final rule's comment period, to the extent relevant, would be reviewed in connection with any final regulatory action for fish and shellfish and any of the other covered commodities.

In preparation for promulating a final rule for mandatory COOL for fish and shellfish, AMS now seeks comments on general aspects of the interim final rule's provisions. Given that the interim final rule has been in effect for more than 2 years, affected retailers and their suppliers now have considerable experience in complying with the requirements, and have perspective relating to the information that is provided under the program and the program's costs and benefits. AMS invites interested parties to submit comments, data, or other relevant information on the mandatory COOL program set forth in teh interim final rule.

Authority: 7 U.S.C. 1621 *et seq.*

Dated: June 14, 2007.

Lloyd C. Day,

Administrator, Agricultural Marketing Service.

[FR Doc. 07–3028 Filed 6–15–07; 8:53 am]

BILLING CODE 3410–02–M

DEPARTMENT OF AGRICULTURE

Agricultural Marketing Service

7 CFR Part 989

[Docket No. AMS–FV–07–0076; FV04–989–3 C]

Raisins Produced From Grapes Grown in California; Change to Reporting Requirements Regarding Other Seedless Raisins; Correction

AGENCY: Agricultural Marketing Service, USDA.

ACTION: Correcting amendment.

SUMMARY: The Agricultural Marketing Service published a final rule in the **Federal Register** on September 28, 2004 (69 FR 57822). The document changed reporting requirements regarding Other Seedless varietal type raisins under the California raisin marketing order. However, three paragraphs in one subpart of the marketing order's rules and regulations were inadvertently omitted from subsequent issues of the Code of Federal Regulations (CFR). This document identifies the three paragraphs in the subpart that need to be reinserted into Title 7 of the CFR, Part 989.

DATES: *Effective Date:* Effective on June 20, 2007.

FOR FURTHER INFORMATION CONTACT: Rose Aguayo, Marketing Specialist, or Kurt J. Kimmel, Regional Manager, Marketing Order Administration Branch, Fruit and Vegetable Programs, AMS, USDA; Telephone: (559) 487–5901, Fax: (559) 487–5906; or E-mail: *Rose.Aguayo@usda.gov* or *Kurt.Kimmel@usda.gov.*

SUPPLEMENTARY INFORMATION: This document provides correcting amendments to Marketing Order 989 found at 7 CFR part 989 so that handlers of organically-produced Other Seedless varietal type raisins continue to report inventory, acquisitions, and disposition of such raisins to the Raisin Administrative Committee.

List of Subjects in 7 CFR Part 989

Marketing agreements, Raisins, Reporting and recordkeeping requirements.

■ Accordingly, 7 CFR part 989 is corrected by making the following correcting amendments:

PART 989—RAISINS PRODUCED FROM GRAPES GROWN IN CALIFORNIA

■ 1. The authority citation for 7 CFR part 989 continues to read as follows:

Authority: 7 U.S.C. 601–674.

■ 2. Amend paragraph (g) of § 989.173 by adding paragraphs (g)(1) through (g)(3) to read as follows:

§ 989.173 Reports.

* * * * *

(g) * * *

(1) *Inventory report of organically-produced raisins.* Each handler shall submit to the Committee by the close of business on July 31 of each crop year, and not later than the following August 6, on an appropriate form provided by the Committee, a report showing, with respect to the organically-produced raisins held by such handler:

(i) The quantity of free tonnage raisins, segregated as to locations where they are stored and whether they are natural condition or packed;

(ii) The quantity of reserve tonnage raisins held for the account of the Committee;

(iii) The quantity of off-grade raisins segregated as to those for reconditioning and those for disposition as such.

(2) *Acquisition report of organically-produced standard raisins.* Each handler shall submit to the Committee for each week (Sunday through Saturday or such other 7-day period for which the handler has submitted a proposal to and received approval from the Committee) and not later than the following Wednesday, on an appropriate form provided by the Committee, a report showing the following:

(i) The total net weight of the standard raisins acquired during the reporting period, segregated when appropriate, as to free tonnage and reserve tonnage;

(ii) The location of the reserve tonnage; and

(iii) The cumulative totals of such acquisitions (as so segregated) from the beginning of the current crop year.

(iv) Upon request of the Committee, each handler shall provide copies of the organic certificate(s) applicable to the quantity of raisins reported as acquired.

(3) *Disposition report of organically-produced raisins.* No later than the seventh day of each month, handlers who are not processors shall submit to the Committee, on an appropriate form provided by the Committee, a report showing the aggregate quantity of free tonnage packed raisins and standard natural condition raisins which were shipped or otherwise disposed of by such handler during the preceding month (exclusive of transfer within the State of California between the plants of any such handler and from such handler to other handlers). Such information shall include:

(i) Domestic outlets (exclusive of Federal government purchases) according to the quantity shipped in consumer cartons, the quantity of bags having a net weight content of 4 pounds or less, and the quantity shipped in bulk packs (including, but not limited to those in bags having a net weight content of more than 4 pounds);

(ii) Federal government purchases;

(iii) Export outlets according to quantity shipped in consumer cartons, the quantity shipped in bags having a net weight of 4 pounds or less, and the quantity shipped in bulk packs (including, but not limited to those in bags having a net weight content of more than 4 pounds);

(iv) Export outlets, by countries of destination; and

(v) Each of any other outlets in which the handler disposed of such raisins other than by any transfer which is excluded by the preceding sentence.

* * * * *

Dated: June 13, 2007.

Lloyd C. Day,

Administrator, Agricultural Marketing Service.

[FR Doc. E7–11829 Filed 6–19–07; 8:45 am]

BILLING CODE 3410–02–P

DEPARTMENT OF TRANSPORTATION

Federal Aviation Administration

14 CFR Part 39

[Docket No. FAA–2007–27152; Directorate Identifier 2006–NM–219–AD; Amendment 39–15105; AD 2007–13–01]

RIN 2120–AA64

Airworthiness Directives; McDonnell Douglas Model 717–200 Airplanes

AGENCY: Federal Aviation Administration (FAA), Department of Transportation (DOT).

ACTION: Final rule.

SUMMARY: The FAA is adopting a new airworthiness directive (AD) for certain McDonnell Douglas Model 717–200 airplanes. This AD requires installing a certain junction(s) and changing the wiring of the first officer's pitot static heater system. This AD results from a report of temporary loss of the auto-flight function with displays of suspect or erratic airspeed indications. We are issuing this AD to prevent display of suspect or erratic airspeed indications during heavy rain conditions, which could reduce the ability of the flightcrew to maintain the safe flight and landing of the airplane.

DATES: This AD becomes effective July 25, 2007.

The Director of the Federal Register approved the incorporation by reference of a certain publication listed in the AD as of July 25, 2007.

ADDRESSES: You may examine the AD docket on the Internet at *http://dms.dot.gov* or in person at the U.S. Department of Transportation, Docket Operations, M–30, West Building Ground Floor, Room W12–140, 1200 New Jersey Avenue SE., Washington, DC.

Contact Boeing Commercial Airplanes, Long Beach Division, 3855 Lakewood Boulevard, Long Beach, California 90846, Attention: Data and

Service Management, Dept. C1–L5A (D800–0024), for service information identified in this AD.

FOR FURTHER INFORMATION CONTACT: Daniel Bui, Aerospace Engineer, Systems and Equipment Branch, ANM–130L, FAA, Los Angeles Aircraft Certification Office, 3960 Paramount Boulevard, Lakewood, California 90712–4137; telephone (562) 627–5339; fax (562) 627–5210.

SUPPLEMENTARY INFORMATION:

Examining the Docket

You may examine the airworthiness directive (AD) docket on the Internet at *http://dms.dot.gov* or in person at the Docket Operations office between 9 a.m. and 5 p.m., Monday through Friday, except Federal holidays. The Docket Operations office (telephone (800) 647–5527) is located on the ground floor of the West Building at the street address stated in the **ADDRESSES** section.

Discussion

The FAA issued a notice of proposed rulemaking (NPRM) to amend 14 CFR part 39 to include an AD that would apply to certain McDonnell Douglas Model 717–200 airplanes. That NPRM was published in the **Federal Register** on February 14, 2007 (72 FR 6973). That NPRM proposed to require installing a certain junction(s) and changing the wiring of the first officer's pitot static heater system.

Comments

We provided the public the opportunity to participate in the development of this AD. We have considered the comments received.

Support for the Proposed Rule

AirTran Airways and the National Transportation Safety Board support the proposed actions as described in the NPRM.

Request To Revise ''Relevant Service Information'' Section of the NPRM

Boeing requests that we revise the ''Relevant Service Information'' section of the NPRM to include the following wording: ''The service bulletin describes procedures for changing the first officer's pitot heater wiring to separate the first officer's pitot sensor heater ground from the captain's and auxiliary pitot sensor heater grounds. In addition, to meet system independence, the captain, first officer, and auxiliary pitot sensor's heaters are also activated using the air/ground sensing system.'' Boeing explains that there are more electrical parts than just the ''junction'' to re-wire this system. The revision clarifies the subsequent actions in the service bulletin.

We agree that the suggested wording adds clarification. However, since that section of the preamble does not reappear in the final rule, no change to the final rule is necessary.

Request To Revise Paragraph (f) of the NPRM

Boeing also requests that we revise paragraph (f) of the NPRM to delete the reference to only one electrical component. Boeing explains that there are several electrical items (delete wire, add new wire, sockets, junction, etc.) to implement the wiring changes to this system, and that it is only necessary to refer to Boeing Alert Service Bulletin 717–30A0003, Revision 2, dated November 28, 2006, for this information. (We referred to Boeing Alert Service Bulletin 717–30A0003, Revision 2, in the NPRM as the appropriate source of service information for accomplishing the required actions.)

We agree with Boeing that there are several electrical items required to implement the wiring changes specified in paragraph (f) of the NPRM. The paragraph, as stated in the NPRM, did not include all of those items. We also agree that referring only to the service bulletin in that paragraph will ensure that all items are included. Therefore, we have revised paragraph (f) of this AD to state: ''Within 24 months after the effective date of this AD, change the wiring for the air data sensor heating system, by accomplishing all the actions specified in the Accomplishment Instructions of Boeing Alert Service Bulletin 717–30A0003, Revision 2, dated November 28, 2006.''

Clarification of Alternative Method of Compliance (AMOC) Paragraph

We have revised this action to clarify the appropriate procedure for notifying the principal inspector before using any approved AMOC on any airplane to which the AMOC applies.

Conclusion

We have carefully reviewed the available data, including the comments received, and determined that air safety and the public interest require adopting the AD with the changes described previously. We have determined that these changes will neither increase the economic burden on any operator nor increase the scope of the AD.

Costs of Compliance

There are about 155 airplanes of the affected design in the worldwide fleet. This AD affects about 123 airplanes of U.S. registry. The actions take between 4 and 16 work hours per airplane depending on the airplane configuration, at an average labor rate of $80 per work hour. The manufacturer states that it will supply required parts to the operators at no cost. Based on these figures, the estimated cost of the AD for U.S. operators is between $39,360 and $157,440, or between $320 and $1,280 per airplane, depending on the airplane configuration.

Authority for This Rulemaking

Title 49 of the United States Code specifies the FAA's authority to issue rules on aviation safety. Subtitle I, Section 106, describes the authority of the FAA Administrator. Subtitle VII, Aviation Programs, describes in more detail the scope of the Agency's authority.

We are issuing this rulemaking under the authority described in Subtitle VII, Part A, Subpart III, Section 44701, ''General requirements.'' Under that section, Congress charges the FAA with promoting safe flight of civil aircraft in air commerce by prescribing regulations for practices, methods, and procedures the Administrator finds necessary for safety in air commerce. This regulation is within the scope of that authority because it addresses an unsafe condition that is likely to exist or develop on products identified in this rulemaking action.

Regulatory Findings

We have determined that this AD will not have federalism implications under Executive Order 13132. This AD will not have a substantial direct effect on the States, on the relationship between the national government and the States, or on the distribution of power and responsibilities among the various levels of government.

For the reasons discussed above, I certify that this AD:

(1) Is not a ''significant regulatory action'' under Executive Order 12866;

(2) Is not a ''significant rule'' under DOT Regulatory Policies and Procedures (44 FR 11034, February 26, 1979); and

(3) Will not have a significant economic impact, positive or negative, on a substantial number of small entities under the criteria of the Regulatory Flexibility Act.

We prepared a regulatory evaluation of the estimated costs to comply with this AD and placed it in the AD docket. See the **ADDRESSES** section for a location to examine the regulatory evaluation.

List of Subjects in 14 CFR Part 39

Air transportation, Aircraft, Aviation safety, Incorporation by reference, Safety.

Adoption of the Amendment

■ Accordingly, under the authority delegated to me by the Administrator, the FAA amends 14 CFR part 39 as follows:

PART 39—AIRWORTHINESS DIRECTIVES

■ 1. The authority citation for part 39 continues to read as follows:

Authority: 49 U.S.C. 106(g), 40113, 44701.

§ 39.13 [Amended]

■ 2. The Federal Aviation Administration (FAA) amends § 39.13 by adding the following new airworthiness directive (AD):

2007–13–01 McDonnell Douglas: Amendment 39–15105. Docket No. FAA–2007–27152; Directorate Identifier 2006–NM–219–AD.

Effective Date

(a) This AD becomes effective July 25, 2007.

Affected ADs

(b) None.

Applicability

(c) This AD applies to McDonnell Douglas Model 717–200 airplanes, certificated in any category; as identified in Boeing Alert Service Bulletin 717–30A0003, Revision 2, dated November 28, 2006.

Unsafe Condition

(d) This AD results from a report of temporary loss of the auto-flight function with displays of suspect or erratic airspeed indications. We are issuing this AD to prevent display of suspect or erratic airspeed indications during heavy rain conditions, which could reduce the ability of the flightcrew to maintain the safe flight and landing of the airplane.

Compliance

(e) You are responsible for having the actions required by this AD performed within the compliance times specified, unless the actions have already been done.

Installation and Wiring Change

(f) Within 24 months after the effective date of this AD, change the wiring for the air data sensor heating system, by accomplishing all the actions specified in the Accomplishment Instructions of Boeing Alert Service Bulletin 717–30A0003, Revision 2, dated November 28, 2006.

(g) Actions done before the effective date of this AD in accordance with Boeing Alert Service Bulletin 717–30A0003, Revision 1, dated March 2, 2006, are acceptable for compliance with the corresponding provisions of paragraph (f) of this AD.

Alternative Methods of Compliance (AMOCs)

(h)(1) The Manager, Los Angeles Aircraft Certification Office, FAA, has the authority to approve AMOCs for this AD, if requested in accordance with the procedures found in 14 CFR 39.19.

(2) To request a different method of compliance or a different compliance time for this AD, follow the procedures in 14 CFR 39.19. Before using any approved AMOC on any airplane to which the AMOC applies, notify your appropriate principal inspector (PI) in the FAA Flight Standards District Office (FSDO), or lacking a PI, your local FSDO.

Material Incorporated by Reference

(i) You must use Boeing Alert Service Bulletin 717–30A0003, Revision 2, dated November 28, 2006, to perform the actions that are required by this AD, unless the AD specifies otherwise. The Director of the Federal Register approved the incorporation by reference of this document in accordance with 5 U.S.C. 552(a) and 1 CFR part 51. Contact Boeing Commercial Airplanes, Long Beach Division, 3855 Lakewood Boulevard, Long Beach, California 90846, Attention: Data and Service Management, Dept. C1–L5A (D800–0024), for a copy of this service information. You may review copies at the FAA, Transport Airplane Directorate, 1601 Lind Avenue, SW., Renton, Washington; or at the National Archives and Records Administration (NARA). For information on the availability of this material at NARA, call 202–741–6030, or go to: *http://www.archives.gov/federal-register/cfr/ibr-locations.html.*

Issued in Renton, Washington, on June 8, 2007.

Stephen P. Boyd,

Acting Manager, Transport Airplane Directorate, Aircraft Certification Service.

[FR Doc. E7–11673 Filed 6–19–07; 8:45 am]

BILLING CODE 4910–13–P

DEPARTMENT OF TRANSPORTATION

Federal Aviation Administration

14 CFR Part 39

[Docket No. FAA–2007–27714; Directorate Identifier 2006–NM–277–AD; Amendment 39–15110; AD 2007–13–06]

RIN 2120–AA64

Airworthiness Directives; BAE Systems (Operations) Limited Model BAe 146 and Avro 146–RJ Airplanes

AGENCY: Federal Aviation Administration (FAA), Department of Transportation (DOT).

ACTION: Final rule.

SUMMARY: We are adopting a new airworthiness directive (AD) for the products listed above. This AD results from mandatory continuing airworthiness information (MCAI) originated by an aviation authority of another country to identify and correct an unsafe condition on an aviation product. The MCAI describes the unsafe condition as:

There are four ECS (environmental control system) grilles located in the flight deck side consoles. There have been occurrences where a grille has become detached during flight. There is a risk that a loose grille could foul the rudder pedals and interfere with rudder/brake control resulting in an unsafe condition.

The unsafe condition is a rudder pedal restriction or jam, which could result in reduced controllability of the airplane. We are issuing this AD to require actions to correct the unsafe condition on these products.

DATES: This AD becomes effective July 25, 2007.

The Director of the Federal Register approved the incorporation by reference of certain publications listed in this AD as of July 25, 2007.

ADDRESSES: You may examine the AD docket on the Internet at *http://dms.dot.gov* or in person at the Docket Management Facility, U.S. Department of Transportation, 400 Seventh Street, SW., Nassif Building, Room PL–401, Washington, DC.

FOR FURTHER INFORMATION CONTACT: Todd Thompson, Aerospace Engineer, International Branch, ANM–116, FAA, Transport Airplane Directorate, 1601 Lind Avenue, SW., Renton, Washington 98057–3356; telephone (425) 227–1175; (425) 227–1149.

SUPPLEMENTARY INFORMATION:

Streamlined Issuance of AD

The FAA is implementing a new process for streamlining the issuance of ADs related to MCAI. This streamlined process will allow us to adopt MCAI safety requirements in a more efficient manner and will reduce safety risks to the public. This process continues to follow all FAA AD issuance processes to meet legal, economic, Administrative Procedure Act, and **Federal Register** requirements. We also continue to meet our technical decision-making responsibilities to identify and correct unsafe conditions on U.S.-certificated products.

This AD references the MCAI and related service information that we considered in forming the engineering basis to correct the unsafe condition. The AD contains text copied from the MCAI and for this reason might not follow our plain language principles.

Discussion

We issued a notice of proposed rulemaking (NPRM) to amend 14 CFR part 39 to include an AD that would apply to the specified products. That NPRM was published in the **Federal Register** on March 28, 2007 (72 FR 14500). That NPRM proposed to correct an unsafe condition for the specified products. The MCAI states:

> There are four ECS (environmental control system) grilles located in the flight deck side consoles. There have been occurrences where a grille has become detached during flight. There is a risk that a loose grille could foul the rudder pedals and interfere with rudder/brake control resulting in an unsafe condition.

The unsafe condition is a rudder pedal restriction or jam, which could result in reduced controllability of the airplane. The MCAI requires modifying the grilles. You may obtain further information by examining the MCAI in the AD docket.

Comments

We gave the public the opportunity to participate in developing this AD. We received no comments on the NPRM or on the determination of the cost to the public.

Conclusion

We reviewed the available data and determined that air safety and the public interest require adopting the AD as proposed.

Differences Between This AD and the MCAI or Service Information

We have reviewed the MCAI and related service information and, in general, agree with their substance. But we might have found it necessary to use different words from those in the MCAI to ensure the AD is clear for U.S. operators and is enforceable. In making these changes, we do not intend to differ substantively from the information provided in the MCAI and related service information.

We might also have required different actions in this AD from those in the MCAI in order to follow our FAA policies. Any such differences are highlighted in a NOTE within the AD.

Costs of Compliance

We estimate that this AD will affect 10 products of U.S. registry. We also estimate that it will take about 3 work-hours per product to comply with the basic requirements of this AD. The average labor rate is $80 per work-hour. Required parts will cost about $6,893 per product. Where the service information lists required parts costs that are covered under warranty, we have assumed that there will be no charge for these parts. As we do not control warranty coverage for affected parties, some parties may incur costs higher than estimated here. Based on these figures, we estimate the cost of this AD to the U.S. operators to be $71,330, or $7,133 per product.

Authority for This Rulemaking

Title 49 of the United States Code specifies the FAA's authority to issue rules on aviation safety. Subtitle I, section 106, describes the authority of the FAA Administrator. ''Subtitle VII: Aviation Programs,'' describes in more detail the scope of the Agency's authority.

We are issuing this rulemaking under the authority described in ''Subtitle VII, Part A, Subpart III, Section 44701: General requirements.'' Under that section, Congress charges the FAA with promoting safe flight of civil aircraft in air commerce by prescribing regulations for practices, methods, and procedures the Administrator finds necessary for safety in air commerce. This regulation is within the scope of that authority because it addresses an unsafe condition that is likely to exist or develop on products identified in this rulemaking action.

Regulatory Findings

We determined that this AD will not have federalism implications under Executive Order 13132. This AD will not have a substantial direct effect on the States, on the relationship between the national government and the States, or on the distribution of power and responsibilities among the various levels of government.

For the reasons discussed above, I certify this AD:

1. Is not a ''significant regulatory action'' under Executive Order 12866;
2. Is not a ''significant rule'' under the DOT Regulatory Policies and Procedures (44 FR 11034, February 26, 1979); and
3. Will not have a significant economic impact, positive or negative, on a substantial number of small entities under the criteria of the Regulatory Flexibility Act.

We prepared a regulatory evaluation of the estimated costs to comply with this AD and placed it in the AD docket.

Examining the AD Docket

You may examine the AD docket on the Internet at *http://dms.dot.gov;* or in person at the Docket Management Facility between 9 a.m. and 5 p.m., Monday through Friday, except Federal holidays. The AD docket contains the NPRM, the regulatory evaluation, any comments received, and other information. The street address for the Docket Office (telephone (800) 647–5227) is in the **ADDRESSES** section. Comments will be available in the AD docket shortly after receipt.

List of Subjects in 14 CFR Part 39

Air transportation, Aircraft, Aviation safety, Incorporation by reference, Safety.

Adoption of the Amendment

■ Accordingly, under the authority delegated to me by the Administrator, the FAA amends 14 CFR part 39 as follows:

PART 39—AIRWORTHINESS DIRECTIVES

■ 1. The authority citation for part 39 continues to read as follows:

Authority: 49 U.S.C. 106(g), 40113, 44701.

§ 39.13 [Amended]

■ 2. The FAA amends § 39.13 by adding the following new AD:

2007–13–06 BAE Systems (Operations) Limited (Formerly British Aerospace Regional Aircraft): Amendment 39–15110. Docket No. FAA–2007–27714; Directorate Identifier 2006–NM–277–AD.

Effective Date

(a) This airworthiness directive (AD) becomes effective July 25, 2007.

Affected ADs

(b) None.

Applicability

(c) This AD applies to BAE Systems (Operations) Limited Model BAe 146–100A, –200A, and –300A series airplanes, and Model Avro 146–RJ70A, 146–RJ85A, and 146–RJ100A airplanes; certificated in any category; which have modification HCM00674A embodied.

Reason

(d) The mandatory continuing airworthiness information (MCAI) states:

> There are four ECS (environmental control system) grilles located in the flight deck side consoles. There have been occurrences where a grille has become detached during flight. There is a risk that a loose grille could foul the rudder pedals and interfere with rudder/brake control resulting in an unsafe condition.

The unsafe condition is a rudder pedal restriction or jam, which could result in reduced controllability of the airplane. The MCAI requires modifying the grilles.

Subject

(e) Equipment/Furnishings.

Actions and Compliance

(f) Within 6 months after the effective date of this AD, unless already done, carry out the modification of the ECS grilles as described in BAE Systems (Operations) Limited Modification Service Bulletin SB.25–495–

60730A, dated March 14, 2006; or Revision 1, dated May 9, 2006.

FAA AD Differences

Note: This AD differs from the MCAI and/or service information as follows: No Differences.

Other FAA AD Provisions

(g) The following provisions also apply to this AD:

(1) Alternative Methods of Compliance (AMOCs): The Manager, International Branch, ANM–116, FAA, Transport Airplane Directorate, has the authority to approve AMOCs for this AD, if requested using the procedures found in 14 CFR 39.19. Send information to ATTN: Todd Thompson, Aerospace Engineer, International Branch, ANM–116, FAA, Transport Airplane Directorate, 1601 Lind Avenue, SW., Renton, Washington 98057–3356; telephone (425) 227–1175; (425) 227–1149. Before using any approved AMOC on any airplane to which the AMOC applies, notify your appropriate principal inspector (PI) in the FAA Flight Standards District Office (FSDO), or lacking a PI, your local FSDO.

(2) Airworthy Product: For any requirement in this AD to obtain corrective actions from a manufacturer or other source, use these actions if they are FAA-approved. Corrective actions are considered FAA-approved if they are approved by the State of Design Authority (or their delegated agent). You are required to assure the product is airworthy before it is returned to service.

(3) Reporting Requirements: For any reporting requirement in this AD, under the provisions of the Paperwork Reduction Act, the Office of Management and Budget (OMB) has approved the information collection requirements and has assigned OMB Control Number 2120–0056.

Related Information

(h) Refer to MCAI European Aviation Safety Agency Airworthiness Directive 2006–0342, dated November 9, 2006; and BAE Systems (Operations) Limited Modification Service Bulletin SB.25–495–60730A, dated March 14, 2006; or Revision 1, dated May 9, 2006; for related information.

Material Incorporated by Reference

(i) You must use BAE Systems (Operations) Limited Modification Service Bulletin SB.25–495–60730A, dated March 14, 2006; or BAE Systems (Operations) Limited Modification Service Bulletin SB.25–495–60730A, Revision 1, dated May 9, 2006; to do the actions required by this AD, unless the AD specifies otherwise.

(1) The Director of the Federal Register approved the incorporation by reference of this service information under 5 U.S.C. 552(a) and 1 CFR part 51.

(2) For service information identified in this AD, contact British Aerospace Regional Aircraft American Support, 13850 Mclearen Road, Herndon, Virginia 20171.

(3) You may review copies at the FAA, Transport Airplane Directorate, 1601 Lind Avenue, SW., Renton, Washington; or at the National Archives and Records Administration (NARA). For information on the availability of this material at NARA, call (202) 741–6030, or go to: *http://www.archives.gov/federal-register/cfr/ibr-locations.html.*

Issued in Renton, Washington, on June 8, 2007.

Stephen P. Boyd,

Acting Manager, Transport Airplane Directorate, Aircraft Certification Service.

[FR Doc. E7–11675 Filed 6–19–07; 8:45 am]

BILLING CODE 4910–13–P

DEPARTMENT OF TRANSPORTATION

Federal Aviation Administration

14 CFR Part 39

[Docket No. FAA–2006–25973; Directorate Identifier 2006–NM–178–AD; Amendment 39–15109; AD 2007–13–05]

RIN 2120–AA64

Airworthiness Directives; Boeing Model 777 Airplanes

AGENCY: Federal Aviation Administration (FAA), Department of Transportation (DOT).

ACTION: Final rule.

SUMMARY: The FAA is adopting a new airworthiness directive (AD) for all Boeing Model 777 airplanes. This AD requires repetitive measurements of the freeplay of the right and left elevators, rudder, and rudder tab, and related investigative and corrective actions if necessary. This AD also requires repetitive lubrication of the elevator, rudder, and rudder tab components. This AD results from reports of freeplay-induced vibration of unbalanced control surfaces. Excessive freeplay of control surfaces can cause unacceptable airframe vibration during flight. The potential for vibration of the control surface should be avoided because the point of transition from vibration to divergent flutter is unknown. We are issuing this AD to prevent flutter, which can cause damage to the control surface structure and consequent loss of control of the airplane.

DATES: This AD becomes effective July 25, 2007.

The Director of the Federal Register approved the incorporation by reference of a certain publication listed in the AD as of July 25, 2007.

ADDRESSES: You may examine the AD docket on the Internet at *http://dms.dot.gov* or in person at the Docket Management Facility, U.S. Department of Transportation, 400 Seventh Street SW., Nassif Building, Room PL–401, Washington, DC.

Contact Boeing Commercial Airplanes, P.O. Box 3707, Seattle, Washington 98124–2207, for service information identified in this AD.

FOR FURTHER INFORMATION CONTACT: Dennis Stremick, Aerospace Engineer, Airframe Branch, ANM–120S, FAA, Seattle Aircraft Certification Office, 1601 Lind Avenue, SW., Renton, Washington 98057–3356; telephone (425) 917–6450; fax (425) 917–6590.

SUPPLEMENTARY INFORMATION:

Examining the Docket

You may examine the airworthiness directive (AD) docket on the Internet at *http://dms.dot.gov* or in person at the Docket Management Facility office between 9 a.m. and 5 p.m., Monday through Friday, except Federal holidays. The Docket Management Facility office (telephone (800) 647–5227) is located on the plaza level of the Nassif Building at the street address stated in the **ADDRESSES** section.

Discussion

The FAA issued a notice of proposed rulemaking (NPRM) to amend 14 CFR part 39 to include an AD that would apply to all Boeing Model 777 airplanes. That NPRM was published in the **Federal Register** on October 3, 2006 (71 FR 58323). That NPRM proposed to require repetitive measurements of the freeplay of the right and left elevators, rudder, and rudder tab, and related investigative and corrective actions if necessary. That NPRM also proposed to require repetitive lubrication of the elevator, rudder, and rudder tab components.

Comments

We provided the public the opportunity to participate in the development of this AD. We have considered the comments received.

Support for the NPRM

Boeing and United Airlines support the contents of the NPRM.

Request To Accomplish Repetitive Actions at the Later of the Compliance Times

United Airlines requests that we revise the compliance times for the repetitive freeplay measurements and lubrication to specify doing those actions at the later of the proposed compliance times (i.e., whichever occurs later). Boeing Special Attention Service Bulletin 777–27–0062, dated July 18, 2006, recommends repeating the freeplay measurement at intervals of 12,000 flight hours or 36 months, whichever occurs first, and repeating the lubrication at intervals of 5,000 flight hours or 16 months, whichever occurs first. As justification, United

Airlines states that the change would allow operators to accomplish the actions within the thresholds specified in the Boeing 777 Maintenance Planning Document (MPD).

We disagree with allowing operators to perform the repetitive actions at the later of the compliance times. Accomplishing the repetitive freeplay measurements and lubrication at the compliance times specified in the MPD has not prevented the unsafe condition from occurring in service on other Boeing airplane models that incorporate the same design features. In developing an appropriate compliance time for this action, we considered the urgency associated with the subject unsafe condition, the practical aspect of accomplishing the required actions within an interval of time that corresponds to the normal scheduled maintenance for most affected operators, and the recommendation of the manufacturer. However, according to the provisions of paragraph (j) of this AD, we may approve requests to adjust the compliance time if the request includes data that substantiate that the new compliance time would provide an acceptable level of safety. We have not changed this AD in this regard.

Request To Revise Compliance Times

British Airways and United Airlines request that we revise the compliance times for the repetitive freeplay measurements and lubrication to match the times in the Boeing 777 MPD. Both commenters state that the MPD requires the freeplay measurement at intervals of 18,000 flight hours and requires the lubrication at intervals of 6,000 flight hours or 560 days. As justification, British Airways states the following: (1) It has been performing these tasks in accordance with the Boeing 777 MPD with no adverse findings for its fleet, (2) it uses BMS 3–33 grease for the lubrication, which improves service life over MIL–PRF–23827C, and (3) Boeing has not reported any freeplay issues on Model 777 airplanes or provided justification for recommending different intervals in the service bulletin. British Airways also states that it considers the MPD intervals adequate and that mandating the intervals in Boeing Special Attention Service Bulletin 777–27–0062, dated July 18, 2006, would not significantly improve safety.

We disagree with revising the compliance times. Accomplishing the required freeplay measurements and lubrication at the compliance times specified in the MPD has not prevented the unsafe condition from occurring in service on other Boeing airplane models that incorporate the same design features. Further, Boeing has advised us that it intends to pursue revising the MPD task to reflect the compliance times specified in this AD at the next revision cycle of the document. We have determined that the compliance times specified in the service bulletin will ensure an acceptable level of safety. However, according to the provisions of paragraph (j) of this AD, we may approve requests to adjust the compliance time if the request includes data that prove that the new compliance time would provide an acceptable level of safety. No change to this AD is necessary in this regard.

Request for Credit for Accomplishment of Certain MPD Tasks

Air China asks if accomplishment of Tasks 12–002–01, 12–004–00, 27–240–00, and 27–430–00 of the Boeing 777 MPD is acceptable for compliance with the initial freeplay check and lubrication. United Airlines also requests that airplanes maintained in accordance with these tasks be considered in compliance.

We do not agree to allow the MPD tasks as an acceptable source of service information for accomplishing the freeplay measurement. We find that neither appropriate procedures nor applicable limits are, at this time, specified in the MPD tasks that describe accomplishing the inspections and lubrication. Thus, the MPD tasks are not adequate to ensure that an acceptable level of safety is maintained. However, according to the provisions of paragraph (j) of this AD, we may approve a request of an alternative method of compliance (AMOC) if data are presented to substantiate that the actions provide an acceptable level of safety. We have not changed this AD in this regard.

Request To Publish Service Information

The Modification and Replacement Parts Association (MARPA) states that, typically, ADs are based on service information originating with the type certificate holder or its suppliers. MARPA adds that manufacturer service documents are privately authored instruments generally having copyright protection against duplication and distribution. MARPA notes that when a service document is incorporated by reference into a public document, such as an AD, it loses its private, protected status and becomes a public document. MARPA adds that if a service document is used as a mandatory element of compliance, it should not simply be referenced, but should be incorporated into the regulatory document; by definition, public laws must be public, which means they cannot rely upon private writings. MARPA adds that incorporated by reference service documents should be made available to the public by publication in the Department of Transportation's Docket Management System (DMS), keyed to the action that incorporates them. MARPA notes that the stated purpose of the incorporation by reference method is brevity, to keep from expanding the **Federal Register** needlessly by publishing documents already in the hands of the affected individuals; traditionally, ''affected individuals'' means aircraft owners and operators, who are generally provided service information by the manufacturer. MARPA adds that a new class of affected individuals has emerged, since the majority of aircraft maintenance is now performed by specialty shops instead of aircraft owners and operators. MARPA notes that this new class includes maintenance and repair organizations, component servicing and repair shops, parts purveyors and distributors, and organizations manufacturing or servicing alternatively certified parts under section 21.303 (''Replacement and modification parts'') of the Federal Aviation Regulations (14 CFR 21.303). MARPA adds that the concept of brevity is now nearly archaic as documents exist more frequently in electronic format than on paper. Therefore, MARPA asks that the service document deemed essential to the accomplishment of the NPRM be incorporated by reference into the regulatory instrument and published in DMS.

We acknowledge MARPA's comment concerning incorporation by reference. The Office of the Federal Register (OFR) requires that documents that are necessary to accomplish the requirements of the AD be incorporated by reference during the final rule phase of rulemaking. This AD incorporates by reference the document necessary for the accomplishment of the requirements mandated by this AD. Further, we point out that while documents that are incorporated by reference do become public information, they do not lose their copyright protection. For that reason, we advise the public to contact the manufacturer to obtain copies of the referenced service information.

In regard to the commenter's request to post the service bulletin on DMS, we are currently in the process of reviewing issues surrounding the posting of service bulletins on DMS as part of an AD docket. Once we have thoroughly examined all aspects of this issue and have made a final determination, we will consider whether our current practice needs to be revised. No change

to this AD is necessary in response to this comment.

Conclusion

We have carefully reviewed the available data, including the comments received, and determined that air safety and the public interest require adopting the AD as proposed.

Costs of Compliance

There are about 695 airplanes of the affected design in the worldwide fleet. The following table provides the estimated costs, at an average labor rate of $80 per work hour, for U.S. operators to comply with this AD.

ESTIMATED COSTS

Action	Work hours	Cost per airplane	Number of U.S.-registered airplanes	Fleet cost
Measurement of elevators	4	$320, per measurement cycle	145	$46,400, per measurement cycle.
Lubrication of elevators	17	$1,360, per lubrication cycle	145	$197,200, per lubrication cycle.
Measurement of rudder	4	$320, per measurement cycle	145	$46,400, per measurement cycle.
Lubrication of rudder	7	$560, per lubrication cycle	145	$81,200, per lubrication cycle.
Measurement of rudder tab	3	$240, per measurement cycle	145	$34,800, per measurement cycle.
Lubrication of rudder tab	5	$400, per lubrication cycle	145	$58,000, per lubrication cycle.

Authority for This Rulemaking

Title 49 of the United States Code specifies the FAA's authority to issue rules on aviation safety. Subtitle I, Section 106, describes the authority of the FAA Administrator. Subtitle VII, Aviation Programs, describes in more detail the scope of the Agency's authority.

We are issuing this rulemaking under the authority described in Subtitle VII, Part A, Subpart III, Section 44701, ''General requirements.'' Under that section, Congress charges the FAA with promoting safe flight of civil aircraft in air commerce by prescribing regulations for practices, methods, and procedures the Administrator finds necessary for safety in air commerce. This regulation is within the scope of that authority because it addresses an unsafe condition that is likely to exist or develop on products identified in this rulemaking action.

Regulatory Findings

We have determined that this AD will not have federalism implications under Executive Order 13132. This AD will not have a substantial direct effect on the States, on the relationship between the national government and the States, or on the distribution of power and responsibilities among the various levels of government.

For the reasons discussed above, I certify that this AD:

(1) Is not a ''significant regulatory action'' under Executive Order 12866;

(2) Is not a ''significant rule'' under DOT Regulatory Policies and Procedures (44 FR 11034, February 26, 1979); and

(3) Will not have a significant economic impact, positive or negative, on a substantial number of small entities under the criteria of the Regulatory Flexibility Act.

We prepared a regulatory evaluation of the estimated costs to comply with this AD and placed it in the AD docket. See the **ADDRESSES** section for a location to examine the regulatory evaluation.

List of Subjects in 14 CFR Part 39

Air transportation, Aircraft, Aviation safety, Incorporation by reference, Safety.

Adoption of the Amendment

■ Accordingly, under the authority delegated to me by the Administrator, the FAA amends 14 CFR part 39 as follows:

PART 39—AIRWORTHINESS DIRECTIVES

■ 1. The authority citation for part 39 continues to read as follows:

Authority: 49 U.S.C. 106(g), 40113, 44701.

§ 39.13 [Amended]

■ 2. The Federal Aviation Administration (FAA) amends § 39.13 by adding the following new airworthiness directive (AD):

2007–13–05 Boeing: Amendment 39–15109. Docket No. FAA–2006–25973; Directorate Identifier 2006–NM–178–AD.

Effective Date

(a) This AD becomes effective July 25, 2007.

Affected ADs

(b) None.

Applicability

(c) This AD applies to all Boeing Model 777–200, –200LR, –300, and –300ER series airplanes, certificated in any category.

Unsafe Condition

(d) This AD results from reports of freeplay-induced vibration of unbalanced control surfaces. Excessive freeplay of control surfaces can cause unacceptable airframe vibration during flight. The potential for vibration of the control surface should be avoided because the point of transition from vibration to divergent flutter is unknown. We are issuing this AD to prevent flutter, which can cause damage to the control surface structure and consequent loss of control of the airplane.

Compliance

(e) You are responsible for having the actions required by this AD performed within the compliance times specified, unless the actions have already been done.

Repetitive Measurements

(f) At the applicable times specified in Tables 1, 2, and 3 of paragraph 1.E., ''Compliance,'' of Boeing Special Attention Service Bulletin 777–27–0062, dated July 18, 2006, except as provided by paragraph (i) of this AD: Measure the freeplay of the right and left elevators, rudder, and rudder tab; and do all related investigative and corrective actions before further flight; by accomplishing all the actions specified in Parts 1, 3, and 5 of the Accomplishment Instructions of Boeing Special Attention Service Bulletin 777–27–0062, dated July 18, 2006, as applicable. Repeat the measurements and related investigative and corrective actions thereafter at the interval specified in Table 1, 2, or 3 of the service bulletin, as applicable.

Repetitive Lubrication

(g) At the applicable times specified in Tables 1, 2, and 3 of paragraph 1.E., ''Compliance,'' of Boeing Special Attention Service Bulletin 777–27–0062, dated July 18, 2006, except as provided by paragraph (i) of this AD: Lubricate the elevator components, rudder components, and rudder tab components, by accomplishing all the actions specified in Parts 2, 4, and 6 of the Accomplishment Instructions of Boeing Special Attention Service Bulletin 777–27–0062, dated July 18, 2006, as applicable. Repeat the lubrication thereafter at the interval specified in Table 1, 2, or 3 of the service bulletin, as applicable.

Concurrent Compliance Times

(h) If a freeplay measurement of a specified part required by paragraph (f) of this AD and a lubrication of the same part required by paragraph (g) of this AD are due at the same time or will be accomplished during the same maintenance visit, the freeplay measurement and all related investigative and corrective actions must be done before the lubrication is accomplished.

Exceptions to Compliance Times

(i) Where Boeing Special Attention Service Bulletin 777–27–0062, dated July 18, 2006, recommends an initial compliance threshold of ''Within 36 months after the date on this service bulletin'' for Parts 1, 3, and 5 of the service bulletin, this AD requires an initial compliance threshold of ''within 36 months after the effective date of this AD.'' Where Boeing Special Attention Service Bulletin 777–27–0062, dated July 18, 2006, recommends an initial compliance threshold of ''Within 16 months after the date on this service bulletin'' for Parts 2, 4, and 6 of the service bulletin, this AD requires an initial compliance threshold of ''within 16 months after the effective date of this AD.''

Alternative Methods of Compliance (AMOCs)

(j)(1) The Manager, Seattle Aircraft Certification Office (ACO), FAA, has the authority to approve AMOCs for this AD, if requested in accordance with the procedures found in 14 CFR 39.19.

(2) Before using any AMOC approved in accordance with § 39.19 on any airplane to which the AMOC applies, notify the appropriate principal inspector in the FAA Flight Standards Certificate Holding District Office.

(3) An AMOC that provides an acceptable level of safety may be used for any repair required by this AD, if it is approved by an Authorized Representative for the Boeing Commercial Airplanes Delegation Option Authorization Organization who has been authorized by the Manager, Seattle ACO, to make those findings. For a repair method to be approved, the repair must meet the certification basis of the airplane, and the approval must specifically refer to this AD.

Material Incorporated by Reference

(k) You must use Boeing Special Attention Service Bulletin 777–27–0062, dated July 18, 2006, to perform the actions that are required by this AD, unless the AD specifies otherwise. The Director of the Federal Register approved the incorporation by reference of this document in accordance with 5 U.S.C. 552(a) and 1 CFR part 51. Contact Boeing Commercial Airplanes, P.O. Box 3707, Seattle, Washington 98124–2207, for a copy of this service information. You may review copies at the FAA, Transport Airplane Directorate, 1601 Lind Avenue, SW., Renton, Washington; or at the National Archives and Records Administration (NARA). For information on the availability of this material at the NARA, call (202) 741–6030, or go to: *http://www.archives.gov/federal-register/cfr/ibr-locations.html.*

Issued in Renton, Washington, on April 11, 2007.

Ali Bahrami,

Manager, Transport Airplane Directorate, Aircraft Certification Service.

[FR Doc. E7–11676 Filed 6–19–07; 8:45 am]

BILLING CODE 4910–13–P

DEPARTMENT OF TRANSPORTATION

Federal Aviation Administration

14 CFR Part 39

[Docket No. FAA–2006–23803; Directorate Identifier 2005–NM–238–AD; Amendment 39–15108; AD 2007–13–04]

RIN 2120–AA64

Airworthiness Directives; Boeing Model 747–400, 747–400D, and 747–400F Series Airplanes

AGENCY: Federal Aviation Administration (FAA), Department of Transportation (DOT).

ACTION: Final rule.

SUMMARY: The FAA is superseding an existing airworthiness directive (AD), which applies to all Boeing Model 747–400, –400D, and –400F series airplanes. That AD currently requires revising the airplane flight manual (AFM) to require the flightcrew to maintain certain minimum fuel levels in the center fuel tanks, and to prohibit the use of the horizontal stabilizer fuel tank. This new AD requires installing new integrated display system (IDS) software; and also requires revising the AFM to include procedures to prevent dry operation of the center wing and horizontal stabilizer fuel tanks, for maintaining minimum fuel levels, and for de-fueling fuel tanks. For certain airplanes, this new AD also requires removing certain program pin ground wires of the IDS. This AD results from fuel system reviews conducted by the manufacturer. We are issuing this AD to reduce the potential for ignition sources inside fuel tanks, which, in combination with flammable fuel vapors, could result in fuel tank explosions and consequent loss of the airplane.

DATES: This AD becomes effective July 25, 2007.

The Director of the Federal Register approved the incorporation by reference of certain publications listed in the AD as of July 25, 2007.

ADDRESSES: You may examine the AD docket on the Internet at *http://dms.dot.gov* or in person at the U.S. Department of Transportation, Docket Operations, M–30, West Building Ground Floor, Room W12–140, 1200 New Jersey Avenue SE., Washington, DC.

Contact Boeing Commercial Airplanes, P.O. Box 3707, Seattle, Washington 98124–2207, for service information identified in this AD.

FOR FURTHER INFORMATION CONTACT: Sulmo Mariano, Aerospace Engineer, Propulsion Branch, ANM–140S, FAA, Seattle Aircraft Certification Office, 1601 Lind Avenue, SW., Renton, Washington 98057–3356; telephone (425) 917–6501; fax (425) 917–6590.

SUPPLEMENTARY INFORMATION:

Examining the Docket

You may examine the AD docket on the Internet at *http://dms.dot.gov* or in person at the Docket Management Facility office between 9 a.m. and 5 p.m., Monday through Friday, except Federal holidays. The Docket Operations office (telephone (800) 647–5527) is located on the ground floor of the West Building at the DOT street address stated in the **ADDRESSES** section.

Discussion

The FAA issued a notice of proposed rulemaking (NPRM) to amend 14 CFR part 39 to include an AD that supersedes AD 2002–24–52, amendment 39–12993 (68 FR 14, January 2, 2003). The existing AD applies to certain Boeing Model 747–400, 747–400D, and 747–400F series airplanes. That NPRM was published in the **Federal Register** on February 8, 2006 (71 FR 6404). That NPRM proposed to continue to require revising the airplane flight manual (AFM) to require the flightcrew to maintain certain minimum fuel levels in the center fuel tanks, and to prohibit the use of the horizontal stabilizer fuel tank. That NPRM also proposed to require installing new integrated display software (IDS) in the integrated display units and electronic flight instrument system/engine indication and crew alerting system (EICAS) interface units (EIUs) of the flight deck. In addition, that NPRM proposed to require revising the AFM to include procedures to prevent dry operation of the center wing and horizontal stabilizer fuel tanks; for maintaining minimum fuel levels; and for de-fueling fuel tanks. For certain airplanes, that NPRM also proposed to require removing G13 pin ground wires of a certain wire integration unit of the EIUs at certain connector locations.

Comments

We have considered the following comments on the NPRM.

Request To Supersede Another AD

Japan Airlines requests that paragraph (b) of the NPRM be revised to supersede

AD 2002–24–51, amendment 39–12992 (68 FR 10, January 2, 2003), in addition to AD 2002–24–52. Japan Airlines believes that Boeing Model 747–400 series airplanes are still subject to the requirements of AD 2002–24–51.

We do not agree. This AD supersedes AD 2002–24–52 and affects Boeing Model 747–400, –400D, and –400F airplanes identified in paragraph (c) of this AD. AD 2002–24–52 superseded (cancelled) the requirements of only paragraph (d) of AD 2002–24–51, as indicated in paragraph (a) of AD 2002–24–52 (paragraph (f) of this AD). Operators of affected airplanes identified in AD 2002–24–51 must comply with the remaining applicable requirements of that AD. This new AD retains all requirements of AD 2002–24–52. As a result, certain paragraph identifiers of AD 2002–24–51 have been changed in this AD. We have made no change to the AD in this regard.

Requests To Explain Why Earlier Software Version Is Not Acceptable for Compliance

The Air Transport Association (ATA), on behalf of one of its members, Northwest Airlines (NWA), and Japan Airlines request that we explain why installation of IDS–504 software is mandatory whereas installation of IDS–503 software has not been mandated by any AD. Japan Airlines and NWA believe that IDS–503 software is the same as IDS–504 software for EICAS messaging logic for operating fuel pumps.

We agree with the commenters' requests to explain why installation of IDS–504 software is mandatory. IDS–503 software provides redundant indication of impending dry operation of a fuel pump for the center wing tank (CWT), but provides indication of fuel pump low pressure for only the horizontal stabilizer tank (HST). IDS–504 software provides redundant indication to the flightcrew of impending dry operation of a fuel pump for both the CWT and HST. As discussed in the NPRM, the preamble to AD 2002–24–52 explains that we consider the requirements in that AD ''interim action,'' and that we were considering further rulemaking. We now have determined that further rulemaking is necessary to require installation of IDS–504 software (final action) to address the identified unsafe condition, and this AD follows from that determination.

Requests To Allow Other IDS Software Versions

Boeing, Japan Airlines, NWA, and United Airlines request that certain IDS software versions (and related service information) other than IDS–504 software be acceptable for compliance with the requirements of paragraph (h) of the NPRM. The commenters provide the following justifications for their requests.

1. United Airlines, and ATA, on behalf of NWA, state that the FAA has previously approved alternative method of compliance (AMOC) 140S–03–173 to AD 2002–24–52 (reference Boeing Alert Service Bulletin 747–31A2341, Revision 1, dated November 20, 2003), which installed IDS–503 software. United and NWA believe the requirements in the NPRM are met by incorporating that AMOC. United Airlines and NWA note that Boeing Alert Service Bulletins 747–31A2341, Revision 1, and 747–31A2352, Revision 1, dated March 17, 2005, state, ''The baseline installation of this IDS–504 software (no program pin changes) will provide messaging associated with fuel pump operation that is identical to the IDS–503 messaging.'' Boeing states that the results of a software logic review indicate that the alert messaging of the IDS–503 software for the HST and CWT is identical to that of the IDS–504 software. Boeing notes that it has issued service information for installing IDS–503 software.

We partially agree. We do not agree with the commenters that IDS–503 software messages are identical to those of IDS–504 software. We have confirmed with Boeing that IDS–504 software contains different EICAS messages related to fuel pump operation depending on which hardware program pin is connected to an electrical ground. Only one of those available configurations provides fuel pump messages identical to those of IDS–503 software. In AMOC 140S–03–173, we approved that particular configuration as an AMOC to AD 2002–24–52 for active monitoring of the fuel quantity for both the CWT and HST, because it provided an improvement to the shutoff procedure required by that AD. However, we did not consider that AMOC to be acceptable as a final configuration. As explained in the ''Requests To Explain Why Earlier Software Version Is Not Acceptable for Compliance'' section of this AD, we consider the requirements of AD 2002–24–52 to be interim action. Installation of IDS–504 software will provide a higher level of safety than the interim requirements of AD 2002–24–52, because the flightcrew will no longer be required to actively monitor fuel tank quantity to determine the appropriate time to shut off the fuel pumps.

We do agree with the commenters that IDS–503 software should be considered acceptable for compliance with the requirements in paragraph (h), but only for affected airplanes not equipped with an HST. Therefore, we have added new paragraph (j) to this AD (and redesignated subsequent paragraphs) to include that provision. In addition, we have revised ''new IDS software'' to ''new IDS–504 software'' in paragraphs (h) and (i) of this AD to clarify which software version those paragraphs are referring to and to distinguish that software version from the other software version specified in new paragraph (j).

2. Boeing and United Airlines state that the alert messaging of IDS–505 (delivered in production only) and IDS–506 software for the HST and CWT is identical to that of IDS–504 software. Boeing notes that no service information is available for installation of IDS–505 software, and that the service bulletins for installing IDS–506 software have not yet been released. Japan Airlines notes that IDS–505 and –506 software have been already released, and that it would need to request an AMOC to the requirements of the NPRM.

We agree with the commenters that IDS–505 software installed during production of the airplane and IDS–506 software installed either during production of the airplane or in service are acceptable substitutes for IDS–504 software. As noted by Boeing, there is no service information for installation of IDS–505 software (IDS–505 software is being installed only during production). Since Boeing submitted its NPRM comments, it has issued and we have approved the service bulletins in the following table for installing IDS–506 software as an acceptable method of compliance with the requirements of paragraph (h) of this AD:

TABLE.—ACCEPTABLE SERVICE BULLETINS FOR INSTALLATION OF IDS–506 SOFTWARE

Boeing service bulletin—	For model—
747–31–2376, dated September 5, 2006	747–400, –400D, and –400F series airplanes.
747–31–2377, dated September 5, 2006	747–400 and –400F series airplanes.

TABLE.—ACCEPTABLE SERVICE BULLETINS FOR INSTALLATION OF IDS–506 SOFTWARE—Continued

Boeing service bulletin—	For model—
747–31–2378, dated September 5, 2006	747–400 and –400F series airplanes.

Each of these service bulletins refers to Rockwell Collins Service Bulletins IDS–7000–31–52, IDS–7000–31–53, and IDS–7000–31–54, as applicable; all dated August 30, 2006; as applicable; as an additional source of service information for installing the IDS–506 software. Therefore, we have added new paragraph (k) to this AD (and redesignated subsequent paragraphs) that allows either installing IDS–505 in production or IDS–506 software in production or in service as an acceptable method of compliance with the requirements of paragraph (h). We also have included new Note 3, which provides information about the Rockwell Collins service bulletins identified previously. In addition, we have revised paragraph (i) of this AD to allow installing IDS–504 software ''during production of the airplane'' as an acceptable method of compliance with the requirements of paragraph (h).

Request To Revise Compliance Time for Installing New IDS Software

Boeing requests that the compliance time in paragraph (h) of the NPRM for installing new IDS software be revised from 6 months to 12 months. Boeing cites several reasons for their request (develop internal engineering, acquire necessary parts, accomplish the change without creating flight schedule interruptions, etc.).

We do not agree. In developing an appropriate compliance time for installing new IDS software, we considered the safety implications and the practical aspect of accomplishing the installation within a period of time that corresponds to the normal scheduled maintenance for most affected operators. In addition, we considered the facts that the installation takes three work hours, parts (software diskettes) are readily available and easily transportable, and many of the approximately 520 affected airplanes worldwide have already been modified. Furthermore, during development of the NPRM, we had several meetings with Boeing to determine the appropriate compliance time. In consideration of these items, we have determined that a 6-month compliance time will ensure an acceptable level of safety and allow the installation to be done during scheduled maintenance intervals for most affected operators. We have made no change to the AD in this regard.

Request To Revise Requirements for Removing Pin Ground Wires of the FR-HiTemp Fuel Pumps

Boeing requests that the fourth paragraph of the ''FAA's Determination and Requirements of the Proposed AD'' section of the NPRM be revised for clarification purposes. Boeing suggests removing the wording that parallels the procedures specified in Boeing Service Bulletin 747–28–2258, Revision 1, dated August 11, 2005, for identification and location of the ground wire, and in Boeing Standard Wiring Practices Manual (SWPM) 20–72–18 for removal of the ground wires. (Boeing Service Bulletin 747–28–2258 describes procedures for installing FR-HiTemp fuel pumps.)

We partially agree. We do not agree with Boeing's suggestion to refer to Boeing Service Bulletin 747–28–2258, Revision 1, and Boeing SWPM 20–72–18, as appropriate sources of service information for accomplishing the wire removal specified in paragraph (l) of this AD (paragraph (j) of the NPRM). We acknowledge that Boeing Service Bulletin 747–28–2258 contains procedures for identification and location of the ground wire to be removed; however, it does not contain procedures for removing the ground wires. SWPMs are not FAA-approved, and the procedures specified in the SWPMs vary from operator to operator. There is no assurance that each operator's SWPM contains the identical actions specified in paragraph (l).

In addition, it is essential that we have feedback as to the type of removals being made. Given that possible new relevant issues might be revealed during this process, it is imperative that we have such feedback. Only by reviewing removal approvals can we be assured of this feedback and of the adequacy of the removal methods. Since the Manager of the Seattle Aircraft Certification Office (ACO) is accountable for the primary oversight of the actions regarding this AD, it is appropriate that he be this single point of approval. His involvement, therefore, is warranted in the development and approval of removing pin ground wires.

We do agree with Boeing that the actions related to removing pin ground wires in the preamble and in paragraph (l) need to be clarified. We have revised paragraph (l) accordingly. The ''FAA's Determination and Requirements of the Proposed AD'' section of the NPRM does not reappear in the AD.

As a result of this change to paragraph (l), we also have revised paragraph (m) of this AD and added a new paragraph (n) to the AD. These changes clarify that, for airplanes equipped with FR-HiTemp fuel pumps, the concurrent AFM revision requirements of paragraph (m) must be done only after removing the pin ground wires in accordance with paragraph (l).

In addition, we have determined that the compliance time of ''before further flight after installing the new IDS software required by paragraph (h) of this AD'' specified in paragraph (j) of the NPRM (paragraph (l) of the final rule) can be extended somewhat. We intended to require the removal of pin ground wires at a time that would coincide with regularly scheduled maintenance visits for the majority of the affected fleet, when the airplanes would be located at a base where special equipment and trained personnel would be readily available, if necessary. We now recognize that a compliance time of ''after installing the new IDS–504 software required by paragraph (h) of this AD and within 6 months after the effective date of this AD'' corresponds more closely to the interval representative of most of the affected operators' normal maintenance schedules. We have revised paragraph (l) accordingly. We do not consider that this extension will adversely affect safety.

Request To Refer to a Later Revision of Referenced Service Bulletin

Japan Airlines requests that the NPRM be revised to refer to Revision 2 of Boeing Alert Service Bulletin 747–31A2351 when Boeing issues it. Japan Airlines notes that the NPRM refers to Boeing Alert Service Bulletin 747–31A2351, Revision 1, dated March 17, 2005, as an appropriate source of service information for installing new IDS–504 software. Japan Airlines states that Revision 1 of the service bulletin contains a typographical error, and that Boeing is planning to revise it.

We acknowledge that there is a typographical error in Revision 1 of the service bulletin. However, the error does not compromise the actions described in the service bulletin. In addition, Boeing has informed us that the release date of

Revision 2 of the service bulletin is unknown. We do not consider that delaying this action until after the release of the manufacturer's planned service bulletin is warranted. Therefore, we have made no change to the AD in this regard.

Request To Allow Previously Approved AMOCs

British Airways (BA) requests that AMOCs 140S–03–319 (which allows installation of FR-HiTEMP fuel pumps) and 140S–04–31 (which allows installation of FR-HiTEMP fuel pumps in accordance with Boeing Service Bulletin 747–28–2258), previously approved in accordance with certain ADs, continue to be approved as AMOCs for the proposed requirements of the NPRM. BA states that the NPRM just consolidates the various existing ADs into one AD and does not address any new unsafe condition. Therefore, BA contends that the existing AMOCs still fully mitigate the NPRM.

BA states that the only new safety feature of the NPRM is the integrated display flight deck messages, which are triggered by low fuel pressure signals from existing pressure switches. BA also states that the pressure switch indication can flicker for minutes before a stable condition occurs, which could cause a flight deck indication delay before a latched message is set for the flightcrew to act on. BA adds that a fuel pump will have numerous re-prime (wet/vapor) cycles before it is shut down during low-pressure instability, possibly causing a fuel pump to run dry. BA states that there are other single failures, such as software errors, fuel pressure switches not operating properly, and flightcrew delays responding to flight deck messages, that add to the possibility of the fuel pump running dry for unknown periods of time. Finally, BA asserts that the continued safe operation of an airplane equipped with FR-HiTEMP fuel pumps does not depend on the knowledge of low-pressure messages or the accuracy of those messages.

We do not agree with BA's conclusion that the installation of FR-HiTEMP fuel pumps satisfies the requirements of this AD. We have determined that installing FR-HiTEMP fuel pumps alone does not make the pumping system compliant with the requirements of 14 CFR part 25 and does not adequately address the unsafe conditions identified from the SFAR 88 review. More work is necessary for airplanes equipped with FR-HiTEMP fuel pumps. As specified in paragraph (l) of the AD, for airplanes on which FR-HiTEMP fuel pumps have been incorporated in accordance with Boeing Service Bulletin 747–28–2258, dated December 19, 2003, or Revision 1, dated August 11, 2005, G13 pin ground wires must be removed after installing the new IDS–504 software in accordance with paragraph (h) of this AD. This will correctly configure the EIU for wet shutoff messaging.

We find that BA might misunderstand the operation of the fuel pump indications specified in this AD, and that clarification is necessary. The primary indication to the flightcrew that the fuel pumps should be shut off is the low-fuel advisory message, which is driven by the fuel quantity indication system (FQIS). The flightcrew is trained to shut off the pump when that message appears. If the flightcrew fails to shut off the pump at that time, approximately 30 seconds to 2 minutes later (depending on the pump position, fuel flow, and the airplane attitude), a caution level pump low pressure message and aural warning are triggered. This second message is driven by a pump outlet low pressure switch. We have determined that this redundant message scheme and the associated flightcrew procedures provide an acceptable level of safety by ensuring that dry operation of fuel pumps for a period long enough to create a fuel tank ignition risk will not occur.

In addition, we recognize that fuel pressure switch failures are possible. We have determined there is adequate redundancy in the FQIS and adequate procedures and flightcrew training to ensure that dry operation of fuel pumps for a period long enough to create a fuel tank ignition risk will not occur. We also recognize that there is always some potential for error in the software development process, but we have determined that the industry standard for software development and certification process, which is used by Boeing and its suppliers, provides an appropriate level of software design assurance for these display functions.

Request To Add Airplanes to Paragraph (j) of the NPRM

Japan Airlines requests that we revise the first sentence in paragraph (j) of the NPRM (redesignated as paragraph (l) in the AD) to include airplanes on which FR-HiTEMP fuel pumps were incorporated in production. Japan Airlines states that some of their airplanes had FR-HiTEMP fuel pumps installed in production, and that Boeing Service Bulletin 747–28–2258, dated December 19, 2003; or Revision 1, dated August 11, 2005; does not apply to those airplanes. The commenter contends that the G13 pin ground wires can be removed in accordance with Part 10 through Part 28 of Boeing Service Bulletin 747–28–2258, Revision 1, when EICAS messaging logic for fuel pump operation is desired due to low pressure indication (i.e., when the operator decides to do the removal).

We partially agree. We agree with Japan Airlines that the removal specified in paragraph (l) of this AD must be done on airplanes on which FR-HiTEMP fuel pumps were incorporated in production. However, we do not agree with Japan Airlines that the removal specified in paragraph (l) can be done at a time convenient to operators. We have determined that installing FR-HiTEMP fuel pumps alone does not make the pumping system compliant with the requirements of 14 CFR part 25 and does not adequately address the unsafe conditions identified from the SFAR 88 review. Further, as discussed previously, we acknowledge that Boeing Service Bulletin 747–28–2258, Revision 1, contains procedures for identification and location of the ground wire to be removed; however, it does not contain procedures for removing the ground wires. Therefore, we have revised paragraph (l) to include airplanes on which FR-HiTEMP fuel pumps have been incorporated in production.

Requests To Revise Certification Limitations

Boeing requests that the following Certification Limitations of paragraph (k) of the NPRM (redesignated as paragraph (m) in the AD) be deleted:

1. ''The CWT must contain a minimum of 17,000 pounds (7,700 kilograms) prior to engine start, if the CWT override/jettison pumps are to be selected ON during takeoff.'' Boeing states that installing the new IDS software in accordance with the NPRM provides the appropriate messaging for this operation. Boeing also states that this operation (i.e., managing the fuel quantity of each tank to ensure that the fuel pumps are not running dry) is now part of the basic flightcrew training. In addition, Boeing states that the IDS logic provides for a higher wet shut-off level (7,000 pounds) if that fuel quantity is reached and climb attitude is detected (greater than 5 degrees).

We agree. We have determined that incorporating the new IDS software provides messaging to the flightcrew indicating that the fuel pumps must be OFF at takeoff if the fuel quantity is less than 17,000 pounds and if the fuel pumps are selected ON. Therefore, the limitation ''The CWT must contain a minimum of 17,000 pounds (7,700 kilograms) prior to engine start, if the CWT override/jettison pumps are to be

selected ON during takeoff'' specified in paragraph (k) of the NPRM is no longer necessary. We have revised paragraph (m) of this AD accordingly.

2. *''Center Wing Tank (CWT):* The CWT fuel quantity indication system must be operative to dispatch with CWT mission fuel,'' and ''The HST fuel quantity indication system must be operative to dispatch with HST mission fuel.'' Boeing states that the Master Minimum Equipment List (MMEL) addresses operations with inoperative equipment, and that it was revised in 2003 to address this issue.

We do not agree. The results of the system safety analysis performed during the SFAR 88 review to show compliance with 14 CFR part 25 requirements concluded that the indications driven by the FQIS signals are required for safe operation. Operation with the FQIS inoperative would revert the fuel pump indications to a configuration similar to the existing configuration, which has been found non-compliant with 14 CFR part 25 requirements. The existing MMEL will be revised to delete the FQIS relief for the CWT and HST. Until that revision occurs, the requirements of this AD would apply and prevail over the MMEL. We have made no change to the AD in this regard.

Japan Airlines requests that the Certification Limitations of paragraph (k) of the NPRM (redesignated as paragraph (m) in the AD) be revised as follows:

1. Either add a statement that there is no minimum requirement for the fuel quantity in the CWT, if the CWT override/jettison fuel pumps are OFF at takeoff, or clarify paragraph (k) in this regard. Japan Airlines notes that the Certification Limitations, in part, states, ''The [CWT] must contain a minimum of 17,000 pounds prior to engine start, if the CWT override/jettison pumps are to be selected ON during takeoff.''

We partially agree. We agree with Japan Airlines's understanding of the intent of the Certification Limitations of paragraph (m) of this AD. As discussed previously, we have determined that the limitation ''The CWT must contain a minimum of 17,000 pounds (7,700 kilograms) prior to engine start, if the CWT override/jettison pumps are to be selected ON during takeoff'' specified in paragraph (k) of the NPRM is no longer necessary and have revised paragraph (m) of this AD accordingly.

2. Add the following:

• ''Note: In a low fuel situation, both CWT override/jettison pumps may be selected ON and all CWT fuel may be used''; and

• ''Note: In a low fuel situation, both HST transfer pumps may be selected ON and all HST fuel may be used.''

Japan Airlines notes that according to AMOC 140S–03–173, these notes have been established.

We agree and have revised paragraph (m) of this AD accordingly.

3. Revise a typographical error from ''FUEL LOW STAB L OR R'' to ''FUEL LO STAB L OR R.''

We agree and have revised paragraph (m) of this AD accordingly.

4. Add the following: ''Warning: Do not cycle CWT and HST pump switches from ON to OFF to ON with any continuous low pressure indication present.'' Japan Airlines states that according to AMOC 140S–03–173, this warning has been established.

We agree and have revised paragraph (m) of this AD accordingly.

5. Revise the phrase ''defueling any fuels tanks'' to ''defueling any fuel tanks or transferring between tanks.'' Japan Airlines states that according to AMOC 140S–03–173, the defueling requirements in AD 2002–24–52 apply for defueling or transferring between tanks.

We partially agree. We agree with Japan Airlines that paragraph (m) needs to be revised to address any fuel pump that might run dry during fuel transfer. However, we have revised paragraph (m) in a different manner than suggested by Japan Airlines. We added a sentence at the end of the Certification Limitations in paragraph (m) that reads, ''The above requirements apply for defueling or transferring between tanks.''

Request To Require Prior or Concurrent Requirements

NWA believes that we may be mandating a prerequisite modification for the anticipated modification of the fuel system auto shutoff. NWA requests that this be done by requiring the service bulletins identified in Table 2 of the NPRM as prior or concurrent requirements to an AD that also mandates the auto shutoff modification.

We do not agree. We have no plans at this time to mandate a modification of the auto shutoff for either the CWT or HST. We have made no change to this AD in this regard.

Request To Change Paragraph Identifiers

NWA states that the table in the ''Change to Existing AD'' section of the NPRM contains incorrect paragraph references. NWA states that the requirement of AD 2002–24–52 paragraph (a) corresponds to paragraph (f) in the NPRM, not paragraph (g). NWA also states that the requirement in AD 2002–24–52 paragraph (b) corresponds to paragraph (g) in the NPRM, not paragraph (h).

We infer that NWA is requesting that the ''Change to Existing AD'' section be corrected. We partially agree. We agree that there is an error in that section. However, that section does not reappear in this AD. Therefore, we have made no change to this AD in this regard.

Explanation of Change to Costs of Compliance

After the NPRM was issued, we reviewed the figures we have used over the past several years to calculate AD costs to operators. To account for various inflationary costs in the airline industry, we find it necessary to increase the labor rate used in these calculations from $65 per work hour to $80 per work hour. The cost impact information, below, reflects this increase in the specified hourly labor rate.

Conclusion

We have carefully reviewed the available data, including the comments that have been received, and determined that air safety and the public interest require adopting the AD with the changes described previously. We have determined that these changes will neither increase the economic burden on any operator nor increase the scope of the AD.

Costs of Compliance

There are about 520 airplanes of the affected design in the worldwide fleet. The following table provides the estimated costs for U.S. operators to comply with this AD.

ESTIMATED COSTS

Action	Work hours	Average labor rate per hour	Parts	Cost per airplane	Number of U.S.-registered airplanes	Fleet cost
AFM revision (required by AD 2002–24–52).	1	$80	None	$80	101	$8,080

ESTIMATED COSTS—Continued

Action	Work hours	Average labor rate per hour	Parts	Cost per airplane	Number of U.S.-registered airplanes	Fleet cost
Installation of new IDS software (new action).	3	80	100	340	101	34,340
Removal of G–13 pin ground wires (new action).	1	80	None	80 if an affected airplane is imported and placed on the U.S. Register in the future.	0	0
AFM revision (new action)	1	80	None	80	101	8,080

Authority for This Rulemaking

Title 49 of the United States Code specifies the FAA's authority to issue rules on aviation safety. Subtitle I, Section 106, describes the authority of the FAA Administrator. Subtitle VII, Aviation Programs, describes in more detail the scope of the Agency's authority.

We are issuing this rulemaking under the authority described in Subtitle VII, Part A, Subpart III, Section 44701, ''General requirements.'' Under that section, Congress charges the FAA with promoting safe flight of civil aircraft in air commerce by prescribing regulations for practices, methods, and procedures the Administrator finds necessary for safety in air commerce. This regulation is within the scope of that authority because it addresses an unsafe condition that is likely to exist or develop on products identified in this rulemaking action.

Regulatory Findings

We have determined that this AD will not have federalism implications under Executive Order 13132. This AD will not have a substantial direct effect on the States, on the relationship between the national government and the States, or on the distribution of power and responsibilities among the various levels of government.

For the reasons discussed above, I certify that this AD:

(1) Is not a ''significant regulatory action'' under Executive Order 12866;

(2) Is not a ''significant rule'' under DOT Regulatory Policies and Procedures (44 FR 11034, February 26, 1979); and

(3) Will not have a significant economic impact, positive or negative, on a substantial number of small entities under the criteria of the Regulatory Flexibility Act.

We prepared a regulatory evaluation of the estimated costs to comply with this AD and placed it in the AD docket. See the **ADDRESSES** section for a location to examine the regulatory evaluation.

List of Subjects in 14 CFR Part 39

Air transportation, Aircraft, Aviation safety, Incorporation by reference, Safety.

Adoption of the Amendment

■ Accordingly, under the authority delegated to me by the Administrator, the FAA amends 14 CFR part 39 as follows:

PART 39—AIRWORTHINESS DIRECTIVES

■ 1. The authority citation for part 39 continues to read as follows:

Authority: 49 U.S.C. 106(g), 40113, 44701.

§ 39.13 [Amended]

■ 2. The Federal Aviation Administration (FAA) amends § 39.13 by removing amendment 39–12993 (68 FR 14, January 2, 2003) and by adding the following new airworthiness directive (AD):

2007–13–04 Boeing: Amendment 39–15108. Docket No. FAA–2006–23803; Directorate Identifier 2005–NM–238–AD.

Effective Date

(a) This AD becomes effective July 25, 2007.

Affected ADs

(b) This AD supersedes AD 2002–24–52. In addition, after accomplishing the requirements of paragraphs (h) and (m) of this AD, the airplane flight manual (AFM) requirements specified in Table 1 of this AD may be removed.

TABLE 1.—AFFECTED ADS

AFM requirements of—	Of—
(1) Paragraph (a)	AD 2001–12–21, amendment 39–12277.
(2) Paragraph (a)	AD 2001–21–07, amendment 39–12478.
(3) Paragraph (c)	AD 2002–19–52, amendment 39–12900.
(4) Paragraphs (f) and (g)	This AD.

Applicability

(c) This AD applies to airplanes identified in Table 2 of this AD, certificated in any category.

TABLE 2.—APPLICABILITY

Boeing model—	As identified in Boeing Alert Service Bulletin—
(1) 747–400, 747–400D, and 747–400F series airplanes	747–31A2351, Revision 1, dated March 17, 2005.
(2) 747–400 and 747–400F series airplanes	747–31A2350, Revision 1, dated March 17, 2005.
(3) 747–400 and 747–400F series airplanes	747–31A2352, Revision 1, dated March 17, 2005.

Unsafe Condition

(d) This AD results from fuel system reviews conducted by the manufacturer. We are issuing this AD to reduce the potential for ignition sources inside fuel tanks, which, in combination with flammable fuel vapors, could result in fuel tank explosions and consequent loss of the airplane.

Compliance

(e) You are responsible for having the actions required by this AD performed within the compliance times specified, unless the actions have already been done.

Restatement of Requirements of AD 2002–24–52

Airplane Flight Manual (AFM) Revision

(f) Within 4 days after receipt of emergency AD 2002–24–51, instead of complying with the requirements of paragraph (d) of AD 2002–24–51, revise the Limitations section of the AFM to include the following (this may be accomplished by inserting a copy of this AD into the AFM):

"CERTIFICATE LIMITATIONS

Fueling and use of the horizontal stabilizer tank (if installed) is prohibited.

The center wing tank (CWT) must contain a minimum of 17,000 pounds (7,700 kilograms) prior to engine start, if the CWT override/jettison pumps are to be selected ON during flight.

The CWT fuel quantity indication system must be operative to dispatch with CWT mission fuel.

Both CWT override/jettison pump switches must be selected OFF at or before CWT fuel quantity reaches 7,000 pounds (3,200 kilograms), if CWT fuel quantity is less than 50,000 pounds (22,700 kilograms) prior to engine start. The CWT override pumps may be selected ON during stabilized cruise conditions. Both CWT override/jettison pump switches must be selected OFF at or before the CWT fuel quantity reaches 3,000 pounds (1,400 kilograms).

Note

With CWT override/jettison pumps selected OFF and CWT fuel quantity greater than 6,000 pounds (2,800 kilograms), the FUEL OVRD CTR L & R EICAS messages will be displayed. Do not accomplish the associated non-normal procedure.

Both CWT override/jettison pump switches must be selected OFF at or before CWT fuel quantity reaches 3,000 pounds (1,400 kilograms), if CWT fuel quantity is greater than or equal to 50,000 pounds (22,700 kilograms) prior to engine start.

Both CWT override/jettison pumps must be selected OFF when either CWT override/jettison fuel pump low pressure light illuminates.

Warning

Do not reset a tripped fuel pump circuit breaker.

Warning

Do not cycle CWT override/jettison pump switches from ON to OFF to ON with any continuous low pressure indication present.

Note

The center wing tank may be emptied normally during an emergency fuel jettison.

Note

In a low fuel situation, both CWT override/jettison pumps may be selected ON and all CWT fuel may be used.

If a center wing tank pump fails with fuel in the center tank, accomplish the FUEL OVRD CTR L, R non-normal procedure.

If the main tanks are not full, the zero fuel gross weight of the airplane plus the weight of CWT tank fuel may exceed the maximum zero fuel gross weight by up to 7,000 pounds (3,200 kilograms) for takeoff, climb, cruise, descent, and landing, provided that the effects of balance (CG) have been considered.

When defueling any fuel tanks, the Fuel Pump Low Pressure indication lights must be monitored and the fuel pumps positioned to OFF at the first indication of fuel pump low pressure. Defueling with passengers on board is prohibited.

The limitations contained in this AD supersede any conflicting basic airplane flight manual limitations."

(g) If an operator has already complied with AD 2002–24–51, it can comply with paragraph (f) of this AD by deleting the phrase "if a placard prohibiting its use is installed" from the first paragraph of the AFM revision required by paragraph (d) of AD 2002–24–51.

New Actions Required by This AD

Installation of New Integrated Display System (IDS) Software

(h) Within 6 months after the effective date of this AD, install new IDS–504 software in the integrated display units and electronic flight instrument system/engine indication and crew alerting system interface units of the flight deck, in accordance with the Accomplishment Instructions of the applicable service bulletin identified in Table 3 of this AD.

TABLE 3.—REVISION 1 OF SERVICE BULLETINS

For model—	Boeing alert service bulletin—
(1) 747–400, 747–400D, and 747–400F series airplanes	747–31A2351, Revision 1, dated March 17, 2005.
(2) 747–400 and 747–400F series airplanes	747–31A2350, Revision 1, dated March 17, 2005.
(3) 747–400 and 747–400F series airplanes	747–31A2352, Revision 1, dated March 17, 2005.

Note 1: Each service bulletin identified in Table 3 of this AD refers to Rockwell Collins Service Bulletin IDS–7000–31–49, IDS–7000–31–50, or IDS–7000–31–51; all dated June 28, 2004; as applicable; as an additional source of service information for installing the new IDS software.

(i) Installing new IDS–504 software before the effective date of this AD, in accordance with the applicable service bulletin identified in Table 4 of this AD or during production of the airplane, is acceptable for compliance with the requirements of paragraph (h) of this AD.

TABLE 4.—ORIGINAL SERVICE BULLETINS FOR INSTALLING IDS–504 SOFTWARE

For model—	Boeing alert service bulletin—
(1) 747–400, 747–400D, and 747–400F series airplanes	747–31A2351, dated September 3, 2004.
(2) 747–400 and 747–400F series airplanes	747–31A2350, dated September 3, 2004.
(3) 747–400 and 747–400F series airplanes	747–31A2352, dated September 3, 2004.

(j) For airplanes not equipped with an HST: Installing IDS–503 software before the effective date of this AD, in accordance with the applicable service bulletin identified in Table 5 of this AD, is acceptable for compliance with the requirements of paragraph (h) of this AD.

TABLE 5.—ACCEPTABLE SERVICE BULLETINS FOR INSTALLATION OF IDS–503 SOFTWARE

For model—	Boeing alert service bulletin—
(1) 747–400, –400D, and –400F series airplanes	747–31A2340, Revision 1, dated November 20, 2003.
(2) 747–400 and –400F series airplanes	747–31A2341, Revision 1, dated November 20, 2003.
(3) 747–400 and –400F series airplanes	747–31A2342, Revision 1, dated November 20, 2003.

Note 2: Each service bulletin identified in Table 5 of this AD refers to Rockwell Collins Service Bulletin IDS–7000–31–46, IDS–7000–31–47, or IDS–7000–31–48; all dated April 22, 2003; as applicable; as an additional source of service information for installing the IDS–503 software.

(k) Installing IDS–505 or IDS–506 software during production of the airplane is acceptable for compliance with the requirements of paragraph (h) of this AD. Also, installing IDS–506 software as a retrofit in accordance with the applicable service bulletin identified in Table 6 of this AD, is acceptable for compliance with the requirements of paragraph (h) of this AD.

TABLE 6.—ACCEPTABLE SERVICE BULLETINS FOR INSTALLATION OF IDS–506 SOFTWARE

For model—	Boeing service bulletin—
(1) 747–400, –400D, and –400F series airplanes	747–31–2376, dated September 5, 2006.
(2) 747–400 and –400F series airplanes	747–31–2377, dated September 5, 2006.
(3) 747–400 and –400F series airplanes	747–31–2378, dated September 5, 2006.

Note 3: Each service bulletin identified in Table 6 of this AD refers to Rockwell Collins Service Bulletin IDS–7000–31–52, IDS–7000–31–53, or IDS–7000–31–54; all dated August 30, 2006; as applicable; as an additional source of service information for installing the IDS–506 software.

Removal of Pin Ground Wires

(l) For airplanes on which FR–HiTEMP fuel pumps have been installed in accordance with Boeing Service Bulletin 747–28–2258, dated December 19, 2003, or Revision 1, dated August 11, 2005; or in production: After installing the new IDS–504 software required by paragraph (h) of this AD and within 6 months after the effective date of this AD, remove the ground wire of the wire integration unit that corresponds to the connector and pin locations in Table 7 of this AD, in accordance with a method approved by the Manager, Seattle Aircraft Certification Office (ACO), FAA. Chapter 20–41–03 of the Boeing 747–400 Aircraft Maintenance Manual is one approved method.

TABLE 7.—CONNECTOR LOCATION

Connector	Pin
L–EIU DM7353CA	G13
C–EIU DM7352CA	G13
R–EIU DM7351CA	G13

AFM Revision

(m) Except as specified in paragraph (n) of this AD, concurrently with the requirements of paragraph (h) of this AD, revise the Limitations section of the AFM to include the following (this may be done by inserting a copy of this AD into the AFM):

"Certification Limitations

Center Wing Tank (CWT):

The CWT fuel quantity indication system must be operative to dispatch with CWT mission fuel.

If the FUEL LO CTR L or R message is displayed both CWT override/jettison pumps must be selected OFF.

If the FUEL PRESS CTR L or R message is displayed, the corresponding CWT override/jettison pump must be selected OFF.

Note: In a low fuel situation, both CWT override/jettison pumps may be selected ON and all CWT fuel may be used.

Horizontal Stabilizer Tank (HST):

The following additional limitations must be followed if the HST is fueled and used:

The HST fuel quantity indication system must be operative to dispatch with HST mission fuel.

If the FUEL PMP STB L or R message is displayed while on the ground both HST pumps must be selected OFF.

If the FUEL LO STAB L or R message is displayed in flight the corresponding HST pump must be selected OFF.

If the FUEL PRESS STAB L or R message is displayed the corresponding HST pump must be selected OFF.

The remaining fuel in the HST must be considered unusable, and the effects of that unusable fuel on balance (CG) must be considered.

Note: In a low fuel situation, both HST transfer pumps may be selected ON and all HST fuel may be used.

Warning

Do not cycle CWT and HST pump switches from ON to OFF to ON with any continuous low pressure indication present.

Do not reset a tripped fuel pump circuit breaker.

Defueling:

Prior to defueling any fuel tanks, perform a lamp test of the respective Fuel Pump Low Pressure indication lights. When defueling, the Fuel Pump Low Pressure indication lights must be monitored and the fuel pumps positioned to OFF at the first indication of fuel pump low pressure. When defueling with passengers on board, fuel pump switches must be selected OFF at or above approximately 7,000 pounds (3,200 kilograms) for the CWT, 3,000 pounds (1,400 kilograms) for main tanks, and 2,100 pounds (1,000 kilograms) for the HST.

The above requirements apply for defueling or transferring between tanks."

(n) For airplanes on which FR–HiTEMP fuel pumps have been installed in accordance with Boeing Service Bulletin 747–28–2258, dated December 19, 2003, or Revision 1, dated August 11, 2005; or in production: Concurrently with the requirements of paragraph (l) of this AD, revise the Limitations section of the AFM in accordance with paragraph (m) of this AD.

Alternative Methods of Compliance (AMOCs)

(o)(1) The Manager, Seattle ACO, FAA, has the authority to approve AMOCs for this AD, if requested in accordance with the procedures found in 14 CFR 39.19.

(2) To request a different method of compliance or a different compliance time for this AD, follow the procedures in 14 CFR 39.19. Before using any approved AMOC on any airplane to which the AMOC applies, notify your appropriate principal inspector (PI) in the FAA Flight Standards District Office (FSDO), or lacking a PI, your local FSDO.

Material Incorporated by Reference

(p) You must use the applicable service bulletins specified in Table 8 of this AD to perform the actions that are required by this AD, unless the AD specifies otherwise. The Director of the Federal Register approved the incorporation by reference of these documents in accordance with 5 U.S.C. 552(a) and 1 CFR part 51. Contact Boeing Commercial Airplanes, P.O. Box 3707, Seattle, Washington 98124–2207, for a copy of this service information. You may review copies at the FAA, Transport Airplane Directorate, 1601 Lind Avenue, SW., Renton, Washington; or at the National Archives and Records Administration (NARA). For information on the availability of this material at NARA, call 202–741–6030, or go

to: *http://www.archives.gov/federal-register/cfr/ibr-locations.html.*

TABLE 8.—MATERIAL INCORPORATED BY REFERENCE

Service bulletin	Revision level	Date
(1) Boeing Alert Service Bulletin 747–31A2350	1	March 17, 2005.
(2) Boeing Alert Service Bulletin 747–31A2351	1	March 17, 2005.
(3) Boeing Alert Service Bulletin 747–31A2352	1	March 17, 2005.

Issued in Renton, Washington, on June 8, 2007.

Stephen P. Boyd,

Acting Manager, Transport Airplane Directorate, Aircraft Certification Service.

[FR Doc. E7–11684 Filed 6–19–07; 8:45 am]

BILLING CODE 4910–13–P

DEPARTMENT OF TRANSPORTATION

Federal Aviation Administration

14 CFR Part 39

[Docket No. FAA–2007–28373; Directorate Identifier 2007–NM–110–AD; Amendment 39–15104; AD 2007–12–25]

RIN 2120–AA64

Airworthiness Directives; Gulfstream Model GIV–X, GV, and GV–SP Series Airplanes

AGENCY: Federal Aviation Administration (FAA), Department of Transportation (DOT).

ACTION: Final rule; request for comments.

SUMMARY: The FAA is adopting a new airworthiness directive (AD) for certain Gulfstream Model GIV–X, GV, and GV–SP series airplanes. This AD requires revising the airplane flight manuals (AFMs) of those airplanes, and doing repetitive functional checks of the forward water drain/supply valves and applicable corrective actions. This AD also provides for optional terminating action for the repetitive functional checks. This AD results from reports of failed forward water drain/supply valves on numerous airplanes, and reports of ice striking the wing-to-body fairings and engine nose cowls of several airplanes. We are issuing this AD to prevent leakage from failed water drain/supply valves allowing the build-up of ice on the airplane, which could separate and strike the airplane structure aft of the failed valves; become ingested by a propulsion engine; or become a hazard to persons or property on the ground.

DATES: This AD becomes effective July 5, 2007.

The Director of the Federal Register approved the incorporation by reference of certain publications listed in the AD as of July 5, 2007.

We must receive comments on this AD by August 20, 2007.

ADDRESSES: Use one of the following addresses to submit comments on this AD.

- DOT Docket Web site: Go to *http://dms.dot.gov* and follow the instructions for sending your comments electronically.
- Government-wide rulemaking Web site: Go to *http://www.regulations.gov* and follow the instructions for sending your comments electronically.
- Mail: Docket Management Facility; U.S. Department of Transportation, 400 Seventh Street, SW., Nassif Building, Room PL–401, Washington, DC 20590.
- Fax: (202) 493–2251.
- Hand Delivery: Room PL–401 on the plaza level of the Nassif Building, 400 Seventh Street, SW., Washington, DC, between 9 a.m. and 5 p.m., Monday through Friday, except Federal holidays.

Contact Gulfstream Aerospace Corporation, Technical Publications Dept., P.O. Box 2206, Savannah, Georgia 31402–2206, for service information identified in this AD.

FOR FURTHER INFORMATION CONTACT: Gerald Avella, Aerospace Engineer, Systems and Equipment Branch, ACE–119A, FAA, Atlanta Aircraft Certification Office, One Crown Center, 1895 Phoenix Boulevard, Suite 450, Atlanta, Georgia 30349; telephone (770) 703–6066; fax (770) 703–6097.

SUPPLEMENTARY INFORMATION:

Discussion

We have received a report of 18 instances of failed forward water drain/supply valves on Gulfstream Model GIV–X, GV, and GV–SP series airplanes. Investigation by the airplane manufacturer revealed that the water drain/supply valves can be damaged by attempted operation when they are frozen. We also received a report of seven instances of ice striking the wing-to-body fairings and engine nose cowls of several airplanes. Leakage from failed water drain/supply valves can allow the build-up of ice on the airplane, which could separate and strike the airplane structure aft of the failed valves; become ingested by a propulsion engine; or become a hazard to persons or property on the ground.

Relevant Service Information

We have reviewed the Gulfstream airplane flight manual (AFM) supplements and alert customer bulletins, including the Joint Aviation Authority (JAA) Gulfstream AFM revisions. We have identified these documents in the following tables.

The Gulfstream AFM supplements describe procedures for revising the Normal Procedures section of the AFMs of the affected airplanes to specify a functional check of forward water drain/supply valves, and corrective actions if necessary. Corrective actions include purging, deactivating, and securing the galley and lavatory sinks, or the entire water system, as applicable, and placarding those systems ''Inoperative'' or ''Do Not Use.'' The AFM supplements are identified as follows:

GULFSTREAM AFM SUPPLEMENTS

Airplane model	AFM supplement	Date
GIV–X	G350–2007–01	April 12, 2007.
	G450–2007–02	April 12, 2007.
GV	GV–2007–04	April 12, 2007.
GV–SP	G500–2007–03	April 12, 2007.

GULFSTREAM AFM SUPPLEMENTS—Continued

Airplane model	AFM supplement	Date
	G550–2007–05	April 12, 2007.

The alert customer bulletins identified in the following table describe procedures for doing repetitive functional checks of the forward water drain/supply valves for leakage; inspecting to determine whether the water supply valve has part number (P/N) 4E4151–1 or the water drain valve has P/N 4E4151–3; and replacing any water supply valve having P/N 4E4151–1 with a new, improved valve having P/N 4E4491–1, or any water drain valve having P/N 4E4151–3 with a new, improved valve having P/N 4E4493–1. The alert customer bulletins also specify reporting compliance to the manufacturer.

GULFSTREAM ALERT CUSTOMER BULLETINS

Airplane model	Alert Customer Bulletin	Date
GIV–X	G350 Number 5	April 11, 2007.
	G450 Number 5	April 11, 2007.
GV	GV Number 26	April 11, 2007.
GV–SP	G500 Number 7	April 11, 2007.
	G550 Number 7	April 11, 2007.

The information contained in the JAA AFM revisions identified in the following table is considered acceptable by the European Aviation Safety Agency (EASA) for airplanes operated under and in accordance with the JAA and EASA regulations, supervision, and oversight:

JAA GULFSTREAM AFM REVISIONS

Airplane model	JAA AFM revisions	Date
GIV–X	JAA–G350–2007–01	May 21, 2007.
	JAA–G450–2007–01	May 21, 2007.
GV	JAA–GV–2007–02	May 21, 2007.
GV–SP	JAA–G500–2007–03	May 21, 2007.
	JAA–G550–2007–03	May 21, 2007.

FAA's Determination and Requirements of This AD

The unsafe condition described previously is likely to exist or develop on other airplanes of the same type design. For this reason, we are issuing this AD to prevent leakage from failed water drain/supply valves allowing the build-up of ice on the airplane, which could separate and strike the airplane structure aft of the failed valves; become ingested by a propulsion engine; or become a hazard to persons or property on the ground. This AD requires accomplishing the actions specified in the service information described previously, except as discussed under ''Differences Between the AD and Service Information.''

Differences Between the AD and Service Information

The alert customer bulletins do not describe procedures to be followed if the part number of a water drain/supply valve is missing or cannot be determined. However, this AD requires replacing any such valve with a new, improved valve having P/N 4E4491–1 or P/N 4E4493–1, as applicable.

Although the Accomplishment Instructions of the referenced alert customer bulletins describe procedures for submitting reports of compliance with the service bulletin, this AD does not require those actions.

Interim Action

We consider this AD interim action. We are currently considering requiring the optional terminating action (replacing the water drain/supply valves) provided in this AD, which will terminate the required repetitive functional checks. However, the planned compliance time for the terminating action would allow enough time to provide notice and opportunity for prior public comment on the merits of the valve replacement.

Clarification of Terminology

This AD provides procedures for repetitive functional checks for proper operation of the forward water drain/supply valves, and corrective actions if necessary. We have determined that these functional checks and corrective actions may be properly performed by the cockpit flightcrew because the checks and actions do not require tools, precision measuring equipment, training, or pilot logbook endorsements, or the use of or reference to technical data.

FAA's Determination of the Effective Date

Since an unsafe condition exists that requires the immediate adoption of this AD, we have found that notice and opportunity for public comment before issuing this AD are impracticable, and that good cause exists to make this AD effective in less than 30 days.

Comments Invited

This AD is a final rule that involves requirements that affect flight safety and was not preceded by notice and an opportunity for public comment; however, we invite you to submit any relevant written data, views, or arguments regarding this AD. Send your comments to an address listed in the **ADDRESSES** section. Include ''Docket No. FAA–2007–28373; Directorate Identifier 2007–NM–110–AD'' at the beginning of

your comments. We specifically invite comments on the overall regulatory, economic, environmental, and energy aspects of the AD that might suggest a need to modify it.

We will post all comments we receive, without change, to *http://dms.dot.gov,* including any personal information you provide. We will also post a report summarizing each substantive verbal contact with FAA personnel concerning this AD. Using the search function of that Web site, anyone can find and read the comments in any of our dockets, including the name of the individual who sent the comment (or signed the comment on behalf of an association, business, labor union, etc.). You may review the DOT's complete Privacy Act Statement in the **Federal Register** published on April 11, 2000 (65 FR 19477–78), or you may visit *http://dms.dot.gov.*

Examining the Docket

You may examine the AD docket on the Internet at *http://dms.dot.gov,* or in person at the Docket Management Facility office between 9 a.m. and 5 p.m., Monday through Friday, except Federal holidays. The Docket Management Facility office (telephone (800) 647–5227) is located on the plaza level of the Nassif Building at the DOT street address stated in the **ADDRESSES** section. Comments will be available in the AD docket shortly after the Docket Management System receives them.

Authority for This Rulemaking

Title 49 of the United States Code specifies the FAA's authority to issue rules on aviation safety. Subtitle I, Section 106, describes the authority of the FAA Administrator. Subtitle VII, Aviation Programs, describes in more detail the scope of the Agency's authority.

We are issuing this rulemaking under the authority described in Subtitle VII, Part A, Subpart III, Section 44701, ''General requirements.'' Under that section, Congress charges the FAA with promoting safe flight of civil aircraft in air commerce by prescribing regulations for practices, methods, and procedures the Administrator finds necessary for safety in air commerce. This regulation is within the scope of that authority because it addresses an unsafe condition that is likely to exist or develop on products identified in this rulemaking action.

Regulatory Findings

We have determined that this AD will not have federalism implications under Executive Order 13132. This AD will not have a substantial direct effect on the States, on the relationship between the national government and the States, or on the distribution of power and responsibilities among the various levels of government.

For the reasons discussed above, I certify that the regulation:

1. Is not a ''significant regulatory action'' under Executive Order 12866;

2. Is not a ''significant rule'' under the DOT Regulatory Policies and Procedures (44 FR 11034, February 26, 1979); and

3. Will not have a significant economic impact, positive or negative, on a substantial number of small entities under the criteria of the Regulatory Flexibility Act.

We prepared a regulatory evaluation of the estimated costs to comply with this AD and placed it in the AD docket. See the **ADDRESSES** section for a location to examine the regulatory evaluation.

List of Subjects in 14 CFR Part 39

Air transportation, Aircraft, Aviation safety, Incorporation by reference, Safety.

Adoption of the Amendment

■ Accordingly, under the authority delegated to me by the Administrator, the FAA amends 14 CFR part 39 as follows:

PART 39—AIRWORTHINESS DIRECTIVES

■ 1. The authority citation for part 39 continues to read as follows:

Authority: 49 U.S.C. 106(g), 40113, 44701.

§ 39.13 [Amended]

■ 2. The Federal Aviation Administration (FAA) amends § 39.13 by adding the following new airworthiness directive (AD):

2007–12–25 Gulfstream Aerospace Corporation: Amendment 39–15104. Docket No. FAA–2007–28373; Directorate Identifier 2007–NM–110–AD.

Effective Date

(a) This AD becomes effective July 5, 2007.

Affected ADs

(b) None.

Applicability

(c) This AD applies to Gulfstream Model GIV-X, GV, and GV-SP series airplanes, certificated in any category; as identified in the alert customer bulletins specified in Table 1 of this AD.

TABLE 1.—GULFSTREAM ALERT CUSTOMER BULLETINS

Airplane model	Alert Customer Bulletin	Date
GIV–X	G350 Number 5	April 11, 2007.
	G450 Number 5	April 11, 2007.
GV	GV Number 26	April 11, 2007.
GV–SP	G500 Number 7	April 11, 2007.
	G550 Number 7	April 11, 2007.

Unsafe Condition

(d) This AD results from reports of failed forward water drain/supply valves on numerous airplanes, and reports of ice striking the wing-to-body fairings and engine nose cowls of several airplanes. We are issuing this AD to prevent leakage from failed water drain/supply valves allowing the build-up of ice on the airplane, which could separate and strike the airplane structure aft of the failed valves; become ingested by a propulsion engine; or become a hazard to persons or property on the ground.

Compliance

(e) You are responsible for having the actions required by this AD performed within the compliance times specified, unless the actions have already been done.

Airplane Flight Manual (AFM) Revision and Valve Functional Check

(f) Within 20 flight hours after the effective date of this AD: Revise the Normal Procedures section of the AFMs to include the information in the applicable AFM supplement identified in Table 2 of this AD. This may be done by inserting a copy of the supplement into the AFM.

TABLE 2.—AFM SUPPLEMENTS

Airplane model	AFM supplement	Date
GIV–X	G350–2007–01	April 12, 2007.
	G450–2007–02	April 12, 2007.
GV	GV–2007–04	April 12, 2007.
GV–SP	G500–2007–03	April 12, 2007.
	G550–2007–05	April 12, 2007.

Note 1: For airplanes that are operated under and in accordance with the Joint Aviation Authority (JAA)/European Aviation Safety Agency (EASA) regulations, supervision, and oversight: EASA has advised us that revising the Normal Procedures section of the AFMs to include the information in the JAA Gulfstream AFM revisions specified in Table 3 of this AD, as applicable, is acceptable for compliance with the requirements of paragraph (f) of this AD.

TABLE 3.—JAA GULFSTREAM AFM REVISIONS

Airplane model	JAA AFM revisions	Date
GIV–X	JAA–G350–2007–01	May 21, 2007.
	JAA–G450–2007–01	May 21, 2007.
GV	JAA–GV–2007–02	May 21, 2007.
GV–SP	JAA–G500–2007–03	May 21, 2007.
	JAA–G550–2007–03	May 21, 2007.

(g) Before further flight following accomplishment of the AFM revision required by paragraph (f) of this AD: Perform a functional check of the forward water system water drain/supply valves and do applicable corrective actions, in accordance with the applicable AFM supplement identified in Table 2 of this AD. Do the functional check at the times specified in paragraphs (g)(1) and (g)(2) of this AD. Either the cockpit flightcrew or certificated maintenance personnel may perform these functional checks. If the water system has been deactivated as part of the corrective actions, the functional checks need not be performed again until the water system is reactivated. Doing the optional terminating action specified by paragraph (g) of this AD ends the requirement for the repetitive functional checks.

(1) Before the first flight of the day.

(2) Before further flight when the airplane is exposed to freezing conditions on the ground after the airplane has been powered down.

Optional Terminating Action

(h) Doing the actions described in paragraphs (h)(1) and (h)(2), as applicable, of this AD terminates the functional checks required by paragraph (g) of this AD. After the actions specified in paragraphs (h)(1) and (h)(2), as applicable, of this AD have been done, the applicable AFM supplement specified in paragraph (f) of this AD may be removed from the AFM.

(1) Inspect to determine the part numbers of the forward water drain/supply valves, in accordance with Part II of the Accomplishment Instructions of the applicable alert customer bulletin identified in Table 1 of this AD. A review of airplane maintenance records is acceptable in lieu of this inspection if the part numbers of the drain/supply valves can be conclusively determined from that review.

(2) Replace any water supply valve having part number (P/N) 4E4151–1 with a new, improved water supply valve having P/N 4E4491–1, and any water drain valve having P/N 4E4151–3 with a new, improved water drain valve having P/N 4E4493–1; in accordance with Part III of the Accomplishment Instructions of the applicable alert customer bulletin identified in Table 1 of this AD. If the P/N of any water drain/supply valve is missing or cannot be determined, replace the water drain/supply valve with a new, improved water drain/supply valve, as applicable.

Note 2: Help is available from Gulfstream for determining a missing or otherwise indeterminate part number of any water drain/supply valve.

Parts Installation

(i) As of the effective date of this AD, no person may install a water supply valve having P/N 4E4151–1, or a water drain valve having P/N 4E4151–3, on any airplane.

No Reporting Required

(j) Although the alert customer bulletins referred to in this AD specify to submit certain information to the manufacturer, this AD does not include that requirement.

Alternative Methods of Compliance (AMOCs)

(k)(1) The Manager, Atlanta Aircraft Certification Office (ACO), FAA, has the authority to approve AMOCs for this AD, if requested in accordance with the procedures found in 14 CFR 39.19.

(2) To request a different method of compliance or a different compliance time for this AD, follow the procedures in 14 CFR 39.19. Before using any approved AMOC on any airplane to which the AMOC applies, notify your appropriate principal inspector (PI) in the FAA Flight Standards District Office (FSDO), or lacking a PI, your local FSDO.

Material Incorporated by Reference

(l) You must use the service information identified in Table 4 and Table 5 of this AD to perform the actions that are required by this AD, unless the AD specifies otherwise. The Director of the Federal Register approved the incorporation by reference of these documents in accordance with 5 U.S.C. 552(a) and 1 CFR part 51. Contact Gulfstream Aerospace Corporation, Technical Publications Dept., P.O. Box 2206, Savannah, Georgia 31402–2206, for a copy of this service information. You may review copies at the FAA, Transport Airplane Directorate, 1601 Lind Avenue, SW., Renton, Washington; or at the National Archives and Records Administration (NARA). For information on the availability of this material at NARA, call 202–741–6030, or go to: *http://www.archives.gov/federal-register/cfr/ibr-locations.html.*

TABLE 4.—GULFSTREAM ALERT CUSTOMER BULLETINS

Bulletin No.	Date
G350 Number 5	April 11, 2007.
G450 Number 5	April 11, 2007.
GV Number 26	April 11, 2007.
G500 Number 7	April 11, 2007.
G550 Number 7	April 11, 2007.

TABLE 5.—GULFSTREAM AIRPLANE FLIGHT MANUAL SUPPLEMENTS

Supplement No.	Date
G350–2007–01	April 12, 2007.
G450–2007–02	April 12, 2007.
GV–2007–04	April 12, 2007.
G500–2007–03	April 12, 2007.
G550–2007–05	April 12, 2007.

Issued in Renton, Washington, on June 8, 2007.

Stephen P. Boyd,

Acting Manager, Transport Airplane Directorate, Aircraft Certification Service.

[FR Doc. E7–11587 Filed 6–19–07; 8:45 am]

BILLING CODE 4910–13–P

DEPARTMENT OF TRANSPORTATION

Federal Aviation Administration

14 CFR Part 39

[Docket No. FAA–2007–27756; Directorate Identifier 2006–NM–255–AD; Amendment 39–15106; AD 2007–13–02]

RIN 2120–AA64

Airworthiness Directives; McDonnell Douglas Model DC–8–62, DC–8–62F, DC–8–63, DC–8–63F, DC–8–72, DC–8–72F, and DC–8–73F Airplanes

AGENCY: Federal Aviation Administration (FAA), Department of Transportation (DOT).

ACTION: Final rule.

SUMMARY: The FAA is adopting a new airworthiness directive (AD) for all McDonnell Douglas Model DC–8–62, DC–8–62F, DC–8–63, DC–8–63F, DC–8–72, DC–8–72F, and DC–8–73F airplanes. This AD requires deactivating certain components (the sump heater, scavenge valve, and scavenge pump) of the center wing fuel tank. This AD results from fuel system reviews conducted by the manufacturer. We are issuing this AD to prevent certain conditions related to these components, which could lead to a possible ignition source in the fuel tank and a potential fire or explosion.

DATES: This AD becomes effective July 25, 2007.

The Director of the Federal Register approved the incorporation by reference of a certain publication listed in the AD as of July 25, 2007.

ADDRESSES: You may examine the AD docket on the Internet at *http://dms.dot.gov* or in person at the Docket Management Facility, U.S. Department of Transportation, 400 Seventh Street, SW., Nassif Building, Room PL–401, Washington, DC.

Contact Boeing Commercial Airplanes, Long Beach Division, 3855 Lakewood Boulevard, Long Beach, California 90846, Attention: Data and Service Management, Dept. C1–L5A (D800–0024), for service information identified in this AD.

FOR FURTHER INFORMATION CONTACT: Serj Harutunian, Aerospace Engineer, Propulsion Branch, ANM–140L, FAA, Los Angeles Aircraft Certification Office, 3960 Paramount Boulevard, Lakewood, California 90712–4137; telephone (562) 627–5254; fax (562) 627–5210.

SUPPLEMENTARY INFORMATION:

Examining the Docket

You may examine the airworthiness directive (AD) docket on the Internet at *http://dms.dot.gov* or in person at the Docket Management Facility office between 9 a.m. and 5 p.m., Monday through Friday, except Federal holidays. The Docket Management Facility office (telephone (800) 647–5227) is located on the plaza level of the Nassif Building at the street address stated in the **ADDRESSES** section.

Discussion

The FAA issued a notice of proposed rulemaking (NPRM) to amend 14 CFR part 39 to include an AD that would apply to all McDonnell Douglas Model DC–8–62, DC–8–62F, DC–8–63, DC–8–63F, DC–8–72, DC–8–72F, and DC–8–73F airplanes. That NPRM was published in the **Federal Register** on April 4, 2007 (72 FR 16287). That NPRM proposed to require deactivating certain components (the sump heater, scavenge valve, and scavenge pump) of the center wing fuel tank.

Comments

We provided the public the opportunity to participate in the development of this AD. We received no comments on the NPRM or on the determination of the cost to the public.

Clarification of Alternative Method of Compliance (AMOC) Paragraph

We have revised this action to clarify the appropriate procedure for notifying the principal inspector before using any approved AMOC on any airplane to which the AMOC applies.

Conclusion

We have carefully reviewed the available data and determined that air safety and the public interest require adopting the AD with the change described previously. We have determined that this change will neither increase the economic burden on any operator nor increase the scope of the AD.

Costs of Compliance

There are about 119 airplanes of the affected design in the worldwide fleet. The following table provides the estimated costs for U.S. operators to comply with this AD.

ESTIMATED COSTS

Work hours	Average labor rate per hour	Cost per airplane	Number of U.S.-registered airplanes	Fleet cost
6	$80	$480	84	$40,320

Authority for This Rulemaking

Title 49 of the United States Code specifies the FAA's authority to issue rules on aviation safety. Subtitle I, Section 106, describes the authority of the FAA Administrator. Subtitle VII, Aviation Programs, describes in more detail the scope of the Agency's authority.

We are issuing this rulemaking under the authority described in Subtitle VII, Part A, Subpart III, Section 44701, ''General requirements.'' Under that section, Congress charges the FAA with promoting safe flight of civil aircraft in air commerce by prescribing regulations for practices, methods, and procedures the Administrator finds necessary for safety in air commerce. This regulation is within the scope of that authority because it addresses an unsafe condition that is likely to exist or develop on products identified in this rulemaking action.

Regulatory Findings

We have determined that this AD will not have federalism implications under Executive Order 13132. This AD will not have a substantial direct effect on the States, on the relationship between the national government and the States, or on the distribution of power and responsibilities among the various levels of government.

For the reasons discussed above, I certify that this AD:

(1) Is not a ''significant regulatory action'' under Executive Order 12866;

(2) Is not a ''significant rule'' under DOT Regulatory Policies and Procedures (44 FR 11034, February 26, 1979); and

(3) Will not have a significant economic impact, positive or negative, on a substantial number of small entities under the criteria of the Regulatory Flexibility Act.

We prepared a regulatory evaluation of the estimated costs to comply with this AD and placed it in the AD docket. See the **ADDRESSES** section for a location to examine the regulatory evaluation.

List of Subjects in 14 CFR Part 39

Air transportation, Aircraft, Aviation safety, Incorporation by reference, Safety.

Adoption of the Amendment

■ Accordingly, under the authority delegated to me by the Administrator, the FAA amends 14 CFR part 39 as follows:

PART 39—AIRWORTHINESS DIRECTIVES

■ 1. The authority citation for part 39 continues to read as follows:

Authority: 49 U.S.C. 106(g), 40113, 44701.

§ 39.13 [Amended]

■ 2. The Federal Aviation Administration (FAA) amends § 39.13 by adding the following new airworthiness directive (AD):

2007–13–02 McDonnell Douglas: Amendment 39–15106. Docket No. FAA–2007–27756; Directorate Identifier 2006–NM–255–AD.

Effective Date

(a) This AD becomes effective July 25, 2007.

Affected ADs

(b) None.

Applicability

(c) This AD applies to all McDonnell Douglas Model DC–8–62, DC–8–62F, DC–8–63, DC–8–63F, DC–8–72, DC–8–72F, and DC–8–73F airplanes, certificated in any category.

Unsafe Condition

(d) This AD results from fuel system reviews conducted by the manufacturer. We are issuing this AD to prevent certain conditions related to the sump heater, scavenge valve, and scavenge pump of the center wing fuel tank, which could lead to a possible ignition source in the fuel tank and a potential fire or explosion.

Compliance

(e) You are responsible for having the actions required by this AD performed within the compliance times specified, unless the actions have already been done.

Deactivation

(f) Within 24 months after the effective date of this AD, deactivate the sump heater, scavenge valve, and scavenge pump of the center wing fuel tank, in accordance with the Accomplishment Instructions of Boeing Alert Service Bulletin DC8–28A089, dated November 1, 2006.

Alternative Methods of Compliance (AMOCs)

(g)(1) The Manager, Los Angeles Aircraft Certification Office, FAA, has the authority to approve AMOCs for this AD, if requested in accordance with the procedures found in 14 CFR 39.19.

(2) To request a different method of compliance or a different compliance time for this AD, follow the procedures in 14 CFR 39.19. Before using any approved AMOC on any airplane to which the AMOC applies, notify your appropriate principal inspector (PI) in the FAA Flight Standards District Office (FSDO), or lacking a PI, your local FSDO.

Material Incorporated by Reference

(h) You must use Boeing Alert Service Bulletin DC8–28A089, dated November 1, 2006, to perform the actions that are required by this AD, unless the AD specifies otherwise. The Director of the Federal Register approved the incorporation by reference of this document in accordance with 5 U.S.C. 552(a) and 1 CFR part 51. Contact Boeing Commercial Airplanes, Long Beach Division, 3855 Lakewood Boulevard, Long Beach, California 90846, Attention: Data and Service Management, Dept. C1–L5A (D800–0024), for a copy of this service information. You may review copies at the FAA, Transport Airplane Directorate, 1601 Lind Avenue, SW., Renton, Washington; or at the National Archives and Records Administration (NARA). For information on the availability of this material at NARA, call 202–741–6030, or go to: *http://www.archives.gov/federal-register/cfr/ibr-locations.html.*

Issued in Renton, Washington, on June 8, 2007.

Stephen P. Boyd,

Acting Manager, Transport Airplane Directorate, Aircraft Certification Service.

[FR Doc. E7–11670 Filed 6–19–07; 8:45 am]

BILLING CODE 4910–13–P

DEPARTMENT OF TRANSPORTATION

Federal Aviation Administration

14 CFR Part 39

[Docket No. FAA–2007–27565; Directorate Identifier 2006–NM–215–AD; Amendment 39–15111; AD 2007–13–07]

RIN 2120–AA64

Airworthiness Directives; Airbus Model A330 and A340 Airplanes

AGENCY: Federal Aviation Administration (FAA), Department of Transportation (DOT).

ACTION: Final rule.

SUMMARY: The FAA is superseding an existing airworthiness directive (AD), which applies to certain Airbus Model A330–200, A330–300, A340–200, and A340–300 series airplanes; and Model A340–541 and –642 airplanes. That AD currently requires repetitively resetting the display units (DUs) for the electronic instrument system (EIS), either by switching them off and back on again or by performing a complete electrical shutdown of the airplane. This new AD requires installing new software, which would end the actions required by the existing AD. This new AD also adds additional airplanes that may be placed on the U.S. Register in the future. This AD results from an incident in which all of the DUs for the EIS went blank simultaneously during flight. We are issuing this AD to prevent automatic reset of the DUs for the EIS during flight and consequent loss of data from the DUs, which could reduce the ability of the flightcrew to control the airplane during adverse flight conditions.

DATES: This AD becomes effective July 25, 2007.

The Director of the Federal Register approved the incorporation by reference of certain publications listed in the AD as of July 25, 2007.

On September 12, 2005 (70 FR 50166, August 26, 2005), the Director of the Federal Register approved the incorporation by reference of certain other publications listed in the AD.

ADDRESSES: You may examine the AD docket on the Internet at *http://dms.dot.gov* or in person at the U.S. Department of Transportation, Docket Operations, M–30, West Building Ground Floor, Room W12–140, 1200 New Jersey Avenue, SE., Washington, DC.

Contact Airbus, 1 Rond Point Maurice Bellonte, 31707 Blagnac Cedex, France, for service information identified in this AD.

FOR FURTHER INFORMATION CONTACT: Tim Backman, Aerospace Engineer, International Branch, ANM–116, Transport Airplane Directorate, FAA, 1601 Lind Avenue, SW., Renton, Washington 98057–3356; telephone (425) 227–2797; fax (425) 227–1149.

SUPPLEMENTARY INFORMATION:

Examining the Docket

You may examine the airworthiness directive (AD) docket on the Internet at *http://dms.dot.gov* or in person at the Docket Operations office between 9 a.m. and 5 p.m., Monday through Friday, except Federal holidays. The Docket

Operations office (telephone (800) 647–5527) is located on the ground floor of the West Building at the street address stated in the **ADDRESSES** section.

Discussion

The FAA issued a notice of proposed rulemaking (NPRM) to amend 14 CFR part 39 to include an AD that supersedes AD 2005–17–18, amendment 39–14239 (70 FR 50166, August 26, 2005). The existing AD applies to certain Airbus Model A330–200, A330–300, A340–200, and A340–300 series airplanes; and Model A340–541 and –642 airplanes. That NPRM was published in the **Federal Register** on March 15, 2007 (72 FR 12127). That NPRM proposed to continue to require repetitively resetting the display units for the electronic instrument system, either by switching them off and back on again or by performing a complete electrical shutdown of the airplane. That NPRM also proposed to require installing new software, which would end the actions required by the existing AD. That NPRM also proposed to add additional airplanes that may be placed on the U.S. Register in the future.

Comments

We provided the public the opportunity to participate in the development of this AD. No comments have been received on the NPRM or on the determination of the cost to the public.

New Service Bulletin Revision

Since we issued the NPRM, we have received Revision 03 of Airbus Service Bulletin A330–31–3056, dated November 25, 2004. Airbus issued this service bulletin to add non-U.S.-registered airplanes to the effectivity. The service bulletin describes procedures for installing Thales display system standard L4 or L5 in the electronic instrument system 2. No additional work is required for airplanes on which the required actions have been done in accordance with Airbus Service Bulletin A330–31–3056, Revision 02, dated March 24, 2003, which was referred to as the appropriate source of service information for the actions specified in the NPRM. We have changed the reference to this service bulletin in paragraph (i)(1)(ii) of the AD, added a new paragraph (j) of this AD to give credit for actions done before the effective date of this AD according to Revision 02 of the service bulletin, and redesignated subsequent paragraphs of the AD accordingly.

Clarification of Alternative Method of Compliance (AMOC) Paragraph

We have revised this action to clarify the appropriate procedure for notifying the principal inspector before using any approved AMOC on any airplane to which the AMOC applies.

Clarification of Paragraph Identifiers in Paragraph (h) of This AD

We have revised paragraph (h) of this AD to include certain paragraph identifiers in Table 2 that were unintentionally omitted from the NPRM.

Clarification of Applicability

We unintentionally included only the A340–200 of the Model A340 airplanes in the subject line on the first page of the NPRM. It should have read ''Airbus Model A330 and A340 Airplanes.'' The correct models appeared in all other sections of the NPRM. We have corrected the subject line in the heading of this final rule.

Conclusion

We have carefully reviewed the available data and determined that air safety and the public interest require adopting the AD with the changes described previously. We have determined that these changes will neither increase the economic burden on any operator nor increase the scope of the AD.

Costs of Compliance

The following table provides the estimated costs for U.S. operators to comply with this AD. The average labor rate per work hour is $80.

ESTIMATED COSTS

Action	Work hour(s)	Parts	Cost per airplane	Number of U.S.-registered airplanes	Fleet cost
Resetting the DUs (required by AD 2005–17–18).	1	None	$80, per reset	27	$2,160, per reset.
Installation of new software (new action).	3	The manufacturer states that it will supply required parts to the operators at no cost..	$240	27	$6,480.
Additional requirement (new action).	Between 1 and 5, depending on the airplane configuration.	The manufacturer states that it will supply required parts to the operators at no cost.	Between $80 and $400, depending on the airplane configuration.	27	Between $2,160 and $10,800, depending on the configuration of the fleet.

Authority for This Rulemaking

Title 49 of the United States Code specifies the FAA's authority to issue rules on aviation safety. Subtitle I, Section 106, describes the authority of the FAA Administrator. Subtitle VII, Aviation Programs, describes in more detail the scope of the Agency's authority.

We are issuing this rulemaking under the authority described in Subtitle VII, Part A, Subpart III, Section 44701, ''General requirements.'' Under that section, Congress charges the FAA with promoting safe flight of civil aircraft in air commerce by prescribing regulations for practices, methods, and procedures the Administrator finds necessary for safety in air commerce. This regulation is within the scope of that authority because it addresses an unsafe condition that is likely to exist or develop on products identified in this rulemaking action.

Regulatory Findings

We have determined that this AD will not have federalism implications under Executive Order 13132. This AD will

not have a substantial direct effect on the States, on the relationship between the national government and the States, or on the distribution of power and responsibilities among the various levels of government.

For the reasons discussed above, I certify that this AD:

(1) Is not a ''significant regulatory action'' under Executive Order 12866;

(2) Is not a ''significant rule'' under DOT Regulatory Policies and Procedures (44 FR 11034, February 26, 1979); and

(3) Will not have a significant economic impact, positive or negative, on a substantial number of small entities under the criteria of the Regulatory Flexibility Act.

We prepared a regulatory evaluation of the estimated costs to comply with this AD and placed it in the AD docket. See the **ADDRESSES** section for a location to examine the regulatory evaluation.

List of Subjects in 14 CFR Part 39

Air transportation, Aircraft, Aviation safety, Incorporation by reference, Safety.

Adoption of the Amendment

■ Accordingly, under the authority delegated to me by the Administrator, the FAA amends 14 CFR part 39 as follows:

PART 39—AIRWORTHINESS DIRECTIVES

■ 1. The authority citation for part 39 continues to read as follows:

Authority: 49 U.S.C. 106(g), 40113, 44701.

§ 39.13 [Amended]

■ 2. The Federal Aviation Administration (FAA) amends § 39.13 by removing amendment 39–14239 (70 FR 50166, August 26, 2005) and by adding the following new airworthiness directive (AD):

2007–13–07 Airbus: Amendment 39–15111. Docket No. FAA–2007–27565; Directorate Identifier 2006–NM–215AD.

Effective Date

(a) This AD becomes effective July 25, 2007.

Affected ADs

(b) This AD supersedes AD 2005–17–18.

Applicability

(c) This AD applies to Airbus Model A330 and A340 airplanes; certificated in any category; on which one of the Airbus Electronic Instrument System 2 (EIS2) software versions listed in Table 1 of this AD is installed; excluding those airplanes on which Airbus Modification 53063 has been done in production.

TABLE 1.—APPLICABILITY

EIS2 software version	Installed by this Airbus Modification in production	Or installed by one of these Airbus Service Bulletins in service
L4–1	51153	A330–31–3056, A330–31–3057, or A340–31–5001.
L5	51974	A330–31–3056, A330–31–3069, A340–31–4087, or A340–31–5012.

Unsafe Condition

(d) This AD results from an incident in which all of the display units (DUs) for the EIS went blank simultaneously during flight. We are issuing this AD to prevent automatic reset of the DUs for the EIS during flight and consequent loss of data from the DUs, which could reduce the ability of the flightcrew to control the airplane during adverse flight conditions.

Compliance

(e) You are responsible for having the actions required by this AD performed within the compliance times specified, unless the actions have already been done.

Requirements of AD 2005–17–18

Resetting the DUs for the EIS

(f) For Model A330–201, –202, –203, –223, –243, –301, –321, –322, –323, –341, –342, and –343 airplanes; and Model A340–211, –212, –213, –311, –312, –313, –541, and –642 airplanes: Within 2 days after September 12, 2005 (the effective date of AD 2005–17–18), or within 4 days after the last reset of the DUs for the EIS or complete electrical shutdown of the airplane, whichever is first: Reset the DUs for the EIS by doing the actions in either paragraph (f)(1) or (f)(2) of this AD. Thereafter, do the actions in paragraph (f)(1) or (f)(2) of this AD at intervals not to exceed 4 days.

(1) Switch off each DU for the EIS, wait 5 seconds or longer, and switch the DU back on again, in accordance with Airbus All Operator Telex (AOT) A330–31A3092 (for Model A330–201, –202, –203, –223, –243, –301, –321, –322, –323, –341, –342, and –343 airplanes), A340–31A4102 (for A340–211, –212, –213, –311, –312, and –313 airplanes), or A340–31A5023 (for Model A340–541 and –642 airplanes), all dated August 1, 2005, as applicable. This action may be performed by the flight deck crew or by certificated maintenance personnel.

(2) Perform a complete electrical shutdown of the airplane.

New Requirements of This Ad

Installation of New Software

(g) For airplanes other than those identified in paragraph (f) of this AD: Within 2 days after the effective date of this AD, or within 4 days after the last reset of the DUs for the EIS or complete electrical shutdown of the airplane, whichever is first, do the reset specified in paragraph (f) of this AD and repeat thereafter at intervals not to exceed 4 days, until the installation required by paragraph (h) of this AD has been done.

(h) For all airplanes: Within 7 months after the effective date of this AD, install EIS2 software standard L6–1 in accordance with the applicable service bulletin identified in Table 2 of this AD. Accomplishing the installation ends the actions required by paragraphs (f) and (g) of this AD.

TABLE 2.—SERVICE BULLETINS FOR INSTALLATION OF NEW SOFTWARE

Airbus Service Bulletin—	For model—
(1) A330–31–3087, dated June 26, 2006	A330–201, –202, –203, –223, –243, –301, –302, –303, –321, –322, –323, –341, –342, and –343 airplanes.
(2) A340–31–4100, dated June 26, 2006	A340–211, –212, –213, –311, –312, and –313 airplanes.
(3) A340–31–5021, dated June 26, 2006	A340–541 and –642 airplanes.

Additional Requirements

(i) Prior to accomplishing the requirements specified in paragraph (g) of this AD, do the applicable action(s) specified in Table 3 of this AD.

TABLE 3.—ADDITIONAL REQUIREMENTS

For airplanes identified in—	Install—	In accordance with Airbus Service Bulletin—
(1) Paragraph (h)(1) of this AD	(i) EIS2 software standard L5	A330–31–3069, Revision 01, dated December 27, 2004.
	(ii) Thales display system standard L4	A330–31–3056, Revision 03, dated November 25, 2004.
(2) Paragraph (h)(2) of this AD	EIS2 software standard L5	A340–31–4087, Revision 01, dated December 27, 2004.
(3) Paragraph (h)(3) of this AD	EIS2 software standard L5	A340–31–5012, Revision 01, dated December 27, 2004.

Credit for Actions Done Using Previous Service Information

(j) Actions accomplished before the effective date of this AD according to Airbus Service Bulletin A330–31–3056, Revision 02, dated March 24, 2003, are considered acceptable for compliance with the corresponding action specified in this AD.

Alternative Methods of Compliance (AMOCs)

(k)(1) The Manager, International Branch, ANM–116, Transport Airplane Directorate, FAA, has the authority to approve AMOCs for this AD, if requested in accordance with the procedures found in 14 CFR 39.19.

(2) To request a different method of compliance or a different compliance time for this AD, follow the procedures in 14 CFR 39.19. Before using any approved AMOC on any airplane to which the AMOC applies, notify your appropriate principal inspector (PI) in the FAA Flight Standards District Office (FSDO), or lacking a PI, your local FSDO.

(3) AMOCs approved previously in accordance with AD 2005–17–18 are approved as AMOCs for the corresponding provisions of paragraph (f) of this AD.

Related Information

(l) European Aviation Safety Agency airworthiness directive 2006–0196, dated July 10, 2006, also addresses the subject of this AD.

Material Incorporated by Reference

(m) You must use the documents identified in Table 4 and Table 5 of this AD, as applicable, to perform the actions that are required by this AD, unless the AD specifies otherwise.

TABLE 4.—ALL OPERATORS TELEXES INCORPORATED BY REFERENCE

Airbus all operators telex	Date
A330–31A3092	August 1, 2005.
A340–31A4102	August 1, 2005.
A340–31A5023	August 1, 2005.

TABLE 5.—SERVICE BULLETINS INCORPORATED BY REFERENCE

Airbus Service Bulletin	Revision level	Date
A330–31–3056	03	November 25, 2004.
A330–31–3069	01	December 27, 2004.
A330–31–3087	Original	June 26, 2006.
A340–31–4087	01	December 27, 2004.
A340–31–4100	Original	June 26, 2006.
A340–31–5012	01	December 27, 2004.
A340–31–5021	Original	June 26, 2006.

(1) The Director of the Federal Register approved the incorporation by reference of the documents identified in Table 6 of this AD in accordance with 5 U.S.C. 552(a) and 1 CFR part 51.

TABLE 6.—NEW MATERIAL INCORPORATED BY REFERENCE

Airbus Service Bulletin	Revision level	Date
A330–31–3056	03	November 25, 2004.
A330–31–3069	01	December 27, 2004.
A330–31–3087	Original	June 26, 2006.
A340–31–4087	01	December 27, 2004.
A340–31–4100	Original	June 26, 2006.
A340–31–5012	01	December 27, 2004.
A340–31–5021	Original	June 26, 2006.

(2) On September 12, 2005 (70 FR 50166, August 26, 2005), the Director of the Federal Register approved the incorporation by reference of the documents identified in Table 7 of this AD.

TABLE 7.—MATERIAL PREVIOUSLY INCORPORATED BY REFERENCE

Airbus all operators telex	Date
A330–31A3092	August 1, 2005.
A340–31A4102	August 1, 2005.
A340–31A5023	August 1, 2005.

(3) Contact Airbus, 1 Rond Point Maurice Bellonte, 31707 Blagnac Cedex, France, for a copy of this service information. You may review copies at the FAA, Transport Airplane Directorate, 1601 Lind Avenue, SW., Renton, Washington; or at the National Archives and Records Administration (NARA). For information on the availability of this material at NARA, call 202–741–6030, or go to: *http://www.archives.gov/federal-register/cfr/ibr-locations.html.*

Issued in Renton, Washington, on June 8, 2007.

Stephen P. Boyd,

Acting Manager, Transport Airplane Directorate, Aircraft Certification Service.

[FR Doc. E7–11672 Filed 6–19–07; 8:45 am]

BILLING CODE 4910–13–P

DEPARTMENT OF TRANSPORTATION

Federal Aviation Administration

14 CFR Part 39

[Docket No. FAA–2007–27981; Directorate Identifier 2007–NM–021–AD; Amendment 39–15107; AD 2007–13–03]

RIN 2120–AA64

Airworthiness Directives; Empresa Brasileira de Aeronautica S.A. (EMBRAER) Model EMB–145XR Airplanes

AGENCY: Federal Aviation Administration (FAA), Department of Transportation (DOT).

ACTION: Final rule.

SUMMARY: We are adopting a new airworthiness directive (AD) for the products listed above. This AD results from mandatory continuing airworthiness information (MCAI) originated by an aviation authority of another country to identify and correct an unsafe condition on an aviation product. The MCAI describes the unsafe condition as:

It has been found that the refueling line inside the ventral fuel tank on the Embraer EMB–145XR aircraft model is not protected in accordance with SFAR–88 (Special Federal Aviation Regulation 88) requirements.

The unsafe condition is potential ignition sources inside fuel tanks, which, in combination with flammable fuel vapors, could result in fuel tank explosions and consequent loss of the airplane. We are issuing this AD to require actions to correct the unsafe condition on these products.

DATES: This AD becomes effective July 25, 2007.

The Director of the Federal Register approved the incorporation by reference of a certain publication listed in this AD as of July 25, 2007.

ADDRESSES: You may examine the AD docket on the Internet at *http://dms.dot.gov* or in person at the Docket Management Facility, U.S. Department of Transportation, 400 Seventh Street, SW., Nassif Building, Room PL–401, Washington, DC.

FOR FURTHER INFORMATION CONTACT: Todd Thompson, Aerospace Engineer, International Branch, ANM–116, FAA, Transport Airplane Directorate, 1601 Lind Avenue, SW., Renton, Washington 98057–3356; telephone (425) 227–1175; fax (425) 227–1149.

SUPPLEMENTARY INFORMATION:

Streamlined Issuance of AD

The FAA is implementing a new process for streamlining the issuance of ADs related to MCAI. This streamlined process will allow us to adopt MCAI safety requirements in a more efficient manner and will reduce safety risks to the public. This process continues to follow all FAA AD issuance processes to meet legal, economic, Administrative Procedure Act, and **Federal Register** requirements. We also continue to meet our technical decision-making responsibilities to identify and correct unsafe conditions on U.S.-certificated products.

This AD references the MCAI and related service information that we considered in forming the engineering basis to correct the unsafe condition. The AD contains text copied from the MCAI and for this reason might not follow our plain language principles.

Discussion

We issued a notice of proposed rulemaking (NPRM) to amend 14 CFR part 39 to include an AD that would apply to the specified products. That NPRM was published in the **Federal Register** on April 24, 2007 (72 FR 20291). That NPRM proposed to correct an unsafe condition for the specified products. The MCAI states:

It has been found that the refueling line inside the ventral fuel tank on the Embraer EMB–145XR aircraft model is not protected in accordance with SFAR–88 (Special Federal Aviation Regulation 88) requirements.

The unsafe condition is potential ignition sources inside fuel tanks, which, in combination with flammable fuel vapors, could result in fuel tank explosions and consequent loss of the airplane. The MCAI requires installation of a bonding jumper between the pilot valve line tube and the pressure refueling system tube. You may obtain further information by examining the MCAI in the AD docket.

Comments

We gave the public the opportunity to participate in developing this AD. We received no comments on the NPRM or on the determination of the cost to the public.

Conclusion

We reviewed the available data and determined that air safety and the public interest require adopting the AD as proposed.

Differences Between This AD and the MCAI or Service Information

We have reviewed the MCAI and related service information and, in general, agree with their substance. But we might have found it necessary to use different words from those in the MCAI to ensure the AD is clear for U.S. operators and is enforceable. In making these changes, we do not intend to differ substantively from the information provided in the MCAI and related service information.

We might also have required different actions in this AD from those in the MCAI in order to follow our FAA policies. Any such differences are highlighted in a NOTE within the AD.

Costs of Compliance

Based on the service information, we estimate that this AD affects about 69 products of U.S. registry. We also estimate that it takes about 11 work-hours per product to comply with the basic requirements of this AD. The average labor rate is $80 per work-hour. Required parts cost about $56 per product. Where the service information lists required parts costs that are covered under warranty, we have assumed that there will be no charge for these costs. As we do not control warranty coverage for affected parties, some parties may incur costs higher than estimated here. Based on these figures, we estimate the cost of the AD on U.S. operators to be $64,584, or $936 per product.

Authority for This Rulemaking

Title 49 of the United States Code specifies the FAA's authority to issue rules on aviation safety. Subtitle I, section 106, describes the authority of the FAA Administrator. ''Subtitle VII: Aviation Programs,'' describes in more detail the scope of the Agency's authority.

We are issuing this rulemaking under the authority described in ''Subtitle VII, Part A, Subpart III, Section 44701: General requirements.'' Under that section, Congress charges the FAA with promoting safe flight of civil aircraft in air commerce by prescribing regulations for practices, methods, and procedures the Administrator finds necessary for safety in air commerce. This regulation is within the scope of that authority because it addresses an unsafe condition that is likely to exist or develop on products identified in this rulemaking action.

Regulatory Findings

We determined that this AD will not have federalism implications under Executive Order 13132. This AD will not have a substantial direct effect on the States, on the relationship between the national government and the States, or on the distribution of power and responsibilities among the various levels of government.

For the reasons discussed above, I certify this AD:

1. Is not a ''significant regulatory action'' under Executive Order 12866;

2. Is not a ''significant rule'' under the DOT Regulatory Policies and Procedures (44 FR 11034, February 26, 1979); and

3. Will not have a significant economic impact, positive or negative, on a substantial number of small entities under the criteria of the Regulatory Flexibility Act.

We prepared a regulatory evaluation of the estimated costs to comply with this AD and placed it in the AD docket.

Examining the AD Docket

You may examine the AD docket on the Internet at *http://dms.dot.gov*; or in person at the Docket Management Facility between 9 a.m. and 5 p.m., Monday through Friday, except Federal holidays. The AD docket contains the NPRM, the regulatory evaluation, any comments received, and other information. The street address for the Docket Office (telephone (800) 647–5227) is in the **ADDRESSES** section. Comments will be available in the AD docket shortly after receipt.

List of Subjects in 14 CFR Part 39

Air transportation, Aircraft, Aviation safety, Incorporation by reference, Safety.

Adoption of the Amendment

■ Accordingly, under the authority delegated to me by the Administrator, the FAA amends 14 CFR part 39 as follows:

PART 39—AIRWORTHINESS DIRECTIVES

■ 1. The authority citation for part 39 continues to read as follows:

Authority: 49 U.S.C. 106(g), 40113, 44701.

§ 39.13 [Amended]

■ 2. The FAA amends § 39.13 by adding the following new AD:

2007–13–03 Empresa Brasileira de Aeronautica S.A. (EMBRAER): Amendment 39–15107. Docket No. FAA–2007–27981; Directorate Identifier 2007–NM–021–AD.

Effective Date

(a) This airworthiness directive (AD) becomes effective July 25, 2007.

Affected ADs

(b) None.

Applicability

(c) This AD applies to EMBRAER Model EMB–145XR airplanes; certificated in any category; as identified in EMBRAER Service Bulletin 145–28–0026, dated May 16, 2006.

Subject

(d) Fuel.

Reason

(e) The mandatory continuing airworthiness information (MCAI) states:

It has been found that the refueling line inside the ventral fuel tank on the Embraer EMB–145XR aircraft model is not protected in accordance with SFAR–88 (Special Federal Aviation Regulation 88) requirements.

The unsafe condition is potential ignition sources inside fuel tanks, which, in combination with flammable fuel vapors, could result in fuel tank explosions and consequent loss of the airplane. The MCAI requires installation of a bonding jumper between the pilot valve line tube and the pressure refueling system tube.

Actions and Compliance

(f) At the time specified in paragraphs (f)(1) and (f)(2) of this AD, unless already done, install a bonding jumper between the pilot valve line tube and the pressure refueling system tube, after removing ventral fuel tank access panel 196FR, as described in EMBRAER Service Bulletin 145–28–0026, dated May 16, 2006.

(1) For airplanes that have accumulated less than 5,000 total flight hours as of the effective date of this AD: Prior to the accumulation of 10,000 total flight hours.

(2) For airplanes that have accumulated 5,000 or more total flight hours as of the effective date of this AD: Within 5,000 flight hours after the effective date of this AD.

FAA AD Differences

Note: This AD differs from the MCAI and/or service information as follows: No differences.

Other FAA AD Provisions

(g) The following provisions also apply to this AD:

(1) Alternative Methods of Compliance (AMOCs): The Manager, International Branch, ANM–116, FAA, has the authority to approve AMOCs for this AD, if requested using the procedures found in 14 CFR 39.19. Send information to ATTN: Todd Thompson, Aerospace Engineer; 1601 Lind Avenue, SW., Renton, Washington 98057–3356; telephone (425) 227–1175; fax (425) 227–1149. Before using any approved AMOC on any airplane to which the AMOC applies, notify your appropriate principal inspector (PI) in the FAA Flight Standards District Office (FSDO), or lacking a PI, your local FSDO.

(2) Airworthy Product: For any requirement in this AD to obtain corrective actions from a manufacturer or other source, use these actions if they are FAA-approved. Corrective actions are considered FAA-approved if they are approved by the State of Design Authority (or their delegated agent). You are required to assure the product is airworthy before it is returned to service.

(3) Reporting Requirements: For any reporting requirement in this AD, under the provisions of the Paperwork Reduction Act, the Office of Management and Budget (OMB) has approved the information collection requirements and has assigned OMB Control Number 2120–0056.

Related Information

(h) Refer to MCAI Brazilian Airworthiness Directive 2006–12–01, effective January 4, 2007; and EMBRAER Service Bulletin 145–28–0026, dated May 16, 2006; for related information.

Material Incorporated by Reference

(i) You must use EMBRAER Service Bulletin 145–28–0026, dated May 16, 2006, to do the actions required by this AD, unless the AD specifies otherwise.

(1) The Director of the Federal Register approved the incorporation by reference of this service information under 5 U.S.C. 552(a) and 1 CFR part 51.

(2) For service information identified in this AD, contact Empresa Brasileira de Aeronautica S.A. (EMBRAER), P.O. Box 343—CEP 12.225, Sao Jose dos Campos—SP, Brazil.

(3) You may review copies at the FAA, Transport Airplane Directorate, 1601 Lind Avenue, SW., Renton, Washington; or at the National Archives and Records Administration (NARA). For information on the availability of this material at NARA, call (202) 741–6030, or go to: *http://www.archives.gov/federal-register/cfr/ibr-locations.html.*

Issued in Renton, Washington, on June 8, 2007.

Stephen P. Boyd,

Acting Manager, Transport Airplane Directorate, Aircraft Certification Service.

[FR Doc. E7–11687 Filed 6–19–07; 8:45 am]

BILLING CODE 4910–13–P

DEPARTMENT OF TRANSPORTATION

Federal Aviation Administration

14 CFR Part 39

[Docket No. FAA–2006–26051; Directorate Identifier 2006–NM–154–AD; Amendment 39–15112; AD 2007–13–08]

RIN 2120–AA64

Airworthiness Directives; Airbus Model A318, A319, A320, and A321 Airplanes

AGENCY: Federal Aviation Administration (FAA), Department of Transportation (DOT).

ACTION: Final rule.

SUMMARY: We are adopting a new airworthiness directive (AD) for the

products listed above. This AD results from mandatory continuing airworthiness information (MCAI) issued by an airworthiness authority of another country to identify and correct an unsafe condition on an aviation product. The MCAI describes the unsafe condition as a fire in the auxiliary power unit air intake. We are issuing this AD to require actions to correct the unsafe condition on these products.

DATES: This AD becomes effective July 25, 2007.

The Director of the Federal Register approved the incorporation by reference of certain publications listed in this AD as of July 25, 2007.

ADDRESSES: You may examine the AD docket on the Internet at *http://dms.dot.gov* or in person at the Docket Management Facility, U.S. Department of Transportation, 400 Seventh Street, SW., Nassif Building, Room PL–401, Washington, DC.

FOR FURTHER INFORMATION CONTACT: Tim Dulin, Aerospace Engineer, International Branch, ANM–116, FAA, Transport Airplane Directorate, 1601 Lind Avenue, SW., Renton, Washington 98057–3356; telephone (425) 227–2141; fax (425) 227–1149.

SUPPLEMENTARY INFORMATION:

Discussion

The FAA is implementing a new process for streamlining the issuance of ADs related to MCAI. This streamlined process will allow us to adopt MCAI safety requirements in a more efficient manner and will reduce safety risks to the public. This process continues to allow all FAA AD issuance processes to meet legal, economic, Administrative Procedure Act, and **Federal Register** requirements. We also continue to meet our technical decision-making responsibilities to identify and correct unsafe conditions on U.S.-certificated products.

This AD references the MCAI and related service information that we considered in forming the engineering basis to correct the unsafe condition. The AD contains text copied from the MCAI and for this reason might not follow our plain language principles.

We issued a notice of proposed rulemaking (NPRM) to amend 14 CFR part 39 to include an AD that would apply to the specified products. That NPRM was published in the **Federal Register** on October 13, 2006 (71 FR 60444). That NPRM proposed to require repetitive inspections of the auxiliary power unit (APU) starter motor, APU inlet plenum, and APU air intake, as well as repetitive cleaning of the APU air intake; and applicable corrective actions. The MCAI states that an operator reported black smoke at the rear of the fuselage during taxi after landing. The smoke was caused by a fire in the APU air intake. Analysis has demonstrated that following numerous unsuccessful APU start attempts in flight, there is a risk of reverse flow, leading to flame propagation to the APU air inlet and air intake duct. If this zone is contaminated, a fire may be initiated. The flightcrew operating manual limits the number of APU start attempts as follows: After three starter motor duty cycles, wait 60 minutes before attempting three more cycles.

Comments

We gave the public the opportunity to participate in developing this AD. We considered the comments received.

Request To Include Terminating Action

Airbus states that it has two final fixes available. No change to the NPRM is requested.

We infer that Airbus wants us to change the AD applicability and add optional terminating action to the AD. Since the issuance of the NPRM, the European Aviation Safety Agency (EASA), which is the Technical Agent for the Member States of the European Community, has issued EASA Airworthiness Directive 2006–0153 R1, dated November 27, 2006, and corrected on November 29, 2006. The EASA AD applicability excludes airplanes that are equipped with Hamilton Sundstrand APIC APS 3200 APUs and that have incorporated Airbus Modification 35803 in production, or Airbus Service Bulletin A320–49–1070 in service. The EASA AD applicability also excludes airplanes that are equipped with Honeywell 131–9A APUs, and that have incorporated Airbus Modification 35936 in production or Airbus Service Bulletin A320–49–1075 in service. The EASA AD also adds an optional terminating action for the repetitive inspections and cleaning tasks for airplanes on which Airbus Service Bulletin A320–49–1070, dated July 28, 2006 (for airplanes equipped with APIC APS 3200 APUs); or Airbus Service Bulletin A320–49–1075, dated September 22, 2006, or Revision 01, dated December 1, 2006 (for airplanes equipped with Honeywell 131–9A APUs), has been embodied in service.

In light of the revised EASA AD, we agree with the commenter, and have revised the applicability and added a new paragraph (e)(5) to this AD to include the optional terminating action.

Request To Remove Airplanes Equipped With Honeywell APUs

Air Transport Association (ATA), on behalf of one of its members, requests that airplanes equipped with Honeywell APUs be removed from the applicability of the NPRM. ATA states that the subject incident occurred on a Hamilton Sundstrand APU. The ATA member states that Honeywell provided data showing that in more than 14 million APU hours, not one event similar to the Hamilton Sundstrand APU incident occurred on a Honeywell APU.

We disagree with the commenters. Through analysis of both Hamilton Sundstrand and Honeywell APUs, the EASA has determined that, following numerous unsuccessful APU start attempts during flight, there is a risk of reverse flow leading to flame propagation in the APU air inlet and air intake duct. We have made no change to the AD in this regard, except for the previously noted exclusion of the Honeywell APUs in the EASA AD.

Request To Allow Incorporation of Alternate Service Information

ATA, on behalf of one of its members, states that if airplanes equipped with Honeywell APUs are not removed from the applicability, the AD should allow incorporation of Diehl Service Bulletin 3888394–49–7899 as a terminating action for airplanes having Honeywell APUs. ATA states that the service bulletin releases new software for the electronic control box that addresses the identified unsafe condition.

We agree with the commenters. The Diehl service bulletin is referenced in Airbus Service Bulletin A320–49–1075, dated September 22, 2006; and Revision 01, dated December 1, 2006, as an additional source of service information for accomplishing the modification. We have referenced the Airbus service bulletin in a new paragraph (e)(5) of this AD, as described above.

Request To Change Compliance Time

ATA, on behalf of one of its members, asks that the 2,400- and 600-flight-hour compliance times for the repetitive tasks be changed. ATA states that these compliance times do not take into account operator experience. ATA notes that the ATA member performs starter motor inspections during a 1,200-hour (2A) check, and has not experienced a failure. The ATA member would like to see data indicating how the compliance times were established.

We do not agree with the commenter's request to change the compliance times. The commenter provides no alternative compliance times for the repetitive

tasks, or technical justification for changing the compliance times. In developing an appropriate compliance time for this action, we considered the urgency associated with the subject unsafe condition, and the practical aspect of accomplishing the repetitive inspections and cleaning tasks within a period of time that corresponds to the normal scheduled maintenance for most affected operators. We point out that the compliance times correspond with those in the MCAI. However, according to the provisions of paragraph (g)(1) of the AD, we may approve a request to adjust the compliance time if the request includes data that prove that the new compliance time would provide an acceptable level of safety. We have made no change to the AD in this regard.

Request To Incorporate/Publish Certain Information

The Modification and Replacement Parts Association (MARPA) states that, frequently, airworthiness directives are based on service information originating with the type certificate holder or its suppliers. MARPA adds that manufacturer service documents are privately authored instruments generally having copyright protection against duplication and distribution. MARPA notes that when a service document is incorporated by reference into a public document, such as an airworthiness directive, it loses its private, protected status and becomes a public document. MARPA adds that if a service document is used as a mandatory element of compliance, it should not simply be referenced, but should be incorporated into the regulatory document. MARPA states that, by definition, public laws must be public, which means they cannot rely upon private writings; especially when the private writings originate in a foreign country. MARPA notes that since the interpretation of a document is a question of law, and not fact, a service document not incorporated by reference will not be considered in a legal finding of the meaning of an airworthiness directive. MARPA is concerned that the failure to incorporate essential service information could result in a court decision invalidating the airworthiness directive.

MARPA notes that it has been advised that service documents are not usually incorporated by reference into proposed actions (NPRMs). MARPA adds that there is no indication in the proposed action that the FAA intends to incorporate by reference the necessary service information, and it is unclear whether that has been overlooked. MARPA asks that future proposed actions indicate the FAA intent by including the following statement: ''We intend to incorporate by reference the following publication(s):''.

MARPA adds that incorporated by reference service documents should be made available to the public by publication in the Docket Management System (DMS), keyed to the action that incorporates them. MARPA believes that this publication should occur when the NPRM is published, to permit the public to review and comment on the entire proposed action. MARPA notes that the stated purpose of the incorporation by reference method is brevity, to keep from expanding the **Federal Register** needlessly by publishing documents already in the hands of the affected individuals; traditionally, ''affected individuals'' means aircraft owners and operators, who are generally provided service information by the manufacturer. MARPA adds that a new class of affected individuals has emerged, since the majority of aircraft maintenance is now performed by specialty shops instead of aircraft owners and operators. MARPA notes that this new class includes maintenance and repair organizations, component servicing and repair shops, parts purveyors and distributors, and organizations manufacturing or servicing alternatively certified parts under section 21.303 (''Replacement and modification parts'') of the Federal Aviation Regulations (14 CFR 21.303). MARPA adds that the distribution to owners may, when the owner is a financing or leasing institution, not actually reach the persons responsible for accomplishing the airworthiness directive. Therefore, MARPA asks that the service documents deemed essential to the accomplishment of the NPRM be incorporated by reference into the regulatory instrument, and published in the DMS.

We do not agree with the commenter's request to indicate our intent in an NPRM to incorporate by reference particular publications. When we reference certain service information in a proposed AD, the public can assume we intend to IBR that service information, as required by the Office of the Federal Register. No change to this AD is necessary in regard to the commenter's request.

In regard to the commenter's request to post service bulletins on the Department of Transportation's DMS, we are currently in the process of reviewing issues surrounding the posting of service bulletins on the DMS as part of an AD docket. Once we have thoroughly examined all aspects of this issue and have made a final determination, we will consider whether our current practice needs to be revised. No change to the AD is necessary in response to this comment.

Request To Delete ''Certified'' From AD Applicability

MARPA questions the use of the adjective ''certified'' for the subject airplane models. MARPA asks what a ''certified'' model is and if the use of that word implies that ''uncertified'' models exist that are exempt from the NPRM. MARPA adds that perhaps the word ''certificated'' was intended instead, but was changed to avoid the use of the same word twice in the same sentence, which would make more sense. MARPA suggests that the word ''certified'' be dropped, as it appears to be both superfluous and confusing.

We do not agree with the commenter's request. We identified ''all certified models'' in the applicability of the NPRM to follow the MCAI; that phrase refers to all dash numbers of a particular airplane model. ''All certified models'' is different from ''certificated in any category,'' which refers to the category of type certification for the airplane (normal, utility, transport, etc.). We made no change to the AD in this regard.

Conclusion

We reviewed the available data, including the comments received, and determined that air safety and the public interest require adopting the AD with the changes described previously. We determined that these changes will not increase the economic burden on any operator or increase the scope of the AD.

Differences Between This AD and the MCAI or Service Information

We have reviewed the MCAI and related service information and, in general, agree with their substance. But we might have found it necessary to use different words from those in the MCAI to ensure the AD is clear for U.S. operators and is enforceable in a U.S. court of law. In making these changes, we do not intend to differ substantively from the information provided in the MCAI and related service information.

We might also have required different actions in this AD from those in the MCAI in order to follow our FAA policies. Any such differences are described in a separate paragraph of the AD. These requirements, if any, take precedence over the actions copied from the MCAI.

Costs of Compliance

Based on the service information, we estimate that this AD affects about 675 products of U.S. registry. We also estimate that it would take about 4 work-hours per product to comply with this AD. The average labor rate is $80 per work-hour. Based on these figures, we estimate the cost of the AD on U.S. operators to be $216,000, or $320 per product.

Authority for This Rulemaking

Title 49 of the United States Code specifies the FAA's authority to issue rules on aviation safety. Subtitle I, section 106, describes the authority of the FAA Administrator. ''Subtitle VII: Aviation Programs,'' describes in more detail the scope of the Agency's authority.

We are issuing this rulemaking under the authority described in ''Subtitle VII, Part A, Subpart III, Section 44701: General requirements.'' Under that section, Congress charges the FAA with promoting safe flight of civil aircraft in air commerce by prescribing regulations for practices, methods, and procedures the Administrator finds necessary for safety in air commerce. This regulation is within the scope of that authority because it addresses an unsafe condition that is likely to exist or develop on products identified in this rulemaking action.

Regulatory Findings

We determined that this AD will not have federalism implications under Executive Order 13132. This AD will not have a substantial direct effect on the States, on the relationship between the national government and the States, or on the distribution of power and responsibilities among the various levels of government.

For the reasons discussed above, I certify that this AD:

(1) Is not a ''significant regulatory action'' under Executive Order 12866;

(2) Is not a ''significant rule'' under DOT Regulatory Policies and Procedures (44 FR 11034, February 26, 1979); and

(3) Will not have a significant economic impact, positive or negative, on a substantial number of small entities under the criteria of the Regulatory Flexibility Act.

We prepared a regulatory evaluation of the estimated costs to comply with this AD and placed it in the AD Docket.

Examining the AD Docket

You may examine the AD docket on the Internet at *http://dms.dot.gov*; or in person at the Docket Management Facility between 9 a.m. and 5 p.m., Monday through Friday, except Federal holidays. The AD docket contains the NPRM, the regulatory evaluation, any comments received, and other information. The street address for the Docket Office (telephone (800) 647–5227) is in the **ADDRESSES** section. Comments will be available in the AD docket shortly after receipt.

List of Subjects in 14 CFR Part 39

Air transportation, Aircraft, Aviation safety, Incorporation by reference, Safety.

Adoption of the Amendment

■ Accordingly, under the authority delegated to me by the Administrator, the FAA amends 14 CFR part 39 as follows:

PART 39—AIRWORTHINESS DIRECTIVES

■ 1. The authority citation for part 39 continues to read as follows:

Authority: 49 U.S.C. 106(g), 40113, 44701.

§ 39.13 [Amended]

■ 2. The FAA amends § 39.13 by adding the following new AD:

2007–13–08 Airbus: Amendment 39–15112. Docket No. FAA–2006–26051; Directorate Identifier 2006–NM–154–AD.

Effective Date

(a) This airworthiness directive (AD) becomes effective July 25, 2007.

Affected ADs

(b) None.

Applicability

(c) This AD applies to Airbus Model A318, A319, A320 and A321 airplanes, all certified models, all serial numbers, certificated in any category; except airplanes identified in paragraphs (c)(1) and (c)(2) of this AD.

(1) Airplanes equipped with Hamilton Sundstrand APIC APS 3200 auxiliary power units (APUs), that have received Airbus Modification 35803 in production or Airbus Service Bulletin A320–49–1070 in service.

(2) Airplanes equipped with Honeywell 131–9A APUs, that have received Airbus Modification 35936 in production or Airbus Service Bulletin A320–49–1075 in service.

Reason

(d) An operator reported black smoke at the rear of the fuselage during taxi after landing. The smoke was caused by a fire in the APU air intake. Analysis has demonstrated that following numerous unsuccessful APU start attempts in flight, there is a risk of reverse flow, leading to flame propagation to the APU air inlet and air intake duct. If this zone is contaminated, a fire may be initiated. The flightcrew operating manual limits the number of APU start attempts as follows: After three starter motor duty cycles, wait 60 minutes before attempting three more cycles. The MCAI mandates repetitive inspections of the APU starter motor, APU inlet plenum, and APU air intake, as well as repetitive cleaning of the APU air intake; and applicable corrective actions.

Actions and Compliance

(e) Unless already done, do the following actions except as stated in paragraph (f) below.

(1) Within the next 600 flight hours following the effective date of this AD: Inspect the APU starter motor, APU air inlet plenum, and APU air intake, and do the applicable corrective actions before further flight, in accordance with the instructions given in Airbus Service Bulletin A320–49–1068, Revision 01, dated February 2, 2006.

(2) Repeat the inspection per above paragraph (e)(1) of this AD, at intervals not exceeding 600 flight hours.

(3) Prior to the accumulation of 2,400 flight hours since the aircraft's first flight, or within the next 600 flight hours after the effective date of this AD, whichever occurs later, unless accomplished before the effective date of this AD in accordance with Airbus Service Bulletin A320–49–1068, dated June 2, 2005: Clean the APU air intake in accordance with the instructions given in Airbus Service Bulletin A320–49–1068, Revision 01, dated February 2, 2006.

(4) Repeat the cleaning task per above paragraph (e)(3) of this AD, at intervals not exceeding 2,400 flight hours.

(5) After embodiment of Airbus Service Bulletin A320–49–1070, dated July 28, 2006 (on airplanes equipped with APIC APS 3200 APUs); or Airbus Service Bulletin A320–49–1075, dated September 22, 2006, or Revision 01, dated December 1, 2006 (on airplanes equipped with Honeywell 131–9A APUs); as applicable; the inspections and cleaning as described above are no longer required.

FAA AD Differences

(f) None.

Other FAA AD Provisions

(g) The following provisions also apply to this AD:

(1) Alternative Methods of Compliance (AMOCs): The Manager, International Branch, ANM–116, FAA, has the authority to approve AMOCs for this AD, if requested using the procedures found in 14 CFR 39.19. Send information to ATTN: Tim Dulin, Aerospace Engineer, 1601 Lind Avenue, SW., Renton, Washington 98057–3356; telephone (425) 227–2141; fax (425) 227–1149. Before using any approved AMOC on any airplane to which the AMOC applies, notify your appropriate principal inspector (PI) in the FAA Flight Standards District Office (FSDO), or lacking a PI, your local FSDO.

(2) Airworthy Product: For any requirement in this AD to obtain corrective actions from a manufacturer or other source, use these actions if they are FAA-approved. Corrective actions are considered FAA-approved if they are approved by the State of Design Authority (or their delegated agent). You are required to assure the product is airworthy before it is returned to service.

(3) Reporting Requirements: For any reporting requirement in this AD, under the provisions of the Paperwork Reduction Act, the Office of Management and Budget (OMB) has approved the information collection

requirements and has assigned OMB Control Number 2120–0056.

Related Information

(h) Refer to MCAI European Aviation Safety Agency Airworthiness Directive 2006–0153 R1, dated November 27, 2006 (corrected November 29, 2006), which references Airbus Service Bulletins A320–49–1068, Revision 01, dated February 2, 2006; A320–49–1070, dated July 28, 2006; and A320–49–1075, dated September 22, 2006, and Revision 01, dated December 1, 2006; for related information.

Material Incorporated by Reference

(i) You must use Airbus Service Bulletin A320–49–1068, Revision 01, dated February 2, 2006, to do the actions required by this AD, unless the AD specifies otherwise. If accomplished, you must use the applicable Airbus Service Bulletin specified in Table 1 of this AD to perform the optional terminating action specified in this AD.

TABLE 1.—OPTIONAL MATERIAL INCORPORATED BY REFERENCE

Airbus Service Bulletin	Revision level	Date
A320–49–1070	Original	July 28, 2006.
A320–49–1075	Original	September 22, 2006.
A320–49–1075	01	December 1, 2006.

(1) The Director of the Federal Register approved the incorporation by reference of this service information under 5 U.S.C. 552(a) and 1 CFR part 51.

(2) For service information identified in this AD, contact Airbus, 1 Rond Point Maurice Bellonte, 31707 Blagnac Cedex, France.

(3) You may review copies at the FAA, Transport Airplane Directorate, 1601 Lind Avenue, SW., Renton, Washington 98057–3356; or at the National Archives and Records Administration (NARA). For information on the availability of this material at NARA, call 202–741–6030, or go to: *http://www.archives.gov/federal-register/cfr/ibr-locations.html.*

Issued in Renton, Washington, on June 12, 2007.

Ali Bahrami,

Manager, Transport Airplane Directorate, Aircraft Certification.

[FR Doc. E7–11780 Filed 6–19–07; 8:45 am]

BILLING CODE 4910–13–P

SECURITIES AND EXCHANGE COMMISSION

17 CFR Part 200

[RELEASE NO. 34–55540A; INTERNATIONAL SERIES RELEASE NO. 1301A; FILE NO. S7–12–05]

RIN 3235–AJ38

Termination of Foreign Private Issuer's Registration of a Class of Securities Under Section 12(G) and Duty to File Reports Under Section 13(A) or 15(D) of the Securities Exchange Act of 1934

AGENCY: Securities and Exchange Commission.

ACTION: Correction to final rule.

SUMMARY: The Commission adopted amendments to the language of the third-party and issuer tender offer best-price rules on November 1, 2006. This document contains a correction to the final rule that was published on April 5, 2007 [72 FR 16934].

DATES: *Effective Date:* June 4, 2007.

FOR FURTHER INFORMATION CONTACT: Linda Cullen, Program Information Specialist, Office of the Secretary, at (202) 551–5402.

SUPPLEMENTARY INFORMATION: The Commission adopted amendments to the language of the third-party and issuer tender offer best-price rules on November 1, 2006. In this release, the instruction for the authority citation in FR Doc. E7–5947 in the April 5, 2007 issue of the **Federal Register** is being corrected.

PART 200—[CORRECTED]

1. On page 16955, in the first column, the amendatory language for amendment 1 is corrected to read as follows:

''1. The authority citation for part 200, subpart A, continues to read, in part, as follows:

Authority: 15 U.S.C. 77o, 77s, 77sss, 78d, 78d–1, 78d–2, 78w, 78*ll*(d), 78mm, 80a–37, 80b–11, and 7202, unless otherwise noted.''

* * * * *

Dated: June 15, 2007.

Nancy M. Morris,

Secretary.

[FR Doc. E7–11911 Filed 6–19–07; 8:45 am]

BILLING CODE 8010–01–P

DEPARTMENT OF HOMELAND SECURITY

Coast Guard

33 CFR Part 117

[CGD05–07–061]

RIN 1625–AA–09

Drawbridge Operation Regulations; Delaware River, between Tacony, PA, and Palmyra, NJ

AGENCY: Coast Guard, DHS.

ACTION: Notice of temporary deviation from regulations.

SUMMARY: The Commander, Fifth Coast Guard District, has approved a temporary deviation from the regulations governing the operation of the Tacony-Palmyra Bridge, at mile 107.2, across Delaware River, between Tacony, PA, and Palmyra, NJ. This deviation allows the drawbridge to remain closed-to-navigation from 6 a.m. on July 9 until and including 10 p.m. on July 11, 2007, and from 6 a.m. on July 16 until and including 10 p.m. on July 18, 2007, to facilitate electrical repairs.

DATES: This deviation is effective from 6 a.m. on July 9, 2007, to 10 p.m. on July 18, 2007.

ADDRESSES: Materials referred to in this document are available for inspection or copying at Commander (dpb), Fifth Coast Guard District, Federal Building, 1st Floor, 431 Crawford Street, Portsmouth, VA 23704–5004 between 8 a.m. and 4 p.m., Monday through Friday, except Federal holidays. The telephone number is (757) 398–6222. Commander (dpb), Fifth Coast Guard District maintains the public docket for this temporary deviation.

FOR FURTHER INFORMATION CONTACT: Waverly W. Gregory, Jr., Bridge Administrator, Fifth Coast Guard District, at (757) 398–6222.

SUPPLEMENTARY INFORMATION: The Tacony-Palmyra Bridge, a lift drawbridge, has a vertical clearance in the closed position to vessels of 50 feet, above mean high water.

Carr & Duff, Inc., on behalf of the bridge owner the Burlington County Bridge Commission, has requested a temporary deviation from the current operating regulations set out in 33 CFR 117.5 and 117.716 to close the drawbridge to navigation to facilitate the replacement of submarine cable termination boxes on the drawbridge.

To facilitate the submarine cable replacement, the Tacony-Palmyra

Bridge will be maintained in the closed-to-navigation position from 6 a.m. on Monday, July 9 until and including 10 p.m. on Wednesday, July 11, 2007, and from 6 a.m. on Monday, July 16 until and including 10 p.m. on Wednesday, July 18, 2007.

This deviation from the operating regulations is authorized under 33 CFR 117.35.

Dated: June 11, 2007.

Waverly W. Gregory, Jr.,

Chief, Bridge Administration, Branch Fifth Coast Guard District.

[FR Doc. E7–11955 Filed 6–19–07; 8:45 am]

BILLING CODE 4910–15–P

DEPARTMENT OF HOMELAND SECURITY

Coast Guard

33 CFR Part 165

[CGD09–07–036]

RIN 1625–AA00

Safety Zone; Gardens of the Magnificent Mile Fireworks, Chicago River, Chicago, IL

AGENCY: Coast Guard, DHS.

ACTION: Temporary final rule.

SUMMARY: The Coast Guard is establishing a temporary safety zone on the Chicago River, Chicago, IL. This zone is intended to restrict vessels from a portion of the Chicago River during the Gardens of the Magnificent Mile fireworks display on June 23, 2007. This temporary safety zone is necessary to protect spectators and vessels from the hazards associated with fireworks displays.

DATES: This rule is effective from 8:45 p.m. to 9:45 p.m. on June 23, 2007.

ADDRESSES: Documents indicated in this preamble as being available in the docket, are part of docket CGD09–07–036 and are available for inspection or copying at U.S. Coast Guard Sector Lake Michigan, 2420 South Lincoln Memorial Drive, Milwaukee, Wisconsin 53207 between 8:30 p.m. and 3 p.m. Monday through Friday, except Federal holidays.

FOR FURTHER INFORMATION CONTACT: Chief Warrant Officer Brad Hinken, U.S. Coast Guard Sector Lake Michigan, Prevention Department, 2420 South Lincoln Memorial Drive, Milwaukee, Wisconsin 53207; (414) 747–7154.

SUPPLEMENTARY INFORMATION:

Regulatory Information

We did not publish a notice of proposed rulemaking (NPRM) for this regulation. Under 5 U.S.C. 553(b)(B), the Coast Guard finds that good cause exists for not publishing an NPRM. The permit application was not received in time to publish an NPRM followed by a final rule before the effective date.

Under 5 U.S.C. 553(d)(3), good cause exists for making this rule effective less than 30 days after publication in the **Federal Register**. Delaying this rule would be contrary to the public interest of ensuring the safety of spectators and vessels during this event and immediate action is necessary to prevent possible loss of life or property. The Coast Guard has not received any complaints or negative comments previously with regard to this event.

Background and Purpose

This temporary safety zone is necessary to ensure the safety of vessels and spectators from hazards associated with a fireworks display. Based on accidents that have occurred in other Captain of the Port zones, and the explosive hazards of fireworks, the Captain of the Port Lake Michigan has determined fireworks launches proximate to watercraft pose significant risk to public safety and property. The likely combination of large numbers of recreation vessels, congested waterways, darkness punctuated by bright flashes of light, alcohol use, and debris falling into the water could easily result in serious injuries or fatalities. Establishing a safety zone to control vessel movement around the location of the launch platform will help ensure the safety of persons and property at these events and help minimize the associated risks.

Discussion of Rule

A temporary safety zone is necessary to ensure the safety of spectators and vessels during the setup, loading and launching of a fireworks display in conjunction with the Gardens of the Magnificent Mile fireworks display. The fireworks display will occur between 8:45 p.m. and 9:45 p.m. on June 23, 2007.

The safety zone for the fireworks will encompass all waters of the Chicago River Main Branch, from the east side of the Michigan Avenue Bridge to the west side of the Columbus Avenue Bridge. The size of this zone was determined using the National Fire Prevention Association guidelines and local knowledge of wind and currents.

All persons and vessels shall comply with the instructions of the Coast Guard Captain of the Port or the designated on-scene representative. Entry into, transiting, or anchoring within the safety zone is prohibited unless authorized by the Captain of the Port Lake Michigan or his designated on-scene representative. The Captain of the Port or his designated on-scene representative may be contacted via VHF Channel 16.

Regulatory Evaluation

This rule is not a ''significant regulatory action'' under section 3(f) of Executive Order 12866, Regulatory Planning and Review, and does not require an assessment of potential costs and benefits under section 6(a)(3) of that Order. The Office of Management and Budget has not reviewed it under that Order.

We expect the economic impact of this rule to be so minimal that a full Regulatory Evaluation is unnecessary. This determination is based on the minimal time that vessels will be restricted from the zone and the zone is an area where the Coast Guard expects insignificant adverse impact to mariners from the zones' activation.

Small Entities

Under the Regulatory Flexibility Act (5 U.S.C. 601–612), we have considered whether this rule would have a significant economic impact on a substantial number of small entities. The term ''small entities'' comprises small businesses, not-for-profit organizations that are independently owned and operated and are not dominant in their fields, and governmental jurisdictions with populations of less than 50,000.

The Coast Guard certifies under 5 U.S.C. 605(b) that this rule will not have a significant economic impact on a substantial number of small entities.

This rule will affect the following entities, some of which may be small entities: The owners and operators of vessels intending to transit or anchor in a portion of the Chicago River at Chicago, IL, between 8:45 p.m. and 9:45 p.m. on June 23, 2007.

This safety zone will not have a significant economic impact on a substantial number of small entities for the following reasons: This rule will be in effect for only one hour for one event. Vessel traffic can safely pass outside the safety zone during the event. In the event that this temporary safety zone affects shipping, commercial vessels may request permission from the Captain of the Port Lake Michigan to transit through the safety zone. The Coast Guard will give notice to the public via a Broadcast to Mariners that the regulation is in effect.

Assistance for Small Entities

Under section 213(a) of the Small Business Regulatory Enforcement

Fairness Act of 1996 (Pub. L. 104–121), we offered to assist small entities in understanding the rule so that they could better evaluate its effects on them and participate in the rulemaking process. Small businesses may send comments on the actions of Federal employees who enforce, or otherwise determine compliance with, Federal regulations to the Small Business and Agriculture Regulatory Enforcement Ombudsman and the Regional Small Business Regulatory Fairness Boards. The Ombudsman evaluates these actions annually and rates each agency's responsiveness to small business. If you wish to comment on actions by employees of the Coast Guard, call 1–888–REG–FAIR (1–888–734–3247).

Collection of Information

This rule calls for no new collection of information under the Paperwork Reduction Act of 1995 (44 U.S.C. 3501–3520).

Federalism

A rule has implications for federalism under Executive Order 13132, Federalism, if it has substantial direct effect on State or local governments and would either preempt State law or impose a substantial direct cost of compliance on them. We have analyzed this rule under that Order and have determined that it does not have implications for federalism.

Unfunded Mandates Reform Act

The Unfunded Mandates Reform Act of 1995 (2 U.S.C. 1531–1538) requires Federal agencies to assess the effects of their discretionary regulatory actions. In particular, the Act addresses actions that may result in the expenditure by a State, local, or tribal government, in the aggregate, or by the private sector of $100,000,000 or more in any one year. Though this rule would not result in such expenditure, we do discuss the effects of this rule elsewhere in this preamble.

Taking of Private Property

This rule will not effect a taking of private property or otherwise have taking implications under Executive Order 12630, Governmental Actions and Interference with Constitutionally Protected Property Rights.

Civil Justice Reform

This rule meets applicable standards in sections 3(a) and 3(b)(2) of Executive Order 12988, Civil Justice Reform, to minimize litigation, eliminate ambiguity, and reduce burden.

Protection of Children

We have analyzed this rule under Executive Order 13045, Protection of Children from Environmental Health Risks and Safety Risks. This rule is not an economically significant rule and does not concern an environmental risk to health or risk to safety that may disproportionately affect children.

Indian Tribal Governments

The Coast Guard recognizes the treaty rights of Native American Tribes. Moreover, the Coast Guard is committed to working with Tribal Governments to implement local policies and to mitigate tribal concerns. We have determined that these special local regulations and fishing rights protection need not be incompatible. We have also determined that this Rule does not have tribal implications under Executive Order 13175, Consultation and Coordination with Indian Tribal Governments, because it does not have a substantial direct effect on one or more Indian tribes, on the relationship between the Federal Government and Indian tribes, or on the distribution of power and responsibilities between the Federal Government and Indian tribes. Nevertheless, Indian Tribes that have questions concerning the provisions of this Proposed Rule or options for compliance are encouraged to contact the point of contact listed under **FOR FURTHER INFORMATION CONTACT**.

Energy Effects

We have analyzed this rule under Executive Order 13211, Actions Concerning Regulations that Significantly Affect Energy Supply, Distribution, or Use. We have determined that it is not a ''significant energy action'' under that order because it is not a ''significant regulatory action'' under Executive Order 12866 and is not likely to have a significant adverse effect on the supply, distribution, or use of energy. The Administrator of the office of Information and Regulatory Affairs has not designated it as a significant energy action. Therefore, it does not require a statement of Energy Effects under Executive Order 13211.

Technical Standards

The National Technology Transfer and Advancement Act (NTTAA) (15 U.S.C. 272 note) directs agencies to use voluntary consensus standards in their regulatory activities unless the agency provides Congress, through the Office of Management and Budget, with an explanation of why using these standards would be inconsistent with applicable law or otherwise impractical. Voluntary consensus standards are technical standards (*e.g.*, specifications of materials, performance, design, or operation; test methods; sampling procedure; and related management system practices) that are developed or adopted by voluntary consensus standards bodies.

This rule does not use technical standards. Therefore, we did not consider the use of voluntary consensus standards.

Environment

We have analyzed this rule under Commandant Instruction M16475.lD, which guides the Coast Guard in complying with the National Environmental Policy Act of 1969 (NEPA) (42 U.S.C. 4321–4370f), and have concluded that there are no factors in this case that would limit the use of a categorical exclusion under section 2.B.2 of the Instruction. Therefore, this rule is categorically excluded, under figure 2–1, paragraph (34)(g), of the Instruction, from further environmental documentation. This event establishes a safety zone therefore paragraph (34)(g) of the Instruction applies.

A final ''Environmental Analysis Check List'' and a final ''Categorical Exclusion Determination'' are available in the docket where indicated under **ADDRESSES**.

List of Subjects in 33 CFR Part 165

Harbors, Marine safety, Navigation (water), Reporting and recordkeeping requirements, Security measures, Waterways.

■ For the reasons discussed in the preamble, the Coast Guard amends 33 CFR part 165 as follows:

PART 165—REGULATED NAVIGATION AREAS AND LIMITED ACCESS AREAS

■ 1. The authority citation for part 165 continues to read as follows:

Authority: 33 U.S.C. 1226, 1231; 46 U.S.C. Chapter 701; 50 U.S.C. 191, 195; 33 CFR 1.05–1, 6.04–1, 6.04–6, and 160.5; Pub. L. 107–295, 116 Stat. 2064; Department of Homeland Security Delegation No. 0170.1.

■ 2. A new temporary § 165.T09–036 is added as follows:

§ 165.T09–036 Safety zone; Gardens of the Magnificent Mile Fireworks, Chicago River, Chicago, IL.

(a) *Location*. The following area is a temporary safety zone: all waters of the Chicago River Main Branch, from the east side of the Michigan Avenue Bridge to the west side of the Columbus Avenue Bridge.

(b) *Effective period*. This regulation is effective from 8:45 p.m. (local) to 9:45 p.m. (local) on June 23, 2007.

(c) *Regulations*. (1) In accordance with the general regulations in section 165.23 of this part, entry into, transiting, or anchoring within this safety zone is prohibited unless authorized by the Captain of the Port Lake Michigan, or his on-scene representative.

(2) This safety zone is closed to all vessel traffic, except as may be permitted by the Captain of the Port Lake Michigan or his on-scene representative.

(3) The ''on-scene representative'' of the Captain of the Port is any Coast Guard commissioned, warrant or petty officer who has been designated by the Captain of the Port to act on his behalf. The on-scene representative of the Captain of the Port will be aboard either a Coast Guard or Coast Guard Auxiliary vessel. The Captain of the Port or his on-scene representative may be contacted via VHF Channel 16.

(4) Vessel operators desiring to enter or operate within the safety zone shall contact the Captain of the Port Lake Michigan or his on-scene representative to obtain permission to do so. Vessel operators given permission to enter or operate in the safety zone must comply with all directions given to them by the Captain of the Port Lake Michigan or his on-scene representative.

Dated: June 12, 2007.

Bruce C. Jones,

Captain, U.S. Coast Guard, Captain of the Port Lake Michigan.

[FR Doc. E7–11850 Filed 6–19–07; 8:45 am]

BILLING CODE 4910–15–P

DEPARTMENT OF HOMELAND SECURITY

Coast Guard

33 CFR Part 165

[CGD01–07–002]

RIN 1625–AA00

Safety Zone: Town of Weymouth Fourth of July Celebration Fireworks, Weymouth, MA

AGENCY: Coast Guard, DHS.

ACTION: Temporary final rule.

SUMMARY: The Coast Guard is establishing a temporary safety zone for the Town of Weymouth Fourth of July Celebration Fireworks on June 30, 2007, with a rain date of July 1, 2007 temporarily closing all navigable waters of Weymouth Fore River with in a five hundred (500) yard radius of the fireworks barge located at approximate position 42°15.2′ N, 070°56.7′ W. The safety zone is necessary to protect the life and property of the maritime public from the potential hazards posed by a fireworks display. The safety zone temporarily prohibits entry into or movement within this portion of Weymouth Fore River during its closure period.

DATES: This rule is effective from 8:30 p.m. until 11:15 p.m. on June 30, 2007, with a rain date of July 1, 2007.

ADDRESSES: Comments and material received from the public, as well as documents indicated in this preamble as being available in the docket are part of docket CGD01–07–002 and are available for inspection or copying at Sector Boston, 427 Commercial Street, Boston, MA between the hours of 8 a.m. and 3 p.m., Monday through Friday, except Federal holidays.

FOR FURTHER INFORMATION CONTACT: Petty Officer Joseph Yonker, Sector Boston, Waterways Management Division, at (617) 223–5007.

SUPPLEMENTARY INFORMATION:

Regulatory History

On April 16, 2007, we published a notice of proposed rulemaking (NPRM) entitled ''Safety Zone; Town of Weymouth Fourth of July Celebration Fireworks, Weymouth, Ma'' in the **Federal Register** (72 FR 18935). We did not receive any letters commenting on the proposed rule. No public meeting was requested, and none was held.

As the fireworks display is scheduled to occur on June 30, 2007, any delay encountered in the regulation's effective date would be contrary to the public interest since the safety zone is needed to prevent traffic from transiting a portion of Weymouth Fore River during the fireworks display thus ensuring that the maritime public is protected from any potential harm associated with such an event. Accordingly, under 5 U.S.C. 553(d)(3), the Coast Guard finds that good cause exists for making this rule effective less than 30 days after publication in the **Federal Register**.

Background and Purpose

This rule establishes a safety zone on the navigable waters of Weymouth Fore River within a 500 yard radius around the fireworks barge located at approximate position 42°15.2′ N, 070°56.7′ W. The safety zone is in effect from 8:30 p.m. EDT until 11:15 p.m. EDT on June 30, 2007.

The safety zone temporarily restricts movement within this portion of Weymouth Fore River and is needed to protect the maritime public from the dangers posed by a fireworks display. Marine traffic may transit safely outside of the zone during the effective period. The Captain of the Port does not anticipate any negative impact on vessel traffic due to the event. Public notifications will be made prior to the effective period via marine information broadcasts and Local Notice to Mariners.

Discussion of Comments and Changes

The Coast Guard did not receive any comments from the public in response to the NPRM and as a result, no changes have been made to this temporary final rule.

Regulatory Evaluation

This rule is not a ''significant regulatory action'' under section 3(f) of Executive Order 12866, Regulatory Planning and Review, and does not require an assessment of potential costs and benefits under section 6(a)(3) of that Order. The Office of Management and Budget has not reviewed it under that Order.

Although this rule prevents vessel traffic from transiting a portion of Weymouth Fore River during the effective period, the effects of this regulation will not be significant for several reasons: Vessels will be excluded from the proscribed area for two hours and forty-five minutes, vessels will be able to operate in the majority of Weymouth Fore River during the effective period, and advance notifications will be made to the local maritime community by marine information broadcasts and Local Notice to Mariners.

Small Entities

Under the Regulatory Flexibility Act (5 U.S.C. 601–612), we considered whether this rule would have a significant economic impact on a substantial number of small entities. The term ''small entities'' comprises small businesses, not-for-profit organizations that are independently owned and operated and are not dominant in their fields, and governmental jurisdictions with populations of less than 50,000.

The Coast Guard certifies under 5 U.S.C. 605(b) that this rule will not have a significant economic impact on a substantial number of small entities.

This rule will affect the following entities, some of which may be small entities: The owners or operators of vessels intending to transit or anchor in a portion of Weymouth Fore River from 8:30 p.m. EDT until 11:15 p.m. EDT on June 30, 2007.

This safety zone will not have a significant economic impact on a substantial number of small entities for the following reasons: This rule will be

in effect for only two hours and forty-five minutes, vessel traffic can safely pass around the zone, and advance notifications will be made to the local maritime community by marine information broadcasts and Local Notice to Mariners.

Assistance for Small Entities

Under section 213(a) of the Small Business Regulatory Enforcement Fairness Act of 1996 (Pub. L. 104–121), we offered to assist small entities in understanding the rule so that they could better evaluate its effects on them and participate in the rulemaking process.

Small businesses may send comments on the actions of Federal employees who enforce, or otherwise determine compliance with, Federal regulations to the Small Business and Agriculture Regulatory Enforcement Ombudsman and the Regional Small Business Regulatory Fairness Boards. The Ombudsman evaluates these actions annually and rates each agency's responsiveness to small business. If you wish to comment on actions by employees of the Coast Guard, call 1–888–REG-FAIR (1–888–734–3247). The Coast Guard will not retaliate against small entities that question or complain about this rule or any policy or action of the Coast Guard.

Collection of Information

This rule calls for no new collection of information under the Paperwork Reduction Act of 1995 (44 U.S.C. 3501–3520).

Federalism

A rule has implications for federalism under Executive Order 13132, Federalism, if it has a substantial direct effect on State or local governments and would either preempt State law or impose a substantial direct cost of compliance on them. We have analyzed this rule under that Order and have determined that it does not have implications for federalism.

Unfunded Mandates Reform Act

The Unfunded Mandates Reform Act of 1995 (2 U.S.C. 1531–1538) requires Federal agencies to assess the effects of their discretionary regulatory actions. In particular, the Act addresses actions that may result in the expenditure by State, local or tribal governments, in the aggregate, or by the private sector of $100,000,000 or more in any one year. Though this rule will not result in such an expenditure, we do discuss the effects of this rule elsewhere in this preamble.

Taking of Private Property

This rule will not effect a taking of private property or otherwise have taking implications under Executive Order 12630, Governmental Actions and Interference with Constitutionally Protected Property Rights.

Civil Justice Reform

This rule meets applicable standards in sections 3(a) and 3(b)(2) of Executive Order 12988, Civil Justice Reform, to minimize litigation, eliminate ambiguity, and reduce burden.

Protection of Children

We have analyzed this rule under Executive Order 13045, Protection of Children from Environmental Health Risks and Safety Risks. This rule is not an economically significant rule and does not pose an environmental risk to health or risk to safety that may disproportionately affect children.

Indian Tribal Governments

This rule does not have tribal implications under Executive Order 13175, Consultation and Coordination with Indian Tribal Governments, because it does not have a substantial direct effect on one or more Indian tribes, on the relationship between the Federal Government and Indian tribes, or on the distribution of power and responsibilities between the Federal Government and Indian tribes.

Energy Effects

We have analyzed this rule under Executive Order 13211, Actions Concerning Regulations That Significantly Affect Energy Supply, Distribution, or Use. We have determined that it is not a ''significant energy action'' under that order because it is not a ''significant regulatory action'' under Executive Order 12866 and is not likely to have a significant adverse effect on the supply, distribution, or use of energy. The Administrator of the Office of Information and Regulatory Affairs has not designated it as a significant energy action. Therefore, it does not require a Statement of Energy Effects under Executive Order 13211.

Technical Standards

The National Technology Transfer and Advancement Act (NTTAA) (15 U.S.C. 272 note) directs agencies to use voluntary consensus standards in their regulatory activities unless the agency provides Congress, through the Office of Management and Budget, with an explanation of why using these standards would be inconsistent with applicable law or otherwise impractical. Voluntary consensus standards are technical standards (*e.g.*, specifications of materials, performance, design, or operation; test methods; sampling procedures; and related management systems practices) that are developed or adopted by voluntary consensus standards bodies.

This rule does not use technical standards. Therefore, we did not consider the use of voluntary consensus standards.

Environment

We have analyzed this rule under Commandant Instruction M16475.1D and Department of Homeland Security Management Directive 5100.1, which guide the Coast Guard in complying with the National Environmental Policy Act of 1969 (NEPA) (42 U.S.C. 4321–4370f), and have concluded that there are no factors in this case that would limit the use of a categorical exclusion under 2.B.2 of the Instruction. Therefore, this rule is categorically excluded, under figure 2–1, paragraph (34)(g) of the Instruction, from further environmental documentation. This rule fits the category selected from paragraph (34)(g), as it would establish a safety zone that will be in effect for only two hours and forty-five minutes.

List of Subjects in 33 CFR Part 165

Harbors, Marine safety, Navigation (water), Reporting and recordkeeping requirements, Security measures, Waterways.

■ For the reasons discussed in the preamble, the Coast Guard amends 33 CFR part 165 as follows:

PART 165—REGULATED NAVIGATION AREAS AND LIMITED ACCESS AREAS

■ 1. The authority citation for part 165 continues to read as follows:

Authority: 33 U.S.C. 1226, 1231; 46 U.S.C. 701; 50 U.S.C. 191; 33 CFR 1.05–1, 6.04–1, 6.04–6, and 160.5; Pub. L. 107–295, 116 Stat. 2064; Department of Homeland Security Delegation No. 0170.1.

■ 2. Add temporary § 165.T01–002 to read as follows:

§ 165.T01–002 Safety Zone; Town of Weymouth Fourth of July Celebration Fireworks, Weymouth, Massachusetts.

(a) *Location.* The following area is a safety zone: All navigable waters of Weymouth Fore River within a 500 yard radius of the fireworks barge located at approximate position 42°15.2′ N, 070°56.7′ W.

(b) *Effective Date.* This section is effective from 8:30 p.m. EDT until 11:15 p.m. EDT on June 30, 2007.

(c) *Definitions.* (1) As used in this section, *designated representative* means a Coast Guard Patrol

Commander, including a Coast Guard coxswain, petty officer, or other officer operating a Coast Guard vessel and a Federal, State, and local officer designated by or assisting the Captain of the Port (COTP).

(2) *[Reserved]*

(d) *Regulations.* (1) In accordance with the general regulations in 165.23 of this part, entry into or movement within this zone by any person or vessel is prohibited unless authorized by the Captain of the Port (COTP), Boston or the COTP's designated representative.

(2) The safety zone is closed to all vessel traffic, except as may be permitted by the COTP or the COTP's designated representative.

(3) Vessel operators desiring to enter or operate within the safety zone must contact the COTP or the COTP's designated representative on VHF Channel 16 (156.8 MHz) to seek permission to do so. If permission is granted, vessel operators must comply with all directions given to them by the COTP or the COTP's designated representative.

Dated: May 25, 2007.

James L. McDonald,

Captain, U.S. Coast Guard, Captain of the Port, Boston, Massachusetts.

[FR Doc. E7–11851 Filed 6–19–07; 8:45 am]

BILLING CODE 4910–15–P

DEPARTMENT OF HOMELAND SECURITY

Coast Guard

33 CFR Part 165

[CGD01–07–043]

RIN 1625–AA00

Safety Zone: Sand and Sea Festival Fireworks Display, Salisbury, MA

AGENCY: Coast Guard, DHS.

ACTION: Temporary final rule.

SUMMARY: The Coast Guard is establishing a temporary safety zone for the Salisbury Chamber of Commerce and Salisbury Boardwalk Partnership Inc. July Fireworks on June 30, 2007, temporarily closing all navigable waters off of Salisbury Beach with in a five hundred (500) yard radius of the fireworks display located at approximate position 42°50.12″ N, 070°45.64″ W. The safety zone is necessary to protect the life and property of the maritime public from the potential hazards posed by a fireworks display. The safety zone temporarily prohibits entry into or movement within this portion off of Salisbury Beach during its closure period.

DATES: This rule is effective from 9:30 p.m. EDT on June 30, 2007 until 11:15 p.m. EDT on June 30, 2007.

ADDRESSES: Documents indicated in this preamble as being available in the docket are part of docket CGD01–07–043 and are available for inspection or copying at Sector Boston, 427 Commercial Street, Boston, MA between the hours of 8 a.m. and 3 p.m., Monday through Friday, except Federal holidays.

FOR FURTHER INFORMATION CONTACT: Petty Officer Joseph Yonker, Sector Boston, Waterways Management Division, at (617) 223–5007.

SUPPLEMENTARY INFORMATION:

Regulatory History

We did not publish a notice of proposed rulemaking (NPRM) for this regulation. As the fireworks display is scheduled to occur on June 30, 2007, any delay encountered in the regulation's effective date would be contrary to the public interest since the safety zone is needed to prevent traffic from transiting a portion of water off of Salisbury Beach during the fireworks display thus ensuring that the maritime public is protected from any potential harm associated with such an event. Accordingly, under 5 U.S.C. 553(b)(B), the Coast Guard finds that good cause exists for not publishing an NPRM.

For the same reasons, the Coast Guard finds, under 5 U.S.C. 553(d)(3), that good cause exists for making this rule effective less than 30 days after publication in the **Federal Register**.

Background and Purpose

This rule establishes a safety zone on the navigable waters off of Salisbury Beach within a 500 yard radius around the fireworks display located at approximate position 42°50.312′ N, 070°45.64′ W. The safety zone is in effect from 9:30 p.m. EDT until 11:15 p.m. EDT on June 30, 2007.

The safety zone temporarily restricts movement within this portion of water off of Salisbury Beach is needed to protect the maritime public from the dangers posed by a fireworks display. Marine traffic may transit safely outside of the zone during the effective period. The Captain of the Port does not anticipate any negative impact on vessel traffic due to the event. Public notifications will be made prior to the effective period via marine information broadcasts and Local Notice to Mariners.

Regulatory Evaluation

This rule is not a ''significant regulatory action'' under section 3(f) of Executive Order 12866, Regulatory Planning and Review, and does not require an assessment of potential costs and benefits under section 6(a)(3) of that Order. The Office of Management and Budget has not reviewed it under that Order.

The Coast Guard expects the economic impact of this rule to be so minimal that a full Regulatory Evaluation under of the regulatory policies and procedures of DHS is unnecessary.

Although this rule prevents vessel traffic from transiting a portion of the area off of Salisbury Beach during the effective period, the effects of this regulation will not be significant for several reasons: Vessels will be excluded from the proscribed area for one hour and forty-five minutes, vessels will be able to operate in the majority of the area off of Salisbury Beach during the effective period, and advance notifications will be made to the local maritime community by marine information broadcasts and Local Notice to Mariners.

Small Entities

Under the Regulatory Flexibility Act (5 U.S.C. 601–612), we considered whether this rule would have a significant economic impact on a substantial number of small entities. The term ''small entities'' comprises small businesses, not-for-profit organizations that are independently owned and operated and are not dominant in their fields, and governmental jurisdictions with populations of less than 50,000.

The Coast Guard certifies under 5 U.S.C. 605(b) that this rule will not have a significant economic impact on a substantial number of small entities.

This rule will affect the following entities, some of which may be small entities: The owners or operators of vessels intending to transit or anchor in a portion off of Salisbury Beach from 9:30 p.m. EDT until 11:15 p.m. EDT on June 30, 2007.

This safety zone will not have a significant economic impact on a substantial number of small entities for the following reasons: This rule will be in effect for only one hour and forty-five minutes, vessel traffic can safely pass around the zone, and advance notifications will be made to the local maritime community by marine information broadcasts and Local Notice to Mariners.

Assistance for Small Entities

Under section 213(a) of the Small Business Regulatory Enforcement Fairness Act of 1996 (Pub. L. 104–121),

we offered to assist small entities in understanding the rule so that they could better evaluate its effects on them and participate in the rulemaking process.

Small businesses may send comments on the actions of Federal employees who enforce, or otherwise determine compliance with, Federal regulations to the Small Business and Agriculture Regulatory Enforcement Ombudsman and the Regional Small Business Regulatory Fairness Boards. The Ombudsman evaluates these actions annually and rates each agency's responsiveness to small business. If you wish to comment on actions by employees of the Coast Guard, call 1–888–REG–FAIR (1–888–734–3247). The Coast Guard will not retaliate against small entities that question or complain about this rule or any policy or action of the Coast Guard.

Collection of Information

This rule calls for no new collection of information under the Paperwork Reduction Act of 1995 (44 U.S.C. 3501–3520).

Federalism

A rule has implications for federalism under Executive Order 13132, Federalism, if it has a substantial direct effect on State or local governments and would either preempt State law or impose a substantial direct cost of compliance on them. We have analyzed this rule under that Order and have determined that it does not have implications for federalism.

Unfunded Mandates Reform Act

The Unfunded Mandates Reform Act of 1995 (2 U.S.C. 1531–1538) requires Federal agencies to assess the effects of their discretionary regulatory actions. In particular, the Act addresses actions that may result in the expenditure by State, local or tribal governments, in the aggregate, or by the private sector of $100,000,000 or more in any one year. Though this rule will not result in such an expenditure, we do discuss the effects of this rule elsewhere in this preamble.

Taking of Private Property

This rule will not effect a taking of private property or otherwise have taking implications under Executive Order 12630, Governmental Actions and Interference with Constitutionally Protected Property Rights.

Civil Justice Reform

This rule meets applicable standards in sections 3(a) and 3(b)(2) of Executive Order 12988, Civil Justice Reform, to minimize litigation, eliminate ambiguity, and reduce burden.

Protection of Children

We have analyzed this rule under Executive Order 13045, Protection of Children from Environmental Health Risks and Safety Risks. This rule is not an economically significant rule and does not pose an environmental risk to health or risk to safety that may disproportionately affect children.

Indian Tribal Governments

This rule does not have tribal implications under Executive Order 13175, Consultation and Coordination with Indian Tribal Governments, because it does not have a substantial direct effect on one or more Indian tribes, on the relationship between the Federal Government and Indian tribes, or on the distribution of power and responsibilities between the Federal Government and Indian tribes.

Energy Effects

We have analyzed this rule under Executive Order 13211, Actions Concerning Regulations That Significantly Affect Energy Supply, Distribution, or Use. We have determined that it is not a ''significant energy action'' under that order because it is not a ''significant regulatory action'' under Executive Order 12866 and is not likely to have a significant adverse effect on the supply, distribution, or use of energy. The Administrator of the Office of Information and Regulatory Affairs has not designated it as a significant energy action. Therefore, it does not require a Statement of Energy Effects under Executive Order 13211.

Technical Standards

The National Technology Transfer and Advancement Act (NTTAA) (15 U.S.C. 272 note) directs agencies to use voluntary consensus standards in their regulatory activities unless the agency provides Congress, through the Office of Management and Budget, with an explanation of why using these standards would be inconsistent with applicable law or otherwise impractical. Voluntary consensus standards are technical standards (*e.g.*, specifications of materials, performance, design, or operation; test methods; sampling procedures; and related management systems practices) that are developed or adopted by voluntary consensus standards bodies.

This rule does not use technical standards. Therefore, we did not consider the use of voluntary consensus standards.

Environment

We have analyzed this rule under Commandant Instruction M16475.1D and Department of Homeland Security Management Directive 5100.1, which guide the Coast Guard in complying with the National Environmental Policy Act of 1969 (NEPA) (42 U.S.C. 4321–4370f), and have concluded that there are no factors in this case that would limit the use of a categorical exclusion under 2.B.2 of the Instruction. Therefore, this rule is categorically excluded, under figure 2–1, paragraph (34)(g) of the Instruction, from further environmental documentation. This rule fits the category selected from paragraph (34)(g), as it would establish a safety zone that will be in effect for only one hour and forty-five minutes.

List of Subjects in 33 CFR Part 165

Harbors, Marine safety, Navigation (water), Reporting and recordkeeping requirements, Security measures, Waterways.

■ For the reasons discussed in the preamble, the Coast Guard amends 33 CFR part 165 as follows:

PART 165—REGULATED NAVIGATION AREAS AND LIMITED ACCESS AREAS

■ 1. The authority citation for part 165 continues to read as follows:

Authority: 33 U.S.C. 1226, 1231; 46 U.S.C. 701; 50 U.S.C. 191; 33 CFR 1.05–1, 6.04–1, 6.04–6, and 160.5; Pub. L. 107–295, 116 Stat. 2064; Department of Homeland Security Delegation No. 0170.1.

■ 2. Add § 165.T01–043 to read as follows:

§ 165.T01–043 Safety Zone; Sand and Sea Festival Fireworks Dispaly, Salisbury, Massachusetts

(a) *Location.* The following area is a safety zone: All navigable waters off of Salisbury Beach within a 500 yard radius of the fireworks barge located at approximate position 42° 50.12′ N, 070° 45.64′ W.

(b) *Effective Date.* This section is effective from 9:30 p.m. EDT until 11:15 p.m. EDT on June 30, 2007.

(c) *Definitions.* As used in this section, *designated representative* means a Coast Guard Patrol Commander, including a Coast Guard coxswain, petty officer, or other officer operating a Coast Guard vessel and a Federal, State, and local officer designated by or assisting the Captain of the Port (COTP).

(d) *Regulations.* (1) In accordance with the general regulations in 165.23 of this part, entry into or movement within this zone by any person or vessel is prohibited unless authorized by the

Captain of the Port (COTP), Boston or the COTP's designated representative.

(2) The safety zone is closed to all vessel traffic, except as may be permitted by the COTP or the COTP's designated representative.

(3) Vessel operators desiring to enter or operate within the safety zone must contact the COTP or the COTP's designated representative on VHF Channel 16 (156.8 MHz) to seek permission to do so. If permission is granted, vessel operators must comply with all directions given to them by the COTP or the COTP's designated representative.

Dated: May 25, 2007.

James L. McDonald,

Captain, U.S. Coast Guard, Captain of the Port Boston, Massachusetts.

[FR Doc. E7–11856 Filed 6–19–07; 8:45 am]

BILLING CODE 4910–15–P

DEPARTMENT OF HOMELAND SECURITY

Coast Guard

33 CFR Part 165

[COTP San Francisco Bay 07–022]

RIN 1625–AA00

Safety Zone; Fireworks Extravaganza, City of Antioch, San Francisco Bay, CA

AGENCY: Coast Guard, DHS.

ACTION: Temporary final rule.

SUMMARY: The Coast Guard is establishing a temporary, moving safety zone in the navigable waters of the San Joaquin River for the loading, transport, and launching of fireworks used during the City of Antioch Fireworks Extravaganza, to be held on July 4, 2007. This safety zone is intended to prohibit vessels and people from entering into or remaining within the regulated areas in order to ensure the safety of participants and spectators.

DATES: This rule is effective from 8 a.m. to 9:30 p.m. on July 4, 2007.

ADDRESSES: Documents indicated in this preamble as being available in the docket, are part of the docket COTP San Francisco Bay 07–022 are available for inspection or copying at Coast Guard Sector San Francisco, 1 Yerba Buena Island, San Francisco, California, 94130, between 9 a.m. and 4 p.m., Monday through Friday, except Federal holidays.

FOR FURTHER INFORMATION CONTACT: Ensign Sheral Richardson United States Coast Guard Sector San Francisco, at (415) 556–2950 extension 136, or the 24-hour Command Center at (415) 399–3547.

SUPPLEMENTARY INFORMATION:

Regulatory Information

We did not publish a notice of proposed rulemaking (NPRM) for this regulation. Under 5 U.S.C. 553(b)(3)(B), the Coast Guard finds that good cause exists for not publishing an NPRM. Logistical details surrounding the event were not finalized and presented to the Coast Guard in time to draft and publish an NPRM. As such, the event would occur before the rulemaking process was complete. Because of the dangers posed by the pyrotechnics used in this fireworks display, this safety zone is necessary to provide for the safety of event participants, spectator craft, and other vessels transiting the event area. For the safety concerns noted, it is in the public interest to have these regulations in effect during the event.

Under 5 U.S.C. 553(d)(3), the Coast Guard finds that good cause exists for making this rule effective less than 30 days after publication in the **Federal Register**. Any delay in the effective date of this rule would expose mariners to the dangers posed by the pyrotechnics used in this fireworks display.

Background and Purpose

The City of Antioch will sponsor a fireworks display on July 4, 2007 in the waters of the San Joaquin River. The fireworks display is meant for entertainment purposes. This temporary, moving safety zone is issued to establish a temporary restricted area in the San Joaquin River around the fireworks launch barge during loading of the pyrotechnics, during the transit of the barge to the display location, and during the fireworks display. This restricted area around the launch barge is necessary to protect spectators, vessels, and other property from the hazards associated with the pyrotechnics on the fireworks barge.

Discussion of Rule

The Coast Guard is establishing a temporary, moving safety zone in the navigable waters of the San Joaquin River near Antioch's shoreline. During the loading of the fireworks barge, while the barge is being towed to the display location, and until the start of the fireworks display, the temporary, moving safety zone applies to the navigable waters around and under the fireworks barge within a radius of 100 feet. Fifteen minutes prior to and during the twenty minute fireworks display, the area to which the temporary safety zone applies will increase in size to encompass the navigable waters around and under the fireworks barge within a radius of 1,000 feet. Loading of the pyrotechnics onto the fireworks barge is scheduled to commence at 8 a.m. on July 4, 2007, and will take place at Fulton Shipyard, 307 Fulton Shipyard Road, Antioch, California. Towing of the barge from Fulton Shipyard to the display location is scheduled to take place between 7 p.m. and 9 p.m. on July 4, 2007. During the fireworks display, scheduled to commence at approximately 9 p.m., the fireworks barge will be located approximately 600 feet off of Antioch's shoreline in approximate position 38°01′21″ N, 121°49′06″ W and travel east in a straight line to 38°01′11″ N, 121°48′15″ W.

The effect of the temporary, moving safety zone will be to restrict navigation in the vicinity of the fireworks barge while the fireworks are loaded at Fulton Shipyard, during the transit of the fireworks barge, and until the conclusion of the scheduled display. Except for persons or vessels authorized by the Coast Guard Patrol Commander, no person or vessel may enter or remain in the restricted area. These regulations are needed to keep spectators and vessels a safe distance away from the fireworks barge to ensure the safety of participants, spectators, and transiting vessels.

Unauthorized persons or vessels are prohibited from entering or remaining in a safety zone. Vessels or persons violating this section will be subject to both criminal and civil penalties.

Regulatory Evaluation

This rule is not a ''significant regulatory action'' under section 3(f) of Executive Order 12866, Regulatory Planning and Review, and does not require an assessment of potential costs and benefits under section 6(a)(3) of that Order. The Office of Management and Budget has not reviewed it under that Order.

Although this regulation prevents traffic from transiting a portion of the San Joaquin River during the event, the effect of this regulation will not be significant due to the small size and limited duration of the regulated area. The entities most likely to be affected are pleasure craft engaged in recreational activities and sightseeing. We expect the economic impact of this rule to be so minimal that a full Regulatory Evaluation is unnecessary.

Small Entities

Under the Regulatory Flexibility Act (5 U.S.C. 601–612), we have considered whether this rule would have a significant economic impact on a substantial number of small entities. The term ''small entities'' comprises

small businesses, not-for-profit organizations that are independently owned and operated and are not dominant in their fields, and governmental jurisdictions with populations of less than 50,000.

The Coast Guard certifies under 5 U.S.C. 605(b) that this rule is not expected to have a significant economic impact on a substantial number of entities, some of which may be small entities. This rule may affect owners and operators of pleasure craft engaged in recreational activities and sightseeing. This rule will not have a significant economic impact on a substantial number of small entities for several reasons: (i) Vessel traffic can pass safely around the area, (ii) vessels engaged in recreational activities and sightseeing have ample space outside of the effected portion of the San Joaquin River to engage in these activities, (iii) this rule will encompass only a small portion of the waterway for a limited period of time, and (iv) the maritime public will be advised in advance of this safety zone via public notice to mariners.

Assistance for Small Entities

Under section 213(a) of the Small Business Regulatory Enforcement Fairness Act of 1996 (Pub. L. 104–121), we offered to assist small entities in understanding the rule so that they could better evaluate its effects on them and participate in the rulemaking process. If the rule will affect your small business, organization, or government jurisdiction and you have questions concerning its provisions, options for compliance, or assistance in understanding this rule, please contact Ensign Sheral Richardson, U.S. Coast Guard Sector San Francisco, at (415) 556–2950 extension 136.

Small businesses may send comments on the actions of Federal employees who enforce, or otherwise determine compliance with, Federal regulations to the Small Business and Agriculture Regulatory Enforcement Ombudsman and the Regional Small Business Regulatory Fairness Boards. The Ombudsman evaluates these actions annually and rates each agency's responsiveness to small business. If you wish to comment on actions by employees of the Coast Guard, call 1–888–REG–FAIR (1–888–734–3247).

Collection of Information

This rule calls for no new collection of information under the Paperwork Reduction Act of 1995 (44 U.S.C. 3501–3520).

Federalism

A rule has implications for federalism under Executive Order 13132, Federalism, if it has a substantial direct effect on State or local governments and would either preempt State law or impose a substantial direct cost of compliance on them. We have analyzed this rule under that Order and have determined that it does not have implications for federalism.

Unfunded Mandates Reform Act

The Unfunded Mandates Reform Act of 1995 (2 U.S.C. 1531–1538) requires Federal agencies to assess the effects of their discretionary regulatory actions. In particular, the Act addresses actions that may result in the expenditure by a State, local, or tribal government, in the aggregate, or by the private sector of $100,000,000 or more in any one year. Though this rule will not result in such expenditure, we do discuss the effects of this rule elsewhere in this preamble.

Taking of Private Property

This rule will not affect a taking of private property or otherwise have taking implications under Executive Order 12630, Governmental Actions and Interference with Constitutionally Protected Property Rights.

Civil Justice Reform

This rule meets applicable standards in sections 3(a) and 3(b)(2) of Executive Order 12988, Civil Justice Reform, to minimize litigation, eliminate ambiguity, and reduce burden.

Protection of Children

We have analyzed this rule under Executive Order 13045, Protection of Children from Environmental Health Risks and Safety Risks. This rule is not an economically significant rule and does not create an environmental risk to health or risk to safety that may disproportionately affect children.

Indian Tribal Governments

This rule does not have tribal implications under Executive Order 13175, Consultation and Coordination with Indian Tribal Governments, because it does not have a substantial direct effect on one or more Indian tribes, on the relationship between the Federal Government and Indian tribes, or on the distribution of power and responsibilities between the Federal Government and Indian tribes.

Energy Effects

We have analyzed this rule under Executive Order 13211, Actions Concerning Regulations That Significantly Affect Energy Supply, Distribution, or Use. We have determined that it is not a ''significant energy action'' under that order because it is not a ''significant regulatory action'' under Executive Order 12866 and is not likely to have a significant adverse effect on the supply, distribution, or use of energy. The Administrator of the Office of Information and Regulatory Affairs has not designated it as a significant energy action. Therefore, it does not require a Statement of Energy Effects under Executive Order 13211.

Technical Standards

The National Technology Transfer and Advancement Act (NTTAA) (15 U.S.C. 272 note) directs agencies to use voluntary consensus standards in their regulatory activities unless the agency provides Congress, through the Office of Management and Budget, with an explanation of why using these standards would be inconsistent with applicable law or otherwise impractical. Voluntary consensus standards are technical standards (*e.g.*, specifications of materials, performance, design, or operation; test methods; sampling procedures; and related management systems practices) that are developed or adopted by voluntary consensus standards bodies.

This rule does not use technical standards. Therefore, we did not consider the use of voluntary consensus standards.

Environment

We have analyzed this rule under Commandant Instruction M16475.lD and Department of Homeland Security Management Directive 5100.1, which guide the Coast Guard in complying with the National Environmental Policy Act of 1969 (NEPA) (42 U.S.C. 4321–4370f), and have concluded that there are no factors in this case that would limit the use of a categorical exclusion under section 2.B.2 of the Instruction. Therefore, this rule is categorically excluded, under figure 2–1, paragraph (34)(g), of the Instruction, from further environmental documentation.

A final ''Environmental Analysis Check List'' and a final ''Categorical Exclusion Determination'' will be available in the docket where indicated under **ADDRESSES**.

List of Subjects in 33 CFR Part 165

Harbors, Marine safety, Navigation (water), Reporting and recordkeeping requirements, Security measures, Waterways.

■ For the reasons discussed in the preamble, the Coast Guard amends 33 CFR Part 165 as follows:

PART 165—REGULATED NAVIGATION AREAS AND LIMITED ACCESS AREAS

■ 1. The authority citation for part 165 continues to read as follows:

Authority: 33 U.S.C. 1226, 1231; 46 U.S.C. Chapter 701; 50 U.S.C. 191, 195; 33 CFR 1.05–1, 6.04–1, 6.04–6, and 160.5; Pub. L. 107–295, 116 Stat. 2064; Department of Homeland Security Delegation No. 0170.1.

■ 2. Add temporary § 165.T11–198 to read as follows:

§ 165.T11–198 Safety Zone; Fireworks Extravaganza, City of Antioch, San Francisco Bay, CA.

(a) *Location.* A temporary, moving safety zone is established for the waters of the San Joaquin River surrounding a barge used as the launch platform for a fireworks display. During the loading of the fireworks barge, during the transit of the fireworks barge to the display location, and until fifteen minutes prior to the start of the fireworks display, the restricted area encompasses the navigable waters around and under the fireworks barge within a radius of 100 feet. During the fifteen minutes preceding the fireworks display and during the twenty minute fireworks display itself, the safety zone increases in size to encompass the navigable waters around and under the fireworks launch barge within a radius of 1,000 feet. Loading of the pyrotechnics onto the fireworks barge is scheduled to commence at 8 a.m. on July 4, 2007, and will take place at Fulton Shipyard in Antioch. Towing of the barge from Fulton Shipyard to the display location is scheduled to take place between 7 p.m. and 9 p.m. on July 4, 2007. During the fireworks display, scheduled to start at approximately 9 p.m. on July 4, 2007, the barge will be located approximately 600 feet off from Antioch's shoreline in the San Joaquin River in approximate position 38°01′21″ N, 121°49′06″ W and travel east in a straight line to 38°01′11″ N, 121°48′15″ W.

(b) *Effective period.* This section is effective from 8 a.m. through 9:30 p.m. on July 4, 2007. If the event concludes prior to the scheduled termination time, the Coast Guard will cease enforcement of the safety zone and will announce that fact via Broadcast Notice to Mariners.

(c) *Regulations.* In accordance with the general regulations in § 165.23 of this part, entry into, transit through, or anchoring within this safety zone by all vessels and persons is prohibited, unless specifically authorized by the Captain of the Port San Francisco, or his designated representative.

(d) *Enforcement.* All persons and vessels shall comply with the instructions of the Coast Guard Captain of the Port, or the designated on-scene patrol personnel. Patrol personnel can be comprised of commissioned, warrant, and petty officers of the Coast Guard onboard Coast Guard, Coast Guard Auxiliary, local, State, and Federal law enforcement vessels. Upon being hailed by U.S. Coast Guard patrol personnel by siren, radio, flashing light, or other means, the operator of a vessel shall proceed as directed. The U.S. Coast Guard may be assisted in the patrol and enforcement of this safety zone by local law enforcement as necessary.

Dated: June 4, 2007.

W.J. Uberti,

Captain, U.S. Coast Guard, Captain of the Port, San Francisco.

[FR Doc. E7–11858 Filed 6–19–07; 8:45 am]

BILLING CODE 4910–15–P

DEPARTMENT OF HOMELAND SECURITY

Coast Guard

33 CFR Part 165

[CGD01–07–067]

RIN 1625–AA00

Safety Zone: Summer Solstice/U.S. Chamber of Commerce Fireworks, Mystic Seaport, CT

AGENCY: Coast Guard, DHS.

ACTION: Temporary final rule.

SUMMARY: The Coast Guard is establishing a temporary safety zone for the Summer Solstice/U.S. Chamber of Commerce Fireworks from a barge off of Mystic Seaport, Mystic River, Mystic, CT. The safety zone is necessary to protect the life and property of the maritime community from the hazards posed by the fireworks display. Entry into or movement within this safety zone during the enforcement period is prohibited without approval of the Captain of the Port, Long Island Sound.

DATES: This rule is effective from 9 p.m. to 10 p.m. on June 25, 2007.

ADDRESSES: Documents indicated in this preamble as being available in the docket are part of docket CGD01–07–067 and will be available for inspection or copying at Sector Long Island Sound, New Haven, CT, between 9 a.m. and 3 p.m., Monday through Friday, except Federal holidays.

FOR FURTHER INFORMATION CONTACT: Lieutenant D. Miller, Chief, Waterways Management Division, Coast Guard Sector Long Island Sound at (203) 468–4596.

SUPPLEMENTARY INFORMATION:

Regulatory Information

We did not publish a notice of proposed rulemaking (NPRM) for this regulation. Under 5 U.S.C. 553(b)(B), the Coast Guard finds that good cause exists for not publishing an NPRM. The Coast Guard did not receive an Application for Approval of Marine Event for this event until April 27, 2007, thereby making an NPRM impracticable. A delay or cancellation of the fireworks display in order to accommodate a full notice and comment period would be contrary to the public interest.

Under 5 U.S.C. 553(d)(3), the Coast Guard finds that good cause exists for making this rule effective less than 30 days after publication in the **Federal Register**. Any delay encountered in this regulation's effective date would be impracticable and contrary to public interest since immediate action is needed to prevent traffic from transiting a portion of Mystic River off Mystic Seaport, Mystic, CT and to protect the maritime public from the hazards associated with this fireworks event.

The safety zone should have minimal negative impact on the public and navigation, because it will be enforced for a one-hour period only. Also, the area closed by the safety zone is minimal thus allowing vessels to continue to transit the Mystic River by going around the safety zone.

Background and Purpose

The Summer Solstice/U.S. Chamber of Commerce Fireworks display will be taking place from a barge in Mystic River, off Mystic Seaport, Mystic, CT from 9 p.m. to 10 p.m. on June 25, 2007. This safety zone is necessary to protect the life and property of the maritime public from the hazards posed by the fireworks display. It will protect the maritime public by prohibiting entry into or movement within this portion of Mystic River for a total of one hour from beginning to completion of the event.

Discussion of Rule

This regulation establishes a temporary safety zone on the navigable waters of Mystic River off Mystic Seaport, Mystic, CT within a 400–foot radius of the fireworks barge located at approximate position 41°22.068′ N, 071°57.925′ W. The temporary safety zone will be outlined by temporary marker buoys installed by the event organizers.

This action is intended to prohibit vessel traffic in a portion of Mystic River off Mystic Seaport, Mystic, CT to provide for the protection of life and property of the maritime public. The

safety zone will be enforced from 9 p.m. until 10 p.m. on June 25, 2007. Marine traffic may transit safely outside of the safety zone during the event thereby allowing navigation of the rest of Mystic River except for the portion delineated by this rule.

The Captain of the Port anticipates minimal negative impact on vessel traffic from this event due to the limited area and duration covered by this safety zone. Public notifications will be made prior to the effective period via local notice to mariners and marine information broadcasts.

Regulatory Evaluation

This rule is not a ''significant regulatory action'' under section 3(f) of Executive Order 12866, Regulatory Planning and Review, and does not require an assessment of potential costs and benefits under section 6(a)(3) of that Order. The Office of Management and Budget has not reviewed it under that Order.

This regulation may have some impact on the public, but the potential impact will be minimized for the following reasons: Vessels will only be excluded from the area of the safety zone for one hour and vessels will be able to operate in other areas of Mystic River off Mystic Seaport, Mystic, CT during the enforcement period.

Small Entities

Under the Regulatory Flexibility Act (5 U.S.C. 601–612), we have considered whether this rule will have a significant economic impact on a substantial number of small entities. The term ''small entities'' comprises small businesses, not-for-profit organizations that are independently owned and operated and are not dominant in their fields, and governmental jurisdictions with populations of less than 50,000.

The Coast Guard certifies under 5 U.S.C. 605(b) that this rule will not have a significant economic impact on a substantial number of small entities. This rule may affect the following entities, some of which may be small entities: The owners or operators of recreational vessels intending to transit or anchor in those portions of Mystic River covered by the closure. For the reasons outlined in the Regulatory Evaluation section above, this rule will not have a significant impact on a substantial number of small entities.

If you think that your business, organization, or governmental jurisdiction qualifies as a small entity and that this rule would have a significant economic impact on it, please submit a comment (see **ADDRESSES**) explaining why you think it qualifies and how and to what degree this rule would economically affect it.

Assistance for Small Entities

Under subsection 213(a) of the Small Business Regulatory Enforcement Fairness Act of 1996 [Pub. L. 104–121], the Coast Guard wants to assist small entities in understanding this rule so that they can better evaluate its effects on them and participate in the rulemaking process. If this rule will affect your small business, organization, or governmental jurisdiction and you have questions concerning its provisions or options for compliance, please call Lieutenant D. Miller, Chief, Waterways Management Division, Sector Long Island Sound, at (203) 468–4596.

Small businesses may send comments on the actions of Federal employees who enforce, or otherwise determine compliance with, Federal regulations to the Small Business and Agriculture Regulatory Enforcement Ombudsman and the Regional Small Business Regulatory Fairness Boards. The Ombudsman evaluates these actions annually and rates each agency's responsiveness to small business. If you wish to comment on actions by employees of the Coast Guard, call 1–888–REG–FAIR (1–888–734–3247). The Coast Guard will not retaliate against small entities that question or complain about this rule or any policy or action of the Coast Guard.

Collection of Information

This rule calls for no new collection of information under the Paperwork Reduction Act of 1995 (44 U.S.C. 3501–3520).

Federalism

A rule has implications for federalism under Executive Order 13132, Federalism, if it has a substantial direct effect on State or local governments and would either preempt State law or impose a substantial direct cost of compliance on them. We have analyzed this rule under that Order and have determined that it does not have implications for federalism.

Unfunded Mandates Reform Act

The Unfunded Mandates Reform Act of 1995 (2 U.S.C. 1531–1538) requires Federal agencies to assess the effects of their discretionary regulatory actions. In particular, the Act addresses actions that may result in the expenditure by a State, local, or tribal government, in the aggregate, or by the private sector of $100,000,000 or more in any one year. Though this rule will not result in such expenditure, we do discuss the effects of this rule elsewhere in this preamble.

Taking of Private Property

This rule will not effect a taking of private property or otherwise have taking implications under Executive Order 12630, Governmental Actions and Interference with Constitutionally Protected Property Rights.

Civil Justice Reform

This rule meets applicable standards in sections 3(a) and 3(b)(2) of Executive Order 12988, Civil Justice Reform, to minimize litigation, eliminate ambiguity, and reduce burden.

Protection of Children

We have analyzed this rule under Executive Order 13045, Protection of Children from Environmental Health Risks and Safety Risks. This rule is not an economically significant rule and does not create an environmental risk to safety that may disproportionately affect children.

Indian Tribal Governments

This rule does not have tribal implications under Executive Order 13175, Consultation and Coordination with Indian Tribal Governments, because it will not have a substantial direct effect on one or more Indian tribes, on the relationship between the Federal Government and Indian tribes, or on the distribution of power and responsibilities between the Federal Government and Indian tribes.

Energy Effects

We have analyzed this rule under Executive Order 13211, Actions Concerning Regulations That Significantly Affect Energy Supply, Distribution, or Use. We have determined that it is not a ''significant energy action'' under that order because it is not a ''significant regulatory action'' under Executive Order 12866 and is not likely to have a significant adverse effect on the supply, distribution, or use of energy. The Administrator of the Office of Information and Regulatory Affairs has not designated it as a significant energy action. Therefore, it does not require a Statement of Energy Effects under Executive Order 13211.

Technical Standards

The National Technology Transfer and Advancement Act (NTTAA) (15 U.S.C. 272 note) directs agencies to use voluntary consensus standards in their regulatory activities unless the agency provides Congress, through the Office of Management and Budget, with an explanation of why using these

standards would be inconsistent with applicable law or otherwise impractical. Voluntary consensus standards are technical standards (*e.g.*, specifications of materials, performance, design, or operation; test methods; sampling procedures; and related management systems practices) that are developed or adopted by voluntary consensus standards bodies.

This rule does not use technical standards. Therefore, we did not consider the use of voluntary consensus standards.

Environment

We have analyzed this rule under Commandant Instruction M16475.1D and Department of Homeland Security Management Directive 5100.1, which guide the Coast Guard in complying with the National Environmental Policy Act of 1969 (NEPA) (42 U.S.C. 4321–4370f), and have concluded that there are no factors in this case that would limit the use of the categorical exclusion under section 2.B.2 of the Instruction. Therefore, this rule is categorically excluded, under figure 2–1, paragraph (34)(g), of the Instruction, from further environmental documentation. This rule falls under the provisions of paragraph (34)(g) because the rule establishes a safety zone.

A final ''Environmental Analysis Check List'' and a final ''Categorical Exclusion Determination'' will be available in the docket where indicated under **ADDRESSES**.

List of Subjects in 33 CFR Part 165

Harbors, Marine safety, Navigation (water), Reporting and recordkeeping requirements, Security measures, Waterways.

■ For the reasons discussed in the preamble, the Coast Guard amends 33 CFR part 165 as follows:

PART 165—REGULATED NAVIGATION AREAS AND LIMITED ACCESS AREAS

■ 1. The authority citation for part 165 continues to read as follows:

Authority: 33 U.S.C. 1226 and 1231; 46 U.S.C. Chapter 701; 50 U.S.C. 191, 195; 33 CFR 1.05–1, 6.04–1, 6.04–6, and 160.5; Pub. L. 107–295, 116 Stat. 2064; Department of Homeland Security Delegation No. 0170.1.

■ 2. Add temporary § 165.T01–067 to read as follows:

§ 165.T01–067 Safety Zone: Summer Solstice/US Chamber of Commerce Fireworks, off Mystic Seaport, Mystic, CT.

(a) *Location.* The following area is a safety zone: All navigable waters of Mystic River in a 400-foot radius of a fireworks barge located at approximate position 41°22.068′ N, 071°57.925′ W. All coordinates are North American Datum 1983.

(b) *Definition.* The following definition applies to this section: *Designated on-scene patrol personnel* means any commissioned, warrant, and petty officer of the U.S. Coast Guard operating a Coast Guard vessel who has been authorized to act on the behalf of the Captain of the Port, Long Island Sound.

(c) *Regulations.* (1) The general regulations contained in 33 CFR 165.23 apply.

(2) In accordance with the general regulations in § 165.23 of this part, entry into or movement within this zone is prohibited unless authorized by the Captain of the Port, Long Island Sound.

(3) All persons and vessels shall comply with the Coast Guard Captain of the Port or designated on-scene patrol personnel.

(4) Upon being hailed by a U.S. Coast Guard vessel by siren, radio, flashing light or other means, the operator of the vessel shall proceed as directed.

(5) Persons and vessels may request permission to enter the zone on VHF–16 or via telephone at (203) 468–4401.

(d) *Enforcement period.* This section will be enforced from 9 p.m. to 10 p.m. on Monday June 25, 2007.

Dated: June 5, 2007.

J.J. Plunkett,

Commander, U. S. Coast Guard, Captain of the Port, Long Island Sound, Acting.

[FR Doc. E7–11861 Filed 6–19–07; 8:45 am]

BILLING CODE 4910–15–P

DEPARTMENT OF HOMELAND SECURITY

Coast Guard

33 CFR Part 165

[CGD01–07–065]

RIN 1625–AA00

Safety Zone: City of Long Beach Fireworks, Atlantic Ocean, Long Beach, NY

AGENCY: Coast Guard, DHS.

ACTION: Temporary final rule.

SUMMARY: The Coast Guard is establishing a temporary safety zone for the City of Long Beach Fireworks on the Atlantic Ocean off of Riverside Boulevard, Long Beach, NY. The safety zone is necessary to protect the life and property of the maritime community from the hazards posed by the fireworks display. Entry into or movement within this safety zone during the enforcement period is prohibited without approval of the Captain of the Port, Long Island Sound.

DATES: This rule is effective from 8:30 p.m. on July 6, 2007 to 10:30 p.m. on July 7, 2007.

ADDRESSES: Documents indicated in this preamble as being available in the docket are part of docket CGD01–07–065 and will be available for inspection or copying at Sector Long Island Sound, New Haven, CT, between 9 a.m. and 3 p.m., Monday through Friday, except Federal holidays.

FOR FURTHER INFORMATION CONTACT: Lieutenant D. Miller, Chief, Waterways Management Division, Coast Guard Sector Long Island Sound at (203) 468–4596.

SUPPLEMENTARY INFORMATION:

Regulatory Information

We did not publish a notice of proposed rulemaking (NPRM) for this regulation. Under 5 U.S.C. 553(b)(B), the Coast Guard finds that good cause exists for not publishing an NPRM. The Coast Guard did not receive an Application for Approval of Marine Event for this event in sufficient time to conduct a notice and comment period, thereby making an NPRM impracticable. A delay or cancellation of the fireworks display in order to accommodate a full notice and comment period would be contrary to the pubic interest.

Under 5 U.S.C. 553(d)(3), the Coast Guard finds that good cause exists for making this rule effective less than 30 days after publication in the **Federal Register**. Any delay encountered in this regulation's effective date would be impracticable and contrary to public interest since immediate action is needed to prevent vessel traffic from transiting a navigable portion of the Atlantic Ocean, near Long Beach, NY and to protect the maritime public from the hazards associated with this fireworks event.

The temporary zone should have minimal negative impact on the public and navigation because it will be enforced for a two hour period on a single day and the area closed by the safety zone is minimal, thus allowing vessels to transit around the safety zone on the Atlantic Ocean, near Long Beach, NY.

Background and Purpose

The City of Long Beach Fireworks display will be taking place in the Atlantic Ocean off Riverside Blvd., Long Beach, NY from 8:30 p.m. to 10:30 p.m. on July 6, 2007. If the fireworks display is cancelled due to inclement weather on July 6, 2007, it will take place from

8:30 p.m. to 10:30 p.m. on July 7, 2007. This safety zone is necessary to protect the life and property of the maritime public from the hazards posed by the fireworks display. It will protect the maritime public by prohibiting entry into or movement within the navigable portion of the Atlantic Ocean one hour prior to, during, and one hour after the stated event.

Discussion of Rule

This regulation establishes a temporary safety zone on the navigable waters of the Atlantic Ocean, near Long Beach, NY within a 1200-foot radius of the fireworks barge located at approximate position 40°34′38.77″ N, 073°39′41.32″ W. The temporary safety zone will be outlined by temporary marker buoys installed by the event organizers.

This action is intended to prohibit vessel traffic in a navigable portion of the Atlantic Ocean, near Long Beach, NY to provide for the protection of life and property of the maritime public. The safety zone will be enforced from 8:30 p.m. until 10:30 p.m. on July 6, 2007 or if the event is postponed due to inclement weather, from 8:30 p.m. to 10:30 p.m. on July 7, 2007. Marine traffic may transit safely outside of the safety zone during the event thereby allowing navigation of the rest of the Atlantic Ocean except for the portion delineated by this rule.

The Captain of the Port anticipates minimal negative impact on vessel traffic because of this safety zone due to the limited area and duration covered by this regulation. Public notifications will be made prior to the effective period via local notice to mariners and marine information broadcasts.

Regulatory Evaluation

This rule is not a ''significant regulatory action'' under section 3(f) of Executive Order 12866, Regulatory Planning and Review, and does not require an assessment of potential costs and benefits under section 6(a)(3) of that Order. The Office of Management and Budget has not reviewed it under that Order.

This regulation may have some impact on the public, but the potential impact will be minimized for the following reasons: Vessels will only be excluded from the area of the safety zone for two hours and vessels will be able to operate in other areas of the Atlantic Ocean, near Long Beach, NY during the enforcement period.

Small Entities

Under the Regulatory Flexibility Act (5 U.S.C. 601–612), we have considered whether this rule will have a significant economic impact on a substantial number of small entities. The term ''small entities'' comprises small businesses, not-for-profit organizations that are independently owned and operated and are not dominant in their fields, and governmental jurisdictions with populations of less than 50,000.

The Coast Guard certifies under 5 U.S.C. 605(b) that this rule will not have a significant economic impact on a substantial number of small entities.

This rule may affect the following entities, some of which may be small entities: The owners or operators of vessels intending to transit or anchor in those portions of the Atlantic Ocean covered by the safety zone. For the reasons outlined in the Regulatory Evaluation section above, this rule will not have a significant impact on a substantial number of small entities.

If you think that your business, organization, or governmental jurisdiction qualifies as a small entity and that this rule would have a significant economic impact on it, please submit a comment (see **ADDRESSES**) explaining why you think it qualifies and how and to what degree this rule would economically affect it.

Assistance for Small Entities

Under section 213(a) of the Small Business Regulatory Enforcement Fairness Act of 1996 (Pub. L. 104–121), we offered to assist small entities in understanding the rule so that they can better evaluate its effects on them and participate in the rulemaking. If this rule will affect your small business, organization, or governmental jurisdiction and you have questions concerning its provisions or options for compliance, please call Lieutenant D. Miller, Chief, Waterways Management Division, Sector Long Island Sound, at (203) 468–4596.

Small businesses may send comments on the actions of Federal employees who enforce, or otherwise determine compliance with, Federal regulations to the Small Business and Agriculture Regulatory Enforcement Ombudsman and the Regional Small Business Regulatory Fairness Boards. The Ombudsman evaluates these actions annually and rates each agency's responsiveness to small business. If you wish to comment on actions by employees of the Coast Guard, call 1–888–REG–FAIR (1–888–734–3247). The Coast Guard will not retaliate against small entities that question or complain about this rule or any policy or action of the Coast Guard.

Collection of Information

This rule calls for no new collection of information under the Paperwork Reduction Act of 1995 (44 U.S.C. 3501–3520).

Federalism

A rule has implications for federalism under Executive Order 13132, Federalism, if it has a substantial direct effect on State or local governments and would either preempt State law or impose a substantial direct cost of compliance on them. We have analyzed this rule under that Order and have determined that it does not have implications for federalism.

Unfunded Mandates Reform Act

The Unfunded Mandates Reform Act of 1995 (2 U.S.C. 1531–1538) requires Federal agencies to assess the effects of their discretionary regulatory actions. In particular, the Act addresses actions that may result in the expenditure by a State, local, or tribal government, in the aggregate, or by the private sector of $100,000,000 or more in any one year. Though this rule will not result in such an expenditure, we do discuss the effects of this rule elsewhere in this preamble.

Taking of Private Property

This rule will not effect a taking of private property or otherwise have taking implications under Executive Order 12630, Governmental Actions and Interference with Constitutionally Protected Property Rights.

Civil Justice Reform

This rule meets applicable standards in sections 3(a) and 3(b)(2) of Executive Order 12988, Civil Justice Reform, to minimize litigation, eliminate ambiguity, and reduce burden.

Protection of Children

We have analyzed this rule under Executive Order 13045, Protection of Children from Environmental Health Risks and Safety Risks. This rule is not an economically significant rule and will not concern an environmental risk to health or risk to safety that may disproportionately affect children.

Indian Tribal Governments

This rule does not have tribal implications under Executive Order 13175, Consultation and Coordination with Indian Tribal Governments, because it will not have a substantial direct effect on one or more Indian tribes, on the relationship between the Federal Government and Indian tribes, or on the distribution of power and

responsibilities between the Federal Government and Indian tribes.

Energy Effects

We have analyzed this rule under Executive Order 13211, Actions Concerning Regulations That Significantly Affect Energy Supply, Distribution, or Use. We have determined that it is not a ''significant energy action'' under that order because it is not a ''significant regulatory action'' under Executive Order 12866 and is not likely to have a significant adverse effect on the supply, distribution, or use of energy. The Administrator of the Office of Information and Regulatory Affairs has not designated it as a significant energy action. Therefore, it does not require a Statement of Energy Effects under Executive Order 13211.

Technical Standards

The National Technology Transfer and Advancement Act (NTTAA) (15 U.S.C. 272 note) directs agencies to use voluntary consensus standards in their regulatory activities unless the agency provides Congress, through the Office of Management and Budget, with an explanation of why using these standards would be inconsistent with applicable law or otherwise impractical. Voluntary consensus standards are technical standards (*e.g.*, specifications of materials, performance, design, or operation; test methods; sampling procedures; and related management systems practices) that are developed or adopted by voluntary consensus standards bodies.

This rule does not use technical standards. Therefore, we did not consider the use of voluntary consensus standards.

Environment

We have analyzed this rule under Commandant Instruction M16475.1D and Department of Homeland Security Management Directive 5100.1, which guide the Coast Guard in complying with the National Environmental Policy Act of 1969 (NEPA) (42 U.S.C. 4321–4370f), and have concluded that there are no factors in this case that would limit the use of the categorical exclusion under section 2.B.2 of the Instruction. Therefore, this rule is categorically excluded, under figure 2–1, paragraph (34)(g), of the Instruction, from further environmental documentation as the rule establishes a safety zone.

A final ''Environmental Analysis Check List'' and a final ''Categorical Exclusion Determination'' will be available in the docket where indicated under **ADDRESSES**.

List of Subjects in 33 CFR Part 165

Harbors, Marine safety, Navigation (water), Reporting and recordkeeping requirements, Security measures, Waterways.

■ For the reasons discussed in the preamble, the Coast Guard amends 33 CFR part 165 as follows:

PART 165—REGULATED NAVIGATION AREAS AND LIMITED ACCESS AREAS

■ 1. The authority citation for part 165 continues to read as follows:

Authority: 33 U.S.C. 1226 and 1231; 46 U.S.C. Chapter 701; 50 U.S.C. 191, 195; 33 CFR 1.05–1, 6.04–1, 6.04–6, and 160.5; Pub. L. 107–295, 116 Stat. 2064; Department of Homeland Security Delegation No. 0170.1.

■ 2. Add temporary § 165.T01–065 to read as follows:

§ 165.T01–065 Safety Zone: City of Long Beach Fireworks, Atlantic Ocean, Long Beach, NY.

(a) *Location.* The following area is a safety zone: All navigable waters of the Atlantic Ocean in a 1200-foot radius of a fireworks barge located at approximate position 40°34′38.77″ N, 073°39′41.32″ W.

(b) *Definition.* The following definition applies to this section: *Designated on-scene patrol personnel,* means any commissioned, warrant, and petty officer of the U.S. Coast Guard operating a Coast Guard vessel who has been authorized to act on the behalf of the Captain of the Port, Long Island Sound.

(c) *Regulations.* (1) The general regulations contained in 33 CFR 165.23 apply.

(2) In accordance with the general regulations in § 165.23 of this part, entry into or movement within these zones is prohibited unless authorized by the Captain of the Port, Long Island Sound.

(3) All persons and vessels shall comply with the Coast Guard Captain of the Port, Long Island Sound or designated on-scene patrol personnel.

(4) Upon being hailed by a U.S. Coast Guard vessel by siren, radio, flashing light or other means, the operator of the vessel shall proceed as directed.

(5) Persons and vessels may request permission to enter the zone on VHF–16 or via telephone at (203) 468–4401.

(c) *Enforcement period.* This section will be enforced from 8:30 p.m. to 10:30 p.m. on Friday, July 6, 2007. If the fireworks display is cancelled due to inclement weather, it will be enforced from 8:30 p.m. to 10:30 p.m. on Saturday, July 7, 2007.

Dated: June 5, 2007.

J.J. Plunkett,

Commander, U.S. Coast Guard, Captain of the Port, Long Island Sound, Acting.

[FR Doc. E7–11879 Filed 6–19–07; 8:45 am]

BILLING CODE 4910–15–P

DEPARTMENT OF HOMELAND SECURITY

Coast Guard

33 CFR Part 165

[CGD01–07–064]

RIN 1625–AA00

Safety Zone: Riverfest 2007, Connecticut River, Hartford, CT

AGENCY: Coast Guard, DHS.

ACTION: Temporary final rule.

SUMMARY: The Coast Guard is establishing temporary safety zones for the Riverfest 2007 Fireworks on the Connecticut River off Hartford, CT. The safety zones are necessary to protect the life and property of the maritime community from the hazards posed by the fireworks display. Entry into or movement within the safety zones during the enforcement period is prohibited without approval of the Captain of the Port, Long Island Sound.

DATES: This rule is effective from 8:30 p.m. on July 7, 2007 until 10:30 p.m. on July 8, 2007.

ADDRESSES: Documents indicated in this preamble as being available in the docket, are part of docket CGD01–07–064 and will be available for inspection or copying at Sector Long Island Sound, New Haven, CT, between 9 a.m. and 3 p.m., Monday through Friday, except Federal holidays.

FOR FURTHER INFORMATION CONTACT: Lieutenant D. Miller, Chief, Waterways Management Division, Coast Guard Sector Long Island Sound at (203) 468–4596.

SUPPLEMENTARY INFORMATION:

Regulatory Information

We did not publish a notice of proposed rulemaking (NPRM) for this regulation. Under 5 U.S.C. 553(b)(B), the Coast Guard finds that good cause exists for not publishing an NPRM. The Coast Guard did not receive an Application for Approval of Marine Event for this event in sufficient time, thereby making an NPRM impracticable and contrary to the pubic interest.

Under 5 U.S.C. 553(d)(3), the Coast Guard finds that good cause exists for making this rule effective less than 30 days after publication in the **Federal**

Register. Any delay encountered in this regulation's effective date would be impracticable and contrary to public interest since immediate action is needed to prevent traffic from transiting a portion of the Connecticut River, Hartford, CT and to protect the maritime public from the hazards associated with this fireworks event.

The safety zones should have minimal negative impact on the public and navigation because they will be enforced for a two hour period on a single day and the area closed by the safety zones is minimal, allowing vessels to transit around the zones on the Connecticut River, Hartford, CT.

Background and Purpose

The Riverfest 2007 Fireworks display will take place on the Connecticut River, Hartford, CT from 8:30 p.m. to 10:30 p.m. on July 7, 2007. If the fireworks display is cancelled due to inclement weather, the event will take place from 8:30 p.m. to 10:30 p.m. on July 8, 2007. These safety zones are necessary to protect the life and property of the maritime public from the hazards posed by the fireworks display. They will protect the maritime public by prohibiting entry into or movement within this portion of the Connecticut River one hour prior to, during and one hour after the stated event.

Discussion of Rule

This regulation establishes temporary safety zones on the waters of the Connecticut River, Hartford, CT within a 500-foot radius of each of the two fireworks barges located at approximate positions 41°45′39.93″ N, 072°39′49.14″ W and 41°45′36.06″ N, 072°39′46.03″ W. The temporary safety zones will be outlined by temporary marker buoys installed by the event organizers.

This action is intended to prohibit vessel traffic in a portion of the Connecticut River, Hartford, CT to provide for the protection of life and property of the maritime public. The safety zones will be enforced from 8:30 p.m. until 10:30 p.m. on July 7, 2007, or if the event is postponed due to weather, from 8:30 p.m. to 10:30 p.m. on July 8, 2007. Marine traffic may transit safely outside of the safety zones during the event thereby allowing navigation of the rest of the Connecticut River except for the portion delineated by this rule.

The Captain of the Port anticipates minimal negative impact on vessel traffic due to this event due to the limited area and duration covered by these safety zones. Public notifications will be made prior to the effective period via local notice to mariners and marine information broadcasts.

Regulatory Evaluation

This rule is not a ''significant regulatory action'' under section 3(f) of Executive Order 12866, Regulatory Planning and Review, and does not require an assessment of potential costs and benefits under section 6(a)(3) of that Order. The Office of Management and Budget has not reviewed it under that Order.

This regulation may have some impact on the public, but the potential impact will be minimized for the following reasons: Vessels will only be excluded from the area of the safety zones for two hours; and vessels will be able to operate in other areas of the Connecticut River, Hartford, CT during the enforcement period.

Small Entities

Under the Regulatory Flexibility Act (5 U.S.C. 601–612), we have considered whether this rule will have a significant economic impact on a substantial number of small entities. The term ''small entities'' comprises small businesses, not-for-profit organizations that are independently owned and operated and are not dominant in their fields, and governmental jurisdictions with populations of less than 50,000.

The Coast Guard certifies under 5 U.S.C. 605(b) that this rule will not have a significant economic impact on a substantial number of small entities.

This rule may affect the following entities, some of which may be small entities: The owners or operators of vessels intending to transit or anchor in those portions of the Connecticut River covered by the safety zone. For the reasons outlined in the Regulatory Evaluation section above, this rule will not have a significant impact on a substantial number of small entities.

If you think that your business, organization, or governmental jurisdiction qualifies as a small entity and that this rule would have a significant economic impact on it, please submit a comment (see **ADDRESSES**) explaining why you think it qualifies and how and to what degree this rule would economically affect it.

Assistance for Small Entities

Under section 213(a) of the Small Business Regulatory Enforcement Fairness Act of 1996 (Pub. L. 104–121), we offered to assist small entities in understanding this rule so that they can better evaluate its effects on them and participate in the rulemaking process. If this rule will affect your small business, organization, or governmental jurisdiction and you have questions concerning its provisions please call Lieutenant D. Miller, Chief, Waterways Management Division, Sector Long Island Sound, at (203) 468–4596. Small businesses may send comments on the actions of Federal employees who enforce, or otherwise determine compliance with, Federal regulations to the Small Business and Agriculture Regulatory Enforcement Ombudsman and the Regional Small Business Regulatory Fairness Boards. The Ombudsman evaluates these actions annually and rates each agency's responsiveness to small business. If you wish to comment on actions by employees of the Coast Guard, call 1–888–REG–FAIR (1–888–734–3247). The Coast Guard will not retaliate against small entities that question or complain about this rule or any policy or action of the Coast Guard.

Collection of Information

This rule calls for no new collection of information under the Paperwork Reduction Act of 1995 (44 U.S.C. 3501–3520).

Federalism

A rule has implications for federalism under Executive Order 13132, Federalism, if it has a substantial direct effect on State or local governments and would either preempt State law or impose a substantial direct cost of compliance on them. We have analyzed this rule under that Order and have determined that it does not have implications for federalism.

Unfunded Mandates Reform Act

The Unfunded Mandates Reform Act of 1995 (2 U.S.C. 1531–1538) requires Federal agencies to assess the effects of their discretionary regulatory actions. In particular, the Act addresses actions that may result in the expenditure by a State, local, or tribal government, in the aggregate, or by the private sector of $100,000,000 or more in any one year. Though this rule will not result in such an expenditure, we do discuss the effects of this rule elsewhere in this preamble.

Taking of Private Property

This rule will not effect a taking of private property or otherwise have taking implications under Executive Order 12630, Governmental Actions and Interference with Constitutionally Protected Property Rights.

Civil Justice Reform

This rule meets applicable standards in sections 3(a) and 3(b)(2) of Executive Order 12988, Civil Justice Reform, to minimize litigation, eliminate ambiguity, and reduce burden.

Protection of Children

We have analyzed this rule under Executive Order 13045, Protection of Children from Environmental Health Risks and Safety Risks. This rule is not an economically significant rule and will not concern an environmental risk to health or risk to safety that may disproportionately affect children.

Indian Tribal Governments

This rule does not have tribal implications under Executive Order 13175, Consultation and Coordination with Indian Tribal Governments, because it will not have a substantial direct effect on one or more Indian tribes, on the relationship between the Federal Government and Indian tribes, or on the distribution of power and responsibilities between the Federal Government and Indian tribes.

Energy Effects

We have analyzed this rule under Executive Order 13211, Actions Concerning Regulations That Significantly Affect Energy Supply, Distribution, or Use. We have determined that it is not a ''significant energy action'' under that order because it is not a ''significant regulatory action'' under Executive Order 12866 and is not likely to have a significant adverse effect on the supply, distribution, or use of energy. It has not been designated by the Administrator of the Office of Information and Regulatory Affairs as a significant energy action. Therefore, it does not require a Statement of Energy Effects under Executive Order 13211.

Technical Standards

The National Technology Transfer and Advancement Act (NTTAA) (15 U.S.C. 272 note) directs agencies to use voluntary consensus standards in their regulatory activities unless the agency provides Congress, through the Office of Management and Budget, with an explanation of why using these standards would be inconsistent with applicable law or otherwise impractical. Voluntary consensus standards are technical standards (*e.g.*, specifications of materials, performance, design, or operation; test methods; sampling procedures; and related management systems practices) that are developed or adopted by voluntary consensus standards bodies.

This rule does not use technical standards. Therefore, we did not consider the use of voluntary consensus standards.

Environment

We have analyzed this rule under Commandant Instruction M16475.1D and Department of Homeland Security Management Directive 5100.1, which guide the Coast Guard in complying with the National Environmental Policy Act of 1969 (NEPA) (42 U.S.C. 4321–4370f), and have concluded that there are no factors in this case that would limit the use of the categorical exclusion under section 2.B.2 of the Instruction. Therefore, this rule is categorically excluded, under figure 2–1, paragraph (34)(g), of the Instruction, from further environmental documentation because this rule establishes a safety zone.

A final ''Environmental Analysis Check List'' and a final ''Categorical Exclusion Determination'' will be available in the docket where indicated under **ADDRESSES**.

List of Subjects in 33 CFR Part 165

Harbors, Marine safety, Navigation (water), Reporting and recordkeeping requirements, Security measures, Waterways.

■ For the reasons discussed in the preamble, the Coast Guard amends 33 CFR part 165 as follows:

PART 165—REGULATED NAVIGATION AREAS AND LIMITED ACCESS AREAS

■ 1. The authority citation for part 165 continues to read as follows:

Authority: 33 U.S.C. 1226 and 1231; 46 U.S.C. Chapter 701; 50 U.S.C. 191, 195; 33 CFR 1.05–1, 6.04–1, 6.04–6, and 160.5; Pub. L. 107–295, 116 Stat. 2064; Department of Homeland Security Delegation No. 0170.1.

■ 2. Add temporary § 165.T01–064 to read as follows:

§ 165.T01–064 Safety Zone: Riverfest 2007 Fireworks, Connecticut River, Hartford, CT.

(a) *Location.* The following areas are safety zones:

(1) All navigable waters of the Connecticut River in a 500-foot radius of the fireworks barge located at approximate position 41°45′39.93″ N, 072°39′49.14″ W.

(2) All navigable waters of the Connecticut River in a 500-foot radius of the fireworks barge located at approximate position 41°45′36.06″ N, 072°39′46.03″ W.

(b) *Definition.* The following definition applies to this section: *Designated on-scene patrol personnel,* means any commissioned, warrant, and petty officer of the U.S. Coast Guard operating a Coast Guard vessel who has been authorized to act on the behalf of the Captain of the Port, Long Island Sound.

(c) *Regulations.* (1) The general regulations contained in 33 CFR 165.23 apply.

(2) In accordance with the general regulations in § 165.23 of this part, entry into or movement within these zones is prohibited unless authorized by the Captain of the Port, Long Island Sound.

(3) All persons and vessels shall comply with the Coast Guard Captain of the Port, Long Island Sound or designated on-scene patrol personnel.

(4) Upon being hailed by a U.S. Coast Guard vessel by siren, radio, flashing light or other means, the operator of the vessel shall proceed as directed.

(5) Persons and vessels may request permission to enter the zone on VHF–16 or via telephone at (203) 468–4401.

(d) *Enforcement period.* This section will be enforced from 8:30 p.m. to 10:30 p.m. on Saturday, July 7, 2007. If the fireworks display is cancelled due to inclement weather, it will be enforced from 8:30 p.m. to 10:30 p.m. on Sunday, July 8, 2007.

Dated: June 5, 2007.

J.J. Plunkett,

Commander, U.S. Coast Guard, Captain of the Port, Long Island Sound, Acting.

[FR Doc. E7–11881 Filed 6–19–07; 8:45 am]

BILLING CODE 4910–15–P

DEPARTMENT OF HOMELAND SECURITY

Coast Guard

33 CFR Part 165

[CGD09–07–037]

RIN 1625–AA00

Safety Zone; Chicago Fourth of July Fireworks, Chicago Harbor, Chicago, IL

AGENCY: Coast Guard, DHS.

ACTION: Temporary final rule.

SUMMARY: The Coast Guard is establishing a temporary safety zone in Chicago Harbor, Chicago, IL. This zone is intended to restrict vessels from a portion of Chicago Harbor during the Chicago Fourth of July Fireworks display. This temporary safety zone is necessary to protect spectators and vessels from the hazards associated with fireworks displays.

DATES: This rule is effective from 8:30 p.m. on July 4, 2007 to 9:30 p.m. on July 5, 2007.

ADDRESSES: Documents indicated in this preamble as being available in the docket, are part of docket CGD09–07–037 and are available for inspection or copying at U.S. Coast Guard Sector Lake Michigan, 2420 South Lincoln Memorial Drive, Milwaukee, Wisconsin, 53207

between 8:30 a.m. and 3 p.m., Monday through Friday, except Federal holidays.

FOR FURTHER INFORMATION CONTACT: Chief Warrant Officer Brad Hinken, U.S. Coast Guard Sector Lake Michigan, Prevention Department, 2420 South Lincoln Memorial Drive, Milwaukee, Wisconsin, 53207; (414) 747–7154.

SUPPLEMENTARY INFORMATION:

Regulatory Information

We did not publish a notice of proposed rulemaking (NPRM) for this regulation. Under 5 U.S.C. 553(b)(B), the Coast Guard finds that good cause exists for not publishing an NPRM. The permit application was not received in time to publish an NPRM followed by a final rule before the effective date. Under 5 U.S.C. 553(d)(3), good cause exists for making this rule effective less than 30 days after publication in the **Federal Register**. Delaying this rule would be contrary to the public interest of ensuring the safety of spectators and vessels during this event and immediate action is necessary to prevent possible loss of life or property. The Coast Guard has not received any complaints or negative comments previously with regard to this event.

Background and Purpose

This temporary safety zone is necessary to ensure the safety of vessels and spectators from hazards associated with a fireworks display. Based on accidents that have occurred in other Captain of the Port zones, and the explosive hazards of fireworks, the Captain of the Port Lake Michigan has determined fireworks launches proximate to watercraft pose significant risk to public safety and property. The likely combination of large numbers of recreation vessels, congested waterways, darkness punctuated by bright flashes of light, alcohol use, and debris falling into the water could easily result in serious injuries or fatalities. Establishing a safety zone to control vessel movement around the location of the launch platform will help ensure the safety of persons and property at these events and help minimize the associated risks.

Discussion of Rule

A temporary safety zone is necessary to ensure the safety of spectators and vessels during the setup, loading and launching of a fireworks display in conjunction with the Chicago Fourth of July fireworks display. The fireworks display will occur between 8:30 p.m. to 9:30 p.m. on July 4, 2007 and from 8:30 p.m. to 9:30 p.m. on July 5, 2007.

The safety zone for the fireworks will encompass all waters of Chicago Harbor and Lake Michigan within a 1000-foot radius from the fireworks launch site located on a barge in position 41°52′41″ N, 087°36′37″ W (NAD 83). The size of this zone was determined using the National Fire Prevention Association guidelines and local knowledge of wind and currents.

All persons and vessels shall comply with the instructions of the Coast Guard Captain of the Port or the designated on-scene representative. Entry into, transiting, or anchoring within the safety zone is prohibited unless authorized by the Captain of the Port Lake Michigan or his on-scene representative. The Captain of the Port or his designated on-scene representative may be contacted via VHF Channel 16.

Regulatory Evaluation

This rule is not a ''significant regulatory action'' under section 3(f) of Executive Order 12866, Regulatory Planning and Review, and does not require an assessment of potential costs and benefits under section 6(a)(3) of that Order. The Office of Management and Budget has not reviewed it under that Order.

We expect the economic impact of this proposed rule to be so minimal that a full Regulatory Evaluation is unnecessary.

This determination is based on the minimal time that vessels will be restricted from the zone and the zone is an area where the Coast Guard expects insignificant adverse impact to mariners from the zones' activation.

Small Entities

Under the Regulatory Flexibility Act (5 U.S.C. 601–612), we have considered whether this rule would have a significant economic impact on a substantial number of small entities. The term ''small entities'' comprises small businesses, not-for-profit organizations that are independently owned and operated and are not dominant in their fields, and governmental jurisdictions with populations of less than 50,000.

The Coast Guard certifies under 5 U.S.C. 605(b) that this rule will not have a significant economic impact on a substantial number of small entities.

This rule will affect the following entities, some of which may be small entities: The owners and operators of vessels intending to transit or anchor in a portion of Chicago Harbor from 8:30 p.m. to 9:30 p.m. on July 4, 2007 and from 8:30 p.m. to 9:30 p.m. on July 5, 2007.

This safety zone will not have a significant economic impact on a substantial number of small entities for the following reasons: This rule will be in effect for only one hour for two events. Vessel traffic can safely pass outside the safety zone during the event. In the event that this temporary safety zone affects shipping, commercial vessels may request permission from the Captain of the Port Lake Michigan to transit through the safety zone. The Coast Guard will give notice to the public via a Broadcast to Mariners that the regulation is in effect.

Assistance for Small Entities

Under section 213(a) of the Small Business Regulatory Enforcement Fairness Act of 1996 (Pub. L. 104–121), we offered to assist small entities in understanding the rule so that they could better evaluate its effects on them and participate in the rulemaking process. Small businesses may send comments on the actions of Federal employees who enforce, or otherwise determine compliance with, Federal regulations to the Small Business and Agriculture Regulatory Enforcement Ombudsman and the Regional Small Business Regulatory Fairness Boards. The Ombudsman evaluates these actions annually and rates each agency's responsiveness to small business. If you wish to comment on actions by employees of the Coast Guard, call 1–888–REG–FAIR (1–888–734–3247).

Collection of Information

This rule calls for no new collection of information under the Paperwork Reduction Act of 1995 (44 U.S.C. 3501–3520).

Federalism

A rule has implications for federalism under Executive Order 13132, Federalism, if it has substantial direct effect on State or local governments and would either preempt State law or impose a substantial direct cost of compliance on them. We have analyzed this rule under that Order and have determined that it does not have implications for federalism.

Unfunded Mandates Reform Act

The Unfunded Mandates Reform Act of 1995 (2 U.S.C. 1531–1538) requires Federal agencies to assess the effects of their discretionary regulatory actions. In particular, the Act addresses actions that may result in the expenditure by a State, local, or tribal government, in the aggregate, or by the private sector of $100,000,000 or more in any one year. Though this rule would not result in such expenditure, we do discuss the effects of this rule elsewhere in this preamble.

Taking of Private Property

This rule will not effect a taking of private property or otherwise have taking implications under Executive Order 12630, Governmental Actions and Interference with Constitutionally Protected Property Rights.

Civil Justice Reform

This rule meets applicable standards in sections 3(a) and 3(b)(2) of Executive Order 12988, Civil Justice Reform, to minimize litigation, eliminate ambiguity, and reduce burden.

Protection of Children

We have analyzed this rule under Executive Order 13045, Protection of Children from Environmental Health Risks and Safety Risks. This rule is not an economically significant rule and does not concern an environmental risk to health or risk to safety that may disproportionately affect children.

Indian Tribal Governments

The Coast Guard recognizes the treaty rights of Native American Tribes. Moreover, the Coast Guard is committed to working with Tribal Governments to implement local policies and to mitigate tribal concerns. We have determined that these special local regulations and fishing rights protection need not be incompatible. We have also determined that this Rule does not have tribal implications under Executive Order 13175, Consultation and Coordination with Indian Tribal Governments, because it does not have a substantial direct effect on one or more Indian tribes, on the relationship between the Federal Government and Indian tribes, or on the distribution of power and responsibilities between the Federal Government and Indian tribes. Nevertheless, Indian Tribes that have questions concerning the provisions of this Proposed Rule or options for compliance are encouraged to contact the point of contact listed under **FOR FURTHER INFORMATION CONTACT**.

Energy Effects

We have analyzed this rule under Executive order 13211, Actions Concerning Regulations that Significantly Affect Energy Supply, Distribution, or Use. We have determined that it is not a ''significant energy action'' under that order because it is not a ''significant regulatory action'' under Executive Order 12866 and is not likely to have a significant adverse effect on the supply, distribution, or use of energy. The Administrator of the office of Information and Regulatory Affairs has not designated it as a significant energy action. Therefore, it does not require a statement of Energy Effects under Executive Order 13211.

Technical Standards

The National Technology Transfer and Advancement Act (NTTAA) (15 U.S.C. 272 note) directs agencies to use voluntary consensus standards in their regulatory activities unless the agency provides Congress, through the Office of Management and Budget, with an explanation of why using these standards would be inconsistent with applicable law or otherwise impractical. Voluntary consensus standards are technical standards (*e.g.*, specifications of materials, performance, design, or operation; test methods; sampling procedure; and related management system practices) that are developed or adopted by voluntary consensus standards bodies.

This rule does not use technical standards. Therefore, we did not consider the use of voluntary consensus standards.

Environment

We have analyzed this rule under Commandant Instruction M16475.lD, which guides the Coast Guard in complying with the National Environmental Policy Act of 1969 (NEPA) (42 U.S.C. 4321–4370f), and have concluded that there are no factors in this case that would limit the use of a categorical exclusion under section 2.B.2 of the Instruction. Therefore, this rule is categorically excluded, under figure 2–1, paragraph (34)(g), of the Instruction, from further environmental documentation. This event establishes a safety zone therefore paragraph (34)(g) of the Instruction applies.

A final ''Environmental Analysis Check List'' and a final ''Categorical Exclusion Determination'' are available in the docket where indicated under **ADDRESSES**.

List of Subjects in 33 CFR Part 165

Harbors, Marine safety, Navigation (water), Reporting and record keeping requirements, Security measures, Waterways.

■ For the reasons discussed in the preamble, the Coast Guard amends 33 CFR part 165 as follows:

PART 165—REGULATED NAVIGATION AREAS AND LIMITED ACCESS AREAS

■ 1. The authority citation for part 165 continues to read as follows:

Authority: 33 U.S.C. 1226, 1231; 46 U.S.C. Chapter 701; 50 U.S.C. 191, 195; 33 CFR 1.05–1, 6.04–1, 6.04–6, and 160.5; Pub. L. 107–295, 116 Stat. 2064; Department of Homeland Security Delegation No. 0170.1.

■ 2. A new temporary § 165.T09–037 is added as follows:

§ 165.T09–037 Safety zone; Chicago Fourth of July Fireworks, Chicago Harbor, Chicago, IL.

(a) *Location.* The following area is a temporary safety zone: All waters of Chicago Harbor and Lake Michigan within a 1000-foot radius from the fireworks launch site located on a barge in position 41°52′41″ N, 087°36′37″ W (NAD 83).

(b) *Effective period.* This regulation is effective from 8:30 p.m. on July 4, 2007 to 9:30 p.m. on July 5, 2007. This regulation will be enforced from 8:30 p.m. to 9:30 p.m. on July 4, 2007 and from 8:30 p.m. to 9:30 p.m. on July 5, 2007.

(c) *Regulations.*

(1) In accordance with the general regulations in section 165.23 of this part, entry into, transiting, or anchoring within this safety zone is prohibited unless authorized by the Captain of the Port Lake Michigan, or his on-scene representative.

(2) This safety zone is closed to all vessel traffic, except as may be permitted by the Captain of the Port Lake Michigan or his on-scene representative.

(3) The ''on-scene representative'' of the Captain of the Port is any Coast Guard commissioned, warrant or petty officer who has been designated by the Captain of the Port to act on his behalf. The on-scene representative of the Captain of the Port will be aboard either a Coast Guard or Coast Guard Auxiliary vessel. The Captain of the Port or his on-scene representative may be contacted via VHF Channel 16.

(4) Vessel operators desiring to enter or operate within the safety zone shall contact the Captain of the Port Lake Michigan or his on-scene representative to obtain permission to do so. Vessel operators given permission to enter or operate in the safety zone must comply with all directions given to them by the Captain of the Port Lake Michigan or his on-scene representative.

Dated: June 12, 2007.

Bruce C. Jones,

Captain, U.S. Coast Guard, Captain of the Port Lake Michigan.

[FR Doc. E7–11882 Filed 6–19–07; 8:45 am]

BILLING CODE 4910–15–P

DEPARTMENT OF HOMELAND SECURITY

Coast Guard

33 CFR Part 165

[CGD13–07–017]

RIN 1625–AA00

Safety Zones: Fireworks Displays in the Captain of the Port Puget Sound Zone

AGENCY: Coast Guard, DHS.

ACTION: Temporary final rule.

SUMMARY: The Coast Guard is establishing temporary safety zones on the waters of the Puget Sound, Lake Washington, and Lake Union, located in the Captain of the Port Puget Sound Zone, during several fireworks displays. This action is necessary to provide for the safety of life during these displays. Entry into these safety zones is prohibited unless authorized by the Captain of the Port or his designated representative.

DATES: This regulation is effective from June 30, 2007 through August 26, 2007.

ADDRESSES: Documents indicated in this preamble as being available in the docket are part of docket (CGD13–07–017) and are available for inspection or copying at the U.S. Coast Guard Sector Seattle, 1519 Alaskan Way South, Seattle, Washington 98134 between 8 a.m. and 4 p.m., Monday through Friday, except Federal holidays.

FOR FURTHER INFORMATION CONTACT: Petty Officer Stephen Knappe, c/o Captain of the Port, U.S. Coast Guard Sector Seattle, 1519 Alaskan Way South, Seattle, Washington 98134, (206) 217–6051.

SUPPLEMENTARY INFORMATION:

Regulatory Information

We did not publish a notice of proposed rulemaking (NPRM) for this regulation. Under 5 U.S.C. 553(b)(B) and 5 U.S.C. 553(d)(3), the Coast Guard finds that good cause exists for not publishing an NPRM and for making this rule effective less than 30 days after publication in the **Federal Register**. Publishing an NPRM would be contrary to public interest since immediate action is necessary to ensure the safety of vessels and spectators gathering in the vicinity of the various fireworks launching barges and displays. If normal notice and comment procedures were followed, this rule would not become effective until after the dates of the events. For this reason, following normal rulemaking procedures in this case would be impracticable and contrary to the public interest.

Background and Purpose

The Coast Guard is establishing temporary safety zones to allow for safe fireworks displays. All events occur within the Captain of the Port, Puget Sound, WA, Area of Responsibility (AOR). These events may result in a number of vessels congregating near fireworks launching barges and sites. The safety zones are needed to protect watercraft and their occupants from safety hazards associated with fireworks displays. These safety zones will be enforced by representatives of the Captain of the Port, Puget Sound, Washington. The Captain of the Port may be assisted by other federal and local agencies.

Discussion of Rule

Temporary safety zones are necessary to ensure the safety of spectators and vessels during several fireworks displays occurring between June 30 and August 25, 2007. Entry into these zones is prohibited unless authorized by the Captain of the Port, Puget Sound or his designated representative. The Captain of the Port, Puget Sound, Washington, will enforce these safety zones. The Captain of the Port may be assisted by other federal and local agencies.

Regulatory Evaluation

This rule is not a ''significant regulatory action'' under section 3(f) of Executive Order 12866, Regulatory Planning and Review, and does not require an assessment of potential costs and benefits under section 6(a)(3) of that Order. The Office of Management and Budget has not reviewed this rule under that Order.

This rule is not significant because the safety zones will encompass small portions of Puget Sound, Lake Washington, and Lake Union in the Puget Sound Captain of the Port's AOR on different dates, and all will be effective in the evening when vessel traffic volume is low.

Small Entities

Under the Regulatory Flexibility Act (5 U.S.C. 601–612), we have considered whether this rule would have a significant economic impact on a substantial number of small entities. The term ''small entities'' comprises small businesses, not-for-profit organizations that are independently owned and operated and are not dominant in their fields, and governmental jurisdictions with populations of less than 50,000.

This Coast Guard certifies under 5 U.S.C. 605(b) that this rule will not have a significant economic impact on a substantial number of small entities.

This rule will affect the following entities, some of which may be small entities: The owners or operators of vessels intending to transit a portion of the Puget Sound, Lake Washington, or Lake Union during the times in section 2(a) of this rule. These safety zones will not have significant economic impact on a substantial number of small entities for the following reasons. Each safety zone will be in effect for no more than 2.5 hours when vessel traffic volume is low. Traffic will be allowed to pass through each zone with the permission of the Captain of the Port or his designated representatives.

Assistance for Small Entities

Under section 213(a) of the Small Business Regulatory Enforcement Fairness Act of 1996 (Pub. L. 104–121), we want to assist small entities in understanding the rule so that they can better evaluate its effects on them and participate in the rulemaking process. Small businesses may send comments on the actions of Federal employees who enforce, or otherwise determine compliance with Federal regulations to the Small Business and Agriculture Regulatory Enforcement Ombudsman and the Regional Small Business Regulatory Fairness Boards. The Ombudsman evaluates these actions annually and rates each agency's responsiveness to small business. If you wish to comment on actions by employees of the Coast Guard, call 1–888–REG–FAIR (1–888–734–3247). The Coast Guard will not retaliate against small entities that question or complain about this rule or any policy or action of the Coast Guard.

Collection of Information

This rule calls for no new collection of information under the Paperwork Reduction Act of 1995 (44 U.S.C. 3501–3520).

Federalism

A rule has implications for federalism under Executive Order 13132, Federalism, if it has a substantial direct effect on State or local governments and would either preempt State law or impose a substantial direct cost of compliance on them. We have analyzed this rule under that Order and have determined that it does not have implications for federalism.

Unfunded Mandates Reform Act

The Unfunded Mandates Reform Act of 1995 (2 U.S.C. 1531–1538) requires

Federal agencies to assess the effects of their discretionary regulatory actions. In particular, the Act addresses actions that may result in the expenditure by a State, local, or tribal government, in the aggregate, or the private sector of $100,000,000 or more in any one year. Though this rule will not result in such an expenditure, we do discuss the effects of this rule elsewhere in this preamble.

Taking of Private Property

This rule will not affect a taking of private property or otherwise have taking implications under Executive Order 12630, Governmental Actions and Interference with Constitutionally Protected Property Rights.

Civil Justice Reform

This rule meets applicable standards in sections 3(a) and 3(b) (2) of Executive Order 12988, Civil Justice Reform, to minimize litigation, eliminate ambiguity, and reduce burden.

Protection of Children

We have analyzed this rule under Executive Order 13045, Protection of Children from Environmental Health Risks and Safety Risks. This rule is not an economically significant rule and does not create an environmental risk to health or risk to safety that may disproportionately affect children.

Indian Tribal Governments

This rule does not have tribal implications under Executive Order 13175, Consultation and Coordination with Indian tribal governments, because it does not have a substantial direct effect on one or more Indian tribes, on the relationship between the federal government and Indian tribes, or on the distribution of power and responsibilities between the Federal government and Indian tribes.

Energy Effects

We have analyzed this rule under Executive Order 13211, Actions Concerning Regulations That Significantly Affect Energy Supply, Distribution, or Use. We have determined that it is not a ''significant energy action'' under that order because it is not a ''significant regulatory action'' under Executive Order 12866 and is not likely to have a significant adverse effect on the supply, distribution, or use of energy. It has not been designated by the Administrator of the Office of Information and Regulatory Affairs as a significant energy action. Therefore, it does not require a Statement of Energy Effects under Executive Order 13211.

Technical Standards

The National Technology Transfer and Advancement Act (NTTAA) (15 U.S.C. 272 note) directs agencies to use voluntary consensus standards in their regulatory activities unless the agency provides Congress, through the Office of Management and Budget, with an explanation of why using these standards would be inconsistent with applicable law or otherwise impractical. Voluntary consensus standards are technical standards (*e.g.*, specifications of materials, performance, design, or operation; test methods; sampling procedures; and related management systems practices) that are developed or adopted by voluntary consensus standards bodies.

This rule does not use technical standards. Therefore, we did not consider the use of voluntary consensus standards.

Environment

We have analyzed this rule under Commandant Instruction M16475.1D and Department of Homeland Security Management Directive 5100.1, which guide the Coast Guard in complying with the National Environmental Policy Act of 1969 (NEPA) (42 U.S.C. 4321–4370f), and have concluded that there are no factors in this case that would limit the use of a categorical exclusion under section 2.B.2 of the Instruction. Therefore, this rule is categorically excluded, under figure 2–1, paragraph (34)(g), of the Instruction, from further environmental documentation. Paragraph 34(g) is applicable because this rule establishes safety zones. A final ''Environmental Analysis Check List'' and a final ''Categorical Exclusion Determination'' are available in the docket where indicated under **ADDRESSES**.

List of Subjects in 33 CFR Part 165

Harbors, Marine safety, Navigation (water), Reporting and recordkeeping requirements, Security measures, Waterways.

■ For the reasons discussed in the preamble, the Coast Guard amends 33 CFR part 165 as follows:

PART 165—REGULATED NAVIGATION AREAS AND LIMITED ACCESS AREAS

■ 1. The authority citation for part 165 continues to read as follows:

Authority: 33 U.S.C. 1226, 1231; 46 U.S.C Chapter 701; 50 U.S.C. 191, 195; 33 CFR 1.05–1, 6.04–1, 6.04–6 and 160.5; Pub. L. 107–295, 116 Stat. 2064; Department of Homeland Security Delegation No. 0170.1.

■ 2. Add temporary § 165.T13–012 to read as follows:

§ 165.T13–012 Safety Zones: Fireworks Displays in the Captain of the Port Puget Sound Zone.

(a) *Safety Zones.* The following areas are safety zones:

(1) *Langlie's Old Fashioned Independence Celebration Fireworks Safety Zone, Port Madison, WA*

(i) *Location.* All waters of Port Madison, from surface to bottom, extending out to a 500 foot radius from the launch site at 47°44′49″ N, 122°31′32″ W.

(ii) *Effective time and date.* 9:30 p.m. to 10:30 p.m. on June 30, 2007.

(2) *Boston Harbor 4th of July Celebration Fireworks Safety Zone, Boston Harbor, WA:*

(i) *Location.* All waters of Budd Inlet, from surface to bottom, extending out to a 400 foot radius from the launch site at 47°08′31″ N, 122°54′20″ W.

(ii) *Effective time and date.* 10 p.m. to 11 p.m. on July 3, 2007.

(3) *Deer Harbor Annual Fireworks Display Safety Zone, Deer Harbor, WA:*

(i) *Location.* All waters of Deer Harbor, from surface to bottom, extending out to a 500 foot radius from the launch site at 48°37′10″ N, 123°00′15″ W.

(ii) *Effective time and date.* 10 p.m. to 11 p.m. on July 3, 2007.

(4) *Poulsbo 3rd of July Fireworks Display Safety Zone, Poulsbo, WA:*

(i) *Location.* All waters of Liberty Bay, from surface to bottom, extending out to a 400 foot radius from the launch site at 47°44′00″ N, 122°39′15″ W.

(ii) *Effective time and date.* 10 p.m. to 11 p.m. on July 3, 2007.

(5) *Olele Point Patriotic Celebration Fireworks Safety Zone, Port Ludlow, WA:*

(i) *Location.* All waters of Liberty Bay, from surface to bottom, extending out to a 400 foot radius from the launch site at 47°58′30″ N, 122°41′30″ W.

(ii) *Effective time and date.* 9 p.m. to 10:30 p.m. on July 4, 2007.

(6) *Kingston Fireworks Display Safety Zone, Kingston, WA:*

(i) *Location.* All waters of Appletree Cove, from surface to bottom, extending out to a 400 foot radius from the launch site at 47°47′25″ N, 122°29′55″ W.

(ii) *Effective time and date.* 10 p.m. to 11 p.m. on July 4, 2007.

(7) *Des Moines 4th of July, Des Moines, WA:*

(i) *Location.* All waters of East Passage, from surface to bottom, extending out to a 400 foot radius from the launch site at 47°24′10″ N, 122°20′05″ W.

(ii) *Effective time and date.* 10 p.m. to 11 p.m. on July 4, 2007.

(8) *Steilacoom Annual 4th of July Fireworks Safety Zone, Steilacoom, WA:*

(i) *Location.* All waters of Steilacoom Bay, from surface to bottom, extending out to a 1300 foot radius from the launch site at 47°10′24″ N, 122°36′12″ W.

(ii) *Effective time and date.* 8 p.m. to 10:30 p.m. on July 4, 2007.

(9) *4th of July Fireworks Show Safety Zone, Everett, WA:*

(i) *Location.* All waters of Possession Sound, from surface to bottom, extending out to a 1000 foot radius from the launch site at 47°59′00″ N, 122°14′35″ W.

(ii) *Effective time and date.* 10 p.m. to 11 p.m. on July 4, 2007.

(10) *Everett 4th of July Celebration Fireworks Safety Zone, Everett, WA:*

(i) *Location.* All waters of Port Gardner, from surface to bottom, extending out to a 1300 foot radius from the launch site at 47°59′56″ N, 122°14′22″ W.

(ii) *Effective time and date.* 10 p.m. to 11 p.m. on July 4, 2007.

(11) *Henderson Bay Fireworks Display Safety Zone, Gig Harbor, WA:*

(i) *Location.* All waters of Carr Inlet, from surface to bottom, extending out to a 700 foot radius from the launch site at 47°21′48″ N, 122°38′22″ W.

(ii) *Effective time and date.* 10 p.m. to 11 p.m. on July 4, 2007.

(12) *Vashon Island, Quartermaster Harbor Fireworks Safety Zone, WA:*

(i) *Location.* All waters of Quartermaster Harbor, from surface to bottom, extending out to a 1300 foot radius from the launch site at 47°24′00″ N, 122°27′00″ W.

(ii) *Effective time and date.* 10 p.m. to 11 p.m. on July 4, 2007.

(13) *Renton 4th of July Display Fireworks Safety Zone, Renton, WA:*

(i) *Location.* All waters of Lake Washington, from surface to bottom, extending out to a 400 foot radius from the launch site at 47°30′25″ N, 122°12′25″ W.

(ii) *Effective time and date.* 10 p.m. to 11 p.m. on July 4, 2007.

(14) *Three Tree Point Fireworks Safety Zone, Burien, WA:*

(i) *Location.* All waters of East Passage, from surface to bottom, extending out to a 400 foot radius from the launch site at 47°27′02″ N, 122°23′07″ W.

(ii) *Effective time and date.* 10 p.m. to 11 p.m. on July 4, 2007.

(15) *Yarrow Point 4th of July Fireworks Safety Zone, Yarrow Point, WA:*

(i) *Location.* All waters of Lake Washington, from surface to bottom, extending out to a 400 foot radius from the launch site at 47°39′45″ N, 122°13′30″ W.

(ii) *Effective time and date.* 10 p.m. to 11 p.m. on July 4, 2007.

(16) *WAMU Family 4th Fireworks Safety Zone, Seattle, WA:*

(i) *Location.* All waters of Lake Union, from surface to bottom, extending out to a 1000 foot radius from the launch site at 47°38′24″ N, 122°20′05″ W.

(ii) *Effective time and date.* 10 p.m. to 11 p.m. on July 4, 2007.

(17) *Haggens 4th July Blast Over Bellingham Bay Fireworks Safety Zone, Bellingham, WA:*

(i) *Location.* All waters of Bellingham Bay, from surface to bottom, extending out to a 1300 foot radius from the launch site at 48°44′58″ N, 122°29′34″ W.

(ii) *Effective time and date.* 10 p.m. to 11 p.m. on July 4, 2007.

(18) *Port Orchard 4th of July Fireworks Safety Zone, Port Orchard, WA:*

(i) *Location.* All waters of Port Orchard, from surface to bottom, extending out to a 1000 foot radius from the launch site at 48°32′53″ N, 122°37′55″ W.

(ii) *Effective time and date.* 9 p.m. to 11 p.m. on July 4, 2007.

(19) *Kirkland 4th of July Fireworks Safety Zone, Kirkland, WA:*

(i) *Location.* All waters of Lake Washington, from surface to bottom, extending out to a 700 foot radius from the launch site at 47°40′19″ N, 122°12′47″ W.

(ii) *Effective time and date.* 10 p.m. to 11 p.m. on July 4, 2007.

(20) *Lake Forest Park July 4th Fireworks Safety Zone, Lake Forest, WA:*

(i) *Location.* All waters of Lake Washington, from surface to bottom, extending out to a 400 foot radius from the launch site at 47°45′07″ N, 122°16′22″ W.

(ii) *Effective time and date.* 10 p.m. to 11 p.m. on July 4, 2007.

(21) *Mercer Island Summer Celebration Fireworks Safety Zone, Mercer Island, WA:*

(i) *Location.* All waters of Lake Washington, from surface to bottom, extending out to a 700 foot radius from the launch site at 47°35′31″ N, 122°13′14″ W.

(ii) *Effective time and date.* 10 p.m. to 11 p.m. on July 14, 2007.

(22) *Whaling Days Fireworks Safety Zone, Silverdale, WA:*

(i) *Location.* All waters of Dyes Inlet, from surface to bottom, extending out to a 800 foot radius from the launch site at 47°38′36″ N, 122°41′18″ W.

(ii) *Effective time and date.* 9 p.m. to 11 p.m. on July 27, 2007.

(23) *Barghausens Annual Fireworks Display Safety Zone, Olympia, WA:*

(i) *Location.* All waters of Case Inlet, from surface to bottom, extending out to a 1300 foot radius from the launch site at 47°11′20″ N, 122°50′00″ W.

(ii) *Effective time and date.* 9 p.m. to 11 p.m. on August 3, 2007.

(24) *Medina Days Fireworks Safety Zone, Medina, WA:*

(i) *Location.* All waters of Lake Washington, from surface to bottom, extending out to a 400 foot radius from the launch site at 47°36′53″ N, 122°14′93″ W.

(ii) *Effective time and date.* 10 p.m. to 11 p.m. on August 11, 2007.

(25) *ESAM Surprise Party Fireworks Safety Zone, Seattle, WA:*

(i) *Location.* All waters of Lake Washington, from surface to bottom, extending out to a 500 foot radius from the launch site at 47°38′37″ N, 122°20′08″ W.

(ii) *Effective time and date.* 10 p.m. to 11 p.m. on August 11, 2007.

(26) *Town and Country Markets Fireworks Safety Zone, Bainbridge, WA:*

(i) *Location.* All waters of Eagle Harbor, from surface to bottom, extending out to a 1300 foot radius from the launch site at 47°37′06″ N, 122°30′24″ W.

(ii) *Effective time and date.* 9 p.m. to 11 p.m. on August 25, 2007.

(b) *Definitions. Designated representative* means a Coast Guard Patrol Commander, including a Coast Guard coxswain, petty officer, or other officer operating a Coast Guard vessel and a Federal, State, and local officer designated by or assisting the Captain of the Port.

(c) *Regulations.* In accordance with the general regulations in Section 165.23 of this part, no person or vessel may enter or remain in this zone unless authorized by the Captain of the Port or his designated representatives.

Dated: June 5, 2007.

Mark J. Huebschman,

Commander, U.S. Coast Guard, Acting Captain of the Port, Puget Sound, WA.

[FR Doc. E7–11951 Filed 6–19–07; 8:45 am]

BILLING CODE 4910–15–P

ENVIRONMENTAL PROTECTION AGENCY

40 CFR Part 180

[EPA–HQ–OPP–2006–0178; FRL–8132–9]

Lactofen; Pesticide Tolerance

AGENCY: Environmental Protection Agency (EPA).

ACTION: Final rule.

SUMMARY: This regulation establishes a regional tolerance for residues of lactofen in or on vegetables, fruiting, group 08, and okra. Interregional Research Group Number 4 (IR–4)

requested this tolerance under the Federal Food, Drug, and Cosmetic Act (FFDCA).

DATES: This regulation is effective June 20, 2007. Objections and requests for hearings must be received on or before August 20, 2007, and must be filed in accordance with the instructions provided in 40 CFR part 178 (see also Unit I.C. of the **SUPPLEMENTARY INFORMATION**).

ADDRESSES: EPA has established a docket for this action under docket identification (ID) number EPA–HQ–OPP–2006–0178. To access the electronic docket, go to *http://www.regulations.gov*, select ''Advanced Search,'' then ''Docket Search.'' Insert the docket ID number where indicated and select the ''Submit'' button. Follow the instructions on the regulations.gov web site to view the docket index or access available documents. All documents in the docket are listed in the docket index available in regulations.gov. Although listed in the index, some information is not publicly available, e.g., Confidential Business Information (CBI) or other information whose disclosure is restricted by statute. Certain other material, such as copyrighted material, is not placed on the Internet and will be publicly available only in hard copy form. Publicly available docket materials are available in the electronic docket at *http://www.regulations.gov*, or, if only available in hard copy, at the OPP Regulatory Public Docket in Rm. S–4400, One Potomac Yard (South Bldg.), 2777 S. Crystal Dr., Arlington, VA. The Docket Facility is open from 8:30 a.m. to 4 p.m., Monday through Friday, excluding legal holidays. The Docket Facility telephone number is (703) 305–5805.

FOR FURTHER INFORMATION CONTACT: Sidney Jackson, Registration Division (7505P), Office of Pesticide Programs, Environmental Protection Agency, 1200 Pennsylvania Ave., NW., Washington, DC 20460–0001; telephone number: (703) 305–7610; e-mail address: *jackson.sidney@epa.gov*.

SUPPLEMENTARY INFORMATION:

I. General Information

A. Does this Action Apply to Me?

You may be potentially affected by this action if you are an agricultural producer, food manufacturer, or pesticide manufacturer. Potentially affected entities may include, but are not limited to those engaged in the following activities:

- Crop production (NAICS code 111), e.g., agricultural workers; greenhouse, nursery, and floriculture workers; farmers.
- Animal production (NAICS code 112), e.g., cattle ranchers and farmers, dairy cattle farmers, livestock farmers.
- Food manufacturing (NAICS code 311), e.g., agricultural workers; farmers; greenhouse, nursery, and floriculture workers; ranchers; pesticide applicators.
- Pesticide manufacturing (NAICS code 32532), e.g., agricultural workers; commercial applicators; farmers; greenhouse, nursery, and floriculture workers; residential users.

This listing is not intended to be exhaustive, but rather to provide a guide for readers regarding entities likely to be affected by this action. Other types of entities not listed in this unit could also be affected. The North American Industrial Classification System (NAICS) codes have been provided to assist you and others in determining whether this action might apply to certain entities. If you have any questions regarding the applicability of this action to a particular entity, consult the person listed under **FOR FURTHER INFORMATION CONTACT**.

B. How Can I Access Electronic Copies of this Document?

In addition to accessing an electronic copy of this **Federal Register** document through the electronic docket at *http://www.regulations.gov*, you may access this **Federal Register** document electronically through the EPA Internet under the ''**Federal Register**'' listings at *http://www.epa.gov/fedrgstr*. You may also access a frequently updated electronic version of EPA's tolerance regulations at 40 CFR part 180 through the Government Printing Office's pilot e–CFR site at *http://www.gpoaccess.gov/ecfr*.

C. Can I File an Objection or Hearing Request?

Under section 408(g) of the FFDCA, any person may file an objection to any aspect of this regulation and may also request a hearing on those objections. You must file your objection or request a hearing on this regulation in accordance with the instructions provided in 40 CFR part 178. To ensure proper receipt by EPA, you must identify docket ID number EPA–HQ–OPP–2006–0178 in the subject line on the first page of your submission. All requests must be in writing, and must be mailed or delivered to the Hearing Clerk as required by 40 CFR part 178 on or before August 20, 2007.

In addition to filing an objection or hearing request with the Hearing Clerk as described in 40 CFR part 178, please submit a copy of the filing that does not contain any CBI for inclusion in the public docket that is described in **ADDRESSES**. Information not marked confidential pursuant to 40 CFR part 2 may be disclosed publicly by EPA without prior notice. Submit this copy, identified by docket ID number EPA–HQ–OPP–2006–0178, by one of the following methods:

- *Federal eRulemaking Portal: http://www.regulations.gov*. Follow the on-line instructions for submitting comments.
- *Mail*: Office of Pesticide Programs (OPP) Regulatory Public Docket (7502P), Environmental Protection Agency, 1200 Pennsylvania Ave., NW., Washington, DC 20460–0001.
- *Delivery*: OPP Regulatory Public Docket (7502P), Environmental Protection Agency, Rm. S–4400, One Potomac Yard (South Bldg.), 2777 S. Crystal Dr., Arlington, VA. Deliveries are only accepted during the Docket's normal hours of operation (8:30 a.m. to 4 p.m., Monday through Friday, excluding legal holidays). Special arrangements should be made for deliveries of boxed information. The Docket Facility telephone number is (703) 305–5805.

II. Petition for Tolerance

In the **Federal Register** of April 12, 2006 (71 FR 18744) (FRL–7773–3), EPA issued a notice pursuant to section 408(d)(3) of FFDCA, 21 U.S.C. 346a(d)(3), announcing the filing of a pesticide petition (PP 5E6930) by IR–4, 500 College Road East, Suite 201 W, Princeton, NJ 08540. The petition requested that 40 CFR 180.432 be amended by establishing a tolerance for residues of the herbicide, lactofen, (1-(carboethoxy) ethyl 5-2-chloro-4-(trifluoromethyl) phenoxy-2-nitrobenzoate), in or on vegetable, fruiting, and okra at 0.01 parts per million (ppm). That notice referenced a summary of the petition prepared by Valent U.S.A. Corporation, the registrant, which is available to the public in the docket, *http://www.regulations.gov*. There were no comments received in response to the notice of filing.

III. Aggregate Risk Assessment and Determination of Safety

Section 408(b)(2)(A)(i) of the FFDCA allows EPA to establish a tolerance (the legal limit for a pesticide chemical residue in or on a food) only if EPA determines that the tolerance is ''safe.'' Section 408(b)(2)(A)(ii) of the FFDCA defines ''safe'' to mean that ''there is a reasonable certainty that no harm will result from aggregate exposure to the pesticide chemical residue, including all anticipated dietary exposures and all

other exposures for which there is reliable information.'' This includes exposure through drinking water and in residential settings, but does not include occupational exposure. Section 408(b)(2)(C) of the FFDCA requires EPA to give special consideration to exposure of infants and children to the pesticide chemical residue in establishing a tolerance and to ''ensure that there is a reasonable certainty that no harm will result to infants and children from aggregate exposure to the pesticide chemical residue. . . .'' These provisions were added to the FFDCA by the Food Quality Protection Act (FQPA) of 1996.

Consistent with section 408(b)(2)(D) of the FFDCA, and the factors specified in section 408(b)(2)(D) of the FFDCA, EPA has reviewed the available scientific data and other relevant information in support of this action. EPA has sufficient data to assess the hazards of and to make a determination on aggregate exposure for the petitioned for tolerance for residues of lactofen in/on vegetables, fruiting, group 08, at 0.02 ppm and okra at 0.02 ppm . EPA's assessment of exposures and risks associated with establishing the tolerance follows.

A. Toxicological Profile

EPA has evaluated the available toxicity data and considered their validity, completeness, and reliability as well as the relationship of the results of the studies to human risk. EPA has also considered available information concerning the variability of the sensitivities of major identifiable subgroups of consumers, including infants and children. Specific information on the studies received and the nature of the adverse effects caused by lactofen as well as the no-observed-adverse-effect-level (NOAEL) and the lowest-observed-adverse-effect-level (LOAEL) from the toxicity studies are discussed in support documents to this action under Docket ID number EPA–HQ–OPP–2006–0178.

B. Toxicological Endpoints

For hazards that have a threshold below which there is no appreciable risk, the toxicological level of concern (LOC) is derived from the highest dose at which NOAEL in the toxicology study identified as appropriate for use in risk assessment. However, if a NOAEL cannot be determined, the LOAEL doseof concern are identified is sometimes used for risk assessment. Uncertainty/safety factors (UF) are used in conjunction with the LOC to take into account uncertainties inherent in the extrapolation from laboratory animal data to humans and in the variations in sensitivity among members of the human population as well as other unknowns. Safety is assessed for acute and chronic risks by comparing aggregate exposure to the pesticide to the acute population adjusted dose (aPAD) and chronic population adjusted dose (cPAD). The aPAD and cPAD are calculated by dividing the LOC by all applicable uncertainty/safety factors. Short-term, intermediate-term, and long-term risks are evaluated by comparing aggregate exposure to the LOC to ensure that the margin of exposure (MOE) called for by the product of all applicable uncertainty/safety factors is not exceeded.

For non-threshold risks, the Agency assumes that any amount of exposure will lead to some degree of risk and estimates risk in terms of the probability of occurrence of additional adverse cases. Generally, cancer risks are considered non-threshold. For more information on the general principles EPA uses in risk characterization and a complete description of the risk assessment process, see *http://www.epa.gov/fedrgstr/EPA-PEST/1997/November/Day-26/p30948.htm*.

A summary of the toxicological endpoints for lactofen used for human risk assessment can be found at www.regulations.gov in document ''Lactofen: Human Health Risk Assessment for Proposed Uses of Fruiting Vegetables and Okra'' at page number 13 in docket ID number EPA–HQ–OPP–2006–0178. To locate this information on the Regulation.gov website follow these steps:

- Select ''Advanced Search'', then ''Docket Search.''
- In the ''Docket ID number'' field type the docket number in the following format - ''OPP-year-docket number'' e.g., OPP-2005–9999).
- Click the ''Submit'' button.
- Click on the docket to open.

C. Exposure Assessment

1. *Dietary exposure from food and feed uses*. In evaluating dietary exposure to lactofen, EPA considered exposure under the petitioned-for tolerances as well as all existing lactofen tolerances in (40 CFR 180. 432). Exposure assessment also considered exposures as a result of acifluorfen, an environmental degrade of lactofen.

EPA assessed dietary exposures from lactofen in food as follows:

i. *Acute exposure*. Quantitative acute dietary exposure and risk assessments are performed for a food-use pesticide, if a toxicological study has indicated the possibility of an effect of concern occurring as a result of a 1–day or single exposure.

The Agency did not identify an endpoint for an acute dietary exposure assessment for the general population due to the lack of toxicological effects of concern attributable to a single exposure (dose) in studies available in the data base including oral developmental toxicity studies in rats and rabbits. An acute dietary exposure assessment was conducted for the population subgroup, female ages 13-49, only. In estimating acute dietary exposure, EPA used the Dietary Exposure Evaluation Model software with the Food Commodity Intake Database (DEEM-FCID™, Version 2.03), which incorporates consumption data from United States Department of Agriculture (USDA) Continuing Surveys of Food Intakes by Individuals (CSFII), 1994–1996 and 1998. As to residue levels in food, EPA assumed all foods for which there are proposed or existing tolerances were treated and contain tolerance-level residues.

ii. *Chronic exposure*. In conducting the chronic dietary exposure assessment EPA used the DEEM/FCID™, Version 2.03, which incorporates food consumption data from USDA's 1994–1996 and 1998 Nationwide Continuing Surveys of Food Intakes by Individuals (CSFII). The chronic dietary analysis assumed all crops for which there are proposed or existing tolerances were treated and contain tolerance-level residues.

iii. *Cancer*. Lactofen has been classified as ''not likely'' to be carcinogenic in humans because of available data on lactofen support activation of the peroxisome proliferator activated receptor alpha (PPARα) as the mode of action which induced liver tumors in rodents. While the proposed mode of action for liver tumors in rodent is qualitatively possible in humans, it is quantitatively implausible and unlikely to take place in humans based on quantitative species toxicodynamic differences in PPARα activation. The quantification of risk is not required.

iv. *Exposure assessment for acifluorfen*. Lactofen degrades in the environment to acifluorfen. Sodium acifluorfen is a registered agricultural pesticide. Accordingly, an aggregate assessment for acifluorfen exposure resulting from both use of lactofen and sodium acifluorfen was also conducted. As to residue levels of acifluorfen in food from use of sodium acifluorfen, EPA assumed all foods for which there are tolerances were treated and contain tolerance level residues.

2. *Dietary exposure from drinking water*. The Agency lacks sufficient

monitoring data to complete a comprehensive dietary exposure analysis and risk assessment for lactofen in drinking water. Because the Agency does not have comprehensive monitoring data, drinking water concentration estimates are made by reliance on simulation or modeling taking into account data on the environmental fate characteristics of lactofen. Further information regarding EPA drinking water models used in pesticide exposure assessment can be found at *http://www.epa.gov/oppefed1/models/water/index.htm*.

The drinking water assessment of lactofen is complicated by the fact that lactofen has a major degradate in common with another registered herbicide, sodium acifluorfen. Lactofen and sodium acifluorfen also have common use sites. The Agency considered the contribution of acifluorfen as an environmental degradate of lactofen and from sodium acifluorfen in the aggregate assessment. The drinking water residues used in the dietary risk assessment were incorporated directly into this dietary exposure from drinking water assessment. Therefore, EPA estimated drinking water concentrations for both lactofen and acifluorfen from lactofen applications. Water residues were incorporated into DEEM-FCID as the food categories ''water, direct, all sources'' and ''water, indirect, all sources.''

The Tier 2 surface water estimated drinking water concentrations (EDWCs) and estimated environmental concentrations (EECs) for lactofen and acifluorfen were generated with standard Florida pepper and Florida tomato cropping scenarios using EPA's pesticide root zone model (PRZM3) and EXAMS. PRZM simulates pesticide fate and transport as a result of leaching, direct spray drift, runoff and erosion from an agricultural field and EXAMS estimates environmental fate and transport of pesticides in surface water body for a 30–year period (1961–1990). The EDWCs and EECs assessment for surface water uses single or multiple sites which typically represent a high-end exposure scenario from pesticide use on a particular cropped or non-cropped site. Ground-water concentrations were estimated using the Tier 1 screening model screening concentration in ground water (SCI-GROW). The models and its description are available at EPA internet site: *http://www.epa.gov/oppefed1/models/water/*.

Based on the PRZM3/EXAMS model, the EDWCs in surface water (lactofen and the acifluorfen derived from lactofen) for acute exposures are estimated to be 1.48 parts per billion (ppb) and 22.5 ppb for lactofen and acifluorfen, respectively, and for chronic exposures 0.044 ppb and 3.9 ppb for lactofen and acifluorfen, respectively. By comparison, the EDWC for chronic exposure for acifluorfen derived from sodium acifluorfen use on soybeans is 3.3 ppb.

For ground water, the SCI-GROW estimates of lactofen and acifluorfen EDWCs from application of lactofen for both acute and chronic exposures are 0.006 ppb lactofen and 2.0 ppb acifluorfen. By comparison, the SCI-GROW estimate of acifluofren EDWCs in ground water from applications of sodium acifluorfen is 3.67 ppb.

Modeled estimates of drinking water concentrations were directly entered into the dietary exposure model. For the lactofen acute dietary risk assessment, the water concentration value of 1.48 ppb was used to assess the contribution to drinking water. For the lactofen chronic dietary risk assessment, the water concentration of value 0.044 ppb was used to assess the contribution to drinking water. For the acifluorfen acute dietary risk assessment, the water concentration value of 22.5 ppb was used to assess the contribution to drinking water. For the acifluorfen chronic dietary risk assessment, the water concentration of value 3.9 ppb was used to assess the contribution to drinking water. Acifluorfen from lactofen and sodium acifluorfen were not combined because they are not expected to be used in the same area.

3. *From non-dietary exposure*. The term ''residential exposure'' is used in this document to refer to non-occupational, non-dietary exposure (e.g., for lawn and garden pest control, indoor pest control, termiticides, and flea and tick control on pets).

There are no products containing lactofen as an active ingredient that are registered for use in a residential or other non-occupational setting. No residential exposure assessment is required.

Residential exposures to the environmental degradate acifluorfen may occur as a result of the use of sodium acifluorfen, which has registered residential spot treatment uses. The only scenario for residential exposure is a short-term spot treatment. Due to the frequency, duration and location of residential spot treatment applications, the Agency considered exposure to adults applying sodium acifluorfen and does not anticipate post-application dermal exposures.

4. *Cumulative effects from substances with a common mechanism of toxicity*. Section 408(b)(2)(D)(v) of the FFDCA requires that, when considering whether to establish, modify, or revoke a tolerance, the Agency consider ''available information'' concerning the cumulative effects of a particular pesticide's residues and ''other substances that have a common mechanism of toxicity.''

Lactofen is a member of the diphenyl ether chemical family. The common toxicity that these compounds share is induction of liver effects (liver hypertrophy, increase in liver weight, tumors). Members of this class have been shown to induce rodent liver effects /tumors through the activation of the PPARα. It should be noted that liver hypertrophy and increases in liver weight are part of the range of morphological changes that result from chemically-mediated effects on the PPARα receptor and hepatocarcinogenesis. Although PPARα agonists can induce liver rodent tumors, the potential for PPARα agonists to induce liver tumors in other species, including humans, appears to be unlikely. This is because evidence shows that these other species are quantitatively less sensitive to the effects of PPARα agonism due to toxicodynamic differences between the human and rodent nuclear PPARα receptor. Thus, while this mode of action for liver tumors in rodent is qualitatively possible in humans, it is quantitatively implausible and unlikely to take place in humans. Accordingly, although members of the diphenyl ether family as well as other classes of compounds may share a common hepatocarcinogenic mode of action, cumulative exposure to PPARα agonists is unlikely to induce liver carcinogenesis in humans.

For information regarding EPA's efforts to determine which chemicals have a common mechanism of toxicity and to evaluate the cumulative effects of such chemicals, see the policy statements released by EPA's Office of Pesticide Programs concerning common mechanism determinations and procedures for cumulating effects from substances found to have a common mechanism on EPA's website at *http://www.epa.gov/pesticides/cumulative*.

D. Safety Factor for Infants and Children

1. *In general*. Section 408 of the FFDCA provides that EPA shall apply an additional (10X) tenfold margin of safety for infants and children in the case of threshold effects to account for prenatal and postnatal toxicity and the completeness of the data base on toxicity and exposure unless EPA determines based on reliable data that a

different margin of safety will be safe for infants and children. This additional margin of safety is commonly referred to as the FQPA safety factor. In applying this provision, EPA either retains the default value of 10X when reliable data do not support the choice of a different factor, or, if reliable data are available, EPA uses a different additional FQPA safety factor value based on the use of traditional uncertainty/safety factors and/or special FQPA safety factors, as appropriate.

2. *Prenatal and postnatal sensitivity*. Although there is qualitative evidence of increased susceptibility in the prenatal developmental studies in rats and rabbits, the Agency did not identify any residual uncertainties after establishing toxicity endpoints and traditional uncertainty factors to be used in the risk assessment of lactofen. The degree of concern for prenatal and postnatal toxicity is low.

3. *Conclusion*. Several factors weighed in favor of the conclusion that no additional safety factor is needed to protect the safety of infants and children.

- There are no outstanding data gaps for developmental toxicity or reproductive toxicity studies;
- There are no residual uncertainties regarding prenatal and postnatal toxicity; and
- There are no residual uncertainties regarding the exposure of infants and children to lactofen.

Nonetheless, EPA determined that an additional safety factor was needed to address the lack of a NOAEL in the rabbit developmental study. Although sufficient reliable information has been submitted on developmental effects of lactofen in rabbits, no NOAEL was identified in one of the two rabbit developmental studies submitted. The endpoints of concern identified in available studies are: Decreased live young/litter, increased embryonic death/litter, and increased incidence of post-implantation loss. These effects were noted at all dose levels (5, 15, 50 mg/kg/day) thus a NOAEL was not established. Consequently, a LOAEL to NOAEL factor is appropriate and the risk assessment applies a 3X uncertainty factor. A FQPA uncertainty factor of infants and children and will be used for the LOAEL to NOAEL extrapolation. The 3X factor is considered to be protective because the incidence of the effects at the lowest dose tested was only marginally higher than the historical controls.

For sodium acifluorfen, the available toxicology database provides sufficient information for selecting various toxicity endpoints and doses for assessing the risks. The Agency evaluated the hazard and exposure data for sodium acifluorfen and recommended retaining the safety factor at 10X due to the data gap for the developmental neurotoxicity study in rats. In accordance with the current EPA policy, the 10x factor will be applied to all exposure durations.

E. Aggregate Risks and Determination of Safety

Safety is assessed for acute and chronic risks by comparing aggregate exposure to the pesticide to the acute population adjusted dose (aPAD) and chronic population adjusted dose (cPAD). The aPAD and cPAD are calculated by dividing the LOC by all applicable uncertainty/safety factors. For linear cancer risks, EPA calculates the probability of additional cancer cases given aggregate exposure. Short-term, intermediate-term, and long-term risks are evaluated by comparing aggregate exposure to the LOC to ensure that the margin of exposure (MOE) called for by the product of all applicable uncertainty/safety factors is not exceeded.

1. *Acute risk*. Acute (1–day) exposures to lactofen may result from consuming treated food and drinking water. No endpoints were identified for the general population so the only assessment was conducted for females ages 13-49. The results of the acute aggregate assessment for lactofen for food and drinking water show that all exposures are below the level of concern, with the lactofen assessments at less than 1% of the aPAD.

The acute aggregate assessment for acifluorfen includes food exposure from tolerance level residues (from sodium acifluorfen applications) and water exposures of acifluorfen as an environmental degradate of lactofen. No acute endpoints were identified for the general population so the only assessment was conducted for females ages 13-49. All exposures are below the level of concern, with the acifluorfen assessments at 6% of the aPAD.

Both the lactofen and acifluorfen assessments are likely to be overestimates of risk because they assume all of the crops (for which there are registered uses) consumed in the U.S. are treated and bear tolerance-level residues.

2. *Chronic risk*. Using the exposure assumptions described in this unit for chronic exposure, EPA has concluded that exposure to lactofen from food and water will utilize <1% of the cPAD for all the population subgroups. There are no residential uses for lactofen that result in chronic residential exposure to lactofen.

The results of the long-term aggregate assessment for acifluorfen show that for food and drinking water, all exposures are below the level of concern. The most highly exposed subgroup in the acifluorfen assessment at 37% of the cPAD was infants, less than 1–year old.

3. *Short-term risk*. Short-term aggregate exposure takes into account residential exposure plus chronic exposure to food and water (considered to be a background exposure level).

Lactofen is not registered for use on any sites that would result in residential exposure. Therefore, the aggregate risk is the sum of the risk from food and water.

An aggregate assessment was conducted for exposure to acifluorfen. Registered residential uses of sodium acifluorfen include spot treatments only. The short term endpoint selected applies to females ages 13-49, but is protective of all populations. The acifluorfen aggregate assessment for this exposure duration includes the average food exposure assuming tolerance level residues, average water exposure (acifluorfen as an environmental degradate of lactofen), and residential handler exposures. The MOE for the aggregate assessment is 16,000, which exceeds the target MOE of 1,000. Therefore, the acifluorfen short term aggregate risks are not of concern.

4. *Intermediate-term risk*. Intermediate-term aggregate exposure takes into account residential exposure plus chronic exposure to food and water (considered to be a background exposure level).

An intermediate-term assessment is not required for lactofen as there are no residential uses of lactofen.

Intermediate-term exposure is not expected for acifluorfen because residential uses of sodium acifluorfen are limited to spot treatments that do not include broadcast application to lawns.

5. *Aggregate cancer risk for U.S. population*. For the reasons discussed in Unit III.C.1.iii. the chronic aggregate assessments are protective of the carcinogenic effects for both lactofen and acifluorfen.

6. *Determination of safety*. Based on these risk assessments, EPA concludes that there is a reasonable certainty that no harm will result to the general population or to infants and children from aggregate exposure to lactofen residues.

IV. Other Considerations

A. Analytical Enforcement Methodology

Acceptable gas chromatography with electron capture detection (GC/ECD) methods are available in the Pesticide Analytical Manual (PAM) Vol. II for the enforcement of tolerances of lactofen and metabolites in plant commodities. A modified version of Method B is listed in the EPA Index of Pesticide Analytical Methods under lactofen. Samples from the pepper and tomato field trials were analyzed using established GC/ECD enforcement methods or modified versions of established enforcement methods. The validated limits of quantitation (LOQs) were 0.01 ppm for peppers and 0.02 ppm from all other trials. The methods are adequate for data collection based on acceptable method validation and concurrent recovery data.

B. International Residue Limits

There are no established or proposed Codex, Canadian, or Mexican maximum residue limits (MRLs) for lactofen in any crops. Therefore, there are no international compatibility issues with respect to U.S. tolerances.

V. Conclusion

Therefore, the regional tolerance is established for residues of [the herbicide lactofen, 1-(carboethoxy)ethyl 5-[2-chloro-4-(trifluoromethyl)phenoxy]-2-nitrobenzoate, in or on the following raw agricultural commodities: Vegetables, fruiting, group 8 at 0.02 ppm, and okra at 0.02 ppm.

VI. Statutory and Executive Order Reviews

This final rule establishes a tolerance under section 408(d) of FFDCA in response to a petition submitted to the Agency. The Office of Management and Budget (OMB) has exempted these types of actions from review under Executive Order 12866, entitled *Regulatory Planning and Review* (58 FR 51735, October 4, 1993). Because this rule has been exempted from review under Executive Order 12866, this rule is not subject to Executive Order 13211, *Actions Concerning Regulations That Significantly Affect Energy Supply, Distribution, or Use* (66 FR 28355, May 22, 2001) or Executive Order 13045, entitled *Protection of Children from Environmental Health Risks and Safety Risks* (62 FR 19885, April 23, 1997). This final rule does not contain any information collections subject to OMB approval under the Paperwork Reduction Act (PRA), 44 U.S.C. 3501 *et seq.*, nor does it require any special considerations under Executive Order 12898, entitled *Federal Actions to Address Environmental Justice in Minority Populations and Low-Income Populations* (59 FR 7629, February 16, 1994).

Since tolerances and exemptions that are established on the basis of a petition under section 408(d) of FFDCA, such as the tolerance in this final rule, do not require the issuance of a proposed rule, the requirements of the Regulatory Flexibility Act (RFA) (5 U.S.C. 601 *et seq.*) do not apply.

This final rule directly regulates growers, food processors, food handlers and food retailers, not States or tribes, nor does this action alter the relationships or distribution of power and responsibilities established by Congress in the preemption provisions of section 408(n)(4) of FFDCA. As such, the Agency has determined that this action will not have a substantial direct effect on States or tribal governments, on the relationship between the national government and the States or tribal governments, or on the distribution of power and responsibilities among the various levels of government or between the Federal Government and Indian tribes. Thus, the Agency has determined that Executive Order 13132, entitled *Federalism* (64 FR 43255, August 10, 1999) and Executive Order 13175, entitled *Consultation and Coordination with Indian Tribal Governments* (65 FR 67249, November 6, 2000) do not apply to this rule. In addition, this rule does not impose any enforceable duty or contain any unfunded mandate as described under Title II of the Unfunded Mandates Reform Act of 1995 (UMRA) (Public Law 104–4).

This action does not involve any technical standards that would require Agency consideration of voluntary consensus standards pursuant to section 12(d) of the National Technology Transfer and Advancement Act of 1995 (NTTAA), Public Law 104–113, section 12(d) (15 U.S.C. 272 note).

VII. Congressional Review Act

The Congressional Review Act, 5 U.S.C. 801 *et seq.*, generally provides that before a rule may take effect, the agency promulgating the rule must submit a rule report to each House of the Congress and to the Comptroller General of the United States. EPA will submit a report containing this rule and other required information to the U.S. Senate, the U.S. House of Representatives, and the Comptroller General of the United States prior to publication of this final rule in the **Federal Register**. This final rule is not a ''major rule'' as defined by 5 U.S.C. 804(2).

List of Subjects in 40 CFR Part 180

Environmental protection, Administrative practice and procedure, Agricultural commodities, Pesticides and pests, Reporting and recordkeeping requirements.

Dated: June 7, 2007.

Lois Rossi,

Director, Registration Division, Office of Pesticide Programs.

■ Therefore, 40 CFR chapter I is amended as follows:

PART 180—[AMENDED]

■ 1. The authority citation for part 180 continues to read as follows:

Authority: 21 U.S.C. 321(q), 346a and 371.

■ 2. Section 180.432 is amended by adding text to paragraph (c) to read as follows:

§ 180.432 Lactofen; tolerances for residues.

* * * * *

(c) *Tolerances with regional registrations.* Tolerances with regional registrations, as defined in 180.1(n) are established for residues of the herbicide, lactofen, 1-(carboethoxy)ethyl 5-[2-chloro-4-(trifluoromethyl)phenoxy]-2-nitrobenzoate, in or on the following food commodities:

Commodity	Parts per million
Okra	0.02
Vegetables, fruiting, group 08	0.02

* * * * *

[FR Doc. E7–11797 Filed 6–19–07; 8:45 am]

BILLING CODE 6560–50–S

ENVIRONMENTAL PROTECTION AGENCY

40 CFR Part 180

[EPA–HQ–OPP–2006–0968; FRL–8135–5]

Imidacloprid; Pesticide Tolerance

AGENCY: Environmental Protection Agency (EPA).

ACTION: Final rule.

SUMMARY: This regulation establishes tolerances for combined residues of imidacloprid and its metabolites containing the 6-chloropyridinyl moiety, all expressed as the parent, in or on peanut, peanut hay and peanut meal; pearl millet grain, forage, hay and straw; proso millet grain, forage, hay and straw; kava roots and leaves; raspberry, wild; soybean forage and hay; and aspirated grain fractions. It also amends existing tolerances for combined residues of imidacloprid and its metabolites containing the 6-chloropyridinyl moiety in or on caneberry subgroup 13-A and soybean seed. Bayer CropScience LLC and Interregional Research Project No. 4 (IR-4) requested these tolerances under the Federal Food, Drug, and Cosmetic Act (FFDCA). This regulation also corrects a typographical error in the commodity term for the existing tolerance on the herbs subgroup, fresh herbs.

DATES: This regulation is effective June 20, 2007. Objections and requests for hearings must be received on or before August 20, 2007, and must be filed in accordance with the instructions provided in 40 CFR part 178 (see also Unit I.C. of the **SUPPLEMENTARY INFORMATION**).

ADDRESSES: EPA has established a docket for this action under docket identification (ID) number EPA–HQ–OPP–2006–0968. To access the electronic docket, go to *http://www.regulations.gov*, select ''Advanced Search,'' then ''Docket Search.'' Insert the docket ID number where indicated and select the ''Submit'' button. Follow the instructions on the regulations.gov web site to view the docket index or access available documents. All documents in the docket are listed in the docket index available in regulations.gov. Although listed in the index, some information is not publicly available, e.g., Confidential Business Information (CBI) or other information whose disclosure is restricted by statute. Certain other material, such as copyrighted material, is not placed on the Internet and will be publicly available only in hard copy form. Publicly available docket materials are available in the electronic docket at *http://www.regulations.gov*,or, if only available in hard copy, at the OPP Regulatory Public Docket in Rm. S–4400, One Potomac Yard (South Bldg.), 2777 S. Crystal Dr., Arlington, VA. The Docket Facility is open from 8:30 a.m. to 4 p.m., Monday through Friday, excluding legal holidays. The Docket Facility telephone number is (703) 305–5805.

FOR FURTHER INFORMATION CONTACT: Barbara Madden, Registration Division (7505P), Office of Pesticide Programs, Environmental Protection Agency, 1200 Pennsylvania Ave., NW., Washington, DC 20460–0001; telephone number: (703) 305–6463; e-mail address: *madden.barbara@epa.gov*.

SUPPLEMENTARY INFORMATION:

I. General Information

A. Does this Action Apply to Me?

You may be potentially affected by this action if you are an agricultural producer, food manufacturer, or pesticide manufacturer. Potentially affected entities may include, but are not limited to those engaged in the following activities:

• Crop production (NAICS code 111), e.g., agricultural workers; greenhouse, nursery, and floriculture workers; farmers.

• Animal production (NAICS code 112), e.g., cattle ranchers and farmers, dairy cattle farmers, livestock farmers.

• Food manufacturing (NAICS code 311), e.g., agricultural workers; farmers; greenhouse, nursery, and floriculture workers; ranchers; pesticide applicators.

• Pesticide manufacturing (NAICS code 32532), e.g., agricultural workers; commercial applicators; farmers; greenhouse, nursery, and floriculture workers; residential users.

This listing is not intended to be exhaustive, but rather to provide a guide for readers regarding entities likely to be affected by this action. Other types of entities not listed in this unit could also be affected. The North American Industrial Classification System (NAICS) codes have been provided to assist you and others in determining whether this action might apply to certain entities. If you have any questions regarding the applicability of this action to a particular entity, consult the person listed under **FOR FURTHER INFORMATION CONTACT**.

B. How Can I Access Electronic Copies of this Document?

In addition to accessing an electronic copy of this **Federal Register** document through the electronic docket at *http://www.regulations.gov*, you may access this **Federal Register** document electronically through the EPA Internet under the ''**Federal Register**'' listings at *http://www.epa.gov/fedrgstr*. You may also access a frequently updated electronic version of EPA's tolerance regulations at 40 CFR part 180 through the Government Printing Office's pilot e-CFR site at *http://www.gpoaccess.gov/ecfr*.

C. Can I File an Objection or Hearing Request?

Under section 408(g) of the FFDCA, any person may file an objection to any aspect of this regulation and may also request a hearing on those objections. You must file your objection or request a hearing on this regulation in accordance with the instructions provided in 40 CFR part 178. To ensure proper receipt by EPA, you must identify docket ID number EPA–HQ–OPP–2006–0968 in the subject line on the first page of your submission. All requests must be in writing, and must be mailed or delivered to the Hearing Clerk as required by 40 CFR part 178 on or before August 20, 2007.

In addition to filing an objection or hearing request with the Hearing Clerk as described in 40 CFR part 178, please submit a copy of the filing that does not contain any CBI for inclusion in the public docket that is described in **ADDRESSES**. Information not marked confidential pursuant to 40 CFR part 2 may be disclosed publicly by EPA without prior notice. Submit this copy, identified by docket ID number EPA–HQ–OPP–2006–0968, by one of the following methods:

• *Federal eRulemaking Portal*: *http://www.regulations.gov*. Follow the on-line instructions for submitting comments.

• *Mail*: Office of Pesticide Programs (OPP) Regulatory Public Docket (7502P), Environmental Protection Agency, 1200 Pennsylvania Ave., NW., Washington, DC 20460–0001.

• *Delivery*: OPP Regulatory Public Docket (7502P), Environmental Protection Agency, Rm. S–4400, One Potomac Yard (South Bldg.), 2777 S. Crystal Dr., Arlington, VA. Deliveries are only accepted during the Docket's normal hours of operation (8:30 a.m. to 4 p.m., Monday through Friday, excluding legal holidays). Special arrangements should be made for deliveries of boxed information. The Docket Facility telephone number is (703) 305–5805.

II. Petition for Tolerance

In the **Federal Register** of December 20, 2006 (71 FR 76321) (FRL–8104–4), EPA issued a notice pursuant to section 408(d)(3) of FFDCA, 21 U.S.C. 346a(d)(3), announcing the filing of pesticide petitions (PP 6E7108 and PP 6E7116) by Interregional Research Project No. 4 (IR-4), 681 U.S. Highway No. 1 South, North Brunswick, NJ 08902–3390. The petitions requested that 40 CFR 180.472 be amended by establishing tolerances for combined residues of the insecticide imidacloprid, 1-[(6-chloro-3-pyridinyl)methyl]-*N*-nitro-2-imidazolidinimine, and its metabolites containing the 6-chloropyridinyl moiety, all expressed as imidacloprid, in or on peanut at 0.45 parts per million (ppm); peanut, hay at 70 ppm; peanut, meal at 0.9 ppm; kava, roots at 0.4 ppm; kava, leaves at 4.0 ppm; millet, pearl, grain at 0.05 ppm; millet, proso, grain at 0.05 ppm; and oat, grain at 0.05 (all requested in PP 6E7116); and on caneberry subgroup 13A and raspberry, wild at 2.5 ppm (requested in PP 6E7108). That notice included summaries of the petitions prepared by IR-4, which are available to the public in the docket, *http://www.regulations.gov*. There were no comments received in response to the notice of filing.

In the **Federal Register** of July 14, 2006 (71 FR 40099) (FRL–8060–4), EPA issued a notice pursuant to section 408(d)(3) of FFDCA, 21 U.S.C. 346a(d)(3), announcing the filing of a pesticide petition (PP 6F7049) by Bayer CropScience LLC, 2 T. W. Alexander Drive, Research Triangle Park, NC 27709. The petition requested that 40 CFR 180.472 be amended by establishing tolerances for combined residues of the insecticide imidacloprid, 1-[(6-chloro-3-pyridinyl)methyl]-*N*-nitro-2-imidazolidinimine, and its metabolites containing the 6-chloropyridinyl moiety, all expressed as imidacloprid, in or on soybean, aspirated grain fractions at 240.0 parts per million (ppm); soybean, forage at 8.0 ppm; soybean, hay at 30.0 ppm; and soybean, seed at 1.6 ppm. That notice referenced a summary of the petition prepared by Bayer CropScience LLC, the registrant, which is available to the public in the docket, *http://www.regulations.gov*. There were no comments received in response to the notice of filing.

Based upon review of the data supporting the petitions, EPA has modified the proposed tolerances. The modifications and reasons for these changes are explained in Unit V.

III. Aggregate Risk Assessment and Determination of Safety

Section 408(b)(2)(A)(i) of the FFDCA allows EPA to establish a tolerance (the legal limit for a pesticide chemical residue in or on a food) only if EPA determines that the tolerance is ''safe.'' Section 408(b)(2)(A)(ii) of the FFDCA defines ''safe'' to mean that ''there is a reasonable certainty that no harm will result from aggregate exposure to the pesticide chemical residue, including all anticipated dietary exposures and all other exposures for which there is reliable information.'' This includes exposure through drinking water and in residential settings, but does not include occupational exposure. Section 408(b)(2)(C) of the FFDCA requires EPA to give special consideration to exposure of infants and children to the pesticide chemical residue in establishing a tolerance and to ''ensure that there is a reasonable certainty that no harm will result to infants and children from aggregate exposure to the pesticide chemical residue. . . .'' These provisions were added to the FFDCA by the Food Quality Protection Act (FQPA) of 1996.

Consistent with FFDCA section 408(b)(2)(D), and the factors specified in section 408(b)(2)(D), EPA has reviewed the available scientific data and other relevant information in support of this action. EPA has sufficient data to assess the hazards of and to make a determination on aggregate exposure for the petitioned-for tolerances for combined residues of imidacloprid, 1-[(6-chloro-3-pyridinyl)methyl]-*N*-nitro-2- imidazolidinimine, and its metabolites containing the 6-chloropyridinyl moiety, all expressed as the parent, in or on peanut at 0.45 ppm; peanut, hay at 35 ppm; peanut, meal at 0.75 ppm; millet, proso, grain at 0.05 ppm; millet, proso, forage at 2.0 ppm; millet, proso, hay at 6.0 ppm; millet, proso, straw at 3.0 ppm; millet, pearl, grain at 0.05 ppm; millet, pearl, forage at 2.0 ppm; millet, pearl, hay at 6.0 ppm; millet, pearl, straw at 3.0 ppm; kava, roots at 0.40 ppm; kava, leaves at 4.0 ppm; caneberry, subgroup 13-A at 2.5 ppm; raspberry, wild at 2.5 ppm; soybean, seed at 3.5 ppm; soybean, forage at 8.0 ppm; soybean hay at 35 ppm and aspirated grain fractions at 240 ppm. EPA's assessment of exposures and risks associated with establishing the tolerance follows.

A. Toxicological Profile

EPA has evaluated the available toxicity data and considered its validity, completeness, and reliability as well as the relationship of the results of the studies to human risk. EPA has also considered available information concerning the variability of the sensitivities of major identifiable subgroups of consumers, including infants and children. Specific information on the studies received and the nature of the adverse effects caused by imidacloprid as well as the no-observed-adverse-effect-level (NOAEL) and the lowest-observed-adverse-effect-level (LOAEL) from the toxicity studies are discussed in the final rule published in the **Federal Register** of June 13, 2003 (68 FR 35303), (FRL–7310–8); available at *http://www.epa.gov/fedrgstr/EPA-PEST/2003/June/Day-13/p14880.htm*.

B. Toxicological Endpoints

For hazards that have a threshold below which there is no appreciable risk, the toxicological level of concern (LOC) is derived from the highest dose at which the NOAEL in the toxicology study identified as appropriate for use in risk assessment. However, if a NOAEL cannot be determined, the LOAEL of concern are identified is sometimes used for risk assessment. Uncertainty/safety factors (UF) are used in conjunction with the LOC to take into account uncertainties inherent in the extrapolation from laboratory animal data to humans and in the variations in sensitivity among members of the human population as well as other unknowns. Safety is assessed for acute and chronic risks by comparing aggregate exposure to the pesticide to the acute population adjusted dose (aPAD) and chronic population adjusted dose (cPAD). The aPAD and cPAD are calculated by dividing the LOC by all applicable uncertainty/safety factors. Short-term, intermediate-term, and long-term risks are evaluated by comparing aggregate exposure to the LOC to ensure that the margin of exposure (MOE) called for by the product of all applicable uncertainty/safety factors is not exceeded.

For non-threshold risks, the Agency assumes that any amount of exposure will lead to some degree of risk and estimates risk in terms of the probability of occurrence of additional adverse cases. Generally, cancer risks are considered non-threshold. For more information on the general principles EPA uses in risk characterization and a complete description of the risk assessment process, see *http://www.epa.gov/fedrgstr/EPA-PEST/1997/November/Day-26/p30948.htm*.

A summary of the toxicological endpoints for imidacloprid used for human risk assessment is discussed in Unit III.B. of the final rule published in the **Federal Register** of June 13, 2003

(68 FR 35303), (FRL–7310–8); available at *http://www.epa.gov/fedrgstr/EPA-PEST/2003/June/Day-13/p14880.htm*.

C. Exposure Assessment

1. *Dietary exposure from food and feed uses*. In evaluating dietary exposure to imidacloprid, EPA considered exposure under the petitioned-for tolerances as well as all existing imidacloprid tolerances in 40 CFR 180.472. EPA assessed dietary exposures from imidacloprid in food as follows:

i. *Acute exposure*. Quantitative acute dietary exposure and risk assessments are performed for a food-use pesticide, if a toxicological study has indicated the possibility of an effect of concern occurring as a result of a 1–day or single exposure. In estimating acute dietary exposure, EPA used food consumption information from the United States Department of Agriculture (USDA) 1994–1996, and 1998 Nationwide Continuing Surveys of Food Intake by Individuals (CSFII). As to residue levels in food, EPA assumed all foods for which there are tolerances were treated and contain tolerance-level residues.

ii. *Chronic exposure*. In conducting the chronic dietary exposure assessment EPA used the food consumption data from the USDA 1994–1996, and 1998 Nationwide CSFII. As to residues in food, EPA assumed tolerance-level residues for all registered and proposed commodities. EPA relied on percent crop treated (PCT) information for some registered commodities but assumed 100 PCT for all proposed new uses.

iii. *Cancer*. An exposure assessment related to cancer risk is unnecessary. The Agency has classified imidacloprid as a ''Group E'' chemical, no evidence of carcinogenicity for humans, by all routes of exposure, based upon lack of evidence of carcinogenicity in rats and mice.

iv. *Anticipated residue and PCT information*. Section 408(b)(2)(F) of FFDCA states that the Agency may use data on the actual percent of food treated for assessing chronic dietary risk only if:

a. The data used are reliable and provide a valid basis to show what percentage of the food derived from such crop is likely to contain such pesticide residue;

b. The exposure estimate does not underestimate exposure for any significant subpopulation group; and

c. Data are available on pesticide use and food consumption in a particular area, the exposure estimate does not understate exposure for the population in such area. In addition, the Agency must provide for periodic evaluation of any estimates used. To provide for the periodic evaluation of the estimate of PCT as required by section 408(b)(2)(F) of FFDCA, EPA may require registrants to submit data on PCT.

The Agency used PCT information as follows:

For the acute dietary assessment, 100 PCT was assumed for all registered and proposed commodities. For the chronic assessment, average weighted PCT information was used for the following commodities: Apples (30%), artichokes (5%), garden beets (15%), blueberry (10%), broccoli (35%), brussels sprouts (55%), cabbage (20%), cantaloupe (30%), carrots (<1%), cauliflower (40%), celery (5%), cherries (5%), collards (10%), corn, field and sweet (<1%), cotton (5%), cucumbers (5%), eggplant (45%), grapefruit (5%), grapes (30%), honeydew (10%), hops (90%), kale (30%), lemons (<1%), lettuce (60%), oranges (5%), peaches (5%), pears (10%), peppers (25%), potatoes (35%), pumpkin (5%), spinach (20%), squash (10%), sugar beets (<1%), tangerines (10%), tomatoes (15%), and watermelon (10%). A default value of 1% was used for all commodities which were reported as having <1 PCT.

EPA uses an average PCT for chronic dietary risk analysis. The average PCT figure for each existing use is derived by combining available federal, state, and private market survey data for that use, averaging by year, averaging across all years, and rounding up to the nearest multiple of five percent except for those situations in which the average PCT is less than one. In those cases <1% is used as the average and <2.5% is used as the maximum. EPA uses a maximum PCT for acute dietary risk analysis. The maximum PCT figure is the single maximum value reported overall from available federal, state, and private market survey data on the existing use, across all years, and rounded up to the nearest multiple of five percent. In most cases, EPA uses available data from United States Department of Agriculture/National Agricultural Statistics Service (USDA/NASS), Proprietary Market Surveys, and the National Center for Food and Agriculture Policy (NCFAP) for the most recent six years.

The Agency believes that the three conditions listed above have been met. With respect to Condition 1, PCT estimates are derived from Federal and private market survey data, which are reliable and have a valid basis. The Agency is reasonably certain that the percentage of the food treated is not likely to be an underestimation. As to Conditions 2 and 3, regional consumption information and consumption information for significant subpopulations is taken into account through EPA's computer-based model for evaluating the exposure of significant subpopulations including several regional groups. Use of this consumption information in EPA's risk assessment process ensures that EPA's exposure estimate does not understate exposure for any significant subpopulation group and allows the Agency to be reasonably certain that no regional population is exposed to residue levels higher than those estimated by the Agency. Other than the data available through national food consumption surveys, EPA does not have available information on the regional consumption of food to which imidacloprid may be applied in a particular area.

2. *Dietary exposure from drinking water*. The Agency lacks sufficient monitoring data to complete a comprehensive dietary exposure analysis and risk assessment for imidacloprid in drinking water. Because the Agency does not have comprehensive monitoring data, drinking water concentration estimates are made by reliance on simulation or modeling taking into account data on the environmental fate characteristics of imidacloprid. Further information regarding EPA drinking water models used in pesticide exposure assessment can be found at *http://www.epa.gov/oppefed1/models/water/index.htm*.

Based on the First Index Screening Tool Reservoir (FIRST) and Screening Concentration in groundwater (SCI-GROW) models, the estimated environmental concentrations (EECs) of imidacloprid for acute exposures are estimated to be 36.0 parts per billion (ppb) for surface water and 2.09 ppb for ground water. The EECs for chronic exposures are estimated to be 17.2 ppb for surface water and 2.09 ppb for ground water.

Modeled estimates of drinking water concentrations were directly entered into the dietary exposure model. For acute dietary risk assessment, the water concentration value of 36.0 ppb was used to assess the contribution to drinking water. For chronic dietary risk assessment, the water concentration of value 17.2 ppb was used to assess the contribution to drinking water.

3. *From non-dietary exposure*. The term ''residential exposure'' is used in this document to refer to non-occupational, non-dietary exposure (e.g., for lawn and garden pest control, indoor pest control, termiticides, and flea and tick control on pets).

Imidacloprid is currently registered for the following residential non-dietary

sites: Granular products for application to lawns and ornamental plants; ready-to-use spray for application to flowers, shrubs and house plants; plant spikes for application to indoor and outdoor residential potted plants; ready-to-use (RTU) potting medium for indoor and outdoor plant containers; liquid concentrate for application to lawns, trees, shrubs and flowers; and ready-to-use liquid for directed spot application to cats and dogs. In addition, there are numerous registered products intended for use by commercial applicators to residential sites. These include gel baits for cockroach control; products intended for commercial ornamental, lawn and turf pest control; products for ant control; and products used as preservatives for wood products, building materials, textiles and plastics. As these products are intended for use by commercial applicators only, they are not to be addressed in terms of residential pesticide handler.

The risk assessment was conducted using the following residential exposure assumptions:

EPA has determined that residential handlers are likely to be exposed to imidacloprid residues via dermal and inhalation routes during handling, mixing, loading, and applying activities. Based on the current use patterns, EPA expects duration of exposure to be short-term (1-30 days). EPA does not expect imidacloprid use to result in intermediate-term or long-term exposure. The scenarios likely to result in adult dermal and/or inhalation residential handler exposures are as follows:

Dermal and inhalation exposure from using a granular push-type spreader.

Dermal exposure from using potted plant spikes.

Dermal exposure from using a plant potting medium.

Dermal and inhalation exposure from using a garden hose-end sprayer (Dermal and inhalation exposure from using a RTU trigger pump spray is expected to be negligible compared to exposures using a garden hose-end sprayer and is, therefore, not assessed separately).

Dermal and inhalation exposure from using a water can/bucket for soil drench applications.

Dermal exposure from using pet spot-on.

EPA has also determined that there is potential for short-term (1 to 30 days), post-application exposure of adults and children/toddlers from the many residential uses of imidacloprid. Due to residential application practices and the half-lives observed in the turf transferable residue study, intermediate-term and long-term post-application exposures are not expected. The scenarios likely to result in dermal (adult and child/toddler) and incidental oral non-dietary (child/toddler) short-term post-application exposures are as follows:

- Toddler oral hand-to-mouth exposure from contacting treated turf.
- Toddler incidental oral ingestion of granules.
- Toddler incidental oral ingestion of pesticide-treated pet.
- Toddler incidental oral exposure from contacting treated pet.
- Toddler dermal exposure from hugging treated pet/contacting treated pet.
- Toddler dermal exposure from contacting treated turf.
- Adult dermal exposure from contacting treated turf.
- Adult golfer dermal exposure from contacting treated turf.
- Adolescent golfer dermal exposure from contacting treated turf.
- Adult dermal exposure from contacting treated pet.

4. *Cumulative effects from substances with a common mechanism of toxicity.* Section 408(b)(2)(D)(v) of the FFDCA requires that, when considering whether to establish, modify, or revoke a tolerance, the Agency consider ''available information'' concerning the cumulative effects of a particular pesticide's residues and ''other substances that have a common mechanism of toxicity.''

Unlike other pesticides for which EPA has followed a cumulative risk approach based on a common mechanism of toxicity, EPA has not made a common mechanism of toxicity finding as to imidacloprid and any other substances and imidacloprid does not appear to produce a toxic metabolite produced by other substances. For the purposes of this tolerance action, therefore, EPA has not assumed that imidacloprid has a common mechanism of toxicity with other substances. For information regarding EPA's efforts to determine which chemicals have a common mechanism of toxicity and to evaluate the cumulative effects of such chemicals, see EPA's website at *http://www.epa.gov/pesticides/cumulative*.

D. Safety Factor for Infants and Children

1. *In general.* Section 408 of FFDCA provides that EPA shall apply an additional (10X) tenfold margin of safety for infants and children in the case of threshold effects to account for prenatal and postnatal toxicity and the completeness of the data base on toxicity and exposure unless EPA determines based on reliable data that a different margin of safety will be safe for infants and children. This additional margin of safety is commonly referred to as the FQPA safety factor. In applying this provision, EPA either retains the default value of 10X when reliable data do not support the choice of a different factor, or, if reliable data are available, EPA uses a different additional FQPA safety factor value based on the use of traditional uncertainty/safety factors and/or special FQPA safety factors, as appropriate.

2. *Prenatal and postnatal sensitivity.* There is no quantitative or qualitative evidence of increased susceptibility of rat and rabbit fetuses to *in utero* exposure in developmental studies. There is no quantitative or qualitative evidence of increased susceptibility of rat offspring in the 2-generation reproduction study. There is evidence of increased qualitative susceptibility in the rat developmental neurotoxicity study, but the concern is low since:

i. The effects in pups are well-characterized with a clear NOAEL;

ii. The pup effects occur in the presence of maternal toxicity with the same NOAEL for effects in pups and dams; and,

iii. The doses and endpoints selected for regulatory purposes are protective of the pup effects noted at higher doses in the developmental neurotoxicity study. Therefore, there are no residual uncertainties for pre-natal/post-natal toxicity in this study

3. *Conclusion.* EPA has determined that reliable data show that it would be safe for infants and children to reduce the FQPA safety factor to 1X. That decision is based on the following findings:

i. The toxicity database for imidacloprid is complete.

ii. Although there is evidence of qualitative susceptibility in the developmental neurotoxicity study in the rat, the concern is low and there are no residual uncertainties for pre-natal/post-natal toxicity, as discussed in Unit III.

iii. There is no evidence that imidacloprid results in increased susceptibility in *in utero* rats or rabbits in the prenatal developmental studies or in young rats in the two-generation reproduction study.

iv. There are no residual uncertainties identified in the exposure databases. The acute dietary food exposure assessment utilizes existing and proposed tolerance level residues and 100 PCT information for all commodities. By using these screening-level assumptions, actual exposures/

risks will not be underestimated. The chronic dietary food exposure assessment utilizes existing and proposed tolerance level residues and PCT data verified by the Agency for several existing uses. For all proposed uses, 100 PCT is assumed. The chronic assessment is somewhat refined and based on reliable data and will not underestimate exposure/risk. Conservative ground and surface water modeling estimates were used to estimate both acute and chronic exposures to residues of imidacloprid in drinking water. The residential handler assessment is based upon the residential standard operating procedures (SOPs) in conjunction with chemical-specific study data in some cases and the Pesticide Handlers Exposure Database (PHED) unit exposures in other cases. The majority of the residential post-application assessment is based upon chemical-specific turf transferable residue data or other chemical-specific post-application exposure study data. The chemical-specific study data and surrogate study data used are reliable and are not expected to underestimate risk to adults or to children. In a few cases where chemical-specific data were not available, the SOPs were used alone. The residential SOPs are based upon reasonable worst-case assumptions and are not expected to underestimate risk. These assessments will not underestimate the exposure and risks posed by imidacloprid.

E. Aggregate Risks and Determination of Safety

Safety is assessed for acute and chronic risks by comparing aggregate exposure to the pesticide to the aPAD and cPAD. The aPAD and cPAD are calculated by dividing the LOC by all applicable uncertainty/safety factors. For linear cancer risks, EPA calculates the probability of additional cancer cases given aggregate exposure. Short-term, intermediate-term, and long-term risks are evaluated by comparing aggregate exposure to the LOC to ensure that the MOE called for by the product of all applicable uncertainty/safety factors is not exceeded.

1. *Acute risk*. Using the exposure assumptions discussed in this unit for acute exposure, the acute dietary exposure from food and water to imidacloprid will occupy 70% of the aPAD for the population group (children, 1 to 2 years old) receiving the greatest exposure. Therefore, EPA does not expect the aggregate exposure to exceed 100% of the aPAD.

2. *Chronic risk*. Using the exposure assumptions described in this unit for chronic exposure, EPA has concluded that exposure to imidacloprid from food and water will utilize 38% of the cPAD for the population group (children, 1 to 2 years old) receiving the greatest exposure. Based on the residential use patterns, chronic residential exposure to residues of imidacloprid is not expected. Therefore, EPA does not expect the aggregate exposure to exceed 100% of the cPAD.

3. *Short-term risk*. Short-term aggregate exposure takes into account residential exposure plus chronic exposure to food and water (considered to be a background exposure level).

Imidacloprid is currently registered for use that could result in short-term residential exposure and the Agency has determined that it is appropriate to aggregate chronic food and water and short-term exposures for imidacloprid.

Using the exposure assumptions described in this unit for short-term exposures, EPA has concluded that food, water, and residential exposures aggregated result in aggregate MOEs of 310 for the general U.S. population and 170 for children, 1 to 2 years old, the population with the highest estimated aggregate short-term exposure to imidacloprid. These aggregate MOEs are based on the pet-treatment scenario, the use scenario resulting in the highest estimated residential exposures for adults and children. Post-application exposures from pet treatment and turf treatment were not combined in the short-term aggregate assessment, because of the low probability of these exposures co-occurring.

4. *Intermediate-term risk*. Intermediate-term aggregate exposure takes into account residential exposure plus chronic exposure to food and water (considered to be a background exposure level).

Intermediate-term and long-term aggregate risk assessments were not performed because, based on the current use patterns for imidacloprid, the Agency does not expect exposures of intermediate- or long-term durations to occur.

5. *Aggregate cancer risk for U.S. population*. The Agency has classified imidacloprid as a ''Group E'' chemical, no evidence of carcinogenicity for humans, by all routes of exposure, based upon lack of evidence of carcinogenicity in rats and mice. Imidacloprid is not expected to pose a cancer risk.

6. *Determination of safety*. Based on these risk assessments, EPA concludes that there is a reasonable certainty that no harm will result to the general population, or to infants and children from aggregate exposure to imidacloprid residues.

IV. Other Considerations

A. Analytical Enforcement Methodology

Adequate enforcement methods are available for determination of imidacloprid residues of concern in plant (Bayer Gas Chromatography/Mass Spectrometry (GC/MS) Method 00200) and livestock commodities (Bayer GC/MS Method 00191). These methods have undergone successful EPA petition method validations (PMVs) and may be requested from: Chief, Analytical Chemistry Branch, Environmental Science Center, 701 Mapes Rd., Ft. Meade, MD 20755–5350; telephone number: (410) 305–2905; e-mail address: *residuemethods@epa.gov*.

B. International Residue Limits

There are no established Canadian or Mexican Maxium Residue Levels (MRLs) for the proposed uses. There is an established Codex MRL for the sum of imidacloprid and its metabolites containing the 6-chloropyridinyl moiety, expressed as imidacloprid, in/on cereal grain at 0.05 ppm, which is consistent with U.S. tolerances on cereal grains.

V. Conclusion

Based upon review of the data supporting the petitions, EPA has modified the proposed tolerances as follows: 1. Added tolerances for millet, proso, forage at 2.0 ppm; millet, proso, hay at 6.0 ppm; millet, proso, straw at 3.0 ppm; millet, pearl, forage at 2.0 ppm; millet, pearl, hay at 6.0 ppm; and millet, pearl, straw at 3.0 ppm (all in PP 6E7116); 2. Revised tolerances for peanut, hay at 35 ppm and peanut, meal at 0.75 ppm (PP 6E7116); soybean, hay at 35 ppm and soybean, seed at 3.5 ppm (PP 6F7049); and 3. Changed the commodity term ''soybean, aspirated grain fractions'' (PP 6F7049) to ''aspirated grain fractions'', the recommended commodity term in the Office of Pesticide Program's Food and Feed Commodity Vocabulary. The proposed tolerance on oat grain (PP 6E7116) is not needed, since a tolerance of 0.05 ppm for oat, grain already exists. EPA determined that tolerances for millet forage, hay and straw are needed based on residue data for similar grain crops showing residues in these commodities. EPA determined that the proposed tolerances for peanut hay/meal and soybean hay/seed were inappropriate and should be revised based on analyses of the residue field trial data using the Agency's Tolerance Spreadsheet in accordance with the Agency's Guidance for Setting Pesticide Tolerances Based on Field Trial Data Standard Operating Procedure (SOP).

Therefore, tolerances are established for combined residues of imidacloprid, 1-[(6-chloro-3-pyridinyl)methyl]-*N*-nitro-2-imidazolidinimine, and its metabolites containing the 6-chloropyridinyl moiety, all expressed as imidacloprid, in or on peanut at 0.45 ppm; peanut, hay at 35 ppm; peanut, meal at 0.75 ppm; millet, proso, grain at 0.05 ppm; millet, proso, forage at 2.0 ppm; millet, proso, hay at 6.0 ppm; millet, proso, straw at 3.0 ppm; millet, pearl, grain at 0.05 ppm; millet, pearl, forage at 2.0 ppm; millet, pearl, hay at 6.0 ppm; millet, pearl, straw at 3.0 ppm; kava, roots at 0.40 ppm; kava, leaves at 4.0 ppm; caneberry, subgroup 13-A at 2.5 ppm; raspberry, wild at 2.5 ppm; soybean, seed at 3.5 ppm; soybean, forage at 8.0 ppm; soybean hay at 35 ppm and aspirated grain fractions at 240 ppm.

In the **Federal Register** of August 11, 2006 (71 FR 46110) (FRL–8081–8), EPA established a tolerance for residues of imidacloprid and its metabolites containing the 6-chloropyridinyl moiety, all expressed as the parent, in or on the commodity ''Herbs subgroup 19B, fresh herbs''. The correct commodity term is ''Herbs subgroup 19-A, fresh herbs''. Therefore, the tolerance for this commodity is revised to read ''Herbs subgroup 19-A, fresh herbs'' at 8.0 ppm.

VI. Statutory and Executive Order Reviews

This final rule establishes a tolerance under section 408(d) of FFDCA in response to a petition submitted to the Agency. The Office of Management and Budget (OMB) has exempted these types of actions from review under Executive Order 12866, entitled *Regulatory Planning and Review* (58 FR 51735, October 4, 1993). Because this rule has been exempted from review under Executive Order 12866, this rule is not subject to Executive Order 13211, *Actions Concerning Regulations That Significantly Affect Energy Supply, Distribution, or Use* (66 FR 28355, May 22, 2001) or Executive Order 13045, entitled *Protection of Children from Environmental Health Risks and Safety Risks* (62 FR 19885, April 23, 1997). This final rule does not contain any information collections subject to OMB approval under the Paperwork Reduction Act (PRA), 44 U.S.C. 3501 *et seq.*, nor does it require any special considerations under Executive Order 12898, entitled *Federal Actions to Address Environmental Justice in Minority Populations and Low-Income Populations* (59 FR 7629, February 16, 1994).

Since tolerances and exemptions that are established on the basis of a petition under section 408(d) of FFDCA, such as the tolerance in this final rule, do not require the issuance of a proposed rule, the requirements of the Regulatory Flexibility Act (RFA) (5 U.S.C. 601 *et seq.*) do not apply.

This final rule directly regulates growers, food processors, food handlers and food retailers, not States or tribes, nor does this action alter the relationships or distribution of power and responsibilities established by Congress in the preemption provisions of section 408(n)(4) of FFDCA. As such, the Agency has determined that this action will not have a substantial direct effect on States or tribal governments, on the relationship between the national government and the States or tribal governments, or on the distribution of power and responsibilities among the various levels of government or between the Federal Government and Indian tribes. Thus, the Agency has determined that Executive Order 13132, entitled *Federalism* (64 FR 43255, August 10, 1999) and Executive Order 13175, entitled *Consultation and Coordination with Indian Tribal Governments* (65 FR 67249, November 6, 2000) do not apply to this rule. In addition, This rule does not impose any enforceable duty or contain any unfunded mandate as described under Title II of the Unfunded Mandates Reform Act of 1995 (UMRA) (Public Law 104–4).

This action does not involve any technical standards that would require Agency consideration of voluntary consensus standards pursuant to section 12(d) of the National Technology Transfer and Advancement Act of 1995 (NTTAA), Public Law 104–113, section 12(d) (15 U.S.C. 272 note).

VII. Congressional Review Act

The Congressional Review Act, 5 U.S.C. 801 *et seq.*, generally provides that before a rule may take effect, the agency promulgating the rule must submit a rule report to each House of the Congress and to the Comptroller General of the United States. EPA will submit a report containing this rule and other required information to the U.S. Senate, the U.S. House of Representatives, and the Comptroller General of the United States prior to publication of this final rule in the **Federal Register**. This final rule is not a ''major rule'' as defined by 5 U.S.C. 804(2).

List of Subjects in 40 CFR Part 180

Environmental protection, Administrative practice and procedure, Agricultural commodities, Pesticides and pests, Reporting and recordkeeping requirements.

Dated: June 11, 2007.

Donald R. Stubbs,

Acting Director, Registration Division, Office of Pesticide Programs.

■ Therefore, 40 CFR chapter I is amended as follows:

PART 180—[AMENDED]

■ 1. The authority citation for part 180 continues to read as follows:

Authority: 21 U.S.C. 321(q), 346a and 371.

■ 2. Section 180.472, the table in paragraph (a) is amended by alphabetically adding commodities; by revising the entries for ''Caneberry, subgroup 13A'' and ''Soybean'' seed, and revising the entry ''Herbs, subgroup 19B, fresh herbs'', to read ''Herbs, subgroup 19-A, fresh herbs''.

The amendments read as follows:

§ 180.472 Imidacloprid; tolerances for residues.

(a) * * *

Commodity	Parts per million
* * * * *	
Aspirated grain fractions	240
* * * * *	
Caneberry, subgroup 13-A	2.5
* * * * *	
Herbs subgroup 19-A, fresh herbs	8.0
* * * * *	
Kava, leaves	4.0

Commodity	Parts per million
Kava, roots	0.40
* * * * *	
Millet, pearl, forage	2.0
Millet, pearl, grain	0.05
Millet, pearl, hay	6.0
Millet, pearl, straw	3.0
Millet, proso, forage	2.0
Millet, proso, grain	0.05
Millet, proso, hay	6.0
Millet, proso, straw	3.0
* * * * *	
Peanut	0.45
Peanut, hay	35
Peanut, meal	0.75
* * * * *	
Raspberry, wild	2.5
* * * * *	
Soybean, forage	8.0
Soybean, hay	35
* * * * *	
Soybean, seed	3.5
* * * * *	

* * * * *

[FR Doc. E7–11792 Filed 6–19–07; 8:45 am]

BILLING CODE 6560–50–S

FEDERAL COMMUNICATIONS COMMISSION

47 CFR Part 1

[FCC 07–94]

Increase of Forfeiture Maxima for Obscene, Indecent, and Profane Broadcasts to Implement the Broadcast Decency Enforcement Act of 2005

AGENCY: Federal Communications Commission.

ACTION: Final rule.

SUMMARY: This document amends the Commission's Rules to increase the maximum forfeiture penalties for obscene, indecent, and profane broadcasts from $32,500 to $325,000 for each violation or each day of a continuing violation, except that the amount assessed for any continuing violation cannot exceed $3,000,000. This action is necessary to implement The Broadcast Decency Enforcement Act of 2005, signed into law by President George W. Bush on June 15, 2006. This document is limited to revising the Commission's Rules pursuant to the Broadcast Decency Enforcement Act, which concerns only penalties for obscenity, indecency, and profanity broadcast violations. The existing penalty limits described in the Commission's Rules would remain as the applicable maxima for all other broadcast violations subject to those Rules.

DATES: Effective July 20, 2007.

ADDRESSES: Federal Communications Commission, 445 12th Street, SW., Washington, DC 20554.

FOR FURTHER INFORMATION CONTACT: Hillary S. DeNigro, Enforcement Bureau, Investigations and Hearings Division, (202) 418–7334.

SUPPLEMENTARY INFORMATION: This is a summary of the Commission's Order, FCC 07–94, adopted on May 17, 2007, and released on June 1, 2007. The complete text of this Order is available for inspection and copying during normal business hours in the FCC Reference Information Center, Courtyard Level, 445 12th Street, SW., Washington, DC 20554 and also may be purchased from the Commission's copy contractor, Best Copy and Printing, Inc., at 1–800–378–3160, CY–B402, 445 12th Street, SW., Washington, DC 20554.

On June 15, 2006, President George W. Bush signed into law The Broadcast Decency Enforcement Act of 2005 (''Broadcast Decency Enforcement Act''). (*See* Pub. L. 109–235, 120 Stat. 491 (2006)). The legislation amends section 503(b)(2) of the Communications Act of 1934, as amended (''Communications Act''), 47 U.S.C. 503(b)(2), to increase the maximum forfeiture penalties for obscene, indecent, and profane broadcasts. This Order amends section 1.80(b)(1) of the Commission's Rules (''Rules''), 47 CFR 1.80(b)(1), to reflect the new penalties.

Section 1.80(b)(1) of the Rules specifies the maximum possible forfeiture penalties for a range of violations, including, but not limited to: Failure to comply with the terms and conditions of any Commission license, permit, certificate or instrument of authorization; failure to comply with any provision of the Communications Act or any Commission rule, regulation or order; and violation of section 1304 (broadcast of lottery information), 1343

(fraud by wire, radio or television) and 1464 (broadcast of obscene, indecent, or profane material) of Title 18 of the United States Code. Under the rule, the Commission may propose forfeitures against broadcast licensees of up to $32,500 for each violation or each day of a continuing violation, except that the amount assessed for any continuing violation shall not exceed $325,000 for any single act or failure to act. The Broadcast Decency Enforcement Act increases those amounts for obscene, indecent, or profane broadcasts. Specifically, the new law raises the maximum forfeiture for the broadcast of obscenity, indecency, or profanity to $325,000 for each violation or each day of a continuing violation, except that the amount assessed for any continuing violation shall not exceed $3,000,000 for any single act or failure to act. Accordingly, section 1.80(b)(1) will be modified to reflect the new maximum penalties specified in the legislation.

This Order is limited to revising section 1.80(b)(1) pursuant to the Broadcast Decency Enforcement Act, which concerns only penalties for obscenity, indecency, and profanity broadcast violations. The existing penalty limits described in section 1.80(b)(1) would remain as the applicable maxima for all other broadcast violations subject to that rule.

The rule change adopted in this Order merely implements a specific statutory command and does not involve discretionary action on the part of the Commission. Accordingly, we find that, for good cause, compliance with the notice and comment provisions of the Administrative Procedure Act is unnecessary. (*See* 5 U.S.C. 553(b)(B)).

Since a notice of proposed rulemaking is not required, the Regulatory Flexibility Act, 5 U.S.C. 601 *et. seq.,* does not apply. (*See* 5 U.S.C. 603–604).

The actions taken herein have been analyzed with respect to the Paperwork Reduction Act of 1995 and found to impose no new or modified reporting and record keeping requirements or burdens on the public. In addition, therefore, our actions do not impose any new or modified information collection burden ''for small business concerns with fewer than 25 employees,'' pursuant to the Small Business Paperwork Relief Act of 2002, Public Law 107–198, *see* 44 U.S.C. 3506(c)(4).

The Commission will send a copy of this Order in a report to be sent to Congress and the Government Accountability Office pursuant to the Congressional Review Act, *see* 5 U.S.C. 801(a)(1)(A).

List of Subjects in 47 CFR Part 1

Administrative practice and procedure, Penalties.

Federal Communications Commission.

Marlene H. Dortch,

Secretary.

Final Rule

■ For the reasons discussed in the preamble, the Federal Communications Commission amends 47 CFR part 1 as follows:

PART 1—PRACTICE AND PROCEDURE

■ 1. The authority citation for part 1 continues to read as follows:

Authority: 47 U.S.C. 151, 154(i) and (j), 155, 157, 225, 303(r), and 309.

Subpart A—General Rules of Practice and Procedure

■ 2. Section 1.80 is amended by revising paragraph (b)(1) to read as follows:

§ 1.80 Forfeiture proceedings.

* * * * *

(b) *Limits on the amount of forfeiture assessed.* (1) If the violator is a broadcast station licensee or permittee, a cable television operator, or an applicant for any broadcast or cable television operator license, permit, certificate, or other instrument of authorization issued by the Commission, except as otherwise noted in this paragraph, the forfeiture penalty under this section shall not exceed $32,500 for each violation or each day of a continuing violation, except that the amount assessed for any continuing violation shall not exceed a total of $325,000 for any single act or failure to act described in paragraph (a) of this section. There is no limit on forfeiture assessments for EEO violations by cable operators that occur after notification by the Commission of a potential violation. See section 634(f)(2) of the Communications Act. Notwithstanding the foregoing in this section, if the violator is a broadcast station licensee or permittee or an applicant for any broadcast license, permit, certificate, or other instrument of authorization issued by the Commission, and if the violator is determined by the Commission to have broadcast obscene, indecent, or profane material, the forfeiture penalty under this section shall not exceed $325,000 for each violation or each day of a continuing violation, except that the amount assessed for any continuing violation shall not exceed a total of $3,000,000 for any single act or failure to act described in paragraph (a) of this section.

* * * * *

[FR Doc. E7–11808 Filed 6–19–07; 8:45 am]

BILLING CODE 6712–01–P

FEDERAL COMMUNICATIONS COMMISSION

47 CFR Part 90

[WT Docket No. 02–55—FCC 07–92]

Improving Public Safety Communications in the 800 MHz Band

AGENCY: Federal Communications Commission.

ACTION: Clarification.

SUMMARY: The Commission clarifies the standard for determining the acceptability of costs that Sprint Nextel Corporation (Sprint) is required to pay in connection with the 800 MHz rebanding process. Specifically, the Commission clarified the provision in the 800 MHz Report and Order that such costs must be the ''minimum necessary'' to accomplish rebanding of 800 MHz licensees in a reasonable, prudent and timely manner

DATES: Effective May 18, 2007.

FOR FURTHER INFORMATION CONTACT: John Evanoff, Public Safety and Homeland Security Bureau, (202) 418–0848, or via the Internet at *John.Evanoff@fcc.gov.*

SUPPLEMENTARY INFORMATION: This document summarizes the Memorandum Opinion and Order in WT Docket No. 02–55, adopted on May 17, 2007, and released on May 18, 2007. The full text of this document is available for public inspection on the Commission's Internet site at *http://www.fcc.gov.* It is also available for inspection and copying during regular business hours in the FCC Reference Center (Room CY–A257), 445 12th Street, SW., Washington, DC 20554. The full text of this document also may be purchased from the Commission's duplication contractor, Best Copy and Printing Inc., Portals II, 445 12th St., SW., Room CY–B402, Washington, DC 20554; telephone (202) 488–5300; fax (202) 488–5563; e-mail *FCC@BCPIWEB.COM.*

Background

1. In the 800 MHz Report and Order, 69 FR 67823 (November 22, 2004), the Commission ordered the rebanding of the 800 MHz band to resolve interference between commercial and public safety systems in the band. In that order, the Commission required Sprint Nextel Corporation (Sprint) to

pay for relocation of all affected 800 MHz licensee systems to their new channel assignments, including the expense of retuning or replacing the licensee's equipment as required. Sprint must provide each relocating licensee with ''comparable facilities'' on the new channel(s), and must provide for a seamless transition to enable licensee operations to continue without interruption during the relocation process. In exchange for Sprint's undertaking these obligations and agreeing to relinquish a portion of its 800 MHz spectrum, the Commission modified Sprint's licenses to authorize operations on 10 megahertz of spectrum in the 1.9 GHz band. At the end of the rebanding process, Sprint will receive credit for the expenses it has incurred and the spectrum it has relinquished. If the value of these expenses and spectrum is less than the value the Commission assigned to the 1.9 GHz spectrum, Sprint must make a ''windfall payment'' for the difference to the U.S. Treasury.

2. In an April 20, 2007 *ex parte* filing, Sprint requested, inter alia, that the Commission clarify the standard in this proceeding for determining what rebanding costs are acceptable and therefore entitled to be credited by Sprint against its windfall payment obligation. Specifically, Sprint contends that its ability to negotiate cost provisions in its Planning Funding Agreements (PFAs) and Frequency Relocation Agreements (FRAs) with 800 MHz licensees is constrained by an overly narrow interpretation of language in the 800 MHz Report and Order that requires licensees to certify that the funds they request from Sprint ''are the minimum necessary to provide facilities comparable to those presently in use.'' Sprint asserts that ''this 'minimum necessary' cost standard has been interpreted for 21 months of this process to essentially mean the 'absolute lowest cost.' '' As a result, ''Sprint Nextel is in the position of having to challenge virtually every dollar spent on band reconfiguration to assure compliance with 'minimum cost.' '' If it does not do so, Sprint contends that it risks violating its windfall payment obligation and could face criminal liability for agreeing to compensation of licensees that is later found to exceed the minimum cost standard.

3. To address this concern, Sprint states that it requires ''unambiguous Commission guidance and permission to spend more dollars than it may think is absolutely necessary in order to move retuning forward and achieve the overall goals of 800 MHz reconfiguration.'' Sprint requests that the Commission afford it ''greater flexibility in its review and acceptance of cost proposals that may not be the lowest cost, but that are 'reasonable and prudent' and that are consistent with the Commission's objectives in the overall band reconfiguration initiative.'' However, Sprint stresses that ''[t]his does not mean that all public safety proposed costs should be 'rubber stamped' by Sprint Nextel or the TA.'' Sprint asserts that under its proposed clarification of the ''minimum necessary'' cost standard, ''public safety should still have the burden of demonstrating that requested funds are reasonable, prudent and necessary.''

4. On May 9, 2007, representatives of several public safety organizations submitted an *ex parte* letter supporting Commission clarification of this issue. The letter states that Sprint's ''narrow interpretation'' of the ''minimum necessary'' cost language has led to many protracted negotiations between Sprint and public safety licensees regarding rebanding costs, and has required public safety licensees to justify costs in ''excruciating detail.'' Public safety's letter urges the Commission ''to take appropriate steps to permit rapid resolution of rebanding disputes, without parties having to battle over every dollar of estimated cost.''

Discussion

5. We agree with Sprint that the term ''minimum necessary'' cost does not mean the absolute lowest cost in all circumstances. Rather, the term refers to the minimum cost necessary to accomplish rebanding in a reasonable, prudent, and timely manner. We do not expect Sprint to insist on reducing rebanding costs to their lowest possible level if the cost savings it seeks to achieve come at the expense of a reasonable, prudent, and timely approach toward accomplishing the rebanding task in question.

6. As Sprint notes, the Commission in the 800 MHz Report and Order provided that licensees seeking compensation from Sprint for rebanding costs must certify that ''the funds requested are the minimum necessary to provide facilities comparable to those presently in use.'' However, the Commission never intended this articulation of the standard for assessing costs to be viewed in isolation. In the 800 MHz Supplemental Order, 70 FR 6758 (February 8, 2005), the Commission further elaborated on the issue of acceptable costs, stating that ''the Transition Administrator may authorize the disbursement of funds for any reasonable and prudent expense directly related to the retuning of a specific 800 MHz system.'' Thus, the standard for determining acceptable costs takes into consideration both the cost amount and the degree to which the expenditure reasonably furthers the Commission's objectives in this proceeding. We therefore provide the following clarification of the standard to provide guidance to rebanding stakeholders and to reduce the likelihood of disputes over costs that could impede the rebanding process.

7. We clarify that the assessment in any individual PFA or FRA negotiation of whether a cost is ''reasonable and prudent'' may— and indeed should— take into account the overall goals of this proceeding, not just the issue of minimum cost. As the Commission has stated previously, one of the most critical of these goals is timely and efficient completion of the rebanding process, to ensure that the interference problem that threatens 800 MHz public safety systems is resolved as quickly and as comprehensively as possible. Another key goal is to minimize the burden rebanding imposes on public safety licensees, and to provide a seamless transition that preserves public safety's ability to operate during the transition.

8. In some instances, achieving these goals may justify greater expenditure than the minimum cost required to accomplish a task if these goals were not considered. For example, if identifying the most inexpensive equipment component required to provide ''comparable facilities'' would take months, thereby impeding timely completion of the task, Sprint would be justified in purchasing a slightly more expensive component that could be identified and procured within a few days. Similarly, in some systems, additional rebanding may proceed more efficiently and with less burden on first responders if rebanding tasks are initiated early in the process and carried on in stages throughout the process, even though this may be more costly than performing all of the rebanding work at once at a later date. In such cases, the Commission's orders allow the additional expense because performing all of the rebanding work at a later stage of the process could increase the transition burden on public safety and jeopardize timely completion of rebanding.

9. Another situation in which greater expenditure may be justified is when the possibility of identifying cost reductions is outweighed by the cost and time required to pursue the negotiation and mediation process. The Commission established the negotiation

and mediation mechanism to facilitate resolution of disputed issues between Sprint and individual licensees. The Commission further determined that Sprint should pay the cost of both sides' participation in negotiations and mediation and receive credit for the expense. However, we are concerned that Sprint's assumption that it must adhere to a narrow interpretation of the ''minimum necessary'' cost standard has caused it to routinely challenge cost claims in virtually every negotiation and mediation. In many cases, the resulting cost of prolonged negotiation and mediation appears to be higher than the savings that resolution of the disputed issues would generate. In addition, prolonged negotiation and mediation of cost issues in multiple cases has impeded timely completion of the rebanding process. Therefore, we clarify that it is appropriate for Sprint to agree to (and the TA to approve) payment of disputed costs where such payment will avoid greater expense to negotiate and/or mediate the dispute and will further the goal of timely and efficient rebanding.

10. In providing the flexibility discussed above, we agree with Sprint that this standard does not allow ''goldplating'' by licensees or ''rubber stamping'' of proposed costs by Sprint and the TA. Licensees remain responsible for demonstrating that their funding requests do not exceed the minimum cost necessary to accomplish rebanding in a reasonable, prudent, and timely manner. Furthermore, Sprint should not propose to pay and the TA should not approve payment of higher costs when a lower-cost alternative is clearly available that would provide the licensee with comparable facilities as defined by the Commission's orders in this proceeding and would effectuate a smooth and timely transition.

11. We further clarify that in determining whether particular costs are acceptable, Sprint and other 800 MHz licensees may take into account costs that have been negotiated in other PFAs and FRAs for rebanding of similar systems, and that have been approved by the TA. Similarly, Sprint and other licensee may consider cost metrics that have been derived by the TA from aggregated PFA and FRA data. At this point in the rebanding process, Sprint has entered into numerous PFAs and FRAs with 800 MHz licensees. These agreements have been reached through vigorous arms-length negotiations and (in many cases) mediation, and have been approved by the TA as meeting the Commission's cost standards. As a result, the cost data from these agreements provides an important set of benchmarks for assessing the reasonability of costs in ongoing and future negotiations. In cases where Sprint and a licensee reach a PFA or FRA with costs that the TA can verify are consistent with these benchmarks, we will presume that the costs comply with the Commission's cost standard as articulated in this and prior orders in this proceeding.

Ordering Clauses

12. Accordingly, it is ordered that, pursuant to Sections 4(i), 303(f), 332, 337 and 405 of the Communications Act of 1934, as amended, 47 U.S.C. 154(i), 303(f), 332, 337 and 405, this Memorandum Opinion and Order is hereby adopted.

13. It is further ordered that the request of Sprint Nextel Corporation is RESOLVED to the extent indicated herein.

14. This document does not contain new or modified information collection requirements subject to the Paperwork Reduction Act of 1995 (PRA), Public Law 104–13. In addition, therefore, it does not contain any new or modified ''information collection burden for small business concerns with fewer than 25 employees,'' pursuant to the Small Business Paperwork Relief Act of 2002, Public Law 107–198, see 44 U.S.C. 3506(c)(4).

15. The Commission will send a copy of this Memorandum Opinion and Order in a report to be sent to Congress and the Government Accountability Office pursuant to the Congressional Review Act, see 5 U.S.C. 801(a)(1)(A).

Federal Communications Commission.

Marlene H. Dortch,

Secretary.

[FR Doc. E7–11806 Filed 6–19–07; 8:45 am]

BILLING CODE 6712–01–P

Proposed Rules

Federal Register
Vol. 72, No. 118
Wednesday, June 20, 2007

This section of the FEDERAL REGISTER contains notices to the public of the proposed issuance of rules and regulations. The purpose of these notices is to give interested persons an opportunity to participate in the rule making prior to the adoption of the final rules.

DEPARTMENT OF AGRICULTURE

Agricultural Marketing Service

7 CFR Part 60

[Docket No. AMS–LS–06–0081; LS–04–04]

RIN 0581–AC26

Mandatory Country of Origin Labeling of Beef, Lamb, Pork, Perishable Agricultural Commodities, and Peanuts

AGENCY: Agricultural Marketing Service, USDA.

ACTION: Proposed Rule; reopening of comment period.

SUMMARY: The Agricultural Marketing Service (AMS) is reopening the comment period for 60 days for the proposed rule for mandatory country of origin labeling (COOL) for beef, lamb, pork, perishable agricultural commodities, and peanuts that was published in the **Federal Register** on October 30, 2003 (68 FR 61944). AMS requests general comments on the proposed rule taking into account that the Agency has changed corresponding definitions and requirements in the interim final rule for fish and shellfish published in the **Federal Register** on October 5, 2004 (69 FR 59708). When preparing comments on the proposed rule, AMS asks that interested parties consider the provisions of the interim final rule for fish and shellfish and whether the definitions and requirements in the interim final rule can also be applied to beef, lamb, pork, perishable agricultural commodities, and peanuts. The interim final rule's definitions and requirements include, but are not limited to: Processed food item definition, country of origin notification, markings, and recordkeeping requirements. All affected persons are hereby given notice of the opportunity to submit written data and views concerning the proposed rule. AMS will review and consider the submitted comments and information as it promulgates a final regulatory action for mandatory COOL for beef, lamb, pork, perishable agricultural commodities and peanut covered commodities. AMS is simultaneously reopening the comment period for the interim final rule for the mandatory COOL program for fish and shellfish covered commodities.

DATES: Comments must be submitted on or before August 20, 2007, to be assured of consideration.

ADDRESSES: Comments should be submitted through the Internet at *http://www.regulations.gov.* Send written comments to: Country of Origin Labeling Program, Room 2607–S; Agricultural Marketing Service (AMS), USDA; 1400 Independence Avenue, SW., Washington, DC 20250–0254, or by facsimile to (202) 720–1112. Comments received will be posted on the Web site *http://www.regulations.gov.* Comments sent to the above location that specifically pertain to the information collection and recordkeeping requirements should also be sent to the Desk Officer for Agriculture, Office of Information and Regulatory Affairs, Office of Management and Budget (OMB), New Executive Office Building, 725 17th Street, NW., Room 725, Washington, DC 20503.

FOR FURTHER INFORMATION CONTACT: Martin O'Connor, Chief; Standards, Analysis, and Technology Branch; Livestock and Seed Program, AMS, USDA, by telephone on (202) 720–4486, or via e-mail to: *COOL@usda.gov.* Information can also be found at *http://www.ams.usda.gov/cool/.*

SUPPLEMENTARY INFORMATION: The Farm Security and Rural Investment Act of 2002 (Farm Bill) (7 U.S.C. 7901) and the 2002 Supplemental Appropriations Act (Appropriations Act) (Pub. L. 107–206) amended the Agricultural Marketing Act of 1946 (7 U.S.C. 1621 *et seq.*) by adding 7 U.S.C. 1638–1638d to direct the Secretary of Agriculture to promulgate regulations by September 30, 2004, requiring retailers to notify their customers of the country of origin of covered commodities. On October 30, 2003, AMS published a proposed rule for mandatory COOL for all covered commodities—beef, lamb, pork, fish, perishable agricultural commodities, and peanuts (68 FR 61944). The proposed rule can be found at: *http://www.ams.usda.gov/cool/index.htm.* Subsequently, the FY 2004 Consolidated Appropriations Act (Pub. L. 108–199) delayed the applicability of mandatory COOL for all covered commodities except wild and farm-raised fish and shellfish until September 30, 2006. The Agriculture, Rural Development, Food and Drug Administration, and Related Agencies Appropriations Act of 2006 (Pub. L. 109–97) further delayed the applicability of mandatory COOL for all covered commodities except wild and farm-raised fish and shellfish until September 30, 2008. On October 5, 2004, AMS published an interim final rule (69 FR 59708) for the mandatory COOL program for fish and shellfish. The interim final rule can be found at: *http://www.ams.usda.gov/cool/index.htm.* The interim final rule became effective on April 4, 2005.

AMS reopened the interim final rule's comment period for 90 days on November 27, 2006 (71 FR 68431). The reopened comment period was limited to comments concerning the economic impacts of the interim final rule, including implementation costs, maintenance, the burden of the information collection and recordkeeping requirements, benefits, and net economic impacts. Further, comments and information received as a result of the reopened interim final rule's comment period, to the extent relevant, would be reviewed in connection with any final regulatory action for any of the covered commodities.

In preparation for promulgating a final regulatory action, AMS seeks comment on all aspects of the proposed rule for mandatory COOL for beef, lamb, pork, perishable agricultural commodities, and peanuts as well as specific comments, data, and other relevant information on whether the definitions and requirements contained in the interim final rule for fish and shellfish can be applied to a mandatory COOL program for beef, lamb, pork, perishable agricultural commodities and peanuts. Additionally, interested parties are requested to provide comments and perspective related to the information that is to be provided from a mandatory COOL program and the expected costs and benefits of such a program. While AMS welcomes all comments on a mandatory COOL program for the applicable covered commodities, comments addressing the following definitions and requirements are of special interest:

Processed Food Item

In an effort to make the definition of a processed food item clearer in the interim final rule, AMS modified the language in the proposed rule for fish and shellfish to provide specific examples of the types of processing that that would result in a product being considered a processed food item. Under the interim final rule, all cooked items (e.g., canned fish, cooked shrimp) and breaded products are considered processed food items and are excluded from coverage. In addition, retail items have given a distinct flavor (e.g., Cajun marinated catfish) are also considered processed food items. Should the Agency provide specific examples of the types of processing that would result in beef, lamb, pork, perishable agricultural commodity and peanut covered commodities being considered processed food items and excluded from coverage? Are there significant differences in the preparation of beef, lamb, pork, perishable agricultural commodities and peanuts for retail sale, compared to fish and shellfish, which the Agency should consider? Are the major components of the definition of a processed food item set forth in the interim final rule for fish and shellfish (i.e., change in character and/or combined with other substantive components) also applicable to beef, lamb, pork, perishable agricultural commodities and peanuts?

Country of Origin Notification

Under § 60.200 of the interim final rule for fish and shellfish, the requirements and procedures for labeling a covered commodity for country of origin are established. The interim final rule modified provision of the proposed rule by changing the labeling and notification requirements to simplify the labels and remain compliant and consistent with other existing Federal regulatory requirements. The interim final rule changed the requirements for the labeling of imported fish and shellfish covered commodities not substantially transformed in the United States, imported fish and shellfish covered commodities substantially transformed in the United States, and blended products (i.e., commingling of the same covered commodity). AMS seeks comments on the applicability of these requirements and procedures to beef, lamb, pork, perishable agricultural commodity and peanut covered commodities. Can the requirements contained in the interim final rule for fish and shellfish for determining the origin of imported products and products partially produced in a foreign country and imported into and further processed in the United States be used in whole or part? What would be the impact of applying the same or similar requirements for beef, lamb, pork, perishable agricultural commodity and peanut covered commodities?

Markings

Under § 60.300 of the interim final rule for fish and shellfish the types of markings permissible to label covered commodities are defined. AMS seeks comment on the established requirements for markings for all covered commodities which includes the type of labels allowed, placement, font, design, signs, location, and allowable abbreviations.

Recordkeeping Requirements

The recordkeeping requirements for retailers and suppliers are established under § 60.400 of the interim final rule for fish and shellfish. The interim final rule for fish and shellfish modified provisions of the proposed rule for fish and shellfish by significantly changing the record retention requirements of retailers and their suppliers. For example, the retention of records for a specific transaction was reduced from 2 years to 1 year for both retailers and suppliers for certain records. Additionally, records required to verify country of origin and method of production for fish and shellfish covered commodities at the retail site were reduced from 7 days following retail sale of the product to the timeframe the product is for sale. AMS seeks comment on the impact of applying the recordkeeping requirements of the interim final rule for this proposed rule for beef, lamb, pork, perishable agricultural commodity and peanut covered commodities. Of particular interest are comments on internal recordkeeping systems that beef, lamb, pork, perishable agricultural commodity and peanut covered commodity suppliers may use to comply with requirements for providing accurate country of origin information to retailers. Are the retention periods established for records to substantiate claims in the interim final rule for fish and shellfish reasonable for this proposed rule given the nature of the covered commodities? How will the recordkeeping requirements set forth in the interim final rule for fish and shellfish impact the initial and intermediary suppliers of beef, lamb, pork, perishable agricultural commodity and peanut covered commodities in the supply chain?

Timeframes for Products Produced Prior to the Implementation Date To Clear the Channels of Commerce

In the interim final rule, fish and shellfish covered commodities derived from fish and shellfish caught or harvested before December 6, 2004, were exempt from the mandatory COOL program. This provision was provided to allow products without source verification information produced prior to the implementation date (i.e., April 4, 2005) to clear the channels of commerce. Since harvest is a key component of determining origin, this provision allowed suppliers time to develop the necessary verification and recordkeeping systems to comply with the mandatory COOL program. That being said, should specific timeframes for exempting beef, lamb, pork, perishable agricultural commodity and peanut covered commodities without verifiable records produced prior to an implementation date be established in this proposed rule? If so, what should be the specific timeframe for each covered commodity?

Authority: 7 U.S.C. 1621 *et seq.*

Dated: June 14, 2007.

Lloyd C. Day,

Administrator, Agricultural Marketing Service.

[FR Doc. 07–3029 Filed 6–15–07; 8:53 am]

BILLING CODE 3410–02–M

DEPARTMENT OF AGRICULTURE

Agricultural Marketing Service

7 CFR Parts 905 and 923

[Docket Nos. AMS–FV–07–0017; FV07–905–610 Review; and AMS–FV–07–0018; FV07–923–610 Review]

Oranges, Grapefruit, Tangerines, and Tangelos Grown in Florida; and Sweet Cherries Grown in Designated Counties in Washington; Section 610 Reviews

AGENCY: Agricultural Marketing Service, USDA.

ACTION: Notice of review and request for comments.

SUMMARY: This document announces that the Agricultural Marketing Service (AMS) plans to review Marketing Order 905 (Oranges, Grapefruit, Tangerines, and Tangelos Grown in Florida), and Marketing Order 923 (Sweet Cherries Grown in Designated Counties in Washington) under the criteria contained in section 610 of the Regulatory Flexibility Act (RFA).

DATES: Written comments on this notice must be received by August 20, 2007.

ADDRESSES: Interested persons are invited to submit written comments concerning this notice of review. Comments must be sent to the Docket Clerk, Marketing Order Administration Branch, Fruit and Vegetable Programs, AMS, USDA, 1400 Independence Avenue, SW., Stop 0237, Washington, DC 20250–0237; Fax: (202) 720–8938, or Internet: *http://www.regulations.gov.* All comments should reference the docket number and the date and page number of this issue of the **Federal Register** and will be made available for public inspection in the Office of the Docket Clerk during regular business hours, or may be viewed at *http://www.regulations.gov.*

FOR FURTHER INFORMATION CONTACT: Christian Nissen, Southeast Marketing Field Office, Marketing Order Administration Branch, Fruit and Vegetable Programs, AMS, USDA, Southeast Marketing Field Office, Marketing Order Administration Branch, Fruit and Vegetable Programs, AMS, USDA, Winter Haven, Florida; Telephone: (863) 324–3375; Fax: (863) 325–8793; or e-mail: *Christian.Nissen@usda.gov* regarding the Florida citrus marketing order; and Robert Curry, Northwest Marketing Field Office, Marketing Order Administration Branch, Fruit and Vegetable Programs, AMS, USDA, Portland, Oregon; Telephone: (503) 326–2724; Fax: (503) 326–7440; or e-mail: *Robert.Curry@usda.gov* regarding the Washington sweet cherry marketing order.

SUPPLEMENTARY INFORMATION: Marketing Order No. 905, as amended (7 CFR part 905), regulates the handling of oranges, grapefruit, tangerines, and tangelos grown in Florida. Marketing Order No. 923, as amended (7 CFR part 923), regulates the handling of sweet cherries grown in designated counties in Washington. These marketing orders are effective under the Agricultural Marketing Agreement Act of 1937 (AMAA), as amended (7 U.S.C. 601–674).

AMS initially published in the **Federal Register** on February 18, 1999 (64 FR 8014), its plan to review certain regulations, including Marketing Order Nos. 905 and 923, under criteria contained in section 610 of the Regulatory Flexibility Act (RFA) (5 U.S.C. 601–612). Due to certain changes and additions, updated plans were published in the **Federal Register** on January 4, 2002 (67 FR 525), August 14, 2003 (68 FR 48574), and finally on March 24, 2006 (71 FR 14827). Because many AMS regulations impact small entities, AMS has decided, as a matter of policy, to review certain regulations which, although they may not meet the threshold requirement under section 610 of the RFA, warrant review.

The purpose of the review will be to determine whether the marketing orders for Florida citrus and Washington sweet cherries should be continued without change, amendment, or termination (consistent with the objectives of the AMAA) to minimize the impacts on small entities. In conducting these reviews, AMS will consider the following factors: (1) The continued need for each of the marketing orders; (2) the nature of complaints or comments received from the public concerning these marketing orders; (3) the complexity of these marketing orders; (4) the extent to which these marketing orders overlap, duplicate, or conflict with other Federal rules, and, to the extent feasible, with State and local governmental rules; and (5) the length of time since these marketing orders have been evaluated, or the degree to which technology, economic conditions, or other factors have changed in the areas affected by both of these marketing orders.

Written comments, views, opinions, and other information regarding the impact the Florida citrus and Washington sweet cherry marketing orders have on small businesses are invited.

Dated: June 14, 2007.

Lloyd C. Day,

Administrator, Agricultural Marketing Service.

[FR Doc. E7–11929 Filed 6–19–07; 8:45 am]

BILLING CODE 3410–02–P

DEPARTMENT OF AGRICULTURE

Agricultural Marketing Service

7 CFR Parts 916 and 917

[Docket No. AMS–FV–07–0053; FV07–916/917–5 PR]

Nectarines and Peaches Grown in California; Decreased Assessment Rates

AGENCY: Agricultural Marketing Service, USDA.

ACTION: Proposed rule.

SUMMARY: This rule would decrease the assessment rates established for the Nectarine Administrative Committee and the Peach Commodity Committee (committees) for the 2007–08 and subsequent fiscal periods from $0.21 to $0.06 per 25-pound container or container equivalent of nectarines and peaches handled. The committees locally administer the marketing orders that regulate the handling of nectarines and peaches grown in California. Assessments upon nectarine and peach handlers are used by the committees to fund reasonable and necessary expenses of the programs. The fiscal period runs from March 1 through the last day of February. The assessment rates would remain in effect indefinitely unless modified, suspended, or terminated.

DATES: Comments must be received by July 2, 2007.

ADDRESSES: Interested persons are invited to submit written comments concerning this rule. Comments must be sent to the Docket Clerk, Marketing Order Administration Branch, Fruit and Vegetable Programs, AMS, USDA, 1400 Independence Avenue SW., STOP 0237, Washington, DC 20250–0237; Fax: (202) 720–8938; or Internet: *http://www.regulations.gov.* Comments should reference the docket number and the date and page number of this issue of the **Federal Register** and will be made available for public inspection in the Office of the Docket Clerk during regular business hours, or can be viewed at: *http://www.regulations.gov.*

FOR FURTHER INFORMATION CONTACT: Jennifer Garcia, Marketing Specialist, or Kurt Kimmel, Regional Manager, California Marketing Field Office, Marketing Order Administration Branch, Fruit and Vegetable Programs, AMS, USDA; Telephone: (559) 487–5901, Fax: (559) 487–5906; or e-mail: *Jennifer.Garcia3@usda.gov* or *Kurt.Kimmel@usda.gov.*

Small businesses may request information on complying with this regulation by contacting Jay Guerber, Marketing Order Administration Branch, Fruit and Vegetable Programs, AMS, USDA, 1400 Independence Avenue SW., STOP 0237, Washington, DC 20250–0237; Telephone: (202) 720–2491, Fax: (202) 720–8938, or e-mail: *Jay.Guerber@usda.gov.*

SUPPLEMENTARY INFORMATION: This rule is issued under Marketing Order Nos. 916 and 917, both as amended (7 CFR parts 916 and 917), regulating the handling of nectarines and peaches grown in California, respectively, hereinafter referred to as the ''orders.'' The orders are effective under the Agricultural Marketing Agreement Act of 1937, as amended (7 U.S.C. 601–674), hereinafter referred to as the ''Act.''

The Department of Agriculture (USDA) is issuing this rule in conformance with Executive Order 12866.

This rule has been reviewed under Executive Order 12988, Civil Justice Reform. Under the marketing orders now in effect, California nectarine and peach handlers are subject to assessments. Funds to administer the orders are derived from such assessments. It is intended that the assessment rates as proposed herein would be applicable to all assessable nectarines and peaches beginning on March 1, 2007, and continue until amended, suspended, or terminated. This rule will not preempt any State or local laws, regulations, or policies, unless they present an irreconcilable conflict with this rule.

The Act provides that administrative proceedings must be exhausted before parties may file suit in court. Under section 608c(15)(A) of the Act, any handler subject to an order may file with USDA a petition stating that the order, any provision of the order, or any obligation imposed in connection with the order is not in accordance with law and request a modification of the order or to be exempted therefrom. Such handler is afforded the opportunity for a hearing on the petition. After the hearing USDA would rule on the petition. The Act provides that the district court of the United States in any district in which the handler is an inhabitant, or has his or her principal place of business, has jurisdiction to review USDA's ruling on the petition, provided an action is filed not later than 20 days after the date of the entry of the ruling.

This rule would decrease the assessment rates established for the Nectarine Administrative Committee (NAC) and the Peach Commodity Committee (PCC) for the 2007–08 and subsequent fiscal periods from $0.21 to $0.06 per 25-pound container or container equivalent of nectarines and peaches handled.

The nectarine and peach marketing orders provide authority for the committees, with the approval of USDA, to formulate annual budgets of expenses and collect assessments from handlers to administer the programs. The members of NAC and PCC are producers of California nectarines and peaches, respectively. They are familiar with the committees' needs, and with the costs for goods and services in their local area and are, therefore, in a position to formulate appropriate budgets and assessment rates. The assessment rates are formulated and discussed in public meetings. Thus, all directly affected persons have an opportunity to participate and provide input.

NAC Assessment and Expenses

For the 2006–07 fiscal period, the NAC recommended, and USDA approved, an assessment rate of $0.21 per 25-pound container or container equivalent of nectarines that would continue in effect from fiscal period to fiscal period unless modified, suspended, or terminated by USDA upon recommendation and information submitted by the committee or other information available to USDA.

The NAC met on May 1, 2007, and unanimously recommended 2007–08 expenditures of $1,446,654 and an assessment rate of $0.06 per 25-pound container or container equivalent of nectarines. In comparison, the budgeted expenditures for the 2006–07 fiscal period were $4,473,764. The proposed assessment rate of $0.06 per 25-pound container or container equivalent of nectarines is $0.15 lower than the rate currently in effect. Combining expected assessment revenue of $1,140,000 with the $322,051 carryover available from the 2006–07 fiscal period and other income such as interest and research grants should be adequate to meet committee needs. The proposed assessment rate is also likely to provide a $127,133 reserve, which may be used to cover administrative expenses prior to the beginning of the 2008–09 shipping season as provided in the order (§ 916.42).

The NAC recommended a substantially reduced 2007–08 fiscal period budget and assessment rate because promotional activities, as well as portions of the committee's administrative and inspection programs, have been discontinued. A new California State marketing program that will conduct such activities has been implemented. An interim final rule discussing this subject was published on April 16, 2007, in the **Federal Register** at 72 FR 18847.

Expenditures recommended by the NAC for the 2007–08 fiscal period include $262,444 for administration, $37,476 for inspection and compliance, $196,147 for production research, and $950,587 for consumer and category research. Budgeted expenses for these items in 2006–07 were $567,856 for administration; $1,070,832 for inspection; $201,702 for production research; and $2,633,374 for promotions, which included consumer and category research.

The NAC 2007–08 fiscal period assessment rate was derived after considering anticipated fiscal year expenses; estimated assessable nectarines of 19,000,000 25-pound containers or container equivalents; the estimated income from other sources, such as interest; and the need for an adequate financial reserve to carry the NAC into the 2008–09 fiscal period. Therefore, the NAC recommended an assessment rate of $0.06 per 25-pound container or container equivalent.

PCC Assessment and Expenses

For the 2006–07 fiscal period, the PCC recommended, and USDA approved, an assessment rate of $0.21 per 25-pound container or container equivalent of peaches that would continue in effect from fiscal period to fiscal period unless modified, suspended, or terminated by USDA upon recommendation and information submitted by the committee or other information available to USDA.

The PCC met on May 1, 2007, and recommended 2007–08 expenditures of $1,486,971 and an assessment rate of $0.06 per 25-pound container or container equivalent of peaches. In comparison, budgeted expenditures for the 2006–07 fiscal period were $4,988,914. The proposed assessment rate of $0.06 per 25-pound container or container equivalent of peaches is $0.15 lower than the rate currently in effect. Combining expected assessment revenues of $1,200,000 with the $420,386 carryover available from the 2006–07 fiscal period and other income such as interest and research grants should be adequate to meet committee needs. The proposed assessment rate is also likely to provide a $188,222 reserve, which may be used to cover administrative expenses prior to the beginning of the 2008–09 shipping season as provided in the order (§ 917.38).

The PCC recommended a substantially reduced 2007–08 fiscal period budget and assessment rate because promotional activities, as well as portions of the committee's administrative and inspection programs, have been discontinued. A new California State marketing program that will conduct such activities has been implemented. An interim final rule discussing this subject was published on April 16, 2007, in the **Federal Register** at 72 FR 18847.

Expenditures recommended by the PCC for the 2007–08 fiscal period include $267,025 for administration, $87,693 for inspection and compliance, $196,149 for production research, and $936,104 for consumer and category research. Budgeted expenses for these items in 2006–07 were $936,104 for administration; $1,299,211 for inspection; $210,718 for production research; and $2,849,961 for promotions, which included consumer and category research.

The PCC 2007–08 fiscal period assessment rate was derived after considering anticipated fiscal year expenses; estimated assessable peaches of 20,000,000 25-pound containers or container equivalents; the estimated income from other sources, such as interest; and the need for an adequate financial reserve to carry the PCC into the 2008–09 fiscal period. Therefore, the PCC recommended an assessment rate of $0.06 per 25-pound container or container equivalent.

Continuance of Assessment Rates

The proposed assessment rates would continue in effect indefinitely unless modified, suspended, or terminated by USDA upon recommendation and information submitted by the committees or other available information.

Although these assessment rates would be in effect for an indefinite period, the committees would continue to meet prior to or during each fiscal period to recommend budgets of expenses and consider recommendations for modification of the assessment rates. The dates and times of committee meetings are available from the committees' Web site at *http://www.eatcaliforniafruit.com* or USDA. Committee meetings are open to the public and interested persons may express their views at these meetings. USDA would evaluate the committees' recommendations and other available information to determine whether modification of the assessment rate for each committee is needed. Further rulemaking would be undertaken as necessary. The committees' 2007–08 fiscal period budgets and those for subsequent fiscal periods would be reviewed and, as appropriate, approved by USDA.

Initial Regulatory Flexibility Analysis

Pursuant to requirements set forth in the Regulatory Flexibility Act (RFA), the Agricultural Marketing Service (AMS) has considered the economic impact of this rule on small entities. Accordingly, AMS has prepared this initial regulatory flexibility analysis.

The purpose of the RFA is to fit regulatory actions to the scale of business subject to such actions in order that small businesses will not be unduly or disproportionately burdened. Marketing orders issued pursuant to the Act, and the rules issued thereunder, are unique in that they are brought about through group action of essentially small entities acting on their own behalf.

There are approximately 676 producers of nectarines and peaches in the production area and approximately 175 handlers subject to regulation under the orders. Small agricultural producers are defined by the Small Business Administration (13 CFR 121.201) as those having annual receipts of less than $750,000, and small agricultural service firms are defined as those whose annual receipts are less than $6,500,000.

According to the committees' staff, approximately 85 percent of all the handlers within the industry may be classified as small entities. For the 2006 marketing season, staff estimated that the average handler price received was $9.00 per container or container equivalent of nectarines or peaches. A handler would have to ship at least 722,223 containers to have annual receipts of $6,500,000.

Also, the committees' staff has estimated that more than 90 percent of all the producers in the industry may be classified as small entities. For the 2006 marketing season, staff estimated the average producer price received was $4.50 per container or container equivalent for nectarines and peaches. A producer would have to produce at least 166,667 containers of nectarines and peaches to have annual receipts of $750,000.

With an average producer price of $4.50 per container or container equivalent, and a combined packout of nectarines and peaches of 36,388,996 containers, the value of the 2006 packout is estimated to be $163,750,482. Dividing this total estimated grower revenue figure by the estimated number of producers (676) yields an estimate of average revenue per producer of about $242,234 from the sales of peaches and nectarines.

This rule would decrease the assessment rates established for NAC and PCC for the 2007–08 and subsequent fiscal periods from $0.21 to $0.06 per 25-pound container or container equivalent of nectarines or peaches.

The NAC recommended 2007–08 fiscal period expenditures of $1,446,654 for nectarines and an assessment rate of $0.06 per 25-pound container or container equivalent of nectarines. The PCC recommended 2007–08 fiscal period expenditures of $1,486,971 for peaches and an assessment rate of $0.06 per 25-pound container or container equivalent of peaches. The proposed assessment rates of $0.06 are $0.15 lower than the rates currently in effect.

Analysis of NAC Budget

The quantity of assessable nectarines for the 2007–08 fiscal period is estimated at 19,000,000 25-pound containers or container equivalents. Thus, the $0.06 rate should provide $1,140,000 in assessment income.

The major expenditures recommended by the NAC for the 2007–08 year include $262,444 for administration; $37,476 for inspection and compliance; $196,147 for production research; and $950,587 for consumer and category research, which were previously included in the promotions budget. Budgeted expenses for these items in 2006–07 were $567,856, $1,070,832, $201,702, and $2,633,374, respectively.

The NAC recommended a decrease in the assessment rate to meet anticipated 2007–08 expenses and provide a financial reserve of $127,133, which is needed to fund expenses for the following year until assessments for that year are received.

Analysis of PCC Budget

The quantity of assessable peaches for the 2007–08 fiscal year is estimated at 20,000,000 25-pound containers or container equivalents. Thus, the $0.06 rate should provide $1,200,000 in assessment income.

The major expenditures recommended by PCC for the 2007–08 year include $267,025 for administration; $87,693 for inspection and compliance; $196,149 for production research; and $936,104 for consumer and category research, which were previously included in the promotions budget. Budgeted expenses for these items in 2006–07 were $629,024, $1,299,211, $210,718, and $2,849,961, respectively.

The PCC recommended a decrease in the assessment rate to meet anticipated 2007–08 fiscal period expenses and provide a financial reserve of $188,222, which is needed to fund expenses for the following year until assessments for that year are received.

Considerations in Determining Expenses and Assessment Rates

Prior to arriving at these budgets, the committees considered information and recommendations from various sources, including, but not limited to: Their Executive Committee, their Research Subcommittee, their International Programs Subcommittee, their Domestic Promotion Subcommittee, and the Nectarine and Peach Estimating Committees. Because fewer programs will be conducted under the Federal orders during this fiscal year compared to previous years, the committees decided the assessment rates should be reduced to prevent the accumulation of reserves beyond the levels allowed under the orders. Therefore, they recommended decreasing the

assessment rates to $0.06 per 25-pound container or container equivalent. This would allow them to meet their 2007–08 fiscal period expenses and carry over necessary reserves to finance operations before 2008–09 fiscal period assessments are collected.

A review of historical and preliminary information pertaining to the upcoming fiscal period indicates that the grower price for nectarines and peaches for the 2007–08 season could range between $6.00 and $8.00 per 25-pound container or container equivalent. Therefore, the estimated assessment revenue for the 2007–08 fiscal period as a percentage of total grower revenue could range between .75 and 1 percent.

This action would decrease the assessment obligation imposed on handlers. Assessments are applied uniformly on all handlers, and some of the costs may be passed on to producers. However, decreasing the assessment rate would reduce the burden on handlers, and may reduce the burden on producers. In addition, the committees' meetings were widely publicized throughout the California nectarine and peach industries and all interested persons were invited to attend the meetings and were encouraged to participate in the committees' deliberations on all issues. Like all committee meetings, the May 1, 2007, meetings were public meetings and entities of all sizes were able to express views on this issue. Finally, interested persons are invited to submit information on the regulatory and informational impacts of this action on small businesses.

This proposed rule would impose no additional reporting or recordkeeping requirements on either small or large handlers. As with all Federal marketing order programs, reports and forms are periodically reviewed to reduce information requirements and duplication by industry and public sector agencies.

The AMS is committed to complying with the E-Government Act, to promote the use of the Internet and other information technologies to provide increased opportunities for citizen access to Government information and services, and for other purposes.

USDA has not identified any relevant Federal rules that duplicate, overlap, or conflict with this rule.

A small business guide on complying with fruit, vegetable, and specialty crop marketing agreements and orders may be viewed at: *http://www.ams.usda.gov/fv/moab.html.* Any questions about the compliance guide should be sent to Jay Guerber at the previously mentioned address in the **FOR FURTHER INFORMATION CONTACT** section.

A 10-day comment period is provided to allow interested persons to respond to this proposed rule. Ten days is deemed appropriate because: (1) The 2007–08 fiscal period began on March 1, 2007, and the marketing orders require that the rates of assessment for each fiscal period apply to all assessable nectarines and peaches handled during such fiscal period; (2) the proposed rule would decrease the assessment rates for assessable nectarines and peaches beginning with the 2007–08 fiscal period; and (3) handlers are aware of this action, which was discussed by the committees at public meetings and recommended at their meetings on May 1, 2007, and is similar to other assessment rate actions issued in past years.

List of Subjects

7 CFR Part 916

Marketing agreements, Nectarines, Reporting and recordkeeping requirements.

7 CFR Part 917

Marketing agreements, Peaches, Pears, Reporting and recordkeeping requirements.

For the reasons set forth in the preamble, 7 CFR parts 916 and 917 are proposed to be amended as follows:

1. The authority citation for 7 CFR parts 916 and 917 continues to read as follows:

Authority: 7 U.S.C. 601–674.

PART 916—NECTARINES GROWN IN CALIFORNIA

2. Section 916.234 is revised to read as follows:

§ 916.234 Assessment rate.

On and after March 1, 2007, an assessment rate of $0.06 per 25-pound container or container equivalent of nectarines is established for California nectarines.

PART 917—PEACHES GROWN IN CALIFORNIA

3. Section 917.258 is revised to read as follows:

§ 917.258 Assessment rate.

On and after March 1, 2007, an assessment rate of $0.06 per 25-pound container or container equivalent of peaches is established for California peaches.

Dated: June 13, 2007.

Lloyd C. Day,

Administrator, Agricultural Marketing Service.

[FR Doc. E7–11822 Filed 6–19–07; 8:45 am]

BILLING CODE 3410–02–P

DEPARTMENT OF AGRICULTURE

Agricultural Marketing Service

7 CFR Part 923

[Docket No. AMS–FV–07–0073; FV07–923–1 PR]

Sweet Cherries Grown in Designated Counties in Washington; Decreased Assessment Rate

AGENCY: Agricultural Marketing Service, USDA.

ACTION: Proposed rule.

SUMMARY: This rule would decrease the assessment rate established for the Washington Cherry Marketing Committee (Committee) for the 2007–2008 and subsequent fiscal periods from $0.50 to $0.40 per ton for Washington sweet cherries handled. The Committee is responsible for local administration of the marketing order regulating the handling of sweet cherries grown in designated counties in Washington. Assessments upon handlers of sweet cherries are used by the Committee to fund reasonable and necessary expenses of the program. The fiscal period for the marketing order begins April 1 and ends March 31. The assessment rate would remain in effect indefinitely unless modified, suspended or terminated.

DATES: Comments must be received by July 2, 2007.

ADDRESSES: Interested persons are invited to submit written comments regarding this rule. Comments must be sent to the Docket Clerk, Marketing Order Administration Branch, Fruit and Vegetable Programs, AMS, USDA, 1400 Independence Avenue SW., STOP 0237, Washington, DC 20250–0237; Fax: (202) 720–8938; or Internet: *http://www.regulations.gov.* Comments should reference the docket number and the date and page number of this issue of the **Federal Register** and will be available for public inspection in the Office of the Docket Clerk during regular business hours, or can be viewed at: *http://www.regulations.gov.*

FOR FURTHER INFORMATION CONTACT: Robert J. Curry or Gary D. Olson, Northwest Marketing Field Office, Marketing Order Administration Branch, Fruit and Vegetable Programs, AMS, USDA, 1220 SW Third Avenue,

Suite 385, Portland, OR 97204; Telephone: (503) 326–2724; Fax: (503) 326–7440; or e-mail: *Robert.Curry@usda.gov* or *GaryD.Olson@usda.gov.*

Small businesses may request information on complying with this regulation by contacting Jay Guerber, Marketing Order Administration Branch, Fruit and Vegetable Programs, AMS, USDA, 1400 Independence SW., STOP 0237, Washington, DC 20250–0237; Telephone: (202) 720–2491; Fax: (202) 720–8938; or e-mail: *Jay.Guerber@usda.gov.*

SUPPLEMENTARY INFORMATION: This rule is issued under Marketing Order No. 923 (7 CFR part 923), as amended, regulating the handling of sweet cherries grown in designated counties in Washington, hereinafter referred to as the ''order.'' The order is effective under the Agricultural Marketing Agreement Act of 1937, as amended (7 U.S.C. 601–674), hereinafter referred to as the ''Act.''

The Department of Agriculture (USDA) is issuing this rule in conformance with Executive Order 12866.

This rule has been reviewed under Executive Order 12988, Civil Justice Reform. Under the marketing order now in effect, cherry handlers in designated counties in Washington are subject to assessments. Funds to administer the order are derived from such assessments. It is intended that the assessment rate as issued herein will be applicable to all assessable Washington sweet cherries beginning April 1, 2007, and continue until amended, suspended, or terminated. This rule will not preempt any State or local laws, regulations, or policies, unless they present an irreconcilable conflict with this rule.

The Act provides that administrative proceedings must be exhausted before parties may file suit in court. Under section 608c(15)(A) of the Act, any handler subject to an order may file with USDA a petition stating that the order, any provision of the order, or any obligation imposed in connection with the order is not in accordance with law and request a modification of the order or to be exempted therefrom. Such handler is afforded the opportunity for a hearing on the petition. After the hearing USDA would rule on the petition. The Act provides that the district court of the United States in any district in which the handler is an inhabitant, or has his or her principal place of business, has jurisdiction to review USDA's ruling on the petition, provided an action is filed not later than 20 days after the date of the entry of the ruling.

This rule would decrease the assessment rate established for the Committee for the 2007–2008 and subsequent fiscal periods from $0.50 to $0.40 per ton for Washington sweet cherries handled under the order.

The order provides authority for the Committee, with the approval of USDA, to formulate an annual budget of expenses and collect assessments from handlers to administer the program. The members of the Committee are producers and handlers of sweet cherries in designated counties in Washington. They are familiar with the Committee's needs and with the costs for goods and services in their local area and are thus in a position to formulate an appropriate budget and assessment rate. The assessment rate is formulated and discussed at a public meeting. Thus, all directly affected persons have an opportunity to participate and provide input.

For the 2006–2007 and subsequent fiscal periods, the Committee recommended, and the USDA approved, an assessment rate of $0.50 per ton of sweet cherries handled. This rate continues in effect from fiscal period to fiscal period unless modified, suspended, or terminated by USDA upon recommendation and information submitted by the Committee or other information available to USDA.

The Committee met on May 2, 2007, and unanimously recommended 2007–2008 expenditures of $71,600. In comparison, last year's budgeted expenditures were $49,800. In addition, the Committee recommended that the current $0.50 per ton assessment rate be decreased by $0.10 to $0.40 per ton of sweet cherries handled. The Committee recommended the lower assessment rate for the purpose of decreasing the monetary reserve, which is approximately $83,792. Funds in the reserve must be kept within the maximum permitted by the order of approximately one fiscal period's operational expenses (7 CFR 923.42).

The major expenditures recommended by the Committee for the 2007–2008 fiscal period include $22,500 for administration and data management fees, $36,500 for Committee expenses such as travel, accounting and compliance, and $7,600 for office expenses—including bonds, insurance, telephone, office equipment and supplies. Budgeted expenses for these items in 2006–2007 were $25,000, $16,200, and $7,100, respectively. Higher expenses are anticipated this season due to a producer survey and other regulatory research expenses requested by the Committee, as well as the associated increase in staff costs.

The assessment rate recommended by the Committee was derived by dividing anticipated expenses by expected shipments of Washington sweet cherries. Applying the $0.40 per ton rate of assessment to the Committee's 120,000 ton crop estimate should provide $48,000 in assessment income. Income derived from handler assessments, along with interest income and approximately $23,600 from the Committee's reserve, would be adequate to cover budgeted expenses. While there is currently about $83,792 in the monetary reserve, the Committee estimates that with the adoption of this proposed rule this fund will have approximately $60,267 in it on March 31, 2008.

The proposed assessment rate would continue in effect indefinitely unless modified, suspended, or terminated by USDA upon recommendation and information submitted by the Committee or other available information.

Although this assessment rate would be effective for an indefinite period, the Committee would continue to meet prior to or during each fiscal period to recommend a budget of expenses and consider recommendations for modification of the assessment rate. The dates and times of the Committee's meetings are available from the Committee or USDA. The Committee's meetings are open to the public and interested persons may express their views at these meetings. USDA will evaluate the Committee's recommendations and other available information to determine whether modification of the assessment rate is needed. Further rulemaking will be undertaken as necessary. The Committee's 2007–2008 budget and those for subsequent fiscal periods will be reviewed and, as appropriate, approved by USDA.

Initial Regulatory Flexibility Analysis

Pursuant to requirements set forth in the Regulatory Flexibility Act (RFA), the Agricultural Marketing Service (AMS) has considered the economic impact of this rule on small entities. Accordingly, AMS has prepared this initial regulatory flexibility analysis.

The purpose of the RFA is to fit regulatory actions to the scale of business subject to such actions in order that small businesses will not be unduly or disproportionately burdened. Marketing orders issued pursuant to the Act, and the rules issued thereunder, are unique in that they are brought about through group action of essentially

small entities acting on their own behalf.

There are approximately 1,500 cherry producers within the regulated production area and approximately 53 regulated handlers. Small agricultural producers are defined by the Small Business Administration (13 CFR 121.201) as those having annual receipts of less than $750,000, and small agricultural service firms are defined as those whose annual receipts are less than $6,500,000.

The Washington Agricultural Statistics Service has prepared a preliminary report for the 2006 shipping season showing that the sweet cherry fresh market utilization of 136,000 tons sold for an average of $2,000 per ton. Based on the number of producers in the production area (1,500), the average producer revenue from the sale of sweet cherries in 2006 can therefore be estimated at approximately $181,333 per year. In addition, the Committee reports that most of the industry's 53 handlers would have each averaged gross receipts of less than $6,500,000 from the sale of fresh sweet cherries last season. Thus, the majority of producers and handlers of Washington sweet cherries may be classified as small entities.

This rule would decrease the assessment rate established for the Committee and collected from handlers for the 2007–2008 and subsequent fiscal periods from $0.50 to $0.40 per ton for sweet cherries. The Committee also unanimously recommended 2007–2008 expenditures of $71,600. With the 2007–2008 Washington sweet cherry crop estimate of 120,000 tons, the Committee anticipates assessment income of $48,000. The Committee recommended the assessment rate decrease for the purpose of decreasing the monetary reserve, which is approximately $83,792. With this proposed assessment rate and budget, the Committee may need to draw up to $23,600 from its monetary reserve, thus helping to decrease the reserve to a level that is less than approximately one fiscal period's operating expenses, the maximum permitted by the order.

The major expenditures recommended by the Committee for the 2007–2008 fiscal period include $22,500 for administration and data management fees, $36,500 for Committee expenses, and $7,600 for office expenses. Budgeted expenses for these items in 2006–2007 were $25,000, $16,200, and $7,100, respectively.

The Committee discussed alternatives to this rule. Leaving the assessment rate at the current $0.50 per ton was initially considered, but not recommended because of the Committee's desire to decrease the level of the monetary reserve so that it is not more than approximately one fiscal period's operational expenses.

A review of historical information and preliminary information pertaining to the upcoming crop year indicates that the producer price for the 2007–2008 season could average about $2,000 per ton for fresh Washington sweet cherries. Therefore, the estimated assessment revenue for the 2007–2008 fiscal period as a percentage of total producer revenue is 0.02 percent for Washington sweet cherries.

This action would decrease the assessment obligation imposed on handlers. Assessments are applied uniformly on all handlers, and some of the costs may be passed on to producers. However, decreasing the assessment rate reduces the burden on handlers, and may reduce the burden on producers.

In addition, the Committee's meeting was widely publicized throughout the Washington sweet cherry industry and all interested persons were invited to attend and participate in Committee deliberations on all issues. Like all Committee meetings, the May 2, 2007, meeting was a public meeting and all entities, both large and small, were able to express views on the issues. Finally, interested persons are invited to submit comments on this proposed rule, including the regulatory and informational impacts of this action on small businesses.

This proposed rule would impose no additional reporting or recordkeeping requirements on either small or large Washington sweet cherry handlers. As with all Federal marketing order programs, reports and forms are periodically reviewed to reduce information requirements and duplication by industry and public sector agencies. Furthermore, USDA has not identified any relevant Federal rules that duplicate, overlap, or conflict with this rule.

The AMS is committed to complying with the E-Government Act, to promote the use of the Internet and other information technologies to provide increased opportunities for citizen access to Government information and services, and for other purposes.

A small business guide on complying with fruit, vegetable, and specialty crop marketing agreements and order may be viewed at: *http://www.ams.usda.gov/fv/moab.html.* Any questions about the compliance guide should be sent to Jay Guerber at the previously mentioned address in the **FOR FURTHER INFORMATION CONTACT** section.

A 10-day comment period is provided to allow interested persons to respond to this proposed rule. Ten days is deemed appropriate because: (1) This rule would decrease the assessment rate, and thus also would decrease the burden on handlers; (2) the 2007–2008 fiscal period began on April 1, 2007, and the order requires that the rate assessment for each fiscal period apply to all assessable sweet cherries handled during such fiscal period; (3) the Washington sweet cherry harvest and shipping season is expected to begin as early as the last week of May; (4) the Committee needs to have sufficient funds to pay its expenses which are incurred on a continuous basis; and (5) handlers are aware of this action which was recommended by the Committee at a public meeting and is similar to other assessment rate actions issued in past years.

List of Subjects in 7 CFR Part 923

Cherries, Marketing agreements, Reporting and recordkeeping requirements.

For the reasons set forth in the preamble, 7 CFR part 923 is proposed to be amended as follows:

PART 923—SWEET CHERRIES GROWN IN DESIGNATED COUNTIES IN WASHINGTON

1. The authority citation for 7 CFR part 923 continues to read as follows:

Authority: 7 U.S.C. 601–674.

2. Section 923.236 is revised to read as follows:

§ 923.236 Assessment rate.

On and after April 1, 2007, an assessment rate of $0.40 per ton is established for the Washington Cherry Marketing Committee.

Dated: June 13, 2007.

Lloyd C. Day,

Administrator, Agricultural Marketing Service.

[FR Doc. E7–11820 Filed 6–19–07; 8:45 am]

BILLING CODE 3410–02–P

DEPARTMENT OF TRANSPORTATION

Federal Aviation Administration

14 CFR Parts 23, 25, 33, and 35

[Docket No. FAA–2007–27310; Notice No. 07–04]

RIN 2120–AI95

Airworthiness Standards; Propellers; Reopening of Comment Period

AGENCY: Federal Aviation Administration (FAA), DOT.

ACTION: Notice of proposed rulemaking (NPRM); reopening of comment period.

SUMMARY: On April 11, 2007, the FAA published a Notice of Proposed Rulemaking (NPRM) regarding the revision of airworthiness standards for the issuance of original and amended type certificates for airplane propellers. The comment period closed on June 11, 2007. However, the FAA is reopening the comment period for an additional 45 days in response to requests from McCauley Propeller Systems, Hartzell Propeller, Inc., and the General Aviation Manufacturers Association. The reopening of the comment period is needed to permit these companies, and other affected parties, additional time to develop comments responsive to the NPRM.

DATES: The comment period for the NPRM published on April 11, 2007 (72 FR 18136) closed June 11, 2007, and is reopened until August 6, 2007.

ADDRESSES: You may send comments identified by Docket Number FAA–2007–27310 using any of the following methods:

- *DOT Docket Web site:* Go to *http://dms.dot.gov* and follow the instructions for sending your comments electronically.
- *Government-wide rulemaking Web site:* Go to *http://www.regulations.gov* and follow the instructions for sending your comments electronically.
- *Mail:* Send comments to the Docket Management Facility; U.S. Department of Transportation, 1200 New Jersey Avenue, SE., West Building Ground Floor, Room W12–140, Washington, DC 20590.
- *Fax:* Fax comments to the Docket Management Facility at 202–493–2251.
- *Hand Delivery:* Bring comments to the Docket Management Facility in Room W12–140 of the West Building Ground Floor at 1200 New Jersey Avenue, SE., Washington, DC, between 9 a.m. and 5 p.m., Monday through Friday, except Federal holidays.

For more information on the rulemaking process, see the **SUPPLEMENTARY INFORMATION** section of this document.

Privacy: We will post all comments we receive, without change, to *http://dms.dot.gov,* including any personal information you provide. Using the search function of our docket Web site, anyone can find and read the comments received into any of our dockets, including the name of the individual sending the comment (or signing the comment for an association, business, labor union, etc.). You may review DOT's complete Privacy Act Statement in the **Federal Register** published on April 11, 2000 (65 FR 19477–78).

Docket: To read background documents or comments received, go to *http://dms.dot.gov* at any time or to the Docket Management Facility in Room W12–140 of the West Building Ground Floor at 1200 New Jersey Avenue, SE., Washington, DC, between 9 a.m. and 5 p.m., Monday through Friday, except Federal holidays.

FOR FURTHER INFORMATION CONTACT: Jay Turnberg, Engine and Propeller Directorate Standards Staff, ANE–110, Federal Aviation Administration, 12 New England Executive Park, Burlington, Massachusetts 01803–5299; telephone (781) 238–7116; facsimile (781) 238–7199, e-mail: *jay.turnberg@faa.gov.*

SUPPLEMENTARY INFORMATION:

Comments Invited

The FAA invites interested persons to participate in this rulemaking by submitting written comments, data, or views. We also invite comments relating to the economic, environmental, energy, or federalism impacts that might result from adopting the proposals in this document. The most helpful comments reference a specific portion of the proposal, explain the reason for any recommended change, and include supporting data. To ensure the docket does not contain duplicate comments, please send only one copy of written comments, or if you are filing comments electronically, please submit your comments only one time.

We will file in the docket all comments we receive, as well as a report summarizing each substantive public contact with FAA personnel concerning this proposed rulemaking. Before acting on this proposal, we will consider all comments we receive on or before the closing date for comments. We will consider comments filed after the comment period has closed if it is possible to do so without incurring expense or delay. We may change this proposal in light of the comments we receive.

Proprietary or Confidential Business Information

Do not file in the docket information that you consider to be proprietary or confidential business information. Send or deliver this information directly to the person identified in the **FOR FURTHER INFORMATION CONTACT** section of this document. You must mark the information that you consider proprietary or confidential. If you send the information on a disk or CD–ROM, mark the outside of the disk or CD–ROM and also identify electronically within the disk or CD–ROM the specific information that is proprietary or confidential.

Under 14 CFR 11.35(b), when we are aware of proprietary information filed with a comment, we do not place it in the docket. We hold it in a separate file to which the public does not have access, and place a note in the docket that we have received it. If we receive a request to examine or copy this information, we treat it as any other request under the Freedom of Information Act (5 U.S.C. 552). We process such a request under the DOT procedures found in 49 CFR part 7.

Availability of Rulemaking Documents

You can get an electronic copy using the Internet by:

(1) Searching the Department of Transportation's electronic Docket Management System (DMS) web page (*http://dms.dot.gov/search*);

(2) Visiting the Office of Rulemaking's web page at *http://www.faa.gov/avr/arm/index.cfm;* or

(3) Accessing the Government Printing Office's web page at *http://www.gpoaccess.gov/fr/index.html.*

You can also get a copy by sending a request to the Federal Aviation Administration, Office of Rulemaking, ARM–1, 800 Independence Avenue, SW., Washington, DC 20591, or by calling (202) 267–9680. Make sure to identify the docket number, notice number, or amendment number of this rulemaking.

Background

On April 11, 2007, the FAA published in the **Federal Register** (72 FR 18136) Notice No. 07–05, Airworthiness Standards; Propellers. This proposed rule would revise the airworthiness standards for the issuance of original and amended type certificates for airplane propellers. The proposed standards would address the current advances in technology and harmonize FAA and European Aviation Safety Agency propeller certification requirements, thereby simplifying

airworthiness approvals for imports and exports. The comment period closed on June 11, 2007.

By requests dated May 3, May 31, and June 6, Hartzell Propeller, Inc. (Hartzell), McCauley Propeller Systems (McCauley), and the General Aviation Manufacturers Association (GAMA), respectively, asked that the comment period be extended by 60 days to permit a more careful review and consideration of the proposed rule.

The FAA has determined that reopening the comment period for 45 days will allow Hartzell, McCauley, GAMA, and others sufficient time for a more thorough review of applicable issues and questions raised by the NPRM, and for the drafting of responsive comments.

In order, therefore, to give all interested persons additional time to complete their comments, the FAA finds that it is in the public interest to reopen the comment period for forty-five (45) days.

Issued in Washington, DC, on June 14, 2007.

Dorenda D. Baker,

Deputy Director, Aircraft Certification Service.

[FR Doc. 07–3050 Filed 6–15–07; 4:02 pm]

BILLING CODE 4910–13–P

DEPARTMENT OF TRANSPORTATION

Federal Aviation Administration

14 CFR Part 39

[Docket No. 2003–NM–67–AD]

RIN 2120–AA64

Airworthiness Directives; Empresa Brasileira de Aeronautica S.A. (EMBRAER) Model EMB–135 and EMB–145 Series Airplanes

AGENCY: Federal Aviation Administration, DOT.

ACTION: Proposed rule; withdrawal.

SUMMARY: This action withdraws a notice of proposed rulemaking (NPRM) that proposed a new airworthiness directive (AD), applicable to certain EMBRAER Model EMB–135 and EMB–145 series airplanes. That action would have required an inspection of the base and support surfaces of the glide slope antenna and of certain electrical connectors of the navigation system, and applicable corrective actions if necessary. Since the issuance of the NPRM, we have received new data showing that the proposed inspection and corrective actions will not eliminate the display of erroneous or misleading information to the flightcrew in the cockpit. However, we have been informed that the navigation system manufacturer has developed effective corrective actions to address the unsafe condition identified in the NPRM. Since we issued the NPRM, we have issued other rulemaking, which provides corrective actions for the identified unsafe condition. Accordingly, the proposed rule is withdrawn.

FOR FURTHER INFORMATION CONTACT: Todd Thompson, Aerospace Engineer, International Branch, ANM–116, FAA, Transport Airplane Directorate, 1601 Lind Avenue SW., Renton, Washington 98057–3356; telephone (425) 227–1175; fax (425) 227–1149.

SUPPLEMENTARY INFORMATION: A proposal to amend part 39 of the Federal Aviation Regulations (14 CFR part 39) to add a new airworthiness directive (AD), applicable to certain EMBRAER Model EMB–135 and EMB–145 series airplanes, was published in the **Federal Register** as a Notice of Proposed Rulemaking (NPRM) on March 11, 2004 (69 FR 11549). The proposed rule would have required an inspection of the base and support surfaces of the glide slope antenna and of certain electrical connectors of the navigation system, and applicable corrective actions if necessary. That action resulted from reports of degradation in the performance of the VOR/ILS/MB system due to the presence of moisture, dirt, and corrosion between the base and the support of the glide slope antenna and in the electrical connectors of the navigation system. The proposed actions were intended to prevent the display of erroneous or misleading information to the flightcrew in the cockpit due to degradation in the performance of the VOR/ILS/HM system.

Actions That Occurred Since the NPRM Was Issued

Since the issuance of that NPRM, we have received new data showing that the degradation in the performance of the VOR/ILS/MB system was not caused by dirt and corrosion affecting the glide slope antenna and certain navigation system connectors. The degraded performance was caused by a parasitic oscillation affecting an internal module of the navigation system, and the navigation system manufacturer has provided service information detailing proven corrective actions. Accordingly, we issued AD 2006–22–05 (71 FR 62907, October 27, 2006), which superseded AD 2003–04–06, amendment 39–13054 (68 FR 8539, February 24, 2003). AD 2006–22–05 provides terminating action for the unsafe condition described in AD 2003–04–06, which was also addressed by the previously mentioned NPRM, Docket No. 2003–NM–67–AD. Therefore, that NPRM is redundant.

FAA's Conclusions

Upon further consideration, we have determined that the proposed rule is not necessary. Accordingly, the NPRM is hereby withdrawn.

Withdrawal of this NPRM constitutes only such action, and does not preclude the agency from issuing another action in the future, nor does it commit the agency to any course of action in the future.

Regulatory Impact

Since this action only withdraws a notice of proposed rulemaking, it is neither a proposed nor a final rule and therefore is not covered under Executive Order 12866, the Regulatory Flexibility Act, or DOT Regulatory Policies and Procedures (44 FR 11034, February 26, 1979).

List of Subjects in 14 CFR Part 39

Air transportation, Aircraft, Aviation safety, Safety.

The Withdrawal

Accordingly, the notice of proposed rulemaking, Docket 2003–NM–67–AD, published in the **Federal Register** on March 11, 2004 (69 FR 11549), is withdrawn.

Issued in Renton, Washington, on June 13, 2007.

Ali Bahrami,

Manager, Transport Airplane Directorate, Aircraft Certification Service.

[FR Doc. E7–11928 Filed 6–19–07; 8:45 am]

BILLING CODE 4910–13–P

DEPARTMENT OF TRANSPORTATION

Federal Aviation Administration

14 CFR Part 39

[Docket No. FAA–2007–28376; Directorate Identifier 2007–NM–108–AD]

RIN 2120–AA64

Airworthiness Directives; Boeing Model 767–200, –300, and –300F Series Airplanes

AGENCY: Federal Aviation Administration (FAA), Department of Transportation (DOT).

ACTION: Notice of proposed rulemaking (NPRM).

SUMMARY: The FAA proposes to adopt a new airworthiness directive (AD) for

certain Boeing Model 767–200, –300, and –300F series airplanes. This proposed AD would require a one-time inspection of each fuel quantity indication system (FQIS) wire harness connector for corrosion of the shield-to-backshell connection, corrosion on the ground jumper, and damage to the ground jumper; a loop resistance test of each FQIS wire harness; and related investigative and corrective actions if necessary. This proposed AD results from reports of corrosion of the out-tank wire harness of the spar connector backshell for the FQIS. We are proposing this AD to detect and correct corrosion of the out-tank wire harness, which could prevent correct grounding of the lightning shield and result in total loss of the electrical grounding between the lightning shield and the airplane structure. This condition, in combination with flammable fuel vapors, could result in fuel tank explosions and consequent loss of the airplane.

DATES: We must receive comments on this proposed AD by August 6, 2007.

ADDRESSES: Use one of the following addresses to submit comments on this proposed AD.

- *DOT Docket Web site:* Go to *http://dms.dot.gov* and follow the instructions for sending your comments electronically.
- *Government-wide rulemaking Web site:* Go to *http://www.regulations.gov* and follow the instructions for sending your comments electronically.
- *Mail:* U.S. Department of Transportation, Docket Operations, M–30, West Building Ground Floor, Room W12–140, 1200 New Jersey Avenue, SE., Washington, DC 20590.
- *Fax:* (202) 493–2251.
- *Hand Delivery:* Room W12–140 on the ground floor of the West Building, 1200 New Jersey Avenue, SE., Washington, DC, between 9 a.m. and 5 p.m., Monday through Friday, except Federal holidays.

Contact Boeing Commercial Airplanes, P.O. Box 3707, Seattle, Washington 98124–2207, for the service information identified in this proposed AD.

FOR FURTHER INFORMATION CONTACT: Philip Sheridan, Aerospace Engineer, Systems and Equipment Branch, ANM–130S, FAA, Seattle Aircraft Certification Office, 1601 Lind Avenue, SW., Renton, Washington 98057–3356; telephone (425) 917–6441; fax (425) 917–6590.

SUPPLEMENTARY INFORMATION:

Comments Invited

We invite you to submit any relevant written data, views, or arguments regarding this proposed AD. Send your comments to an address listed in the **ADDRESSES** section. Include the docket number ''FAA–2007–28376; Directorate Identifier 2007–NM–108–AD'' at the beginning of your comments. We specifically invite comments on the overall regulatory, economic, environmental, and energy aspects of the proposed AD. We will consider all comments received by the closing date and may amend the proposed AD in light of those comments.

We will post all comments we receive, without change, to *http://dms.dot.gov,* including any personal information you provide. We will also post a report summarizing each substantive verbal contact with FAA personnel concerning this proposed AD. Using the search function of that web site, anyone can find and read the comments in any of our dockets, including the name of the individual who sent the comment (or signed the comment on behalf of an association, business, labor union, etc.). You may review DOT's complete Privacy Act Statement in the **Federal Register** published on April 11, 2000 (65 FR 19477–78), or you may visit *http://dms.dot.gov.*

Examining the Docket

You may examine the AD docket on the Internet at *http://dms.dot.gov,* or in person at the Docket Operations office between 9 a.m. and 5 p.m., Monday through Friday, except Federal holidays. The Docket Operations office (telephone (800) 647–5527) is located on the ground floor of the West Building at the street address stated in the **ADDRESSES** section. Comments will be available in the AD docket shortly after the Docket Management System receives them.

Discussion

There have been several reports of corrosion of the out-tank wire harness of the spar connector backshell for the fuel quantity indication system (FQIS). Investigations by the airplane manufacturer and the wire harness supplier found that the corrosion was caused by moisture at the connection between the lightning shield, a tin-plated copper braid, and the aluminum backshell. The moisture wicked up the copper braid and was trapped between the ferrule and the backshell. Corrosion of the out-tank wire harness, if not detected and corrected, could prevent correct grounding of the lightning shield and result in total loss of the electrical grounding between the lightning shield and the airplane structure. This condition, in combination with flammable fuel vapors, could result in fuel tank explosions and consequent loss of the airplane.

Relevant Service Information

We have reviewed Boeing Special Attention Service Bulletin 767–28–0087, dated February 5, 2007. The service bulletin describes procedures for a detailed inspection of each FQIS wire harness connector for corrosion of the shield-to-backshell connection, corrosion on the ground jumper, and damage to the ground jumper. The service bulletin also describes procedures for corrective action if necessary. The corrective action is either upgrading the wire harness by installing a backshell assembly upgrade kit, or replacing the wire harness with a new wire harness that has an improved backshell.

The service bulletin also describes procedures for a loop resistance test of each FQIS wire harness, and the following related investigative and corrective actions if necessary.

- If the resistance is lower than certain limits specified in the service bulletin, the procedures include a detailed inspection for damage of the wire harness between the spar connector and the wheel well ground terminals; and repair or replacement if necessary.
- If the resistance is higher than certain limits specified in the service bulletin, the procedures include doing a joint resistance test of the rear spar ground jumper, and troubleshooting and repairing the ground jumper connection if necessary.

Accomplishing the actions specified in the service information is intended to adequately address the unsafe condition.

The special attention service bulletin refers to Cinch Service Bulletin CN1156–28–02, Revision C, dated July 31, 2006, as an additional source of service information for installing a backshell assembly upgrade kit and replacing the wire harness.

FAA's Determination and Requirements of the Proposed AD

We have evaluated all pertinent information and identified an unsafe condition that is likely to exist or develop on other airplanes of this same type design. For this reason, we are proposing this AD, which would require accomplishing the actions specified in the service information described previously.

Costs of Compliance

There are about 482 airplanes of the affected design in the worldwide fleet. The following table provides the

estimated costs for U.S. operators to comply with this proposed AD.

ESTIMATED COSTS

Action	Work hours	Average labor rate per hour	Cost per airplane	Number of U.S.-registered airplanes	Fleet cost
Detailed inspection	1	$80	$80	202	$16,160.
Loop resistance test	2 to 3	$80	$160 to $240	202	$32,320 to $48,480.

Authority for This Rulemaking

Title 49 of the United States Code specifies the FAA's authority to issue rules on aviation safety. Subtitle I, Section 106, describes the authority of the FAA Administrator. Subtitle VII, Aviation Programs, describes in more detail the scope of the Agency's authority.

We are issuing this rulemaking under the authority described in Subtitle VII, Part A, Subpart III, Section 44701, ''General requirements.'' Under that section, Congress charges the FAA with promoting safe flight of civil aircraft in air commerce by prescribing regulations for practices, methods, and procedures the Administrator finds necessary for safety in air commerce. This regulation is within the scope of that authority because it addresses an unsafe condition that is likely to exist or develop on products identified in this rulemaking action.

Regulatory Findings

We have determined that this proposed AD would not have federalism implications under Executive Order 13132. This proposed AD would not have a substantial direct effect on the States, on the relationship between the national Government and the States, or on the distribution of power and responsibilities among the various levels of government.

For the reasons discussed above, I certify that the proposed regulation:

1. Is not a ''significant regulatory action'' under Executive Order 12866;

2. Is not a ''significant rule'' under the DOT Regulatory Policies and Procedures (44 FR 11034, February 26, 1979); and

3. Will not have a significant economic impact, positive or negative, on a substantial number of small entities under the criteria of the Regulatory Flexibility Act.

We prepared a regulatory evaluation of the estimated costs to comply with this proposed AD and placed it in the AD docket. See the **ADDRESSES** section for a location to examine the regulatory evaluation.

List of Subjects in 14 CFR Part 39

Air transportation, Aircraft, Aviation safety, Safety.

The Proposed Amendment

Accordingly, under the authority delegated to me by the Administrator, the FAA proposes to amend 14 CFR part 39 as follows:

PART 39—AIRWORTHINESS DIRECTIVES

1. The authority citation for part 39 continues to read as follows:

Authority: 49 U.S.C. 106(g), 40113, 44701.

§ 39.13 [Amended]

2. The Federal Aviation Administration (FAA) amends § 39.13 by adding the following new airworthiness directive (AD):

Boeing: Docket No. FAA–2007–28376; Directorate Identifier 2007–NM–108–AD.

Comments Due Date

(a) The FAA must receive comments on this AD action by August 6, 2007.

Affected ADs

(b) None.

Applicability

(c) This AD applies to Boeing Model 767–200, –300, and –300F series airplanes, certificated in any category; as identified in Boeing Special Attention Service Bulletin 767–28–0087, dated February 5, 2007.

Unsafe Condition

(d) This AD results from reports of corrosion of the out-tank wire harness of the spar connector backshell for the fuel quantity indication system (FQIS). We are issuing this AD to detect and correct corrosion of the out-tank wire harness, which could prevent correct grounding of the lightning shield and result in total loss of the electrical grounding between the lightning shield and the airplane structure. This condition, in combination with flammable fuel vapors, could result in fuel tank explosions and consequent loss of the airplane.

Compliance

(e) You are responsible for having the actions required by this AD performed within the compliance times specified, unless the actions have already been done.

Inspection, Test, and Related Investigative and Corrective Actions

(f) Within 48 months after the effective date of this AD, do the actions in paragraphs (f)(1) and (f)(2) of this AD, and do all applicable related investigative and corrective actions, by accomplishing all the actions specified in the Accomplishment Instructions of Boeing Special Attention Service Bulletin 767–28–0087, dated February 5, 2007. Do all applicable related investigative and corrective actions before further flight.

(1) A detailed inspection of each FQIS wire harness connector for corrosion of the shield-to-backshell connection, corrosion on the ground jumper, and damage to the ground jumper.

(2) A loop resistance test of each FQIS wire harness.

Note 1: Boeing Special Attention Service Bulletin 767–28–0087, dated February 5, 2007, refers to Cinch Service Bulletin CN1156–28–02, Revision C, dated July 31, 2006, as an additional source of service information for installing a backshell assembly upgrade kit, and replacing the wire harness.

Alternative Methods of Compliance (AMOCs)

(g)(1) The Manager, Seattle Aircraft Certification Office, FAA, has the authority to approve AMOCs for this AD, if requested in accordance with the procedures found in 14 CFR 39.19.

(2) To request a different method of compliance or a different compliance time for this AD, follow the procedures in 14 CFR 39.19. Before using any approved AMOC on any airplane to which the AMOC applies, notify your appropriate principal inspector (PI) in the FAA Flight Standards District Office (FSDO), or lacking a PI, your local FSDO.

Issued in Renton, Washington, on June 13, 2007.

Ali Bahrami,

Manager, Transport Airplane Directorate, Aircraft Certification Service.

[FR Doc. E7–11926 Filed 6–19–07; 8:45 am]

BILLING CODE 4910–13–P

DEPARTMENT OF TRANSPORTATION

Federal Aviation Administration

14 CFR Part 39

[Docket No. FAA–2007–27010; Directorate Identifier 2006–NM–259–AD]

RIN 2120–AA64

Airworthiness Directives; Airbus Model A300 Airplanes; Model A310 Airplanes; and Model A300 B4–600, B4–600R, and F4–600R Series Airplanes, and Model C4–605R Variant F Airplanes (Collectively Called A300–600 Series Airplanes)

AGENCY: Federal Aviation Administration (FAA), Department of Transportation (DOT).

ACTION: Supplemental notice of proposed rulemaking (NPRM); reopening of comment period.

SUMMARY: The FAA is revising an earlier NPRM for an airworthiness directive (AD) that applies to all Airbus Model A300 airplanes and Model A310 airplanes, and certain Airbus Model A300–600 series airplanes. The original NPRM would have superseded an existing AD that currently requires an inspection of the wing and center fuel tanks to determine if certain P-clips are installed and corrective action if necessary; an inspection of electrical bonding points of certain equipment in the center fuel tank for the presence of a blue coat and related investigative and corrective actions if necessary; and installation of new bonding leads and electrical bonding points on certain equipment in the wing, center, and trim fuel tanks, as necessary. The original NPRM proposed to require, for certain airplanes, installation of bonding on an additional bracket. The original NPRM resulted from fuel system reviews conducted by the manufacturer. This new action revises the original NPRM by adding a requirement, for certain airplanes, to modify the fuel/defuel valves on the left-hand wing. We are proposing this supplemental NPRM to ensure continuous electrical bonding protection of equipment in the wing, center, and trim fuel tanks and to prevent damage to wiring in the wing and center fuel tanks, due to failed P-clips used for retaining the wiring and pipes, which could result in a possible fuel ignition source in the fuel tanks.

DATES: We must receive comments on this supplemental NPRM by July 16, 2007.

ADDRESSES: Use one of the following addresses to submit comments on this proposed AD.

- *DOT Docket Web site:* Go to *http://dms.dot.gov* and follow the instructions for sending your comments electronically.
- *Government-wide rulemaking Web site:* Go to *http://www.regulations.gov* and follow the instructions for sending your comments electronically.
- *Mail:* U.S. Department of Transportation, Docket Operations, M–30, West Building Ground Floor, Room W12–140, 1200 New Jersey Avenue, SE., Washington, DC 20590.
- *Fax:* (202) 493–2251.
- *Hand Delivery:* Room W12–140 on the ground floor of the West Building, 1200 New Jersey Avenue, SE., Washington, DC, between 9 a.m. and 5 p.m., Monday through Friday, except Federal holidays.

Contact Airbus, 1 Rond Point Maurice Bellonte, 31707 Blagnac Cedex, France, for service information identified in this proposed AD.

FOR FURTHER INFORMATION CONTACT: Tom Stafford, Aerospace Engineer, International Branch, ANM–116, FAA, Transport Airplane Directorate, 1601 Lind Avenue, SW., Renton, Washington 98057–3356; telephone (425) 227–1622; fax (425) 227–1149.

SUPPLEMENTARY INFORMATION:

Comments Invited

We invite you to submit any relevant written data, views, or arguments regarding this proposal. Send your comments to an address listed in the **ADDRESSES** section. Include the docket number ''Docket No. FAA–2007–27010; Directorate Identifier 2006–NM–259–AD'' at the beginning of your comments. We specifically invite comments on the overall regulatory, economic, environmental, and energy aspects of this supplemental NPRM. We will consider all comments received by the closing date and may amend this supplemental NPRM in light of those comments.

We will post all comments submitted, without change, to *http://dms.dot.gov*, including any personal information you provide. We will also post a report summarizing each substantive verbal contact with FAA personnel concerning this proposed AD. Using the search function of that Web site, anyone can find and read the comments in any of our dockets, including the name of the individual who sent the comment (or signed the comment on behalf of an association, business, labor union, etc.). You may review the DOT's complete Privacy Act Statement in the **Federal Register** published on April 11, 2000 (65 FR 19477–78), or you may visit *http://dms.dot.gov.*

Examining the Docket

You may examine the AD docket on the Internet at *http://dms.dot.gov*, or in person at the Docket Operations office between 9 a.m. and 5 p.m., Monday through Friday, except Federal holidays. The Docket Operations office (telephone (800) 647–5527) is located on the ground floor of the West Building at the street address stated in the **ADDRESSES** section. Comments will be available in the AD docket shortly after the Docket Management System receives them.

Discussion

The FAA issued a notice of proposed rulemaking (NPRM) (the ''original NPRM'') to amend 14 CFR part 39 to include an AD that supersedes AD 2006–15–09, amendment 39–14689 (71 FR 42026, July 25, 2006). The existing AD applies to all Airbus Model A300 airplanes and Model A310 airplanes, and to certain Airbus Model A300–600 series airplanes. The original NPRM was published in the **Federal Regisgter** on January 25, 2007 (72 FR 3373). The original NPRM proposed to continue to require inspection of the wing and center fuel tanks to determine if certain P-clips are installed and corrective action if necessary; inspection of electrical bonding points of certain equipment in the center fuel tank for the presence of a blue coat and related investigative and corrective actions if necessary; and installation of new bonding leads and electrical bonding points on certain equipment in the wing, center, and trim fuel tanks, as necessary. The original NPRM also proposed to require, for certain airplanes, installation of bonding on an additional bracket.

Actions Since Original NPRM Was Issued

Since we issued the original NPRM, Airbus has issued Service Bulletin A300–28–6064, Revision 01, dated April 3, 2007. We referred to Airbus Service Bulletin A300–28–6064, dated July 28, 2005, as the appropriate source of service information for accomplishing the required actions for Airbus Model A300–600 series airplanes in the original NPRM. Revision 01 of Airbus Service Bulletin A300–28–6064 includes the additional work of modifying the fuel/defuel valves on the left-hand wing. Therefore, we have included in this supplemental NPRM a new paragraph (k) to include this new action. We have also revised Table 1 of this supplemental NPRM to specify that either the original issue or Revision 01 of the service bulletin is acceptable for compliance with the actions previously

required for these airplanes by AD 2006–15–09. We have also revised the Costs of Compliance section of this supplemental NPRM to reflect the change in costs related to Revision 01 of this service bulletin.

Comments

We have considered the following comments on the original NPRM.

Request To Use New Revision of Additional Service Bulletin

Airbus requests that we refer to Revision 01 of Airbus Service Bulletin A300–28–6077, dated October 26, 2006, rather than the original issue of that service bulletin, dated July 25, 2005. (In the original NPRM we referred to the original issue of that service bulletin as the appropriate source of service information for doing the following: Installing a new bonding lead(s) on the water drain system of the trim fuel tank, and installing electrical bonding points for certain airplanes.)

We agree with Airbus' request to refer to Revision 01 of Airbus Service Bulletin A300–28–6077. The procedures in Revision 01 of the service bulletin are essentially the same as those in the original issue. Revision 01 adds a modification classification table, makes minor changes to procedures, and changes the work hours and kit prices for certain airplanes. Therefore, we have revised Table 1 of this supplemental NPRM to specify that either the original issue or Revision 01 of the service bulletin is acceptable for compliance. We have also revised the Costs of Compliance section of this supplemental NPRM to reflect the change in costs related to this service bulletin.

Explanation of Changes to Paragraph (m) of the Supplemental NPRM

Since we issued the original NPRM we have issued alternative methods of compliance (AMOCs) for AD 2006–15–09. Therefore, we have revised the AMOCs paragraph of this supplemental NPRM (paragraph (l) of the original NPRM) to state that AMOCs approved previously in accordance with AD 2006–15–09 are approved as AMOCs for the corresponding provisions of this supplemental NPRM.

We have also revised paragraph (m) of this supplemental NPRM (paragraph (l) of the original NPRM) to clarify the appropriate procedure for notifying the principal inspector before using any approved AMOC on any airplane to which the AMOC applies.

FAA's Determination and Proposed Requirements of the Supplemental NPRM

Certain changes discussed above expand the scope of the original NPRM; therefore, we have determined that it is necessary to reopen the comment period to provide additional opportunity for public comment on this supplemental NPRM.

Costs of Compliance

There are about 29 Model A300 airplanes, 63 Model A310 airplanes, and 102 Model A300–600 series airplanes of the affected design in the U.S. fleet. The following table provides the estimated costs, at an average labor rate of $80 per hour, for U.S. operators to comply with this proposed AD. For some actions, the estimated work hours and cost of parts in the following table depend on the airplane configuration.

ESTIMATED COSTS

Model	Action	Work hours	Parts	Cost per airplane	Number of U.S.-registered airplanes	Fleet cost
A300 airplanes	Inspect wing and center fuel tanks for P-clips (required by AD 2006–15–09).	40	None	$3,200	29	$92,800.
	Install bonding leads/points in wing and center fuel tank (required by AD 2006–15–09).	Between 136 and 155.	Between $3,800 and $5,200.	Between $14,680 and $17,600.	29	Between $425,720 and $510,400.
A310 airplanes	Inspect wing and center fuel tanks for P-clips (required by AD 2006–15–09).	40	None	$3,200	63	$201,600.
	Install bonding leads/points in wing and center fuel tank (required by AD 2006–15–09).	Between 248 and 285.	Between $8,840 and $9,190.	Between $28,680 and $31,990.	63	Between $1,806,840 and $2,015,370.
	Inspect and install bonding leads/points in the trim fuel tank (required by AD 2006–15–09).	Between 53 and 61.	Between $50 and $70.	Between $4,290 and $4,950.	63	Between $270,270 and $311,850.
	Install bonding for slat track 11 canister bracket (new proposed action).	2	$30	$190	63	$11,970.
A300–600 series airplanes.	Inspect wing and center fuel tanks for P-clips (required by AD 2006–15–09).	40	None	$3,200	102	$326,400.
	Install bonding leads/points in wing and center fuel tanks (required by AD 2006–15–09).	Between 157 and 185.	Between $8,840 and $9,190.	Between $21,400 and $23,990.	102	Between $2,182,800 and $2,446,980.
	Inspect and install bonding leads/points in the trim fuel tank (required by AD 2006–15–09).	Between 2 and 62.	Between $60 and $520.	Between $220 and $5,480.	102	Between $22,440 and $558,960.
	Modify the fuel/defuel valves on the left-hand wing (new proposed action).	1	$20	$100	102	$10,200.

Authority for This Rulemaking

Title 49 of the United States Code specifies the FAA's authority to issue rules on aviation safety. Subtitle I, Section 106, describes the authority of the FAA Administrator. Subtitle VII, Aviation Programs, describes in more detail the scope of the Agency's authority.

We are issuing this rulemaking under the authority described in Subtitle VII, Part A, Subpart III, Section 44701, ''General requirements.'' Under that section, Congress charges the FAA with promoting safe flight of civil aircraft in air commerce by prescribing regulations for practices, methods, and procedures the Administrator finds necessary for safety in air commerce. This regulation is within the scope of that authority because it addresses an unsafe condition that is likely to exist or develop on products identified in this rulemaking action.

Regulatory Findings

We have determined that this proposed AD would not have federalism implications under Executive Order 13132. This proposed AD would not have a substantial direct effect on the States, on the relationship between the national Government and the States, or on the distribution of power and responsibilities among the various levels of government.

For the reasons discussed above, I certify that the proposed regulation:

1. Is not a ''significant regulatory action'' under Executive Order 12866;

2. Is not a ''significant rule'' under the DOT Regulatory Policies and Procedures (44 FR 11034, February 26, 1979); and

3. Will not have a significant economic impact, positive or negative, on a substantial number of small entities under the criteria of the Regulatory Flexibility Act.

We prepared a regulatory evaluation of the estimated costs to comply with this supplemental NPRM and placed it in the AD docket. See the **ADDRESSES** section for a location to examine the regulatory evaluation.

List of Subjects in 14 CFR Part 39

Air transportation, Aircraft, Aviation safety, Safety.

The Proposed Amendment

Accordingly, under the authority delegated to me by the Administrator, the FAA proposes to amend 14 CFR part 39 as follows:

PART 39—AIRWORTHINESS DIRECTIVES

1. The authority citation for part 39 continues to read as follows:

Authority: 49 U.S.C. 106(g), 40113, 44701.

§ 39.13 [Amended]

2. The Federal Aviation Administration (FAA) amends § 39.13 by removing amendment 39–14689 (71 FR 42026, July 25, 2006) and by adding the following new airworthiness directive (AD):

Airbus: Docket No. FAA–2007–27010; Directorate Identifier 2006–NM–259–AD.

Comments Due Date

(a) The FAA must receive comments on this AD action by July 16, 2007.

Affected ADs

(b) This AD supersedes AD 2006–15–09.

Applicability

(c) This AD applies to the Airbus airplanes identified in paragraphs (c)(1) and (c)(2) of this AD, certificated in any category.

(1) All Model A300 airplanes and Model A310 airplanes.

(2) Model A300 B4–601, B4–603, B4–620, and B4–622 airplanes; Model A300 B4–605R and B4–622R airplanes; Model A300 F4–605R and F4–622R airplanes; and Model A300 C4–605R Variant F airplanes; except those airplanes identified in paragraphs (c)(2)(i) and (c)(2)(ii) of this AD.

(i) Airplanes not equipped with trim fuel tanks on which Airbus Modifications 12226, 12365, and 12308 have been incorporated in production.

(ii) Airplanes equipped with trim fuel tanks on which Airbus Modifications 12226, 12365, 12308, 12294, and 12476 have been incorporated in production.

Unsafe Condition

(d) This AD results from fuel system reviews conducted by the manufacturer. We are issuing this AD to ensure continuous electrical bonding protection of equipment in the wing, center, and trim fuel tanks and to prevent damage to wiring in the wing and center fuel tanks, due to failed P-clips used for retaining the wiring and pipes, which could result in a possible fuel ignition source in the fuel tanks.

Compliance

(e) You are responsible for having the actions required by this AD performed within the compliance times specified, unless the actions have already been done.

Restatement of the Requirements of AD 2006–15–09

Service Bulletin References

(f) The term ''service bulletin,'' as used in this AD, means the Accomplishment Instructions of the service bulletins identified in Table 1 of this AD, as applicable.

TABLE 1.—SERVICE BULLETIN REFERENCES

For Airbus—	And the actions specified in—	Use Airbus Service Bulletin—	Dated—
Model A300 airplanes	Paragraph (g) of this AD	A300–28–0081	July 20, 2005.
	Paragraph (h) of this AD	A300–28–0079	September 29, 2005; or Revision 01, dated June 6, 2006. After the effective date of this AD, only Revision 01 may be used.
Model A310 airplanes	Paragraph (g) of this AD	A310–28–2143	July 20, 2005.
	Paragraph (h) of this AD	A310–28–2142	August 26, 2005; or Revision 01, dated July 17, 2006. After the effective date of this AD, only Revision 01 may be used.
	Paragraph (i) of this AD	A310–28–2153	July 20, 2005.
Model A300 B4–601, B4–603, B4–620, and B4–622 airplanes; Model A300 B4–605R and B4–622R airplanes; Model A300 F4–605R and F4–622R airplanes; and Model A300 C4–605R Variant F airplanes.	Paragraph (g) of this AD	A300–28–6068	July 20, 2005.
	Paragraph (h) of this AD	A300–28–6064	July 28, 2005; or Revision 01, dated April 3, 2007.

TABLE 1.—SERVICE BULLETIN REFERENCES—Continued

For Airbus—	And the actions specified in—	Use Airbus Service Bulletin—	Dated—
	Paragraph (i) of this AD	A300–28–6077	July 25, 2005; or Revision 01, dated October 26, 2006.

Inspection and Corrective Actions

(g) Within 59 months after August 29, 2006 (the effective date of AD 2006–15–09): Do a general visual inspection of the right and left wing fuel tanks and center fuel tank, if applicable, to determine if any NSA5516–XXND– and NSA5516–XXNJ–type P-clips are installed for retaining wiring and pipes in any tank, and do all applicable corrective actions before further flight after the inspection, by accomplishing all the actions specified in the Service Bulletin.

Note 1: For the purposes of this AD, a general visual inspection is: ''A visual examination of an interior or exterior area, installation, or assembly to detect obvious damage, failure, or irregularity. This level of inspection is made from within touching distance unless otherwise specified. A mirror may be necessary to ensure visual access to all surfaces in the inspection area. This level of inspection is made under normally available lighting conditions such as daylight, hangar lighting, flashlight, or droplight and may require removal or opening of access panels or doors. Stands, ladders, or platforms may be required to gain proximity to the area being checked.''

Installation of Bonding Leads and Points for Wing and Center Fuel Tanks

(h) Within 59 months after August 29, 2006: Do the actions specified in paragraphs (h)(1) and (h)(2) of this AD, by accomplishing all the actions specified in the Service Bulletin.

(1) In the center fuel tank, if applicable, do a general visual inspection of the electrical bonding points of the equipment identified in the service bulletin for the presence of a blue coat, and do all related investigative and corrective actions before further flight after the inspection.

(2) In the left and right wing fuel tanks and center fuel tank, if applicable, install bonding leads and electrical bonding points on the equipment identified in the service bulletin.

Installation of Bonding Leads and Points for the Trim Fuel Tank

(i) For Model A310 airplanes; Model A300 B4–601, B4–603, B4–620, and B4–622 airplanes; Model A300 B4–605R and B4–622R airplanes; Model A300 F4–605R and F4–622R airplanes; and Model A300 C4–605R Variant F airplanes; equipped with a trim fuel tank: Within 59 months after August 29, 2006, install a new bonding lead(s) on the water drain system of the trim fuel tank and install electrical bonding points on the equipment identified in the service bulletin in the trim fuel tank, by accomplishing all the actions specified in the service bulletin, as applicable.

New Requirements of This AD

Installation of Bonding for Slat Track 11 Canister Bracket

(j) For all Model A310 airplanes on which the actions specified in Airbus Service Bulletin A310–28–2142, dated August 26, 2005, have been done before the effective date of this AD: Within 50 months after the effective date of this AD, install bonding for the slat track 11 canister bracket, in accordance with the Accomplishment Instructions of Airbus Service Bulletin A310–28–2142, Revision 01, dated July 17, 2006.

Modification of the Fuel/Defuel Valves

(k) For all Model A300 B4–601, B4–603, B4–620, and B4–622 airplanes; Model A300 B4–605R and B4–622R airplanes; Model A300 F4–605R and F4–622R airplanes; and Model A300 C4–605R Variant F airplanes: Within 44 months after the effective date of this AD, modify the fuel/defuel valves on the left-hand wing in accordance with the Accomplishment Instructions of Airbus Service Bulletin A300–28–6064, Revision 01, dated April 3, 2007.

Parts Installation

(l) As of August 29, 2006, no person may install any NSA5516–XXND- or NSA5516–XXNJ-type P-clip for retaining wiring and pipes in any wing, center, or trim fuel tank, on any airplane.

Alternative Methods of Compliance (AMOCs)

(m)(1) The Manager, International Branch, ANM–116, Transport Airplane Directorate, FAA, has the authority to approve AMOCs for this AD, if requested in accordance with the procedures found in 14 CFR 39.19.

(2) To request a different method of compliance or a different compliance time for this AD, follow the procedures in 14 CFR 39.19. Before using any approved AMOC on any airplane to which the AMOC applies, notify your appropriate principal inspector (PI) in the FAA Flight Standards District Office (FSDO), or lacking a PI, your local FSDO.

(3) AMOCs approved previously in accordance with AD 2006–15–09 are approved as AMOCs for the corresponding provisions of this AD.

Related Information

(n) European Aviation Safety Agency airworthiness directive 2006–0325, dated October 23, 2006, also addresses the subject of this AD.

Issued in Renton, Washington, on June 13, 2007.

Ali Bahrami,

Manager, Transport Airplane Directorate, Aircraft Certification Service.

[FR Doc. E7–11931 Filed 6–19–07; 8:45 am]

BILLING CODE 4910–13–P

DEPARTMENT OF STATE

22 CFR Part 171

[Public Notice 5835]

RIN 1400–AC25

Search Fees in Freedom of Information Act Cases

AGENCY: Department of State.

ACTION: Proposed rule.

SUMMARY: The Department of State proposes to revise its regulations on fees to be charged for searching for information responsive to requests made under the Freedom of Information Act. The existing regulations have proved to be unworkable, particularly in terms of ascertaining the costs of electronic searches.

DATES: The Department will consider any comments from the public that are received by September 18, 2007.

ADDRESSES: You may submit comments to Margaret P. Grafeld, Director, Office of Information Programs and Services, (202) 261–8300, U.S. Department of State, SA–2, 515 22nd St., NW., Washington, DC 20522–6001; Fax: 202–261–8590. E-mail: *GrafeldMP@state.gov*. If submitting comments by e-mail, you must include the RIN in the subject line of your message. You may view this rule online at *http://www.regulations.gov/index.cfm*.

FOR FURTHER INFORMATION, CONTACT: Margaret P. Grafeld, Director, Office of Information Programs and Services, (202) 261–8300, U.S. Department of State, SA–2, 515 22nd St., NW., Washington, DC 20522–6001; Fax: 202–261–8590.

SUPPLEMENTARY INFORMATION: Although the current version of the search fee provision was promulgated in 2004, based largely on previous long-standing

regulations, experience has shown that the previous, as well as the current, regulation could not, in fact, be given full effect because the cost of computer searches could not be fully ascertained and because of the difficulties in determining the salary costs attributable to individuals doing manual searches, particularly at overseas posts where Foreign Service Nationals have a different and more frequently changing pay scale. By using average salary costs of the categories of individuals involved in a search (i.e., clerical, professional, executive) instead of the actual salary of each such individual, the proposed revision will permit computer calculation of the fees that should be as accurate as the current method and should not result in any substantial increase or diminution of search fees charged or collected.

Regulatory Findings

Administrative Procedure Act. The Department is publishing this rule as a proposed rule. Public comments are invited for a period of 90 days following this document's publication in the **Federal Register**.

Regulatory Flexibility Act. The Department, in accordance with the Regulatory Flexibility Act (5 U.S.C. 605(b)), has reviewed this proposed rule and, by approving it, certifies that this rule will not have significant economic impact on a substantial number of small entities.

Unfunded Mandates Act of 1995. This proposed rule will not result in the expenditure by State, local, and tribal governments, in the aggregate, or by the private sector, of $100 million or more in any year, and it will not significantly or uniquely affect small governments. Therefore, no actions are deemed necessary under the provisions of the Unfunded Mandates Reform Act of 1995.

Small Business Regulatory Enforcement Fairness Act of 1996. This rule is not a major rule as defined by section 804 of the Small Business Regulatory Enforcement Act of 1996. This rule will not result in an annual effect on the economy of $100 million or more; a major increase in costs or prices; or significant adverse effects on competition, employment, investment, productivity, innovation, or on the ability of United States-based companies to compete with foreign based companies in domestic and import markets.

Executive Order 12866. The Department does not consider this rule to be a ''significant regulatory action'' under Executive Order (E.O.) 12866, section 3(f), Regulatory Planning and Review. In addition, the Department is exempt from Executive Order 12866 except to the extent that it is promulgating regulations in conjunction with a domestic agency that are significant regulatory actions. The Department has nevertheless reviewed the regulation to ensure its consistency with the regulatory philosophy and principles set forth in that Executive Order.

Executive Order 13132. This regulation will not have substantial direct effects on the states, on the relationship between the national government and the states, or on the distribution of power and responsibilities among the various levels of government. Therefore, in accordance with section 6 of Executive Order 13132, it is determined that this rule does not have sufficient federalism implications to require consultations or warrant the preparation of a federalism summary impact statement.

Paperwork Reduction Act. This rule does not impose any new reporting or recordkeeping requirements subject to the Paperwork Reduction Act, 44 U.S.C. Chapter 35.

List Subjects in 22 CFR Part 171

Administrative practice and procedure, fees for searches in Freedom of Information Act cases.

For the reasons set forth in the preamble, 22 CFR part 171 of the Code of Federal Regulations is proposed to be amended as follows:

PART 171—AVAILABILITY OF INFORMATION AND RECORDS TO THE PUBLIC

1. The authority citation for part 171 continues to read as follows:

Authority: 22 U.S.C. 552, 552a; Ethics in Government Act of 1978, Pub. L. 95–521, 92 Stat. 1824, as amended; E.O. 12958, as amended, 60 FR 19825, 3 CFR, 1995 Comp., p. 333; E.O. 12600, 52 FR 23781, 3 CFR, 1987 Comp., p. 235.

2. Section 171.14 is amended by adding a new paragraph (a)(3) to read as follows:

§ 171.14 Fees to be charged—general.

* * * * *

(a) * * *

(3) For both manual and computer searches, the Department shall charge the estimated direct cost of each search based on the average current salary rates of the categories of personnel doing the searches. Further information on search fees is available by clicking on ''FOIA'' at the Department's Web site at *http://www.state.gov* or directly at the FOIA home page at *http://foia.state.gov*.

* * * * *

Dated: June 15, 2007.

Lee Lohman,

Deputy Assistant Secretary, Department of State.

[FR Doc. E7–11944 Filed 6–19–07; 8:45 am]

BILLING CODE 4710–24–P

ENVIRONMENTAL PROTECTION AGENCY

40 CFR Part 52

[EPA–R06–OAR–2005–NM–0006; FRL–8328–8]

Approval and Promulgation of Air Quality Implementation Plans; New Mexico; Prevention of Significant Deterioration and New Source Review

AGENCY: Environmental Protection Agency (EPA).

ACTION: Proposed rule.

SUMMARY: The EPA is proposing to approve revisions to the New Mexico State Implementation Plan (SIP) that were submitted to EPA on April 11, 2002, and December 29, 2005. The proposed revisions modify New Mexico's Prevention of Significant Deterioration (PSD) and Nonattainment New Source Review (NNSR) regulations in the SIP to address changes to the Federal PSD and NNSR regulations, which were promulgated by EPA on December 31, 2002 and reconsidered with minor changes on November 7, 2003 (collectively, these two Federal actions are called the ''2002 New Source Review (NSR) Reform Rules''). The proposed revisions include provisions for baseline emissions calculations, an actual-to-projected-actual methodology for calculating emissions changes, options for plantwide applicability limits (PALs), and recordkeeping and reporting requirements. EPA is proposing to approve these revisions pursuant to section 110, parts C and D of the Federal Clean Air Act (Act).

DATES: Comments must be received on or before July 20, 2007.

ADDRESSES: Submit your comments, identified by Docket ID Number EPA–R06–OAR–2005–NM–0006 by one of the following methods:

- *Federal eRulemaking Portal: http://www.regulations.gov.* Follow the online instructions for submitting comments.
- *U.S. EPA Region 6 ''Contact Us'' Web site: http://epa.gov/region6/r6coment.htm.* Please click on ''6PD'' (Multimedia) and select ''Air'' before submitting comments.

• *E-mail:* Mr. Stanley M. Spruiell at *spruiell.stanley@epa.gov.*

• *Fax:* Mr. Stanley M. Spruiell, Air Permits Section (6PD–R), at fax number (214) 665–7263.

• *Mail:* Mr. Stanley M. Spruiell, Air Permits Section (6PD–), Environmental Protection Agency, 1445 Ross Avenue, Suite 1200, Dallas, Texas 75202–2733.

• *Hand or Courier Delivery:* Mr. Stanley M. Spruiell, Air Permits Section (6PD–R), Environmental Protection Agency, 1445 Ross Avenue, Suite 1200, Dallas, Texas 75202–2733. Such deliveries are accepted only between the hours of 8 a.m. and 4 p.m. weekdays except for legal holidays. Special arrangements should be made for deliveries of boxed information.

Instructions: Direct your comments to Docket ID Number EPA–R06–OAR–2005–NM–0006. The EPA's policy is that all comments received will be included in the public docket without change and may be made available online at *http://www.regulations.gov,* including any personal information provided, unless the comment includes information claimed to be Confidential Business Information (CBI) or other information the disclosure of which is restricted by statute. Do not submit information through *http://www.regulations.gov* or e-mail if you believe that it is CBI or otherwise protected from disclosure. The *http://www.regulations.gov* Web site is an ''anonymous access'' system, which means that EPA will not know your identity or contact information unless you provide it in the body of your comment. If you send an e-mail comment directly to EPA without going through *http://www.regulations.gov,* your e-mail address will be automatically captured and included as part of the comment that is placed in the public docket and made available on the Internet. If you submit an electronic comment, EPA recommends that you include your name and other contact information in the body of your comment along with any disk or CD–ROM submitted. If EPA cannot read your comment due to technical difficulties and cannot contact you for clarification, EPA may not be able to consider your comment. Electronic files should avoid the use of special characters and any form of encryption and should be free of any defects or viruses.

Docket: All documents in the docket are listed in the *http://www.regulations.gov* index. Although listed in the index, some information is not publicly available, *e.g.*, CBI or other information the disclosure of which is restricted by statute. Certain other material, such as copyrighted material, will be publicly available only in hard copy. Publicly available docket materials are available either electronically at *http://www.regulations.gov* or in hard copy at the Air Permits Section (6PD–R), Environmental Protection Agency, 1445 Ross Avenue, Suite 700, Dallas, Texas 75202–2733. The file will be made available by appointment for public inspection in the Region 6 Freedom of Information Act (FOIA) Review Room between the hours of 8:30 a.m. and 4:30 p.m. weekdays except for legal holidays. Contact the person listed in the **FOR FURTHER INFORMATION CONTACT** paragraph below to make an appointment. If possible, please make the appointment at least two working days in advance of your visit. A 15 cent per page fee will be charged for making photocopies of documents. On the day of the visit, please check in at the EPA Region 6 reception area on the seventh floor at 1445 Ross Avenue, Suite 700, Dallas, Texas.

The State submittal is also available for public inspection during official business hours by appointment at the New Mexico Environment Department, Air Quality Bureau, 1190 St. Francis Drive, Santa Fe, New Mexico 87502.

FOR FURTHER INFORMATION CONTACT: Mr. Stanley M. Spruiell, Air Permits Section (6PD–R), Environmental Protection Agency, Region 6, 1445 Ross Avenue, Suite 700, Dallas, Texas 75202–2733, telephone (214) 665–7212; fax number (214) 665–7263; e-mail address *spruiell.stanley@epa.gov.*

SUPPLEMENTARY INFORMATION: Throughout this document, any reference to ''we,'' ''us,'' or ''our'' shall mean EPA.

Outline

I. What Action Is EPA Proposing?
II. What Is the Background for This Action?
III. What Is EPA's Analysis of New Mexico's NSR Rule Revisions?
IV. Does Approval of New Mexico NSR Rule Revisions Interfere With Attainment, Reasonable Further Progress, or Any Other Applicable Requirement of the Act?
V. What Action Is EPA Taking Today?
VI. Statutory and Executive Order Reviews

I. What Action Is EPA Proposing?

On April 11, 2002, and December 29, 2005, New Mexico submitted revisions to the New Mexico SIP. The submittal consists of revisions to two regulations that are already part of the New Mexico SIP. The affected regulations are 20.2.74 New Mexico Administrative Code (NMAC) (Permits—Prevention of Significant Deterioration) and 20.2.79 NMAC (Permits—Nonattainment Areas). The revisions will update New Mexico's PSD and NNSR regulations to make them consistent with changes to the Federal NSR regulations published on December 31, 2002 (67 FR 80186) and November 7, 2003 (68 FR 63021). These EPA rulemakings are collectively referred to as the ''2002 NSR Reform Rules.''

This SIP revision also includes other non-substantive changes to New Mexico's PSD and NNSR rules needed to update the regulatory citations, make clarifying revisions to the regulatory text, and correct typographical errors. These non-substantive changes do not change the regulatory requirements. Please see the Technical Support Document (TSD) for further information.

The EPA is also proposing to approve portions of the SIP submittal dated April 11, 2002. This action only approves the following provisions of the April 11, 2002, SIP submittal:

• The removal of the definition of ''complete'' currently in Paragraph O of 20.2.74.7 NMAC; and

• Revisions to 20.2.74.400 NMAC and 20.2.79 NMAC which relate to the requirements for public notice and public participation for PSD and NNSR permits.

The EPA is only addressing two provisions of the April 11, 2002, SIP submittal in this action because these provisions are the only provisions in the submittal that address PSD and NNSR. The EPA will take appropriate action on the remaining provisions of the April 11, 2002, submittal in a separate action.

II. What Is the Background for This Action?

On December 31, 2002, EPA published final rule changes to 40 Code of Federal Regulations (CFR) parts 51 and 52, regarding the Clean Air Act's PSD and NNSR programs. See 67 FR 80186. On November 7, 2003, EPA published a notice of final action on the reconsideration of the December 31, 2002, final rule changes. See 68 FR 63021. In the November 7th final action, EPA added the definition of ''replacement unit,'' and clarified issues regarding PALs. The purpose of today's action is to propose approval of New Mexico's SIP submittal, which includes revisions to the NNSR and PSD SIP rules.

The 2002 NSR Reform Rules are part of EPA's implementation of parts C and D of Title I of the Act, 42 U.S.C. 7470–7515, addressing major sources and major modifications. Part C of Title I of the Act, 42 U.S.C. 7470–7492, is the PSD program, which applies in areas that meet the National Ambient Air

Quality Standards (NAAQS)—''attainment areas''—as well as in areas for which there is insufficient information to determine whether the area meets the NAAQS—''unclassifiable areas.'' Part D of Title I of the Act, 42 U.S.C. 7501–7515, is the NNSR program, which applies in areas that are not in attainment of one or more of the NAAQS—''nonattainment areas.'' EPA regulations implementing the NNSR and PSD programs are contained in 40 CFR 51.165, 51.166, 52.21, 52.24, and appendix S of part 51.

The Act's NSR programs are preconstruction review and permitting programs that apply to new and modified stationary sources of air pollutants regulated under the Act. These programs include a combination of air quality planning and air pollution control technology program requirements. Briefly, section 109 of the Act, 42 U.S.C. 7409, requires EPA to promulgate primary NAAQS to protect public health and secondary NAAQS to protect public welfare. Once EPA sets those standards, each State must develop, adopt, and submit to EPA for approval, a SIP that contains emissions limitations and other control measures to attain and maintain the NAAQS. Each SIP is required to contain a preconstruction review program for the construction and modification of stationary sources of air pollution to assure that the NAAQS are achieved and maintained; to protect areas of clean air; to protect air quality related values (such as visibility) in national parks and other areas; to assure that appropriate emissions controls are applied; to maximize opportunities for economic development consistent with the preservation of clean air resources; and to ensure that any decision to increase air pollution is made only after full public consideration of the consequences of the decision.

The 2002 NSR Reform Rules made changes to five areas of the NSR programs. The rules: (1) Provide a new method for determining baseline actual emissions in the NNSR and PSD programs; (2) adopt for the NNSR and PSD programs an actual-to-projected-actual methodology for determining whether a major modification has occurred; (3) allow major stationary sources to comply with PALs to avoid having a significant emissions increase that triggers the requirements of the NNSR and PSD programs; (4) provide a new applicability provision in the NNSR and PSD programs for emissions units that are designated clean units; and (5) exclude pollution control projects from the NNSR and PSD program definitions of ''physical change or change in the method of operation.'' For additional information on the 2002 NSR Reform Rules, see 67 FR 80186 (December 31, 2002) and *http://www.epa.gov/nsr.*

After the 2002 NSR Reform Rules were finalized and became effective (March 3, 2003), various petitioners challenged numerous aspects of the 2002 NSR Reform Rules, along with portions of EPA's 1980 NSR Rules (45 FR 5276, August 7, 1980). On June 24, 2005, the D.C. Circuit Court of Appeals issued a decision on the challenges to the 2002 NSR Reform Rules. See *New York* v. *United States,* 413 F.3d 3 (D.C. Cir. 2005) *rehearing en banc denied* (December 9, 2005). The Court vacated portions of the Rules pertaining to clean units and pollution control projects; remanded a portion of the Rules regarding recordkeeping, e.g., 40 CFR 51.165(a)(6) and 40 CFR 51.166(r)(6); and either upheld or did not comment on the other provisions included as part of the 2002 NSR Reform Rules. The EPA has not yet responded to the Court's remand regarding the recordkeeping provisions. Today's action is consistent with the decision of the D.C. Circuit Court of Appeals because New Mexico's submittal does not include any portions of the 2002 NSR Reform Rules that were vacated.

The 2002 NSR Reform Rules require that no later than January 2, 2006, State agencies adopt and submit revisions to their SIP permitting programs to implement the minimum program elements of the 2002 NSR Reform Rules. See 40 CFR 51.166(a)(6)(i) (requiring State agencies to adopt and submit PSD SIP revisions within three years after new amendments are published in the **Federal Register**). State agencies may meet the requirements of 40 CFR part 51 and the 2002 NSR Reform Rules with different but equivalent regulations. If, however, a State decides not to implement any of the new applicability provisions, that State must demonstrate that its existing program is at least as stringent as the Federal program. As discussed in further detail below, EPA believes the revisions contained in this submittal are approvable for inclusion into the New Mexico SIP.

III. What Is EPA's Analysis of New Mexico's NSR Rule Revisions?

New Mexico currently has an EPA-approved NSR program for new and modified sources, including a minor NSR preconstruction permit program, an NNSR preconstruction permit program, and a PSD preconstruction permit program. Today, EPA is proposing to approve revisions to New Mexico's existing NNSR and PSD regulations in the SIP. These proposed revisions were submitted to EPA on December 29, 2005. Copies of the revised rules, as well as the TSD, can be obtained from the Docket, as discussed in the ''Docket''' section above. A discussion of the specific New Mexico rule changes that are proposed for inclusion in the SIP is included in the TSD and summarized below.

New Mexico's regulation 20.2.74 NMAC (Permits—Prevention of Significant Deterioration) contains the preconstruction review program that provides for the prevention of significant deterioration of ambient air quality as required under part C of Title I of the Act. The program applies to major stationary sources or modifications constructed or installed in areas designated as attainment or unclassifiable with respect to the NAAQS.

New Mexico's permitting requirements for major sources in or impacting upon non-attainment areas are set forth at 20.2.79 NMAC (Permitting—Nonattainment Areas). The current New Mexico NNSR program applies to the construction of any new major stationary source or major modification of air pollution in a nonattainment area, as required by part D of Title I of the Act. To receive approval to construct, a source that is subject to this regulation must show that it will not cause a net increase in pollution or create a delay in meeting the NAAQS and that it will install and use control technology that achieves the lowest achievable emission rate.

These revisions to 20.2.74 NMAC and 20.2.79 NMAC update the existing provisions to be consistent with the Federal 2002 NSR Reform Rules. These revisions address baseline actual emissions, actual-to-projected-actual applicability tests, and PALs. The revisions included in New Mexico's NNSR and PSD programs are substantively the same as the 2002 NSR Reform Rules. As part of EPA's review of New Mexico's regulations, EPA performed a line-by-line review of the proposed revisions and determined that the proposed revisions are consistent with the program requirements for the preparation, adoption and submittal of implementation plans for NSR set forth at 40 CFR 51.165 and 51.166. This review is contained in the TSD for this action. The New Mexico rules that EPA reviewed do not incorporate the portions of the Federal rules that were vacated by the D.C. Circuit Court of Appeals, such as the clean unit provisions and the pollution control projects exclusion.

The revised New Mexico rules include the recordkeeping provisions set forth in the Federal rules at 40 CFR 51.165(a)(6) and 51.166(r)(6). However, New Mexico chose to exclude the phrase ''reasonable possibility.'' In the Federal rule, this phrase limits the recordkeeping provisions to modifications at facilities that use the actual-to-future-actual methodology to calculate emissions changes, where there is a ''reasonable possibility'' that the modifications will result in a significant emissions increase. Therefore, by leaving out the phrase ''reasonable possibility'' from Subsection E of 20.2.74.300 NMAC and Subsection E of 20.2.79.199 NMAC, the NMED rules require all modifications that use the actual-to-future-actual methodology to meet the recordkeeping requirements. As noted earlier, EPA has not yet responded to the D.C. Circuit Court of Appeals remand of the recordkeeping provisions of EPA's 2002 NSR Reform Rules. As a result, EPA's final decision with regard to the remand may require EPA to take further action on this portion of NMED's rules. At present, however, NMED's recordkeeping provisions are at least as stringent as the Federal requirements, and are therefore approvable.

In the April 11, 2002, submittal, New Mexico revised the definitions by removing the definition of ''complete'' from Paragraph O of 20.2.74.7 NMAC. The current SIP contained this definition of ''complete'' to meet the requirements of 40 CFR 51.166(b)(22). Although the definition of ''complete'' is removed from 20.2.74.7 NMAC, other provisions in 20.2.74 NMAC address the criteria that a permit application must address in order to be administratively complete. Specifically, 20.2.74.301 NMAC and 20.2.74.400 NMAC include each of the elements that an application for a PSD permit must contain in order to be administratively complete. These provisions include and meet the requirements of 40 CFR 51.166(n). Thus the New Mexico rules contain provisions that ensure that PSD permit applications are administratively complete as required by the Federal rules.

The April 11, 2002, submittal also includes revisions to 20.2.74.400 NMAC and 20.2.79.118 NMAC, which include the schedules and procedures to determine completeness of PSD and NNSR permit applications and the requirements for public participation and notice. The provisions were revised to provide that the New Mexico Environment Department (NMED) will review a permit application and determine whether it is administratively complete within 30 days after receipt of the application. If the application is administratively complete, the NMED will notify the applicant of this finding by certified mail. If the application is administratively incomplete, the NMED will inform the applicant of such finding by certified mail and state the additional information or points of clarifications that are necessary to deem the application administratively complete. When the NMED receives additional information or clarification, it will promptly review such information and determine whether the application is administratively complete. The procedures for determining administrative completeness and for public participation meet the requirements of 40 CFR 51.161 and 40 CFR 51.166(q) which specifies the public participation requirements for PSD permits.

The April 11, 2002, submittal also revised 20.2.74.400 NMAC to include a cross-reference to 20.2.72 NMAC. Specifically, 20.2.74.400 NMAC provides that in order for a PSD permit application to be administratively complete, it must meet 20.2.74.301 NMAC and 20.2.72 NMAC. 20.2.74.301 NMAC includes the source information specified in 40 CFR 51.166(n) and is not substantively changed in this action. Under 20.2.72 NMAC, requirements of a complete application are identified in Paragraph A of 20.2.72.203 NMAC. The cross-reference to Paragraph A of 20.2.72.203 NMAC contains the elements for a complete application which has non-substantive changes to the current SIP. It also contains additional criteria that are in addition to the completeness elements that a permit application must contain in order to be administratively complete. Accordingly, New Mexico retains the minimum requirements for determining whether an application is complete that meets the Federal requirements. The TSD contains a detailed discussion of these completeness provisions.

IV. Does Approval of New Mexico's Rule Revisions Interfere With Attainment, Reasonable Further Progress, or Any Other Applicable Requirement of the Act?

The Act provides in Section 110(l) that:

> Each revision to an implementation plan submitted by a State under this Act shall be adopted by such State after reasonable notice and public hearing. The Administrator shall not approve a revision of a plan if the revisions would interfere with any applicable requirement concerning attainment and reasonable further progress (as defined in section 171), or any other applicable requirement of the Act.

Because, as discussed above and in the TSD, the revisions to the New Mexico NNSR and PSD programs are substantively the same as the 2002 NSR Reform Rules, without including any vacated provisions, we conclude that these rules do not interfere with attainment, reasonable further progress, or any other applicable requirement of the Act. See 67 FR 80186 and 68 FR 63021 for EPA's detailed explanation of the legal basis for the 2002 NSR Reform Rules.

V. What Action Is EPA Taking Today?

For the reasons discussed above, EPA is proposing to approve the changes made in the two rules, 20.2.74 NMAC (Permits—Prevention of Significant Deterioration) and 20.2.79 NMAC (Permits—Nonattainment Areas) as revised in the following SIP submittals:

- The portion of the SIP revisions submitted April 11, 2002, which revise 20.2.74 NMAC and 20.2.79 NMAC; and
- The NSR Reform provisions submitted December 29, 2005.

VI. Statutory and Executive Order Reviews

Under Executive Order 12866 (58 FR 51735, October 4, 1993), this proposed action is not a ''significant regulatory action'' and therefore is not subject to review by the Office of Management and Budget. For this reason, this action is also not subject to Executive Order 13211, ''Actions Concerning Regulations That Significantly Affect Energy Supply, Distribution, or Use'' (66 FR 28355, May 22, 2001). This proposed action merely proposes to approve State law as meeting Federal requirements and imposes no additional requirements beyond those imposed by State law. Accordingly, the Administrator certifies that this proposed rule will not have a significant economic impact on a substantial number of small entities under the Regulatory Flexibility Act (5 U.S.C. 601 *et seq.*). Because this rule proposes to approve pre-existing requirements under State law and does not impose any additional enforceable duty beyond that required by State law, it does not contain any unfunded mandate or significantly or uniquely affect small governments, as described in the Unfunded Mandates Reform Act of 1995 (Pub. L. 104–4).

This proposed rule also does not have tribal implications because it will not have a substantial direct effect on one or more Indian tribes, the relationship between the Federal Government and Indian tribes, or the distribution of power and responsibilities between the

Federal Government and Indian tribes, as specified by Executive Order 13175 (65 FR 67249, November 9, 2000). This action also does not have Federalism implications because it does not have substantial direct effects on the States, the relationship between the national government and the States, or the distribution of power and responsibilities among the various levels of government, as specified in Executive Order 13132 (64 FR 43255, August 10, 1999). This action merely proposes to approve a State rule implementing a Federal standard, and does not alter the relationship or the distribution of power and responsibilities established in the Clean Air Act. The EPA interprets Executive Order 13045, ''Protection of Children from Environmental Health Risks and Safety Risks'' (62 FR 19885, April 23, 1997), as applying only to those regulatory actions that concern health or safety risks such that the analysis required under section 5–501 of the Executive Order has the potential to influence the regulation. This proposed rule is not subject to Executive Order 13045 because it would approve a State program. Executive Order 12898 (59 FR 7629 (February 16, 1994)) establishes Federal executive policy on environmental justice. Because this rule merely proposes to approve a State rule implementing a Federal standard, EPA lacks the discretionary authority to modify today's regulatory decision on the basis of environmental justice considerations. In reviewing SIP submissions, EPA's role is to approve State choices, provided that they meet the criteria of the Act. In this context, in the absence of a prior existing requirement for the State to use voluntary consensus standards (VCS), EPA has no authority to disapprove a SIP submission for failure to use VCS. It would thus be inconsistent with applicable law for EPA, when it reviews a SIP submission, to use VCS in place of a SIP submission that otherwise satisfies the provisions of the Act. Thus, the requirements of section 12(d) of the National Technology Transfer and Advancement Act of 1995 (15 U.S.C. 272 note) do not apply. This proposed rule does not impose an information collection burden under the provisions of the Paperwork Reduction Act of 1995 (44 U.S.C. 3501 *et seq.*).

List of Subjects in 40 CFR Part 52

Environmental protection, Air pollution control, Carbon monoxide, Intergovernmental relations, Lead, Nitrogen dioxide, Ozone, Particulate matter, Reporting and recordkeeping requirements, Sulfur oxides, Volatile organic compounds.

Authority: 42 U.S.C. 7401 *et seq.*

Dated: June 11, 2007.

Lawrence E. Starfield,

Acting Regional Administrator, Region 6.

[FR Doc. E7–11942 Filed 6–19–07; 8:45 am]

BILLING CODE 6560–50–P

ENVIRONMENTAL PROTECTION AGENCY

40 CFR Parts 52 and 81

[EPA–R05–OAR–2006–0956; FRL–8328–9]

Approval and Promulgation of Implementation Plans and Designation of Areas for Air Quality Planning Purposes; Ohio; Redesignation of Dayton-Springfield Area to Attainment for Ozone

AGENCY: Environmental Protection Agency (EPA).

ACTION: Proposed rule.

SUMMARY: EPA is proposing to make a determination under the Clean Air Act (CAA) that the nonattainment area of Dayton-Springfield, Ohio (Clark, Green, Miami, and Montgomery Counties) has attained the 8-hour ozone National Ambient Air Quality Standard (NAAQS). This determination is based on complete, quality-assured ambient air quality monitoring data for the 2004–2006 seasons that demonstrate that the 8-hour ozone NAAQS have been attained in the area. EPA is also proposing to approve, as a revision to the Ohio State Implementation Plan (SIP), the State's plan for maintaining the 8-hour ozone NAAQS through 2018 in the area.

EPA is proposing to approve a request from the State of Ohio to redesignate the Dayton-Springfield area to attainment of the 8-hour ozone NAAQS. The Ohio Environmental Protection Agency (OEPA) submitted this request on November 6, 2006 and supplemented it on November 29, 2006, December 4, 2006, December 13, 2006, January 11, 2007, March 9, 2007, March 27, 2007, and May 31, 2007. EPA is also proposing to approve the State's 2005 and 2018 Motor Vehicle Emission Budgets (MVEBs) for the Dayton-Springfield area.

DATES: Comments must be received on or before July 20, 2007.

ADDRESSES: Submit your comments, identified by Docket ID No. EPA–R05–OAR–2006–0956, by one of the following methods:

1. *www.regulations.gov:* Follow the on-line instructions for submitting comments.
2. *E-mail: mooney.john@epa.gov.*
3. *Fax:* (312) 886–5824.
4. *Mail:* John M. Mooney, Chief, Criteria Pollutant Section, Air Programs Branch (AR–18J), U.S. Environmental Protection Agency, 77 West Jackson Boulevard, Chicago, Illinois 60604.
5. *Hand delivery:* John M. Mooney, Chief, Criteria Pollutant Section, Air Programs Branch (AR–18J), U.S. Environmental Protection Agency, 77 West Jackson Boulevard, 18th floor, Chicago, Illinois 60604. Such deliveries are only accepted during the Regional Office normal hours of operation, and special arrangements should be made for deliveries of boxed information. The Regional Office official hours of business are Monday through Friday, 8:30 a.m. to 4:30 p.m. excluding federal holidays.

Instructions: Direct your comments to Docket ID No. EPA–R05–OAR–2006–0956. EPA's policy is that all comments received will be included in the public docket without change and may be made available online at *http://www.regulations.gov*, including any personal information provided, unless the comment includes information claimed to be Confidential Business Information (CBI) or other information whose disclosure is restricted by statute. Do not submit information that you consider to be CBI or otherwise protected through www.regulations.gov or e-mail. The www.regulations.gov Web site is an ''anonymous access'' system, which means EPA will not know your identity or contact information unless you provide it in the body of your comment. If you send an e-mail comment directly to EPA without going through www.regulations.gov, your e-mail address will be automatically captured and included as part of the comment that is placed in the public docket and made available on the Internet. If you submit an electronic comment, EPA recommends that you include your name and other contact information in the body of your comment and with any disk or CD–ROM you submit. If EPA cannot read your comment due to technical difficulties and cannot contact you for clarification, EPA may not be able to consider your comment. Electronic files should avoid the use of special characters, any form of encryption, and be free of any defects or viruses. For additional instructions on submitting comments, go to Section I of the **SUPPLEMENTARY INFORMATION** section of this document.

Docket: All documents in the docket are listed in the www.regulations.gov

index. Although listed in the index, some information is not publicly available, e.g., CBI or other information whose disclosure is restricted by statute. Certain other material, such as copyrighted material, will be publicly available only in hard copy. Publicly available docket materials are available either electronically in www.regulations.gov or in hard copy at the Environmental Protection Agency, Region 5, Air and Radiation Division, 77 West Jackson Boulevard, Chicago, Illinois 60604. This facility is open from 8:30 a.m. to 4:30 p.m., Monday through Friday, excluding legal holidays. We recommend that you telephone Kathleen D'Agostino, Environmental Engineer, at (312) 886–1767 before visiting the Region 5 office.

FOR FURTHER INFORMATION CONTACT: Kathleen D'Agostino, Environmental Engineer, Criteria Pollutant Section, Air Programs Branch (AR–18J), Environmental Protection Agency, Region 5, 77 West Jackson Boulevard, Chicago, Illinois 60604, (312) 886–1767, *dagostino.kathleen@epa.gov*.

SUPPLEMENTARY INFORMATION: Throughout this document whenever ''we,'' ''us,'' or ''our'' is used, we mean EPA. This supplementary information section is arranged as follows:

Table of Contents

I. What Should I Consider as I Prepare My Comments for EPA?
II. What Actions Is EPA Proposing To Take?
III. What Is the Background for These Actions?
A. What Is the General Background Information?
B. What Is the Impact of the December 22, 2006 United States Court of Appeals Decision Regarding EPA's Phase 1 Implementation Rule?
IV. What Are the Criteria for Redesignation?
V. Why Is EPA Proposing To Take These Actions?
VI. What Is the Effect of These Actions?
VII. What Is EPA's Analysis of the Requests?
A. Attainment Determination and Redesignation
B. Adequacy of Ohio's MVEBs
VIII. What Actions Is EPA Taking?
IX. Statutory and Executive Order Reviews

I. What Should I Consider as I Prepare My Comments for EPA?

When submitting comments, remember to:

1. Identify the rulemaking by docket number and other identifying information (subject heading, **Federal Register** date and page number).

2. Follow directions—The EPA may ask you to respond to specific questions or organize comments by referencing a Code of Federal Regulations (CFR) part or section number.

3. Explain why you agree or disagree; suggest alternatives and substitute language for your requested changes.

4. Describe any assumptions and provide any technical information and/or data that you used.

5. If you estimate potential costs or burdens, explain how you arrived at your estimate in sufficient detail to allow for it to be reproduced.

6. Provide specific examples to illustrate your concerns, and suggest alternatives.

7. Explain your views as clearly as possible, avoiding the use of profanity or personal threats.

8. Make sure to submit your comments by the comment period deadline identified.

II. What Actions is EPA Proposing To Take?

EPA is proposing to take several related actions. EPA is proposing to make a determination that the Dayton-Springfield nonattainment area has attained the 8-hour ozone standard and that this area has met the requirements for redesignation under section 107(d)(3)(E) of the CAA. EPA is thus proposing to approve Ohio's request to change the legal designation of the Dayton-Springfield area from nonattainment to attainment for the 8-hour ozone NAAQS. EPA is also proposing to approve Ohio's maintenance plan SIP revision for Dayton-Springfield (such approval being one of the CAA criteria for redesignation to attainment status). The maintenance plan is designed to keep the Dayton-Springfield area in attainment of the ozone NAAQS through 2018. Additionally, EPA is proposing to approve the newly-established 2005 and 2018 MVEBs for the Dayton-Springfield area. The adequacy comment period for the MVEBs began on November 14, 2006, with EPA's posting of the availability of the submittal on EPA's Adequacy Web site (at *http://www.epa.gov/otaq/stateresources/transconf/adequacy.htm).* The adequacy comment period for these MVEBs ended on December 14, 2006. EPA did not receive any requests for this submittal, or adverse comments on this submittal during the adequacy comment period. On April 3, 2007, EPA published a **Federal Register** notice announcing the adequacy of the 2005 and 2018 MVEBs. Please see the Adequacy section of this rulemaking for further explanation on this process. Therefore, we find adequate, and are proposing to approve, the State's 2005 and 2018 MVEBs for transportation conformity purposes.

III. What Is the Background for These Actions?

A. What Is the General Background Information?

Ground-level ozone is not emitted directly by sources. Rather, emissions of nitrogen oxides (NO_X) and volatile organic compounds (VOCs) react in the presence of sunlight to form ground-level ozone. NO_X and VOCs are referred to as precursors of ozone.

The CAA establishes a process for air quality management through the NAAQS. Before promulgation of the current 8-hour standard, the ozone NAAQS was based on a 1-hour standard. On November 6, 1991 (56 FR 56693 and 56813), the Dayton-Springfield area was designated as a moderate nonattainment area under the 1-hour ozone NAAQS. The area was subsequently redesignated to attainment of the 1-hour standard on May 5, 1995 (60 FR 22289). At the time EPA revoked the 1-hour ozone NAAQS, on June 15, 2005, the Dayton-Springfield area was designated as attainment under the 1-hour ozone NAAQS.

On July 18, 1997, EPA promulgated a revised 8-hour ozone standard of 0.08 parts per million (ppm). This new standard is more stringent than the previous 1-hour standard. On April 30, 2004 (69 FR 23857), EPA published a final rule designating and classifying areas under the 8-hour ozone NAAQS. These designations and classifications became effective June 15, 2004. The CAA required EPA to designate as nonattainment any area that was violating the 8-hour ozone NAAQS based on the three most recent years of air quality data, 2001–2003.

The CAA contains two sets of provisions, subpart 1 and subpart 2, that address planning and control requirements for nonattainment areas. (Both are found in title I, part D, 42 U.S.C. 7501–7509a and 7511–7511f, respectively.) Subpart 1 contains general requirements for nonattainment areas for any pollutant, including ozone, governed by a NAAQS. Subpart 2 provides more specific requirements for ozone nonattainment areas.

Under EPA's 8-hour ozone implementation rule, (69 FR 23951 (April 30, 2004)), an area was classified under subpart 2 based on its 8-hour ozone design value (i.e., the 3-year average annual fourth-highest daily maximum 8-hour average ozone concentration), if it had a 1-hour design value at the time of designation at or above 0.121 ppm (the lowest 1-hour design value in Table 1 of subpart 2) (69 FR 23954). All other areas are covered under subpart 1, based upon their 8-

hour design values (69 FR 23958). The Dayton-Springfield area was designated as a subpart 1, 8-hour ozone nonattainment area by EPA on April 30, 2004, (69 FR 23857, 23927) based on air quality monitoring data from 2001–2003 (69 FR 23860).

40 CFR 50.10 and 40 CFR Part 50, Appendix I provide that the 8-hour ozone standard is attained when the 3-year average of the annual fourth-highest daily maximum 8-hour average ozone concentration is less than or equal to 0.08 ppm, when rounded. The data completeness requirement is met when the average percent of days with valid ambient monitoring data is greater than 90%, and no single year has less than 75% data completeness. See 40 CFR Part 50, Appendix I, 2.3(d).

On November 6, 2006, Ohio requested that EPA redesignate the Dayton-Springfield area to attainment for the 8-hour ozone standard. Ohio supplemented its submittal on November 29, 2006, December 4, 2006, December 13, 2006, January 11, 2007, March 9, 2007, March 27, 2007, and May 31, 2007. The redesignation request included three years of complete, quality-assured data for the period of 2004 through 2006, indicating the 8-hour NAAQS for ozone had been attained for the Dayton-Springfield area. Under the CAA, nonattainment areas may be redesignated to attainment if sufficient complete, quality-assured data are available for the Administrator to determine that the area has attained the standard, and the area meets the other CAA redesignation requirements in section 107(d)(3)(E).

B. What Is the Impact of the December 22, 2006 United States Court of Appeals Decision Regarding EPA's Phase 1 Implementation Rule?

1. Summary of Court Decision

On December 22, 2006, the U.S. Court of Appeals for the District of Columbia Circuit vacated EPA's Phase 1 Implementation Rule for the 8-hour Ozone Standard. (69 23951, April 30, 2004). *South Coast Air Quality Management Dist.* v. *EPA,* 472 F.3d 882 (D.C. Cir. 2006). The Court held that certain provisions of EPA's Phase 1 Rule were inconsistent with the requirements of the CAA. The Court rejected EPA's reasons for implementing the 8-hour standard in nonattainment areas under Subpart 1 in lieu of subpart 2 of Title I, part D of the Act. The Court also held that EPA improperly failed to retain four measures required for 1-hour nonattainment areas under the anti-backsliding provisions of the regulations: (1) Nonattainment area New Source Review (NSR) requirements based on an area's 1-hour nonattainment classification; (2) Section 185 penalty fees for 1-hour severe or extreme nonattainment areas; (3) Measures to be implemented pursuant to section 172(c)(9) or 182(c)(9) of the Act, on the contingency of an area not making reasonable further progress toward attainment of the 1-hour NAAQS, or for failure to attain that NAAQS; and (4) certain conformity requirements for certain types of federal actions. The Court upheld EPA's authority to revoke the 1-hour standard provided there were adequate anti-backsliding provisions.

This section sets forth EPA's views on the potential effect of the Court's ruling on this redesignation action. For the reasons set forth below, EPA does not believe that the Court's ruling alters any requirements relevant to this redesignation action so as to preclude redesignation, and does not prevent EPA from finalizing this redesignation. EPA believes that the Court's decision, as it currently stands or as it may be modified based upon any petition for rehearing that has been filed, imposes no impediment to moving forward with redesignation of this area to attainment, because in either circumstance redesignation is appropriate under the relevant redesignation provisions of the Act and longstanding policies regarding redesignation requests.

2. Requirements Under the 8-Hour Standard

With respect to the 8-hour standard, the Court's ruling rejected EPA's reasons for classifying areas under Subpart 1 for the 8-hour standard, and remanded that matter to the Agency. Consequently, it is possible that this area could, during a remand to EPA, be reclassified under Subpart 2. Although any future decision by EPA to classify this area under Subpart 2 might trigger additional future requirements for the area, EPA believes that this does not mean that redesignation cannot now go forward. This belief is based upon: (1) EPA's longstanding policy of evaluating State submissions in accordance with the requirements due at the time the request is submitted; and, (2) consideration of the inequity of applying retroactively any future requirements.

First, at the time the redesignation request was submitted, the Dayton-Springfield area was classified under Subpart 1 and was obligated to meet Subpart 1 requirements. Under EPA's longstanding interpretation of section 107(d)(3)(E) of the CAA, to qualify for redesignation, states requesting redesignation to attainment must meet only the relevant SIP requirements that came due prior to the submittal of a complete redesignation request. September 4, 1992, Calcagni memorandum (''Procedures for Processing Requests to Redesignate Areas to Attainment,'' Memorandum from John Calcagni, Director, Air Quality Management Division) See also Michael Shapiro Memorandum, September 17, 1993, and 60 FR 12459, 12465–66 (March 7, 1995) (Redesignation of Detroit-Ann Arbor). See *Sierra Club* v. *EPA*, 375 F.3d 537 (7th Cir. 2004), which upheld this interpretation. See, e.g. also 68 FR 25418, 25424, 25427 (May 12, 2003) (redesignation of St. Louis).

Moreover, it would be inequitable to retroactively apply any new SIP requirements that were not applicable at the time the request was submitted. The D.C. Circuit has recognized the inequity in such retroactive rulemaking, See *Sierra Club* v. *Whitman*, 285 F. 3d 63 (D.C. Cir. 2002), in which the D.C. Circuit upheld a District Court's ruling refusing to make retroactive an EPA determination of nonattainment that was past the statutory due date. Such a determination would have resulted in the imposition of additional requirements on the area. The Court stated: ''Although EPA failed to make the nonattainment determination within the statutory time frame, Sierra Club's proposed solution only makes the situation worse. Retroactive relief would likely impose large costs on the States, which would face fines and suits for not implementing air pollution prevention plans in 1997, even though they were not on notice at the time.'' Id. at 68. Similarly here it would be unfair to penalize the area by applying to it for purposes of redesignation additional SIP requirements under Subpart 2 that were not in effect at the time it submitted its redesignation request.

3. Requirements Under the 1-Hour Standard

With respect to the requirements under the 1-hour standard, the Dayton-Springfield area was an attainment area subject to a CAA section 175A maintenance plan under the 1-hour standard. The Court's ruling does not impact redesignation requests for these types of areas.

First, there are no conformity requirements that are relevant for redesignation requests for any standard, including the requirement to submit a transportation conformity SIP. Under longstanding EPA policy, EPA believes that it is reasonable to interpret the conformity SIP requirement as not applying for purposes of evaluating a redesignation request under section

107(d) because state conformity rules are still required after redesignation and federal conformity rules apply where state rules have not been approved. 40 CFR 51.390. See *Wall* v. *EPA*, 265 F.3d 426 (6th Cir. 2001), upholding this interpretation. See also 60 FR 62748 (December 7, 1995) (Tampa, FL redesignation).

Federal transportation conformity regulations apply in all States prior to approval of transportation conformity SIPs. The Dayton-Springfield, Ohio 1-hour ozone area was redesignated to attainment without approved State transportation conformity regulations because the federal regulations were in effect in Ohio. When challenged, these 1-hour ozone redesignations, which were approved without state regulations, were upheld by the courts. See *Wall* v. *EPA*, 265 F.3d 426 (6th Cir. 2001). See also 60 FR 62748 (December 7, 1995) (Tampa, Florida). Although Ohio does not have approved state transportation conformity regulations, it has developed memoranda of understanding, signed by all parties involved in conformity, to address conformity consultation procedures. The federal transportation conformity regulations, which apply in Ohio, require the approved 1-hour ozone budgets to be used for transportation conformity purposes prior to 8-hour ozone budgets being approved.

Second, with respect to the three other anti-backsliding provisions for the 1-hour standard that the Court found were not properly retained, the Dayton-Springfield area is an attainment area subject to a maintenance plan for the 1-hour standard, and the NSR, contingency measure (pursuant to section 172(c)(9) or 182(c)(9)) and fee provision requirements no longer apply to an area that has been redesignated to attainment of the 1-hour standard.

Thus, the decision in South Coast should not alter requirements that would preclude EPA from finalizing the redesignation of this area.

IV. What Are the Criteria for Redesignation?

The CAA provides the requirements for redesignating a nonattainment area to attainment. Specifically, section 107(d)(3)(E) allows for redesignation provided that: (1) The Administrator determines that the area has attained the applicable NAAQS; (2) the Administrator has fully approved the applicable implementation plan for the area under section 110(k); (3) the Administrator determines that the improvement in air quality is due to permanent and enforceable reductions in emissions resulting from implementation of the applicable SIP and applicable federal air pollutant control regulations and other permanent and enforceable reductions; (4) the Administrator has fully approved a maintenance plan for the area as meeting the requirements of section 175A; and, (5) the state containing such area has met all requirements applicable to the area under section 110 and part D.

EPA provided guidance on redesignation in the General Preamble for the Implementation of Title I of the CAA Amendments of 1990, on April 16, 1992 (57 FR 13498), and supplemented this guidance on April 28, 1992 (57 FR 18070). EPA has provided further guidance on processing redesignation requests in the following documents:

''Ozone and Carbon Monoxide Design Value Calculations,'' Memorandum from William G. Laxton, Director Technical Support Division, June 18, 1990;

''Maintenance Plans for Redesignation of Ozone and Carbon Monoxide Nonattainment Areas,'' Memorandum from G.T. Helms, Chief, Ozone/Carbon Monoxide Programs Branch, April 30, 1992;

''Contingency Measures for Ozone and Carbon Monoxide (CO) Redesignations,'' Memorandum from G.T. Helms, Chief, Ozone/Carbon Monoxide Programs Branch, June 1, 1992;

''Procedures for Processing Requests to Redesignate Areas to Attainment,'' Memorandum from John Calcagni, Director, Air Quality Management Division, September 4, 1992;

''State Implementation Plan (SIP) Actions Submitted in Response to Clean Air Act (ACT) Deadlines,'' Memorandum from John Calcagni, Director, Air Quality Management Division, October 28, 1992;

''Technical Support Documents (TSD's) for Redesignation Ozone and Carbon Monoxide (CO) Nonattainment Areas,'' Memorandum from G.T. Helms, Chief, Ozone/Carbon Monoxide Programs Branch, August 17, 1993;

''State Implementation Plan (SIP) Requirements for Areas Submitting Requests for Redesignation to Attainment of the Ozone and Carbon Monoxide (CO) National Ambient Air Quality Standards (NAAQS) On or After November 15, 1992,'' Memorandum from Michael H. Shapiro, Acting Assistant Administrator for Air and Radiation, September 17, 1993;

''Use of Actual Emissions in Maintenance Demonstrations for Ozone and CO Nonattainment Areas,'' Memorandum from D. Kent Berry, Acting Director, Air Quality Management Division, to Air Division Directors, Regions 1–10, dated November 30, 1993.

''Part D New Source Review (part D NSR) Requirements for Areas Requesting Redesignation to Attainment,'' Memorandum from Mary D. Nichols, Assistant Administrator for Air and Radiation, October 14, 1994; and

''Reasonable Further Progress, Attainment Demonstration, and Related Requirements for Ozone Nonattainment Areas Meeting the Ozone National Ambient Air Quality Standard,'' Memorandum from John S. Seitz, Director, Office of Air Quality Planning and Standards, May 10, 1995.''

V. Why Is EPA Proposing To Take These Actions?

On November 6, 2006, Ohio requested redesignation of the Dayton-Springfield area to attainment for the 8-hour ozone standard. Ohio supplemented its submittal on November 29, 2006, December 4, 2006, December 13, 2006, January 5, 2007, January 11, 2007, March 9, 2007, March 27, 2007, and May 31, 2007. EPA believes that the area has attained the standard and has met the requirements for redesignation set forth in section 107(d)(3)(E) of the CAA.

VI. What Is the Effect of These Actions?

Approval of the redesignation request would change the official designation of the area for the 8-hour ozone NAAQS found at 40 CFR part 81. It would also incorporate into the Ohio SIP a plan for maintaining the 8-hour ozone NAAQS through 2018. The maintenance plan includes contingency measures to remedy future violations of the 8-hour NAAQS. It also establishes MVEBs of 29.19 and 14.73 tons per day (tpd) VOC and 63.88 and 21.42 tpd NO_X for the years 2005 and 2018, respectively.

VII. What Is EPA's Analysis of the Requests?

A. Attainment Determination and Redesignation

EPA is proposing to make a determination that the Dayton-Springfield area has attained the 8-hour ozone standard and that the area has met all other applicable section 107(d)(3)(E) redesignation criteria. The basis for EPA's determination is as follows:

1. The Area Has Attained the 8-Hour Ozone NAAQS. (Section 107(d)(3)(E)(i))

EPA is proposing to make a determination that the Dayton-Springfield area has attained the 8-hour ozone NAAQS. For ozone, an area may be considered to be attaining the 8-hour

ozone NAAQS if there are no violations, as determined in accordance with 40 CFR 50.10 and part 50, Appendix I, based on three complete, consecutive calendar years of quality-assured air quality monitoring data. To attain this standard, the 3-year average of the fourth-highest daily maximum 8-hour average ozone concentrations measured at each monitor within an area over each year must not exceed 0.08 ppm. Based on the rounding convention described in 40 CFR part 50, Appendix I, the standard is attained if the design value is 0.084 ppm or below. The data must be collected and quality-assured in accordance with 40 CFR part 58, and recorded in the Aerometric Information Retrieval System (AIRS). The monitors generally should have remained at the same location for the duration of the monitoring period required for demonstrating attainment.

OEPA submitted ozone monitoring data for the 2004 to 2006 ozone seasons. The OEPA quality-assured the ambient monitoring in accordance with 40 CFR 58.10, and recorded it in the AIRS database, thus making the data publicly available. The data meet the completeness criteria in 40 CFR 50, Appendix I, which requires a minimum completeness of 75 percent annually and 90 percent over each three year period. Monitoring data is presented in Table 1 below. Data completeness information is presented in Table 2 below.

TABLE 1.—ANNUAL 4TH HIGH DAILY MAXIMUM 8-HOUR OZONE CONCENTRATION AND 3-YEAR AVERAGES OF 4TH HIGH DAILY MAXIMUM 8-HOUR OZONE CONCENTRATIONS

County	Monitor	2004 4th high (ppm)	2005 4th high (ppm)	2006 4th high (ppm)	2004–2006 average 4th high (ppm)
Clark	Springfield, 39–023–001	0.079	0.086	0.076	0.080
	Mud Run, 39–023–0003	0.073	0.081	0.074	0.076
Greene	Xenia, 39–057–0006	0.075	0.083	0.079	0.079
Miami	Miami, 39–109–0005	0.075	0.079	0.073	0.076
Montgomery	Webster, 39–113–0033	0.067	0.082	0.071	0.073

TABLE 2.—DATA COMPLETENESS IN PERCENT (%)

County	Monitor	2004 (%)	2005 (%)	2006 (%)	2004–2006 average (%)
Clark	Springfield, 39–023–001	100	99	100	100
	Mud Run, 39–023–0003	99	99	100	99
Greene	Xenia, 39–057–0006	100	100	100	100
Miami	Miami, 39–109–0005	99	100	99	99
Montgomery	Webster, 39–113–0033	98	100	100	99

In addition, as discussed below with respect to the maintenance plans, OEPA has committed to continue operating the ozone monitors listed above. OEPA has also committed to consult with EPA prior to making changes to the existing monitoring network, should changes become necessary in the future. OEPA will continue to quality assure and report monitoring data in accordance with 40 CFR part 58 and all other federal requirements. In summary, EPA believes that the data submitted by Ohio provide an adequate demonstration that the Dayton-Springfield area has attained the 8-hour ozone NAAQS.

2. The Area Has Met All Applicable Requirements Under Section 110 and Part D; and the Area Has a Fully Approved SIP Under Section 110(k). (Sections 107(d)(3)(E)(v) and 107(d)(3)(E)(ii))

We have determined that Ohio has met all currently applicable SIP requirements for purposes of redesignation for the Dayton-Springfield area under Section 110 of the CAA (general SIP requirements). We have also determined that the Ohio SIP meets all SIP requirements currently applicable for purposes of redesignation under part D of Title I of the CAA (requirements specific to Subpart 1 nonattainment areas), in accordance with section 107(d)(3)(E)(v). In addition, we have determined that the Ohio SIP is fully approved with respect to all applicable requirements for purposes of redesignation, in accordance with section 107(d)(3)(E)(ii). In making these determinations, we have ascertained what SIP requirements are applicable to the area for purposes of redesignation, and have determined that the portions of the SIP meeting these requirements are fully approved under section 110(k) of the CAA. As discussed more fully below, SIPs must be fully approved only with respect to currently applicable requirements of the CAA.

a. The Dayton-Springfield Area Has Met All Applicable Requirements Under Section 110 and Part D of the CAA

The September 4, 1992 Calcagni memorandum (see ''Procedures for Processing Requests to Redesignate Areas to Attainment,'' Memorandum from John Calcagni, Director, Air Quality Management Division, September 4, 1992) describes EPA's interpretation of section 107(d)(3)(E) of the CAA. Under this interpretation, a state and the area it wishes to redesignate must meet the relevant CAA requirements that are due prior to the state's submittal of a complete redesignation request for the area. See also the September 17, 1993 Michael Shapiro memorandum and 60 FR 12459, 12465–66 (March 7, 1995) (redesignation of Detroit-Ann Arbor, Michigan to attainment of the 1-hour ozone NAAQS). Applicable requirements of the CAA that come due subsequent to the state's submittal of a complete request remain applicable until a redesignation to attainment is approved, but are not required as a prerequisite to redesignation. See section 175A(c) of the CAA. *Sierra Club* v. *EPA*, 375 F.3d 537 (7th Cir. 2004). See also 68 FR 25424, 25427 (May 12, 2003) (redesignation of the St. Louis/East St. Louis area to attainment of the 1-hour ozone NAAQS).

General SIP requirements. Section 110(a) of title I of the CAA contains the general requirements for a SIP. Section

110(a)(2) provides that the implementation plan submitted by a state must have been adopted by the state after reasonable public notice and hearing, and that, among other things, it includes enforceable emission limitations and other control measures, means or techniques necessary to meet the requirements of the CAA; provides for establishment and operation of appropriate devices, methods, systems and procedures necessary to monitor ambient air quality; provides for implementation of a source permit program to regulate the modification and construction of any stationary source within the areas covered by the plan; includes provisions for the implementation of part C, Prevention of Significant Deterioration (PSD) and part D, NSR permit programs; includes criteria for stationary source emission control measures, monitoring, and reporting; includes provisions for air quality modeling; and provides for public and local agency participation in planning and emission control rule development.

Section 110(a)(2)(D) of the CAA requires that SIPs contain measures to prevent sources in a state from significantly contributing to air quality problems in another state. To implement this provision, EPA has required certain states to establish programs to address transport of air pollutants (NO_X SIP Call,[1] Clean Air Interstate Rule (CAIR) (70 FR 25162)). However, the section 110(a)(2)(D) requirements for a state are not linked with a particular nonattainment area's designation and classification. EPA believes that the requirements linked with a particular nonattainment area's designation and classification are the relevant measures to evaluate in reviewing a redesignation request. When the transport SIP submittal requirements are applicable to a state, they will continue to apply to the state regardless of the attainment designation of any one particular area in the state. Therefore, we believe that these requirements should not be construed to be applicable requirements for purposes of redesignation. Further, we believe that the other section 110 elements described above that are not connected with nonattainment plan submissions and not linked with an area's attainment status are also not applicable requirements for purposes of redesignation. A state remains subject to these requirements after an area is redesignated to attainment. We conclude that only the section 110 and part D requirements which are linked with a particular area's designation and classification are the relevant measures which we may consider in evaluating a redesignation request. This approach is consistent with EPA's existing policy on applicability of conformity and oxygenated fuels requirements for redesignation purposes, as well as with section 184 ozone transport requirements. See Reading, Pennsylvania, proposed and final rulemakings (61 FR 53174–53176, October 10, 1996), (62 FR 24826, May 7, 1997); Cleveland-Akron-Lorain, Ohio, final rulemaking (61 20458, May 7, 1996); and Tampa, Florida, final rulemaking (60 FR 62748, December 7, 1995). See also the discussion on this issue in the Cincinnati ozone redesignation (65 FR 37890, June 19, 2000), and in the Pittsburgh ozone redesignation (66 FR 50399, October 19, 2001).

As discussed above, we believe that section 110 elements which are not linked to the area's nonattainment status are not applicable for purposes of redesignation. Because there are no section 110 requirements linked to the part D requirements for 8-hour ozone nonattainment areas that have become due, as explained below, there are no part D requirements applicable for purposes of redesignation under the 8-hour standard.

Part D Requirements. EPA has determined that the Ohio SIP meets applicable SIP requirements under part D of the CAA, since no requirements applicable for purposes of redesignation became due for the 8-hour ozone standard prior to OEPA's submission of the redesignation request for the Dayton-Springfield area. Under part D, an area's classification determines the requirements to which it will be subject. Subpart 1 of part D, found in sections 172–176 of the CAA, sets forth the basic nonattainment requirements applicable to all nonattainment areas. Section 182 of the CAA, found in subpart 2 of part D, establishes additional specific requirements depending on the area's nonattainment classification. The Dayton-Springfield area was classified as a subpart 1 nonattainment area, and, therefore, subpart 2 requirements do not apply.

Part D, Subpart 1 applicable SIP requirements. For purposes of evaluating these redesignation requests, the applicable part D, subpart 1 SIP requirements for the Dayton-Springfield area are contained in sections 172(c)(1)–(9). A thorough discussion of the requirements contained in section 172 can be found in the General Preamble for Implementation of Title I (57 FR 13498, April 16, 1992).

No requirements applicable for purposes of redesignation under part D became due prior to submission of the redesignation request, and, therefore, none are applicable to the areas for purposes of redesignation. Since the State of Ohio has submitted a complete ozone redesignation request for the Dayton-Springfield area prior to the deadline for any submissions required for purposes of redesignation, we have determined that these requirements do not apply to the Dayton-Springfield area for purposes of redesignation.

Furthermore, EPA has determined that, since PSD requirements will apply after redesignation, areas being redesignated need not comply with the requirement that a NSR program be approved prior to redesignation, provided that the area demonstrates maintenance of the NAAQS without part D NSR. A more detailed rationale for this view is described in a memorandum from Mary Nichols, Assistant Administrator for Air and Radiation, dated October 14, 1994, entitled, ''Part D New Source Review Requirements for Areas Requesting Redesignation to Attainment.'' Ohio has demonstrated that the area to be redesignated will be able to maintain the standard without part D NSR in effect; therefore, EPA concludes that the State need not have a fully approved part D NSR program prior to approval of the redesignation request. The State's PSD program will become effective in the Dayton-Springfield area upon redesignation to attainment. See rulemakings for Detroit, Michigan (60 FR 12467–12468, March 7, 1995); Cleveland-Akron-Lorain, Ohio (61 FR 20458, 20469–20470, May 7, 1996); Louisville, Kentucky (66 FR 53665, October 23, 2001); and Grand Rapids, Michigan (61 FR 31834–31837, June 21, 1996).

Section 176 conformity requirements. Section 176(c) of the CAA requires states to establish criteria and procedures to ensure that federally-supported or funded activities, including highway projects, conform to the air quality planning goals in the applicable SIPs. The requirement to determine conformity applies to transportation plans, programs and projects developed, funded or approved under Title 23 of the U.S. Code and the Federal Transit Act (transportation

[1] On October 27, 1998 (63 FR 57356), EPA issued a NO_X SIP call requiring the District of Columbia and 22 states, including Ohio, to reduce emissions of NO_X in order to reduce the transport of ozone and ozone precursors. In compliance with EPA's NO_X SIP call, OEPA has developed rules governing the control of NO_X emissions from Electric Generating Units (EGUs), major non-EGU industrial boilers, and major cement kilns. EPA approved Ohio's rules as fulfilling Phase I of the NO_X SIP Call on June 27, 2005 (70 FR 36845).

conformity) as well as to all other federally-supported or funded projects (general conformity). State conformity revisions must be consistent with federal conformity regulations relating to consultation, enforcement and enforceability, which EPA promulgated pursuant to CAA requirements.

EPA believes that it is reasonable to interpret the conformity SIP requirements as not applying for purposes of evaluating the redesignation request under section 107(d) for two reasons. First, the requirement to submit SIP revisions to comply with the conformity provisions of the CAA continues to apply to areas after redesignation to attainment since such areas would be subject to a section 175A maintenance plan. Second, EPA's federal conformity rules require the performance of conformity analyses in the absence of federally-approved state rules. Therefore, because areas are subject to the conformity requirements regardless of whether they are redesignated to attainment and, because they must implement conformity under federal rules if state rules are not yet approved, EPA believes it is reasonable to view these requirements as not applying for purposes of evaluating a redesignation request. See *Wall* v. *EPA*, 265 F.3d 426 (6th Cir. 2001), upholding this interpretation. See also 60 FR 62748, 62749–62750 (Dec. 7, 1995) (Tampa, Florida).

EPA approved Ohio's general and transportation conformity SIPs on March 11, 1996 (61 FR 9646) and May 30, 2000 (65 FR 34395), respectively. Ohio has submitted on-highway motor vehicle budgets for the Dayton-Springfield area of 29.19 and 14.73 tpd VOC and 63.88 and 21.42 tpd NO_X for the years 2005 and 2018, respectively. The area must use the MVEBs from the maintenance plan in any conformity determination that is effective on or after the effective date of the maintenance plan approval. Thus, the Dayton-Springfield area has satisfied all applicable requirements under section 110 and part D of the CAA.

b. The Dayton-Springfield Area Has a Fully Approved Applicable SIP Under Section 110(k) of the CAA

EPA has fully approved the Ohio SIP for the Dayton-Springfield area under section 110(k) of the CAA for all requirements applicable for purposes of redesignation. EPA may rely on prior SIP approvals in approving a redesignation request (See the September 4, 1992 John Calcagni memorandum, page 3, *Southwestern Pennsylvania Growth Alliance* v. *Browner*, 144 F.3d 984, 989–990 (6th Cir. 1998), *Wall* v. *EPA*, 265 F.3d 426 (6th Cir. 2001)) plus any additional measures it may approve in conjunction with a redesignation action. See 68 FR 25413, 25426 (May 12, 2003). Since the passage of the CAA of 1970, Ohio has adopted and submitted, and EPA has fully approved, provisions addressing the various required SIP elements applicable to the Dayton-Springfield area under the 1-hour ozone standard. No Dayton-Springfield area SIP provisions are currently disapproved, conditionally approved, or partially approved.

3. The Improvement in Air Quality Is Due to Permanent and Enforceable Reductions in Emissions Resulting From Implementation of the SIP and Applicable Federal Air Pollution Control Regulations and Other Permanent and Enforceable Reductions. (Section 107(d)(3)(E)(iii))

EPA finds that Ohio has demonstrated that the observed air quality improvement in the Dayton-Springfield area is due to permanent and enforceable reductions in emissions resulting from implementation of the SIP, federal measures, and other state-adopted measures.

In making this demonstration, the State has calculated the change in emissions between 2002 and 2005, one of the years the Dayton-Springfield area monitored attainment. The reduction in emissions and the corresponding improvement in air quality over this time period can be attributed to a number of regulatory control measures that Ohio and upwind areas have implemented in recent years. The Dayton-Springfield is impacted by the transport of ozone and ozone precursors from upwind areas. Therefore, local controls as well as controls implemented in upwind areas are relevant to the improvement in air quality in the Dayton-Springfield area.

a. Permanent and Enforceable Controls Implemented

The following is a discussion of permanent and enforceable measures that have been implemented in the areas:

NO_X rules. In compliance with EPA's NO_X SIP call, Ohio developed rules to control NO_X emissions from Electric Generating Units (EGUs), major non-EGU industrial boilers, and major cement kilns. These rules required sources to begin reducing NO_X emissions in 2004. From 2004 on, NO_X emissions from EGUs and large industrial boilers have been capped at a level well below pre-2002 levels. OEPA expects that NO_X emissions will further decline as the State meets the requirements of EPA's Phase II NO_X SIP call (69 FR 21604 (April 21, 2004)) and CAIR.

Federal Emission Control Measures. Reductions in VOC and NO_X emissions have occurred statewide as a result of federal emission control measures, with additional emission reductions expected to occur in the future as the state implements additional emission controls. Federal emission control measures include: The National Low Emission Vehicle (NLEV) program, Tier 2 emission standards for vehicles, gasoline sulfur limits, low sulfur diesel fuel standards, and heavy-duty diesel engine standards. In addition, in 2004, EPA issued the Clean Air Non-road Diesel Rule (69 FR 38958 (July 29, 2004)). EPA expects this rule to reduce off-road diesel emissions through 2010, with emission reductions starting in 2008.

Control Measures in Upwind Areas. On October 27, 1998 (63 FR 57356), EPA issued a NO_X SIP call requiring the District of Columbia and 22 states, including Ohio, to reduce emissions of NO_X. The reduction in NO_X emissions has resulted in lower concentrations of transported ozone entering the Dayton-Springfield area. Emission reductions resulting from regulations developed in response to the NO_X SIP call are permanent and enforceable.

b. Emission Reductions

Ohio is using 2002 for the nonattainment inventory and 2005, one of the years used to demonstrate monitored attainment of the NAAQS, for the attainment inventory. OEPA developed a 2002 base year inventory which they provided to the Lake Michigan Air Directors Consortium (LADCO). The base year inventory was processed by LADCO to develop summer day emissions for use in regional air quality analyses and attainment demonstration modeling. Area source emissions data were taken from the Ohio 2002 periodic inventory submitted to EPA. Onroad mobile source emissions were calculated using MOBILE6.2. Point source emissions data was compiled from Ohio's STARShip annual emissions inventory database and EPA's 2002 Air Markets acid rain database. Nonroad mobile emissions were generated using EPA's National Mobile Inventory Model (NMIM), with the following exceptions. Recreational motorboat populations and spatial surrogates were updated and emissions estimates were developed for aircraft, commercial marine vessels, and railroads, three nonroad categories not included in NMIM. For 2005, OEPA

estimated point, area, and nonroad mobile source emissions by interpolating between the 2002 inventory and the 2009 inventory described below. Onroad emissions were generated using MOBILE6.2.

Based on the inventories described above, Ohio's submittal documents changes in VOC and NO_X emissions from 2002 to 2005 for the Dayton-Springfield area. Emissions data are shown in Tables 3 through 5 below.

TABLE 3.—DAYTON-SPRINGFIELD AREA: TOTAL VOC AND NO_X EMISSIONS FOR NONATTAINMENT YEAR 2002 (TPD)

	Clark		Greene		Miami		Montgomery		Total	
	VOC	NO_X	VOC	NO_X	VOC	NO_X	VOC	NO_X	VOC	NO_X
Point	0.55	0.11	0.05	9.30	0.29	0.05	2.61	29.32	3.50	38.78
Area	10.40	0.70	5.98	0.67	6.34	0.53	22.35	2.43	45.07	4.33
Nonroad	1.94	3.56	1.79	3.70	1.74	3.49	8.62	12.17	14.09	22.92
Onroad	6.62	14.54	6.22	12.26	4.95	9.88	20.80	41.77	38.59	78.45
Total	19.51	18.91	14.04	25.93	13.32	13.95	54.38	85.69	101.25	144.48

TABLE 4.—DAYTON-SPRINGFIELD AREA: TOTAL VOC AND NO_X EMISSIONS FOR ATTAINMENT YEAR 2005 (TPD)

	Clark		Greene		Miami		Montgomery		Total	
	VOC	NO_X	VOC	NO_X	VOC	NO_X	VOC	NO_X	VOC	NO_X
Point	0.50	0.11	0.05	8.75	0.30	0.05	2.60	27.69	3.45	36.60
Area	11.02	0.75	6.08	0.72	6.46	0.56	22.67	2.62	46.23	4.65
Nonroad	1.68	3.16	1.60	3.37	1.55	3.07	7.33	10.64	12.16	20.24
Onroad	4.98	11.82	4.74	10.04	3.81	8.17	15.66	33.85	29.19	63.88
Total	18.18	15.84	12.47	22.88	12.12	11.85	48.26	74.80	91.03	125.37

TABLE 5.—DAYTON-SPRINGFIELD AREA: COMPARISON OF 2002 AND 2005 VOC AND NO_X EMISSIONS (TPD)

Sector	VOC			NO_X		
	2002	2005	Net change (2002–2005)	2002	2005	Net change (2002–2005)
Point	3.50	3.45	−0.05	38.78	36.60	−2.18
Area	45.07	46.23	1.16	4.33	4.65	0.32
Nonroad	14.09	12.16	−1.93	22.92	20.24	−2.68
Onroad	38.59	29.19	−9.4	78.45	63.88	−14.57
Total	101.25	91.03	−10.22	144.48	125.37	−19.11

Table 5 shows that the Dayton-Springfield area reduced VOC emissions by 10.22 tpd and NO_X emissions by 19.11 tpd between 2000 and 2005. Based on the information summarized above, Ohio has adequately demonstrated that the improvement in air quality is due to permanent and enforceable emissions reductions.

4. The Areas Have Fully Approved Maintenance Plans Pursuant to Section 175a of the CAA. (Section 107(d)(3)(E)(iv))

In conjunction with its requests to redesignate the Dayton-Springfield nonattainment area to attainment status, Ohio submitted a SIP revision to provide for the maintenance of the 8-hour ozone NAAQS in the area through 2018.

a. What is required in a maintenance plan?

Section 175A of the CAA sets forth the required elements of a maintenance plan for areas seeking redesignation from nonattainment to attainment. Under section 175A, the plan must demonstrate continued attainment of the applicable NAAQS for at least ten years after the Administrator approves a redesignation to attainment. Eight years after the redesignation, the State must submit a revised maintenance plan which demonstrates that attainment will continue to be maintained for ten years following the initial ten-year maintenance period. To address the possibility of future NAAQS violations, the maintenance plan must contain contingency measures with a schedule for implementation as EPA deems necessary to assure prompt correction of any future 8-hour ozone violations.

The September 4, 1992 John Calcagni memorandum provides additional guidance on the content of a maintenance plan. The memorandum clarifies that an ozone Maintenance Plan Should Address The Following Items: The attainment VOC and NO_X emissions inventories, a maintenance demonstration showing maintenance for the ten years of the maintenance period, a commitment to maintain the existing monitoring network, factors and procedures to be used for verification of continued attainment of the NAAQS, and a contingency plan to prevent or correct future violations of the NAAQS.

b. Attainment Inventory

The OEPA developed an emissions inventory for 2005, one of the years Ohio used to demonstrate monitored attainment of the 8-hour NAAQS, as described above. The attainment level of emissions is summarized in Table 4, above.

c. Demonstration of Maintenance

Ohio submitted with the redesignation request a revision to the 8-hour ozone SIP to include a maintenance plan for the Dayton-Springfield area, in compliance with section 175A of the CAA. This demonstration shows maintenance of the 8-hour ozone standard through 2018 by assuring that current and future emissions of VOC and NO_X for the Dayton-Springfield area remain at or below attainment year emission levels. A maintenance demonstration need not be based on modeling. See *Wall* v. *EPA*, 265 F.3d 426 (6th Cir. 2001), *Sierra Club* v. *EPA*, 375 F. 3d 537 (7th Cir. 2004). See also 66 FR 53094, 53099–53100 (October 19, 2001), 68 FR 25413, 25430–25432 (May 12, 2003).

Ohio is primarily using inventories developed by LADCO for the years 2009 and 2018. Point and area source emissions were projected from the 2002 base year to 2009 and 2018 using growth factors. LADCO point source estimates have been supplemented with point source emissions projections based upon data compiled from Ohio's STARShip annual emissions inventory database and statewide EGU NO_X budgets from the Ohio NO_X rule. Nonroad mobile emissions were generated for 2009 and 2018 using NMIM, with the following exceptions. Recreational motorboat populations and spatial surrogates were updated and emissions estimates were developed for aircraft, commercial marine vessels, and railroads, three nonroad categories not included in NMIM. The Ohio Department of Transportation prepared onroad mobile source emissions estimates using MOBILE6.2. Modeling for 2009 and 2018 includes implementation of the 7.8 low Reid Vapor Pressure fuels program for the area. It should be noted that because Ohio is in the process of seeking approval of the removal of the vehicle inspection and maintenance (I/M) program from the Dayton-Springfield SIP, MOBILE6.2 modeling was performed assuming no credit for I/M related emissions reductions in 2009 and 2018. This results in conservatively estimating onroad emissions to be higher in 2009 and 2018 than would be the case if the I/M program were to continue to operate. While the issue of I/M program discontinuation will be addressed in a separate action, it should be noted that Ohio's maintenance plan demonstrates that the area can maintain the standard through 2018 without operation of the I/M program. Emissions estimates are presented in Table 6 below.

TABLE 6.—DAYTON-SPRINGFIELD AREA: COMPARISON OF 2005–2018 VOC AND NO_X EMISSIONS (TPD)

Sector	VOC				NO_X			
	2005	2009	2018	Net change 2005–2018	2005	2009	2018	Net change 2005–2018
Point	3.45	3.47	3.72	0.27	36.60	36.24	37.94	1.34
Area	46.23	47.76	52.75	6.52	4.65	5.09	5.45	0.80
Nonroad	12.16	9.62	7.91	−4.25	20.24	16.68	9.84	−10.40
Onroad	29.19	20.50	11.66	−17.53	63.88	46.78	18.50	−45.38
Total	91.03	81.35	76.04	−14.99	125.37	104.79	71.73	−53.64

The emission projections show that OEPA does not expect emissions in the Dayton-Springfield area to exceed the level of the 2005 attainment year inventory during the maintenance period. In the Dayton-Springfield area, OEPA projects that VOC and NO_X emissions will decrease by 14.99 tpd and 53.64 tpd, respectively.

As part of its maintenance plan, the State elected to include a ''safety margin'' for the area. A ''safety margin'' is the difference between the attainment level of emissions (from all sources) and the projected level of emissions (from all sources) in the maintenance plan which continues to demonstrate attainment of the standard. The attainment level of emissions is the level of emissions during one of the years in which the area met the NAAQS. The Dayton-Springfield area attained the 8-hour ozone NAAQS during the 2004–2006 time period. Ohio used 2005 as the attainment level of emissions for the area. In the maintenance plan, OEPA projected emission levels for 2018. For Dayton-Springfield, the emissions from point, area, nonroad, and mobile sources in 2005 equaled 91.03 tpd of VOC. OEPA projected VOC emissions for the year 2018 to be 76.04 tpd of VOC. The SIP submission demonstrates that the Dayton-Springfield area will continue to maintain the standard with emissions at this level. The safety margin for VOC is calculated to be the difference between these amounts or, in this case, 14.99 tpd of VOC for 2018. By this same method, 53.64 tpd (i.e., 125.37 tpd less 71.73 tpd) is the safety margin for NO_X for 2018. The safety margin, or a portion thereof, can be allocated to any of the source categories, as long as the total attainment level of emissions is maintained.

d. Monitoring Network

Ohio currently operates two ozone monitors in Clark County, and one ozone monitor each in Greene, Miami, and Montgomery Counties. OEPA has committed to continue operating the ozone monitors located in these counties. OEPA has also committed to consult with EPA prior to making changes to the existing monitoring network, should changes become necessary in the future. OEPA will continue to quality assure and report monitoring data in accordance with 40 CFR part 58 and all other federal requirements.

e. Verification of Continued Attainment

Continued attainment of the ozone NAAQS in the Dayton-Springfield area depends, in part, on the State's efforts toward tracking indicators of continued attainment during the maintenance period. The State's plan for verifying continued attainment of the 8-hour standard in the Dayton-Springfield area consists of plans to continue ambient ozone monitoring in accordance with the requirements of 40 CFR part 58.

f. Contingency Plan

The contingency plan provisions are designed to promptly correct or prevent a violation of the NAAQS that might occur after redesignation of an area to attainment. Section 175A of the CAA requires that a maintenance plan include such contingency measures as EPA deems necessary to assure that the state will promptly correct a violation of the NAAQS that occurs after redesignation. The maintenance plan should identify the contingency measures to be adopted, a schedule and procedure for adoption and

implementation of the contingency measures, and a time limit for action by the state. The state should also identify specific indicators to be used to determine when the contingency measures need to be adopted and implemented. The maintenance plan must include a requirement that the state will implement all measures with respect to control of the pollutant(s) that were contained in the SIP before redesignation of the area to attainment. See section 175A(d) of the CAA.

As required by section 175A of the CAA, Ohio has adopted a contingency plan for the Dayton-Springfield area to address possible future ozone air quality problems. The contingency plan adopted by Ohio has two levels of response, depending on whether a violation of the 8-hour ozone standard is only threatened (Warning Level Response) or has occurred (Action Level Response).

A Warning Level Response will occur when an annual (1-year) fourth-high monitored daily peak 8-hour ozone concentration of 0.88 ppm is monitored within the maintenance area. A Warning Level Response will consist of a study to determine whether the high ozone value indicates a trend toward higher ozone concentrations and whether emissions appear to be increasing. The study will evaluate whether the trend, if any, is likely to continue. If so, control measures necessary to reverse the trend will be selected by the State for evaluation and possible adoption. Implementation of necessary controls in response to a Warning Level Response triggering will occur as expeditiously as possible, but in no event later than 12 months from the conclusion of the most recent ozone season (September 30).

An Action Level Response will be triggered whenever a two-year average fourth-high monitored value of 0.85 ppm or greater is monitored within the area, or a violation of the NAAQS (three-year average fourth-high value of 0.85 ppm or greater) is monitored within the area. When an Action Level Response is triggered, OEPA, in conjunction with the metropolitan planning organization or regional council of governments, will determine what control measures are needed to assure future attainment of the NAAQS. Measures that can be implemented in a short time will be selected in order to be in place within 18 months from the close of the ozone season that prompted the Action Level.

The State will select contingency measures for consideration from a comprehensive list of measures deemed appropriate and effective at the time the selection is made. In its maintenance plan, OEPA included the following list of possible contingency measures:

i. Lower Reid vapor pressure gasoline program;

ii. Tighten RACT on existing sources covered by U.S. EPA Control Technique Guidelines issued in response to the 1990 CAA;

iii. Apply RACT to smaller existing sources;

iv. Alternative fuel and diesel retrofit programs for fleet vehicle operations;

v. Controls on consumer products consistent with those adopted elsewhere in the United States;

vi. Require VOC or NO_X emission offsets for new and modified major sources;

vii. Require VOC or NO_X emission offsets for new and modified minor sources;

viii. Increase the ratio of emission offsets required for new sources; and

ix. Require VOC or NO_X controls on new minor sources (less than 100 tons).

It should be noted that a lower Reid vapor pressure gasoline program would only be creditable as a contingency measure to the extent that it goes beyond the program currently approved and included in the maintenance plan emissions estimates.

g. Provisions for Future Updates of the Ozone Maintenance Plan

As required by section 175A(b) of the CAA, Ohio commits to submit to the EPA updated ozone maintenance plans eight years after redesignation of the Dayton-Springfield area to cover an additional 10-year period beyond the initial 10-year maintenance period. As required by section 175(A) of the CAA, Ohio has committed to maintaining the existing controls after redesignation unless the State demonstrates that the standard can be maintained without one or more controls. Ohio commits that any changes to its rules or emission limits applicable to VOC and/or NO_X sources, as required for maintenance of the ozone standard in the Dayton-Springfield area will be submitted to EPA for approval as a SIP revision.

EPA has concluded that the maintenance plan adequately addresses the five basic components of a maintenance plan: attainment inventory, maintenance demonstration, monitoring network, verification of continued attainment, and a contingency plan. The maintenance plan SIP revision submitted by Ohio for the Dayton-Springfield area meets the requirements of section 175A of the CAA.

B. Adequacy of Ohio's MVEBs

1. How Are MVEBs Developed and What Are the MVEBs for the Dayton-Springfield Area?

Under the CAA, states are required to submit, at various times, control strategy SIP revisions and ozone maintenance plans for ozone nonattainment areas and for areas seeking redesignations to attainment of the ozone standard. These emission control strategy SIP revisions (e.g., reasonable further progress SIP and attainment demonstration SIP revisions) and ozone maintenance plans create MVEBs based on onroad mobile source emissions for criteria pollutants and/or their precursors to address pollution from cars and trucks. The MVEBs are the portions of the total allowable emissions that are allocated to highway and transit vehicle use that, together with emissions from other sources in the area, will provide for attainment or maintenance.

Under 40 CFR Part 93, a MVEB for an area seeking a redesignation to attainment is established for the last year of the maintenance plan. The MVEB serves as a ceiling on emissions from an area's planned transportation system. The MVEB concept is further explained in the preamble to the November 24, 1993, transportation conformity rule (58 FR 62188). The preamble also describes how to establish the MVEB in the SIP and how to revise the MVEB if needed.

Under section 176(c) of the CAA, new transportation projects, such as the construction of new highways, must ''conform'' to (i.e., be consistent with) the part of the SIP that addresses emissions from cars and trucks. Conformity to the SIP means that transportation activities will not cause new air quality violations, worsen existing air quality violations, or delay timely attainment of the NAAQS. If a transportation plan does not conform, most new transportation projects that would expand the capacity of roadways cannot go forward. Regulations at 40 CFR part 93 set forth EPA policy, criteria, and procedures for demonstrating and assuring conformity of such transportation activities to a SIP.

When reviewing SIP revisions containing MVEBs, including attainment strategies, rate-of-progress plans, and maintenance plans, EPA must affirmatively find that the MVEBs are ''adequate'' for use in determining transportation conformity. Once EPA affirmatively finds the submitted MVEBs to be adequate for transportation conformity purposes, the MVEBs are used by state and federal agencies in determining whether proposed

transportation projects conform to the SIP as required by section 176(c) of the CAA. EPA's substantive criteria for determining the adequacy of MVEBs are set out in 40 CFR 93.118(e)(4).

EPA's process for determining adequacy of a MVEB consists of three basic steps: (1) Providing public notification of a SIP submission; (2) providing the public the opportunity to comment on the MVEB during a public comment period; and, (3) EPA's finding of adequacy. The process of determining the adequacy of submitted SIP MVEBs was initially outlined in EPA's May 14, 1999 guidance, ''Conformity Guidance on Implementation of March 2, 1999, Conformity Court Decision.'' This guidance was codified in the Transportation Conformity Rule Amendments for the ''New 8–Hour Ozone and $PM_{2.5}$ National Ambient Air Quality Standards and Miscellaneous Revisions for Existing Areas; Transportation Conformity Rule Amendments—Response to Court Decision and Additional Rule Change,'' published on July 1, 2004 (69 FR 40004). EPA follows this guidance and rulemaking in making its adequacy determinations.

The Dayton-Springfield area's maintenance plan contains new VOC and NO_X MVEBs for the years 2005 and 2018. The availability of the SIP submission with these 2005 and 2018 MVEBs was announced for public comment on EPA's Adequacy Web page on November 14, 2006 at: *http://www.epa.gov/otaq/stateresources/transconf/currsips.htm*. The EPA public comment period on adequacy of the 2005 and 2018 MVEBs for the Dayton-Springfield area closed on December 14, 2006. No requests for this submittal or adverse comments on the submittal were received during the adequacy comment period. In a letter dated February 9, 2007, EPA informed OEPA that we had found the 2005 and 2018 MVEBs to be adequate for use in transportation conformity analyses. EPA published a **Federal Register** notice announcing the adequacy of the 2005 and 2018 MVEBs on April 3, 2007 (72 FR 15879).

EPA, through this rulemaking, is proposing to approve the MVEBs for use to determine transportation conformity in the Dayton-Springfield area because EPA has determined that the area can maintain attainment of the 8-hour ozone NAAQS for the relevant maintenance period with mobile source emissions at the levels of the MVEBs. OEPA has determined the 2005 MVEBs for the Dayton-Springfield area to be 29.19 tpd for VOC and 63.88 tpd for NO_X. OEPA has determined the 2018 MVEBs for the area to be 14.73 tpd for VOC and 21.42 tpd for NO_X. These MVEBs exceed the onroad mobile source VOC and NO_X emissions projected by MDEQ for 2018, as summarized in Table 6 above (''onroad'' source sector). OEPA decided to include safety margins (described further below) of 3.07 tpd for VOC and 2.92 tpd for NO_X in the MVEBs to provide for mobile source growth. Ohio has demonstrated that the Dayton-Springfield area can maintain the 8-hour ozone NAAQS with mobile source emissions of 14.73 tpd of VOC and 21.42 tpd of NO_X in 2018, including the allocated safety margins, since emissions will still remain under attainment year emission levels.

2. What Is a Safety Margin?

A ''safety margin'' is the difference between the attainment level of emissions (from all sources) and the projected level of emissions (from all sources) in the maintenance plan. As noted in Table 6, the Dayton-Springfield area VOC and NO_X emissions are projected to have safety margins of 14.99 tpd for VOC and 53.64 tpd for NO_X in 2018 (the difference between the attainment year, 2005, emissions and the projected 2018 emissions for all sources in the Dayton-Springfield area). Even if emissions reached the full level of the safety margin, the area would still demonstrate maintenance since emission levels would equal those in the attainment year.

The MVEBs requested by OEPA contain safety margins for mobile sources smaller than the allowable safety margins reflected in the total emissions for Dayton-Springfield area. The State is not requesting allocation of the entire available safety margins reflected in the demonstration of maintenance. Therefore, even though the State is requesting MVEBs that exceed the projected onroad mobile source emissions for 2018 contained in the demonstration of maintenance, the increase in onroad mobile source emissions that can be considered for transportation conformity purposes is well within the safety margins of the ozone maintenance demonstration. Further, once allocated to mobile sources, these safety margins will not be available for use by other sources.

VIII. What Actions Is EPA Taking?

EPA is proposing to make a determination that the Dayton-Springfield area has attained the 8-hour ozone NAAQS. EPA is also proposing to approve the maintenance plan SIP revision for the Dayton-Springfield area. EPA's proposed approval of the maintenance plan is based on Ohio's demonstration that the plan meets the requirements of section 175A of the CAA, as described more fully above. After evaluating Ohio's redesignation request, EPA has determined that it meets the redesignation criteria set forth in section 107(d)(3)(E) of the CAA. Therefore, EPA is proposing to approve the redesignation of the Dayton-Springfield area from nonattainment to attainment for the 8-hour ozone NAAQS. The final approval of this redesignation request would change the official designation for the Dayton-Springfield area from nonattainment to attainment for the 8-hour ozone standard. Finally, EPA is proposing to approve the 2005 and 2018 MVEBs submitted by Ohio in conjunction with the redesignation request.

IX. Statutory and Executive Order Reviews

Executive Order 12866: Regulatory Planning and Review

Under Executive Order 12866 (58 FR 51735, September 30, 1993), this action is not a ''significant regulatory action'' and, therefore, is not subject to review by the Office of Management and Budget.

Paperwork Reduction Act

This proposed rule does not impose an information collection burden under the provisions of the Paperwork Reduction Act of 1995 (44 U.S.C. 3501 *et seq.*).

Regulatory Flexibility Act

This proposed action merely proposes to approve state law as meeting federal requirements and imposes no additional requirements beyond those imposed by state law. Redesignation of an area to attainment under section 107(d)(3)(E) of the CAA does not impose any new requirements on small entities. Redesignation is an action that affects the status of a geographical area and does not impose any new regulatory requirements on sources. Accordingly, the Administrator certifies that this rule will not have a significant economic impact on a substantial number of small entities under the Regulatory Flexibility Act (5 U.S.C. 601 *et seq.*).

Unfunded Mandates Reform Act

Because this rule proposes to approve pre-existing requirements under state law, and does not impose any additional enforceable duty beyond that required by state law, it does not contain any unfunded mandate or significantly or uniquely affect small governments, as described in the Unfunded Mandates Reform Act of 1995 (Pub. L. 104–4).

Executive Order 13132: Federalism

This action also does not have Federalism implications because it does not have substantial direct effects on the states, on the relationship between the national government and the states, or on the distribution of power and responsibilities among the various levels of government, as specified in Executive Order 13132 (64 FR 43255, August 10, 1999). Redesignation is an action that merely affects the status of a geographical area, does not impose any new requirements on sources, or allows a state to avoid adopting or implementing other requirements, and does not alter the relationship or the distribution of power and responsibilities established in the CAA.

Executive Order 13175: Consultation and Coordination With Indian Tribal Governments

This proposed rule also does not have tribal implications because it will not have a substantial direct effect on one or more Indian tribes, on the relationship between the Federal Government and Indian tribes, or on the distribution of power and responsibilities between the Federal Government and Indian tribes, as specified by Executive Order 13175 (65 FR 67249, November 9, 2000).

Executive Order 13045: Protection of Children From Environmental Health and Safety Risks

This proposed rule also is not subject to Executive Order 13045 ''Protection of Children from Environmental Health Risks and Safety Risks'' (62 FR 19885, April 23, 1997), because it is not economically significant.

Executive Order 13211: Actions That Significantly Affect Energy Supply, Distribution, or Use

Because it is not a ''significant regulatory action'' under Executive Order 12866 or a ''significant energy action,'' this action is also not subject to Executive Order 13211, ''Actions Concerning Regulations That Significantly Affect Energy Supply, Distribution, or Use'' (66 FR 28355, May 22, 2001).

National Technology Transfer Advancement Act

Section 12(d) of the National Technology Transfer and Advancement Act of 1995 (NTTA), 15 U.S.C. 272, requires federal agencies to use technical standards that are developed or adopted by voluntary consensus to carry out policy objectives, so long as such standards are not inconsistent with applicable law or otherwise impracticable. In reviewing program submissions, EPA's role is to approve state choices, provided that they meet the criteria of the CAA. Absent a prior existing requirement for the state to use voluntary consensus standards, EPA has no authority to disapprove a program submission for failure to use such standards, and it would thus be inconsistent with applicable law for EPA to use voluntary consensus standards in place of a program submission that otherwise satisfies the provisions of the Act. Redesignation is an action that affects the status of a geographical area but does not impose any new requirements on sources. Thus, the requirements of section 12(d) of the National Technology Transfer and Advancement Act of 1995 (15 U.S.C. 272 note) do not apply.

List of Subjects

40 CFR Part 52

Environmental protection, Air pollution control, Intergovernmental relations, Nitrogen dioxide, Ozone, Volatile organic compounds.

40 CFR Part 81

Environmental protection, Air pollution control, National parks, Wilderness areas.

Dated: June 12, 2007.

Bharat Mathur,

Acting Regional Administrator, Region 5.

[FR Doc. E7–11958 Filed 6–19–07; 8:45 am]

BILLING CODE 6560–50–P

FEDERAL COMMUNICATIONS COMMISSION

47 CFR Parts 9 and 20

[PS Docket No. 07–114; WC Docket No. 05–196; FCC 07–108]

Wireless E911 Location Accuracy Requirements; E911 Requirements for IP-Enabled Service Providers

AGENCY: Federal Communications Commission.

ACTION: Notice of proposed rulemaking.

SUMMARY: In this document the FCC seeks comment on several issues relating to Enhanced 911 (E911) location accuracy and reliability requirements, in order to ensure that E911 service meets the needs of public safety and the American people, while taking into account the evolution in the use of wireless devices and the further development of location technologies.

DATES: Written comments on the geographic scope of the current wireless location accuracy requirements and the question of deferring enforcement of § 20.18(h) at the PSAP service area level are due on or before July 5, 2007 and reply comments are due on or before July 11, 2007. Written comments on all other questions raised in the NPRM are due on or before August 20, 2007 and reply comments are due on or before September 18, 2007.

ADDRESSES: You may submit comments, identified by PS Docket No. 07–114 and WC Docket No. 05–196, by any of the identified methods:

- *Federal eRulemaking Portal: http://www.regulations.gov.* Follow the instructions for submitting comments.
- *Federal Communications Commission's Web Site: http://www.fcc.gov/cgb/ecfs/.* Follow the instructions for submitting comments.
- *Mail:* Follow the instructions for paper filers below.
- *People with Disabilities:* Contact the FCC to request reasonable accommodations (accessible format documents, sign language interpreters, CART, etc.) by e-mail: *FCC504@fcc.gov* or phone 202–418–0530 or TTY: 202–418–0432.

For detailed instructions for submitting comments and additional information on the rulemaking process, see the **SUPPLEMENTARY INFORMATION** section of this document.

FOR FURTHER INFORMATION CONTACT: Carol Simpson, Policy Division, Public Safety and Homeland Security Bureau, (202) 418–2391, or TTY (202) 418–7233.

SUPPLEMENTARY INFORMATION: This is a summary of the Federal Communications Commission's *Notice of Proposed Rulemaking* (NPRM) in PS Docket No. 07–114 and WC Docket No. 05–196, FCC 07–108, adopted on May 31, 2007, and released on June 1, 2007. In section III.A of the NPRM, the FCC seeks comment on its tentative conclusion to adopt a proposal by the Association of Public-Safety Communications Officials-International, Inc. (APCO) to clarify § 20.18(h) of the Commission's rules, which specifies the standards for wireless E911 Phase II location accuracy and reliability, to require licensees subject to this rule to satisfy these standards at a geographical level defined by the coverage area of each respective local Public Safety Answering Point (PSAP). We also grant APCO's request for an expedited consideration of its proposal, and seek comment on whether, if we adopt this tentative conclusion, we should defer enforcement of § 20.18(h) to allow wireless carriers to come into compliance.

In section III.B, of the NPRM, the FCC seeks comment on a number of other tentative conclusions and proposals,

including: (i) If we were to require licensees to meet the standards of § 20.18(h) at the PSAP level, and decide to defer enforcement of § 20.18(h) as so defined, how long we should defer enforcement; (ii) the tentative conclusion to establish a single location accuracy requirement irrespective of technology; (iii) how advances in location technologies and the use of hybrid technologies that employ both handset and network-based technologies should impact our analysis; (iv) whether a more stringent accuracy requirement should be adopted; (v) how and by what date to require compliance with a uniform and/or new accuracy requirement; (vi) the methodology for accuracy compliance testing, particularly when wireless phones are used indoors and in rural areas; (vii) the tentative conclusions to establish a mandatory schedule for accuracy testing and to require carriers to automatically provide accuracy data to PSAPs; (viii) whether to require carriers to provide E911 location information when a wireless phone roams to an area that uses a different location technology or in which there are no automatic roaming agreements between carriers; and (ix) the tentative conclusion that to the extent that an interconnected voice over Internet Protocol (VoIP) service may be used in more than one location, service providers must employ an automatic location technology that meets the same accuracy standards that apply to services provided by circuit-switched commercial mobile radio services (CMRS) carriers.

I. Procedural Matters

A. Ex Parte Rules—Permit-But-Disclose Proceeding

1. This proceeding shall be treated as a ''permit-but-disclose'' proceeding in accordance with the Commission's *ex parte* rules. Persons making oral *ex parte* presentations are reminded that memoranda summarizing the presentations must contain summaries of the substance of the presentations and not merely a listing of the subjects discussed. More than a one- or two-sentence description of the views and arguments presented is generally required. Other rules pertaining to oral and written presentations are set forth in § 1.1206(b) of the Commission's rules as well.

B. Comment Dates

2. Pursuant to §§ 1.415 and 1.419 of the Commission's rules, 47 CFR 1.415, 1.419, interested parties may file comments and reply comments on or before the dates indicated on the first page of this document. Comments may be filed using (1) the FCC's Electronic Comment Filing System (ECFS), (2) the Federal Government's eRulemaking Portal, or (3) by filing paper copies. *See* Electronic Filing of Documents in Rulemaking Proceedings, 63 FR 24,121 (1998).

3. Electronic Filers: Comments may be filed electronically using the Internet by accessing the ECFS: *http://www.fcc.gov/cgb/ecfs* or the Federal eRulemaking Portal: *http://www.regulations.gov.* Filers should follow the instructions provided on the Web site for submitting comments.

4. For ECFS filers, if multiple dockets or rulemaking numbers appear in the caption of this proceeding, filers must transmit one electronic copy of the comments for each docket or rulemaking number referenced in the caption. In completing the transmittal screen, filers should include their full name, U.S. Postal Service mailing address, and the applicable docket or rulemaking number. Parties may also submit an electronic comment by Internet e-mail. To get filing instructions, filers should send and e-mail to *ecfs@fcc.gov*, and include the following words in the body of the message, ''get form.'' A sample form and directions will be sent in response.

5. Paper Filers: Parties who choose to file by paper must file an original and four copies of each filing. If more than one docket or rulemaking number appears in the caption of this proceeding, filers must submit two additional copies for each additional docket or rulemaking number.

6. Filings can be sent by hand or messenger delivery, by commercial overnight courier, or by first-class or overnight U.S. Postal Service mail (although we continue to experience delays in receiving U.S. Postal Service mail). All filings must be addressed to the Commission's Secretary, Office of the Secretary, Federal Communications Commission.

7. The Commission's contractor will receive hand-delivered or messenger-delivered paper filings for the Commission's Secretary at 236 Massachusetts Avenue, NE., Suite 110, Washington, DC 20002. The filing hours at this location are 8 a.m. to 7 p.m. All hand deliveries must be held together with rubber bands or fasteners. Any envelopes must be disposed of before entering the building.

8. Commercial overnight mail (other than U.S. Postal Service Express Mail and Priority Mail) must be sent to 9300 East Hampton Drive, Capitol Heights, MD 20743.

9. U.S. Postal Service first-class, Express, and Priority mail must be addressed to 445 12th Street, SW., Washington, DC 20554.

10. Comments and reply comments and any other filed documents in this matter may be obtained from Best Copy and Printing, Inc., in person at 445 12th Street, SW., Room CY–B402, Washington, DC 20554, via telephone at (202) 488–5300, via facsimile at (202) 488–5563, or via e-mail at *FCC@BCPIWEB.COM.* The pleadings will be also available for public inspection and copying during regular business hours in the FCC Reference Information Center, Room CY–A257, 445 12th Street, SW., Washington, DC 20554, and through the Commission's Electronic Filing System (ECFS) accessible on the Commission's Web site, *http://www.fcc.gov/cgb/ecfs.*

11. To request materials in accessible formats for people with disabilities (braille, large print, electronic files, audio format), send an e-mail to *fcc504@fcc.gov* or call the Consumer & Governmental Affairs Bureau at 202–418–0530 (voice), 202–418–0432 (TTY).

12. Commenters who file information that they believe is should be withheld from public inspection may request confidential treatment pursuant to § 0.459 of the Commission's rules. Commenters should file both their original comments for which they request confidentiality and redacted comments, along with their request for confidential treatment. Commenters should not file proprietary information electronically. Even if the Commission grants confidential treatment, information that does not fall within a specific exemption pursuant to the Freedom of Information Act (FOIA) must be publicly disclosed pursuant to an appropriate request. *See* 47 CFR 0.461; 5 U.S.C. 552. We note that the Commission may grant requests for confidential treatment either conditionally or unconditionally. As such, we note that the Commission has the discretion to release information on public interest grounds that does fall within the scope of a FOIA exemption.

C. Paperwork Reduction Act

13. This document does not contain proposed information collection(s) subject to the Paperwork Reduction Act of 1995 (PRA), Public Law 104–13. In addition, therefore, it does not contain any new or modified ''information collection burden for small business concerns with fewer than 25 employees,'' pursuant to the Small Business Paperwork Relief Act of 2002, Public Law 107–198, *see* 44 U.S.C. 3506(c)(4).

II. Initial Regulatory Flexibility Analysis

14. As required by the Regulatory Flexibility Act of 1980, as amended (RFA), the Commission has prepared this present Initial Regulatory Flexibility Analysis (IRFA) of the possible significant economic impact on a substantial number of small entities by the policies and rules proposed in this NPRM. Written public comments are requested on this IRFA. Comments must be identified as responses to the IRFA and must be filed by the deadlines for comments on the first page of the Notice. The Commission will send a copy of the Notice, including this IRFA, to the Chief Counsel for Advocacy of the Small Business Administration (SBA). In addition, the Notice and IRFA (or summaries thereof) will be published in the **Federal Register**.

Need for, and Objectives of, the Proposed Rules

15. In the Notice, we seek comment on how to best ensure that public safety answering points (PSAPs) receive location information that is as accurate as possible for all wireless E911 calls. The Notice also asks whether and to what extent providers of interconnected voice over Internet Protocol (VoIP) services should be required to provide automatic location identification (ALI), and whether they should be subject to the same location accuracy requirements as providers of circuit-switched commercial mobile radio services (CMRS). The objective is to ensure that PSAPs receive reliable and accurate location information irrespective of the location of the caller or the technology that may be used.

16. The Notice tentatively concludes that wireless carriers must comply with § 20.18(h) of the Commission's rules, which sets forth the standards for Phase II wireless E911 location accuracy and reliability, at the PSAP service area level. This tentative conclusion responds to a petition for declaratory ruling filed by the Association of Public-Safety Communications Officials-International, Inc. (APCO) expressing concern that by measuring and testing location accuracy over geographic areas larger than PSAP service areas, a wireless carrier can assert that it satisfies the requirements of § 20.18(h) even when it is not meeting the location accuracy requirements in substantial segments of its service area. In recognition of the fact that many carriers are not currently measuring and testing location accuracy at the PSAP level, the Notice seeks comment on whether—and for what length of time—the Commission should defer enforcement of § 20.18(h) if it adopts the tentative conclusion to require compliance at the PSAP level.

17. The Notice explores other possible ways to improve wireless E911 location accuracy and reliability. The item tentatively concludes that the public interest would be better served by a single, technology-neutral location accuracy requirement for wireless E911 service, rather than the separate accuracy requirements for network-based and handset-based location technologies that are currently in place. In light of this tentative conclusion, the Notice seeks comment on what an appropriate uniform accuracy standard would be, what level of accuracy is possible with current location technologies, whether hybrid solutions that employ both network-based and handset-based location technologies can produce improved location accuracy, and how long carriers should be given to come into compliance if the Commission adopts a new, uniform location accuracy standard.

18. The Notice tentatively concludes that the Commission will establish a mandatory schedule for accuracy testing, and that carriers should automatically provide accuracy data to PSAPs. The Notice seeks comment on these tentative conclusions, and also seeks comment on whether the Commission should require wireless carriers to deliver location information for ''roaming'' 911 calls placed by another carrier's customers.

19. With respect to interconnected VoIP, the Notice seeks comment on whether and to what extent providers of interconnected VoIP services should be required to provide automatic location identification, or ALI, and whether they should be subject to the same location accuracy requirements as providers of circuit-switched CMRS. The Notice tentatively concludes that to the extent that an interconnected VoIP service may be used in more than one location, providers must employ an automatic location technology that meets the same accuracy standards that apply to CMRS carriers.

Legal Basis

20. The legal basis for any action that may be taken pursuant to this Notice is contained in sections 4(i) and 332 of the Communications Act of 1934, as amended, 47 U.S.C. 154(i), 332.

Description and Estimate of the Number of Small Entities to Which the Proposed Rules Will Apply

21. The RFA directs agencies to provide a description of and, where feasible, an estimate of the number of small entities that may be affected by the proposed rules. The RFA generally defines the term ''small entity'' as having the same meaning as the terms ''small business,'' ''small organization,'' and ''small governmental jurisdiction.'' In addition, the term ''small business'' has the same meaning as the term ''small business concern'' under the Small Business Act. A small business concern is one which: (1) Is independently owned and operated; (2) is not dominant in its field of operation; and (3) satisfies any additional criteria established by the Small Business Administration (SBA).

Telecommunications Service Entities, Wireless Telecommunications Service Providers

22. Below, for those services subject to auctions, we note that, as a general matter, the number of winning bidders that qualify as small businesses at the close of an auction does not necessarily represent the number of small businesses currently in service. Also, the Commission does not generally track subsequent business size unless, in the context of assignments or transfers, unjust enrichment issues are implicated.

23. *Cellular Licensees.* The SBA has developed a small business size standard for wireless firms within the broad economic census category ''Cellular and Other Wireless Telecommunications.'' Under this SBA category, a wireless business is small if it has 1,500 or fewer employees. For the census category of Cellular and Other Wireless Telecommunications, Census Bureau data for 2002 show that there were 1,397 firms in this category that operated for the entire year. Of this total, 1,378 firms had employment of 999 or fewer employees, and 19 firms had employment of 1,000 employees or more. Thus, under this category and size standard, the great majority of firms can be considered small. Also, according to Commission data, 437 carriers reported that they were engaged in the provision of cellular service, Personal Communications Service (PCS), or Specialized Mobile Radio (SMR) Telephony services, which are placed together in the data. We have estimated that 260 of these are small, under the SBA small business size standard.

24. *Common Carrier Paging.* The SBA has developed a small business size standard for wireless firms within the broad economic census category, ''Cellular and Other Wireless Telecommunications.'' Under this SBA category, a wireless business is small if it has 1,500 or fewer employees. For the census category of Paging, Census

Bureau data for 2002 show that there were 807 firms in this category that operated for the entire year. Of this total, 804 firms had employment of 999 or fewer employees, and three firms had employment of 1,000 employees or more. Thus, under this category and associated small business size standard, the majority of firms can be considered small. In the Paging *Third Report and Order,* we developed a small business size standard for ''small businesses'' and ''very small businesses'' for purposes of determining their eligibility for special provisions such as bidding credits and installment payments. A ''small business'' is an entity that, together with its affiliates and controlling principals, has average gross revenues not exceeding $15 million for the preceding three years. Additionally, a ''very small business'' is an entity that, together with its affiliates and controlling principals, has average gross revenues that are not more than $3 million for the preceding three years. The SBA has approved these small business size standards. An auction of Metropolitan Economic Area licenses commenced on February 24, 2000, and closed on March 2, 2000. Of the 985 licenses auctioned, 440 were sold. Fifty-seven companies claiming small business status won. Also, according to Commission data, 375 carriers reported that they were engaged in the provision of paging and messaging services. Of those, we estimate that 370 are small, under the SBA-approved small business size standard.

25. *Wireless Telephony.* Wireless telephony includes cellular, personal communications services (PCS), and specialized mobile radio (SMR) telephony carriers. As noted earlier, the SBA has developed a small business size standard for ''Cellular and Other Wireless Telecommunications'' services. Under that SBA small business size standard, a business is small if it has 1,500 or fewer employees. According to Commission data, 445 carriers reported that they were engaged in the provision of wireless telephony. We have estimated that 245 of these are small under the SBA small business size standard.

26. *Broadband Personal Communications Service.* The broadband Personal Communications Service (PCS) spectrum is divided into six frequency blocks designated A through F, and the Commission has held auctions for each block. The Commission defined ''small entity'' for Blocks C and F as an entity that has average gross revenues of $40 million or less in the three previous calendar years. For Block F, an additional classification for ''very small business'' was added and is defined as an entity that, together with its affiliates, has average gross revenues of not more than $15 million for the preceding three calendar years. These standards defining ''small entity'' in the context of broadband PCS auctions have been approved by the SBA. No small businesses, within the SBA-approved small business size standards bid successfully for licenses in Blocks A and B. There were 90 winning bidders that qualified as small entities in the Block C auctions. A total of 93 small and very small business bidders won approximately 40 percent of the 1,479 licenses for Blocks D, E, and F. On March 23, 1999, the Commission re-auctioned 347 C, D, E, and F Block licenses. There were 48 small business winning bidders. On January 26, 2001, the Commission completed the auction of 422 C and F Broadband PCS licenses in Auction No. 35. Of the 35 winning bidders in this auction, 29 qualified as ''small'' or ''very small'' businesses. Subsequent events, concerning Auction 35, including judicial and agency determinations, resulted in a total of 163 C and F Block licenses being available for grant.

27. *Narrowband Personal Communications Services.* To date, two auctions of narrowband personal communications services (PCS) licenses have been conducted. For purposes of the two auctions that have already been held, ''small businesses'' were entities with average gross revenues for the prior three calendar years of $40 million or less. Through these auctions, the Commission has awarded a total of 41 licenses, out of which 11 were obtained by small businesses. To ensure meaningful participation of small business entities in future auctions, the Commission has adopted a two-tiered small business size standard in the *Narrowband PCS Second Report and Order.* A ''small business'' is an entity that, together with affiliates and controlling interests, has average gross revenues for the three preceding years of not more than $40 million. A ''very small business'' is an entity that, together with affiliates and controlling interests, has average gross revenues for the three preceding years of not more than $15 million. The SBA has approved these small business size standards. In the future, the Commission will auction 459 licenses to serve Metropolitan Trading Areas (MTAs) and 408 response channel licenses. There is also one megahertz of narrowband PCS spectrum that has been held in reserve and that the Commission has not yet decided to release for licensing. The Commission cannot predict accurately the number of licenses that will be awarded to small entities in future auctions. However, four of the 16 winning bidders in the two previous narrowband PCS auctions were small businesses, as that term was defined. The Commission assumes, for purposes of this analysis that a large portion of the remaining narrowband PCS licenses will be awarded to small entities. The Commission also assumes that at least some small businesses will acquire narrowband PCS licenses by means of the Commission's partitioning and disaggregation rules.

28. *Rural Radiotelephone Service.* The Commission has not adopted a size standard for small businesses specific to the Rural Radiotelephone Service. A significant subset of the Rural Radiotelephone Service is the Basic Exchange Telephone Radio System (BETRS). The Commission uses the SBA's small business size standard applicable to ''Cellular and Other Wireless Telecommunications,'' *i.e.*, an entity employing no more than 1,500 persons. There are approximately 1,000 licensees in the Rural Radiotelephone Service, and the Commission estimates that there are 1,000 or fewer small entity licensees in the Rural Radiotelephone Service that may be affected by the rules and policies adopted herein.

29. *Air-Ground Radiotelephone Service.* The Commission has not adopted a small business size standard specific to the Air-Ground Radiotelephone Service. We will use SBA's small business size standard applicable to ''Cellular and Other Wireless Telecommunications,'' i.e., an entity employing no more than 1,500 persons. There are approximately 100 licensees in the Air-Ground Radiotelephone Service, and we estimate that almost all of them qualify as small under the SBA small business size standard.

30. *Offshore Radiotelephone Service.* This service operates on several UHF television broadcast channels that are not used for television broadcasting in the coastal areas of states bordering the Gulf of Mexico. There are presently approximately 55 licensees in this service. We are unable to estimate at this time the number of licensees that would qualify as small under the SBA's small business size standard for ''Cellular and Other Wireless Telecommunications'' services. Under that SBA small business size standard, a business is small if it has 1,500 or fewer employees.

Wireline Carriers and Service Providers

31. The SBA has developed a small business size standard for wireline firms within the broad economic census category, ''Wired Telecommunications Carriers.'' Under this category, the SBA deems a wireline business to be small if it has 1,500 or fewer employees. Census Bureau data for 2002 show that there were 2,432 firms in this category that operated for the entire year. Of this total, 2,395 firms had employment of 999 or fewer employees, and 37 firms had employment of 1,000 employees or more. Thus, under this category and associated small business size standard, the majority of firms can be considered small.

32. We have included small incumbent local exchange carriers in this present RFA analysis. As noted above, a ''small business'' under the RFA is one that, *inter alia,* meets the pertinent small business size standard (*e.g.*, a telephone communications business having 1,500 or fewer employees), and ''is not dominant in its field of operation.'' The SBA's Office of Advocacy contends that, for RFA purposes, small incumbent local exchange carriers are not dominant in their field of operation because any such dominance is not ''national'' in scope. We have therefore included small incumbent local exchange carriers in this RFA analysis, although we emphasize that this RFA action has no effect on Commission analyses and determinations in other, non-RFA contexts.

33. *Incumbent Local Exchange Carriers (LECs).* Neither the Commission nor the SBA has developed a small business size standard specifically for incumbent local exchange services. The appropriate size standard under SBA rules is for the category Wired Telecommunications Carriers. Under that size standard, such a business is small if it has 1,500 or fewer employees. According to Commission data, 1,303 carriers have reported that they are engaged in the provision of incumbent local exchange services. Of these 1,303 carriers, an estimated 1,020 have 1,500 or fewer employees and 283 have more than 1,500 employees. Consequently, the Commission estimates that most providers of incumbent local exchange service are small businesses that may be affected by our action.

34. *Competitive Local Exchange Carriers, Competitive Access Providers (CAPs), Shared-Tenant Service Providers, and Other Local Service Providers.* Neither the Commission nor the SBA has developed a small business size standard specifically for these service providers. The appropriate size standard under SBA rules is for the category Wired Telecommunications Carriers. Under that size standard, such a business is small if it has 1,500 or fewer employees. According to Commission data, 769 carriers have reported that they are engaged in the provision of either competitive access provider services or competitive local exchange carrier services. Of these 769 carriers, an estimated 676 have 1,500 or fewer employees and 93 have more than 1,500 employees.

In addition, 12 carriers have reported that they are ''Shared-Tenant Service Providers,'' and all 12 are estimated to have 1,500 or fewer employees. In addition, 39 carriers have reported that they are ''Other Local Service Providers.'' Of the 39, an estimated 38 have 1,500 or fewer employees and one has more than 1,500 employees. Consequently, the Commission estimates that most providers of competitive local exchange service, competitive access providers, ''Shared-Tenant Service Providers,'' and ''Other Local Service Providers'' are small entities that may be affected by our action.

35. *Local Resellers.* The SBA has developed a small business size standard for the category of Telecommunications Resellers. Under that size standard, such a business is small if it has 1,500 or fewer employees. According to Commission data, 143 carriers have reported that they are engaged in the provision of local resale services. Of these, an estimated 141 have 1,500 or fewer employees and two have more than 1,500 employees. Consequently, the Commission estimates that the majority of local resellers are small entities that may be affected by our action.

36. *Toll Resellers.* The SBA has developed a small business size standard for the category of Telecommunications Resellers. Under that size standard, such a business is small if it has 1,500 or fewer employees. According to Commission data, 770 carriers have reported that they are engaged in the provision of toll resale services. Of these, an estimated 747 have 1,500 or fewer employees and 23 have more than 1,500 employees. Consequently, the Commission estimates that the majority of toll resellers are small entities that may be affected by our action.

37. *Payphone Service Providers (PSPs).* Neither the Commission nor the SBA has developed a small business size standard specifically for payphone services providers. The appropriate size standard under SBA rules is for the category Wired Telecommunications Carriers. Under that size standard, such a business is small if it has 1,500 or fewer employees. According to Commission data, 613 carriers have reported that they are engaged in the provision of payphone services. Of these, an estimated 609 have 1,500 or fewer employees and four have more than 1,500 employees. Consequently, the Commission estimates that the majority of payphone service providers are small entities that may be affected by our action.

38. *Interexchange Carriers (IXCs).* Neither the Commission nor the SBA has developed a small business size standard specifically for providers of interexchange services. The appropriate size standard under SBA rules is for the category Wired Telecommunications Carriers. Under that size standard, such a business is small if it has 1,500 or fewer employees. According to Commission data, 316 carriers have reported that they are engaged in the provision of interexchange service. Of these, an estimated 292 have 1,500 or fewer employees and 24 have more than 1,500 employees. Consequently, the Commission estimates that the majority of IXCs are small entities that may be affected by our action.

39. *Operator Service Providers (OSPs).* Neither the Commission nor the SBA has developed a small business size standard specifically for operator service providers. The appropriate size standard under SBA rules is for the category Wired Telecommunications Carriers. Under that size standard, such a business is small if it has 1,500 or fewer employees. According to Commission data, 23 carriers have reported that they are engaged in the provision of operator services. Of these, an estimated 20 have 1,500 or fewer employees and three have more than 1,500 employees. Consequently, the Commission estimates that the majority of OSPs are small entities that may be affected by our action.

40. *Prepaid Calling Card Providers.* Neither the Commission nor the SBA has developed a small business size standard specifically for prepaid calling card providers. The appropriate size standard under SBA rules is for the category Telecommunications Resellers. Under that size standard, such a business is small if it has 1,500 or fewer employees. According to Commission data, 89 carriers have reported that they are engaged in the provision of prepaid calling cards. Of these, 88 are estimated to have 1,500 or fewer employees and one has more than 1,500 employees. Consequently, the Commission estimates that all or the majority of

prepaid calling card providers are small entities that may be affected by our action.

41. *800 and 800-Like Service Subscribers.* Neither the Commission nor the SBA has developed a small business size standard specifically for 800 and 800-like service (''toll free'') subscribers. The appropriate size standard under SBA rules is for the category Telecommunications Resellers. Under that size standard, such a business is small if it has 1,500 or fewer employees. The most reliable source of information regarding the number of these service subscribers appears to be data the Commission collects on the 800, 888, and 877 numbers in use. According to our data, at the end of January, 1999, the number of 800 numbers assigned was 7,692,955; the number of 888 numbers assigned was 7,706,393; and the number of 877 numbers assigned was 1,946,538. We do not have data specifying the number of these subscribers that are not independently owned and operated or have more than 1,500 employees, and thus are unable at this time to estimate with greater precision the number of toll free subscribers that would qualify as small businesses under the SBA size standard. Consequently, we estimate that there are 7,692,955 or fewer small entity 800 subscribers; 7,706,393 or fewer small entity 888 subscribers; and 1,946,538 or fewer small entity 877 subscribers.

International Service Providers

42. The Commission has not developed a small business size standard specifically for providers of international service. The appropriate size standards under SBA rules are for the two broad census categories of ''Satellite Telecommunications'' and ''Other Telecommunications.'' Under both categories, such a business is small if it has $13.5 million or less in average annual receipts.

43. The first category of Satellite Telecommunications ''comprises establishments primarily engaged in providing point-to-point telecommunications services to other establishments in the telecommunications and broadcasting industries by forwarding and receiving communications signals via a system of satellites or reselling satellite telecommunications.'' For this category, Census Bureau data for 2002 show that there were a total of 371 firms that operated for the entire year. Of this total, 307 firms had annual receipts of under $10 million, and 26 firms had receipts of $10 million to $24,999,999. Consequently, we estimate that the majority of Satellite Telecommunications firms are small entities that might be affected by our action.

44. The second category of Other Telecommunications ''comprises establishments primarily engaged in (1) providing specialized telecommunications applications, such as satellite tracking, communications telemetry, and radar station operations; or (2) providing satellite terminal stations and associated facilities operationally connected with one or more terrestrial communications systems and capable of transmitting telecommunications to or receiving telecommunications from satellite systems.'' For this category, Census Bureau data for 2002 show that there were a total of 332 firms that operated for the entire year. Of this total, 303 firms had annual receipts of under $10 million and 15 firms had annual receipts of $10 million to $24,999,999. Consequently, we estimate that the majority of Other Telecommunications firms are small entities that might be affected by our action.

Cable and OVS Operators

45. *Cable and Other Program Distribution.* The Census Bureau defines this category as follows: ''This industry comprises establishments primarily engaged as third-party distribution systems for broadcast programming. The establishments of this industry deliver visual, aural, or textual programming received from cable networks, local television stations, or radio networks to consumers via cable or direct-to-home satellite systems on a subscription or fee basis. These establishments do not generally originate programming material.'' The SBA has developed a small business size standard for Cable and Other Program Distribution, which is: all such firms having $13.5 million or less in annual receipts. According to Census Bureau data for 2002, there were a total of 1,191 firms in this category that operated for the entire year. Of this total, 1,087 firms had annual receipts of under $10 million, and 43 firms had receipts of $10 million or more but less than $25 million. Thus, under this size standard, the majority of firms can be considered small.

46. *Cable Companies and Systems.* The Commission has also developed its own small business size standards, for the purpose of cable rate regulation. Under the Commission's rules, a ''small cable company'' is one serving 400,000 or fewer subscribers, nationwide. Industry data indicate that, of 1,076 cable operators nationwide, all but eleven are small under this size standard. In addition, under the Commission's rules, a ''small system'' is a cable system serving 15,000 or fewer subscribers. Industry data indicate that, of 7,208 systems nationwide, 6,139 systems have under 10,000 subscribers, and an additional 379 systems have 10,000–19,999 subscribers. Thus, under this second size standard, most cable systems are small.

47. *Cable System Operators.* The Communications Act of 1934, as amended, also contains a size standard for small cable system operators, which is ''a cable operator that, directly or through an affiliate, serves in the aggregate fewer than 1 percent of all subscribers in the United States and is not affiliated with any entity or entities whose gross annual revenues in the aggregate exceed $250,000,000.'' The Commission has determined that an operator serving fewer than 677,000 subscribers shall be deemed a small operator, if its annual revenues, when combined with the total annual revenues of all its affiliates, do not exceed $250 million in the aggregate. Industry data indicate that, of 1,076 cable operators nationwide, all but ten are small under this size standard. We note that the Commission neither requests nor collects information on whether cable system operators are affiliated with entities whose gross annual revenues exceed $250 million, and therefore we are unable to estimate more accurately the number of cable system operators that would qualify as small under this size standard.

48. *Open Video Services (OVS).* In 1996, Congress established the open video system (OVS) framework, one of four statutorily recognized options for the provision of video programming services by local exchange carriers (LECs). The OVS framework provides opportunities for the distribution of video programming other than through cable systems. Because OVS operators provide subscription services, OVS falls within the SBA small business size standard of Cable and Other Program Distribution Services, which consists of such entities having $13.5 million or less in annual receipts. The Commission has certified 25 OVS operators, with some now providing service. Broadband service providers (BSPs) are currently the only significant holders of OVS certifications or local OVS franchises. As of June, 2005, BSPs served approximately 1.4 million subscribers, representing 1.5 percent of all MVPD households. Affiliates of Residential Communications Network, Inc. (RCN), which serves about 371,000 subscribers as of June, 2005, is currently the largest BSP and 14th largest MVPD. RCN

received approval to operate OVS systems in New York City, Boston, Washington, DC and other areas. The Commission does not have financial information regarding the entities authorized to provide OVS, some of which may not yet be operational. We thus believe that at least some of the OVS operators may qualify as small entities.

Internet Service Providers

49. *Internet Service Providers.* The SBA has developed a small business size standard for Internet Service Providers (ISPs). ISPs ''provide clients access to the Internet and generally provide related services such as web hosting, web page designing, and hardware or software consulting related to Internet connectivity.'' Under the SBA size standard, such a business is small if it has average annual receipts of $23 million or less. According to Census Bureau data for 2002, there were 2,529 firms in this category that operated for the entire year. Of these, 2,437 firms had annual receipts of under $10 million, and 47 firms had receipts of $10 million or more but less then $25 million. Consequently, we estimate that the majority of these firms are small entities that may be affected by our action.

50. *All Other Information Services.* ''This industry comprises establishments primarily engaged in providing other information services (except new syndicates and libraries and archives).'' The SBA has developed a small business size standard for this category; that size standard is $6.5 million or less in average annual receipts. According to Census Bureau data for 1997, there were 195 firms in this category that operated for the entire year. Of these, 172 had annual receipts of under $5 million, and an additional nine firms had receipts of between $5 million and $9,999,999. Consequently, we estimate that the majority of these firms are small entities that may be affected by our action.

Equipment Manufacturers

51. *Wireless Communications Equipment Manufacturing.* The Census Bureau defines this category as follows: ''This industry comprises establishments primarily engaged in manufacturing radio and television broadcast and wireless communications equipment. Examples of products made by these establishments are: transmitting and receiving antennas, cable television equipment, GPS equipment, pagers, cellular phones, mobile communications equipment, and radio and television studio and broadcasting equipment.'' The SBA has developed a small business size standard for Radio and Television Broadcasting and Wireless Communications Equipment Manufacturing, which is: all such firms having 750 or fewer employees. According to Census Bureau data for 2002, there were a total of 1,041 establishments in this category that operated for the entire year. Of this total, 1,010 had employment of under 500, and an additional 13 had employment of 500 to 999. Thus, under this size standard, the majority of firms can be considered small.

52. *Telephone Apparatus Manufacturing.* The Census Bureau defines this category as follows: ''This industry comprises establishments primarily engaged in manufacturing wire telephone and data communications equipment. These products may be standalone or board-level components of a larger system. Examples of products made by these establishments are central office switching equipment, cordless telephones (except cellular), PBX equipment, telephones, telephone answering machines, LAN modems, multi-user modems, and other data communications equipment, such as bridges, routers, and gateways.'' The SBA has developed a small business size standard for Telephone Apparatus Manufacturing, which is: all such firms having 1,000 or fewer employees. According to Census Bureau data for 2002, there were a total of 518 establishments in this category that operated for the entire year. Of this total, 511 had employment of under 1,000, and an additional 7 had employment of 1,000 to 2,499. Thus, under this size standard, the majority of firms can be considered small.

53. *Semiconductor and Related Device Manufacturing.* These establishments manufacture ''computer storage devices that allow the storage and retrieval of data from a phase change, magnetic, optical, or magnetic/optical media.'' The SBA has developed a small business size standard for this category of manufacturing; that size standard is 500 or fewer employees. According to Census Bureau data for 1997, there were 1,082 establishments in this category that operated for the entire year. Of these, 987 had employment of under 500, and 52 establishments had employment of 500 to 999.

54. *Computer Storage Device Manufacturing.* These establishments manufacture ''computer storage devices that allow the storage and retrieval of data from a phase change, magnetic, optical, or magnetic/optical media.'' The SBA has developed a small business size standard for this category of manufacturing; that size standard is 1,000 or fewer employees. According to Census Bureau data for 1997, there were 209 establishments in this category that operated for the entire year. Of these, 197 had employment of under 500, and eight establishments had employment of 500 to 999.

Description of Projected Reporting, Recordkeeping, and Other Compliance Requirements

55. The Notice includes a tentative conclusion that carriers should automatically provide accuracy data to PSAPs. Accordingly, it is possible that the Commission may establish rules imposing additional recordkeeping requirements on small entities. The Notice seeks comment on what specific information carriers should provide to PSAPs; the Commission will examine the resulting record to determine whether any requirements should apply to small entities.

Steps Taken to Minimize Significant Economic Impact on Small Entities, and Significant Alternatives Considered

56. The RFA requires an agency to describe any significant alternatives that it has considered in reaching its proposed approach, which may include the following four alternatives: (i) The establishment of differing compliance or reporting requirements or timetables that take into account the resources available to small entities; (ii) the clarification, consolidation, or simplification of compliance or reporting requirements under the rule for small entities; (iii) the use of performance, rather than design standards; and (iv) an exemption from coverage of the rule, or any part thereof, for small entities.

57. In the Notice, the Commission specifically considers the impact of potential revisions to the wireless E911 accuracy rules on small entities. The Notice asks whether certain classes of carriers and/or rural networks should be held to a uniform standard of accuracy if the Commission were to adopt one, and if so, by what date they should be required to come into compliance with a more stringent, uniform accuracy requirement. In previous rulemakings, the Commission has established different compliance deadlines for small wireless carriers. The questions posed in today's Notice will enable the Commission to assess whether similar concessions to small entities are warranted with respect to wireless E911 accuracy requirements.

Federal Rules That May Duplicate, Overlap, or Conflict With the Proposed Rules

58. None.

III. Ordering Clauses

59. Accordingly, it is ordered, pursuant to sections 4(i) and 332 of the Communications Act of 1934, as amended, 47 U.S.C. 154(i), 332, that the *Notice of Proposed Rulemaking* is adopted.

60. It is further ordered that the Commission's Consumer and Governmental Affairs Bureau, Reference Information Center, shall send a copy of the *Notice of Proposed Rulemaking,* including the Initial Regulatory Flexibility Analysis, to the Chief Counsel for Advocacy of the Small Business Administration.

Federal Communications Commission.

Marlene H. Dortch,

Secretary.

[FR Doc. E7–11404 Filed 6–19–07; 8:45 am]

BILLING CODE 6712–01–P

FEDERAL COMMUNICATIONS COMMISSION

47 CFR Part 15

[ET Docket No. 03–65; FCC 07–79]

Interference Immunity Performance Specifications for Radio Receivers

AGENCY: Federal Communications Commission.

ACTION: Termination of proceeding.

SUMMARY: This document terminates the ''Interference Immunity Performance Specifications'' proceeding. The Commission finds that with the passage of time, the NOI and record in this proceeding have become outdated. Further, to the extent receiver interference immunity performance specifications are desirable, they may be addressed in proceedings that are frequency band or service specific. As there does not appear to be a need for further Commission action at this time, we are terminating this proceeding without prejudice to its substantive merits.

DATES: This proceeding is terminated as of May 4, 2007.

FOR FURTHER INFORMATION CONTACT: Rodney Small, Policy and Rules Division, Office of Engineering and Technology, (202) 418–2452, e-mail *Rodney.Small@fcc.gov.*

SUPPLEMENTARY INFORMATION: This is a summary of the Commission's *Order*, ET Docket No. 03–65, FCC 07–79, adopted May 2, 2007 and released May 4, 2007. The full text of this document is available on the Commission's Internet site at *http://www.fcc.gov.* It is also available for inspection and copying during regular business hours in the FCC Reference Center (Room CY–A257), 445 12th Street, SW., Washington, DC 20554. The full text of this document also may be purchased from the Commission's duplication contractor, Best Copy and Printing Inc., Portals II, 445 12th St., SW., Room CY–B402, Washington, DC 20554; telephone (202) 488–5300; fax (202) 488–5563; e-mail *FCC@BCPIWEB.COM.*

Summary of the Order

1. On March 13, 2003, the Commission adopted a *Notice of Inquiry* (''NOI''), 68 FR 23677, May 5, 2003, in this proceeding. The NOI sought information on whether the Commission should incorporate receiver interference immunity performance specifications into spectrum policy decisions on a broad basis.

2. The Commission finds that with the passage of time, the NOI and record in this proceeding have become outdated. Further, to the extent receiver interference immunity performance specifications are desirable, they may be addressed in proceedings that are frequency band or service specific. As there does not appear to be a need for further Commission action at this time, we are terminating this proceeding without prejudice to its substantive merits. If any party wishes to pursue these issues in the future, nothing precludes us from evaluating them in the context of other proceedings.

3. The Commission will not send a copy of this *Order* in a report to be sent to Congress and the Government Accountability Office pursuant to the Congressional Review Act, *see* 5 U.S.C. 801(a)(1)(A), because the *Order* does not adopt any rules it only terminates the proceeding.

Ordering Clauses

4. Pursuant to sections 4(i) and 4(j) of the Communications Act, 47 U.S.C. 154(i) and 154(j), ET Docket No. 03–65 is terminated, as of May 4, 2007.

Federal Communications Commission.

Marlene H. Dortch,

Secretary.

[FR Doc. E7–11811 Filed 6–19–07; 8:45 am]

BILLING CODE 6712–01–P

DEPARTMENT OF COMMERCE

National Oceanic and Atmospheric Administration

50 CFR Part 697

[Docket No. 0612243160–7167–01]

RIN 0648–AU07

Atlantic Coastal Fisheries Cooperative Management Act Provisions; American Lobster Fishery

AGENCY: National Marine Fisheries Service (NMFS), National Oceanic and Atmospheric Administration (NOAA), Commerce.

ACTION: Proposed rule; request for comments.

SUMMARY: NMFS proposes new Federal American lobster (*Homarus americanus*) regulations that would implement further minimum carapace length (gauge) increases, escape vent size increases, and trap reductions in the offshore American lobster fishery, consistent with recommendations for Federal action in the Atlantic States Marine Fisheries Commission's (Commission) Interstate Fishery Management Plan for American Lobster (ISFMP) and pending management actions of the Commission's American Lobster Management Board (Board).

DATES: Comments must be received no later than 5 p.m. eastern standard time on or before August 6, 2007.

ADDRESSES: Written comments should be sent to Harold Mears, Director, State, Federal and Constituent Programs Office, Northeast Region, NMFS, One Blackburn Drive, Gloucester, MA 01930. Comments may also be sent via e-mail to *Lob0607@noaa.gov*, via fax (978) 281–9117 or via the Federal e-Rulemaking portal at *www.regulations.gov*.

FOR FURTHER INFORMATION CONTACT: Peter Burns, Fishery Management Specialist, (978) 281–9144, fax (978) 281–9117, e-mail *peter.burns@noaa.gov*.

SUPPLEMENTARY INFORMATION:

Statutory Authority

The proposed regulations would modify Federal lobster conservation management measures in the Exclusive Economic Zone (EEZ) under the authority of section 803(b) of the Atlantic Coastal Fisheries Cooperative Management Act (Atlantic Coastal Act) 16 U.S.C 5101 *et seq.*, which states, in the absence of an approved and implemented Fishery Management Plan under the Magnuson-Stevens Fishery Conservation and Management Reauthorization Act (Magnuson-Stevens Act) (16 U.S.C. 1801 *et seq.*) and, after

consultation with the appropriate Fishery Management Council(s), the Secretary of Commerce may implement regulations to govern fishing in the EEZ, i.e., from 3 to 200 nautical miles (nm) offshore. The regulations must be (1) compatible with the effective implementation of an ISFMP developed by the Commission and (2) consistent with the national standards set forth in section 301 of the Magnuson-Stevens Act.

Purpose and Need for Management

American lobsters are managed within the framework of the Commission. The Commission serves to develop fishery conservation and management strategies for certain coastal species and coordinates the efforts of the states and Federal Government toward concerted sustainable ends. The Commission, under the provisions of the Atlantic Coastal Act, decides upon a management strategy as a collective and then forwards that strategy to the states and Federal government, along with a recommendation that the states and Federal Government take action (e.g., enact regulations) in furtherance of this strategy. The Federal Government is obligated by statute to support of the Commission's overall efforts. Relevant to this action, the Commission's Lobster Board recommended that the Federal Government create regulations consistent with the measures set forth in the Commission's Lobster ISFMP as identified in Addenda II, III, and IV and XI to Amendment 3 of the ISFMP. As initially adopted, these addenda included management measures for several lobster conservation management areas (LCMAs/Areas) including Area 3, the Outer Cape Cod (Outer Cape) Area and Area 1. Specifically, these measures included an escape vent size increase for both Area 1 and the Outer Cape Area and a series of gauge increases for the Outer Cape Area in addition to the measures considered for Area 3. However, the Board, in May 2006, determined that only the Area 3 measures were required and repealed those specific to the Outer Cape and Area 1. Consequently, NMFS proposes to implement regulatory measures in three general categories for LCMA 3: 1) gauge size increases (recommended in Addenda II); 2) escape vent increases (recommended in Addendum IV); and 3) trap reductions (recommended in Addendum IV and Addendum XI). The proposed regulatory changes serve as the Federal government's response to the Commission's requested action and are consistent with NMFS' resource objectives, legal mandates, and overall practical/managerial requirements.

The best available science suggests and supports the need for broodstock protection and effort reductions for the Southern New England (SNE) stock. The SNE stock encompasses all of Areas 4, 5, and 6, and part of Areas 2 and 3. The Commission has adopted measures for the areas other than Area 3 that NMFS will address in future and ongoing rulemakings. The Area 3 broodstock and effort control measures relevant to this action directly address the concerns of the most recent stock assessment.

The peer-reviewed lobster stock assessment in 2005 showed that the American lobster resource presents a mixed picture (see the Commission Stock Assessment Report No. 06–03, published January 2006 at *www.asmfc.org*.). One theme throughout the assessment was the high fishing effort and high mortality rates in all three stock areas. The assessment indicated that there is stable abundance for the Georges Bank (GBK) stock and much of the Gulf of Maine (GOM) stock and decreased abundance and recruitment, yet continued high fishing mortality rates, for the SNE stock and in Statistical Area 514 (Massachusetts Bay and Stellwagen Bank) in the GOM stock. Of particular concern in the 2005 peer-reviewed stock assessment report is the SNE stock, where depleted stock abundance and recruitment coupled with high fishing mortality rates over the past few years led the stock assessment and peer review panel to recommend additional harvest restrictions. The SNE stock encompasses all of Areas 4, 5, and 6, and part of Areas 2 and 3. Overall, stock abundance in the GOM is relatively high with recent fishing mortality comparable to the past. The GOM stock encompasses all of Area 1, and part of both Area 3 and the Outer Cape Management Area. Currently, high effort levels in GOM continue in concert with high stock abundance, although high effort levels are not likely to be supportable if abundance returns to long-term median levels. The GBK stock seems stable, with current abundance and fishing mortality similar to the 20-year average. The GBK stock encompasses part of Areas 2, 3, and the Outer Cape Management Area. While the report noted the female proportion of the stock is increasing slightly, it also cautioned that further increases in effort are not advisable, hence, the need for additional effort reduction and broodstock protection.

Background

The Commission's American lobster management strategy is neither predicated upon a single measure nor is it contained within a single document. Rather, the structure is based on facilitating ongoing adaptive management with necessary elements implemented over time. The Commission set forth the foundation of its American Lobster ISFMP in Amendment 3 in December 1997. The Federal Government issued compatible regulations that complemented Amendment 3 in December 1999. Amendment 3 regulations established assorted measures that directly, even if preliminarily, address overfishing (e.g., trap caps and minimum gauge sizes). Amendment 3 created seven lobster management areas and established industry-led lobster management teams that make recommendations for future measures to end overfishing, based on the current status of the stocks. Additional management measures were set forth in subsequent Amendment 3 addenda including measures to limit future access to LCMAs 3, 4, and 5 in Addendum I (approved by the Commission in August 1999 and compatible Federal regulations enacted March 2003); and measures to increase protection of American lobster broodstock in Addenda II and III (approved by the Commission in February 2001 and February 2002, respectively, and compatible Federal regulations enacted March 2005). Addenda II and III measures include gauge increases and mandatory v-notch requirements for Area 3. Additional lobster management measures, notably measures that would control effort, were set forth in later addenda, including Addendum III, and relative to this action, Addendum IV (approved by the Commission in December 2003)that included additional trap reductions in Area 3; Addendum V (approved by the Commission in March 2004) that included a reduced trap cap in Area 3; Addendum VI (approved by the Commission in February 2005); Addendum VII (approved by the Commission in November 2005); Addendum VIII (approved by the Commission in May 2006); Addendum IX (approved by the Commission in October 2006), Addendum X (approved by the Commission in October 2006), and Addendum XIthat includes recommendations for additional trap reductions and a delay in the escape vent size increase in Area 3 (approved by the Commission in May 2007).

This current Federal rulemaking is one of three (3) Federal rulemakings that

have their genesis, at least in part, in Commission Addenda II and III.

The first Addenda II—III rulemaking began with the publishing, in the **Federal Register**, of an advance notice of proposed rulemaking (''ANPR'') on May 24, 2001 (66 FR 28726), and ended with the publishing of a final rule on March 14, 2006 (71 FR 13027). This first rulemaking focused primarily on the broodstock protection measures set forth in the two addenda, and it was this similarity in purpose that resulted in NMFS combining the addenda recommendations into a single rulemaking. Addenda II and III, however, also contained additional management recommendations; most notably effort control measures and ''if necessary'' measures, so called because they would be considered only if determined necessary in later years. These separate measures became more prominent as the Commission issued later addenda, causing NMFS to start a second rulemaking involving Addenda II—III in 2005.

The second Addenda II—III rulemaking actually focuses more on Commission Addenda IV—VII. This second rulemaking formally began with NMFS' publication of an ANPR in a **Federal Register** notice dated May 10, 2005 (70 FR 24495), and remains ongoing. Specifically, NMFS determined that the Addenda II—III effort control measures were modified substantively and revised by the Commission's Addenda IV, V, VI, and VII. Overall, measures proposed in those Addenda involve additional limited access programs for Area 2 and the Outer Cape LCMAs and proposals to transfer traps in LCMAs 2, 3 and the Outer Cape. As a result, NMFS will analyze the Addenda II—III effort control programs as a component of the larger more detailed second rulemaking associated with the effort control recommendations in Addenda IV—VII. NMFS is still engaged in this second proposed rulemaking, and the Commission's effort control measures are still under analysis.

The third proposed Addenda II—III rulemaking, which is represented in this proposed rule, also involves later Commission action, most notably draft Addendum XI. This third proposed rulemaking formally began on December 13, 2005, with NMFS' publication of an ANPR in the **Federal Register** (70 FR 73717). The rulemaking initially focused on Addenda IIIII's so called ''if necessary'' measures because, although the measures were in Addenda II—III at the time of the first Federal rulemaking, the Commission had not actually deemed them necessary until too late in the process for their inclusion in the March 26, 2006, final rule. Ultimately, the Commission modified the requirements of the ISFMP, voting on May 8, 2006 that the ''if necessary'' measures were, in fact, required only in LCMA 3, but not in the other LCMAs. The repealed measures include the additional escape vent size increase for LCMA 1 (2 inches × 5¾ inches (5.08 cm × 14.61 cm) rectangular or 2⅝ inches (6.67 cm) circular by 2008); in the Outer Cape Cod LCMA, four additional 1/32 inch (0.08 cm) gauge increases up to 3½ inches (8.89 cm) by July 2008 and an escape vent increase to 2 1/16 inches × 5¾ inches (5.24 cm × 14.61 cm) rectangular or 2 11/16 inch (6.83 cm) circular by 2008.

The Commission voted to approve draft Addendum XI for public comment on January 31, 2007, and the document was approved as part of the ISFMP on May 8, 2007. The Addendum includes two additional 2.5 percent trap reductions for LCMA 3 and a delay in the implementation of the LCMA 3 escape vent size increase until 2010. NMFS incorporated the Addendum XI proposed measures in this third rulemaking in an ANPR filed in the **Federal Register** on December 18, 2006 (71 FR 75705), with the expectation that the Board would ultimately adopt the measures as part of the lobster management framework.

At present, most states have issued their complementary regulations; the Federal Government has not. Most Federal lobster permit holders also hold a state lobster license, and they must abide by the ISFMP measures by virtue of their state license, even if the same restrictions have not yet been placed on their Federal permit. Generally, the exception to state coverage of all ISFMP measures, under the Commission's ISFMP, is for states that are classified as de minimis states. The focus of the analysis of measures in this action is for Federal lobster permit holders from states that have not implemented all measures in the Commission's ISFMP, and, in the case of this proposed rule, exceptions to coverage exist for Federal permit holders from Connecticut, New Jersey, and the de minimis states. Both the states of New Jersey and Connecticut voted to approve Addenda II and III and it is expected that those states will issue compatible regulations in the immediate future.Certain states at the southern end of the range qualify for de minimis status because a given state's declared annual landings, averaged over a two-year period, amount to less than 40,000 lb (18,144 kg) of American lobster. While de minimis states are required to promulgate all coastwide measures contained in Section 3.1 of Amendment 3, many of the area-specific measures for Area 3 identified in this action are not required to be implemented by the de minimis states. However, Federal lobster regulations apply to all entities fishing for lobster in Federal waters, including Federal permit holders in de minimis states.

Based on the preliminary impact analysis relative to this proposed rule, a negligible number of Federal trap and non-trap vessels would be impacted by adoption of the proposed measures. The impacts are concentrated on those few vessels hailing from Connecticut, New Jersey and the de minimis states. However, should Connecticut and New Jersey ultimately implement these measures as mandated by the Commission's ISFMP, as expected, the impacts will be reduced even further.Impacts in the de minimis states are also expected to be minimal; by definition, the lobster catch has to be small to even qualify for de minimis status and lobster catch is not a principle component of the overall fishery in those states.In addition to the minimal impacts associated with Federal action, adoption of the proposed measures into the Federal regulations will facilitate the cooperative state and Federal enforcement of lobster regulations by reducing the regulatory gap between the states and NMFS.

Comments and Responses

Addenda II through VII to Amendment 3 of the Atlantic States Marine Fisheries Commission's Interstate Fishery Management Plan (ISFMP) for American lobster are part of an overall lobster fishery management regime which is intended to achieve a healthy resource, develop a management regime that provides for sustainable harvest, maintains opportunities for participation, and provides for the cooperative development of conservation measures by stakeholders. In an ANPR published in the **Federal Register** on December 13, 2005 (70 FR 73717), NMFS sought public comment on the implementation of further minimum gauge and escape vent size increases in the Federal lobster fishery consistent with the Commission's recommendations for Federal action across multiple Lobster Conservation Management Areas. Subsequent to that publication, many LCMA-specific Commission recommendations were modified in response to information in an updated peer-reviewed stock assessment published in January 2006 (see detailed information in Background section). Consequently, NMFS published an

ANPR on December 18, 2006 in the **Federal Register** (71 FR 75706), which revises the previous ANPR and, again, invited comments on the implementation of updated gauge increase, escape vent size increase, and trap reductions in the offshore American lobster fishery, consistent with the ISFMP for American lobster. At the time of publication, the latest ANPR included measures that had yet to be adopted by the Board, in the interest of time required to promulgate Federal regulations and to facilitate evaluation of the associated impacts by bundling like measures into a single analysis. This section is specific to the comments received on the measures relevant to this proposed rule. Therefore, comments from the first ANPR regarding measures that are no longer related to this rulemaking are not addressed here. NMFS notes that the public is encouraged to submit comments on this proposed rule during the comment period, as specified in the **DATES** section of this document.

Overall Summary of Comments Received in Response to the First ANPR

To summarize, a total of 17 comments were received in response to the two ANPR's that were published relevant to this action. The comments ranged from full support of the proposed measures to recommendations of alternate measures and requests for stricter enforcement. Half of the comments support all or a portion of the measures to increase gauge size, increase escape vent size, and incrementally reduce trap allocations. A total of 6 comments proposed alternative conservation measures, including alternate gauge increases, a maximum size, and establishing a buyback program. Some comments voiced concerns that stricter regulations and additional enforcement will be necessary.

Breakdown of Comments Received for Each Request for Comments

ANPR published on December 13, 2005 (70 FR 73717)

Five comments were received, of which two fully supported the suite of measures that are required by Amendment 3 of the ASMFC American Lobster FMP. The additional three commenters were generally opposed to the rulemaking for a myriad of reasons. Of these, one proposed to halt the minimum gauge increases at 3$^{7}/_{16}$ inches (8.7 cm) (the July 2006 level) and simultaneously enact a maximum gauge size at 6.0 inches (15.24 cm), for the protection of large female lobsters. Another stated that the conservation measures included in the ANPR were not strong enough. The last noted that as a recent stock assessment has been completed, it would be imprudent to implement management measures based on an outdated stock assessment.

ANPR published on December 18, 2006 (71 FR 75706)

A total of 11 comments were received in response to the ANPR published on December 18, 2006. Four of the commenters supported the entire suite of measures addressed in the ANPR. Two additional comments supported a specific portion of the proposed regulations. One voiced support for the proposed vent increase, and recommended that the increases come all at once instead of incrementally. The second supported the gauge increase but could not support a future maximum size limit. Several other commenters proposed additional initiatives such as a maximum size, a permit buyback, a trap fishing moratorium on Stellwagen Bank, and an 1,800 trap limit in Area 3 with a subsequent 10 percent trap reduction. Two commenters called for further enforcement of lobster regulations.

Response to Comments

Comment 1: Six of the 11 commenters responding to the second ANPR are in favor of the gauge increases and escape vent size increases and the associated delay of the vent increase until 2010. Five of those six commenters are in favor of the full suite of trap reductions proposed in this action.

Response: NMFS believes that adoption of these measures will benefit the industry and the lobster resource and will create a more consistent set of state and Federal lobster regulations which will facilitate enforcement.

Comment 2: Within responses to the first ANPR, several voice their disapproval. Particularly, one opposed the proposed gauge increases. Additionally, another noted that the recent stock assessment should be considered before management decisions are made.

Response: Since the first ANPR was published, a new stock assessment was released. Its findings prompted the Board to eliminate many of the management measures that were previously included in the ISFMP (see Background and Management Measures Considered but Rejected at this Time). As a result, this rulemaking is consistent with the revised recommendations for Federal action in the ISFMP. It also considers the findings of the most recent stock assessment published in January 2006 (see Purpose and Need for Management).

Comment 3: One commenter expressed support for a single vent increase as proposed, since frequent escape vent changes can wear out traps and are difficult to perform at sea.

Response: Escape vents facilitate lobster survivability and can, depending upon the minimum size and corresponding vent size, allow legal sized lobsters a chance to escape from the traps, with unquantifiable benefits to egg production. However, given the proposed gauge increases in this action, consistent with the ISFMP and Area 3 LCMT recommendations, NMFS proposes to postpone the next escape vent size increase until 2010. This may provide some relief to the offshore industry regarding the costs and time associated with replacing the vent. Any foregone biological benefits associated with not requiring the larger vent prior to 2010, will likely be offset by the increase in the minimum size over the next two years, to 3½ inches (8.89 cm). NMFS Trawl Survey data has indicated that the median lobster size for the Georges Bank stock far exceeds 3½ inches (8.89 cm), so most lobster that are caught in the traps are likely at or above the intended 3½ inch (8.89 cm) minimum size.Further, to the extent that a sub-legal lobster is unable to use a smaller escape vent, the best available science indicates that lobster bycatch experience low mortality when returned to the sea.

Comment 4: Three commenters recommended additional measures to what was included in either ANPR including a permit buyback program, a trap limit of 1,800 traps, with a subsequent 10 percent trap reduction, and a trap moratorium on Stellwagen Bank.

Response: The Area 3 LCMT has proposed a plan for a lobster trap buyback in Area 3 and the plan is under development and has not yet been analyzed by the Commission or recommended to NMFS and would be premature to implement at this time. NMFS initially implemented an 1,800 fixed trap limit in Area 3 in 2000. However, in response to a previous stock assessment indicating that all three stocks of lobster were overfished, NMFS implemented a limited entry program for the lobster trap industry in Area 3 in a rulemaking filed in March 2003 to cap and control fishing effort in the offshore EEZ. This program was based on the recommendations of the Area 3 lobster trap industry and consistent with the recommendations for Federal action in the ISFMP in Addendum I to Amendment 3. Area 3

is now limited to only 139 lobster trap vessels, each with a specific trap limit based on documented fishing history. Future opportunities for trap reductions from a conservation tax from a inter-transferable trap program, currently under analysis by NMFS in a separate rulemaking, consistent with the ISFMP and industry recommendations, could, if adopted into the Federal regulations, assist in the further reduction of traps in Area 3. NMFS will seek public comment on this issue in a separate rulemaking currently under development.

One respondent recommended a moratorium on traps on Stellwagen Bank to assist in the survival of endemic and seasonally migrating fauna. A closed area on Stellwagen Bank, however, is not a formal part of the interjurisdictional lobster management program and if implemented by the Federal Government only, would likely increase regulatory incongruence between jurisdictions. Seasonal closed areas are in effect south of Georges Bank to address gear conflicts between the trap and non-trap fishing sectors. There is no available information regarding a particular biological need to stop trap fishing on Stellwagen Bank in particular and such an action is outside the purpose and need of the present action.

Comment 5: Two commenters differed in opinions about maximum gauge size: one fully supported it, while the other was opposed, but was generally supportive of gauge increases.

Response: A maximum gauge size for Area 3 has long been discussed between industry and management as a potential tool for broodstock protection. On May 8, 2007, the Board adopted Addendum XI to Amendment 3 of the ISFMP which included, in part, a maximum size for lobster harvested from Area 3. The addendum requires a maximum carapace length limit of 7 inches (17.78 cm) in the first year of implementation, with incremental reductions in the maximum size by ⅛ inch (0.32 cm) annually for the following two years resulting in an eventual maximum size of 6inches (17.15 cm). Addendum XI has recommended that the Federal government take action on this measure. Consequently, NMFS will analyze the impacts of the maximum size in Area 3 as adopted into the ISFMP and entertain public comments in a future rulemaking action.

With respect to gauge increases, NMFS proposes to implement the suite of gauge increases as adopted into the ISFMP.

Comment 6: One respondent recommended a five year moratorium on lobster fishing or an increase of 12 inches (30.48 cm) to the current minimum size. Additionally, the commenter recommended a 200 percent increase in the vent size and a 50 percent trap reduction.

Response: The commenter's measures are likely more extreme than necessary to address the sustainability of the resource, fail to address the social and economic impacts and would greatly increase regulatory incongruence between jurisdictions. The proposed measures do not meet the purpose and need of this action and consequently were not analyzed in this rulemaking.

Proposed Changes to the Current Regulations

NMFS proposes the following changes to the Federal American lobster regulations for LCMA 3.

Increase Minimum Carapace Length in Area 3

To protect lobster broodstock NMFS proposes to implement two additional gauge increases that would result in a 3½ inch (8.89 cm) minimum gauge size requirement for LCMA 3 by July 1, 2008. Most states have already begun the four-year gauge increase schedule, beginning in 2005, as mandated by the ISFMP. To remain consistent with the ISFMP, NMFS proposes to implement a gauge increase subsequent to publication of a final rule later in 2007. These measures are consistent with the ISFMP.

Increase Lobster Trap Escape Vent Size for Area 3 in 2010

NMFS proposes escape vent size increases in LCMA 3 to 2 1/16 inches x 5¾ inches rectangular (5.24 cm x 14.61 cm) or two circular vents at 2 11/16 inches diameter (6.83 cm) by July 1, 2010. Although the ISFMP requires the escape vent increase implementation by July 1, 2008, the delay until 2010 is currently included in the Commission's Addendum XI.

Area 3 Lobster Trap Reductions Through 2010

NMFS also is considering a suite of trap reductions in LCMA 3. First, Addendum IV to Amendment 3 of the ISFMP calls for a 10 percent trap reduction implemented over two consecutive years with a scheduled 5 percent reduction for 2007 and a 5 percent reduction in 2008. To address the need for further fishing mortality and fishing effort reductions in the offshore fishery as identified in the updated stock assessment released in 2005, the Board developed Addendum XI, that included consideration of an additional 5 percent reduction in traps in LCMA 3, to be implemented as a 2.5 percent reduction each year for two consecutive years following the initial 10 percent trap reduction specified in Addendum IV. The Commission voted to approve draft Addendum XI for public comment on January 31, 2007, and subsequently Addendum XI was approved by the Commission on May 9, 2007, including the requirement for an additional 5 percent reduction in traps in LCMA 3. Table 1 illustrates the LCMA 3 gauge increases, escape vent size increases and the 10 percent trap reductions currently recommended in the ISFMP for Federal implementation. Also included in the table are the two additional 2.5 percent trap reductions for LCMA 3 just approved by the Board in May 2007. These pending trap reductions are included within the scope of this rulemaking because they have been adopted into the ISFMP and recommended for Federal implementation.

Table 1. American Lobster ISFMP Gauge, Escape Vent and Trap Reduction Schedule for LCMA 3 and Corresponding Federal Action (Includes only the measures currently recommended in the ISFMP for Federal implementation and relevant trap reductions).

[MEASUREMENTS ARE IN INCHES]

LCMA	Addenda II-VIII, XI			Current Federal Lobster Regulations		Proposed Changes to Federal Lobster Regulations		
	gauge	vent*	trap reductions	gauge	vent*	gauge	vent*	trap reductions**
LCMA3	3 3/8 July 2004 3 13/32 July 2005 3 7/16 July 2006 3 15/32 July 2007 3 ½ July 2008	2 1/16 X 5 3/4 rectangular or 2 11/16 circular by 2010	5% in 2007 5% in 2008 2.5% in 2009 2.5% in 2010	3 3/8	2 X 5 3/4 rectangular or 2 5/8 circular	3 15/32 in 2007 3 ½ by 2008	2 1/16 X 5 3/4 rectangular or 2 11/16 circular by 2010	5% in 2007 5% in 2008 2.5% in 2009 2.5% in 2010

* All vent sizes include a rectangular and corresponding circular vent size. In all cases, each trap is required to have one rectangular vent or two circular vents at the sizes indicated.

** The two 5% trap reductions scheduled for 2007 and 2008 were established in Addendum IV; the two 2.5% reductions and delay of the escape vent increase until 2010 were incorporated into the ISFMP in Addendum XI.

Management Actions Considered but Rejected at this Time

Referring specifically to the proposals discussed in this section, the Commission Lobster Board (Board) took several actions in 2001 and 2002 that were contingent in part on the future status of the lobster stocks, as determined by updated stock assessment information. In essence, several Area-specific management measures were inserted in Addenda II—IV that would be implemented if the measures were deemed ''necessary'' to meet the ISFMP goals and objectives. These proposed measures are commonly referred to as the ''if necessary'' measures. The Board approved several ''if necessary'' provisions, including: provisions for additional lobster minimum gauge increases for Area 3 and the Outer Cape Area, and provisions to increase the lobster trap escape vent size for traps fished in Area 1 and Area 3. In addition, if ISFMP trap reduction targets for the Outer Cape Management Area were not met from the implementation of a limited entry transferable trap program outlined in Addendum I, the ISFMP included ''if necessary'' provisions to continue additional trap reductions totaling 10 percent over two years. When an updated lobster stock assessment was completed in January 2006 (ASMFC 2006), the Board revisited the ''if necessary'' proposals specified in Addenda II—IV. Based on the updated assessment, on May 8, 2006, the Lobster Board repealed the ''if necessary'' provisions described above for LCMAs where the lobster stocks are not considered overfished. For copies of the 2006 Assessment, or Addenda II—IV, visit the Commission website at: *http://www.asmfc.org/*.

In addition to the ''if necessary'' proposals outlined in the paragraph above, the Board took several actions in 2002–2003 to address the reported sharp decline in lobster landings in Area 2, (the nearshore Area adjacent to Massachusetts, Rhode Island, Connecticut, and New York). Based on several meetings between the Area 2 industry, the Commission, and impacted state and Federal agencies, in February 2003, the Board took Emergency Action to implement an increase in the minimum gauge size in Area 2, from 3⅜ inches to 3½ inches (8.57 cm to 8.89 cm), pending further evaluation of the scope and extent of the resource decline, and implementation of appropriate management action to address the Area 2 situation. At that time, the Area 2 LCMT began development of a comprehensive limited access program for Area 2 that ultimately was incorporated in Addendum VII, approved in November, 2005 by the Commission. A component of Addendum VII included the revocation of the Emergency Action that mandated the increase in the minimum gauge size in Area 2, and established a minimum gauge size in Area 2 of 3⅜ inches (8.57 cm). NMFS is analyzing the Addendum VII recommendations in a separate rulemaking.

Implement an Area 1 Lobster Trap Escape Vent Increase by 2007

The Commission approved an ''if necessary'' provision to increase the lobster trap escape vent size for traps fished in Area 1 as specified in Addendum III, approved by the Commission in February 2002. If this provision had not been rescinded by the Commission on May 8, 2006, the ISFMP would require a lobster trap escape vent size increase in Area 1 from one rectangular escape vent measuring per trap at least 1 15/16 inches by 5¾ inches (4.92 cm x 14.61 cm), or two circular escape vents measuring 2 7/16 inches (6.19 cm), to a requirement for each trap to contain at least one rectangular escape vent measuring at least 2 inches by 5¾ inches (5.08 cm x 14.61 cm), or two circular escape vents measuring 2½ inches (6.35 cm), later revised in Addendum IV to 2⅝ inches (6.67 cm) circular. The Area 1 trap escape vent increase was rescinded by the Commission after a determination, based on the updated stock assessment completed in 2006, that the measure was unnecessary to meet the ISFMP goals and objectives for the Gulf of Maine lobster stock, as previously specified in Addendum III. Therefore, based on that determination, the Area 1 trap escape vent increase is no longer considered as a recommendation for complementary action by the Federal government. To implement such a measure at the Federal level would create a regulatory incongruence between the Federal regulations and the Commission Lobster Plan. Accordingly, the measure is considered but NMFS is proposing that it be rejected for this action.

Increase the Minimum Gauge Size in Outer Cape Management Area by 2008

The Commission approved an ''if necessary'' provision to increase the Outer Cape Management Area minimum gauge size to 3½ inches (8.89 cm) by 2008 as specified in Addendum III, approved by the Commission in February 2002. If this provision had not been rescinded by the Commission on May 8, 2006, the minimum gauge size for all lobsters taken in the Outer Cape Management Area would increase from the current minimum gauge size of 3⅜

inches (8.57 cm) to 3½ inches (8.89 cm). The Outer Cape Management Area minimum gauge size provision was rescinded by the Commission after a determination, based on the updated stock assessment completed in 2006, that the measure was unnecessary to meet the ISFMP goals and objectives for the Gulf of Maine lobster stock, as previously specified in Addendum III. Therefore, based on that determination, the Outer Cape Management Area minimum gauge size provision is no longer considered as a recommendation for complementary action by the Federal government. To implement such a measure at the Federal level would create a regulatory incongruence between the Federal regulations and the Commission Lobster Plan. Accordingly, the measure is considered but NMFS is proposing that it be rejected for this action.

Active Trap Reductions for the Outer Cape Management Area

The Commission approved an ''if necessary'' provision to require lobster vessels with trap allocations in the Outer Cape Management Area be reduced by 5 percent per year for a two year period if a limited entry transferable trap program, approved for the Outer Cape Management Area in Addendum III, did not achieve a 20 percent reduction in the total number of traps allowed to be fished in the Outer Cape Management Area. The Outer Cape Management Area If Necessary trap reduction schedule provision was rescinded by the Commission after a determination, based on information provided by the impacted state management agency, that the limited entry transferable trap program had meet the ISFMP goals and objectives, as previously specified in Addendum III. Therefore, based on that determination, the Outer Cape Management Area ''if necessary'' trap reduction provision is no longer considered as a recommendation for complementary action by the Federal government. To implement such a measure at the Federal level would create a regulatory incongruence between the Federal regulations and the Commission Lobster Plan. Accordingly, the measure is considered but NMFS is proposing that it be rejected for this action.

Increase in the Area 2 Minimum Gauge Size up to 3½ Inches (8.89 cm) by 2008

The Commission approved in February 2003, via Emergency Action, a provision to increase the minimum gauge size in Area 2, from 3⅜ inches to 3½ inches (8.57 cm to 8.89 cm). During this time period, the Area 2 LCMT and impacted participants in the Area 2 lobster fishery, held multiple public meetings that culminated in approval of a limited entry transferable trap program for Area 2 as specified in Addendum VII, approved November 2005. Based on the implementation of an integrated plan to address the status of the stock in Area 2, in Addendum VII, the Commission approved the revocation of the Emergency Action that mandated the minimum gauge size increase in Area 2, and, by the same action, established a minimum gauge size in Area 2 of 3⅜ inches (8.57 cm). Therefore, based on that determination, the provision to increase the minimum gauge size in Area 2 is no longer considered as a recommendation for complementary action by the Federal government. To implement such a measure at the Federal level would create a regulatory incongruence between the Federal regulations and the Commission Lobster Plan. Accordingly, the measure is considered but NMFS is proposing that it be rejected for this action.

Classification

This proposed rule has been determined to be not significant for the purposes of Executive Order (E.O.) 12866.

This proposed rule does not contain policies with Federalism implications as defined in E.O. 13132.

NMFS prepared an Initial Regulatory Flexibility Analysis (IRFA) as required by section 603 of the Regulatory Flexibility Act (RFA). The IRFA describes the economic impact this proposed rule, if adopted, would have on small entities. A description of the action, the reason for consideration, and its legal basis are contained in the **SUMMARY** section of the preamble in this proposed rule.

As previously described, the proposed action would implement two additional gauge increases that would result in a 3½ inch (8.89 cm) minimum gauge size requirement for LCMA 3 by July 1, 2008. Most states have already begun the four-year gauge increase schedule in 2005 as mandated by the ISFMP which brings the ISFMP's minimum size in Area 3 to 3 15/32 inches (8.81 cm) beginning July 1, 2007, with the final 1/32 inch (0.08 cm) increase scheduled for July 1, 2008. Therefore, NMFS proposes to implement a gauge increase subsequent to publication of a final rule later in 2007 that will raise the minimum carapace length in Area 3 to 3 15/32 inches (8.81 cm), with the regulatory text specifying an additional increase to 3½ inches (8.89 cm) effective July 1, 2008. In addition, NMFS proposes to adopt the escape vent size increase for lobster traps in Area 3 to 2 1/16 inches x 5¾ inches rectangular (5.24 cm x 14.61 cm) or two circular vents at 2 11/16 inches diameter (6.83 cm). However, consistent with an industry proposal recently approved by the Commission's Lobster Management Board in Addendum XI, NMFS proposes to delay the implementation of the Area 3 escape vent size increase until July 1, 2010. Finally, NMFS proposes a suite of trap reductions in LCMA 3. First, Addendum IV to Amendment 3 of the ISFMP calls for a 10 percent trap reduction implemented over two consecutive years with a scheduled 5 percent reduction for 2007 and a 5 percent reduction in 2008. To address the need for further fishing mortality and fishing effort reductions in the offshore fishery as identified in the updated stock assessment released in 2005, the Board developed Addendum XI, that included consideration of an additional 5 percent reduction in traps in LCMA 3, to be implemented as a 2.5 percent reduction each year for two consecutive years following the initial 10 percent trap reduction specified in Addendum IV. The Commission voted to approve draft Addendum XI for public comment on January 31, 2007, and subsequently Addendum XI was approved by the Commission on May 8, 2007, including the requirement for the two additional 2.5 percent reductions in traps in LCMA 3. Table 1 illustrates the LCMA 3 gauge increases, escape vent size increases, the 10 percent trap reductions recommended in Addendum IV to the ISFMP and the two additional 2.5 percent trap reductions for LCMA 3 recommended in Addendum XI, approved by the Board in May 2007.

The proposed action was compared to the no action alternative and one other alternative as noted in Table 1 of this proposed rule. In summary, the no action alternative would retain the current LCMA 3 vessel-specific trap allocations, and retain the current Federal minimum gauge and escape vent sizes in LCMA 3. The non-preferred alternative would implement a 10% trap reduction over two years as specified in Addendum IV, increase the minimum gauge size from 3⅜ inches (8.57 cm) to 3½ inches (8.89 cm) over four years, and increase the escape vent size in 2008. The preferred alternative selected for this proposed action would implement a 15% trap reduction over four years as specified in Addendum IV and Addendum XI, increase the minimum gauge size to 3½ inches (8.89 cm) over two years to coincide with the gauge size requirements

specified for the last two years (2007 and 2008) of the Commission's four year minimum gauge schedule, and implement the escape vent size increase in 2010 as specified in Addendum XI.

After fully evaluating all three alternatives, the proposed alternative is preferred for several reasons. This preferred option would best address the concerns of the stock assessment and call for action to reduce effort and provide for broodstock protection because, simply, it would bring all Federal lobster permit holders under the same set of regulations. As explained in the draft environmental assessment completed for this action, the impacts associated with no action, or limited action will have a negligible effect on the biology of the lobster resource since nearly the entire fishery is or will be bound under state regulations to the suite of Area 3 management measures adopted into the ISFMP. However, the preferred alternative will facilitate the effective management of the resource by providing a standard gauge size for all Federal lobster vessels that fish in or elect to fish in Area 3, including those not covered under state lobster regulations. The states and the Commission's Lobster Board, with input from public sector scientists and the Area 3 lobster industry, have indicated the need for these additional gauge increases to further conserve the offshore lobster fishery and ensure its sustainability. The Commission has recommended that the Federal government adopt these gauge increases into the Federal regulations to assist in this goal. By adopting these gauge increases in Area 3, NMFS will support the Commission's ISFMP in the conservation of the resource with compatible measures for fishery management.

The delay in the implementation of the escape vent increase will offer a more palatable option for a sector of the industry that has been relatively proactive in developing and promoting its own regulatory program: the epitome of area management. In the meantime, the gauge increases will afford protection to legal lobster that are not able to escape from the current vents. Finally, the preferred alternative would implement the Commission's adopted trap reductions and seizes the opportunity, on the prompting of industry, to address scientific concerns associated with fishing effort, to further ensure that latent and real-time effort are controlled to the maximum degree available under the current management scenario.

Description of and Estimate of the Number of Small Entities to Which the Proposed Rule Would Apply

The proposed action would have a potential effect on the 139 federally permitted vessels with an Area 3 trap allocation. The proposed action would also have a potential effect on federally permitted vessels that elected to fish lobster using non-trap gear of which there were 1,105 in fishing year 2006. Gross sales for any one of these vessels would not exceed the small business size standard for commercial fishing of $4 million. Therefore, all 1,244 fishing businesses are considered small entities for purposes of the Regulatory Flexibility Act (RFA).

Since the proposed action would only change regulations for trap and non-trap vessels fishing in Area 3, only vessels that actually fished or intend to fish in Area 3 would be effected. Available data indicate that 87 of the 139 vessels with an Area 3 trap allocation and 265 non-trap vessels actually landed lobster while fishing Area 3 for a total of 352 small entities (about 30 percent of the total number of potentially effected permit holders) that have demonstrated recent participation in the Area 3 lobster fishery.

The ASMFC has lead responsibility for managing lobster and developing a regulatory framework for implementation by the individual member states and making recommendations for complementary action by the Federal government. Since nearly all permit holders must be licensed in a state and are bound by the most restrictive management measures no matter where they fish, Federal action will have added economic impact only in cases where the federal regulation would be more restrictive than any given state regulation. The proposed Federal action would either align Federal regulations with that of already existing state regulations or anticipates highly probable state actions to be taken in the future.

Economic Impacts of the Proposed Action

Minimum Size Increases

The ISFMP calls for a scheduled increase of 1/32 inch (0.08 cm) from 3 3/8 inches (8.57 cm) in Area 3 in 2004 to 3 1/2 inches (8.89 cm) by July 2008. These scheduled gauge increases have already been implemented by all states except for New Jersey, Connecticut and the de minimis states. Currently, the minimum Federal gauge size in Area 3 is 3 3/8 inches (8.57 cm). However, since the majority of lobster trap and non-trap vessels are licensed in states that have already implemented the ASMFC recommended size increases for Area 3, only 21 of the participating federally permitted trap and non-trap vessels are currently able to retain lobster at the lower federal minimum gauge. The proposed action would raise the gauge to 3 15/32–inches (8.81 cm) in July 2007 and to 3 1/2 inches (8.89 cm) in July 2008. This schedule would replicate what has already been implemented by most states and would effect the 21 participating Area 3 vessels that are currently licensed in states that have not implemented the recommended gauge size.

The economic impact on these vessels is uncertain but is expected to be low for the 6 effected trap vessels and even lower for the 15 effected non-trap vessels. That is, lobsters landed from Area 3 tend to be larger than lobsters landed elsewhere. For example, sea sampling data indicate that the minimum carapace length for 98 percent of non-trap lobster landings on observed trips was at least 3 1/2 inches (8.89 cm) in both 2004 and 2005. Assuming the size distribution of the trap-gear catch is similar to that of non-trap gear the majority of lobster income by either trap or non-trap vessels would be unaffected by the increase in the Area 3 Federal gauge. However, non-trap vessel impacts are likely to be proportionally lower than that of the trap vessels because lobster comprises only a small percentage of total fishing income for non-trap vessels.

Escape Vent Size Increase

When the environmental assessment was conducted to evaluate the impacts of this proposed action, the Commission had not yet adopted Addendum XI and therefore, the preferred alternatives associated with the delay of the escape vent size increase and two additional 2.5 percent trap reductions were not yet incorporated into the ISFMP. However, the Commission just recently adopted these measures into the ISFMP in May 2007. Therefore, the proposed action would be consistent with the current ISFMP and would delay implementation of increase in vent size to 2 1/16 x 5 3/4 inches (5.24 cm x 14.61 cm) rectangular or 2 11/16 inches (6.83 cm) circular until 2010 instead of 2008, as originally adopted by the Commission.

Delaying the escape vent size would have no effect on non-trap vessels but would provide some economic relief to any vessel that fished traps in Area 3. The larger escape vent size would allow any sub-legal and some legal sized lobsters to escape. Delaying the increase in escape vent size would retain all legal

sized lobsters which would provide some compensation for the change in the minimum gauge size since more legal size lobsters would be retained. Note that all vessels would still be required to bear the cost of replacing non-conforming escape vents but the two-year delay in implementation provide sufficient additional income to offset the cost of replacing escape vents. Adoption of this measure would also maintain consistency between the state escape vent size requirements for Area 3 as dictated by the ISFMP, and Federal regulations.

Trap Reductions

The preferred alternative would implement the Commission recommended reductions in individual trap allocations of 5 percent in July 2007 and in July 2008. In addition, the preferred alternative would also implement two additional reductions in individual allocations or 2.5 percent in 2009 and another 2.5 percent in 2010 recently approved by the Commission in May 2007. Since the majority of states have already implemented the scheduled Area 3 trap reductions for 2007 and 2008 Federal action would not impose any added economic costs on the majority of participating Area 3 trap vessels. Federal action would effect an estimated 13 trap vessels from New Jersey and the de minimis states that have not yet implemented the Area 3 trap reductions for 2007 and 2008.

Regardless of whether states or the Federal government implement trap reductions the economic impact on small entities is difficult to quantify. Given the number of potential adaptations to fishing strategies available to lobster trap businesses, the realized impact on landings and revenue is uncertain but is likely to be proportionally less than the reduction in traps. There may be differences in impact, however, among Area 3 participants that fish in other LCMAs if the total trap allocation falls below the number of traps they may be eligible to fish in those other areas. Specifically, due to the Federal definition of the most restrictive provision, any vessel whose Area 3 trap allocation falls below the number of traps that may be fished elsewhere would still be limited to the smaller of the number of eligible traps in any area. For example, a vessel that qualifies for 800 Area 3 traps and that designates both Area 1 and Area 3 would be able to fish a total of 800 traps in any combination in Area 1 and Area 3. In 2007, however, after the same vessel's Area 3 allocation would decline to 760 Area 3 traps, which would also mean that the number of traps that could be fished in Area 1 would also be limited to 760 traps even though other Area 1 participants would be able to fish 800 traps. Historically, however, Area 3 had a trap cap of 1,800, which was 1,000 traps greater than the 800 trap caps set in the other LCMAs. Accordingly, for the majority of participants, would likely to continue to be so even with reductions. NMFS is presently analyzing its application of the most restrictive trap standard as part of a separate rulemaking.

Economic Impacts of the Non-Preferred Alternatives to the Proposed (Preferred) Action

Non-Preferred Alternatives to the Proposed Minimum Gauge Size Increases

No Action—Taking no action would not change the economic status of the overwhelming majority of participating Area 3 trap and non-trap vessels. No action would provide some economic relief to the 21 vessels identified above. This alternative was not selected because it would perpetuate an inconsistency between state and Federal regulations in Area 3 as well as creating inequities between the majority of Area 3 participants and the small number of vessels that might benefit from continuing present regulations. Furthermore, continued inconsistency would undermine the effectiveness of the ISFMP in promoting cooperative State-Federal management of the lobster fishery.

Implement Scheduled Size Increases Beginning in 2007—This alternative would maintain the original schedule of four consecutive gauge size increases beginning with a 1/32 inch (0.08 cm) increase from 3 3/8 inches (8.57 cm) in July 2007 and ending at 3 1/2 inches (8.89 cm) in 2010. As noted previously this alternative would provide some negligible relief to the 21 vessels that are not currently bound by state regulation. This alternative schedule of gauge increases would eventually resolve any inconsistencies between State-Federal regulations, but would not do so until two years later than the preferred alternative and what has already been implemented by most states effecting the majority of participating small entities. This alternative was not selected since the negligible economic benefit to a small minority of small entities would not outweigh the potential to undermine the intended objectives of the ISFMP to achieve consistency between State-Federal lobster fishery management.

Non-Preferred Alternatives to the Escape Vent Size Increase in 2010

No Action—Taking no action would leave the escape vent in Area 3 at its current size of 2 x 5 3/4 inches (5.08 cm x 14.61 cm) rectangular or 2 5/8 inches (6.67 cm) circular. However, since the ISFMP required, prior to the recent approval of Addendum XI in May 2007, that all states implement the larger escape vents size by 2008, the majority of participating Area 3 trap vessels would be required to replace all escape vents with or without Federal action since the majority of states have already promulgated regulations in accordance with the ISFMP. In the absence of Federal action, a total of 16 vessels would be exempted from the 2008 vent size increases as they are currently licensed by states (Connecticut and New Jersey) that have not yet implemented the recommended change in escape vent size. This action would provide less economic relief across the entire Area 3 trap fishery as compared to the preferred alternative and would perpetuate inconsistency between State-Federal lobster fishery management. For these reasons, the no action alternative is not preferred.

Implement the Escape Vent Size Increase in 2008—The ISFMP had initially adopted 2008 as the implementation year of the escape vent size increase associated with this action. However, with the Commission's adoption of Addendum XI in May 2007, this measure is now part of the ISFMP. Therefore, Federal implementation of this measure would allow for consistency between the ISFMP and Federal regulations. Compared to the preferred alternative, this alternative would require all vessels to replace all escape vents two years earlier without the potential mitigating effects of the higher retention rates associated with a delay in the escape vent size.

Non-Preferred Alternatives to the Area 3 Trap Reductions

No Action—Taking no action would leave the present federally allowable Area 3 trap allocations unchanged. However, the Federal regulations at 50 CFR 697.3(c) require that Federal lobster vessels that designate more than one lobster management area, be limited to the lowest trap allocation of all the lobster management areas associated with the vessel's Federal permit and the lower of any differing state or federal allocations. Since the majority of states have already implemented the ISFMP required 5 percent trap reductions for 2007 and 2008 most participating Area 3 lobster trap vessels would be held to

the state mandated trap allocations even in the absence of Federal action. A small number of vessels (13) from states that have not yet implemented the Commission adopted trap reductions would not be effected under the no action alternative. Since the Commission adopted the LCMT 3 recommended trap reductions for implementation in 2009 and 2010, there would be no appreciable difference in economic impact between the preferred and the no action alternative, with the exception of the 13 vessels that would remain unaffected.

Implement Trap Reductions in Only 2007 and 2008—This alternative would limit the Area 3 trap reductions to 5 percent in 2007 and another 5 percent in 2008 as initially recommended by the Commission. However, the Commission has since adopted the additional 2.5 percent trap reduction in 2009 and again in 2010, consistent with the NMFS preferred alternative. The economic impacts of this alternative on small fishing entities would be equivalent to that of the preferred alternative in 2007 and 2008 and would be similar to that of taking no action. If the Commission had not adopted the Area 3 management team proposed trap reduction in 2009 and 2010, then this alternative would allow participating vessels to fish more traps as compared to the preferred alternative. Since the Commission did implement, in May 2007, the additional trap reductions for 2009 and 2010, a Federal delay would require a separate subsequent action to implement complementary Federal regulations; a process that has frequently resulted in delayed implementation of Commission proposed measures. In this case, there would be added administrative costs associated with taking Federal action but economic impact on small entities fishing traps in Area 3 would be similar to that of the preferred alternative.

List of Subjects in 50 CFR Part 697

Fisheries, Fishing.

Dated: June 14, 2007.

Samuel D. Rauch III,

Deputy Assistant Administrator for Regulatory Programs, National Marine Fisheries Service.

For the reasons set out in the preamble, 50 CFR chapter VI, part 697, is proposed to be amended as follows:

PART 697—ATLANTIC COASTAL FISHERIES COOPERATIVE MANAGEMENT

1. The authority citation for part 697 continues to read as follows:

Authority: 16 U.S.C. 5101 *et seq.*

2. In § 697.19, paragraph (b) is revised to read as follows:

§ 697.19 Trap limits and trap tag requirements for vessels fishing with lobster traps.

* * * * *

(b) *Trap limits for vessels fishing or authorized to fish in the EEZ Offshore Management Area.* (1) Beginning September 1, 2003, vessels fishing only in or issued a management area designation certificate or valid limited access American lobster permit specifying only EEZ Offshore Management Area 3, or, specifying only EEZ Offshore Management Area 3 and the Area 2/3 Overlap, may not fish with, deploy in, possess in, or haul back from such areas more than the number of lobster traps allocated by the Regional Administrator pursuant to the qualification process set forth at § 697.4 (a)(7)(vi) and the maximum trap limits identified in Table 1, Column 2 to this part, except as noted in paragraphs (c) and (e) of this section.

(2) Beginning November 1, 2007, vessels fishing only in or issued a management area designation certificate or valid limited access American lobster permit specifying only EEZ Offshore Management Area 3, or, specifying only EEZ Offshore Management Area 3 and the Area 2/3 Overlap, may not fish with, deploy in, possess in, or haul back from such areas more than the number of lobster traps allocated by the Regional Administrator pursuant to the qualification process set forth at § 697.4 (a)(7)(vi) and the maximum trap limits identified in Table 1, Column 3, to this part, except as noted in paragraphs (c) and (e) of this section.

(3) Beginning July 1, 2008, vessels fishing only in or issued a management area designation certificate or valid limited access American lobster permit specifying only EEZ Offshore Management Area 3, or, specifying only EEZ Offshore Management Area 3 and the Area 2/3 Overlap, may not fish with, deploy in, possess in, or haul back from such areas more than the number of lobster traps allocated by the Regional Administrator pursuant to the qualification process set forth at § 697.4 (a)(7)(vi) and the maximum trap limits identified in Table 1, Column 4, to this part, except as noted in paragraphs (c) and (e) of this section.

(4) Beginning July 1, 2009, vessels fishing only in or issued a management area designation certificate or valid limited access American lobster permit specifying only EEZ Offshore Management Area 3, or, specifying only EEZ Offshore Management Area 3 and the Area 2/3 Overlap, may not fish with, deploy in, possess in, or haul back from such areas more than the number of lobster traps allocated by the Regional Administrator pursuant to the qualification process set forth at § 697.4 (a)(7)(vi) and the maximum trap limits identified in Table 1, Column 5, to this part, except as noted in paragraphs (c) and (e) of this section.

(5) Beginning July 1, 2010, and beyond, vessels fishing only in or issued a management area designation certificate or valid limited access American lobster permit specifying only EEZ Offshore Management Area 3, or, specifying only EEZ Offshore Management Area 3 and the Area 2/3 Overlap, may not fish with, deploy in, possess in, or haul back from such areas more than the number of lobster traps allocated by the Regional Administrator pursuant to the qualification process set forth at § 697.4 (a)(7)(vi) and the maximum trap limits identified in Table 1, Column 6, to this part, except as noted in paragraphs (c) and (e) of this section.

* * * * *

3. In § 697.20, paragraphs (a)(3) through (a)(5) are revised and paragraph (a)(6) through (a)(9) are added to read as follows:

§ 697.20 Size, harvesting and landing requirements.

(a) * * *

(3) The minimum carapace length for all American lobsters harvested in or from the EEZ Nearshore Management Area 2, 4, 5 and the Outer Cape Lobster Management Area is 3⅜ inches (8.57 cm).

(4) The minimum carapace length for all American lobsters landed, harvested or possessed by vessels issued a Federal limited access American lobster permit fishing in or electing to fish in EEZ Nearshore Management Area 2, 4, 5 and the Outer Cape Lobster Management Area is 3⅜ inches (8.57 cm).

(5) The minimum carapace length for all American lobsters harvested in or from the Offshore Management Area 3 is 3 15/32 inches (8.81 cm).

(6) The minimum carapace length for all American lobsters landed, harvested or possessed by vessels issued a Federal limited access American lobster permit fishing in or electing to fish in EEZ Offshore Management Area 3 is 3 15/32 inches (8.81 cm).

(7) Effective July 1, 2008, the minimum carapace length for all American lobsters harvested in or from the Offshore Management Area 3 is 3½ inches (8.89 cm).

(8) Effective July 1, 2008, the minimum carapace length for all American lobsters landed, harvested or

possessed by vessels issued a Federal limited access American lobster permit fishing in or electing to fish in EEZ Offshore Management Area 3 is 3½ inches (8.89 cm).

(9) No person may ship, transport, offer for sale, sell, or purchase, in interstate or foreign commerce, any whole live American lobster this is smaller than the minimum size specified in paragraph (a) of this section.

* * * * *

4. In § 697.21, paragraph (c) is revised to read as follows:

§ 697.21 Gear identification and marking, escape vent, maximum trap size, and ghost panel requirements.

* * * * *

(c) *Escape vents.* (1) All American lobster traps deployed or possessed in the EEZ Nearshore Management Area 1 or the EEZ Nearshore Management Area 6 or, deployed or possessed by a person on or from a vessel issued a Federal limited access American lobster permit fishing in or electing to fish in the EEZ Nearshore Management Area 1 or the EEZ Nearshore Management Area 6, must include either of the following escape vents in the parlor section of the trap, located in such a manner that it will not be blocked or obstructed by any portion of the trap, associated gear, or the sea floor in normal use:

(i) A rectangular portal with an unobstructed opening not less than 1 15/16 inches (4.92 cm) by 5¾ inches (14.61 cm);

(ii) Two circular portals with unobstructed openings not less than 2 7/16 inches (6.19 cm) in diameter.

(2) All American lobster traps deployed or possessed in the EEZ Nearshore Management Area 2, 4, 5, and the Outer Cape Lobster Management Area, or, deployed or possessed by a person on or from a vessel issued a Federal limited access American lobster permit fishing in or electing to fish in the EEZ Nearshore Management Area 2, 4, 5, and the Outer Cape Lobster Management Area, must include either of the following escape vents in the parlor section of the trap, located in such a manner that it will not be blocked or obstructed by any portion of the trap, associated gear, or the sea floor in normal use:

(i) A rectangular portal with an unobstructed opening not less than 2 inches (5.08 cm) x 5¾ inches (14.61 cm);

(ii) Two circular portals with unobstructed openings not less than 2⅝ inches (6.67 cm) in diameter.

(3) Effective through June 30, 2010, all American lobster traps deployed or possessed in the EEZ Offshore Management Area 3, or deployed or possessed by a person on or from a vessel issued a Federal limited access American lobster permit fishing in or electing to fish the EEZ Offshore Management Area 3, must include either of the following escape vents in the parlor section of the trap, located in such a manner that it will not be blocked or obstructed by any portion of the trap, associated gear, or the sea floor in normal use:

(i) A rectangular portal with an unobstructed opening not less than 2 inches (5.08 cm) 5¾ inches (14.61 cm);

(ii) Two circular portals with unobstructed openings not less than 2⅝ inches (6.67 cm) in diameter.

(4) Effective July 1, 2010, all American lobster traps deployed or possessed in the EEZ Offshore Management Area 3, or deployed or possessed by a person on or from a vessel issued a Federal limited access American lobster permit fishing in or electing to fish in the EEZ Offshore Management Area 3, must include either of the following escape vents in the parlor section of the trap, located in such a manner that it will not be blocked or obstructed by any portion of the trap, associated gear, or the sea floor in normal use:

(i) A rectangular portal with an unobstructed opening not less than 2 1/16 inches (5.24 cm) x 5¾ inches (14.61 cm);

(ii) Two circular portals with unobstructed openings not less than 2 11/16 inches (6.82 cm) in diameter.

(5) The Regional Administrator may, at the request of, or after consultation with, the Commission, approve and specify, through a technical amendment of this final rule, any other type of acceptable escape vent that the Regional Administrator finds to be consistent with paragraph (c) of this section.

* * * * *

5. In part 697, Table 1 to part 697 is revised to read as follows:

TABLE 1 TO PART 697—AREA 3 TRAP REDUCTION SCHEDULE

HISTORIC Trap Allocation	Year 2006 Trap Allocation	Year 1—5% Trap Reduction Effective November 1, 2007	Year 2—5% Trap Reduction Effective July 1, 2008	Year 3—2.5% Trap Reduction Effective July 1, 2009	Year 4—2.5% Trap Reduction Effective July 1, 2010
Column 1	Column 2	Column 3	Column 4	Column 5	Column 6
200	200	190	181	176	172
240	240	228	217	211	206
250	250	238	226	220	214
264	264	251	238	232	226
300	300	285	271	264	257
320	320	304	289	282	275
325	325	309	293	286	279
360	360	342	325	317	309
370	370	352	334	326	317
400	400	380	361	352	343
450	450	428	406	396	386
480	480	456	433	422	412
500	500	475	451	440	429
590	590	561	532	519	506
600	600	570	542	528	515
700	700	665	632	616	601
720	720	684	650	634	618
768	768	730	693	676	659
800	800	760	722	704	686
883	883	839	797	777	758
900	900	855	812	792	772

TABLE 1 TO PART 697—AREA 3 TRAP REDUCTION SCHEDULE—Continued

HISTORIC Trap Allocation	Year 2006 Trap Allocation	Year 1—5% Trap Reduction Effective November 1, 2007	Year 2—5% Trap Reduction Effective July 1, 2008	Year 3—2.5% Trap Reduction Effective July 1, 2009	Year 4—2.5% Trap Reduction Effective July 1, 2010
Column 1	Column 2	Column 3	Column 4	Column 5	Column 6
930	930	884	839	818	798
1000	1000	950	903	880	858
1004	1004	954	906	883	861
1020	1020	969	921	898	875
1100	1100	1045	993	968	944
1150	1150	1093	1038	1012	987
1170	1170	1112	1056	1030	1004
1200–1299	1200	1140	1083	1056	1030
1300–1399	1200	1140	1083	1056	1030
1400–1499	1200	1140	1083	1056	1030
1500–1599	1276	1212	1152	1123	1095
1600–1699	1352	1284	1220	1190	1160
1700–1799	1417	1346	1279	1247	1216
1800–1899	1482	1408	1338	1304	1271
1900–1999	1549	1472	1398	1363	1329
2000–2099	1616	1535	1458	1422	1386
2100–2199	1674	1590	1511	1473	1436
2200–2299	1732	1645	1563	1524	1486
2300–2399	1789	1700	1615	1574	1535
2400–2499	1845	1753	1665	1623	1583
2500–2599	1897	1802	1712	1669	1628
2600–2699	1949	1852	1759	1715	1672
2700–2799	2000	1900	1805	1760	1716
2800–2899	2050	1948	1850	1804	1759
2900–2999	2100	1995	1895	1848	1802
3000–3099	2150	2043	1940	1892	1845
3100–3199	2209	2099	1994	1944	1895
>3199	2267	2154	2046	1995	1945

[FR Doc. E7–11964 Filed 6–19–07; 8:45 am]

BILLING CODE 3510–22–S

Notices

Federal Register

Vol. 72, No. 118

Wednesday, June 20, 2007

This section of the FEDERAL REGISTER contains documents other than rules or proposed rules that are applicable to the public. Notices of hearings and investigations, committee meetings, agency decisions and rulings, delegations of authority, filing of petitions and applications and agency statements of organization and functions are examples of documents appearing in this section.

DEPARTMENT OF AGRICULTURE

Submission for OMB Review; Comment Request

June 14, 2007.

The Department of Agriculture has submitted the following information collection requirement(s) to OMB for review and clearance under the Paperwork Reduction Act of 1995, Public Law 104–13. Comments regarding (a) whether the collection of information is necessary for the proper performance of the functions of the agency, including whether the information will have practical utility; (b) the accuracy of the agency's estimate of burden including the validity of the methodology and assumptions used; (c) ways to enhance the quality, utility and clarity of the information to be collected; (d) ways to minimize the burden of the collection of information on those who are to respond, including through the use of appropriate automated, electronic, mechanical, or other technological collection techniques or other forms of information technology should be addressed to: Desk Officer for Agriculture, Office of Information and Regulatory Affairs, Office of Management and Budget (OMB), *OIRA_Submission@OMB.EOP.GOV* or fax (202) 395–5806 and to Departmental Clearance Office, USDA, OCIO, Mail Stop 7602, Washington, DC 20250–7602. Comments regarding these information collections are best assured of having their full effect if received within 30 days of this notification. Copies of the submission(s) may be obtained by calling (202) 720–8958.

An agency may not conduct or sponsor a collection of information unless the collection of information displays a currently valid OMB control number and the agency informs potential persons who are to respond to the collection of information that such persons are not required to respond to the collection of information unless it displays a currently valid OMB control number.

Farm Service Agency

Title: Food Aid Request Entry System (FARES).

OMB Control Number: 0560–0225.

Summary of Collection: The Agricultural Trade Development and Assistance Act of 1954, as amended (Title II, Pub. L. 480), Section 416(b) of the Agricultural Act of 1949, as amended, (Section 416(b)), Food for Progress Act of 1985, as amended (Food for Progress), and the International School Lunch Program, known as the Global Food for Education and Child Nutrition Act, authorizes Commodity Credit Corporation Export Operations Division and Bulk Commodities Division to procure, sell, transport agricultural commodities and obtain discharge/delivery survey information. Commodities are delivered to foreign countries through voluntary agencies, United Nations World Food Program, the Foreign Agricultural Service, and the Agency for International Development. The program information will be electronically captured, requirements validated, and improved commodity request visibility will be provided via FARES web-based application technology tool. The FARES is for the customers to submit online to process the commodity request electronically and to access the information.

Need and Use of the Information: The Farm Service Agency will collect the following information from FARES: The name of the Private Voluntary Organization, the program, the types of commodities being requested for export, quantities of commodities, destinations of commodities, and special requirements for packaging. Without this information collection process, Kansas City Commodity Office would not be able to meet program requirements.

Description of Respondents: Not-for-profit institutions; Business or other-for-profit; Federal Government.

Number of Respondents: 305.

Frequency of Responses: Reporting: Other (bi-weekly/bi-monthly).

Total Burden Hours: 1,708.

Ruth Brown,

Departmental Information Collection Clearance Officer.

[FR Doc. E7–11821 Filed 6–19–07; 8:45 am]

BILLING CODE 3410–05–P

DEPARTMENT OF AGRICULTURE

Agricultural Marketing Service

[Docket AMS–FV–2006–0201; FV–06–314]

United States Standards for Grades of Parsley

AGENCY: Agricultural Marketing Service, USDA.

ACTION: Notice.

SUMMARY: The Agricultural Marketing Service (AMS) of the Department of Agriculture (USDA) is revising the voluntary United States Standards for Grades of Parsley. Specifically, AMS is revising the standards to allow percentages to be determined by count rather than weight. AMS is also eliminating the unclassified category. The revisions would bring the standards for parsley in line with current marketing practices, thereby improving the usefulness in serving the industry.

DATES: *Effective Date:* July 20, 2007.

FOR FURTHER INFORMATION CONTACT: Vincent J. Fusaro, Standardization Section, Fresh Products Branch; (202) 720–2185. The United States Standards for Grades of Parsley are available either through the address cited above or by accessing the AMS, Fresh Products Branch Web site at: *http://www.ams.usda.gov/standards/stanfrfv.htm.*

SUPPLEMENTARY INFORMATION: Section 203(c) of the Agricultural Marketing Act of 1946 (7 U.S.C. 1621–1627), as amended, directs and authorizes the Secretary of Agriculture ''To develop and improve standards of quality, condition, quantity, grade and packaging and recommend and demonstrate such standards in order to encourage uniformity and consistency in commercial practices.'' AMS is committed to carrying out this authority in a manner that facilitates the marketing of agricultural commodities. AMS makes copies of official standards available upon request. The United States Standards for Grades of Fruits

and Vegetables not connected with Federal Marketing Orders or U.S. Import Requirements no longer appear in the Code of Federal Regulations, but are maintained by USDA, AMS, Fruit and Vegetable Programs. AMS is revising the voluntary United States Standards for Grades of Parsley using procedures that appear in Part 36, Title 7 of the Code of Federal Regulations (7 CFR part 36). These standards were last published on July 30, 1930.

Background

Prior to undertaking research and other work associated with revision of the grade standards, AMS published a notice in the **Federal Register** (71 FR 41755) on July 24, 2006, soliciting comments on the possible revisions to the United States Standards for Grades of Parsley. A subsequent notice was published in the **Federal Register** (71 FR 77366–77367) on December 26, 2006, soliciting comments on allowing percentages to be determined by count rather than weight and eliminating the unclassified category. In response to this notice, AMS received one comment from an industry group representing receivers. The comment is available by accessing: *http://www.regulations.gov/fdmspublic/component/main* or AMS's Fresh Products Branch Web site at: *http://www.ams.usda.gov/fv/fpbdocketlist.htm.*

The commenter was in favor of the proposed revision to allow the percentages for tolerances and defects to be determined by count rather than weight.

AMS is eliminating the unclassified category from all standards as they are revised. This category is not a grade and only serves to show that no grade has been applied to the lot. It is no longer considered necessary.

Based on the comment received and the information gathered, AMS is revising the parsley standards to allow percentages for tolerances and defects to be determined by count rather than weight and will remove the unclassified category.

The official grade of a lot of parsley covered by these standards is determined by the procedures set forth in the Regulations Governing Inspection, Certification, and Standards of Fresh Fruits, Vegetables and Other Products (Sec. 51.1 to 51.61).

The revisions to the United States Standards for Grades of Parsley will become effective 30 days after publication of this notice in the **Federal Register**.

Authority: 7 U.S.C. 1621–1627.

Dated: June 14, 2007.

Lloyd C. Day,

Administrator, Agricultural Marketing Service.

[FR Doc. E7–11930 Filed 6–19–07; 8:45 am]

BILLING CODE 3410–02–P

DEPARTMENT OF AGRICULTURE

Federal Crop Insurance Corporation

Funding Opportunity Title: Crop Insurance Education in Targeted States (Targeted States Program)

Announcement Type: Modification—Competitive Cooperative Agreements.This announcement modifies the Request for Application Notice published in the **Federal Register**, March 14, 2007 (Vol. 72, No. 49, Pages 11839–11846). The Dates and Summary portions have been modified.

CFDA Number: 10.458

Dates: Applications are due July 5, 2007.

Summary: The following paragraph has been added to the beginning of the Summary portion of the March 14, 2007, **Federal Register** Notice:The Risk Management Agency (RMA) did not receive valid application packages for the State of Utah under the original Request for Application Notice published in the **Federal Register** on March 14, 2007, for the Crop Insurance Education in Targeted States Program (Targeted States Program). RMA is re-announcing its Funding Opportunity—Request for Applications under the Targeted States Program for the State of Utah. Applicants who previously submitted an application under the March 14, 2007, Targeted States Program Request for Applications Notice for Utah must reapply in accordance with the original Notice published in the **Federal Register** on March 14, 2007. All other portions and sections of the full text Notice remain unchanged.

For Further Information Contact: Applicants and other interested parties are encouraged to contact: Lon Burke, USDA–RMA–RME, phone: 202–720–5265, fax: 202–690–3605, e-mail: *RMA.Risk-Ed@rma.usda.gov.* You may also obtain information regarding this announcement from the RMA Web site at: *http://www.rma.usda.gov/aboutrma/agreements/.*

Signed in Washington, DC, on June 14, 2007.

Eldon Gould,

Manager,Federal Crop Insurance Corporation.

[FR Doc. E7–11898 Filed 6–19–07; 8:45 am]

BILLING CODE 3410–08–P

DEPARTMENT OF AGRICULTURE

Forest Service

Tehama County Resource Advisory Committee

AGENCY: Forest Service, USDA.

ACTION: Notice of meeting.

SUMMARY: The Tehama County Resource Advisory Committee (RAC) will meet in Red Bluff, California. Agenda items to be covered include: (1) Introductions, (2) Member Status, (3) Public Comment, (4) Status of Project Proposals, (5) Recab of Previous Projects, (6) Chairman's Perspective, (7) General Discussion, (8) Next Agenda.

DATES: The meeting will be held on July 12, 2007 from 9 a.m. and end at approximately 12 p.m.

ADDRESSES: The meeting will be held at the Lincoln Street School, Pine Room, 1135 Lincoln Street, Red Bluff, CA. Individuals wishing to speak or propose agenda items must send their names and proposals to Eduardo Olmedo, DFO, 825 N. Humboldt Ave., Willows, CA 95988.

FOR FURTHER INFORMATION CONTACT: Bobbin Gaddini, Committee Coordinator, USDA, Mendocino National Forest, Grindstone Ranger District, P.O. Box 164, Elk Creek, CA 95939. (530) 968–5329; e-mail *ggaddini@fs.fed.us.*

SUPPLEMENTARY INFORMATION: The meeting is open to the public. Committee discussion is limited to Forest Service staff and Committee members. However, persons who wish to bring matters to the attention of the Committee may file written statements with the Committee staff before or after the meeting. Public input sessions will be provided and individuals who made written requests by July 10, 2007 will have the opportunity to address the committee at those sessions.

Dated: June 12, 2007.

Eduardo Olmedo,

Designated Federal Official.

[FR Doc. 07–3015 Filed 6–19–07; 8:45 am]

BILLING CODE 3410–11–M

DEPARTMENT OF AGRICULTURE

Forest Service

Lake County Resource Advisory Committee

AGENCY: Forest Service, USDA.

ACTION: Notice of meeting.

SUMMARY: The Lake County Resource Advisory Committee (RAC) will hold a meeting.

DATES: The meeting will be held on July 19, 2007, from 3:30 p.m. to 5 p.m.

ADDRESSES: The meeting will be held at the Lake County Board of Supervisor's Chambers at 255 North Forbes Street, Lakeport, CA.

FOR FURTHER INFORMATION CONTACT: Debbie McIntosh, Committee Coordinator, USDA, Mendocino National Forest, Upper Lake Ranger District, 10025 Elk Mountain Road, Upper Lake, CA 95485. (707) 275–2361: e-mail *dmcintosh@fs.fed.us.*

SUPPLEMENTARY INFORMATION: Agenda items to be covered include: (1) Roll Call/Establish Quorum; (2) Review Minutes From the August 17, 2006 Meeting; (3) Introduction of New DFO & one prospective member; (4) Project update; (5) Project review and discussion; (6) Recommend projects/Vote on any projects if applicable; (7) Discuss Project Cost Accounting USFS/County of Lake; (8) Set Next Meeting Date; (9) Public Comment Period; Public input opportunity will be provided and individuals will have the opportunity to address the Committee at that time. (10) Adjourn.

Dated: June 10, 2007.

Jim Ruhl

Designated Federal Officer.

[FR Doc. 07–3016 Filed 6–19–07; 8:45 am]

BILLING CODE 3410–11–M

DEPARTMENT OF AGRICULTURE

Forest Service

Trinity County Resource Advisory Committee

AGENCY: Forest Service, USDA.

ACTION: Notice of meeting.

SUMMARY: The Trinity County Resource Advisory Committee (RAC) will meet at the Trinity County Office of Education in Weaverville, California, on June 25, 2007, at 6:30 p.m. The purpose of this meeting is to discuss proposed projects under Title II of the Secure Rural Schools and Community Self-Determination Act of 2000.

DATES: June 25, 2007.

ADDRESSES: The meeting will be held at the Trinity County Office of Education, 201 Memorial Drive, Weaverville, California 96093.

FOR FURTHER INFORMATION CONTACT: Michael R. Odle, Public Affairs Officer and Resource Advisory Committee Coordinator at (530) 226–2494.

SUPPLEMENTARY INFORMATION: The meeting is open to the public. Public input sessions will be provided and individuals will have the opportunity to address the Trinity County Resource Advisory Committee.

Dated: June 14, 2007.

Alan D. Olson,

Ecosystem Management Staff Officer, Shasta-Trinity National Forest.

[FR Doc. 07–3034 Filed 06–19–07; 8:45 am]

BILLING CODE 3410–EC–M

DEPARTMENT OF AGRICULTURE

Forest Service

Shasta County Resource Advisory Committee

AGENCY: Forest Service, USDA.

ACTION: Notice of meeting.

SUMMARY: The Shasta County Resource Advisory Committee (RAC) will meet at the USDA Service Center in Redding, California, on June 28, 2007, at 8:30 a.m. The purpose of this meeting is to discuss proposed projects under Title II of the Secure Rural Schools and Community Self-Determination Act of 2000.

DATES: June 28, 2007.

ADDRESSES: The meeting will be held at the USDA Service Center, 3644 Avtech Parkway, Redding, California 96002.

FOR FURTHER INFORMATION CONTACT: Michael R. Odle, Public Affairs Officer and RAC Coordinator at (530) 226–2494.

SUPPLEMENTARY INFORMATION: The meeting is open to the public. Public input sessions will be provided and individuals will have the opportunity to address the Shasta County Resource Advisory Committee.

Dated: June 14, 2007.

Alan D. Olson,

Ecosystem Management Staff Officer, Shasta-Trinity National Forest.

[FR Doc. 07–3035 Filed 6–19–07; 8:45 am]

BILLING CODE 3410–EC–M

DEPARTMENT OF AGRICULTURE

Rural Housing Service

Funding Opportunity: Section 525 Technical and Supervisory Assistance (TSA) Grants

Announcement Type: Initial notice of Funds Availability (NOFA) inviting applications from qualified organizations for Fiscal Year 2007 funding.

Catalog of Federal Domestic Assistance Number (CFDA): 10.441.

Summary: The Rural Housing Service, an agency under USDA, Rural Development announces it is soliciting competitive applications under its Technical and Supervisory Assistance (TSA) grant program. Grants will be awarded to eligible applicant organizations to conduct programs of technical and supervisory assistance for low-income rural residents to obtain and/or maintain occupancy of adequate housing.

Dates: The deadline for receipt of preapplication proposals by USDA, Rural Development State Offices is the close of business on July 20, 2007. Preapplications received after July 20, 2007 will not be considered for funding. Within 30 days after the closing date, each State Director will forward to the National Office the original preapplication(s) and supporting documents of the selected applicant. State Directors will be advised of the National Office's action on their selected preapplications.

For Further Information Contact: Nica Mathes, Senior Loan Specialist, USDA Rural Development, Single Family Housing Direct Loan Division, Special Programs and New Initiatives Branch, Mail Stop 0783, Room 2206–S, 1400 Independence Avenue, SW., Washington, DC 20250–0783, phone: (202) 205–3656 or (202) 720–1474, e-mail: *nica.mathes@wdc.usda.gov* , or FAX: (202) 720–2232.

SUPPLEMENTARY INFORMATION:

Paperwork Reduction Act

Overview

This notice is published as required by 7 CFR 1944.525(b) and 1944.528, which state that the housing programs Administrator must provide annual notice in the **Federal Register** on the distribution of appropriated TSA funds, the number of preapplications to be submitted to the National Office from the State Offices, the maximum grant amount per project, and the dates governing the review and selection of TSA grant preapplications.

Complete agency regulations for the TSA program are contained in RD Instruction 1944–K, accessible online at *http://www.rurdev.usda.gov/regs*, and in 7 CFR part 1944, subpart K, and are incorporated by reference. Applicants and grantees must comply with 7 CFR parts 3015, 3018, and 3019, as applicable.

Up to $1,000,000 in competitive grants will be awarded to eligible applicants. No single award will exceed $100,000.

In accordance with 7 CFR 1944.525, the Administrator will distribute a portion of the funds to those States with high levels of poverty and substandard housing in rural areas. For this year, we are targeting California and Texas. In

addition, we are targeting states severely impacted by major disasters including Kansas, Louisiana and Mississippi. Up to $500,000 will be targeted to eligible TSA programs in these States. Remaining funds will be available for national competition. No more than one grant per State will be awarded. The Agency will only accept one preapplication per organization for funding consideration.

The State Director may submit multiple preapplications, ranked in order of preference, to the National Office for consideration.

The performance period of grant activities will be two years from the date the grant agreement is executed.

Reimbursement of pre-award costs is not allowed.

To be eligible for a grant, the applicant must be a nonprofit corporation, agency, institution, organization, Indian tribe or other association in accordance with 7 CFR part 16. This also includes faith-based and community organizations. A private nonprofit corporation, which is owned and controlled by private persons or interests, must have local representation from the area being served, be organized and operated by private persons or interests for purposes other than making gains or profits for the corporation, and be legally precluded from distributing any gains or profits to its members. Cost sharing is not required but is encouraged. In the selection of grant recipients, the Agency will consider the extent to which the project will make use of other financial and contribution-in-kind resources for both technical and supervisory assistance and housing development and supporting facilities. Applications and complete program instructions are available at any Area Office listed on the USDA Rural Development Web site at *http:www.rurdev.usda.gov.* Federal grant application forms are available in electronic format at *http://www.whitehouse.gov/omb/grants/grants_forms.html*.

Program Administration

I. Funding Opportunity Description

Under section 525 (a) of the Housing Act of 1949, 42 U.S.C. 1490e (a), Rural Development provides funds to eligible applicants to conduct TSA programs for low-income rural residents to obtain and/or maintain occupancy of adequate housing. Any processing or servicing activity involving authorized assistance to USDA Rural Development employees, members of their families, known close relatives, or business or close personal associates, is subject to the provisions of 7 CFR part 1900, subpart D. Applicants for this assistance are required to identify any known relationship or association with a USDA Rural Development employee. This financial assistance may pay part or all of the cost of developing, conducting, administering, or coordinating effective and comprehensive programs of technical and supervisory assistance which will aid needy low-income individuals and families in benefiting from Federal, State, and local programs in rural areas. USDA Rural Development will provide technical and supervisory grant assistance to applicants without discrimination because of race, color, religion, sex, national origin, age, marital status, or physical or mental disability.

Policy: The policy of USDA Rural Development is to provide technical and supervisory assistance to eligible applicants to do the following:

(1) Provide homeownership and financial counseling to reduce both the potential for delinquency by loan applicants and the level of payment delinquency by present Rural Development housing loan borrowers; and

(2) Facilitate the delivery of housing programs to serve the most needy low-income families in rural areas of greatest need for housing.

Rural Development intends to fund projects which include counseling and delivery of housing programs.

State Directors are given a strong role in the selection of grantees so this program can complement Rural Development's policies of targeting USDA Rural Development resources to areas of greatest need within their States.

Objectives: The objectives of the TSA Grant Program are to assist low-income rural families in obtaining adequate housing to meet their family's needs and/or to provide the necessary guidance to promote their continued occupancy of already adequate housing. These objectives will be accomplished through the establishment or support of housing delivery and counseling projects run by eligible applicants. This program is intended to make use of any available housing program which provides the low-income rural resident access to adequate rental properties or homeownership.

Definitions: References to Local, Area, State, National and Rural Development St. Louis Offices and to State Director, and Administrator refer to USDA Rural Development offices and officials and should be read as prefaced by USDA Rural Development. Terms used here have the following meanings:

Adequate housing. A housing unit of adequate size and design to meet the specific needs of low-income families and the requirements governing the particular housing program providing the services or financial assistance.

Applicant or grantee. Any eligible organization which applies for or receives TSA funds under a grant agreement.

Grant agreement. The contract between Rural Development and the applicant which sets forth the terms and conditions under which TSA funds will be made available.

Low-income family. Any household, including those with one member, whose adjusted annual income, computed in accordance with 7 CFR 3550.54(c), does not exceed the Housing and Urban Development (HUD) established low-income limit (generally 80 percent of the median income adjusted for household size) for the county or Metropolitan Statistical Area where the property is or will be located.

Organization. Public or private nonprofit corporations, agencies, institutions, Indian tribes and other associations. A private nonprofit corporation, which is owned and controlled by private persons or interests, must have local representation from the area being served, be organized and operated by private persons or interests for purposes other than making gains or profits for the corporation, and be legally precluded from distributing any gains or profits to its members. Faith-based organizations may meet these requirements.

Rural area. The definition in 7 CFR 3550.10 applies.

Supervisory assistance. Any type of assistance to low-income families which will assist those families in meeting the eligibility requirements for, or the financial and managerial responsibilities of, homeownership or tenancy in an adequate housing unit. Such assistance must include, but is not limited to, the following activities:

(1) Assisting individual USDA Rural Development borrowers with financial problems to overcome delinquency and/or prevent foreclosure and assisting new low-income applicants avoid financial problems through:

(i) Financial and budget counseling including advice on debt levels, credit purchases, consumer and cost awareness, debt adjustment procedures, and availability of other financial counseling services;

(ii) Monitoring payment of taxes and insurance;

(iii) Home maintenance and management; and

(iv) Other counseling based on the needs of the low-income families.

(2) Contacting and assisting low-income families in need of adequate housing by:

(i) Implementing an organized outreach program using available media and personal contacts;

(ii) Explaining available housing programs and alternatives to increase the awareness of low-income families and to educate the community as to the benefits which can accrue from improved housing;

(iii) Assisting low-income families to locate adequate housing;

(iv) Providing construction supervision, training, and guidance to low-income families not involved in Mutual Self-Help programs who are otherwise being assisted by the TSA project;

(v) Organizing local public or private nonprofit groups willing to provide adequate housing for low-income families; and

(vi) Providing assistance to families and organizations in processing housing loan and/or grant applications generated by the TSA program, including developing and packaging such applications for new construction, rehabilitation, or repair to serve low-income families.

Technical assistance. Any specific expertise necessary to carry out housing efforts by or for low-income families to improve the quantity and/or quality of housing available to meet their needs. Such assistance should be specifically related to the supervisory assistance provided by the project, and may include, as appropriate, the following activities:

(1) Develop, or assist eligible applicants to develop, multi-housing loan and/or grant applications for new construction, rehabilitation, or repair to serve low-income families.

(2) Market surveys, engineering studies, cost estimates, and feasibility studies related to applications for housing assistance to meet the specific needs of the low-income families assisted under the TSA program.

Grant purposes: Grant funds are to be used for a housing delivery system and counseling program to include a comprehensive program of technical and supervisory assistance as set forth in the grant agreement and any other special conditions as required by Rural Development. Uses of grant funds may include, but are not limited to:

(1) The development and implementation of a program of technical and supervisory assistance as defined in 7 CFR 1944.506 (h) and (i).

(2) Payment of reasonable salaries of professional, technical, and clerical staff actively assisting in the delivery of the TSA project.

(3) Payment of necessary and reasonable office expenses such as office supplies and office rental, office utilities, telephone services, and office equipment rental.

(4) Payment of necessary and reasonable administrative costs such as workers' compensation, liability insurance, audit reports, travel to and attendance at Rural Development approved training sessions, and the employer's share of Social Security and health benefits. Payments to private retirement funds are prohibited unless prior written authorization is obtained from the Administrator.

(5) Payment of reasonable fees for necessary training of grantee personnel. This may include the cost of travel and per diem to attend regional training sessions when authorized by the State Director.

(6) Other reasonable travel and miscellaneous expenses necessary to accomplish the objectives of the specific TSA grant which were anticipated in the individual TSA grant proposal and which have been included as eligible expenses at the time of grant approval.

Ineligible Activities: Grant funds may not be used for:

(1) Acquisition, construction, repair, or rehabilitation of structures or acquisition of land, vehicles, or equipment.

(2) Replacement of, or substitution for, any financial support which would be available from any other source.

(3) Duplication of current services in conflict with the requirements of 7 CFR 1944.514 (c).

(4) Hiring personnel to perform construction.

(5) Buying property of any kind from families receiving technical or supervisory assistance from the grantee under the terms of the TSA grant.

(6) Paying for or reimbursing the grantee for any expenses or debts incurred before USDA Rural Development executes the grant agreement.

(7) Paying any debts, expenses, or costs which should be the responsibility of the individual families receiving technical and supervisory assistance.

(8) Any type of political activities.

(9) Other costs including contributions and donations, entertainment, fines and penalties, interest and other financial costs, legislative expenses and any excess of cost from other grant agreements.

Advice and assistance may be obtained from the National Office where ineligible costs are proposed as part of the TSA project or where a proposed cost appears ineligible.The grantee may not charge fees or accept compensation or gratuities from TSA recipients for the grantee's assistance under this program.

Comprehensive TSA programs include: Outreach to the community and education of low-income families as to the benefits which can accrue from improved housing, including: counseling on affording a home, obtaining a housing loan, and understanding predatory lending practices; loan packaging and assistance in the homebuying process, including reviewing client credit history, screening for housing loan eligibility for USDA Rural Development Section 502 loans or similar loans, assisting clients to complete applications, advising clients on home selection and matters related to home financing, and providing post-purchase counseling; and, assisting individual USDA Rural Development borrowers with financial problems to overcome delinquency and/or prevent foreclosure.

II. Award Information

Up to $1,000,000 in competitive grants will be awarded to eligible applicants. It is estimated that 10 grants will be awarded with these funds.

TSA projects will be funded under a Grant Agreement for two years commencing on the date of execution of the Agreement by the State Director. The Grant Agreement is contained as Exhibit A to RD Instruction 1944–K (available in any USDA Rural Development office).

Performance of the grant program should begin within 60 days of award notification.Applications for renewal of existing TSA programs are eligible to compete with applications for new awards.

III. Eligibility Information

Grants provide funds to eligible applicant organizations to conduct TSA for low-income rural residents to obtain and/or maintain occupancy of adequate housing.

Applicant eligibility. To be eligible to receive a grant, the applicant must:

(1) Be an organization as defined in 7 CFR 1944.506 (e).

(2) Have the financial, legal, administrative, and operational capacity to assume and carry out the responsibilities imposed by the grant agreement. To meet this requirement of actual capacity, it must either:

(i) Have necessary background and experience with proven ability to perform responsibly in the field of low-income rural housing development and

counseling, or other business management or administrative experience which indicates an ability to provide responsible technical and supervisory assistance; or

(ii) Be assisted by an organization which has such background experience and ability and which agrees in writing that it will provide, without charge, the assistance the applicant will need to carry out its responsibilities.

(3) Legally obligate itself to administer TSA funds, provide an adequate accounting of the expenditure of such funds, and comply with the grant agreement and applicable USDA Rural Development regulations;

(4) Demonstrate an understanding of the needs of low-income rural families;

(5) Have the ability and willingness to work within established guidelines; and

(6) If the applicant is engaged in or plans to become engaged in any other activities, it must be able to provide sufficient evidence and documentation that it has adequate resources, including financial resources, to carry on any other programs or activities to which it is committed without jeopardizing the success and effectiveness of its TSA project.

Cost sharing or matching. There is no cost sharing or matching requirement. However, applicants who submit evidence of cost sharing will receive points under *Selection Criteria,* paragraph V.(2)(v).

Other administrative requirements. The following policies and regulations apply to grants made under this program:

(1) The policies and regulations contained in 7 CFR part 1901, subpart E regarding equal opportunity requirements.

(2) The policies and regulations contained in 7 CFR part 1901, subpart F regarding historical and archaeological properties.

(3) The policies and regulations contained in 7 CFR part 1940, subpart G regarding Environmental Assessments.

IV. Application and Submission Information

The Federal government requires that all applicants for Federal grants and cooperative agreements with the exception of individuals other than sole proprietors, have a Dun & Bradstreet Data Universal Numbering System (DUNS) number. The Federal government will use the DUNS number to better identify related organizations that are receiving funding under grants and cooperative agreements, and to provide consistent name and address data for electronic grant application systems. More information on this policy and how to obtain a DUNS number is available at *http://www.whitehouse.gov/omb/fedreg/062703_grant_identifier.pdf* and *http://www.dnb.com*.

Preapplication submission.

(1) All applicants will file an original and two copies of the preapplication, including supporting information detailed below, with the appropriate State Office serving the proposed TSA area. Preapplications will consist of: Standard Form 424 (Form SF–424), ''Application for Federal Assistance;'' Form SF–424A, ''Budget Information—Non-Construction Programs;'' Form SF–424B, ''Assurances—Non-Construction Programs;'' and supporting documentation as detailed below. The applicant organization's DUNS number must be provided.

If the TSA area encompasses more than one State Office, the preapplication will be filed at the State Office which serves the area in which the grantee will provide the greatest amount of TSA efforts. Additional informational copies of the preapplication will be sent by the applicant to the other affected State Office(s) clearly marked ''For Information Purposes Only.'' Applications for multi-state projects must designate the portion of funds and services to be provided to each state.

Where to file. Preapplication packages must be received prior to the deadline at the appropriate USDA Rural Development State Office. State Office addresses and contacts are:

Alabama State Office, Suite 601, Sterling Centre, 4121 Carmichael Road, Montgomery, AL 36106–3683, (334) 279–3400, TDD (334) 279–3618, Vann L. McCloud

Alaska State Office, 800 West Evergreen, Suite 201, Palmer, AK 99645, (907) 761–7740, TDD (907) 761–8905, Deborah Davis

Arizona State Office, Phoenix Courthouse and Federal Building, 230 North First Avenue, Suite 206, Phoenix, AZ 85003–1706, (602) 280–8764, TDD (602) 280–8706, Ernie Wetherbee

Arkansas State Office, 700 W. Capitol Ave., Rm. 3416, Little Rock, AR 72201–3225, (501) 301–3235, TDD (501) 301–3063, Lawrence McCullough

California State Office, 430 G Street, #4169, Davis, CA 95616–4169, (530) 792–5816, TDD (530) 792–5848, Bob Anderson

Colorado State Office, 655 Parfet Street, Room E100, Lakewood, CO 80215, (720) 544–2903, TDD (800) 659–2656, Jamie Spakow

Connecticut, Served by Massachusetts State Office

Delaware & Maryland State Office,1221 College Park Drive, Suite 200, Dover, DE 19904–8724, (302) 857–3600, TDD (302) 857–3585, Pat Baker

Florida & Virgin Islands State Office, 4440 NW 25th Place, Gainesville, FL 32606–6563, (352) 338–3436, TDD (352) 338–3499, Daryl Cooper

Georgia State Office, Stephens Federal Building, 355 E. Hancock Avenue, Athens, GA 30601–2768, (706) 546–2169, TDD (706) 546–2034, Douglas Canup

Guam, Served by Hawaii State Office

Hawaii State Office, (Services all Hawaii, American Samoa and Western Pacific), Room 311, Federal Building, 154 Waianuenue Avenue, Hilo, HI 96720, (808) 933–8308, TDD (808) 933–8321, Stephanie Taketa, Acting

Idaho State Office, Suite A1, 9173 West Barnes Dr., Boise, ID 83709, (208) 378–5627, TDD (208) 378–5644, Roni Atkins

Illinois State Office, 2118 West Park Court, Suite A, Champaign, IL 61821–2986, (217) 403–6222, TDD (217) 403–6240, Barry L. Ramsey

Indiana State Office, 5975 Lakeside Boulevard, Indianapolis, IN 46278, (317) 290–3096, TDD (317) 290–3343, Paul Neumann

Iowa State Office, 210 Walnut Street, Room 873, Des Moines, IA 50309, (515) 284–4666, TDD (515) 284–4858, Bruce McGuire

Kansas State Office, 1303 SW First American Place, Suite 100, Topeka, KS 66604–4040, (785) 271–2718, TDD (785) 271–2767, Tim Rogers

Kentucky State Office, 771 Corporate Drive, Suite 200, Lexington, KY 40503, (859) 224–7322, TDD (859) 224–7422, Denver Parks

Louisiana State Office, 3727 Government Street, Alexandria, LA 71302, (318) 473–7920, TDD (318) 473–7655, Debbie Redfearn

Maine State Office, 967 Illinois Ave., Suite 4, PO Box 405, Bangor, ME 04402–0405, (207) 990–9110, TDD (207) 942–7331, Dale Holmes

Maryland, Served by Delaware State Office

Massachusetts, Connecticut, & Rhode Island State Office, 451 West Street, Suite 2, Amherst, MA 01002, (413) 253–4333, TDD (413) 253–4590, Don Colburn

Michigan State Office, 3001 Coolidge Road, Suite 200, East Lansing, MI 48823, (517) 324–5192, TDD (517) 337–6795, Rick Annis

Minnesota State Office, 375 Jackson Street Building, Suite 410, St. Paul, MN 55101, (651) 602–7792, TDD (651) 602–7830, Lance Larson

Mississippi State Office, Federal Building, Suite 831, 100 W. Capitol Street, Jackson, MS 39269, (601) 965–4325, TDD (601) 965–5850, John Jones
Missouri State Office, 601 Business Loop 70 West, Parkade Center, Suite 235, Columbia, MO 65203, (573) 876–9301, TDD (573) 876–9480, Randy Griffith
Montana State Office, Unit 1, Suite B, 900 Technology Blvd., Bozeman, MT 59715, (406) 585–2515, TDD (406) 585–2562, Deborah Chorlton
Nebraska State Office, Federal Building, Room 152, 100 Centennial Mall N, Lincoln, NE 68508, (402) 437–5567, TDD (402) 437–5093, Byron Fischer
Nevada State Office, 1390 South Curry Street, Carson City, NV 89703–9910, (775) 887–1222, TDD (775) 885–0633, William Brewer
New Hampshire State Office, Served by Vermont State Office
New Jersey State Office, 5th Floor North, Suite 500, 8000 Midlantic Drive, Mt. Laurel, NJ 08054, (856) 787–7730, TDD (856) 787–7784, George Hyatt, Jr.
New Mexico State Office, 6200 Jefferson St., NE, Room 255, Albuquerque, NM 87109, (505) 761–4944, TDD (505) 761–4938, Art Garcia
New York State Office, The Galleries of Syracuse,441 S. Salina Street, Suite 357 5th Floor, Syracuse, NY 13202, (315) 477–6417, TDD (315) 477–6447, Jennifer Jackson
North Carolina State Office, 4405 Bland Road, Suite 260, Raleigh, NC 27609, (919) 873–2060, TDD (919) 873–2003, Melchior Ellis
North Dakota State Office, Federal Building, Room 208, 220 East Rosser, PO Box 1737, Bismarck, ND 58502, (701) 530–2044, TDD (701) 530–2113, Jenice Schall, Acting
Ohio State Office, Federal Building, Room 507, 200 North High Street, Columbus, OH 43215–2477, (614) 255–2401, TDD (614) 255–2554, Gerald Arnott
Oklahoma State Office, 100 USDA, Suite 108, Stillwater, OK 74074–2654, (405) 742–1070, TDD (405) 742–1007, Brian Wiles
Oregon State Office, 1201 NE Lloyd Blvd., Suite 801, Portland, OR 97232–1274, (503) 414–3335, TDD (503) 414–3387, Sharon Shaffer
Pennsylvania State Office, One Credit Union Place, Suite 330, Harrisburg, PA 17110–2996, (717) 237–2279, TDD (717) 237–2261, Frank Wetherhold
Puerto Rico State Office, IBM Building, Suite 601, Munoz Rivera Ave. #654, San Juan, PR 00918, (787) 766–5095, TDD (787) 766–5332, Pedro Gomez
Rhode Island, Served by Massachusetts State Office
South Carolina State Office, Strom Thurmond Federal Building, 1835 Assembly Street, Room 1007, Columbia, SC 29201, (803) 253–3655, TDD (803) 765–5697, Herbert R. Koon, Jr.
South Dakota State Office, Federal Building, Room 210, 200 Fourth Street, SW, Huron, SD 57350, (605) 352–1132, TDD (605) 352–1147, Roger Hazuka
Tennessee State Office, Suite 300, 3322 West End Avenue, Nashville, TN 37203–1084, (615) 783–1375, TDD (615) 783–1397, Donald L. Harris
Texas State Office, Federal Building, Suite 102, 101 South Main, Temple, TX 76501, (254) 742–9765, TDD (254) 742–9712, Scooter Brockette
Utah State Office, Wallace F. Bennett Federal Building, 125 S. State Street, Room 4311, Salt Lake City, UT 84138, (801) 524–4323, TDD (801) 524–3309, Dave Brown
Vermont & New Hampshire State Office, City Center, 3rd Floor, 89 Main Street, Montpelier, VT 05602, (802) 828–6010, TDD (802) 223–6365, Robert McDonald
Virgin Islands, Served by Florida State Office
Virginia State Office, Culpeper Building, Suite 238, 1606 Santa Rosa Road, Richmond, VA 23229, (804) 287–1603, TDD (804) 287–1753, James Reid
Washington State Office, 1835 Black Lake Blvd., SW, Suite B, Olympia, WA 98512, (360) 704–7731, TDD (360) 704–7742, Robert Lund, Acting
Western Pacific Territories, Served by Hawaii State Office
West Virginia State Office, Federal Building, 75 High Street, Room 320, Morgantown, WV 26505–7500, (304) 284–4860, TDD (304) 284–4836, Dianne Goff Crysler
Wisconsin State Office, 4949 Kirschling Court, Stevens Point, WI 54481, (715) 345–7615, TDD (715) 345–7614, Peter Kohnen
Wyoming State Office, 100 East B, Federal Building, Room 1005, PO Box 820, Casper, WY 82602, (307) 233–6715, TDD (307) 261–6333, Alan Brooks

(2) All preapplications shall be accompanied by the following information which will be used to determine the applicant's eligibility to undertake a TSA program and to determine whether the applicant might be funded:

(i) A narrative presentation of the applicant's proposed TSA program, including:

(A) The technical and supervisory assistance to be provided;

(B) The time schedule for implementing the program;

(C) The staffing pattern to execute the program and salary range for each position, existing and proposed;

(D) The estimated number of low-income and low-income minority families the applicant will assist in obtaining affordable adequate housing;

(E) The estimated number of USDA Rural Development borrowers who are delinquent or being foreclosed that the applicant will assist in resolving their financial problems relating to their delinquency;

(F) The estimated number of households which will be assisted in obtaining adequate housing in the TSA area through new construction and/or rehabilitation;

(G) Annual estimated budget for each of the two years based on the financial needs to accomplish the objectives outlined in the proposal. The budget should include proposed direct and indirect costs for personnel, fringe benefits, travel, equipment, supplies, contracts, and other costs categories, detailing those costs for which the grantee proposes to use the TSA grant separately from non-TSA resources, if any;

(H) The accounting system (cash or accrual) to be used;

(I) The method of evaluation proposed to be used by the applicant to determine the effectiveness of its program;

(J) The sources and estimated amounts of other financial resources to be obtained and used by the applicant for both TSA activities and housing development and/or supporting facilities; and,

(K) Any other information necessary to explain the manner of delivering the TSA assistance proposed.

(ii) Complete information about the applicant's previous experience and capacity to carry out the objectives of the proposed TSA program;

(iii) Evidence of the applicant's legal existence, including, in the case of a private nonprofit organization, a copy of, or an accurate reference to, the specific provisions of State law under which the applicant is organized; a certified copy of the applicant's Articles of Incorporation and Bylaws or other evidence of corporate existence; certificate of incorporation for other than public bodies; evidence of good standing from the State when the corporation has been in existence one year or more; the names and addresses of the applicant's members, directors, and officers; and, if another organization is a member of the applicant-organization, its name, address, and principal business.

(iv) For a private nonprofit entity, a current financial statement dated and signed by an authorized officer of the entity showing the amounts and specific nature of assets and liabilities together with information on the repayment schedule and status of any debt(s) owed by the applicant. If the applicant is an organization being assisted by another private nonprofit organization, the same type of financial statement should also be provided by that organization.

(v) A brief narrative statement which includes information about the area to be served and the need for improved housing (including both percentage and actual number of both low-income and low-income minority families and substandard housing), the need for the type of technical and supervisory assistance being proposed, the method of evaluation to be used by the applicant in determining the effectiveness of its efforts (as related to paragraph (a)(2)(i) of this section), and any other information necessary to specifically address the selection criteria in 7 CFR 1944.529.

(vi) A list of other activities the applicant is engaged in and expects to continue and a statement as to any other funding and whether it will have sufficient funds to assure continued operation of the other activities for at least the period of the TSA grant agreement.

(3) An applicant should submit written statements from the county, parish, or township governments of the area affected that the project is beneficial and does not duplicate current activities. If the local governmental units will not provide such statements, the applicant will prepare and include with its preapplication a summary of its analysis of alternatives considered under 7 CFR 1944.514(c). However, Indian nonprofit organization applicants should obtain the written concurrence of the Tribal governing body in lieu of the concurrence of the county governments.

(4) USDA Rural Development will deal only with authorized representatives designated by the applicant. The authorized representatives must have no pecuniary interest in any of the following as they would relate in any way to the TSA grant: the award of any engineering, architectural, management, administration, or construction contracts; purchase of the furnishings, fixtures or equipment; or purchase and/or development of land. (**Note:** USDA Rural Development has designated the Area Office as the primary point of contact for all matters relating to the TSA program and as the office responsible for the administration of approved TSA projects.)

Intergovernmental Review. This program is subject to the provisions of Executive Order 12372, which requires intergovernmental consultation with State and local officials.

V. Application Review Information

Within 30 days of the closing date for receipt of preapplications, the State Director will forward to the National Office the original preapplication(s) and supporting documents of the selected applicant(s), including any comments received in accordance with 7 CFR part 3015, subpart V, ''Intergovernmental Review of Agriculture Programs and Activities,'' (See RD Instruction 1940–J, available in any USDA Rural Development Office) and the comments and recommendations of the Local Office(s), Area Office(s), and the State Office. The State Office may submit multiple preapplications, ranked in order of preference, to the National Office for consideration.

Concurrently the State Office will send a copy of the selected applicant's Form SF–424 and relevant documents to the Regional Office of the General Counsel (OGC) requesting a legal determination be made of the applicant's legal existence and authority to conduct the proposed program of technical and supervisory assistance.

The State Office will notify other applicants that their preapplications were not selected and advise them of their appeal rights under 7 CFR part 11.

Selection Criteria

(1) Proposals must meet the following criteria:

(i) Provide a program of supervisory assistance as defined in 7 CFR 1944.506(h); and,

(ii) Serve areas with a concentration of substandard housing and low-income and low-income minority households.

(2) For proposals meeting the requirements listed in paragraph (1) above, USDA Rural Development will use the weighted criteria in this paragraph in the selection of grant recipients. Each preapplication and its accompanying narrative will be evaluated and the applicant's proposal will be numerically rated on each criterion. The highest-ranking proposals will be selected for funding according to award information, described above. The criteria considered, the method of measurement, and the points to be awarded are as follows:

(i) The extent to which the program serves areas with concentrations of Rural Development single family housing loan borrowers who are delinquent in their housing loan payments and/or threatened with foreclosure. Measured by whether the applicant proposes to offer delinquency counseling services for Rural Development borrowers. Program will offer delinquency counseling services: 5 points.

(ii) The capability and past performance demonstrated by the applicant in administering its programs, the effectiveness of current efforts by the applicant to assist low-income and low-income minority families in obtaining adequate housing, the adequacy of records and practices (including personnel procedures and practices) that will be established and maintained by the applicant during the term of the agreement. Measured on whether the applicant organization or members of the applicant organization's staff conducting the proposed TSA program have, in the last two years, successfully conducted a TSA or similar program to assist low-income families in becoming successful homeowners. Have conducted a similar program, not TSA: 5 points; OR, have conducted a TSA program, 10 points.

(iii) The narrative presentation of the applicant's proposed TSA program. This criterion will be used to evaluate the proposed TSA program and its implementation. This section should describe the technical and supervisory assistance to be provided, the anticipated capacity of the applicant to implement the proposed time schedule for starting and completing the TSA program and each phase thereof, the extent to which the proposed staff and salary ranges will meet the objective of the program including, but not limited to: the ratio of personnel to be hired by the applicant to the cost of the project, the estimated number of low-income and low-income minority families that will obtain housing, the estimated number of Rural Development borrowers that will obtain delinquency counseling, and the estimated number of households that will be assisted in obtaining adequate housing in the TSA area through new construction and/or rehabilitation. Up to 50 points may be assigned.

(iv) The extent to which the program will provide or increase the delivery of housing resources to low-income and low-income minority families who are not currently occupying adequate housing in the areas.

(A) Measured by the county Poverty Rate, as reported in Census 2000 Summary File 3 (SF 3) Report GCT–P14, ''Income and Poverty in 1999:2000.'' This information may be obtained on the Internet from the U.S. Census

Bureau Web site, ''American Fact Finder,'' at *factfinder.census.gov.*

(*1*) 25.1% or higher: 30 points.

(*2*) 14.7% to 25.0%: A total of 2.86 points, rounded to the nearest whole number, for each percentage point above 14.6%.

(*3*) 14.6% or less: 0 points.

Example: According to Census 2000, the service area Poverty Rate is 18.0 percent. This is 3.4 points above the National Non-Metropolitan Area Average of 14.6 percent. This proposal would be scored with 10 points ($3.4 \times 2.86 = 9.7$); and

(B) Measured by the degree of deficient housing, based on the combination of the county's percentage of housing units lacking complete plumbing facilities plus the percentage of housing units lacking complete kitchen facilities (referred to as deficient housing factor), as reported in Census 2000 SF 3 Report GCT–H7, ''Structural and Facility Characteristics of All Housing Units: 2000.'' This information may be obtained on the Internet from the U.S. Census Bureau Web site, ''American Fact Finder,'' at *factfinder.census.gov.*

(*1*) Deficient housing factor 13.0 or greater: 30 points.

(*2*) Factor 5.1 to 13.0: A total of 3.75 points, rounded to the nearest whole number, for each point above 5.0.

(*3*) Factor 5.0 or lower: 0 points.

Example: Of the total housing units in the service area, 5.0 percent lack complete plumbing and 4.5 percent lack complete kitchen facilities, according to Census 2000. Adding these two percentages provides a 'deficient housing index' of 9.5. This is 4.5 points above the National Non-Metropolitan Area Average of 5.0. This would result in a score of 17 points ($9.5 - 5.0 = 4.5 \times 3.75 = 16.875$).

(C) For programs serving multi-county areas, scoring will be determined based upon the combined totals for the counties entire service area. County data (not smaller areas) will be used for evaluation.

(v) The extent to which the program will make use of other financial and contribution-in-kind resources for both technical and supervisory assistance and housing development and supporting facilities. Scoring will be based on the amount of financial assistance from non-Federal sources compared to the applicant's grant request for financial assistance for the project. The applicant will receive points as follows:

(A) 5–25%—5 points

(B) Greater than 25% but equal to or less than 50%—10 points

(C) Greater than 50%—15 points

(vi) The extent to which the project will be cost effective. The cost, both direct and indirect, per person benefiting from the program will be measured by the proposed total number of low-income participants who obtain suitable housing within the period of the grant as a result of participation in the comprehensive TSA program, compared to the amount of the TSA grant. Scoring will be based on the TSA grant funds expended per participant who purchases suitable housing.

(A) $1,000 or less—10 points

(B) Greater than $1,000 but equal to or less than $1,500—5 points

(C) More than $1,500—0 points

Example: The applicant organization's program of homebuyer training and loan packaging proposes to produce 60 homeowners during the two-year grant. Funding for the program includes a $75,000 TSA grant. The TSA cost per homeowner produced is $75,000 / 60 = $1,250. Therefore, 5 points would be given.

(vii) The extent to which the program is effective in providing expected benefits to low-income families. Measured by the proposed total number of low-income participants who obtain suitable housing within the period of the grant as a result of participation in the comprehensive TSA program. More than 25 but less than 50 new homeowners: 5 points, OR more than 50 new homeowners: 10 points.

(viii) The narrative statement demonstrates the need for the TSA program in the proposed area. This section should describe the area to be served and the need for improved housing, the need for the technical and supervisory assistance proposed, and the method of determining the proposed program's effectiveness. Up to 20 points may be assigned.

(ix) The services the applicant will provide are not presently available in the proposed service area to assist low-income families in obtaining or maintaining occupancy of adequate housing and the extent of duplication of technical and supervisory assistance activities currently provided for low-income families. Measured by comments received. Proposed services not duplicated in the area: 10 points.

(x) The extent of citizen and local government participation and involvement in the development of the preapplication and project and coordination with other Federal, State or local technical and/or supervisory assistance programs. Measured by letter(s) or similar documentation from local government officials, businesses and individuals detailing participation and coordination in the project by groups other than the applicant. Letters of support from local or State government entities stating the project is beneficial and non-duplicative: 5 points.

VI. Award Administration Information

Upon notification that the applicant has been tentatively selected for funding based on its preapplication, the State Office will notify the applicant and provide instructions for preparation of a formal application. The applicant will submit all completed forms required for a formal application and whatever additional needed information that is requested to the Area Office within 30 days.

The Area Office will assemble a formal application docket, which will include the following:

(1) Form SF–424 and the information submitted in accordance with 7 CFR 1944.526(a)(2) (preapplication package);

(2) Any comments received in accordance with 7 CFR part 3015, subpart V, ''Intergovernmental Review of Department of Agriculture Programs and Activities.'' See RD Instruction 1940–J (available in any USDA Rural Development Office).

(3) OGC legal determination made pursuant to 7 CFR 1944.526(c)(3).

(4) Grant Agreement.

(5) Form RD 1940–1, ''Request for Obligation of Funds.''

(6) Form RD 400–1, ''Equal Opportunity Agreement.''

(7) Form RD 400–4, ''Nondiscrimination Agreement.''

(8) Form AD–1047, ''Certification Regarding Debarment, Suspension and Other Responsibility Matters—Primary Covered Transactions.''

(9) Form AD–1049, ''Certification Regarding Drug-Free Workplace Requirements (Grants), Alternative I—For Grantees Other Than Individuals.''

(10) Form RD 1940–20, ''Request for Environmental Information.''

(11) Form RD 1940–22, ''Environmental Checklist for Categorical Exclusions,'' Form RD 1940–21, ''Environmental Assessment for Class I Actions'' or Exhibit G of 7 CFR part 1940, subpart G entitled, ''Environmental Assessment for Class II Actions.''

(12) The historical and archaeological assessment.

(13) The detailed budget for the agreement period based upon the needs outlined in the proposal and recommendations by USDA Rural Development.

(14) Verification of Debarment Listing check and Federal Debt Listing check.

(15) Form RD 2006–38, ''Civil Rights Impact Analysis.''

Reporting requirements. Form SF–269, ''Financial Status Report,'' and a project performance report will be required of all grantees on a quarterly basis. All grantees shall submit an original and two copies of these reports to the Area Office. The project performance reports will be submitted not later than January 15, April 15, July 15, and October 15 of each year.

As part of the grantee's preapplication submission required by 7 CFR 1944.526(a)(2)(i), the grantee established the objectives of its TSA program including the estimated number of low-income families to be assisted by the TSA program and its method of evaluation to determine the effectiveness of its program. The project performance report should relate the activities during the report period to the project's objectives and analyze the effectiveness of the program. The grantee will complete a final Form SF–269 and a final performance report upon termination or expiration of the grant agreement.

Grant monitoring. Each grant will be monitored by USDA Rural Development to ensure that the grantee is complying with the terms of the grant and that the TSA project activity is completed as approved. Ordinarily, this will involve a review of quarterly and final reports by USDA Rural Development and review by the appropriate Area Office.

Additional grants. An additional grant may be made to an applicant that has previously received a TSA grant and substantially achieved the goals established for the previous grant by submitting a new proposal for TSA funds. The additional grant application will be processed as if it were an initial application.

Management assistance. The Area Office will see that each TSA grantee receives management assistance to help achieve a successful program.

(1) TSA employees who will be contacting and assisting families will receive training in packaging single family housing and Rural Rental Housing loans when, or very shortly after, they are hired so that they can work effectively.

(2) TSA employees who will provide counseling, outreach, and other technical and supervisory assistance will receive training on USDA Rural Development policies, procedures, and requirements appropriate to their positions and the type of assistance the grantee will provide at the outset of the grant.

(3) Training will be provided by USDA Rural Development employees and/or outside sources approved by USDA Rural Development when the technical and supervisory assistance involves rural housing programs other than Rural Development programs. Appropriate training of TSA employees should be anticipated during the planning stages of the grant and the reasonable cost of such training included in the budget.

(4) The Area Office, in cooperation with the appropriate Local Office(s), should coordinate the management assistance given to the TSA grantee in a manner which is timely and effective. This will require periodic meetings with the grantee to discuss problems being encountered and offer assistance in solving these problems; to discuss the budget, the effectiveness of the grant, and any other unusual circumstances affecting delivery of the proposed TSA services; to keep the grantee aware of procedural and policy changes, availability of funds, etc.; and to discuss any other matters affecting the availability of housing opportunities for low-income families.

(5) The Area and/or Local Office will advise the grantee of the options available to bring the delinquent borrowers' accounts current and advise the grantee that the appropriate approval authority for any resolution of the delinquent accounts and all other authority currently available to remedy delinquent accounts.

Grant evaluation, closeout, suspension, and termination. Grant evaluation will be an ongoing activity performed by both the grantee and USDA Rural Development. The grantee will perform self-evaluations by preparing periodic project performance reports in accordance with 7 CFR 1944.541. USDA Rural Development will also review all reports prepared and submitted by the grantee in accordance with the grant agreement and 7 CFR part 1944, subpart K.

Within forty-five (45) days after the grant ending date, the grantee will complete closeout procedures as specified in the grant agreement.

The grant can also be terminated before the grant ending date for the causes specified in the grant agreement. No further grant funds will be disbursed when grant suspension or termination procedures have been initiated in accordance with the grant agreement.

VII. Agency Contacts

Nica Mathes, Senior Loan Specialist, USDA Rural Development, Single Family Housing Direct Loan Division, Special Programs and New Initiatives Branch, Mail Stop 0783, Room 2206–S, 1400 Independence Avenue, SW., Washington, DC 20250–0783, phone: (202) 205–3656 or (202) 720–1474, e-mail: *nica.mathes@wdc.usda.gov,* or FAX: (202) 720–2232.

VIII. Other Information

Information about TSA grants and other Rural Development housing programs can be obtained at the USDA Rural Development website at *http://www.rurdev.usda.gov.* Questions can also be sent by e-mail to *agsec@usda.gov.*

Nondiscrimination Statement

''The U.S. Department of Agriculture (USDA) prohibits discrimination in all its programs and activities on the basis of race, color, national origin, age, disability, and where applicable, sex, marital status, familial status, parental status, religion, sexual orientation, genetic information, political beliefs, reprisal, or because all or part of an individual's income is derived from any public assistance program. (Not all prohibited bases apply to all programs.) Persons with disabilities who require alternative means for communication of program information (Braille, large print, audiotape, etc.) should contact USDA's TARGET Center at (202) 720–2600 (voice and TDD).

To file a complaint of discrimination write to USDA, Director, Office of Civil Rights, 1400 Independence Avenue, SW., Washington, DC 20250–9410 or call (800) 795–3272 (voice) or (202) 720–6382 (TDD). USDA is an equal opportunity provider, employer, and lender.''

Dated: May 30, 2007.

Russell T. Davis,

Administrator, Rural Housing Service.

[FR Doc. E7–11888 Filed 6–19–07; 8:45 am]

BILLING CODE 3410–XV–P

DEPARTMENT OF COMMERCE

Foreign–Trade Zones Board

[Order No. 1513]

Approval of Request For Manufacturing Authority (Vacuum Cleaner Products), Foreign–Trade Zone 68, Electrolux Home Care Products Ltd.

Pursuant to its authority under the Foreign–Trade Zones Act of June 18, 1934, as amended (19 U.S.C. 81a–81u), the Foreign–Trade Zones Board (the Board) adopts the following Order:

WHEREAS, the City of El Paso, grantee of Foreign–Trade Zone (FTZ) 68, has requested authority under § 400.32(b)(2) of the Board's regulations on behalf of Electrolux Home Care Products Ltd. to conduct vacuum cleaner products manufacturing under zone procedures within Site 2 of FTZ 68 in El Paso, Texas (FTZ Docket 43–2006, filed 11/7/06);

WHEREAS, notice inviting public comment has been given in the **Federal Register** (71 FR 66500, 11/15/06); and,

WHEREAS, the Board adopts the findings and recommendations of the examiner's report, and finds that the requirements of the FTZ Act and the Board's regulations are satisfied, and that approval of the application is in the public interest;

NOW, THEREFORE, the Board hereby grants authority for the manufacture of vacuum cleaner products within Site 2 of FTZ 68, as described in the application and the **Federal Register** notice, subject to the FTZ Act and the Board's regulations, including Section 400.28.

Signed at Washington, DC, this 8th day of June 2007.

David M. Spooner,

Assistant Secretary of CommerceFor Import Administration,Alternate ChairmanForeign–Trade Zones Board.

Attest:

Pierre V. Duy,

Acting Executive Secretary.

[FR Doc. E7–11938 Filed 6–19–07; 8:45 am]

BILLING CODE 3510–DS–S

DEPARTMENT OF COMMERCE

National Oceanic and Atmospheric Administration

Availability of Seats for the Stellwagen Bank National Marine Sanctuary Advisory Council

AGENCY: National Marine Sanctuary Program (NMSP), National Ocean Service (NOS), Natioal Oceanic and Atmospheric Administration, Department of Commerce (DOC).

ACTION: Notice and request for applications.

SUMMARY: The *Stellwagen Bank National Marine Sanctuary* (SBNMS or sanctuary) is seeking applicants for the following thirty vacant public seats on its Sanctuary Advisory Council (Council) (15 members; 15 alternates): (2) Research (Member and Alternate) (2) Conservation (Member and Alternate); (2) Education (Member and Alternate); (1) Marine Transportation (Member and Alternate); (1) Recreation (Member and Alternate); (1) Whalewatching (Member and Alternate); (1) Fixed Gear Commercial Fishing (Member and Alternate); (1) Mobile Gear Commercial Fishing (Member and Alternate); (1) Business and Industry (Member and Alternate); and (3) At-Large (Member and Alternate). Applicants are chosen based upon their particular expertise and experience in relation to the seat for which they are applying; community and professional affiliations; philosophy regarding the protection and management of marine resources; and possibly the length of residence in the area affected by the sanctuary. Applicants who are chosen as members should expect to serve two-three year terms, pursuant to the Council's Charter. The Council consists also of three State and three Federal non-voting ex-officio seats.

DATES: Applications are due by August 15, 2007.

ADDRESSES: Application kits may be obtained from *Elizabeth.Stokes@noaa.gov* Stellwagen Bank National Marine Sanctuary, 175 Edward Foster Road, Scituate, MA 02066. Telephone 781–545–8026 x201. Completed applications should be sent to the same address.

FOR FURTHER INFORMATION CONTACT: For further questions contact; *Nathalie.Ward@noaa.gov,* External Affairs Coordinator. Telephone: 781–545–8026 x206.

SUPPLEMENTARY INFORMATION: The Stellwagen Bank National Marine Sanctuary Advisory Council was established in March 2001 to assure continued public participation in the management of the Sanctuary. The Advisory Council's 21 members represent a variety of local user groups, as well as the general public, plus seven local, State and Federal government agencies. Since its establishment, the Council has played a vital role in advising the Sanctuary and NOAA on critical issues and is currently focused on the sanctuary's new five-year Management Plan.

The Stellwagen Bank National Marine Sanctuary encompasses 842 square miles of ocean, stretching between Cape Ann and Cape Cod. Renowned for its scenic beauty and remarkable productivity, the sanctuary supports a rich diversity of marine life including 22 species of marine mammals, more than 30 species of seabirds, over 60 species of fishes, and hundreds of marine invertebrates and plants.

AUTHORITY: 16 U.S.C. sections 1431, *et seq.*

(Federal Domestic Assistance Catalogue Number 11.429 Marine Sanctuary Program)

Dated: June 13, 2007.

Daniel J. Basta,

Director, National Marine Sanctuary Program, National Ocean Service, National Oceanic and Atmospheric Administration.

[FR Doc. 07–3036 Filed 6–19–07; 8:45 am]

BILLING CODE 3510–NK–M

DEPARTMENT OF COMMERCE

National Oceanic and Atmospheric Administration

RIN 0648-XA87

Endangered and Threatened Species; Take of Anadromous Fish

AGENCY: National Marine Fisheries Service (NMFS), National Oceanic and Atmospheric Administration (NOAA), Commerce.

ACTION: Proposed modication of permit 1235.

SUMMARY: NOAA's National Marine Fisheries Service (NMFS) has received a request from the City of Seattle (the City) to amend its Permit 1235 (Permit) authorizing take of Puget Sound chinook salmon incidental to the operation of the City's watershed supply and management system. NMFS is requesting comments on whether Permit 1235 if amended as requested would still meet the statutory criteria for issuance of an incidental take permit.

DATES: Written comments on the proposed permit amendment must be received at the appropriate address or fax number (see **ADDRESSES**) no later than 5 p.m. Pacific Standard Time July 20, 2007.

ADDRESSES: Written comments should be sent to Matthew Longenbaugh, Habitat Conservation Division, National Marine Fisheries Service, 510 Desmond Drive, Suite 103, Lacey, WA 98503. Comments may also be faxed to 360–753–9517. Comments will be accepted via email at *Matthew.Longenbaugh@noaa.gov*

FOR FURTHER INFORMATION CONTACT: Matthew Longenbaugh at phone number 360–753–7761, or e-mail: *Matthew.Longenbaugh@noaa.gov*

SUPPLEMENTARY INFORMATION: Under the Endangered Species Act (ESA) and its implementing regulations, ≥take≥ - defined to include harm and harassment as well as activities such as killing and capture - of endangered species is prohibited, absent a permit or other exception. By regulation, NMFS has applied the prohibition of take to threatened Puget Sound chinook salmon. In 2000, NMFS issued Incidental Take Permit 1235 (Permit) authorizing take of Puget Sound chinook salmon incidental to the operation of the City's water supply system. The City's Cedar River Watershed Habitat Conservation Plan (HCP), required for issuance of an incidental take permit, and supporting documents by NMFS analyzed the effects of the City's activities, not only to the listed Puget Sound chinook salmon but also to several species that were not listed under the ESA in 2000. The HCP and the Implementing Agreement (IA) signed by the City and NMFS, among others, provide that the Permit's authorization for incidental take of unlisted species becomes effective for that species upon its listing and subsequent application of the take prohibition. However, until the species is listed and take is prohibited, the City needs no Federal authorization to take individual members of that unlisted species.

On March 1, 2007, the City requested that the Permit no longer include one species of salmon, the Cedar River

sockeye, that remains unlisted. In conjunction with this, the City also wishes to remove as covered activities the interim sockeye hatchery and the planned permanent sockeye hatchery, included in the HCP.

NMFS believes that this proposed change could qualify as a minor modification, pursuant to section 12.1 of the IA, because it appears that none of the remaining operations covered by the Permit would change and the City would remain obligated to continue all of the Permit's other mitigation measures. Further, NMFS believes that removal of the sockeye and the interim and planned hatcheries from the Permit will have no effect on operation of those hatcheries. Separate agreements, namely the Landsburg Mitigation Agreement signed by the City, NMFS and the State of Washington, as well a court settlement with the Muckleshoot Tribe, require that the City continue sockeye hatchery operations with the same mitigation measures and adaptive management that would be required under the Permit.

However, NMFS wishes to ensure that the Permit, without the Cedar River sockeye as a covered species and the interim and planned hatcheries as covered activities, is still consistent with the statutory issuance criteria contained in section 10 of the ESA. Accordingly, NMFS will treat the requested change as if it were an amendment pursuant to 12.2 of the IA, including conducting any required environmental reviews. NMFS therefore seeks comment on Permit 1235 as it would operate without including the Cedar River sockeye and the interim and planned hatcheries. NMFS is particularly interested in information regarding whether this change would alter the operations that will still be covered by the Permit, and whether the mitigation measures for those remaining operations will need modification.

Authority

Under section 10(a)(1)(b) of the ESA, the Secretary of Commerce is authorized to issue permits for incidental take of ESA-listed species. The regulations that describe procedures for issuing these permits are found at 50 CFR 222.307.

Dated: June 14, 2007.

Angela Somma,

Chief, Endangered Species Division, Office of Protected Resources, National Marine Fisheries Service.

[FR Doc. E7–11963 Filed 6–19–07; 8:45 am]

BILLING CODE 3510–22–S

DEPARTMENT OF COMMERCE

National Oceanic and Atmospheric Administration

Notice of Indirect Cost Rates for the National Marine Sanctuary Program for Fiscal Year 2005

AGENCY: National Oceanic and Atmospheric Administration (NOAA), Commerce.

ACTION: Notice of indirect cost rates for the National Marine Sanctuary Program for Fiscal Year 2005.

SUMMARY: The National Oceanic and Atmospheric Administration's (NOAA's) National Marine Sanctuary Program (NMSP) is announcing the establishment of new indirect cost rates on the recovery of indirect costs for its component organizations involved in natural resource damage assessment and restoration activities for fiscal year (FY) 2005. The indirect cost rates for this fiscal year and dates of implementation are provided in this notice. More information on these rates and the NMSP policy can be obtained from the address provided below.

FOR FURTHER INFORMATION CONTACT: Harriet Sopher, 301–713–3125, ext. 271; (FAX: 301–713–0404; e-mail: *Harriet.Sopher@noaa.gov.*

SUPPLEMENTARY INFORMATION: The mission of the NMSP with respect to Natural Resource Damage Assessment is to restore injuries to sanctuary resources caused by releases of hazardous substances or oil under the Comprehensive Environmental Response, Compensation, and Liability Act (CERCLA) (42 U.S.C., 9601 *et seq.*) or the Oil Pollution Act of 1990 (OPA) (33 U.S.C., 2701 *et seq.*), or physical injuries under the National Marine Sanctuaries Act (NMSA) (16 U.S.C., 1431 *et seq.*). The NOAA NMSP consists of the following component organizations: Thirteen Marine Sanctuaries and one National Monument within NOAA's National Ocean Service. The NMSP conducts Natural Resource Damage Assessments (NRDAs) as a basis for recovering damages from responsible parties and uses the funds recovered to restore injured sanctuary resources.

When addressing NRDA incidents, the costs of the damage assessment are recoverable from responsible parties who are potentially liable for an incident. Costs include direct and indirect costs. Direct costs are costs for activities that are clearly and readily attributable to a specific output. In the context of the NMSP, outputs may be associated with damage assessment cases, or may be represented by other program products such as damage assessment regulations. In contrast, indirect costs reflect the costs for activities that collectively support the NMSP's mission and operations. For example, indirect costs include general administrative support and traditional overheads. Although these costs may not be readily traced back to a specific direct activity indirect costs may be allocated to direct activities using an indirect cost distribution rate.

Consistent with standard Federal accounting requirements, the NMSP is required to account for and report the full costs of its programs and activities. Further, the NMSP is authorized by law to recover reasonable costs of damage assessment and restoration activities under CERCLA, OPA, and the NMSA. Within the constraints of these legal provisions and their regulatory applications, the NMSP has the discretion to develop indirect cost rates for its component organizations and formulate policies on the recover of indirect cost rates subject to its requirements.

The NMSP's Indirect Cost Effort

In October 2002, the NMSP hired the public accounting firm Cotton & Company (C&C) to: (1) Evaluate the cost accounting system and allocation practices; (2) recommend the appropriate indirect cost allocation methodology; and, (3) determine the indirect cost rates for the organizations that comprise the NMSP.

The NMSP requested an analysis of its indirect costs for fiscal year 2002. The goal was to develop the most appropriate indirect cost rate allocation methodology and rates for the NMSP component organizations. C&C has continued its assessment of the NMSP's indirect cost rate system and structure from FY2002 to present.

C&C concluded that the cost accounting system and allocation practices of the NMSP component organizations are consistent with Federal accounting requirements. C&C also determined that the most appropriate indirect allocation method was the Direct Labor Cost Base for all NMSP component organizations. The Direct Labor Cost Base is computed by allocating total indirect costs over the sum of direct labor dollars plus the application of NOAA's leave surcharge and benefits rates to direct labor. The indirect cost rates that C&C has computed for the NMSP component organizations were further assessed as being fair and equitable. A report on C&C's effort, their assessment of the NMSP's cost accounting system and

practice, and their determination respecting the most appropriate indirect cost methodology and rates can be obtained from: Harriet Sopher, NMSP 1305 East West Highway, Silver Spring, MD 20910.

C&C reaffirmed that the Direct Labor Cost Base is the most appropriate indirect allocation method for the development of the FY 2005 indirect cost rates.

The NMSP's Indirect Cost Rates and Policies

The NMSP will apply the indirect cost rates for FY 2005 as recommended by C&C for each of the NMSP component organizations as provided in the following table:

NMSP component organization	FY 2004 indirect rate (percent)
National Marine Sanctuary Program (NMSP)	247.63
NMSP Florida Keys National Marine Sanctuary (FKNMS)	408.76

The FY 2005 rates identified in this policy will be applied to all damage assessment and restoration case costs incurred between October 1, 2004 and September 30, 2005, using the Direct Labor Cost base allocation methodology. For cases that have settled and for costs claims paid prior to the effective date of the fiscal year in question, the NMSP will not re-open any resolved matters for the purpose of applying the rates in this policy. For cases not settled and cost claims not paid prior to the effective date of the fiscal year in question, costs will be recalculated using the rates in this policy. The NMSP will use the FY 2005 rates for future fiscal years until year-specific rates can be developed.

Dated: June 11, 2007.

Daniel J. Basta,

Director, National Marine Sanctuary Program.

[FR Doc. 07–3017 Filed 06–19–07; 8:45 am]

BILLING CODE 3510–NK–M

DEPARTMENT OF COMMERCE

National Oceanic and Atmospheric Administration

Notice of Indirect Cost Rates for the National Marine Sanctuary Program for Fiscal Year 2004

AGENCY: National Oceanic and Atmospheric Administration (NOAA), Commerce.

ACTION: Notice of indirect cost rates for the National Marine Sanctuary Program for fiscal year 2004.

SUMMARY: The National Oceanic and Atmospheric Administration's (NOAA's) National Marine Sanctuary Program (NMSP) is announcing the establishment of new indirect cost rates on the recovery of indirect costs for its component organizations involved in natural resource damage assessment and restoration activities for fiscal year (FY) 2004. The indirect cost rates for this fiscal year and dates of implementation are provided in this notice. More information on these rates and the NMSP policy can be obtained from the address provided below.

FOR FURTHER INFORMATION CONTACT: Harriet Sopher, 301–713–3125, ext. 271; (FAX: 301–713–0404; email: *Harriet.Sopher@noaa.gov.*

SUPPLEMENTARY INFORMATION: The mission of the NMSP with respect to Natural Resource Damage Assessment is to restore injuries to sanctuary resources caused by releases of hazardous substances or oil under the Comprehensive Environmental Response, Compensation, and Liability Act (CERCLA) (42 U.S.C., 9601 *et seq.)* or the Oil Pollution Act of 1990 (OPA) (33 U.S.C., 2701 *et seq.*), or physical injuries under the National Marine Sanctuaries Act (NMSA) (16 U.S.C., 1431 *et seq.*). The NOAA NMSP consists of the following component organizations: Thirteen Marine Sanctuaries and one National Monument within NOAA's National Ocean Service. The NMSP conducts Natural Resource Damage Assessments (NRDAs) as a basis for recovering damages from responsible parties and uses the funds recovered to restore injured sanctuary resources.

When addressing NRDA incidents, the costs of the damage assessment are recoverable from responsible parties who are potentially liable for an incident. Costs include direct and indirect costs. Direct costs are costs for activities that are clearly and readily attributable to a specific output. In the context of the NMSP, outputs may be associated with damage assessment cases, or may be represented by other program products such as damage assessment regulations. In contrast, indirect costs reflect the costs for activities that collectively support the NMSP's mission and operations. For example, indirect costs include general administrative support and traditional overheads. Although these costs may not be readily traced back to a specific direct activity indirect costs may be allocated to direct activities using an indirect cost distribution rate.

Consistent with standard Federal accounting requirements, the NMSP is required to account for and report the full costs of its programs and activities. Further, the NMSP is authorized by law to recover reasonable costs of damage assessment and restoration activities under CERCLA, OPA, and the NMSA. Within the constraints of these legal provisions and their regulatory applications, the NMSP has the discretion to develop indirect cost rates for its component organizations and formulate policies on the recovery of indirect cost rates subject to its requirements.

The NMSP's Indirect Cost Effort

In October 2002, the NMSP hired the public accounting firm Cotton & Company (C&C) to: (1) Evaluate the cost accounting system and allocation practices; (2) recommend the appropriate indirect cost allocation methodology; and, (3) determine the indirect cost rates for the organizations that comprise the NMSP.

The NMSP requested an analysis of its indirect costs for fiscal year 2002. The goal was to develop the most appropriate indirect cost rate allocation methodology and rates for the NMSP component organizations. C&C has continued its assessment of the NMSP's indirect cost rate system and structure from FY2002 to present.

C&C concluded that the cost accounting system and allocation practices of the NMSP component organizations are consistent with Federal accounting requirements. C&C also determined that the most appropriate indirect allocation method was the Direct Labor Cost Base for all NMSP component organizations. The Direct Labor Cost Base is computed by allocating total indirect costs over the sum of direct labor dollars plus the application of NOAA's leave surcharge and benefits rates to direct labor. The indirect cost rates that C&C has computed for the NMSP component organizations were further assessed as being fair and equitable. A report on C&C's effort, their assessment of the NMSP's cost accounting system practice, and their determination respecting the most appropriate indirect cost methodology and rates can be obtained from: Harriet Sopher, NMSP 1305 East West Highway, Silver Spring, MD 20910.

C&C reaffirmed that the Direct Labor Cost Base is the most appropriate indirect allocation method for the development of the FY 2004 indirect cost rates.

The NMSP's Indirect Cost Rates and Policies

The NMSP will apply the indirect cost rates for FY 2004 as recommended by C&C for each of the NMSP component organizations as provided in the following table:

NMSP component organization	FY 2004 indirect rate (percent)
National Marine Sanctuary. Program (NMSP)	125.40
NMSP Florida Keys National. Marine Sanctuary (FKNMS)	198.37

The FY 2004 rates identified in this policy will be applied to all damage assessment and restoration case costs incurred between October 1, 2003 and September 30, 2004, using the Direct Labor Cost base allocation methodology. For cases that have settled and for costs claims paid prior to the effective date of the fiscal year in question, the NMSP will not re-open any resolved matters for the purpose of applying the rates in this policy. For cases not settled and cost claims not paid prior to the effective date of the fiscal year in question, costs will be recalculated using the rates in this policy. The NMSP will use the FY 2004 rates for future fiscal years until year-specific rates can be developed.

Dated: June 11, 2007

Daniel J. Basta,

Director, National Marine Sanctuary Program.

[FR Doc. 07–3018 Filed 6–19–07; 8:45 am]

BILLING CODE 3510–NK–M

DEPARTMENT OF COMMERCE

National Oceanic and Atmospheric Administration

Notice of Indirect Cost Rates for the National Marine Sanctuary Program for Fiscal Year 2003

AGENCY: National Oceanic and Atmospheric Administration (NOAA), Commerce.

ACTION: Notice of indirect cost rates for the National Marine Sanctuary Program for fiscal year 2003.

SUMMARY: The National Oceanic and Atmospheric Administration's (NOAA's) National Marine Sanctuary Program (NMSP) is announcing the establishment of new indirect cost rates on the recovery of indirect costs for its component organizations involved in natural resource damage assessment and restoration activities for fiscal year (FY) 2003. The indirect cost rates for this fiscal year and dates of implementation are provided in this notice. More information on these rates and the NMSP policy can be obtained from the address provided below.

FOR FURTHER INFORMATION CONTACT: Harriet Sopher, 301–713–3125, ext. 271; (FAX: 301–713–0404; e-mail: *Harriet.Sopher@noaa.gov.*

SUPPLEMENTARY INFORMATION: The mission of the NMSP with respect to Natural Resource Damage Assessment is to restore injuries to sanctuary resources caused by releases of hazardous substances or oil under the Comprehensive Environmental Response, Compensation, and Liability Act (CERCLA) (42 U.S.C., 9601 *et seq.*) or the Oil Pollution Act of 1990 (OPA) (33 U.S.C., 2701 *et seq.*), or physical injuries under the National Marine Sanctuaries Act (NMSA) (16 U.S.C., 1431 *et seq.*). The NOAA NMSP consists of the following component organizations: Thirteen Marine Sanctuaries and one National Monument within NOAA's National Ocean Service. The NMSP conducts Natural Resource Damage Assessments (NRDAs) as a basis for recovering damages from responsible parties and uses the funds recovered to restore injured sanctuary resources.

When addressing NRDA incidents, the costs of the damage assessment are recoverable from responsible parties who are potentially liable for an incident. Costs include direct and indirect costs. Direct costs are costs for activities that are clearly and readily attributable to a specific output. In the context of the NMSP, outputs may be associated with damage assessment cases, or may be represented by other program products such as damage assessment regulations. In contrast, indirect costs reflect the costs for activities that collectively support the NMSP's mission and operations. For example, indirect costs include general administrative support and traditional overheads. Although these costs may not be readily traced back to a specific direct activity, indirect costs may be allocated to direct activities using an indirect cost distribution rate.

Consistent with standard Federal accounting requirements, the NMSP is required to account for and report the full costs of its programs and activities. Further, the NMSP is authorized by law to recover reasonable costs of damage assessment and restoration activities under CERCLA, OPA, and the NMSA. Within the constraints of these legal provisions and their regulatory applications, the NMSP has the discretion to develop indirect cost rates for its component organizations and formulate policies on the recovery of indirect cost rates subject to its requirements.

The NMSP's Indirect Cost Effort

In October 2002, the NMSP hired the public accounting firm Cotton & Company (C&C) to: (1) Evaluate the cost accounting system and allocation practices; (2) recommend the appropriate indirect cost allocation methodology; and, (3) determine the indirect cost rates for the organizations that comprise the NMSP.

The NMSP requested an analysis of its indirect costs for fiscal year 2002. The goal was to develop the most appropriate indirect cost rate allocation methodology and rates for the NMSP component organizations. C&C has continued its assessment of the NMSP's indirect cost rate system and structure from FY 2002 to present.

C&C concluded that the cost accounting system and allocation practices of the NMSP component organizations are consistent with Federal accounting requirements. C&C also determined that the most appropriate indirect allocation method was the Direct Labor Cost Basefor all NMSP component organizations. The Direct Labor Cost Base is computed by allocating total indirect costs over the sum of direct labor dollars plus the application of NOAA's leave surcharge and benefits rates to direct labor. The indirect cost rates that C&C has computed to the NMSP component organizations were further assessed as being fair and equitable. A report on C&C's effort, their assessment of the NMSP's cost accounting system and practice, and their determination respecting the most appropriate indirect cost methodology and rates can be obtained from: Harriet Sopher, NMSP 1305 East West Highway, Silver Spring, MD 20910.

C&C reaffirmed that the Direct Labor Cost Base remained the most appropriate indirect allocation method for the development of the FY 2003 indirect cost rates.

The NMSP's Indirect Cost Rates and Policies

The NMSP will apply the indirect cost rates for FY 2003 as recommended by C&C for each of the NMSP component organizations as provided in the following table:

NMSP component organization	FY 2003 indirect rate (percent)
National Marine Sanctuary Program (NMSP)	187.67

NMSP component organization	FY 2003 indirect rate (percent)
NMSP Florida Keys National Marine Sanctuary (FKNMS)	339.05

The FY 2003 rates identified in this policy will be applied to all damage assessment and restoration case costs incurred between October 1, 2002 and September 30, 2003, using the Direct Labor Cost Base allocation methodology. For cases that have settled and for costs claims paid prior to the effective date of the fiscal year in question, the NMSP will not re-open any resolved matters for the purpose of applying the rates in this policy. For cases not settled and cost claims not paid prior to the effective date of the fiscal year in question, costs may be recalculated using the rates in this policy. The NMSP will use the FY 2003 rates for future fiscal years until year-specific rates can be developed.

Dated: June 11, 2007.

Daniel J. Basta,

Director, National Marine Sanctuary Program.

[FR Doc. 07–3019 Filed 6–19–07; 8:45 am]

BILLING CODE 3510–NK–M

DEPARTMENT OF COMMERCE

National Oceanic and Atmospheric Administration

RIN 0648–XA88

Marine Mammals; File No.1034–1685

AGENCY: National Marine Fisheries Service (NMFS), National Oceanic and Atmospheric Administration (NOAA), Commerce.

ACTION: Notice; receipt of application for amendment.

SUMMARY: Notice is hereby given that Dr. Markus Horning, Marine Mammal Institute, Oregon State University, 2030 SE Marine Science Drive, Newport, OR 97365, has requested an amendment to scientific research Permit No. 1034–1685–01 for research on marine mammals.

DATES: Written, telefaxed, or e-mail comments must be received on or before July 20, 2007.

ADDRESSES: The amendment request and related documents are available for review upon written request or by appointment in the following office(s):

Permits, Conservation and Education Division, Office of Protected Resources, NMFS, 1315 East-West Highway, Room 13705, Silver Spring, MD 20910; phone (301)713–2289; fax (301)427–2521; and Southwest Region, NMFS, 501 West Ocean Blvd., Suite 4200, Long Beach, CA 90802–4213; phone (562)980–4001; fax (562)980–4018.

Written comments or requests for a public hearing on this request should be submitted to the Chief, Permits, Conservation and Education Division, F/PR1, Office of Protected Resources, NMFS, 1315 East-West Highway, Room 13705, Silver Spring, MD 20910. Those individuals requesting a hearing should set forth the specific reasons why a hearing on this particular amendment request would be appropriate.

Comments may also be submitted by facsimile at (301)427–2521, provided the facsimile is confirmed by hard copy submitted by mail and postmarked no later than the closing date of the comment period.

Comments may also be submitted by e-mail. The mailbox address for providing e-mail comments is *NMFS.Pr1Comments@noaa.gov*. Include in the subject line of the e-mail comment the following document identifier: File No. 1034–1685–02.

FOR FURTHER INFORMATION CONTACT: Amy Sloan or Jaclyn Daly, (301)713–2289.

SUPPLEMENTARY INFORMATION: The subject amendment to Permit No. 1034–1685–01, issued on November 11, 2004 (69 FR 69585), is requested under the authority of the Marine Mammal Protection Act of 1972, as amended (16 U.S.C. 1361 *et seq.*) and the regulations governing the taking and importing of marine mammals (50 CFR part 216).

Permit No. 1034–1685–01 authorizes the permit holder to surgically implant dual satellite-linked life history transmitters; attach external satellite tags; collect blood, blubber, and fecal samples; and conduct bioelectrical impedance analysis, deuterium dilution determinations, and blubber ultrasound measurements on California sea lions (Zalophus californianus) at The Marine Mammal Center. The permit also authorizes anesthesia and adrenocorticotropic hormone (ACTH) injections to measure adrenal stress levels in up to 6 California sea lions. Stress levels are measured through blood and fecal analysis.

The permit holder requests authorization to increase the number of California sea lions that receive ACTH injections to 12 animals, and inject 6 animals with a sterile saline solution as a control group. The permit holder also requests the addition of a co-investigator to the study.

In compliance with the National Environmental Policy Act of 1969 (42 U.S.C. 4321 *et seq.*), an initial determination has been made that the activity proposed is categorically excluded from the requirement to prepare an environmental assessment or environmental impact statement.

Concurrent with the publication of this notice in the **Federal Register**, NMFS is forwarding copies of this application to the Marine Mammal Commission and its Committee of Scientific Advisors.

Dated: June 13, 2007.

P. Michael Payne,

Chief, Permits, Conservation and Education Division, Office of Protected Resources, National Marine Fisheries Service.

[FR Doc. E7–11956 Filed 6–19–07; 8:45 am]

BILLING CODE 3510–22–S

DEPARTMENT OF COMMERCE

Patent and Trademark Office

[Docket No. PTO–C–2007–0023]

Public Advisory Committees

AGENCY: United States Patent and Trademark Office, DOC.

ACTION: Notice and request for nominations.

SUMMARY: On November 29, 1999, the President signed into law the Patent and Trademark Office Efficiency Act (the ''Act''), Pub. L. 106–113, Appendix I, Title IV, Subtitle G, 113 Stat.1501A–572, which, among other things, established two Public Advisory Committees to review the policies, goals, performance, budget and user fees of the United States Patent and Trademark Office (USPTO) with respect to patents, in the case of the Patent Public Advisory Committee, and with respect to trademarks, in the case of the Trademark Public Advisory Committee, and to advise the Director on these matters. The USPTO is requesting nominations for three (3) members to each Public Advisory Committee for terms of three years that begin from date of appointment.

DATES: Nominations must be postmarked or electronically transmitted on or beforeSeptember 1, 2007.

ADDRESSES: Persons wishing to submit nominations should send the nominee's resumé to Chief of Staff, Office of the Under Secretary of Commerce for Intellectual Property and Director of the USPTO, Post Office Box 1450, Alexandria, Virginia 22313–1450; by electronic mail to: *PPACnominations@uspto.gov* for the Patent Public Advisory Committee or *TPACnominations@uspto.gov* for the

Trademark Patent Public Advisory Committee; by facsimile transmission marked to the Chief of Staff's attention at (571) 273–0464, or by mail marked to the Chief of Staff's attention and addressed to the Office of the Under Secretary of Commerce for Intellectual Property and Director of the USPTO, Post Office Box 1450,Alexandria, Virginia 22313–1450.

FOR FURTHER INFORMATION CONTACT: Eleanor K. Meltzer, Chief of Staff, by facsimile transmission marked to her attention at (571) 273–0464, or by mail marked to her attention and addressed to the Office of the Under Secretary of Commerce for Intellectual Property and Director of the USPTO, Post Office Box 1450, Alexandria, Virginia 22313–1450.

SUPPLEMENTARY INFORMATION: The Advisory Committees' duties include:

- Review policies, goals, performance, budget, and user fees of the USPTO relating to patents and trademarks, respectively, and advise the Under Secretary of Commerce for Intellectual Property and Director of the USPTO on these matters; and
- Within 60 days after the end of each fiscal year: (1) Prepare an annual report on matters listed above; (2) transmit a report to the Secretary of Commerce, the President, and the Committees on the Judiciary of the Senate and the House of Representatives; and (3) publish the report in the Official Gazette of the USPTO.

Members of the Patent and Trademark Public Advisory Committees are appointed by and serve at the pleasure of the Secretary of Commerce for three (3)-year terms.

Advisory Committees

The Public Advisory Committees are each composed of nine (9) voting members who are appointed by the Secretary of Commerce (the ''Secretary''). The Public Advisory Committee members must be United States citizens and represent the interests of diverse users of the USPTO, both large and small entity applicants in proportion to the number of such applications filed. The Committees must include members who have ''substantial backgrounds and achievement in finance, management, labor relations, science, technology, and office automation.'' 35 U.S.C. 5(b)(3). In the case of the Patent Public AdvisoryCommittee, at least twenty-five (25) percent of the members must represent ''small business concerns, independent inventors, and nonprofit organizations,'' and at least one member must represent the independent inventor community. 35 U.S.C. 5(b)(2).Each of the Public Advisory Committees also includes three (3) non-voting members representing each labor organization recognized by the USPTO.

Procedures and Guidelines of the Patent and Trademark Public Advisory Committees

Each newly appointed member of the Patent and Trademark Public Advisory Committees will serve for a term of three years from date of appointment. As required by the Act, members of the Patent and Trademark Public Advisory Committees will receive compensation for each day while the member is attending meetings or engaged in the business of that Advisory Committee. The rate of compensation is the daily equivalent of the annual rate of basic pay in effect for level III of the Executive Schedule under section 5314 of title 5, United States Code.While away from home or regular place of business, each member will be allowed travel expenses, including per diem in lieu of subsistence, as authorized by section 5703 of title 5,United States Code. The USPTO will provide the necessary administrative support, including technical assistance, for the Committees.

Applicability of Certain Ethics Laws

Members of each Public Advisory Committee shall be special Government employees within the meaning of section 202 of title 18, United States Code. The following additional information includes several, but not all, of the ethics rules that apply to members, and assumes that members are not engaged in Public Advisory Committee business more than sixty days during each calendar year:

- Each member will be required to file a confidential financial disclosure form within thirty (30) days of appointment. 5 CFR 2634.202(c), 2634.204, 2634.903, and 2634.904(b).
- Each member will be subject to many of the public integrity laws, including criminal bars against representing a party, 18 U.S.C. 205(c), in a particular matter that came before the member's committee and that involved at least one specific party. *See also* 18 U.S.C. 207 for post-membership bars. A member also must not act on a matter in which the member (or any of certain closely related entities) has a financial interest. 18 U.S.C. 208.
- Representation of foreign interests may also raise issues. 35 U.S.C. 5(a)(1) and 18 U.S.C. 219.

Meetings of the Patent and Trademark Public Advisory Committees

Meetings of each Advisory Committee will take place at the call of the Chair to consider an agenda set by the Chair. Meetings may be conducted in person, electronically through the Internet, or by other appropriate means. The meetings of each Advisory Committee will be open to the public except each Advisory Committee may, by majority vote, meet in executive session when considering personnel, privileged, or other confidential matters. Nominees must also have the ability to participate in Committee business through the Internet.

Procedures for Submitting Nominations

Submit resumés for nomination for the Patent Public Advisory Committee and the Trademark Public Advisory Committee to: Chief of Staff to the Under Secretary of Commerce for Intellectual Property and Director of the United States Patent and Trademark Office, utilizing the addresses provided above.

Dated: June 14, 2007.

Jon W. Dudas,

Under Secretary of Commerce for Intellectual Property andDirector of the United States Patent and Trademark Office.

[FR Doc. E7–11918 Filed 6–19–07; 8:45 am]

BILLING CODE 3510–16–P

DEPARTMENT OF DEFENSE

Department of the Army

Notice of Availability (NOA) of the Final Fort Carson Transformation Environmental Impact Statement (EIS), Clean Air Act General Conformity Determination, and Evaluation of Environmental Effects of Renewed Land and Mineral Withdrawal Under Public Law 104–201, Colorado

AGENCY: Department of the Army, Department of Defense.

ACTION: Notice of availability.

SUMMARY: The Army announces the availability of the Final Fort Carson Transformation EIS evaluating the environmental effects of implementing restationing actions of the Base Realignment and Closure (BRAC) 2005 and other Army transformation programs at the Fort Carson military installation near Colorado Springs, Colorado. The final EIS also documents the U.S. Army's evaluation of environmental effects of withdrawal of public land and mineral rights under Public Law 104–201.

DATES: The waiting period for the Final EIS will end 30 days after publication of an NOA in the **Federal Register** by the U.S. Environmental Protection Agency.

ADDRESSES: To obtain a copy of the FEIS contact the Fort Carson National Environmental Policy Act (NEPAP) Coordinator, Directorate of Environmental Compliance and Management, 1638 Elwell Street, Building 6236, Fort Carson, Colorado 80913–4000; e-mail: *carsdecamnepa@conus.army.mil.*

FOR FURTHER INFORMATION CONTACT: Fort Carson NEPA Coordinator at (719) 526–4666 or fax (719) 526–1705.

SUPPLEMENTARY INFORMATION: The Final Fort Carson Transformation EIS evaluates the environmental and socioeconomic effects of implementing three Army transformation programs at Fort Carson: BRAC 2005, Integrated Global Presence and Basing Strategy (also known as Global Defense Posture Realignment), and the Army Modular Force initiative. These programs are part of the overall Army restructuring and are needed to prepare the Army's combat forces for deployment around the world.

The Proposed Action evaluated in the Final Fort Carson Transformation EIS is the Army's preferred alternative to implement the three transformational programs. The Proposed Action includes three primary components: (1) Changes in force structure resulting in a net gain of military units and personnel; (2) facility construction, renovation, and demolition; and (3) increased frequency of live-fire and maneuver training. The EIS also documents the compliance of the Proposed Action with the General Conformity Rule requirements of the Clean Air Act. In addition, the Final EIS evaluates the environmental effects of renewal of the current withdrawal and reservation of 3,133.02 acres of public land and 11,415.16 acres of federally owned minerals at Fort Carson (as required by Section 2908 of Public Law 104–201).

Under the Proposed Action alternative, the number of troops at Fort Carson will increase by approximately 8,500 Soldiers. Military dependent, civilian, and contractor worker populations supported by Fort Carson also will increase. In total, Soldiers, their dependents, and support personnel will grow to approximately 59,700 by 2011, an increase of approximately 21,300 persons (60 percent) over the implementation period.

The Army will construct 25 projects, primarily in the Cantonment area. In addition, facilities and infrastructure no longer needed to support the Proposed Action alternative will be demolished; facilities will be relocated to support new construction; and existing facilities and infrastructure will be renovated to support the new population and training activities.

The Proposed Action alternative will provide for increased frequency of training for existing and new units stationed at Fort Carson. The installation's downrange area will be used more frequently for individual and crew live fire, maneuver, and combined live fire and maneuver training. Fort Carson will continue to implement its existing land and environmental management programs to balance training requirements and land sustainability. Large area maneuver training for Fort Carson's troops will continue to occur at the Pinon Canyon Maneuver Site, which is Fort Carson's maneuver-training area located approximately 150 miles southeast of Fort Carson.

The Final EIS also evaluated the No Action alternative, which would result in not implementing the Proposed Action troop restationing; construction, renovation, and demolition projections; and increased frequency of training. The No Action alternative is not feasible because restationing has been directed by BRAC 2005. It was included in the Final EIS, as required by the Council on Environmental Quality and the Army's NEPA implementing regulations, to provide a benchmark by which to compare the magnitude of environmental effects of the Proposed Action.

Permanent restationing alternatives, therefore, were not considered in the Final EIS in accordance with the BRAC Act of 1990, which does not permit decisions on restationing troops to alternate installations to be revisited in NEPA documents. Other alternatives considered by the Army, but determined not to be feasible, included training troops at other locales, acquiring additional land for training, or varying training schedules to account for operational deployments. These alternatives were determined not to be reasonable because they either did not meet the purpose and need of the action or unreasonably restricted the Army's ability to react to changing conditions.

The Proposed Action has the potential to result in adverse effects to land use, air quality, geology and soils, water resources, biological resources, cultural resources, transportation, utilities, and hazardous and toxic materials. It could also result in cumulative environmental effects. Beneficial effects of the Proposed Action will result for socioeconomic resources. With implementation of mitigation measures and best management practices, significant adverse environmental impacts will not occur.

An electronic version of the Final EIS can be viewed or downloaded online at *http://www.hqda.army.mil/acsim/brac/nepa_eis_docs.htm.* Copies can be requested from the Fort Carson NEPA Coordinator or viewed at local libraries.

Dated: June 13, 2007.

Addison D. Davis, IV

Deputy Assistant Secretary of the Army (Environmental, Safety and Occupational Health).

[FR Doc. 07–3025 Filed 6–19–07; 8:45 am]

BILLING CODE 3710–08–M

DEPARTMENT OF DEFENSE

Department of the Army

Notice of Availability (NOA) of the Final Pinon Canyon Maneuver Site (PCMS) Transformation Environmental Impact Statement (EIS) and Evaluation of Environmental Effects of Continued Land and Mineral Withdrawal Under Public Law 104–201

AGENCY: Department of the Army, Department of Defense.

ACTION: Notice of availability.

SUMMARY: The Army announces the availability of the Final PCMS Transformation EIS evaluating the environmental effects of implementing restationing actions of the Base Realignment and Closure (BRAC) 2005 and other Army transformation programs at the PCMS training area in Las Animas County in southeastern Colorado. The Final EIS also documents the U.S. Army's evaluation of environmental effects of withdrawal of public land and mineral rights under Public Law 104–201.

DATES: The waiting period for the Final EIS will end 30 days after publication of an NOA in the **Federal Register** by the U.S. Environmental Protection Agency.

ADDRESSES: To obtain a copy of the FEIS contact the PCMS National Environmental Policy Act (NEPA) Coordinator, Directorate of Environmental Compliance and Management, 1638 Elwell Street, Building 6236, Fort Carson, CO 80913–4000; e–mail: *carsdecampcmsnepa&conus.army.mil*

FOR FURTHER INFORMATION CONTACT: PCMS NEPA Coordinator at (719) 526–0912 or fax (719) 526–17050.

SUPPLEMENTARY INFORMATION: The Final PCMS Transformation EIS evaluates the environmental and socioeconomic effects of implementing three Army transformation programs at the Fort

Carson: BRAC 2005; Integrated Global Presence and Basing Strategy (also known as Global Defense Posture Realignment); and the Army Modular Force initiative. These programs are part of the overall Army restructuring and are needed to prepare the Army's combat forces for deployment around the world.

The Proposed Action evaluated in the Final PCMS Transformation EIS is the Army's preferred alternative to implement the three transformation programs. The Proposed Action includes: (1) Increased use of the PCMS training areas to provide training for approximately 8,500 realigned Active Component (AC) soldiers and additional Reserve Component (RC) soldiers assigned to, or otherwise under the control of, Fort Carson, and (2) construction of facilities in the cantonment and training areas. The Final EIS also evaluates the environmental effects of the current withdrawal and reservation of 2,517.12 acres of public land and 130,139 acres of federally owned minerals within the PCMS borders (as required by Section 2908 of Pub. L. 140–201.

The Proposed Action will provide for increased frequency of training for existing and new units stationed at, or otherwise assigned to Fort Carson. Training and maneuver activities would be similar to the types of activities that presently occur on the PCMS. The increased training requirements of additional AC and RC units, however, will result in increased frequency of use of the training areas. The Army will continue to implement land and environmental management programs and practices to sustain its training lands for continued use.

Support facilities will be constructed in the PCMS cantonment area, including a brigade support complex, medical facilities, storage facilities, minimum soldier support functions, a vehicle maintenance facility, motor pools and upgrade of roads and utilities. Similar to existing facilities at the PCMS, the cantonment facilities constructed under the Proposed Action alternative would be austere. No units will be permanently stationed at the PCMS; therefore, the PCMS will not support long-term soldier care and will have no role in providing permanent support for dependents, civilian contractors, or personnel other than minimal custodial staff. Outside the cantonment, the Army will construct and operate a live hand grenade range, ammunition holding area, protective equipment training facility, and communication facilities, and upgrade an existing small-arms range building. These projects are necessary to allow the PCMS to certify soldiers for operational deployments.

The Final EIS also evaluated the No Action alternative in accordance with the Council on Environmental Quality and Army NEPA implementing regulations to provide a benchmark against which to compare the magnitude of environmental effects of the Proposed Action. Under the No Action alternative, no additional soldiers would train at the PCMS despite the stationing of significant numbers of additional soldiers at Fort Carson. The Proposed Action's construction would not occur. Existing land and environmental management programs would continue. This alternative is not feasible because restationing at Fort Carson has been directed by BRAC 2005, and soldiers assigned to Fort Carson need to be trained.

Alternatives for the BRAC realignment at Fort Carson were not considered in the Final EIS in accordance with the BRAC Law, which exempts such alternatives from consideration. Other alternatives considered by the Army, but determined not to be feasible, included training troops at other locales, acquiring additional land for training, or varying training schedules to account for operational deployments. These alternatives were determined not to be reasonable because they did not meet the purpose and need of the action or unreasonably restricted the Army's ability to react to changing conditions. Acquisition of additional land was also not considered reasonable, in part, because not enough information about it is currently known.

The Proposed Action has the potential to result in adverse effects to land use, air quality, noise, geology and soils, water resources, biological resources, cultural resources, transportation, utilities, and hazardous and toxic substances. With implementation of mitigation measures and best management practices, none of the impacts would be significant. Minor temporary beneficial effects will occur for socioeconomic resources.

The Proposed Action does not include expansion of the PCMS or land acquisition. The Proposed Action incorporates modifications to training requirements to best meet current training needs. The Army plans to prepare a separate EIS for PCMS land expansion once a proposed action and initial set of alternatives have been developed for that action.

An electronic version of the Final EIS can be viewed or downloaded from the following Web site: *http://www.hqda.army.mil/acsim/brac/nepa_eis_docs.htm.* Copies can be requested from the PCMS NEPA Coordinator or viewed at local libraries.

Dated: June 13, 2007.

Addison D. Davis, IV,

Deputy Assistant Secretary of the Army (Environment, Safety and Occupational Health).

[FR Doc. 07–3026 Filed 6–19–07; 8:45 am]

BILLING CODE 3710–08–M

DEPARTMENT OF EDUCATION

Notice of Proposed Information Collection Requests

AGENCY: Department of Education.

SUMMARY: The Acting Leader, Information Management Case Services Team, Regulatory Information Management Services, Office of Management, invites comments on the proposed information collection requests as required by the Paperwork Reduction Act of 1995.

DATES: Interested persons are invited to submit comments on or before August 20, 2007.

SUPPLEMENTARY INFORMATION: Section 3506 of the Paperwork Reduction Act of 1995 (44 U.S.C. Chapter 35) requires that the Office of Management and Budget (OMB) provide interested Federal agencies and the public an early opportunity to comment on information collection requests. OMB may amend or waive the requirement for public consultation to the extent that public participation in the approval process would defeat the purpose of the information collection, violate State or Federal law, or substantially interfere with any agency's ability to perform its statutory obligations. The Acting Leader, Information Management Case Services Team, Regulatory Information Management Services, Office of Management, publishes that notice containing proposed information collection requests prior to submission of these requests to OMB. Each proposed information collection, grouped by office, contains the following: (1) Type of review requested, e.g. new, revision, extension, existing or reinstatement; (2) Title; (3) Summary of the collection; (4) Description of the need for, and proposed use of, the information; (5) Respondents and frequency of collection; and (6) Reporting and/or Recordkeeping burden. OMB invites public comment.

The Department of Education is especially interested in public comment addressing the following issues: (1) Is this collection necessary to the proper functions of the Department; (2) will

this information be processed and used in a timely manner; (3) is the estimate of burden accurate; (4) how might the Department enhance the quality, utility, and clarity of the information to be collected; and (5) how might the Department minimize the burden of this collection on the respondents, including through the use of information technology.

Dated: June 14, 2007.

James Hyler,

Acting Leader, Information Management Case Services Team,Regulatory Information Management Services,Office of Management.

Office of Special Education and Rehabilitative Services

Type of Review: Revision.

Title: Special Education—Institutional Reporting on Regulatory Compliance Related to the Personnel Preparation Program Service Obligation.

Frequency: On occasion; annually; end of semester.

Affected Public:

Not-for-profit institutions; Individuals or household; State, Local, or Tribal Gov't, SEAs or LEAs.

Reporting and Recordkeeping Hour Burden:

Responses: 7,875.

Burden Hours: 16,250.

Abstract: The data collections under this request are governed by Section 304.1–304.32 of the December 9, 1999 regulations that implement section 673(h) of the IDEA amendments of 1997 which requires that individuals who receive a scholarship through the Personnel Development Program funded under the Act subsequently provide special education and related services to children with disabilities for a period of two years for every year for which assistance was received. Scholarship recipients who do not satisfy the requirements of the regulations must repay all or part of the cost of assistance in accordance with regulations issued by the Secretary. These regulations implement requirements governing among other things, the service obligation for scholars, oversight by grantees, and repayment of scholarship. In order for the Federal government to ensure the goals of the program are achieved, certain data collection, record keeping, and documentation are necessary.

Requests for copies of the proposed information collection request may be accessed from *http://edicsweb.ed.gov,* by selecting the ''Browse Pending Collections'' link and by clicking on link number 3380. When you access the information collection, click on ''Download Attachments'' to view. Written requests for information should be addressed to U.S. Department of Education, 400 Maryland Avenue, SW., Potomac Center, 9th Floor, Washington, DC 20202–4700. Requests may also be electronically mailed to *ICDocketMgr@ed.gov* or faxed to 202–245–6623. Please specify the complete title of the information collection when making your request.

Comments regarding burden and/or the collection activity requirements should be electronically mailed to *ICDocketMgr@ed.gov*. Individuals who use a telecommunications device for the deaf (TDD) may call the Federal Information Relay Service (FIRS) at 1–800–877–8339.

[FR Doc. E7–11859 Filed 6–19–07; 8:45 am]

BILLING CODE 4000–01–P

DEPARTMENT OF EDUCATION

Notice of Proposed Information Collection Requests

AGENCY: Department of Education.

ACTION: Notice of proposed information collection requests.

SUMMARY: The Acting Leader, Information Management Case Services Team, Regulatory Information Management Services, Office of Management, invites comments on the proposed information collection requests as required by the Paperwork Reduction Act of 1995.

DATES: An emergency review has been requested in accordance with the Act (44 U.S.C. Chapter 3507 (j)), since public harm is reasonably likely to result if normal clearance procedures are followed. Approval by the Office of Management and Budget (OMB) has been requested by July 19, 2007. A regular clearance process is also beginning. Interested persons are invited to submit comments on or before August 20, 2007.

ADDRESSES: Written comments regarding the emergency review should be addressed to the Office of Information and Regulatory Affairs, Attention: Nicole Cafarella, Desk Officer, Department of Education, Office of Management and Budget; 725 17th Street, NW., Room 10222, New Executive Office Building, Washington, DC 20503 or faxed to (202) 395–6974.

SUPPLEMENTARY INFORMATION: Section 3506 of the Paperwork Reduction Act of 1995 (44 U.S.C. Chapter 35) requires that the Director of OMB provide interested Federal agencies and the public an early opportunity to comment on information collection requests. The Office of Management and Budget (OMB) may amend or waive the requirement for public consultation to the extent that public participation in the approval process would defeat the purpose of the information collection, violate State or Federal law, or substantially interfere with any agency's ability to perform its statutory obligations. The Acting Leader, Information Management Case Services Team, Regulatory Information Management Services, Office of Management, publishes this notice containing proposed information collection requests at the beginning of the Departmental review of the information collection. Each proposed information collection, grouped by office, contains the following: (1) Type of review requested, e.g., new, revision, extension, existing or reinstatement; (2) Title; (3) Summary of the collection; (4) Description of the need for, and proposed use of, the information; (5) Respondents and frequency of collection; and (6) Reporting and/or Recordkeeping burden. ED invites public comment.

The Department of Education is especially interested in public comment addressing the following issues: (1) Is this collection necessary to the proper functions of the Department; (2) will this information be processed and used in a timely manner; (3) is the estimate of burden accurate; (4) how might the Department enhance the quality, utility, and clarity of the information to be collected; and (5) how might the Department minimize the burden of this collection on respondents, including through the use of information technology.

Dated: June 14, 2007.

James Hyler,

Acting Leader, Information Management Case Services Team,Regulatory Information Management Services,Office of Management.

Office of Postsecondary Education

Type of Review: New.

Title: Postsecondary Student Achievement and Institutional Performance Pilot Program.

Abstract: This is a new Special Focus Competition, administered by the Fund for the Improvement for Postsecondary Education (FIPSE). This competition will support at least one consortium of institutions of higher education, associations, public and private non-profit organizations and/or states to develop methods and implement mechanisms to systematically measure, assess and report student achievement and institutional performance at the postsecondary level.

Additional Information: Realizing how important the pilot grant is towards future developments, the Department looks to postsecondary institutions for their continuing input in this new endeavor.

Frequency: Annually

Affected Public:

Businesses or other for-profit; not-for-profit institutions; State, Local, or Tribal Gov't, SEAs or LEAs

Reporting and Recordkeeping Hour Burden:

Responses: 5

Burden Hours: 150

Requests for copies of the proposed information collection request may be accessed from *http://edicsweb.ed.gov,* by selecting the ''Browse Pending Collections'' link and by clicking on link number 3387. When you access the information collection, click on ''Download Attachments'' to view. Written requests for information should be addressed to U.S. Department of Education, 400 Maryland Avenue, SW., Potomac Center, 9th Floor, Washington, DC 20202–4700. Requests may also be electronically mailed to the Internet address *ICDocketMgr@ed.gov* or faxed to 202–245–6623. Please specify the complete title of the information collection when making your request.

Comments regarding burden and/or the collection activity requirements should be electronically mailed to *ICDocketMgr@ed.gov.* Individuals who use a telecommunications device for the deaf (TDD) may call the Federal Information Relay Service (FIRS) at 1–800–877–8339.

[FR Doc. E7–11860 Filed 6–19–07; 8:45 am]

BILLING CODE 4000–01–P

DEPARTMENT OF EDUCATION

Office of Innovation and Improvement; Overview Information; Charter Schools Program (CSP); Notice Inviting Applications for New Awards for Fiscal Year (FY) 2007

Catalog of Federal Domestic Assistance (CFDA) Numbers: 84.282B and 84.282C.

Dates:

Applications Available: June 20, 2007.

Deadline for Transmittal of Applications: August 6, 2007.

Deadline for Intergovernmental Review: September 5, 2007.

Full Text of Announcement

I. Funding Opportunity Description

Purpose of Program: The purpose of the CSP is to increase national understanding of the charter school model and to expand the number of high-quality charter schools available to students across the Nation by providing financial assistance for the planning, program design, and initial implementation of charter schools, and to evaluate the effects of charter schools, including their effects on students, student academic achievement, staff, and parents.

Non-State educational agency (non-SEA) eligible applicants that propose to use grant funds for planning, program design, and implementation must apply under CFDA No. 84.282B. Non-SEA eligible applicants that request funds for dissemination activities must submit their applications under CFDA No. 84.282C.

Priority: Under these competitions we are particularly interested in applications that address the following priority.

Invitational Priority: For FY 2007 this priority is an invitational priority. Under 34 CFR 75.105(c)(1), we do not give an applicant that meets this invitational priority a competitive or absolute preference over other applications.

This priority is:

The applicant proposes to plan, design, and implement, or in the case of a dissemination grant, disseminate information about, a high-quality charter high school in a geographic area in which a large proportion or number of public schools has been identified for improvement, corrective action, or restructuring under Title I, Part A of the Elementary and Secondary Education Act of 1965, as amended (ESEA).

Program Authority: 20 U.S.C. 7221–7221j.

Applicable Regulations: The Education Department General Administrative Regulations (EDGAR) in 34 CFR parts 75, 77, 79, 80, 81, 82, 84, 85, 86, 97, 98, and 99.

Note: The regulations in 34 CFR part 79 apply to all applicants except federally recognized Indian tribes.

Note: The regulations in 34 CFR part 86 apply only to institutions of higher education.

Note: The regulations in 34 CFR part 99 apply only to educational agencies or institutions.

II. Award Information

Type of Award: Discretionary grants.

Estimated Available Funds: $3,000,000.

Estimated Range of Awards: $130,000–$175,000 per year.

Estimated Average Size of Awards: $150,000 per year.

Estimated Number of Awards: 20–40.

Note: The Department is not bound by any estimates in this notice.

Project Period: Up to 36 months under CFDA No. 84.282B. Up to 24 months under CFDA No. 84.282C.

Note: Planning and implementation grants awarded by the Secretary to non-SEA eligible applicants will be awarded for a period of up to 36 months, no more than 18 months of which may be used for planning and program design and no more than two years of which may be used for the initial implementation of a charter school. Dissemination grants are awarded for a period of up to two years.

III. Eligibility Information

1. *Eligible Applicants:*

Planning and Initial Implementation (CFDA No. 84.282B): Non-SEA eligible applicants in States with a State statute specifically authorizing the establishment of charter schools and in which the SEA elects not to participate in the CSP or does not have an application approved under the CSP.

Note: *Eligible applicant* is defined in section 5210(3) of the ESEA. The following States currently have approved applications under the CSP: Alaska, Arkansas, California, Colorado, Connecticut, Delaware, District of Columbia, Florida, Georgia, Idaho, Illinois, Indiana, Kansas, Louisiana, Maryland, Massachusetts, Michigan, Minnesota, Missouri, Nevada, New Hampshire, New Jersey, New Mexico, New York, Ohio, Oregon, Pennsylvania, South Carolina, Tennessee, Texas, Utah, and Wisconsin. In these States, non-SEA eligible applicants interested in participating in the CSP should contact the SEA for information related to the State's CSP subgrant competition.

Dissemination (CFDA No. 84.282C): Charter schools, as defined in section 5210(1) of the ESEA.

Note: A charter school may apply for funds to carry out dissemination activities, whether or not the charter school previously applied for or received funds under the CSP for planning or implementation, if the charter school has been in operation for at least three consecutive years and has demonstrated overall success, including—

(1) Substantial progress in improving student academic achievement;

(2) High levels of parent satisfaction; and

(3) The management and leadership necessary to overcome initial start-up problems and establish a thriving, financially viable charter school.

2. *Cost Sharing or Matching:* These programs do not require cost sharing or matching.

IV. Application and Submission Information

Address to Request Application Package: Erin Pfeltz, U.S. Department of Education, 400 Maryland Avenue, SW., room 4W255, Washington, DC 20202–5970. Telephone: (202) 205–3525 or by e-mail: *erin.pfeltz@ed.gov.*

If you use a telecommunications device for the deaf (TDD), you may call the Federal Relay Service (FRS), toll free, at 1–800–877–8339.

Individuals with disabilities may obtain a copy of the application package in an alternative format (e.g., Braille, large print, audiotape, or computer diskette) by contacting the program contact person listed in this section.

2. *Content and Form of Application Submission:* Requirements concerning the content of an application, together with the forms you must submit, are in the application package for this program. Page Limit: The application narrative is where you, the applicant, address the selection criteria that reviewers use to evaluate your application. You must limit the application narrative (Part III) to the equivalent of no more than 50 pages, using the following standards:

- A ''page'' is 8.5″ x 11″, on one side only, with 1″ margins at the top, bottom, and both sides.
- Double space (no more than three lines per vertical inch) all text in the application narrative, including titles, headings, footnotes, quotations, references, and captions, as well as all text in charts, tables, figures, and graphs.
- Use a font that is either 12 point or larger or no smaller than 10 pitch (characters per inch).
- Use one of the following fonts: Times New Roman, Courier, Courier New, or Arial. An application submitted in any other font (including Times Roman or Arial Narrow) will not be accepted.

The page limit does not apply to Part I, the cover sheet; Part II, the budget section, including the narrative budget justification; Part IV, the assurances and certifications; or the one-page abstract, the resumes, the bibliography, or the letters of support. However, the page limit does apply to all of the application narrative section (Part III).

Our reviewers will not read any pages of your application that—

- Exceed the page limit if you apply these standards; or
- Exceed the equivalent of the page limit if you apply other standards.

3. *Submission Dates and Times: Applications Available:* June 20, 2007.

Deadline for Transmittal of Applications: August 6, 2007.

Applications for grants under this program must be submitted electronically using the Grants.gov. Apply site (Grants.gov). For information (including dates and times) about how to submit your application electronically, or in paper format by mail or hand delivery if you qualify for an exception to the electronic submission requirement, please refer to section IV. 6. *Other Submission Requirements* in this notice.

We do not consider an application that does not comply with the deadline requirements.

Individuals with disabilities who need an accommodation or auxiliary aid in connection with the application process should contact the person listed under **FOR FURTHER INFORMATION CONTACT** in section VII in this notice. If the Department provides an accommodation or auxiliary aid to an individual with a disability in connection with the application process, the individual's application remains subject to all other requirements and limitations in this notice. Deadline for Intergovernmental Review: September 5, 2007.

4. *Intergovernmental Review:* These competitions are subject to Executive Order 12372 and the regulations in 34 CFR part 79. Information about Intergovernmental Review of Federal Programs under Executive Order 12372 is in the application package for these competitions.

5. *Funding Restrictions: Use of Funds for Post-Award Planning and Design of the Educational Program and Initial Implementation of the Charter School.* A non-SEA eligible applicant receiving a grant under this program may use the grant funds only for—

(a) Post-award planning and design of the educational program, which may include (i) refinement of the desired educational results and of the methods for measuring progress toward achieving those results; and (ii) professional development of teachers and other staff who will work in the charter school; and

(b) Initial implementation of the charter school, which may include (i) informing the community about the school; (ii) acquiring necessary equipment and educational materials and supplies; (iii) acquiring or developing curriculum materials; and (iv) other initial operational costs that cannot be met from State or local sources.

Use of Funds for Dissemination Activities. A charter school may use these funds to assist other schools in adapting the charter school's program (or certain aspects of the charter school's program), or to disseminate information about the charter school through such activities as—

(a) Assisting other individuals with the planning and start-up of one or more new public schools, including charter schools, that are independent of the assisting charter school and the assisting charter school's developers and that agree to be held to at least as high a level of accountability as the assisting charter school;

(b) Developing partnerships with other public schools, including charter schools, designed to improve student performance in each of the schools participating in the partnership;

(c) Developing curriculum materials, assessments, and other materials that promote increased student achievement and are based on successful practices within the assisting charter school; and

(d) Conducting evaluations and developing materials that document the successful practices of the assisting charter school and that are designed to improve student performance in other schools.

We reference additional regulations outlining funding restrictions in the *Applicable Regulations* section in this notice.

6. *Other Submission Requirements:* Applications for grants under this program must be submitted electronically unless you qualify for an exception to this requirement in accordance with the instructions in this section.

a. *Electronic Submission of Applications.*

Applications for grants under the Charter Schools Program, CFDA Numbers 84.282B and 84.282C, must be submitted electronically using the Governmentwide Grants.gov. Apply site at *http://www.Grants.gov*. Through this site, you will be able to download a copy of the application package, complete it offline, and then upload and submit your application. You may not e-mail an electronic copy of a grant application to us.

We will reject your application if you submit it in paper format unless, as described elsewhere in this section, you qualify for one of the exceptions to the electronic submission requirement and submit, no later than two weeks before the application deadline date, a written statement to the Department that you qualify for one of these exceptions. Further information regarding calculation of the date that is two weeks before the application deadline date is provided later in this section under *Exception to Electronic Submission Requirement.*

You may access the electronic grant application for the Charter Schools Program at: *http://www.Grants.gov* You must search for the downloadable application package for this program by the CFDA number. Do not include the CFDA number's alpha suffix in your search (e.g., search for 84.282, not 84.282B or 84.282C).

Please note the following:

• When you enter the Grants.gov site, you will find information about submitting an application electronically through the site, as well as the hours of operation.

• Applications received by Grants.gov are date and time stamped. Your application must be fully uploaded and submitted and must be date and time stamped by the Grants.gov system no later than 4:30 p.m., Washington, DC time, on the application deadline date. Except as otherwise noted in this section, we will not consider your application if it is date and time stamped by the Grants.gov system later than 4:30 p.m., Washington, DC time, on the application deadline date. When we retrieve your application from Grants.gov, we will notify you if we are rejecting your application because it was date and time stamped by the Grants.gov system after 4:30 p.m., Washington, DC time, on the application deadline date.

• The amount of time it can take to upload an application will vary depending on a variety of factors, including the size of the application and the speed of your Internet connection. Therefore, we strongly recommend that you do not wait until the application deadline date to begin the submission process through Grants.gov.

• You should review and follow the Education Submission Procedures for submitting an application through Grants.gov that are included in the application package for this program to ensure that you submit your application in a timely manner to the Grants.gov system. You can also find the Education Submission Procedures pertaining to Grants.gov at *http://e-Grants.ed.gov/help/GrantsgovSubmissionProcedures.pdf*

• To submit your application via Grants.gov, you must complete all steps in the Grants.gov registration process (see *http://www.grants.gov/applicants/get_registered.jsp*). These steps include (1) registering your organization, a multi-part process that includes registration with the Central Contractor Registry (CCR); (2) registering yourself as an Authorized Organization Representative (AOR); and (3) getting authorized as an AOR by your organization. Details on these steps are outlined in the Grants.gov 3-Step Registration Guide (see *http://www.grants.gov/section910/Grants.govRegistrationBrochure.pdf*). You also must provide on your application the same D-U-N-S Number used with this registration. Please note that the registration process may take five or more business days to complete, and you must have completed all registration steps to allow you to submit successfully an application via Grants.gov. In addition you will need to update your CCR registration on an annual basis. This may take three or more business days to complete.

• You will not receive additional point value because you submit your application in electronic format, nor will we penalize you if you qualify for an exception to the electronic submission requirement, as described elsewhere in this section, and submit your application in paper format.

• You must submit all documents electronically, including all information you typically provide on the following forms: Application for Federal Assistance (SF 424), the Department of Education Supplemental Information for SF 424, Budget Information—Non-Construction Programs (ED 524), and all necessary assurances and certifications. Please note that two of these forms—the SF 424 and the Department of Education Supplemental Information for SF 424—have replaced the ED 424 (Application for Federal Education Assistance).

• You must attach any narrative sections of your application as files in a .DOC (document), .RTF (rich text), or .PDF (Portable Document) format. If you upload a file type other than the three file types specified in this paragraph or submit a password-protected file, we will not review that material.

• Your electronic application must comply with any page-limit requirements described in this notice.

• After you electronically submit your application, you will receive from Grants.gov an automatic notification of receipt that contains a Grants.gov tracking number. (This notification indicates receipt by Grants.gov only, not receipt by the Department.) The Department then will retrieve your application from Grants.gov and send a second notification to you by e-mail. This second notification indicates that the Department has received your application and has assigned your application a PR/Award number (an ED-specified identifying number unique to your application).

• We may request that you provide us original signatures on forms at a later date. *Application Deadline Date Extension in Case of Technical Issues with the Grants.gov System:* If you are experiencing problems submitting your application through Grants.gov, please contact the Grants.gov Support Desk, toll free, at 1–800–518–4726. You must obtain a Grants.gov Support Desk Case Number and must keep a record of it.

If you are prevented from electronically submitting your application on the application deadline date because of technical problems with the Grants.gov system, we will grant you an extension until 4:30 p.m., Washington, DC time, the following business day to enable you to transmit your application electronically or by hand delivery. You also may mail your application by following the mailing instructions described elsewhere in this notice.

If you submit an application after 4:30 p.m., Washington, DC time, on the application deadline date, please contact the person listed under **FOR FURTHER INFORMATION CONTACT** in section VII in this notice and provide an explanation of the technical problem you experienced with Grants.gov, along with the Grants.gov Support Desk Case Number. We will accept your application if we can confirm that a technical problem occurred with the Grants.gov system and that that problem affected your ability to submit your application by 4:30 p.m., Washington, DC time, on the application deadline date. The Department will contact you after a determination is made on whether your application will be accepted.

Note: The extensions to which we refer in this section apply only to the unavailability of, or technical problems with, the Grants.gov system. We will not grant you an extension if you failed to fully register to submit your application to Grants.gov before the application deadline date and time or if the technical problem you experienced is unrelated to the Grants.gov system.

Exception to Electronic Submission Requirement: You qualify for an exception to the electronic submission requirement, and may submit your application in paper format, if you are unable to submit an application through the Grants.gov system because—

• You do not have access to the Internet; or

• You do not have the capacity to upload large documents to the Grants.gov system; and

• No later than two weeks before the application deadline date (14 calendar days or, if the fourteenth calendar day before the application deadline date falls on a Federal holiday, the next business day following the Federal holiday), you mail or fax a written statement to the Department, explaining which of the two grounds for an exception prevent you from using the Internet to submit your application.

If you mail your written statement to the Department, it must be postmarked no later than two weeks before the application deadline date. If you fax your written statement to the Department, we must receive the faxed

statement no later than two weeks before the application deadline date.

Address and mail or fax your statement to: Erin Pfeltz, U.S. Department of Education, 400 Maryland Avenue, SW., room 4W255, Washington, DC 20202–5970. FAX: (202) 205–5630.

Your paper application must be submitted in accordance with the mail or hand delivery instructions described in this notice.

b. *Submission of Paper Applications by Mail.*

If you qualify for an exception to the electronic submission requirement, you may mail (through the U.S. Postal Service or a commercial carrier) your application to the Department. You must mail the original and two copies of your application, on or before the application deadline date, to the Department at the applicable following address:

By mail through the U.S. Postal Service:

U.S. Department of Education, Application Control Center, *Attention:* (CFDA Number 84.282B or 84.282C),400 Maryland Avenue, SW.,Washington, DC 20202–4260. or

By mail through a commercial carrier:

U.S. Department of Education, Application Control Center, Stop 4260, *Attention:* (CFDA Number 84.282B or 84.282C),7100 Old Landover Road,Landover, MD 20785–1506.

Regardless of which address you use, you must show proof of mailing consisting of one of the following:

(1) A legibly dated U.S. Postal Service postmark.

(2) A legible mail receipt with the date of mailing stamped by the U.S. Postal Service.

(3) A dated shipping label, invoice, or receipt from a commercial carrier.

(4) Any other proof of mailing acceptable to the Secretary of the U.S. Department of Education.

If you mail your application through the U.S. Postal Service, we do not accept either of the following as proof of mailing:

(1) A private metered postmark.

(2) A mail receipt that is not dated by the U.S. Postal Service.

If your application is postmarked after the application deadline date, we will not consider your application.

Note: The U.S. Postal Service does not uniformly provide a dated postmark. Before relying on this method, you should check with your local post office.

c. *Submission of Paper Applications by Hand Delivery.*

If you qualify for an exception to the electronic submission requirement, you (or a courier service) may deliver your paper application to the Department by hand. You must deliver the original and two copies of your application by hand, on or before the application deadline date, to the Department at the following address: U.S. Department of Education, Application Control Center, *Attention*: (CFDA Number 84.282B or 84.282C), 550 12th Street, SW.,Room 7041, Potomac Center Plaza, Washington, DC 20202–4260.

The Application Control Center accepts hand deliveries daily between 8 a.m. and 4:30 p.m., Washington, DC time, except Saturdays, Sundays, and Federal holidays.

*Note for Mail or Hand Delivery of Paper Applications:*If you mail or hand deliver your application to the Department—

(1) You must indicate on the envelope and—if not provided by the Department—in Item 11 of the SF 424 the CFDA number, including suffix letter, if any, of the competition under which you are submitting your application; and

(2) The Application Control Center will mail to you a notification of receipt of your grant application. If you do not receive this notification within 15 business days from the application deadline date, you should call the U.S. Department of Education Application Control Center at (202) 245–6288.

V. Application Review Information

Selection Criteria: Non-SEA eligible applicants applying for CSP grant funds must address both the statutory application requirements and the selection criteria described in the following paragraphs. Each applicant applying for CSP grant funds may choose to respond to the application requirements in the context of its responses to the selection criteria.

The statutory application requirements for all applicants submitting under CFDA Nos. 84.282B and 84.282C are listed in paragraph (a) in this section.

The selection criteria for non-SEA applicants for *Planning, Program Design, and Implementation Grants (CFDA No. 84.282B)* are listed in paragraph (b) in this section.

The selection criteria for non-SEA applicants for *Dissemination Grants (CFDA No. 84.282C)* are listed in paragraph (c) in this section.

(a) *Application Requirements (CFDA Nos. 84.282B and 84.282C).* (i) Describe the educational program to be implemented by the proposed charter school, including how the program will enable all students to meet challenging State student academic achievement standards, the grade levels or ages of students to be served, and the curriculum and instructional practices to be used;

(ii) Describe how the charter school will be managed;

(iii) Describe the objectives of the charter school and the methods by which the charter school will determine its progress toward achieving those objectives;

(iv) Describe the administrative relationship between the charter school and the authorized public chartering agency;

(v) Describe how parents and other members of the community will be involved in the planning, program design, and implementation of the charter school;

(vi) Describe how the authorized public chartering agency will provide for continued operation of the charter school once the Federal grant has expired, if that agency determines that the charter school has met its objectives;

(vii) If the charter school desires the Secretary to consider waivers under the authority of the CSP, include a request and justification for waivers of any Federal statutory or regulatory provisions that the applicant believes are necessary for the successful operation of the charter school and a description of any State or local rules, generally applicable to public schools, that will be waived for, or otherwise not apply to, the school;

(viii) Describe how the grant funds will be used, including how these funds will be used in conjunction with other Federal programs administered by the Secretary;

(ix) Describe how students in the community will be informed about the charter school and be given an equal opportunity to attend the charter school;

(x) Describe how a charter school that is considered an LEA under State law, or an LEA in which a charter school is located, will comply with sections 613(a)(5) and 613(e)(1)(B) of the Individuals with Disabilities Education Act; and

(xi) If the eligible applicant desires to use grant funds for dissemination activities under section 5202(c)(2)(C) of the ESEA, describe those activities and how those activities will involve charter schools and other public schools, LEAs, developers, and potential developers.

(b) *Selection Criteria (CFDA No. 84.282B).* The following selection criteria are from section 5204 of the ESEA and 34 CFR 75.210 of EDGAR.

The maximum possible score for all the criteria in this section is 130 points.

The maximum possible score for each criterion is indicated in parentheses following the criterion.

In evaluating an application from a non-SEA eligible applicant for Planning, Program Design, and Implementation, the Secretary considers the following criteria:

(i) The quality of the proposed curriculum and instructional practices (20 points).

Note: The Secretary encourages the applicant to describe the educational program to be implemented by the proposed charter school, including how the program will enable all students to meet challenging State student academic achievement standards, the grade levels or ages of students to be served, and the curriculum and instructional practices to be used.

(ii) The degree of flexibility afforded by the SEA and, if applicable, the LEA to the charter school (10 points).

Note: The Secretary encourages the applicant to include a description of how the State's law establishes an administrative relationship between the charter school and the authorized public chartering agency and exempts the charter school from significant State or local rules that inhibit the flexible operation and management of public schools.

The Secretary also encourages the applicant to include a description of the degree of autonomy the charter school will have over such matters as the charter school's budget, expenditures, daily operation, and personnel in accordance with its State's charter school law.

(iii) The extent of community support for the application (20 points).

Note: The Secretary encourages the applicant to describe how parents and other members of the community will be informed about the charter school, and how students will be given an equal opportunity to attend the charter school.

(iv) The ambitiousness of the objectives for the charter school (10 points).

Note: The Secretary encourages the applicant to describe the objectives for the charter school and how these grant funds will be used, including how these funds will be used in conjunction with other Federal programs administered by the Secretary, in meeting these objectives.

(v) The quality of the strategy for assessing achievement of those objectives (20 points).

(vi) The likelihood that the charter school will meet those objectives and improve educational results for students during and after the period of Federal financial assistance (10 points).

(vii) The extent to which the proposed project encourages parental involvement (10 points).

Note: The Secretary encourages the applicant to describe how parents and other members of the community will be involved in the planning, program design, and implementation of the charter school.

(viii) The quality of the personnel who will carry out the proposed project. In determining the quality of project personnel, the Secretary considers the qualifications, including relevant training and experience, of the project director; and the extent to which the applicant encourages applications for employment from persons who are members of groups that have traditionally been underrepresented based on race, color, national origin, gender, age, or disability (10 points).

(ix) The contribution the charter school will make in assisting educationally disadvantaged and other students to achieve to State academic content standards and State student academic achievement standards (20 points).

(c) *Selection Criteria (CFDA No. 84.282C).* The following selection criteria are from section 5204 of the ESEA and 34 CFR 75.210 of EDGAR.

The maximum possible score for all the criteria in this section is 110 points.

The maximum possible score for each criterion is indicated in parentheses following the criterion.

In evaluating an application from a non-SEA eligible applicant for a dissemination grant, the Secretary considers the following criteria:

(i) The quality of the proposed dissemination activities and the likelihood that those activities will improve student achievement (30 points).

Note: The Secretary encourages the applicant to describe the objectives for the proposed dissemination activities and the methods by which the charter school will determine its progress toward achieving those objectives.

(ii) The extent to which the school has demonstrated overall success, including—

(1) Substantial progress in improving student achievement (10 points);

(2) High levels of parent satisfaction (10 points); and

(3) The management and leadership necessary to overcome initial start-up problems and establish a thriving, financially viable charter school (10 points).

(iii) The extent to which the results of the proposed project will be disseminated in a manner that will enable others to use the information or strategies (20 points).

(iv) The quality of the personnel who will carry out the proposed project. In determining the quality of project personnel, the Secretary considers the qualifications, including relevant training and experience, of the project director and the extent to which the applicant encourages applications for employment from persons who are members of groups that have traditionally been underrepresented based on race, color, national origin, gender, age, or disability (10 points).

(v) The quality of the management plan for the proposed project. In determining the quality of the management plan for the proposed project, the Secretary considers the adequacy of the management plan to achieve the objectives of the proposed project on time and within budget, including clearly defined responsibilities, timelines, and milestones for accomplishing project tasks (20 points).

VI. Award Administration Information

1. *Award Notices:* If your application is successful, we will notify your U.S. Representative and U.S. Senators and send you a Grant Award Notice (GAN). We may notify you informally, also.

If your application is not evaluated or not selected for funding, we notify you.

2. *Administrative and National Policy Requirements:* We identify administrative and national policy requirements in the application package and reference these and other requirements in the *Applicable Regulations* section of this notice.

We reference the regulations outlining the terms and conditions of an award in the *Applicable Regulations* section of this notice and include these and other specific conditions in the GAN. The GAN also incorporates your approved application as part of your binding commitments under the grant.

3. *Reporting:* At the end of your project period, you must submit a final performance report, including financial information, as directed by the Secretary. If you receive a multi-year award, you must submit an annual performance report that provides the most current performance and financial expenditure information as directed by the Secretary under 34 CFR 75.118. The Secretary may also require more frequent performance reports under 34 CFR 75.720(c). For specific requirements on reporting, please go to *http://www.ed.gov/fund/grant/apply/appforms/appforms.html*.

4. *Performance Measures:* The goal of the CSP is to support the creation and development of a large number of high-quality charter schools that are free from State or local rules that inhibit flexible operation, are held accountable for enabling students to reach challenging State performance standards, and are

open to all students. The Secretary has set three performance indicators to measure this goal: (1) The number of States, including the District of Columbia and Puerto Rico, with charter school laws, (2) the number of charter schools in operation around the Nation, and (3) the percentage of charter school students who are achieving at or above the proficient level on State examinations in mathematics and reading. Additionally, the Secretary has established the following measure to examine the efficiency of the CSP: Federal cost per student in implementing a successful school (defined as a school in operation for three or more consecutive years).

These measures constitute the Department's indicators of success for these programs. Consequently, we advise an applicant for a grant under these programs to give careful consideration to these measures in conceptualizing the approach and evaluation for its proposed project. Each grantee will be required to provide, in its annual performance and final reports, data about its progress in meeting these measures.

VII. Agency Contact

FOR FURTHER INFORMATION CONTACT: Erin Pfeltz, U.S. Department of Education, 400 Maryland Avenue, SW., room 4W255, Washington, DC 20202–5970. Telephone: (202) 205–3525 or by e–mail: *erin.pfeltz@ed.gov.*

If you use a TDD, call the FRS at, toll-free, at 1–800–877–8339.

VIII. Other Information

Alternative Format: Individuals with disabilities can obtain this document and a copy of the application package in an alternative format (*e.g.*, Braille, large print, audiotape, or computer diskette) on request to the program contact person listed under **FOR FURTHER INFORMATION CONTACT** in section VII in this notice.

Electronic Access to This Document: You can view this document, as well as all other documents of this Department published in the **Federal Register**, in text or Adobe Portable Document Format (PDF) on the Internet at the following site: *http://www.ed.gov/news/fedregister.*

To use PDF you must have Adobe Acrobat Reader, which is available free at this site. If you have questions about using PDF, call the U.S. Government Printing Office (GPO), toll free, at 1–888–293–6498; or in the Washington, DC, area at (202) 512–1530.

Note: The official version of this document is the document published in the **Federal Register**. Free Internet access to the official edition of the **Federal Register** and the Code of Federal Regulations is available on GPO Access at: *http://www.gpoaccess.gov/nara/index.html.*

Dated: June 13, 2007.

Morgan S. Brown,

Assistant Deputy Secretary for Innovation and Improvement.

[FR Doc. E7–11712 Filed 6–19–07; 8:45 am]

BILLING CODE 4000–01–P

DEPARTMENT OF ENERGY

[OE Docket No. EA–212–C]

Application To Export Electric Energy; Coral Power, L.L.C.

AGENCY: Office of Electricity Delivery and Energy Reliability, DOE.

ACTION: Notice of application.

SUMMARY: Coral Power, L.L.C. (Coral) has applied to renew its authority to transmit electric energy from the United States to Mexico pursuant to section 202(e) of the Federal Power Act (FPA).

DATES: Comments, protests or requests to intervene must be submitted on or before July 20, 2007.

ADDRESSES: Comments, protests or requests to intervene should be addressed as follows: Office of Electricity Delivery and Energy Reliability, Mail Code: OE–20, U.S. Department of Energy, 1000 Independence Avenue, SW., Washington, DC 20585–0350 (Fax: 202–586–8008).

FOR FURTHER INFORMATION CONTACT: Ellen Russell (Program Office) 202–586–9624 or Michael Skinker (Program Attorney) 202–586–2793.

SUPPLEMENTARY INFORMATION: Exports of electricity from the United States to a foreign country are regulated by the Department of Energy (DOE) pursuant to sections 301(b) and 402(f) of the Department of Energy Organization Act (42 U.S.C. 7151(b), 7172(f)) and require authorization under section 202(e) of the FPA (16 U.S.C. 824a(e)).

On June 9, 1999, the Department of Energy (DOE) issued Order No. EA–212 authorizing Coral to transmit electric energy from the United States to Mexico as a power marketer for a two-year term. On August 13, 2001, in Order No. EA–212–A, DOE renewed that authorization for a two-year term. On July 8, 2002, Coral filed an application with DOE to amend the existing export authorization contained in Order No. EA–212–A to add a list of authorized export points. On August 26, 2002, in Order No. EA–212–B, DOE renewed that authorization for a five-year term. That authorization will expire on August 26, 2007.

On May 31, 2007, Coral filed an application with DOE to renew the export authority contained in Order No. EA–212–B for an additional five-year term and requested expedited treatment of the application so that its authorization will not lapse. Coral does not own or control any transmission or distribution assets, nor does it have a franchised service area. The electric energy which Coral proposes to export to Mexico would be purchased from electric utilities and Federal power marketing agencies within the United States.

Coral will arrange for the delivery of exports to Mexico over the international transmission facilities currently owned by San Diego Gas and Electric Company, El Paso Electric Company, Central Power and Light Company, and Comision Federal de Electricidad, the national utility of Mexico.

The construction, operation, maintenance, and connection of each of the international transmission facilities to be utilized by Coral has previously been authorized by a Presidential permit issued pursuant to Executive Order 10485, as amended.

Procedural Matters: Any person desiring to become a party to this proceeding or to be heard by filing comments or protests to this application should file a petition to intervene, comment or protest at the address provided above in accordance with §§ 385.211 or 385.214 of the Federal Energy Regulatory Commission's Rules of Practice and Procedures (18 CFR 385.211, 385.214). Fifteen copies of each petition and protest should be filed with DOE on or before the date listed above.

Comments on the Coral application to export electric energy to Mexico should be clearly marked with Docket No. EA–212–C. Additional copies are to be filed directly with Robert Reilley, Vice President, Regulatory Affairs, Coral Power, L.L.C., 909 Fannin, Plaza Level One, Houston, TX 77010 and Jane Barnett, Regulatory analyst, Coral Power, L.L.C., 909 Fannin, Plaza Level One, Houston, TX 77010.

A final decision will be made on this application after the environmental impacts have been evaluated pursuant to the National Environmental Policy Act of 1969, and a determination is made by the DOE that the proposed action will not adversely impact on the reliability of the U.S. electric power supply system.

Copies of this application will be made available, upon request, for public inspection and copying at the address provided above or by accessing the

program's Home Page at *http://www.oe.energy.gov/304.htm.*

Issued in Washington, DC, on June 14, 2007.

Anthony J. Como,

Director, Permitting and Siting Office of Electricity Delivery and Energy Reliability.

[FR Doc. E7–11917 Filed 6–19–07; 8:45 am]

BILLING CODE 6450–01–P

DEPARTMENT OF ENERGY

[OE Docket No. EA–210–B]

Application To Export Electric Energy; PPL EnergyPlus, LLC

AGENCY: Office of Electricity Delivery and Energy Reliability, DOE.

ACTION: Notice of application.

SUMMARY: PPL EnergyPlus, LLC (PPL EnergyPlus) has applied to renew its authority to transmit electric energy from the United States to Canada pursuant to section 202(e) of the Federal Power Act (FPA).

DATES: Comments, protests or requests to intervene must be submitted on or before July 20, 2007.

ADDRESSES: Comments, protests or requests to intervene should be addressed as follows: Office of Electricity Delivery and Energy Reliability, Mail Code: OE–20, U.S. Department of Energy, 1000 Independence Avenue, SW., Washington, DC 20585–0350 (FAX 202–586–8008).

FOR FURTHER INFORMATION CONTACT: Ellen Russell (Program Office) 202–586–9624 or Michael Skinker (Program Attorney) 202–586–2793.

SUPPLEMENTARY INFORMATION: Exports of electricity from the United States to a foreign country are regulated by the Department of Energy (DOE) pursuant to sections 301(b) and 402(f) of the Department of Energy Organization Act (42 U.S.C. 7151(b), 7172(f)) and require authorization under section 202(e) of the FPA (16 U.S.C. 824a(e)).

On July 19, 1999, the Department of Energy (DOE) issued Order No. EA–210 authorizing PPL EnergyPlus to transmit electric energy from the United States to Canada as a power marketer for a two-year term. On November 13, 2001, in Order No. EA–210–A, DOE renewed that authorization for a five-year term. That Order expired on November 13, 2006.

On March 24, 2007, PPL EnergyPlus filed an application with DOE to renew the export authority contained in Order No. EA–210–A for an additional five-year term. PPL EnergyPlus does not own or control any transmission or distribution assets, nor does it have a franchised service area. The electric energy which PPL EnergyPlus proposes to export to Canada would be purchased from electric utilities and Federal power marketing agencies within the United States.

PPL EnergyPlus will arrange for the delivery of exports to Canada over the international transmission facilities currently owned by Basin Electric Power Cooperative, Bonneville Power Administration, Eastern Maine Electric Cooperative, International Transmission Co., Joint Owners of the Highgate Project, Long Sault, Inc., Maine Electric Power Company, Maine Public Service Company, Minnesota Power, Inc., Minnkota Power Cooperative, Inc., New York Power Authority, Niagara Mohawk Power Corp., Northern States Power Company, and Vermont Electric Transmission Co.

The construction, operation, maintenance, and connection of each of the international transmission facilities to be utilized by PPL EnergyPlus has previously been authorized by a Presidential permit issued pursuant to Executive Order 10485, as amended.

Procedural Matters: Any person desiring to become a party to this proceeding or to be heard by filing comments or protests to this application should file a petition to intervene, comment or protest at the address provided above in accordance with §§ 385.211 or 385.214 of the Federal Energy Regulatory Commission's Rules of Practice and Procedures (18 CFR 385.211, 385.214). Fifteen copies of each petition and protest should be filed with DOE on or before the date listed above.

Comments on the PPL EnergyPlus application to export electric energy to Canada should be clearly marked with Docket No. EA–210–B. Additional copies are to be filed directly with Jesse A. Dillon, Esq., Senior Counsel, PPL Services Corporation, Two North Ninth Street, Allentown, PA 18101 AND Sandra E. Rizzo, Esq., Bracewell & Giuliani LLP, 2000 K Street, NW., Suite 500, Washington, DC 20006.

A final decision will be made on this application after the environmental impacts have been evaluated pursuant to the National Environmental Policy Act of 1969, and a determination is made by the DOE that the proposed action will not adversely impact on the reliability of the U.S. electric power supply system.

Copies of this application will be made available, upon request, for public inspection and copying at the address provided above or by accessing the program's Home Page at *http://www.oe.energy.gov/304.htm.*

Issued in Washington, DC, on June 14, 2007.

Anthony J. Como,

Director, Permitting and Siting Office of Electricity Delivery and Energy Reliability.

[FR Doc. E7–11920 Filed 6–19–07; 8:45 am]

BILLING CODE 6450–01–P

DEPARTMENT OF ENERGY

Environmental Management Site-Specific Advisory Board, Nevada

AGENCY: Department of Energy.

ACTION: Notice of open meeting.

SUMMARY: This notice announces a meeting of the Environmental Management Site-Specific Advisory Board (EM SSAB), Nevada Test Site. The Federal Advisory Committee Act (Pub. L. 92–463, 86 Stat. 770) requires that public notice of this meeting be announced in the **Federal Register**.

DATES: Wednesday, July 11, 2007—5 p.m.

ADDRESSES: 7710 West Cheyenne Avenue, Conference Room #130, Las Vegas, Nevada.

FOR FURTHER INFORMATION CONTACT: Kelly Snyder, Deputy Designated Federal Officer, P.O. Box 98518, Las Vegas, Nevada 89193. Phone: (702) 295–2836; E-mail: *snyderk@nv.doe.gov*.

SUPPLEMENTARY INFORMATION:

Purpose of the Board: The purpose of the Board is to make recommendations to DOE in the areas of environmental restoration, waste management, and related activities.

Tentative Agenda:

1. Briefing on ''Operation Clean Desert''
2. Transuranic Waste Update
3. Updates by the Board's working committees

Public Participation: The meeting is open to the public. Written statements may be filed with the Board either before or after the meeting. Individuals who wish to make oral presentations pertaining to agenda items should contact Kelly Snyder at the telephone number listed above. The request must be received five days prior to the meeting and reasonable provision will be made to include the presentation in the agenda. The Deputy Designated Federal Officer is empowered to conduct the meeting in a fashion that will facilitate the orderly conduct of business. Individuals wishing to make public comment will be provided a maximum of five minutes to present their comments.

Minutes: The minutes of this meeting will be available for public review and

copying at the U.S. Department of Energy's Freedom of Information Public Reading Room, 1E–190, Forrestal Building, 1000 Independence Avenue, SW, Washington, DC 20585 between 9 a.m. and 4 p.m., Monday through Friday, except Federal holidays. Minutes will also be available by writing to Kelly Snyder at the address listed above.

Issued at Washington, DC on June 14, 2007.

Rachel Samuel,

Deputy Advisory Committee Management Officer.

[FR Doc. E7–11913 Filed 6–19–07; 8:45 am]

BILLING CODE 6450–01–P

DEPARTMENT OF ENERGY

Federal Energy Regulatory Commission

[Docket No. RP00–445–019]

Alliance Pipeline L.P.; Notice of Negotiated Rates

June 13, 2007.

Take notice that on June 11, 2007, Alliance Pipeline L.P. (Alliance) tendered for filing Seventh Revised Sheet No. 12, as part of its FERC Gas Tariff, Original Volume No. 1, proposed to become effective June 1, 2007.

Any person desiring to intervene or to protest this filing must file in accordance with Rules 211 and 214 of the Commission's Rules of Practice and Procedure (18 CFR 385.211 and 385.214). Protests will be considered by the Commission in determining the appropriate action to be taken, but will not serve to make protestants parties to the proceeding. Any person wishing to become a party must file a notice of intervention or motion to intervene, as appropriate. Such notices, motions, or protests must be filed in accordance with the provisions of Section 154.210 of the Commission's regulations (18 CFR 154.210). Anyone filing an intervention or protest must serve a copy of that document on the Applicant. Anyone filing an intervention or protest on or before the intervention or protest date need not serve motions to intervene or protests on persons other than the Applicant.

The Commission encourages electronic submission of protests and interventions in lieu of paper using the ''eFiling'' link at *http://www.ferc.gov.* Persons unable to file electronically should submit an original and 14 copies of the protest or intervention to the Federal Energy Regulatory Commission, 888 First Street, NE., Washington, DC 20426.

This filing is accessible on-line at *http://www.ferc.gov,* using the ''eLibrary'' link and is available for review in the Commission's Public Reference Room in Washington, DC. There is an ''eSubscription'' link on the Web site that enables subscribers to receive e-mail notification when a document is added to a subscribed docket(s). For assistance with any FERC Online service, please e-mail *FERCOnlineSupport@ferc.gov,* or call (866) 208–3676 (toll free). For TTY, call (202) 502–8659.

Kimberly D. Bose,

Secretary.

[FR Doc. E7–11868 Filed 6–19–07; 8:45 am]

BILLING CODE 6717–01–P

DEPARTMENT OF ENERGY

Federal Energy Regulatory Commission

[Docket Nos. CP07–394–000]

Colorado Interstate Gas Company; Notice of Application

June 13, 2007.

Take notice that on June 4, 2007 Colorado Interstate Gas Company (Colorado), Post Office Box 1087, Colorado Springs, Colorado, 80944, filed in Docket No. CP07–394–000, an application pursuant to section 7(b) of the Natural Gas Act (NGA), to abandon, in place, two compressor units at CIG's Lakin Compressor Station in Kearny County, Kansas, all as more fully set forth in the application on file with the Commission and open to public inspection. This filing may also be viewed on the Commission's Web site at *http://www.ferc.gov* using the ''eLibrary'' link. Enter the docket number, excluding the last three digits, in the docket number field to access the document. For assistance, call (202) 502–8659 or TTY, (202) 208–3676.

Any questions regarding this application should be directed to Richard Derryberry, Director, Regulatory Affairs Department, Colorado Interstate Gas Company, Post Office Box 1087 Colorado Springs, Colorado 80904, telephone (719) 520–3782

Pursuant to § 157.9 of the Commission's rules, 18 CFR 157.9, within 90 days of this Notice the Commission staff will either: Complete its environmental assessment (EA) and place it into the Commission's public record (eLibrary) for this proceeding; or issue a Notice of Schedule for Environmental Review. If a Notice of Schedule for Environmental Review is issued, it will indicate, among other milestones, the anticipated date for the Commission staff's issuance of the final environmental impact statement (FEIS) or EA for this proposal. The filing of the EA in the Commission's public record for this proceeding or the issuance of a Notice of Schedule for Environmental Review will serve to notify federal and state agencies of the timing for the completion of all necessary reviews, and the subsequent need to complete all Federal authorizations within 90 days of the date of issuance of the Commission staff's FEIS or EA.

There are two ways to become involved in the Commission's review of this project. First, any person wishing to obtain legal status by becoming a party to the proceedings for this project should, on or before the comment date stated below, file with the Federal Energy Regulatory Commission, 888 First Street, NE., Washington, DC 20426, a motion to intervene in accordance with the requirements of the Commission's Rules of Practice and Procedure (18 CFR 385.214 or 385.211) and the Regulations under the NGA (18 CFR 157.10). A person obtaining party status will be placed on the service list maintained by the Secretary of the Commission and will receive copies of all documents filed by the applicant and by all other parties. A party must submit 14 copies of filings made with the Commission and must mail a copy to the applicant and to every other party in the proceeding. Only parties to the proceeding can ask for court review of Commission orders in the proceeding.

However, a person does not have to intervene in order to have comments considered. The second way to participate is by filing with the Secretary of the Commission, as soon as possible, an original and two copies of comments in support of or in opposition to this project. The Commission will consider these comments in determining the appropriate action to be taken, but the filing of a comment alone will not serve to make the filer a party to the proceeding. The Commission's rules require that persons filing comments in opposition to the project provide copies of their protests only to the party or parties directly involved in the protest.

Persons who wish to comment only on the environmental review of this project should submit an original and two copies of their comments to the Secretary of the Commission. Environmental commentors will be placed on the Commission's environmental mailing list, will receive copies of the environmental documents, and will be notified of meetings associated with the Commission's

environmental review process. Environmental commentors will not be required to serve copies of filed documents on all other parties. However, the non-party commentors will not receive copies of all documents filed by other parties or issued by the Commission (except for the mailing of environmental documents issued by the Commission) and will not have the right to seek court review of the Commission's final order.

The Commission strongly encourages electronic filings of comments, protests and interventions in lieu of paper using the ''eFiling'' link at *http://www.ferc.gov.* Persons unable to file electronically should submit an original and 14 copies of the protest or intervention to the Federal Energy regulatory Commission, 888 First Street, NE., Washington, DC 20426.

This filing is accessible on-line at *http://www.ferc.gov,* using the ''eLibrary'' link and is available for review in the Commission's Public Reference Room in Washington, DC. There is an ''eSubscription'' link on the Web site that enables subscribers to receive e-mail notification when a document is added to a subscribed docket(s). For assistance with any FERC Online service, please e-mail *FERCOnlineSupport@ferc.gov,* or call (866) 208–3676 (toll free). For TTY, call (202) 502–8659.

Comment Date: 5 p.m. Eastern Time on July 5, 2007.

Kimberly D. Bose,

Secretary.

[FR Doc. E7–11874 Filed 6–19–07; 8:45 am]

BILLING CODE 6717–01–P

DEPARTMENT OF ENERGY

Federal Energy Regulatory Commission

[Docket No. CP06–1–004]

Florida Gas Transmission Company, LLC; Notice of Compliance Filing

June 13, 2007.

Take notice that on June 7, 2007, Florida Gas Transmission Company, LLC (FGT) submitted a compliance filing pursuant to the Commission's Letter Order dated May 25, 2007 in the subject docket. FGT requests a May 1, 2007 effective date for the following tariff sheets as part of its FERC Gas Tariff, Fourth Revised Volume No. 1:

Substitute First Revised Sheet No. 206
Substitute Original Sheet No. 206A

FGT states that copies of the filing were served on parties on the official service list in the above captioned proceeding.

Any person desiring to protest this filing must file in accordance with Rule 211 of the Commission's Rules of Practice and Procedure (18 CFR 385.211). Protests to this filing will be considered by the Commission in determining the appropriate action to be taken, but will not serve to make protestants parties to the proceeding. Such protests must be filed on or before the date as indicated below. Anyone filing a protest must serve a copy of that document on all the parties to the proceeding.

The Commission encourages electronic submission of protests in lieu of paper using the ''eFiling'' link at *http://www.ferc.gov.* Persons unable to file electronically should submit an original and 14 copies of the protest to the Federal Energy Regulatory Commission, 888 First Street, NE., Washington, DC 20426.

This filing is accessible on-line at *http://www.ferc.gov*, using the ''eLibrary'' link and is available for review in the Commission's Public Reference Room in Washington, DC. There is an ''eSubscription'' link on the Web site that enables subscribers to receive e-mail notification when a document is added to a subscribed docket(s). For assistance with any FERC Online service, please e-mail *FERCOnlineSupport@ferc.gov,* or call (866) 208–3676 (toll free). For TTY, call (202) 502–8659.

Comment Date: 5 p.m. Eastern Time on June 28, 2007.

Kimberly D. Bose,

Secretary.

[FR Doc. E7–11870 Filed 6–19–07; 8:45 am]

BILLING CODE 6717–01–P

DEPARTMENT OF ENERGY

Federal Energy Regulatory Commission

[Docket Nos. EC07–89–001, ER07–887–001]

ITC Holdings Corp., ITC Midwest LLC, Interstate Power and Light Company, Midwest Independent Transmission, System Operator, Inc.; Notice of Filing

June 13, 2007.

Take notice that on June 5, 2007, ITC Holdings Corp., ITC Midwest LLC, Interstate Power and Light Company, Midwest Independent Transmission System Operator, Inc. filed an amendment to their joint application filed with the Commission on May 11, 2007. The amendments apply to Exhibit No. IT–4, Dr. Jonathan Lesser's testimony and page 42 of the joint application.

Any person desiring to intervene or to protest this filing must file in accordance with Rules 211 and 214 of the Commission's Rules of Practice and Procedure (18 CFR 385.211, 385.214). Protests will be considered by the Commission in determining the appropriate action to be taken, but will not serve to make protestants parties to the proceeding. Any person wishing to become a party must file a notice of intervention or motion to intervene, as appropriate. Such notices, motions, or protests must be filed on or before the comment date. Anyone filing a motion to intervene or protest must serve a copy of that document on the Applicant and all the parties in this proceeding.

The Commission encourages electronic submission of protests and interventions in lieu of paper using the ''eFiling'' link at *http://www.ferc.gov.* Persons unable to file electronically should submit an original and 14 copies of the protest or intervention to the Federal Energy Regulatory Commission, 888 First Street, NE., Washington, DC 20426.

This filing is accessible on-line at *http://www.ferc.gov,* using the ''eLibrary'' link and is available for review in the Commission's Public Reference Room in Washington, DC. There is an ''eSubscription'' link on the Web site that enables subscribers to receive e-mail notification when a document is added to a subscribed docket(s). For assistance with any FERC Online service, please e-mail *FERCOnlineSupport@ferc.gov,* or call (866) 208–3676 (toll free). For TTY, call (202) 502–8659.

Comment Date: 5 p.m. Eastern Time on June 20, 2007.

Kimberly D. Bose

Secretary.

[FR Doc. E7–11865 Filed 6–19–07; 8:45 am]

BILLING CODE 6717–01–P

DEPARTMENT OF ENERGY

Federal Energy Regulatory Commission

[Docket No. RP07–441–001]

Kinder Morgan Interstate Gas Transmission LLC; Notice of Compliance Filing

June 13, 2007.

Take notice that on June 11, 2007, Kinder Morgan Interstate Gas Transmission LLC (KMIGT) tendered for filing to become part of its FERC Gas Tariff, Fourth Revised Volume No. 1–B,

the following tariff sheets, to be effective June 3, 2007:

Substitute Second Revised Sheet No. 34
Substitute Second Revised Sheet No. 37A
Substitute Original Sheet No. 37B

KMIGT states that the purpose of this filing is to comply with the Commission's Letter Order issued on June 1, 2007, in Docket No. RP07–441–000.

Any person desiring to protest this filing must file in accordance with Rule 211 of the Commission's Rules of Practice and Procedure (18 CFR 385.211). Protests to this filing will be considered by the Commission in determining the appropriate action to be taken, but will not serve to make protestants parties to the proceeding. Such protests must be filed in accordance with the provisions of § 154.210 of the Commission's regulations (18 CFR 154.210). Anyone filing a protest must serve a copy of that document on all the parties to the proceeding.

The Commission encourages electronic submission of protests in lieu of paper using the ''eFiling'' link at *http://www.ferc.gov.* Persons unable to file electronically should submit an original and 14 copies of the protest to the Federal Energy Regulatory Commission, 888 First Street, NE., Washington, DC 20426.

This filing is accessible on-line at *http://www.ferc.gov*, using the ''eLibrary'' link and is available for review in the Commission's Public Reference Room in Washington, DC. There is an ''eSubscription'' link on the Web site that enables subscribers to receive e-mail notification when a document is added to a subscribed docket(s). For assistance with any FERC Online service, please e-mail *FERCOnlineSupport@ferc.gov*, or call (866) 208–3676 (toll free). For TTY, call (202) 502–8659.

Kimberly D. Bose,

Secretary.

[FR Doc. E7–11876 Filed 6–19–07; 8:45 am]

BILLING CODE 6717–01–P

DEPARTMENT OF ENERGY

Federal Energy Regulatory Commission

[Docket No. RP07–486–000]

Northern Border Pipeline Company; Notice of Tariff Filing

June 14, 2007.

Take notice that on June 12, 2007, Northern Border Pipeline Company (Northern Border) tendered for filing to be part of its FERC Gas Tariff, First Revised Volume No. 1; Eighteenth Revised Sheet No. 99A; Eighth Revised Sheet No. 287; Fourth Revised Sheet No. 294; and Fifth Revised Sheet No. 303A, to become effective July 12, 2007.

Northern Border states that the purpose of this filing is to revise its tariff to reflect minor housekeeping changes.

Any person desiring to intervene or to protest this filing must file in accordance with Rules 211 and 214 of the Commission's Rules of Practice and Procedure (18 CFR 385.211 and 385.214). Protests will be considered by the Commission in determining the appropriate action to be taken, but will not serve to make protestants parties to the proceeding. Any person wishing to become a party must file a notice of intervention or motion to intervene, as appropriate. Such notices, motions, or protests must be filed in accordance with the provisions of § 154.210 of the Commission's regulations (18 CFR 154.210). Anyone filing an intervention or protest must serve a copy of that document on the Applicant. Anyone filing an intervention or protest on or before the intervention or protest date need not serve motions to intervene or protests on persons other than the Applicant.

The Commission encourages electronic submission of protests and interventions in lieu of paper using the ''eFiling'' link at *http://www.ferc.gov.* Persons unable to file electronically should submit an original and 14 copies of the protest or intervention to the Federal Energy Regulatory Commission, 888 First Street, NE., Washington, DC 20426.

This filing is accessible on-line at *http://www.ferc.gov,* using the ''eLibrary'' link and is available for review in the Commission's Public Reference Room in Washington, DC. There is an ''eSubscription'' link on the Web site that enables subscribers to receive e-mail notification when a document is added to a subscribed docket(s). For assistance with any FERC Online service, please e-mail *FERCOnlineSupport@ferc.gov,* or call (866) 208–3676 (toll free). For TTY, call (202) 502–8659.

Kimberly D. Bose,

Secretary.

[FR Doc. E7–11949 Filed 6–19–07; 8:45 am]

BILLING CODE 6717–01–P

DEPARTMENT OF ENERGY

Federal Energy Regulatory Commission

[Docket No. RP07–484–000]

Northern Natural Gas Company; Notice of Petition for Limited Waiver

June 13, 2007.

Take notice that on June 8, 2007, Northern Natural Gas Company (Northern) tendered for filing a petition for a limited waiver of its FERC Gas Tariff in order to allow Greater Minnesota Gas Inc. (GMG) to extend firm transportation entitlement on a currently effective Firm Throughput Service Agreement despite inadvertently failing to meet the thirty day deadline to execute the Agreement after it was tendered by Northern.

Any person desiring to intervene or to protest this filing must file in accordance with Rules 211 and 214 of the Commission's Rules of Practice and Procedure (18 CFR 385.211 and 385.214). Protests will be considered by the Commission in determining the appropriate action to be taken, but will not serve to make protestants parties to the proceeding. Any person wishing to become a party must file a notice of intervention or motion to intervene, as appropriate. Such notices, motions, or protests must be filed on or before the date as indicated below. Anyone filing an intervention or protest must serve a copy of that document on the Applicant. Anyone filing an intervention or protest on or before the intervention or protest date need not serve motions to intervene or protests on persons other than the Applicant.

The Commission encourages electronic submission of protests and interventions in lieu of paper using the ''eFiling'' link at *http://www.ferc.gov.* Persons unable to file electronically should submit an original and 14 copies of the protest or intervention to the Federal Energy Regulatory Commission, 888 First Street, NE., Washington, DC 20426.

This filing is accessible on-line at *http://www.ferc.gov,* using the ''eLibrary'' link and is available for review in the Commission's Public Reference Room in Washington, DC. There is an ''eSubscription'' link on the Web site that enables subscribers to receive e-mail notification when a document is added to a subscribed docket(s). For assistance with any FERC Online service, please e-mail *FERCOnlineSupport@ferc.gov,* or call (866) 208–3676 (toll free). For TTY, call (202) 502–8659.

Comment Date: 5 p.m. Eastern Time June 19, 2007.

Kimberly D. Bose,

Secretary.

[FR Doc. E7–11866 Filed 6–19–07; 8:45 am]

BILLING CODE 6717–01–P

DEPARTMENT OF ENERGY

Federal Energy Regulatory Commission

[Docket No. RP07–483–000]

Northern Natural Gas Company; Notice of Proposed Changes in FERC Gas Tariff

June 13, 2007.

Take notice that on June 8, 2007, Northern Natural Gas Company (Northern) tendered for filing as part of its FERC Gas Tariff, Fifth Revised Volume No. 1, the following tariff sheets, to be effective July 9, 2007:

Second Revised Sheet No. 26
Ninth Revised Sheet No. 101
Third Revised Sheet No. 129
Sixth Revised Sheet No. 135A
Twelfth Revised Sheet No. 135D
Seventh Revised Sheet No. 136
Seventh Revised Sheet No. 138
Sixth Revised Sheet No. 141
Ninth Revised Sheet No. 142
Fourth Revised Sheet No. 142A
Second Revised Sheet No. 142B
Eighth Revised Sheet No. 143 18
Revised Sheet No. 144
Eighth Revised Sheet No. 145
Tenth Revised Sheet No. 146
Second Revised Sheet No. 146A
Sixth Revised Sheet No. 147
Second Revised Sheet No. 155
First Revised Sheet No. 205A
Third Revised Sheet No. 216
Ninth Revised Sheet No. 258
12 Revised Sheet No. 259
1 Revised 2 Revised Sheet No. 260A
Sixth Revised Sheet No. 261
Second Revised Sheet No. 262

Northern further states that copies of the filing have been mailed to each of its customers and interested State Commissions.

Any person desiring to intervene or to protest this filing must file in accordance with Rules 211 and 214 of the Commission's Rules of Practice and Procedure (18 CFR 385.211 and 385.214). Protests will be considered by the Commission in determining the appropriate action to be taken, but will not serve to make protestants parties to the proceeding. Any person wishing to become a party must file a notice of intervention or motion to intervene, as appropriate. Such notices, motions, or protests must be filed in accordance with the provisions of Section 154.210 of the Commission's regulations (18 CFR 154.210). Anyone filing an intervention or protest must serve a copy of that document on the Applicant. Anyone filing an intervention or protest on or before the intervention or protest date need not serve motions to intervene or protests on persons other than the Applicant.

The Commission encourages electronic submission of protests and interventions in lieu of paper using the ''eFiling'' link at *http://www.ferc.gov.* Persons unable to file electronically should submit an original and 14 copies of the protest or intervention to the Federal Energy Regulatory Commission, 888 First Street, NE., Washington, DC 20426.

This filing is accessible on-line at *http://www.ferc.gov,* using the ''eLibrary'' link and is available for review in the Commission's Public Reference Room in Washington, DC. There is an ''eSubscription'' link on the Web site that enables subscribers to receive e-mail notification when a document is added to a subscribed docket(s). For assistance with any FERC Online service, please e-mail *FERCOnlineSupport@ferc.gov*, or call (866) 208–3676 (toll free). For TTY, call (202) 502–8659.

Kimberly D. Bose,

Secretary.

[FR Doc. E7–11877 Filed 6–19–07; 8:45 am]

BILLING CODE 6717–01–P

DEPARTMENT OF ENERGY

Federal Energy Regulatory Commission

[Docket No. RP07–485–000]

Northwest Pipeline Corporation; Notice of Proposed Changes in FERC Gas Tariff and Filing of Non-Conforming Service Agreement

June 13, 2007.

Take notice that on June 8, 2007, Northwest Pipeline Corporation (Northwest) tendered for filing as part of its FERC Gas Tariff, Third Revised Volume No. 1, the following tariff sheets, to be effective July 9, 2007:

Fourth Revised Sheet No. 301
Fifth Revised Sheet No. 307
Third Revised Sheet No. 315
Sixth Revised Sheet No. 322
Fifth Revised Sheet No. 332
Fourth Revised Sheet No. 337
Fourth Revised Sheet No. 340
First Revised Sheet No. 349–A
Third Revised Sheet No. 350
Second Revised Sheet No. 359
Tenth Revised Sheet No. 363
Second Revised Sheet No. 395

Northwest also tendered for filing a non-conforming Rate Schedule TF–1 service agreement with Idaho Power Company.

Any person desiring to intervene or to protest this filing must file in accordance with Rules 211 and 214 of the Commission's Rules of Practice and Procedure (18 CFR 385.211 and 385.214). Protests will be considered by the Commission in determining the appropriate action to be taken, but will not serve to make protestants parties to the proceeding. Any person wishing to become a party must file a notice of intervention or motion to intervene, as appropriate. Such notices, motions, or protests must be filed in accordance with the provisions of Section 154.210 of the Commission's regulations (18 CFR 154.210). Anyone filing an intervention or protest must serve a copy of that document on the Applicant. Anyone filing an intervention or protest on or before the intervention or protest date need not serve motions to intervene or protests on persons other than the Applicant.

The Commission encourages electronic submission of protests and interventions in lieu of paper using the ''eFiling'' link at *http://www.ferc.gov.* Persons unable to file electronically should submit an original and 14 copies of the protest or intervention to the Federal Energy Regulatory Commission, 888 First Street, NE., Washington, DC 20426. This filing is accessible on-line at *http://www.ferc.gov,* using the ''eLibrary'' link and is available for review in the Commission's Public Reference Room in Washington, DC. There is an ''eSubscription'' link on the Web site that enables subscribers to receive e-mail notification when a document is added to a subscribed docket(s). For assistance with any FERC Online service, please e-mail *FERCOnlineSupport@ferc.gov,* or call (866) 208–3676 (toll free). For TTY, call (202) 502–8659.

Kimberly D. Bose,

Secretary.

[FR Doc. E7–11867 Filed 6–19–07; 8:45 am]

BILLING CODE 6717–01–P

DEPARTMENT OF ENERGY

Federal Energy Regulatory Commission

[Docket No. RP97–374–008]

Northwest Pipeline Corporation; Notice of Negotiated Rates

June 13, 2007.

Take notice that on June 8, 2007, Northwest Pipeline Corporation (Northwest) tendered for filing as part of its FERC Gas Tariff, Third Revised Volume No. 1, the following tariff sheets, to become effective July 9, 2007:

First Revised Sheet No. 400
First Revised Sheet No. 401

Northwest states that a copy of this filing has been served upon Northwest's customers and upon interested state regulatory commissions.

Any person desiring to intervene or to protest this filing must file in accordance with Rules 211 and 214 of the Commission's Rules of Practice and Procedure (18 CFR 385.211 and 385.214). Protests will be considered by the Commission in determining the appropriate action to be taken, but will not serve to make protestants parties to the proceeding. Any person wishing to become a party must file a notice of intervention or motion to intervene, as appropriate. Such notices, motions, or protests must be filed in accordance with the provisions of § 154.210 of the Commission's regulations (18 CFR 154.210). Anyone filing an intervention or protest must serve a copy of that document on the Applicant. Anyone filing an intervention or protest on or before the intervention or protest date need not serve motions to intervene or protests on persons other than the Applicant.

The Commission encourages electronic submission of protests and interventions in lieu of paper using the ''eFiling'' link at *http://www.ferc.gov.* Persons unable to file electronically should submit an original and 14 copies of the protest or intervention to the Federal Energy Regulatory Commission, 888 First Street, NE., Washington, DC 20426.

This filing is accessible on-line at *http://www.ferc.gov*, using the ''eLibrary'' link and is available for review in the Commission's Public Reference Room in Washington, DC. There is an ''eSubscription'' link on the Web site that enables subscribers to receive e-mail notification when a document is added to a subscribed docket(s). For assistance with any FERC Online service, please e-mail FERCOnlineSupport@ferc.gov, or call (866) 208–3676 (toll free). For TTY, call (202) 502–8659.

Kimberly D. Bose,

Secretary.

[FR Doc. E7–11869 Filed 6–19–07; 8:45 am]

BILLING CODE 6717–01–P

DEPARTMENT OF ENERGY

Federal Energy Regulatory Commission

[Docket No. CP06–90–002]

WTG Hugoton, LP; Notice of Compliance Filing

June 13, 2007.

Take notice that on June 1, 2007, WTG Hugoton (WTG) tendered for filing as part of its FERC Gas Tariff, Original Volume No. 1, Original Sheet Nos. 0 through 417.

WTG states that the filing is being made in compliance with the Commission's April 10, 2007 order in Docket Nos. CP06–89, et al., related to WTG's acquisition of certain public facilities from Northern Natural Gas Company, in order to implement open access service under the terms of the certificate of public convenience and necessity issued by the Commission.

Any person desiring to protest this filing must file in accordance with Rule 211 of the Commission's Rules of Practice and Procedure (18 CFR 385.211). Protests to this filing will be considered by the Commission in determining the appropriate action to be taken, but will not serve to make protestants parties to the proceeding. Such protests must be filed in accordance with the provisions of Section 154.210 of the Commission's regulations (18 CFR 154.210). Anyone filing a protest must serve a copy of that document on all the parties to the proceeding.

The Commission encourages electronic submission of protests in lieu of paper using the ''eFiling'' link at *http://www.ferc.gov.* Persons unable to file electronically should submit an original and 14 copies of the protest to the Federal Energy Regulatory Commission, 888 First Street, NE., Washington, DC 20426.

This filing is accessible on-line at *http://www.ferc.gov,* using the ''eLibrary'' link and is available for review in the Commission's Public Reference Room in Washington, DC. There is an ''eSubscription'' link on the Web site that enables subscribers to receive e-mail notification when a document is added to a subscribed docket(s). For assistance with any FERC Online service, please e-mail *FERCOnlineSupport@ferc.gov,* or call (866) 208–3676 (toll free). For TTY, call (202) 502–8659.

Kimberly D. Bose,

Secretary.

[FR Doc. E7–11875 Filed 6–19–07; 8:45 am]

BILLING CODE 6717–01–P

DEPARTMENT OF ENERGY

Federal Energy Regulatory Commission

[Docket No. EL07–68–000]

NSTAR Electric & Gas Corporation, Complainant, v. ISO New England, Inc., Respondent; Notice of Complaint

June 13, 2007.

Take notice that on June 11, 2007, NSTAR Electric & Gas Corporation (NSTAR) pursuant to sections 206 and 306 of the Federal Power Act and Rule 206 of the Rules of Practice and Procedure of the Commission's regulatons 18 CFR 385.206 (2006), tendered for filing this complaint against ISO New England, Inc. (ISO–NE) disputing the ISO–NE's administration of the Second Amended and Restated Reliability Must Run Agreement between Exelon New Boston, LLC and ISO–NE governing the operation of the New Boston facility.

Any person desiring to intervene or to protest this filing must file in accordance with Rules 211 and 214 of the Commission's Rules of Practice and Procedure (18 CFR 385.211, 385.214). Protests will be considered by the Commission in determining the appropriate action to be taken, but will not serve to make protestants parties to the proceeding. Any person wishing to become a party must file a notice of intervention or motion to intervene, as appropriate. The Respondent's answer and all interventions, or protests must be filed on or before the comment date. The Respondent's answer, motions to intervene, and protests must be served on the Complainants.

The Commission encourages electronic submission of protests and interventions in lieu of paper using the ''eFiling'' link at *http://www.ferc.gov.* Persons unable to file electronically should submit an original and 14 copies of the protest or intervention to the Federal Energy Regulatory Commission, 888 First Street, NE., Washington, DC 20426.

This filing is accessible on-line at *http://www.ferc.gov,* using the ''eLibrary'' link and is available for review in the Commission's Public

Reference Room in Washington, DC. There is an ''eSubscription'' link on the Web site that enables subscribers to receive e-mail notification when a document is added to a subscribed docket(s). For assistance with any FERC Online service, please e-mail *FERCOnlineSupport@ferc.gov,* or call (866) 208–3676 (toll free). For TTY, call (202) 502–8659.

Comment Date: 5 p.m. Eastern Time on July 11, 2007.

Kimberly D. Bose,

Secretary.

[FR Doc. E7–11871 Filed 6–19–07; 8:45 am]

BILLING CODE 6717–01–P

DEPARTMENT OF ENERGY

Federal Energy Regulatory Commission

Combined Notice of Filings #1

June 13, 2007.

Take notice that the Commission received the following electric rate filings

Docket Numbers: ER06–1545–003.

Applicants: Southern Company Services, Inc.

Description: Alabama Power Company *et al.* submit a response to FERC's Staff's Deficiency Letter.

Filed Date: 05/29/2007.

Accession Number: 20070613–0094.

Comment Date: 5 p.m. Eastern Time on Tuesday, June 19,2007.

Docket Numbers: ER07–544–001.

Applicants: PacifiCorp.

Description: PacifiCorp submits its compliance filing pursuant to the Commission 4/10/07 letter order.

Filed Date: 04/25/2007.

Accession Number: 20070425–5029.

Comment Date: 5 p.m. Eastern Time on Wednesday, June 20, 2007.

Docket Numbers: ER07–974–001.

Applicants: Wisconsin Electric Power Company.

Description: Wisconsin Electric Power Company submits an errata its Wholesale Distribution Service Agreement with the City of Norway, Michigan.

Filed Date: 06/12/2007.

Accession Number: 20070612–5048.

Comment Date: 5 p.m. Eastern Time on Tuesday, July 03, 2007.

Docket Numbers: ER07–1018–000.

Applicants: SIG Energy, LLLP.

Description: SIG Energy, LLLP submits a notice of succession informing that it has succeeded to the market-based rate tariff of Susquehanna Energy Products, LLC.

Filed Date: 06/08/2007.

Accession Number: 20070612–0192.

Comment Date: 5 p.m. Eastern Time on Friday, June 29, 2007.

Docket Numbers: ER07–1019–000 ER07–1020–000; ER07–1021–000.

Applicants: Niagara Mohawk Power Corporation.

Description: Niagara Mohawk Power Corp dba National Grid submits an unexecuted interconnection agreements based on the New York Independent System Operator Standard Large Generator Interconnection Agreement.

Filed Date: 06/08/2007.

Accession Number: 20070612–0193.

Comment Date: 5 p.m. Eastern Time on Friday, June 29, 2007.

Docket Numbers: ER07–1022–000.

Applicants: Duke Energy Carolinas, LLC.

Description: Duke Energy Carolinas, LLC submits an amendment to its FERC Electric, Fourth Revised Volume 3, to become 6/7/07.

Filed Date: 06/08/2007.

Accession Number: 20070612–0191.

Comment Date: 5 p.m. Eastern Time on Friday, June 29, 2007.

Docket Numbers: ER96–719–017; ER97–2801–017; ER99–2156–011.

Applicants: PacifiCorp; Cordova Energy Company LLC; MidAmerican Energy Company.

Description: Cordova Energy Company LLC *et al.* provides a notice of change in status under market-based rate authority pursuant to section 35.27(c) of the Commission's Regulations.

Filed Date: 06/08/2007.

Accession Number: 20070612–0218.

Comment Date: 5 p.m. Eastern Time on Friday, June 29, 2007.

Take notice that the Commission received the following public utility holding company filings:

Docket Numbers: PH07–19–000.

Applicants: Macquarie Infrastructure Company LLC.

Description: Macquarie Infrastructure Company LLC submits an Exemption Notification.

Filed Date: 06/12/2007.

Accession Number: 20070611–5090.

Comment Date: 5 p.m. Eastern Time on Tuesday, July 03, 2007.

Any person desiring to intervene or to protest in any of the above proceedings must file in accordance with Rules 211 and 214 of the Commission's Rules of Practice and Procedure (18 CFR 385.211 and 385.214) on or before 5 p.m. Eastern time on the specified comment date. It is not necessary to separately intervene again in a subdocket related to a compliance filing if you have previously intervened in the same docket. Protests will be considered by the Commission in determining the appropriate action to be taken, but will not serve to make protestants parties to the proceeding. Anyone filing a motion to intervene or protest must serve a copy of that document on the Applicant. In reference to filings initiating a new proceeding, interventions or protests submitted on or before the comment deadline need not be served on persons other than the Applicant.

The Commission encourages electronic submission of protests and interventions in lieu of paper, using the FERC Online links at *http://www.ferc.gov.* To facilitate electronic service, persons with Internet access who will eFile a document and/or be listed as a contact for an intervenor must create and validate an eRegistration account using the eRegistration link. Select the eFiling link to log on and submit the intervention or protests.

Persons unable to file electronically should submit an original and 14 copies of the intervention or protest to the Federal Energy Regulatory Commission, 888 First St., NE., Washington, DC 20426.

The filings in the above proceedings are accessible in the Commission's eLibrary system by clicking on the appropriate link in the above list. They are also available for review in the Commission's Public Reference Room in Washington, DC. There is an eSubscription link on the Web site that enables subscribers to receive e-mail notification when a document is added to a subscribed docket(s). For assistance with any FERC Online service, please e-mail *FERCOnlineSupport@ferc.gov* or call (866) 208–3676 (toll free). For TTY, call (202) 502–8659.

Kimberly D. Bose,

Secretary.

[FR Doc. E7–11878 Filed 6–19–07; 8:45 am]

BILLING CODE 6717–01–P

DEPARTMENT OF ENERGY

Federal Energy Regulatory Commission

Combined Notice of Filings #1

June 12, 2007.

Take notice that the Commission received the following electric rate filings:

Docket Numbers: ER01–3001–017.

Applicants: New York Independent System Operator, Inc.

Description: New York Independent System Operator, Inc. submits its Summer Compliance Report on Demand

Response Programs and New Generation Projects.

Filed Date: 6/1/2007.

Accession Number: 20070601–5059.

Comment Date: 5 p.m. Eastern Time on Friday, June 22, 2007.

Docket Numbers: ER06–1421–000.

Applicants: The Clearing Corporation.

Description: The Clearing Corporation submits a Notice of Withdrawal of its 8/29/06 Application for Market Based Rate Authority.

Filed Date: 6/5/2007.

Accession Number: 20070608–0005.

Comment Date: 5 p.m. Eastern Time on Tuesday, June 26, 2007.

Docket Numbers: ER07–423–002.

Applicants: South Carolina Electric & Gas Company.

Description: South Carolina Electric & Gas Company submits its compliance Electric Refund Report.

Filed Date: 6/8/2007.

Accession Number: 20070608–5020.

Comment Date: 5 p.m. Eastern Time on Friday, June 29, 2007.

Docket Numbers: ER07–613–003.

Applicants: California Independent System Operator Corporation, Inc.

Description: California Independent System Operator Corporation submits its Compliance Filing in accordance with FERC's May 8, 2007 Order.

Filed Date: 6/7/2007.

Accession Number: 20070611–0074.

Comment Date: 5 p.m. Eastern Time on Thursday, June 28, 2007.

Docket Numbers: ER07–642–001.

Applicants: Southern Company Services, Inc.

Description: Southern Company Services, Inc agent for Alabama Power Company et al submits responses to FERC's Staff's Deficiency Letter.

Filed Date: 5/29/2007.

Accession Number: 20070531–0092.

Comment Date: 5 p.m. Eastern Time on Friday, June 15, 2007.

Docket Numbers: ER07–734–001.

Applicants: Southwest Power Pool, Inc.

Description: Southwest Power Pool Inc submits an executed Meter Agent Services Agreement between Kansas Electric Power Cooperative Inc & the Empire District Electric Company.

Filed Date: 6/7/2007.

Accession Number: 20070611–0073.

Comment Date: 5 p.m. Eastern Time on Thursday, June 28, 2007.

Docket Numbers: ER07–736–001.

Applicants: Southwest Power Pool, Inc.

Description: Southwest Power Pool, Inc submits the executed Firm Point-to-Point Transmission Service Agreement with the City of Independence, Missouri.

Filed Date: 6/7/2007.

Accession Number: 20070611–0075.

Comment Date: 5 p.m. Eastern Time on Thursday, June 28, 2007.

Docket Numbers: ER07–749–001.

Applicants: Dyon, LLC.

Description: Dyon, LLC submits an amendment to its application for market-based rate authority and accompany electric power sales tariff originally submitted on 4/13/07 in compliance with Order 614 et al.

Filed Date: 6/5/2007.

Accession Number: 20070607–0202.

Comment Date: 5 p.m. Eastern Time on Tuesday, June 26, 2007.

Docket Numbers: ER07–752–001; ER07–753–001; ER07–754–001; ER07–755–001; ER07–756–001.

Applicants: Westar Energy, Inc.

Description: Westar Energy, Inc submits First Revised Sheets 2 of its Supplemental Generation Agreements in compliance with the Commission's 5/22/07 letter order.

Filed Date: 6/6/2007.

Accession Number: 20070608–0095.

Comment Date: 5 p.m. Eastern Time on Wednesday, June 27, 2007.

Docket Numbers: ER07–930–001.

Applicants: AER NY–Gen, LLC.

Description: AER NY–Gen LLC submits Exhibit A—Substitute Original Sheet 1 to FERC Electric Tariff, Second Revised Volume 1.

Filed Date: 6/6/2007.

Accession Number: 20070607–0203.

Comment Date: 5 p.m. Eastern Time on Wednesday, June 27, 2007.

Docket Numbers: ER07–988–000.

Applicants: ISO New England Inc.; Hydro-Quebec TransEnergie.

Description: ISO New England, Inc et al submits the Final English-French translated version of the Highgate Interconnection Operators Agreement relating to the Highgate Interconnection Facilities.

Filed Date: 5/31/2007.

Accession Number: 20070605–0183.

Comment Date: 5 p.m. Eastern Time on Thursday, June 21, 2007.

Docket Numbers: ER07–1015–000.

Applicants: Southwest Power Pool, Inc.

Description: Southwest Power Pool, Inc submits an executed service agreement for firm point-to-point transmission service with Southwest Public Service Co.

Filed Date: 6/7/2007.

Accession Number: 20070611–0078.

Comment Date: 5 p.m. Eastern Time on Thursday, June 28, 2007.

Docket Numbers: ER07–1016–000.

Applicants: Southern California Edison Company.

Description: Southern California Edison Co submits a Letter Agreement with Ocotillo Development LLC.

Filed Date: 6/7/2007.

Accession Number: 20070611–0077.

Comment Date: 5 p.m. Eastern Time on Thursday, June 28, 2007.

Docket Numbers: ER07–1017–000.

Applicants: Public Service Company of New Mexico.

Description: Public Service Co of New Mexico submits an Operation and Maintenance Agreement for Aztec Substation with Western Area Power Administration.

Filed Date: 6/8/2007.

Accession Number: 20070611–0076.

Comment Date: 5 p.m. Eastern Time on Friday, June 29, 2007.

Any person desiring to intervene or to protest in any of the above proceedings must file in accordance with Rules 211 and 214 of the Commission's Rules of Practice and Procedure (18 CFR 385.211 and 385.214) on or before 5 p.m. Eastern Time on the specified comment date. It is not necessary to separately intervene again in a subdocket related to a compliance filing if you have previously intervened in the same docket. Protests will be considered by the Commission in determining the appropriate action to be taken, but will not serve to make protestants parties to the proceeding. Anyone filing a motion to intervene or protest must serve a copy of that document on the Applicant. In reference to filings initiating a new proceeding, interventions or protests submitted on or before the comment deadline need not be served on persons other than the Applicant.

The Commission encourages electronic submission of protests and interventions in lieu of paper, using the FERC Online links at *http://www.ferc.gov.* To facilitate electronic service, persons with Internet access who will eFile a document and/or be listed as a contact for an intervenor must create and validate an eRegistration account using the eRegistration link. Select the eFiling link to log on and submit the intervention or protests.

Persons unable to file electronically should submit an original and 14 copies of the intervention or protest to the Federal Energy Regulatory Commission, 888 First St., NE., Washington, DC 20426.

The filings in the above proceedings are accessible in the Commission's eLibrary system by clicking on the appropriate link in the above list. They are also available for review in the Commission's Public Reference Room in Washington, DC. There is an

eSubscription link on the Web site that enables subscribers to receive e-mail notification when a document is added to a subscribed dockets(s). For assistance with any FERC Online service, please e-mail *FERCOnlineSupport@ferc.gov* or call (866) 208–3676 (toll free). For TTY, call (202) 502–8659.

Kimberly D. Bose,

Secretary.

[FR Doc. E7–11880 Filed 6–19–07; 8:45 am]

BILLING CODE 6717–01–P

DEPARTMENT OF ENERGY

Federal Energy Regulatory Commission

[Project No. 12802–000]

Natural Currents Energy Services, LLC; Notice of Application Accepted for Filing and Soliciting Motions To Intervene, Protests, and Comments

June 13, 2007.

Take notice that the following hydroelectric application has been filed with the Commission and is available for public inspection:

a. *Type of Application:* Preliminary Permit.

b. *Project No.:* 12802–000.

c. *Date filed:* May 21, 2007.

d. *Applicant:* Natural Currents Energy Services, LLC.

e. *Name of Project:* Nantucket Tidal Energy Plant.

f. *Location:* The project would be located in Nantucket Sound, between Nantucket Island and Martha's Vineyard, in Nantucket and Dukes Counties, Massachusetts.

g. *Filed Pursuant to:* Federal Power Act, 16 U.S.C. 791(a)–825(r).

h. *Applicant Contact:* Mr. Roger Bason, Natural Currents Energy Services, LLC, 24 Roxanne Boulevard, Highland, NY 12561, phone (845) 691–4008.

i. *FERC Contact:* Chris Yeakel, (202) 502–8132.

j. *Deadline for filing comments, protests, and motions to intervene:* 60 days from the issuance date of this notice.

The Commission's Rules of Practice and Procedure require all intervenors filing documents with the Commission to serve a copy of that document on each person in the official service list for the project. Further, if an intervenor files comments or documents with the Commission relating to the merits of an issue that may affect the responsibilities of a particular resource agency, they must also serve a copy of the document on that resource agency.

k. *Description of Project:* The proposed project would consist of: (1) One or several devices using the Tidal In-Stream Energy Conversion (TISEC), Lunar Energy, Gorlov Helical Turbine, Marine Current Turbine, or Natural Currents Red Hawk TISEC technology, (2) anchoring systems, (3) mooring lines, and (4) interconnection transmission lines. The project is estimated to have an annual generation of 3 gigawatt-hours per-year, which would be sold to a local utility.

l. *Locations of Applications:* A copy of the application is available for inspection and reproduction at the Commission in the Public Reference Room, located at 888 First Street, NE., Room 2A, Washington, DC 20426, or by calling (202) 502–8371. This filing may also be viewed on the Commission's Web site at *http://www.ferc.gov* using the ''eLibrary'' link. Enter the docket number excluding the last three digits in the docket number field to access the document. For assistance, call toll-free 1–866–208–3676 or e-mail *FERCOnlineSupport@ferc.gov.* For TTY, call (202) 502–8659. A copy is also available for inspection and reproduction at the address in item h above.

m. Individuals desiring to be included on the Commission's mailing list should so indicate by writing to the Secretary of the Commission.

n. *Competing Preliminary Permit:* Anyone desiring to file a competing application for preliminary permit for a proposed project must submit the competing application itself, or a notice of intent to file such an application, to the Commission on or before the specified comment date for the particular application (see 18 CFR 4.36). Submission of a timely notice of intent allows an interested person to file the competing preliminary permit application no later than 30 days after the specified comment date for the particular application. A competing preliminary permit application must conform with 18 CFR 4.30(b) and 4.36.

o. *Competing Development Application:* Any qualified development applicant desiring to file a competing development application must submit to the Commission, on or before a specified comment date for the particular application, either a competing development application or a notice of intent to file such an application. Submission of a timely notice of intent to file a development application allows an interested person to file the competing application no later than 120 days after the specified comment date for the particular application. A competing license application must conform with 18 CFR 4.30(b) and 4.36.

p. *Notice of Intent:* A notice of intent must specify the exact name, business address, and telephone number of the prospective applicant, and must include an unequivocal statement of intent to submit, if such an application may be filed, either a preliminary permit application or a development application (specify which type of application). A notice of intent must be served on the applicant(s) named in this public notice.

q. *Proposed Scope of Studies under Permit:* A preliminary permit, if issued, does not authorize construction. The term of the proposed preliminary permit would be 36 months. The work proposed under the preliminary permit would include economic analysis, preparation of preliminary engineering plans, and a study of environmental impacts. Based on the results of these studies, the Applicant would decide whether to proceed with the preparation of a development application to construct and operate the project.

r. *Comments, Protests, or Motions to Intervene:* Anyone may submit comments, a protest, or a motion to intervene in accordance with the requirements of Rules of Practice and Procedure, 18 CFR 385.210, 385.211, 385.214. In determining the appropriate action to take, the Commission will consider all protests or other comments filed, but only those who file a motion to intervene in accordance with the Commission's Rules may become a party to the proceeding. Any comments, protests, or motions to intervene must be received on or before the specified comment date for the particular application.

Comments, protests and interventions may be filed electronically via the Internet in lieu of paper; See 18 CFR 385.2001 (a)(1)(iii) and the instructions on the Commission's Web site under ''e-filing'' link. The Commission strongly encourages electronic filing.

s. *Filing and Service of Responsive Documents:* Any filings must bear in all capital letters the title ''COMMENTS'', ''RECOMMENDATIONS FOR TERMS AND CONDITIONS'', ''PROTEST'', ''COMPETING APPLICATION'' OR ''MOTION TO INTERVENE'', as applicable, and the Project Number of the particular application to which the filing refers. Any of the above-named documents must be filed by providing the original and the number of copies provided by the Commission's regulations to: The Secretary, Federal Energy Regulatory Commission, 888 First Street, NE., Washington, DC 20426. A copy of any motion to intervene must

also be served upon each representative of the Applicant specified in the particular application.

t. *Agency Comments:* Federal, state, and local agencies are invited to file comments on the described application. A copy of the application may be obtained by agencies directly from the Applicant. If an agency does not file comments within the time specified for filing comments, it will be presumed to have no comments. One copy of an agency's comments must also be sent to the Applicant's representatives.

Kimberly D. Bose,

Secretary.

[FR Doc. E7–11872 Filed 6–19–07; 8:45 am]

BILLING CODE 6717–01–P

DEPARTMENT OF ENERGY

Federal Energy Regulatory Commission

[Project No. 459–176]

Union Electric Company, dba AmerenUE; Notice of Application for Amendment of License and Soliciting Comments, Motions To Intervene, and Protests

June 13, 2007.

Take notice that the following application has been filed with the Commission and is available for public inspection:

a. *Application Type:* Non-Project Use of Project Lands and Waters.

b. *Project No.:* 459–176.

c. *Date Filed:* May 31, 2007.

d. *Applicant:* Union Electric Company, dba AmerenUE.

e. *Name of Project:* Osage Project.

f. *Location:* The project is located on the Osage River, in Benton, Camden, Miller, and Morgan Counties, Missouri. The project is located immediately downstream from the U.S. Army Corps of Engineers' (Corps) Harry S. Truman Dam and occupies 1.6 acres of inundated federal lands administered by the Bureau of Land Management.

g. *Filed Pursuant to:* Federal Power Act, 16 U.S.C. 791(a)–825(r) and 799 and 801.

h. *Applicant Contact:* Mr. Jeff Green, Supervisor, P.O. Box 993, Lake Ozark, MO 65049; phone number (573) 365–9214 or e-mail: *WGreen@ameren.com.*

i. *FERC Contact:* Any questions on this notice should be addressed to Steven Naugle at (202) 502–6061 or by e-mail: *steven.naugle@ferc.gov* or Heather Campbell (202) 502–6182 or by e-mail: *heather.campbell@ferc.gov.*

j. *Deadline for Filing Comments and or Motions:* June 29, 2007.

All documents (original and eight copies) should be filed with: The Secretary, Federal Energy Regulatory Commission, 888 First Street, NE., Washington DC 20426.

The Commission's Rules of Practice and Procedure require all intervenors filing documents with the Commission to serve a copy of that document on each person whose name appears on the official service list for the project. Further, if an intervenor files comments or documents with the Commission relating to the merits of an issue that may affect the responsibilities of a particular resource agency, they must also serve a copy of the document on that resource agency. A copy of any motion to intervene must also be served upon each representative of the Applicant specified in the particular application.

k. *Description of Application:* Union Electric Company, dba AmerenUE (AmerenUE), licensee for the Osage Project, has filed an application seeking authorization from the Federal Energy Regulatory Commission to permit construction of docks at the Atlantis Island condominiums to be located at the 3.5 mile marker of the Osage Arm of the Lake of the Ozark. The application is for 17 docks with 374 slips.

l. *Location of the Application:* This filing is available for review at the Commission or may be viewed on the Commission's Web site at *http://www.ferc.gov,* using the ''eLibrary'' link. Enter the docket number excluding the last three digits in the docket number field to access the document. You may also register online at *http://www.ferc.gov/docs-filing/esubscription.asp* to be notified via e-mail of new filings and issuances related to this or other pending projects. For assistance, contact FERC Online Support at *FERCOnlineSupport@ferc.gov* or toll-free at (866) 208–3676, or for TTY, contact (202) 502–8659. A copy is also available for inspection and reproduction at the address in item (h) above.

m. Individuals desiring to be included on the Commission's mailing list should so indicate by writing to the Secretary of the Commission.

n. *Comments, Protests, or Motions to Intervene:* Anyone may submit comments, a protest, or a motion to intervene in accordance with the requirements of Rules of Practice and Procedure, 18 CFR 385.210, 385.211, 385.214. In determining the appropriate action to take, the Commission will consider all protests or other comments filed, but only those who file a motion to intervene in accordance with the Commission's Rules may become a party to the proceeding. Any comments, protests, or motions to intervene must be received on or before the specified comment date for the particular application.

o. Any filings must bear in all capital letters the title ''COMMENTS'', ''PROTEST'', OR ''MOTION TO INTERVENE'', as applicable, and the Project Number of the particular application to which the filing refers.

p. *Agency Comments:* Federal, state, and local agencies are invited to file comments on the application. A copy of the application may be obtained by agencies directly from the Applicant. If an agency does not file comments within the time specified for filing comments, it will be presumed to have no comments. One copy of an agency's comments must also be sent to the Applicant's representatives.

q. Comments, protests and interventions may be filed electronically via the Internet in lieu of paper. See, 18 CFR 385.2001(a)(1)(iii) and the instructions on the Commission's Web site at *http://www.ferc.gov* under the ''e-Filing'' link.

Kimberly D. Bose,

Secretary.

[FR Doc. E7–11873 Filed 6–19–07; 8:45 am]

BILLING CODE 6717–01–P

DEPARTMENT OF ENERGY

Federal Energy Regulatory Commission

Sunshine Act Meeting Notice

June 14, 2007.

The following notice of meeting is published pursuant to section 3(a) of the government in the Sunshine Act (Pub. L. No. 94–409), 5 U.S.C 552b:

AGENCY HOLDING MEETING: Federal Energy Regulatory Commission.

DATE AND TIME: June 21, 2007, 10 a.m.

PLACE: Room 2C, 888 First Street, NE., Washington, DC 20426.

STATUS: Open.

MATTERS TO BE CONSIDERED: Agenda.

* **Note**—Items listed on the agenda may be deleted without further notice.

FOR FURTHER INFORMATION CONTACT: Kimberly D. Bose, Secretary, Telephone (202) 502–8400. For a recorded message listing items struck from or added to the meeting, call (202) 502–8627.

This is a list of matters to be considered by the Commission. It does not include a listing of all documents relevant to the items on the agenda. All

public documents, however, may be viewed on line at the Commission's Web site at *http://www.ferc.gov* using the eLibrary link, or may be examined in the Commission's Public Reference Room.

920th Meeting

Regular Meeting

June 21, 2007, 10 a.m.

Item No.	Docket No.	Company
	Administrative	
A–1	AD02–1–000	Agency Administrative Matters.
A–2	AD02–7–000	Customer Matters, Reliability, Security and Market Operations.
A–3	AD06–3–000	Energy Market Update.
	Electric	
E–1	RM04–7–000	Market Based Rates for Wholesale Sales of Electric Energy, Capacity and Ancillary Services by Public Utilities.
E–2	RM06–10–001	New PURPA Section 210(m) Regulations Applicable to Small Power Production and Cogeneration Facilities.
E–3	AD07–7–000, RM07–19–000	Wholesale Competition in Regions with Organized Electric Markets.
E–4	ER06–615–003, ER06–615–005	California Independent System Operator Corporation.
E–5	ER97–4166–018, ER96–780–007, EL04–124–001, EL05–104–000, ER97–4166–021, ER96–780–010, EL04–124–003, EL05–104–001.	Southern Companies Energy Marketing, Inc. and Southern Companies Services, Inc.
E–6	ER97–4166–022, ER96–780–012, EL04–124–004.	Southern Companies Energy Marketing, L.P. and Southern Companies Services, Inc.
E–7	ER07–550–000, ER07–550–001	Midwest Independent Transmission System Operator, Inc.
E–8	ER05–1410–002, EL05–148–002, ER05–1410–003, EL05–148–003.	PJM Interconnection, L.L.C.
E–9	EL07–48–000	Entergy Services, Inc.
E–10	OMITTED.	
E–11	EL07–42–000	Constellation Energy Commodities Group, Inc.
E–12	EL07–46–000	Morgan Stanley Capital Group, Inc. and Barclays Bank, Plc.
E–13	EL00–95–000	*San Diego Gas & Electric Company* v. *Sellers of Energy and Ancillary Services*.
	EL00–98–000	Investigation of Practices of the California Independent System Operator and the California Power Exchange.
	EL01–10–000	*Puget Sound Energy, Inc.* v. *Sellers of Energy and/or Capacity*.
	IN03–10–000	Investigation of Anomalous Bidding Behavior and Practices in Western Markets.
	PA02–2–000	Fact-Finding Investigation into Possible Manipulation of Electric and Natural Gas Prices PacifiCorp.
	EL03–163–000, EL03–197–000	PPM Energy, Inc. (f/k/a PacifiCorp Power Marketing, Inc.).
	ER03–746–000	California Independent System Operator Corporation.
E–14	EL00–95–194	*San Diego Gas & Electric Company* v. *Sellers of Energy and Ancillary Services*.
	EL00–98–178	Investigation of Practices of the California Independent System Operator and the California Power Exchange.
	IN03–10–026	Investigation of Anomalous Bidding Behavior and Practices in Western Markets.
	PA02–2–040	Fact-Finding Investigation into Potential Market Manipulation of Electric and Natural Gas Prices.
	EL03–179–006, IN01–3–004	Williams Energy Services Corporation. AES Southland, Inc. Williams Energy Marketing & Trading Inc.
E–15	EL00–95–191	*San Diego Gas & Electric Company* v. *Sellers of Energy and Ancillary Services.*
	EL00–98–176	Investigation of Practices of the California Independent System Operator and the California Power Exchange
	EL01–10–021	*Puget Sound Energy, Inc.* v. *Sellers of Energy and/or Capacity.*
	IN03–10–024	Investigation of Anomalous Bidding Behavior and Practices in Western Markets.
	PA02–2–038	Fact-Finding Investigation into Possible Manipulation of Electric and Natural Gas Prices.
	EL03–187–006	El Paso Merchant Energy, L.P.
E–16	EL05–15–008	*Arkansas Electric Cooperative Corporation* v. *Entergy Arkansas, Inc.*
E–17	ER07–772–000, ER07–813–000, ER05–1230–001.	Midwest Independent Transmission System Operator, Inc.
E–18	ER07–805–000	California Independent System Operator Corporation.
E–19	ER07–87–000, ER07–87–001	ISO New England Inc.
E–20	EL07–69–000	Western Systems Power Pool Agreement.
	ER91–195–000	Western Systems Power Pool.
E–21	EL05–25–001, EL05–25–002, EL05–25–003.	*Tenaska Alabama II Partners, L.P.* v. *Alabama Power Company and Southern Company Services, Inc.*
	EL05–26–001, EL05–26–002, EL05–26–003.	*Tenaska Alabama Partners, L.P.* v. *Alabama Power Company and Southern Company Services, Inc.*
	EL05–27–001, EL05–27–002, EL05–27–003.	*Tenaska Georgia Partners, L.P.* v. *Georgia Power Company and Southern Company Services, Inc.*
E–22	ER06–448–001	Southwest Power Pool.

Item No.	Docket No.	Company
E–23	QM07–4–000	American Electric Power Services Corporation. Appalachian Power Company. Columbus Southern Power Company. Indiana Michigan Power Company. Kentucky Power Company. Kingsport Power Company. Ohio Power Company. Wheeling Power Company.
E–24	OMITTED.	
E–25	RM07–18–000	Elimination of FERC Form 423.
	Miscellaneous	
M–1	RM96–1–027	Standards for Business Practices for Interstate Natural Gas Pipelines.
	RM05–5–001	Standards for Business Practices for Public Utilities.
	Gas	
G–1	RP06–407–000	Gas Transmission Northwest Corporation.
G–2	PR07–10–000	Kinder Morgan Texas Pipeline, L.P.
	Hydro	
H–1	P–9401–065	Mount Hope Waterpower Project, LLP.
H–2	P–2785–063, P–10808–036, P–10809–030, P–10810–034.	Synex Michigan, LLC.
	Certificates	
C–1	RM06–7–001	Revisions to the Blanket Certificate Regulations and Clarification Regarding Rates.
C–2	RM07–17–000	Revisions to Landowner Notification and Blanket Certificate Regulations.
C–3	CP06–19–001	Windy Hill Gas Storage, LLC.
C–4	CP05–18–000	Equitrans, L.P.
C–5	CP06–448–000, CP06–448–001	Natural Gas Pipeline Company of America.
	CP06–449–000, CP06–449–001, CP06–450–000, CP06–450–001, CP06–451–000, CP06–451–001.	Kinder Morgan Louisiana Pipeline LLC.

A free webcast of this event is available through *http://www.ferc.gov.* Anyone with Internet access who desires to view this event can do so by navigating to www.ferc.gov's Calendar of Events and locating this event in the Calendar. The event will contain a link to its webcast. The Capitol Connection provides technical support for the free webcasts. It also offers access to this event via television in the DC area and via phone bridge for a fee. If you have any questions, visit *http://www.CapitolConnection.org* or contact Danelle Perkowski or David Reininger at 703–993–3100.

Immediately following the conclusion of the Commission Meeting, a press briefing will be held in the Commission Meeting Room. Members of the public may view this briefing in the designated overflow room. This statement is intended to notify the public that the press briefings that follow Commission meetings may now be viewed remotely at Commission headquarters, but will not be telecast through the Capitol Connection service.

Kimberly D. Bose,

Secretary.

[FR Doc. E7–11954 Filed 6–19–07; 8:45 am]

BILLING CODE 6717–01–P

ENVIRONMENTAL PROTECTION AGENCY

[FRL–8329–3]

Workshop To Discuss Policy-Relevant Science To Inform EPA's Integrated Plan for the Review of the Primary Particulate Matter (PM) National Ambient Air Quality Standards (NAAQS)

AGENCY: Environmental Protection Agency (EPA).

ACTION: Notice of workshop.

SUMMARY: The EPA is announcing that a workshop entitled ''Workshop to Discuss Policy-Relevant Science to Inform EPA's Integrated Plan for the Review of the Primary Particulate Matter National Ambient Air Quality Standards'' is being organized by EPA's National Center for Environmental Assessment (NCEA), Office of Research and Development and EPA's Office of Air Quality Planning and Standards (OAQPS), Office of Air and Radiation. The workshop will be held on July 11 through 13, 2007 in Research Triangle Park, North Carolina. The workshop will be open to attendance by interested public observers on a first-come, first-served basis up to the limits of available space.

DATES: The workshop will be held on July 11, 12, and 13, 2007.

ADDRESSES: The workshops will be held at U.S. EPA, 109 T.W. Alexander Drive, Research Triangle Park, North Carolina. An EPA contractor, SAIC, is providing logistical support for the workshop. For further information on the workshops, contact Ms. Kristen Wheeler, SAIC Conference Coordinator, 11251 Roger Bacon Drive, Reston, VA 20190, telephone: 703–318–4535; facsimile: 703–318–4755; e-mail: *wheelerkr@saic.com.*

FOR FURTHER INFORMATION CONTACT: Questions regarding information, registration, and logistics for the workshop should be directed to the SAIC conference coordinator listed in **ADDRESSES** above.

Additional questions regarding the workshop should be directed to Ms. Beth Hassett-Sipple, U.S. EPA, OAQPS, telephone: 919–541–4605; facsimile: 919–541–0237; e-mail: *hassett-sipple.beth@epa.gov* or Dr. Lori White, U.S. EPA, NCEA, telephone: 919–541–3146; facsimile: 919–541–1818; e-mail: *white.lori@epa.gov.*

SUPPLEMENTARY INFORMATION:

I. Information About the Workshop

The Agency's last review of the particulate matter (PM) national ambient air quality standards (NAAQS) was completed in September 2006 with the promulgation of revisions to some aspects of the PM standards to provide requisite protection of public health and welfare (71 FR 61144). Initiating the next review of these standards at this time is consistent with the Clean Air Act's requirement that the Agency periodically review the latest scientific information and the standards. It is also consistent with the Agency's new NAAQS review process.[1] This workshop will provide an opportunity for external experts as well as EPA staff to highlight significant new and emerging PM research, and to make individual recommendations to the Agency regarding the design and scope of the review for the primary (health-based) PM standards [2] to ensure that it addresses key policy-relevant issues and considers the new science relevant to informing our understanding of these issues.

We intend that workshop discussions will build upon three prior publications or events: [3]

1. *Provisional Assessment of Recent Studies on Health Effects of Particulate Matter Exposure.* This assessment, which was completed by EPA's NCEA in July 2006, evaluated studies published too late for inclusion in the final PM criteria document in the last review.

2. *National Ambient Air Quality Standards for Particulate Matter: Final Rule* (71 FR 61144, October 17, 2006). The preamble to the final rule included detailed discussions of policy-relevant issues central to the last review.

3. Materials from the December 2006 workshop entitled, ''Interpretation of Epidemiologic Studies of Multi-pollutant Exposure and Health Effects.'' The workshop dealt with important issues relevant to this review, such as the interpretation and understanding of criteria air pollutant health effects analyses in population-level epidemiologic studies, with a focus on multi-pollutant exposures (71 FR 67566, November 22, 2006).

Workshop participants are encouraged to review each of these documents and/or supporting materials thoroughly before the meeting begins, as they provide important insights into new scientific advances and key policy-relevant questions.

Based in large part on the input received during this workshop, EPA intends to develop a draft integrated PM NAAQS review plan that will outline the schedule, process, and approaches for evaluating the relevant scientific information and addressing the key policy-relevant issues to be considered in this review. The Clean Air Scientific Advisory Committee (CASAC) will be asked to conduct a consultation with the Agency on the draft integrated plan later this year, and the public will have the opportunity to comment on it as well. The final integrated plan will be used to frame each of the major elements of the PM review under the new NAAQS process: an integrated science assessment document, a risk/exposure assessment report, and a policy assessment to be published as an advance notice of proposed rulemaking (ANPR).

Dated: June 14, 2007.

P.W. Preuss,

Director, National Center for Environmental Assessment.

[FR Doc. E7–11957 Filed 6–19–07; 8:45 am]

BILLING CODE 6560–50–P

[1] For more information on the NAAQS review process, please see *http://www.epa.gov/ttn/naaqs/*.

[2] A similar workshop to discuss planning for the review of the secondary (welfare-based) PM NAAQS will be held on July 16, 2007 in Research Triangle Park. Please see announcement elsewhere in today's **Federal Register**.

[3] Please see *http://www.epa.gov/air/particlepollution/actions.html* to obtain a copy of the provisional science assessment, the notice of final rulemaking, and other related documents.

ENVIRONMENTAL PROTECTION AGENCY

[FRL–8329–1]

Oxides of Nitrogen and Sulfur (NO_X/SO_X) Secondary National Ambient Air Quality Standards (NAAQS) Workshop

AGENCY: Environmental Protection Agency (EPA).

ACTION: Notice of workshop.

SUMMARY: The EPA is announcing that a workshop entitled ''Oxides of Nitrogen and Sulfur (NO_X/SO_X) Secondary National Ambient Air Quality Standards (NAAQS) Workshop'' is being organized by EPA's National Center for Environmental Assessment (NCEA), Office of Research and Development and EPA's Office of Air Quality Planning and Standards (OAQPS), Office of Air and Radiation. The workshop will be held on July 17, 18 and 19, 2007 in Research Triangle Park, North Carolina. The workshop will be open to attendance by interested public observers on a first-come, first-served basis up to the limits of available space.

DATES: The workshop entitled ''Oxides of Nitrogen and Sulfur (NO_X/SO_X) Secondary National Ambient Air Quality Standards (NAAQS) Workshop'' will be held on July 17, 18, and 19, 2007.

ADDRESSES: The workshop will be held at the Carolina Inn in Chapel Hill, North Carolina. An EPA contractor, SAIC, is providing logistical support for the workshop. For further information on the workshop, contact Ms. Kristen Wheeler, SAIC Conference Coordinator, 11251 Roger Bacon Drive, Reston, VA 20190, telephone: 703–318–4535; facsimile: 703–318–4755; e-mail: *wheelerkr@saic.com.*

FOR FURTHER INFORMATION CONTACT: Questions regarding information, registration, and logistics for the workshops should be directed to the SAIC Conference Coordinator listed in **ADDRESSES** above.

Additional questions regarding the secondary NO_X/SO_X NAAQS workshop should be directed to Dr. Tara Greaver, U.S. EPA, NCEA, telephone: 919–541–2435; facsimile: 919–541–1818; e-mail: *greaver.tara@epa.gov.*

SUPPLEMENTARY INFORMATION:

I. Summary of Information About the Workshops

The U.S. Clean Air Act requires that EPA carry out periodic reviews of the national ambient air quality standards (NAAQS) for major ''criteria'' air pollutants and to revise the NAAQS for a given pollutant, as appropriate. The Agency is in the process of reviewing the secondary (welfare-based) NAAQS for Oxides of Nitrogen (NO_X) and Sulfur Oxides (SO_X). EPA has recognized the merit of integrating the science assessment for these two pollutants, particularly for ecological and welfare effects, based on the important interrelationships for NO_X and SO_X in both their atmospheric chemistry and their effects on the environment. Therefore, EPA is conducting a joint

assessment of the secondary NAAQS for NO_X and SO_X.

As part of the NAAQS reviews, the National Center for Environmental Assessment (NCEA) within EPA's Office of Research and Development (ORD) will assess newly available scientific information in Integrated Science Assessment (ISA) documents (formerly known as Air Quality Criteria Documents) that will be supported by more detailed and comprehensive annexes. The assessments in these documents are intended to provide the scientific bases for the reviews of the NAAQS. EPA's Office of Air Quality Planning and Standards (OAQPS) will prepare risk and exposure assessment analyses, as appropriate, drawing upon the scientific evidence summarized in the ISA. Subsequently, the EPA expects to prepare a policy assessment, to be published as an advance notice of proposed rulemaking, that will discuss, in part, the findings of the science and risk/exposure assessments related to the adequacy of the standards and describe a range of options for revising or retaining the NAAQS.

EPA is holding this workshop to inform the Agency's assessment of the scientific evidence for the review of the secondary NAAQS for NO_X and SO_X. The workshop will address various issues involved in the preparation of the draft material for the ISA and annexes. This workshop is planned to help ensure that the ISA provides an up-to-date, state-of-the-art scientific basis for the review of the NAAQS. Workshop discussions will be focused on identifying and integrating scientific evidence that is relevant for future risk and exposure analyses to include in the ISA.

This workshop is being held in conjunction with a workshop entitled ''Workshop to Discuss Policy-Relevant Science to Inform EPA's Integrated Plan for the Review of the Secondary Particulate Matter (PM) National Ambient Air Quality Standards (NAAQS)'' (see accompanying Notice of Workshop).

Dated: June 14, 2007.

Peter W. Preuss,

Director, National Center for Environmental Assessment.

[FR Doc. E7–11960 Filed 6–19–07; 8:45 am]

BILLING CODE 6560–50–P

ENVIRONMENTAL PROTECTION AGENCY

[FRL–8329–2]

Workshop To Discuss Policy-Relevant Science To Inform EPA's Integrated Plan for the Review of the Secondary Particulate Matter (PM) National Ambient Air Quality Standards (NAAQS)

AGENCY: Environmental Protection Agency (EPA).

ACTION: Notice of workshop.

SUMMARY: The EPA is announcing that a workshop entitled ''Workshop to Discuss Policy-Relevant Science to Inform EPA's Integrated Plan for the Review of the Secondary Particulate Matter (PM) National Ambient Air Quality Standards (NAAQS)'' is being organized by EPA's National Center for Environmental Assessment (NCEA), Office of Research and Development and EPA's Office of Air Quality Planning and Standards (OAQPS), Office of Air and Radiation. The workshop will be held on July 16, 2007 in Chapel Hill, North Carolina and will be open to attendance by interested public observers on a first-come, first-served basis up to the limits of available space.

DATES: The workshop entitled ''Workshop to Discuss Policy-Relevant Science to Inform EPA's Integrated Plan for the Review of the Secondary Particulate Matter (PM) National Ambient Air Quality Standards (NAAQS)'' will be held on July 16, 2007.

ADDRESSES: The workshop will be held at the Carolina Inn in Chapel Hill, North Carolina. An EPA contractor, SAIC, is providing logistical support for the workshop. For further information on the workshop, contact Ms. Kristen Wheeler, SAIC Conference Coordinator, 11251 Roger Bacon Drive, Reston, VA 20190, telephone: 703–318–4535; facsimile: 703–318–4755; e-mail: *wheelerkr@saic.com.*

FOR FURTHER INFORMATION CONTACT: Questions regarding information, registration, and logistics for the workshops should be directed to the SAIC Conference Coordinator listed in **ADDRESSES** above.

Additional questions regarding the secondary PM NAAQS workshop should be directed to Dr. Paul Wagner, U.S. EPA, NCEA, telephone: 919–541–2255; facsimile: 919–541–0237; e-mail: *wagner.paulf@epa.gov.*

SUPPLEMENTARY INFORMATION:

I. Summary of Information About the Workshops

The U.S. Clean Air Act requires that EPA carry out periodic reviews of the national ambient air quality standards (NAAQS) for major ''criteria'' air pollutants and to revise the NAAAQS for a given pollutant, as appropriate. The Agency's last review of the PM NAAQS was completed in September 2006 with the promulgation of revisions to some aspects of the PM standards to provide requisite protection of public health and welfare (71 FR 61144, October 17, 2006). Initiating the next review of these standards at this time is consistent with the Clean Air Act's requirement that the Agency periodically review the latest scientific information and the standards. It is also consistent with the Agency's new NAAQS review process. For more information on the NAAQS review process, please see *http://www.epa.gov/ttn/naaqs/.*

The workshop will provide an opportunity for external experts as well as EPA staff to highlight significant new and emerging research, and to make individual recommendations to the Agency regarding the design and scope of the review for the secondary (welfare-based) PM standards to ensure it addresses key policy-relevant issues and considers the new science relevant to informing our understanding of these issues. A similar workshop to discuss planning for the review of the primary (health-based) PM NAAQS will be held on July 11, 12, and 13, 2007 in Research Triangle Park, North Carolina. Please see the announcement elsewhere in today's **Federal Register**.

Based in large part on the input received during the primary and secondary PM workshops, EPA intends to develop a draft integrated PM NAAQS review plan that will outline the schedule, process, and approaches for evaluating the relevant scientific information and addressing the key policy-relevant issues to be considered in this review. The Clean Air Scientific Advisory Committee (CASAC) will be asked to conduct a consultation with the Agency on the draft integrated plan later this year, and the public will have the opportunity to comment on the draft integrated plan as well. The final integrated plan will be used to frame each of the major elements of the PM review under the new NAAQS process: An integrated science assessment document, a risk/exposure assessment report, and a policy assessment to be published as an advance notice of proposed rulemaking (ANPR).

Immediately following this workshop, EPA is sponsoring a workshop entitled ''Oxides of Nitrogen and Sulfur (NO_X/SO_X) Secondary National Ambient Air Quality Standards (NAAQS) Workshop.'' These workshops are being held in close coordination because EPA has recognized that some overlap is likely in the issues discussed and areas of expertise involved in the review of secondary standards for PM, Oxides of Nitrogen (NO_X), and Sulfur Oxides (SO_X).

Dated: June 14, 2007.

P.W. Preuss,

Director, National Center for Environmental Assessment.

[FR Doc. E7–11959 Filed 6–19–07; 8:45 am]

BILLING CODE 6560–50–P

ENVIRONMENTAL PROTECTION AGENCY

[EPA–HQ–OPP–2006–0847; FRL–8123–4]

Colorado State Plan for Certification of Applicators of Restricted Use Pesticides; Notice of Approval

AGENCY: Environmental Protection Agency (EPA).

ACTION: Notice.

SUMMARY: In the **Federal Register** of December 22, 2006, EPA issued a notice announcing its intent to approve an amended Colorado State Plan for the certification of applicators of restricted use pesticides contingent upon Colorado's promulgation of appropriate revised State Rules and Regulations pertaining to the Administration and Enforcement of the Colorado Pesticide Applicators' Act by January 1, 2007. In that notice, EPA solicited comments from the public on the proposed action to approve the amended Colorado State Plan. The amended Certification Plan Colorado submitted to EPA contained several statutory, regulatory, and programmatic changes to its current Certification Plan. The proposed amendments provide details for the certification of both private and commercial pesticide applicators and subsequent enforcement of pesticide laws and regulations pursuant to the Colorado Pesticide Applicator's Act. In addition, the amended State Plan adds three new commercial pesticide applicator subcategories. No comments were received in response to that **Federal Register** notice and Colorado promulgated the appropriate revised State Rules and Regulations pertaining to the Administration and Enforcement of the Colorado Pesticide Applicators' Act on January 1, 2007. Therefore, EPA hereby approves the amended Colorado State Plan.

FOR FURTHER INFORMATION CONTACT: Peg Perreault, EPA Region 8, Pollution Prevention, Pesticides, and Toxics Program, 8P–P3T, 1595 Wynkoop St., Denver, CO 80202–1129; telephone number: (303) 312–6286; e-mail address: *perreault.peg@epa.gov*.

SUPPLEMENTARY INFORMATION:

I. General Information

A. Does this Action Apply to Me?

This action is directed to the public in general. This action may, however, be of interest to those involved in agriculture and anyone involved with the distribution and application of pesticides for agricultural purposes. Others involved with pesticides in a non-agricultural setting may also be affected. In addition, it may be of interest to others, such as, those persons who are or may be required to conduct testing of chemical substances under the Federal Food, Drug, and Cosmetic Act (FFDCA), or the Federal Insecticide, Fungicide, and Rodenticide Act (FIFRA). Since other entities may also be interested, the Agency has not attempted to describe all the specific entities that may be affected by this action. If you have any questions regarding the applicability of this action to a particular entity, consult the person listed under **FOR FURTHER INFORMATION CONTACT**.

B. How Can I Get Copies of this Document and Other Related Information?

1. *Docket.* EPA has established a docket for this action under docket identification (ID) number EPA–HQ–OPPT–2006–0847. Publicly available docket materials are available either in the electronic docket at *http://www.regulations.gov*, or, if only available in hard copy, at the Office of Pesticide Programs (OPP) Regulatory Public Docket in Rm. S–4400, One Potomac Yard (South Building), 2777 S. Crystal Drive, Arlington, VA. The hours of operation of this Docket facility are from 8:30 a.m. to 4 p.m., Monday through Friday, excluding legal holidays. The Docket facility telephone number is (703) 305–5805.

2. *Electronic access.* You may access this **Federal Register** document electronically through the EPA Internet under the ''**Federal Register**'' listings at *http://www.epa.gov/fedrgstr*.

II. What Action is the Agency Taking?

EPA is approving the amended Colorado State Certification Plan. This approval is based upon EPA's review of the Colorado State Plan and finding it in compliance with FIFRA and its implementing regulations at 40 CFR part 171. Further, there were no public comments submitted in response to the earlier **Federal Register** notice (71 FR 77014) (FRL–8102–8) soliciting comments and Colorado promulgated the appropriate revised State Rules and Regulations pertaining to the Administration and Enforcement of Colorado Pesticide Applicators' Act. Therefore, the amended Colorado State Certification Plan is hereby approved.

List of Subjects

Environmental protection, Education, Pests and pesticides.

Dated: May 30, 2007.

Robert E. Roberts,

Regional Administrator, Region 8.

[FR Doc. E7–11945 Filed 6–19–07; 8:45 am]

BILLING CODE 6560–50–S

ENVIRONMENTAL PROTECTION AGENCY

[EPA–HQ–OPP–2007–0501; FRL–8136–5]

Chloropicrin,Dazomet, 1,3-Dichloropropene, Metam potassium, Metam sodium, and Methyl bromide; Extension of Comment Periods

AGENCY: Environmental Protection Agency (EPA).

ACTION: Extension of comment periods.

SUMMARY: EPA issued five notices in the **Federal Register** of May 2, 2007, announcing the availability and seeking comments on EPA's revised human health risk assessments for the fumigants chloropicrin, dazomet, 1,3-dichloropropene, metam potassium, metam sodium, and methyl bromide. This notice announces EPA's decision to extend the comment period from July 2, 2007 to September 3, 2007, for the five actions.

DATES: Comments, identified by the applicable docket identification number (see the May 2, 2007 notices) must now be received on or before September 3, 2007.

ADDRESSES: Follow the detailed instructions as provided under **ADDRESSES** in the **Federal Register** documents of May 2, 2007.

FOR FURTHER INFORMATION CONTACT: The applicable contact persons listed in the **Federal Register** documents of May 2, 2007.

SUPPLEMENTARY INFORMATION:

I. General Information

A. Does this Action Apply to Me?

The Agency included in the notices of May 2, 2007, a list of those who may be potentially affected by this action. If you have questions regarding the applicability of this action to a particular entity, consult the person listed under **FOR FURTHER INFORMATION CONTACT** in the **Federal Register** documents of May 2, 2007.

B. How Can I Access Electronic Copies of this Document?

In addition to accessing an electronic copy of this **Federal Register** document through the electronic docket at*http://www.regulations.gov*, you may access this **Federal Register** document electronically through the EPA Internet under the ''**Federal Register**'' listings at *http://www.epa.gov/fedrgstr*.

II. What Action is EPA taking?

This document extends the public comment periods for the fumigants chloropicrin, dazomet, 1,3-dichloropropene, metam potassium, metam sodium, and methyl bromide established in the **Federal Register** issued on May 2, 2007 (72 FR 24290, FRL–8127–7), (72 FR 24292, FRL–8126–7), (72 FR 24294, FRL–8124–8), (72 FR 24295, FRL–8125–9), and (72 FR 24297, FRL–8125–7). In those documents, EPA announced the availability of the risk assessments and opened 60–day public comment periods. EPA is hereby extending the comment periods, which were set to end on July 2, 2007 to September 3, 2007.

III. What is the Agency's Authority for Taking this Action?

Section 4(g)(2) of the Federal Insecticide, Fungicide, and Rodenticide Act (FIFRA), as amended, directs that, after submission of all data concerning a pesticide active ingredient, the Administrator shall determine whether pesticides containing such active ingredient are eligible for reregistration. Further provisions are made to allow a public comment period. However, the Administrator may extend the comment period if additional time for comment is requested. In this case, Grimmway Farms; Certis U.S.A., L.L.C; Washington Minor Crops Association; Washington State Potato Commission; Amalgamated Sugar Company; Methyl Bromide Industry Task Force; the Idaho Potato Growers Association; and other individuals have requested additional time to develop comments. The Agency believes that an additional 60 days is warranted.

List of Subjects

Environmental protection, Fumigants, Pesticides and pests.

Dated: June 13, 2007.

Peter Caulkins,

Acting Director, Special Review and Reregistration Division, Office of Pesticide Programs.

[FR Doc. E7–11796 Filed 6–19–07; 8:45 am]

BILLING CODE 6560–50–S

ENVIRONMENTAL PROTECTION AGENCY

[EPA–HQ–OPP–2007–0431; FRL–8135–4]

Mefluidide Risk Assessments; Notice of Availability

AGENCY: Environmental Protection Agency (EPA).

ACTION: Notice.

SUMMARY: This notice announces the availability of EPA's risk assessments, and related documents for the pesticide mefluidide, and opens a public comment period on these documents. The public is encouraged to suggest risk management ideas or proposals to address the risks identified. EPA is developing a Reregistration Eligibility Decision (RED) for mefluidide through a modified, 4-Phase public participation process that the Agency uses to involve the public in developing pesticide reregistration decisions. This is Phase 3 of the process. Through this program, EPA is ensuring that all pesticides meet current health and safety standards.

DATES: Comments must be received on or before August 20, 2007.

ADDRESSES: Submit your comments, identified by docket identification (ID) number EPA–HQ–OPP–2007–0431, by one of the following methods:

- *Federal eRulemaking Portal*: *http://www.regulations.gov*. Follow the on-line instructions for submitting comments.
- *Mail*: Office of Pesticide Programs (OPP) Regulatory Public Docket (7502P), Environmental Protection Agency, 1200 Pennsylvania Ave., NW., Washington, DC 20460–0001.
- *Delivery*: OPP Regulatory Public Docket (7502P), Environmental Protection Agency, Rm. S–4400, One Potomac Yard (South Building), 2777 S. Crystal Drive, Arlington, VA. Deliveries are only accepted during the Docket's normal hours of operation (8:30 a.m. to 4 p.m., Monday through Friday, excluding legal holidays). Special arrangements should be made for deliveries of boxed information. The Docket telephone number is (703) 305–5805.

Instructions: Direct your comments to docket ID number EPA–HQ–OPP–2007–0431. EPA's policy is that all comments received will be included in the docket without change and may be made available on-line at *http://www.regulations.gov*, including any personal information provided, unless the comment includes information claimed to be Confidential Business Information (CBI) or other information whose disclosure is restricted by statute. Do not submit information that you consider to be CBI or otherwise protected through regulations.gov or e-mail. The Federal regulations.gov website is an ''anonymous access'' system, which means EPA will not know your identity or contact information unless you provide it in the body of your comment. If you send an e-mail comment directly to EPA without going through regulations.gov, your e-mail address will be automatically captured and included as part of the comment that is placed in the docket and made available on the Internet. If you submit an electronic comment, EPA recommends that you include your name and other contact information in the body of your comment and with any disk or CD-ROM you submit. If EPA cannot read your comment due to technical difficulties and cannot contact you for clarification, EPA may not be able to consider your comment. Electronic files should avoid the use of special characters, any form of encryption, and be free of any defects or viruses.

Docket: All documents in the docket are listed in the docket index available in regulations.gov. To access the electronic docket, go to *http://www.regulations.gov*, select ''Advanced Search,'' then ''Docket Search.'' Insert the docket ID number where indicated and select the ''Submit'' button. Follow the instructions on the regulations.gov web site to view the docket index or access available documents. Although listed in the index, some information is not publicly available, e.g., CBI or other information whose disclosure is restricted by statute. Certain other material, such as copyrighted material, is not placed on the Internet and will be publicly available only in hard copy form. Publicly available docket materials are available either in the electronic docket at *http://www.regulations.gov*, or, if only available in hard copy, at the OPP Regulatory Public Docket in Rm. S–4400, One Potomac Yard (South Building), 2777 S. Crystal Drive, Arlington, VA. The hours of operation of this Docket Facility are from 8:30 a.m.

to 4 p.m., Monday through Friday, excluding legal holidays. The Docket telephone number is (703) 305–5805.

FOR FURTHER INFORMATION CONTACT:

Wilhelmena Livingston, Special Review and Reregistration Division (7508P), Office of Pesticide Programs, Environmental Protection Agency, 1200 Pennsylvania Ave., NW., Washington, DC 20460–0001; telephone number: 703 308–8025; fax number: (703) 308–8005; e-mail address: *livingston.wilhelmena@epa.gov*.

SUPPLEMENTARY INFORMATION:

I. General Information

A. Does this Action Apply to Me?

This action is directed to the public in general, and may be of interest to a wide range of stakeholders including environmental, human health, and agricultural advocates; the chemical industry; pesticide users; and members of the public interested in the sale, distribution, or use of pesticides. Since others also may be interested, the Agency has not attempted to describe all the specific entities that may be affected by this action. If you have any questions regarding the applicability of this action to a particular entity, consult the person listed under **FOR FURTHER INFORMATION CONTACT**.

B. What Should I Consider as I Prepare My Comments for EPA?

1. *Submitting CBI.* Do not submit this information to EPA through regulations.gov or e-mail. Clearly mark the part or all of the information that you claim to be CBI. For CBI information in a disk or CD ROM that you mail to EPA, mark the outside of the disk or CD ROM as CBI and then identify electronically within the disk or CD ROM the specific information that is claimed as CBI. In addition to one complete version of the comment that includes information claimed as CBI, a copy of the comment that does not contain the information claimed as CBI must be submitted for inclusion in the public docket. Information so marked will not be disclosed except in accordance with procedures set forth in 40 CFR part 2.

2. *Tips for preparing your comments.* When submitting comments, remember to:

i. Identify the document by docket ID number and other identifying information (subject heading, **Federal Register** date and page number).

ii. Follow directions. The Agency may ask you to respond to specific questions or organize comments by referencing a Code of Federal Regulations (CFR) part or section number.

iii. Explain why you agree or disagree; suggest alternatives and substitute language for your requested changes.

iv. Describe any assumptions and provide any technical information and/or data that you used.

v. If you estimate potential costs or burdens, explain how you arrived at your estimate in sufficient detail to allow for it to be reproduced.

vi. Provide specific examples to illustrate your concerns and suggest alternatives.

vii. Explain your views as clearly as possible, avoiding the use of profanity or personal threats.

viii. Make sure to submit your comments by the comment period deadline identified.

II. Background

A. What Action is the Agency Taking?

EPA is releasing for public comment its human health and environmental fate and effects risk assessments and related documents for mefluidide, and soliciting public comment on risk management ideas or proposals. Mefluidide is a plant growth regulator that is applied postemergence when needed. EPA developed the risk assessments and risk characterization for mefluidide through a modified version of its public process for making pesticide reregistration eligibility and tolerance reassessment decisions. Through these programs, EPA is ensuring that pesticides meet current standards under the Federal Insecticide, Fungicide, and Rodenticide Act (FIFRA) and the Federal Food, Drug, and Cosmetic Act (FFDCA), as amended by the Food Quality Protection Act of 1996 (FQPA).

Mefluidide is a plant growth regulator that is applied postemergence when needed. It is used to control ornamental and non-ornamental woody plants, ground cover, hedges trees, turf grasses, grass and broadleaf weeds by inhibiting plant cell division, stem elongation and seed head development. It is also registered for growth control of low maintenance turf on rights-of way, airports, public and industrial sites. Mefluidide products can also be used on residential lawns.

EPA is providing an opportunity, through this notice, for interested parties to provide comments and input on the Agency's risk assessments for mefluidide. Such comments and input could address, for example, the availability of additional data to further refine the risk assessments, such as usage/use information for non-agricultural uses, or could address the Agency's risk assessment methodologies and assumptions as applied to this specific pesticide.

Through this notice, EPA also is providing an opportunity for interested parties to provide risk management proposals or otherwise comment on risk management for mefluidide. Risks of concern associated with the use of mefluidide are: Acute (listed and non-listed) and chronic risks to mammals and birds, as well as acute (listed and non-listed) risk to terrestrial and semi-aquatic plants from use on ornamental turf. In targeting these risks of concern, the Agency solicits information on effective and practical risk reduction measures.

EPA seeks to achieve environmental justice, the fair treatment and meaningful involvement of all people, regardless of race, color, national origin, or income, in the development, implementation, and enforcement of environmental laws, regulations, and policies. To help address potential environmental justice issues, the Agency seeks information on any groups or segments of the population who, as a result of their location, cultural practices, or other factors, may have atypical, unusually high exposure to mefluidide, compared to the general population.

EPA is applying the principles of public participation to all pesticides undergoing reregistration and tolerance reassessment. The Agency's Pesticide Tolerance Reassessment and Reregistration; Public Participation Process, published in the **Federal Register** on May 14, 2004 (69 FR 26819) (FRL–7357–9), explains that in conducting these programs, the Agency is tailoring its public participation process to be commensurate with the level of risk, extent of use, complexity of the issues, and degree of public concern associated with each pesticide. For mefluidide, a modified, 4-Phase process with one comment period and ample opportunity for public consultation seems appropriate in view of its few complex issues. However, if as a result of comments received during this comment period EPA finds that additional issues warranting further discussion are raised, the Agency may lengthen the process and include a second comment period, as needed.

All comments should be submitted using the methods in **ADDRESSES**, and must be received by EPA on or before the closing date. Comments will become part of the Agency Docket for mefluidide. Comments received after the close of the comment period will be marked ''late.'' EPA is not required to consider these late comments.

B. What is the Agency's Authority for Taking this Action?

Section 4(g)(2) of FIFRA as amended directs that, after submission of all data concerning a pesticide active ingredient, ''the Administrator shall determine whether pesticides containing such active ingredient are eligible for reregistration,'' before calling in product-specific data on individual end-use products and either reregistering products or taking other ''appropriate regulatory action.''

List of Subjects

Environmental protection, Pesticides and pests.

Dated: June 12, 2007.

Peter Caulkins,

Acting Director, Special Review and Reregistration Division, Office of Pesticide Programs.

[FR Doc. E7–11943 Filed 6–19–07; 8:45 am]

BILLING CODE 6560–50–S

ENVIRONMENTAL PROTECTION AGENCY

[EPA–HQ–OPP–2007–0179; FRL–8133–5]

Issuance of Experimental Use Permits

AGENCY: Environmental Protection Agency (EPA).

ACTION: Notice.

SUMMARY: EPA has granted experimental use permits (EUPs) to the following pesticide applicants. An EUP permits use of a pesticide for experimental or research purposes only in accordance with the limitations in the permit.

FOR FURTHER INFORMATION CONTACT: Alan Reynolds, Biopesticides and Pollution Prevention Division (7511P), Office of Pesticide Programs, Environmental Protection Agency, 1200 Pennsylvania Ave., NW., Washington, DC 20460–0001; telephone number: (703) 605–0515; e-mail address: *reynolds.alan@epa.gov.*

SUPPLEMENTARY INFORMATION:

I. General Information

A. Does this Action Apply to Me?

This action is directed to the public in general. Although this action may be of particular interest to those persons who conduct or sponsor research on pesticides, the Agency has not attempted to describe all the specific entities that may be affected by this action. If you have any questions regarding the information in this action, consult the person listed under **FOR FURTHER INFORMATION CONTACT**.

B. How Can I Get Copies of this Document and Other Related Information?

1. *Docket.* EPA has established a docket for this action under docket identification (ID) number EPA–HQ–OPP–2007–0179. Publicly available docket materials are available either in the electronic docket at *http://www.regulations.gov*, or, if only available in hard copy, at the Office of Pesticide Programs (OPP) Regulatory Public Docket in Rm. S–4400, One Potomac Yard (South Bldg.), 2777 S. Crystal Dr., Arlington, VA. The hours of operation of this Docket Facility are from 8:30 a.m. to 4 p.m., Monday through Friday, excluding legal holidays. The Docket Facility telephone number is (703) 305–5805.

2. *Electronic access.* You may access this **Federal Register** document electronically through the EPA Internet under the ''**Federal Register**'' listings at *http://www.epa.gov/fedrgstr.*

II. EUPs

EPA has issued the following EUPs:

264–EUP–140. Extension. Bayer CropScience LP, 2. T.W. Alexander Drive, Research Triangle Park, NC 27709. This EUP allows the use of 1,008 pounds of cotton seed containing the following plant incorporated protectant (PIP) in the amount specified: 0.016 pounds of Cry1Ab protein and the genetic material necessary for its production (vector pTDL004) in Events T303–3 and T304–40 cotton. This EUP allows the use of this seed on 84 acres of Events T303–3 and T304–40 cotton. Four trial protocols will be conducted, including:

- Efficacy testing.
- Agronomic evaluation.
- Dissemination of pollen evaluation.
- Production of sample material for use in regulatory studies.

The program is authorized only in the States of Arizona, California, Georgia, Louisiana, Mississippi, North Carolina, South Carolina, and Texas. The EUP is effective from March 8, 2007 to May 1, 2008.

An exemption from tolerance has been established for residues of the active ingredient in or on all cotton commodities. One comment was received from a private citizen in response to the notice of receipt for this permit application, which was published in the **Federal Register** on January 17, 2007 (72 FR 1993) (FRL–8105–7). The private citizen indicated that she opposed testing under this EUP except in fully enclosed greenhouses, and expressed the viewpoint that the permittee should be required to request permission from neighbors prior to testing. The Agency understands the commenter's concerns. Under the Federal Insecticide, Fungicide, and Rodenticide Act (FIFRA), the Agency is tasked with reviewing applications for EUPs for any pesticide, including PIPs, and granting such applications to the extent that the conditions of FIFRA section 5, and the regulations thereunder, have been met (subject to such terms and conditions as the Agency determines are warranted). In this instance, EPA has determined that the relevant statutory and regulatory conditions have been met. In addition, there is nothing in FIFRA or in the Agency's regulations enacted thereunder that compels, and EPA does not otherwise require, a permittee to notify neighbors prior to testing as suggested. Finally, although certain containment provisions were required per the experimental program, the Agency did not require testing to be conducted in fully enclosed greenhouses because such a requirement was not necessary to mitigate risk.

67979–EUP–6. Issuance. Syngenta Seeds, Inc., P.O. Box 12257, Research Triangle Park, NC 27709. This EUP allows the use of 62,173 pounds of corn seed containing the following plant incorporated protectants (PIPs) in the amounts specified: 0.916 pounds of Vip3Aa20 protein and the genetic material necessary for its production (vector pNOV1300) in Event MIR 162 corn, 0.046 pounds of Cry1Ab protein and the genetic material necessary for its production (vector pZO1502) in Event Bt11 corn, and 0.013 pounds of mCry3A protein and the genetic material necessary for its production (vector pZM26) in Event MIR 604 corn. This EUP allows the use of this seed on 536 acres of MIR 162 corn; 220 acres of Bt11 corn; 199 acres of MIR 604 corn; 469 acres of Bt11 x MIR 162 corn; and 468 acres of Bt11 x MIR 162 x MIR 604 corn for 2007–2008. Five trial protocols will be conducted, including:

- Breeding and observation.
- Insect efficacy.
- Agronomic evaluation.
- Inbred and hybrid seed production.
- Regulatory studies.

The program is authorized only in the States of California, Colorado, Florida, Georgia, Hawaii, Idaho, Illinois, Indiana, Iowa, Kansas, Kentucky, Louisiana, Maryland, Minnesota, Mississippi, Missouri, Nebraska, New York, Ohio, Puerto Rico, South Dakota, Texas, and Wisconsin. The EUP is effective from March 21, 2007 to March 31, 2008.

Permanent or temporary exemptions from tolerance have been established for

residues of the active ingredients in or on all corn commodities.

67979–EUP–7. Issuance. Syngenta Seeds, Inc., P.O. Box 12257, Research Triangle Park, NC 27709. This EUP allows the use of 13,483 pounds of cotton seed containing the following plant incorporated protectants (PIPs) in the amounts specified: 0.010 pounds of Vip3Aa19 protein and the genetic material necessary for its production (vector pCOT1) in Event COT102 cotton and 0.082 pounds of Cry1Ab protein and the genetic material necessary for its production (vector pNOV4641) in Event COT67B cotton. This EUP allows the use of this seed on 28 acres of COT102 cotton; 28 acres of COT67B cotton; and 274 acres of COT102 x COT67B cotton. Five trial protocols will be conducted, including:

- Breeding and observation.
- Insect efficacy.
- Agronomic evaluation.
- Seed increase.
- Product characterization.

The program is authorized only in the States of Alabama, Arizona, Arkansas, California, Florida, Georgia, Hawaii, Louisiana, Mississippi, Missouri, North Carolina, Oklahoma, South Carolina, Tennessee, Texas, and Virginia. The EUP is effective from April 26, 2007 to April 30, 2008.

Permanent or temporary exemptions from tolerance have been established for residues of the active ingredients in or on all cotton commodities.

Authority: 7 U.S.C. 136c.

List of Subjects

Environmental protection, Experimental use permits.

Dated: June 6, 2007.

Janet L. Andersen,

Director, Biopesticides and Pollution Prevention Division, Office of Pesticide Programs.

[FR Doc. E7–11516 Filed 6–19–07; 8:45 am]

BILLING CODE 6560–50–S

ENVIRONMENTAL PROTECTION AGENCY

[EPA–HQ–OPP–2007–0404; FRL–8132–3]

Experimental Use Permit; Receipt of Application

AGENCY: Environmental Protection Agency (EPA).

ACTION: Notice.

SUMMARY: This notice announces receipt of an application 73049–EUP–U from Valent BioSciences Corporation requesting an experimental use permit (EUP) for the biochemical pesticide S-Abscisic Acid; (S)-5-(1-hydroxy-2,6,6-trimethyl-4-oxo-1-cyclohex-2-enyl)-3-methyl-penta-(2Z,4E)-dienoic Acid. The Agency has determined that the application may be of regional and national significance. Therefore, in accordance with 40 CFR 172.11(a), the Agency is soliciting comments on this application.

DATES: Comments must be received on or before July 20, 2007.

ADDRESSES: Submit your comments, identified by docket identification (ID) number EPA–HQ–OPP–2007–0404, by one of the following methods:

- *Federal eRulemaking Portal: http://www.regulations.gov*. Follow the on-line instructions for submitting comments.
- *Mail*: Office of Pesticide Programs (OPP) Regulatory Public Docket (7502P), Environmental Protection Agency, 1200 Pennsylvania Ave., NW., Washington, DC 20460–0001.
- *Delivery*: OPP Regulatory Public Docket (7502P), Environmental Protection Agency, Rm. S–4400, One Potomac Yard (South Bldg.), 2777 S. Crystal Dr., Arlington, VA. Deliveries are only accepted during the Docket's normal hours of operation (8:30 a.m. to 4 p.m., Monday through Friday, excluding legal holidays). Special arrangements should be made for deliveries of boxed information. The Docket Facility telephone number is (703) 305–5805.

Instructions: Direct your comments to docket ID number EPA–HQ–OPP–2007–0404. EPA's policy is that all comments received will be included in the docket without change and may be made available on-line at *http://www.regulations.gov*, including any personal information provided, unless the comment includes information claimed to be Confidential Business Information (CBI) or other information whose disclosure is restricted by statute. Do not submit information that you consider to be CBI or otherwise protected through regulations.gov or e-mail. The regulations.gov website is an ''anonymous access'' system, which means EPA will not know your identity or contact information unless you provide it in the body of your comment. If you send an e-mail comment directly to EPA without going through regulations.gov, your e-mail address will be automatically captured and included as part of the comment that is placed in the docket and made available on the Internet. If you submit an electronic comment, EPA recommends that you include your name and other contact information in the body of your comment and with any disk or CD-ROM you submit. If EPA cannot read your comment due to technical difficulties and cannot contact you for clarification, EPA may not be able to consider your comment. Electronic files should avoid the use of special characters, any form of encryption, and be free of any defects or viruses.

Docket: All documents in the docket are listed in the docket index available in regulations.gov. To access the electronic docket, go to *http://www.regulations.gov*, select ''Advanced Search,'' then ''Docket Search.'' Insert the docket ID number where indicated and select the ''Submit'' button. Follow the instructions on the regulations.gov website to view the docket index or access available documents. Although listed in the index, some information is not publicly available, e.g., CBI or other information whose disclosure is restricted by statute. Certain other material, such as copyrighted material, is not placed on the Internet and will be publicly available only in hard copy form. Publicly available docket materials are available either in the electronic docket at *http://www.regulations.gov*, or, if only available in hard copy, at the OPP Regulatory Public Docket in Rm. S–4400, One Potomac Yard (South Bldg.), 2777 S. Crystal Dr., Arlington, VA. The hours of operation of this Docket Facility are from 8:30 a.m. to 4 p.m., Monday through Friday, excluding legal holidays. The Docket Facility telephone number is (703) 305–5805.

FOR FURTHER INFORMATION CONTACT: Chris Pfeifer, Biopesticides and Pollution Prevention Division (7511P), Office of Pesticide Programs, Environmental Protection Agency, 1200 Pennsylvania Ave., NW., Washington, DC 20460–0001; telephone number: (703) 308–0031; e-mail address: *pfeifer.chris@epa.gov*.

SUPPLEMENTARY INFORMATION:

I. General Information

A. Does this Action Apply to Me?

This action is directed to the public in general. This action may, however, be of interest to those persons who are or may be required to conduct testing of chemical substances under the Federal Food, Drug, and Cosmetic Act (FFDCA) or the Federal Insecticide, Fungicide, and Rodenticide Act (FIFRA). Since other entities may also be interested, the Agency has not attempted to describe all the specific entities that may be affected by this action. If you have any questions regarding the applicability of this action to a particular entity, consult the person listed under **FOR FURTHER INFORMATION CONTACT**.

B. What Should I Consider as I Prepare My Comments for EPA?

1. *Submitting CBI.* Do not submit this information to EPA through regulations.gov or e-mail. Clearly mark the part or all of the information that you claim to be CBI. For CBI information in a disk or CD-ROM that you mail to EPA, mark the outside of the disk or CD-ROM as CBI and then identify electronically within the disk or CD-ROM the specific information that is claimed as CBI. In addition to one complete version of the comment that includes information claimed as CBI, a copy of the comment that does not contain the information claimed as CBI must be submitted for inclusion in the public docket. Information so marked will not be disclosed except in accordance with procedures set forth in 40 CFR part 2.

2. *Tips for preparing your comments.* When submitting comments, remember to:

i. Identify the document by docket ID number and other identifying information (subject heading, **Federal Register** date and page number).

ii. Follow directions. The Agency may ask you to respond to specific questions or organize comments by referencing a Code of Federal Regulations (CFR) part or section number.

iii. Explain why you agree or disagree; suggest alternatives and substitute language for your requested changes.

iv. Describe any assumptions and provide any technical information and/or data that you used.

v. If you estimate potential costs or burdens, explain how you arrived at your estimate in sufficient detail to allow for it to be reproduced.

vi. Provide specific examples to illustrate your concerns and suggest alternatives.

vii. Explain your views as clearly as possible, avoiding the use of profanity or personal threats.

viii. Make sure to submit your comments by the comment period deadline identified.

II. Background

Valent BioSciences Corporation, 870 Technology Way, Libertyville, IL 60048, has submitted an EUP application, 70349–EUP–U, for use of the biochemical pesticide S-Abscisic Acid (ABA) on table and wine grapes. As required with a food use, a ''Request for a Temporary Exemption from the Requirement of a Tolerance'' was published in the **Federal Register** on April 30, 2007 (72 FR 21263) (FRL–8124–7). The proposed active ingredient is a well known plant growth regulator, and is expected to enhance fruit coloring. ABA will be applied from two to three weeks before harvest in one or two sprays of 50 to 200 parts per million (ppm) each in a water volume of 75 to 200 gallons per acre. The application proposes to treat 5,000 acres annually. Shipment/use dates are expected to begin in August of 2008 and to continue until the permit's proposed expiration in August of 2010. Participating states include: California, Michigan, New York, Oregon, Texas, and Washington.

III. What Action is the Agency Taking?

Following the review of the Valent Biosciences Corporation application and any comments and data received in response to this notice, EPA will decide whether to issue or deny the EUP request for this EUP program, and if issued, the conditions under which it is to be conducted. Any issuance of an EUP will be announced in the **Federal Register**.

IV. What is the Agency's Authority for Taking this Action?

The Agency's authority for taking this action is under FIFRA section 5.

List of Subjects

Environmental protection, Experimental use permits.

Dated: June 6, 2007.

Janet L. Andersen,

Director, Biopesticides and Pollution Prevention Division, Office of Pesticide Programs.

[FR Doc. E7–11521 Filed 6–19–07; 8:45 am]

BILLING CODE 6560–50–S

OFFICE OF SCIENCE AND TECHNOLOGY POLICY

Aeronautics Science and Technology Subcommittee, Committee on Technology, National Science and Technology Council; Notice of Meeting

ACTION: Notice of Meeting—Public Consultation on the National Aeronautics Research and Development Plan and Related Infrastructure Plan.

SUMMARY: The Aeronautics Science and Technology Subcommittee (ASTS) of the National Science and Technology Council's (NSTC) Committee on Technology will hold a public meeting to discuss development of the National Aeronautics Research and Development (R&D) Plan and the related Aeronautics Research, Development, Test and Evaluation (RDT&E) Infrastructure Plan. Executive Order (E.O.) 13419—National Aeronautics Research and Development—signed December 20, 2006, calls for the development of these Plans within one year. The Plans are to be guided by the National Aeronautics R&D Policy that was developed by the NSTC and endorsed by E.O. 13419.

Dates and Addresses: The meeting will be held on Wednesday, July 11, 2007, from 2 p.m. to 4:30 p.m. in room 233 of the Duke Energy Center, 525 Elm Street, Cincinnati, Ohio 45202. Duke Energy Center information is available at the: *http://www.duke-energycenter.com/700/mapsdirectionsparking.asp* Web site.

Registration is required because seating is limited and will be on a first come, first served basis.

Registration Requests: Registration requests (including your name, address, and phone number) should be submitted to Jon Montgomery, Office of Aerospace and Automotive Industries, Room 4020, U.S. Department of Commerce, 1401 Constitution Avenue, NW., Washington, DC 20230, telephone (202) 482–3353, or e-mail your request to *Jon.Montgomery@mail.doc.gov.* Registration requests should be submitted no later than 4 p.m. (EST) on Friday, July 6, 2007.

SUPPLEMENTARY INFORMATION: E.O. 13419 and the National Aeronautics R&D Policy call for executive departments and agencies conducting aeronautics R&D to engage industry, academia and other non-Federal stakeholders in support of government planning and performance of aeronautics R&D. At this meeting, ASTS members will discuss the structure and content of the National Aeronautics R&D Plan and related Aeronautics RDT&E Infrastructure Plan. The main purpose of the meeting is to obtain facts and information from individuals on the national aeronautics R&D goals and objectives related to: Mobility; national defense; aviation safety; aviation security; energy and the environment; and, aeronautics research, development, test and evaluation infrastructure.

Additional information and links to E.O. 13419 and the National Aeronautics R&D Policy are available by visiting the Office of Science and Technology Policy's NSTC Web site at: *http://www.ostp.gov/nstc/aeroplans* or by calling 202–456–6046.

M. David Hodge,

Operations Manager, OSTP.

[FR Doc. E7–11978 Filed 6–19–07; 8:45 am]

BILLING CODE 3170–W7–P

FEDERAL COMMUNICATIONS COMMISSION

Notice of Public Information Collection(s) Being Submitted for Review to the Office of Management and Budget

June 6, 2007.

SUMMARY: The Federal Communications Commission, as part of its continuing effort to reduce paperwork burden invites the general public and other Federal agencies to take this opportunity to comment on the following information collection(s), as required by the Paperwork Reduction Act (PRA) of 1995, Public Law 104–13. An agency may not conduct or sponsor a collection of information unless it displays a currently valid control number. No person shall be subject to any penalty for failing to comply with a collection of information subject to the Paperwork Reduction Act (PRA) that does not display a valid control number. Comments are requested concerning (a) whether the proposed collection of information is necessary for the proper performance of the functions of the Commission, including whether the information shall have practical utility; (b) the accuracy of the Commission's burden estimate; (c) ways to enhance the quality, utility, and clarity of the information collected; and (d) ways to minimize the burden of the collection of information on the respondents, including the use of automated collection techniques or other forms of information technology.

DATES: Written Paperwork Reduction Act (PRA) comments should be submitted on or before August 20, 2007. If you anticipate that you will be submitting PRA comments, but find it difficult to do so within the period of time allowed by this notice, you should advise the FCC contact listed below as soon as possible.

ADDRESSES: Direct all PRA comments to Jasmeet K. Seehra, Office of Management and Budget, Room 10236 NEOB, Washington, DC 20503, (202) 395–3123, or via fax at 202–395–5167 or via Internet at *Jasmeet_K._Seehra@omb.eop.gov* and to *Judith-B.Herman@fcc.gov,* Federal Communications Commission, Room 1–B441, 445 12th Street, SW., Washington, DC 20554 or an e-mail to *PRA@fcc.gov.* If you would like to obtain or view a copy of this information collection after the 60-day comment period, you may do so by visiting the FCC PRA Web page at: *http://www.fcc.gov/omd/pra.*

FOR FURTHER INFORMATION CONTACT: For additional information or copies of the information collection(s), contact Judith B. Herman at 202–418–0214 or via the Internet at *Judith-B.Herman@fcc.gov.*

SUPPLEMENTARY INFORMATION:

OMB Control Number: 3060–0779.

Title: Amendment of Part 90 of the Commission's Rules to Provide for Use of the 220 MHz Band by Private land Mobile Radio Service, PR Docket No. 89–552.

Form No.: N/A.

Type of Review: Extension of a currently approved collection.

Respondents: Business or other for-profit, not-for-profit institutions, and State, local and tribal government.

Number of Respondents: 2,313 respondents; 2,313 responses.

Estimated Time per Response: 2–20 hours.

Frequency of Response: On occasion reporting requirement and third party disclosure requirement.

Obligation to Respond: Required to obtain or retain benefits.

Total Annual Burden: 23,433 hours.

Total Annual Cost: $657,500.

Privacy Act Impact Assessment: N/A.

Nature and Extent of Confidentiality: There is no need for confidentiality.

Needs and Uses: The Commission will submit this extension (no change in the reporting and third party disclosure requirements) to the OMB after this 60-day comment period to obtain the full three-year clearance from them.

This information collection includes rules to govern the future operation and licensing of the 220–222 MHz band (220 MHz service). In establishing this licensing plan, the FCC's goal is to establish a flexible regulatory framework that allows for efficient licensing of the 220 MHz service, eliminates unnecessary regulatory burdens, and enhances the competitive potential of the 220 MHz service in the mobile service marketplace. However, as with any licensing and operational plan for a radio service, a certain number of regulatory and information collection and third party disclosure requirement burdens are necessary to verify licensee compliance with FCC rules.

The rule sections that are included in this collection are 47 CFR Sections 90.20, 90.729, 90.769, 90.767, 90.763, 90.771 and 90.743.

The various information reporting and third party requirements (verification), and the requirement that licensees coordinate and provide written consent, concurrence or agreement with other licensees, will be used by the Commission to verify licensee compliance with Commission rules and regulation and to ensure that licensees continue to fulfill their statutory responsibilities in accordance with the Communications Act of 1934, as amended. Such information has been used in the past and will continue to be used to minimize interference, verify that applicants are legally, technically, and financially qualified to hold licenses and to determine compliance with Commission rules.

Federal Communications Commission.

Marlene H. Dortch,

Secretary.

[FR Doc. E7–11598 Filed 6–19–07; 8:45 am]

BILLING CODE 6712–01–P

FEDERAL MARITIME COMMISSION

Notice of Agreements Filed

The Commission hereby gives notice of the filing of the following agreements under the Shipping Act of 1984. Interested parties may submit comments on agreements to the Secretary, Federal Maritime Commission, Washington, DC 20573, within ten days of the date this notice appears in the **Federal Register**. Copies of agreements are available through the Commission's Office of Agreements (202–523–5793 or *tradeanalysis@fmc.gov*).

Agreement No.: 010979–045.

Title: Caribbean Shipowners Association.

Parties: Bernuth Lines, Ltd.; CMA CGM, S.A.; Crowley Liner Services, Inc.; Interline Connection, N.V.; Seaboard Marine, Ltd.; Seafreight Line, Ltd.; Tropical Shipping and Construction Co., Ltd.; and Zim Integrated Shipping Services, Ltd.

Filing Party: Joe Espinosa, Agreement Administrator; Caribbean Shipowners Association; 101 NE. Third Avenue, Suite 1500; Fort Lauderdale, FL 33301–1181.

Synopsis: The amendment would add Sea Star Line Caribbean, LLC as a party to the agreement.

Agreement No.: 011284–063.

Title: Ocean Carrier Equipment Management Association Agreement.

Parties: APL Co. Pte. Ltd.; American President Lines, Ltd.; A.P. Moller-Maersk A/S trading under the name of Maersk Line; CMA CGM, S.A.; Atlantic Container Line; Companhia Libra de Navegacao; Compania Libra de Navegacion Uruguay S.A.; Compania Sudamericana de Vapores, S.A.; COSCO Container Lines Company Limited; Crowley Maritime Corporation; Evergreen Line Joint Service Agreement; Hamburg-Sud; Hapag-Lloyd AG; Hapag-Lloyd USA LLC; Hanjin Shipping Co., Ltd.; Hyundai Merchant Marine Co.

Ltd.; Kawasaki Kisen Kaisha, Ltd.; Mitsui O.S.K. Lines Ltd.; Nippon Yusen Kaisha Line; Norasia Container Lines Limited; Orient Overseas Container Line Limited; Yang Ming Marine Transport Corp.; and Zim Integrated Shipping Services, Ltd.

Filing Party: Jeffrey F. Lawrence, Esq. and Donald J. Kassilke, Esq.; Sher & Blackwell LLP; 1850 M Street, NW.; Suite 900; Washington, DC 20036.

Synopsis: The amendment would add China Shipping Container Lines Co., Ltd. and China Shipping Container Lines (Hong Kong) Co., Ltd. as parties to the agreement.

Agreement No.: 011953–002.

Title: Florida Shipowners Group Agreement.

Parties: The member lines of the Caribbean Shipowners Association and the Florida-Bahamas Shipowners and Operators Association.

Filing Party: Joe Espinosa, Agreement Administrator; Florida Shipowners Group Agreement; 101 NE. Third Avenue, Suite 1500; Fort Lauderdale, FL 33301–1181.

Synopsis: The amendment makes several membership changes to the underlying constituent agreement parties.

Dated: June 15, 2007.

By Order of the Federal Maritime Commission.

Karen V. Gregory,

Assistant Secretary.

[FR Doc. E7–11925 Filed 6–19–07; 8:45 am]

BILLING CODE 6730–01–P

FEDERAL MARITIME COMMISSION

Ocean Transportation Intermediary License; Revocations

The Federal Maritime Commission hereby gives notice that the following Ocean Transportation Intermediary licenses have been revoked pursuant to section 19 of the Shipping Act of 1984 (46 U.S.C. Chapter 409) and the regulations of the Commission pertaining to the licensing of Ocean Transportation Intermediaries, 46 C.F.R. Part 515, effective on the corresponding date shown below:

License Number: 018944N.
Name: Ampac Transline, Inc.
Address: 1533 W. 139th Street, Gardena, CA 90249.
Date Revoked: June 9, 2007.
Reason: Failed to maintain a valid bond.

License Number: 011263F.
Name: Bugatti Freight Int'l (USA) Inc.
Address: 150–40 183rd Street, Ste. 208, Jamaica, NY 11413.
Date Revoked: May 24, 2007.
Reason: Failed to maintain a valid bond.

License Number: 006064N.
Name: Container Management, Inc.
Address: 3250 NW. North River Drive, Miami, FL 33142.
Date Revoked: May 20, 2007.
Reason: Failed to maintain a valid bond.

License Number: 013305N.
Name: Etar, Inc. dba Etar Lines.
Address: 419 S. Hindry Avenue, Inglewood, CA 90301.
Date Revoked: September 14, 2005.
Reason: Failed to maintain a valid bond.

License Number: 017632N.
Name: Global Logix, Inc.
Address: 690 Lunt Ave., Elk Grove Village, IL 60007.
Date Revoked: May 30, 2007.
Reason: Failed to maintain a valid bond.

License Number: 017501NF.
Name: Hepta Run, Inc.
Address: 3400 Rogerdale Rd., Houston, TX 77042.
Date Revoked: June 2, 2007.
Reason: Failed to maintain valid bonds.

License Number: 009704N.
Name: Hi-Best Air Ocean, Inc.
Address: 5777 W. Century Blvd., Ste. 930, Los Angeles, CA 90045.
Date Revoked: May 26, 2007.
Reason: Failed to maintain a valid bond.

License Number: 004333F.
Name: Jose Guillermmo Saavedrea dba Aero-Mar-Terra Forwarding.
Address: 1027 Main Street, Ste. B, Pasadena, TX 77506.
Date Revoked: May 20, 2007.
Reason: Failed to maintain a valid bond.

License Number: 018890N.
Name: Kingsmart Express Container, Inc.
Address: 219 S. Chandler Ave., #E, Monterey Park, CA 91754
Date Revoked: June 5, 2007.
Reason: Surrendered license voluntarily.

License Number: 003557NF.
Name: Nexus International Express, Inc.
Address: 399 W. Victoria Street, Carson, CA 90248
Date Revoked: June 1, 2007.
Reason: Failed to maintain valid bonds.

License Number: 016898F.
Name: Transcontinental Freightways, Inc.
Address: 7007 NW. 30th Street, Miami, FL 33122
Date Revoked: May 24, 2007.
Reason: Failed to maintain a valid bond.

License Number: 018113F.
Name: UFO International Freight Forwarder Corporation.
Address: 15224 West State Street, Westminster, CA 92683.
Date Revoked: May 19, 2007.
Reason: Failed to maintain a valid bond.

Sandra L. Kusumoto,

Director,Bureau of Certification and Licensing.

[FR Doc. E7–11923 Filed 6–19–07; 8:45 am]

BILLING CODE 6730–01–P

FEDERAL MARITIME COMMISSION

Ocean Transportation Intermediary License Reissuances

Notice is hereby given that the following Ocean Transportation Intermediary licenses have been reissued by the Federal Maritime Commission pursuant to section 19 of the Shipping Act of 1984 (46 U.S.C. Chapter 409) and the regulations of the Commission pertaining to the licensing of Ocean Transportation Intermediaries, 46 CFR part 515.

License No.	Name/address	Date reissued
002586F	CBE USA International Inc., 8451 Market Street,Houston, TX 77029	February 20, 2006.
016290F	Delmar Logistics, Inc.,9310 S. La Cienega Blvd.,Inglewood, CA 90301	May 9, 2007.

Sandra L. Kusumoto,
Director, Bureau of Certification and Licensing.

[FR Doc. E7–11937 Filed 6–19–07; 8:45 am]

BILLING CODE 6730–01–P

FEDERAL RESERVE SYSTEM

Consumer Advisory Council; Solicitation of Nominations for Membership

AGENCY: Board of Governors of the Federal Reserve System.

ACTION: Notice.

SUMMARY: The Board is inviting the public to nominate qualified individuals for appointment to its Consumer Advisory Council, whose membership represents interests of consumers, communities, and the financial services industry. New members will be selected for three-year terms that will begin in January 2008. The Board expects to announce the selection of new members in early January.

DATES: Nominations must be received by August 24, 2007.Nominations not received by August 24 may not be considered.

ADDRESSES: Nominations must include a resume for each nominee. Electronic nominations are preferred. The appropriate form can be accessed at: *http://www.federalreserve.gov/forms/cacnominationform.cfm.*

If electronic submission is not feasible, the nominations can be mailed (not sent by facsimile) to Sheila Maith, Assistant Director and Community Affairs Officer, Division of Consumer and Community Affairs, Board of Governors of the Federal Reserve System, Washington, DC 20551.

FOR FURTHER INFORMATION CONTACT: Jennifer Kerslake, Secretary of the Council, Division of Consumer and Community Affairs, (202) 452–6470, Board of Governors of the Federal Reserve System, Washington, DC 20551.

SUPPLEMENTARY INFORMATION: The Consumer Advisory Council was established in 1976 at the direction of the Congress to advise the Federal Reserve Board on the exercise of its duties under the Consumer Credit Protection Act and on other consumer-related matters. The Council by law represents the interests both of consumers and of the financial services industry (15 U.S.C. 1691(b)). Under the Rules of Organization and Procedure of the Consumer Advisory Council (12 CFR 267.3), members serve three-year terms that are staggered to provide the Council with continuity.

New members will be selected for terms beginning January 1, 2008, to replace members whose terms expire in December 2007. The Board expects to announce its appointment of new members in early January. Nomination letters should include:

- A resume;
- Information about past and present positions held by the nominee, dates, and description of responsibilities;
- A description of special knowledge, interests, or experience related to community reinvestment, consumer protection regulations, consumer credit, or other consumer financial services;
- Full name, title, organization name, organization description for both the nominee and the nominator;
- Current address, e-mail address, telephone and fax numbers for both the nominee and the nominator; and
- Positions held in community organizations, and on councils and boards.

Individuals may nominate themselves.

The Board is interested in candidates who have familiarity with consumer financial services, community reinvestment, and consumer protection regulations, and who are willing to express their views. Candidates do not have to be experts on all levels of consumer financial services or community reinvestment, but they should possess some basic knowledge of the area. They must be able and willing to make the necessary time commitment to participate in conference calls, and prepare for and attend meetings three times a year (usually for two days, including committee meetings). The meetings are held at the Board's offices in Washington, DC. The Board pays travel expenses, lodging, and a nominal honorarium.

In making the appointments, the Board will seek to complement the background of continuing Council members in terms of affiliation and geographic representation, and to ensure the representation of women and minority groups. The Board may consider prior years' nominees and does not limit consideration to individuals nominated by the public when making its selection.

Council members whose terms end as of December 31, 2007, are:

Stella Adams, Founder and Chief Executive Officer, S J Adams Consulting, Durham, North Carolina

Faith Anderson, Vice President—Legal & Compliance and General Counsel, American Airlines Federal Credit Union, Fort Worth, Texas

Carolyn Carter, Attorney, National Consumer Law Center, Boston, Massachusetts

Michael Cook, Vice President and Assistant Treasurer, Wal-Mart Stores, Inc., Bentonville, Arkansas

Donald S. Currie, Executive Director, Community Development Corporation of Brownsville, Brownsville, Texas

Kurt Eggert, Associate Professor of Law and Director of Clinical Legal Education, Chapman University School of Law, Orange, California

Deborah Hickok, Former Vice President, MoneyGram Payment Systems, Inc., Ooltewah, Tennessee

Lisa Sodeika, Senior Vice President—Corporate Affairs, HSBC North America Holdings Inc., Prospect Heights, Illinois

Anselmo Villarreal, Executive Director, LaCasa de Esperanza, Inc., Waukesha, Wisconsin

Marva E. Williams, Senior Program Officer, Chicago Local Initiatives Support Corporation, Chicago, Illinois

Council members whose terms continue through 2008 and 2009 are:

Dorothy Bridges, Chief Executive Officer and President, Franklin National Bank of Minneapolis, Minneapolis, Minnesota

Tony T. Brown, President and Chief Executive Officer, Uptown Consortium, Inc., Cincinnati, Ohio

Jason Engel, Vice President & Chief Regulatory Counsel, Experian, Costa Mesa, California

Joseph L. Falk, Consultant, Akerman Senterfitt, Miami, Florida

Louise J. Gissendaner, Senior Vice President, Director of Community Development, Fifth Third Bank, Cleveland, Ohio

Patricia A. Hasson, President, Consumer Credit Counseling Service of Delaware Valley, Inc., Philadelphia, Pennsylvania

Thomas P. James, Senior Assistant Attorney General, Consumer Counsel, Office of the Illinois Attorney General, Consumer Fraud Bureau, Chicago, Illinois

Sarah Ludwig, Executive Director, Neighborhood Economic Development Advocacy Project, New York, New York

Mark K. Metz, Senior Vice President and Deputy General Counsel, Wachovia Corporation, Charlotte, North Carolina

Lance Morgan, President and Chief Executive Officer, Ho-Chunk, Incorporated, Winnebago Tribe of Nebraska, Winnebago, Nebraska

Joshua Peirez, Chief Payment System Integrity Officer, MasterCard Worldwide, Purchase, New York

Anna McDonald Rentschler, BSA Officer, Central Bancompany, Jefferson City, Missouri
Edna Sawady, Managing Director, Market Innovations, Inc., New York, New York
Faith Arnold Schwartz, Senior Vice President, Enterprise Risk Management and Public Affairs, Option One Mortgage Corporation, Washington, District of Columbia
Edward Sivak, Director of Policy and Evaluation, Enterprise Corporation of the Delta, Jackson, Mississippi
H. Cooke Sunoo, Director, Asian Pacific Islander Small Business Program, Los Angeles, California
Stergios ''Terry'' Theologides, Executive Vice President Corporate Affairs and General Counsel, New Century Financial Corporation, Irvine, California
Linda Tinney, Vice President, Community Development West Metro Region Manager, U.S. Bank, Denver, Colorado
Luz L. Urrutia, President and Chief Operating Officer, Banuestra Financial Corporation, Roswell, Georgia
Alan White, Supervising Attorney, Community Legal Services, Philadelphia, Pennsylvania

Board of Governors of the Federal Reserve System, June 14, 2007.

Jennifer J. Johnson,

Secretary of the Board.

[FR Doc. E7–11818 Filed 6–18–07; 8:45 am]

BILLING CODE 6210–01–P

FEDERAL RESERVE SYSTEM

Sunshine Act Meeting

AGENCY HOLDING THE MEETING: Board of Governors of the Federal Reserve System.

TIME AND DATE: 12:00 p.m., Monday, June 25, 2007.

PLACE: Marriner S. Eccles Federal Reserve Board Building, 20th and C Streets, N.W., Washington, D.C. 20551.

STATUS: Closed.

MATTERS TO BE CONSIDERED:

1. Personnel actions (appointments, promotions, assignments, reassignments, and salary actions) involving individual Federal Reserve System employees.
2. Any items carried forward from a previously announced meeting.

FOR FURTHER INFORMATION CONTACT: Michelle Smith, Director, or Dave Skidmore, Assistant to the Board, Office of Board Members at 202–452–2955.

SUPPLEMENTARY INFORMATION: You may call 202–452–3206 beginning at approximately 5 p.m. two business days before the meeting for a recorded announcement of bank and bank holding company applications scheduled for the meeting; or you may contact the Board's Web site at *http://www.federalreserve.gov* for an electronic announcement that not only lists applications, but also indicates procedural and other information about the meeting.

Board of Governors of the Federal Reserve System, June 15, 2007.

Robert deV. Frierson,

Deputy Secretary of the Board.

[FR Doc. 07–3053 Filed 6–15–07; 4:10 pm]

BILLING CODE 6210–01–S

DEPARTMENT OF HEALTH AND HUMAN SERVICES

Office of the Secretary

Establishment of the National Biodefense Science Board

AGENCY: Office of the Assistant Secretary for Preparedness and Response.

ACTION: Notice.

SUMMARY: The Office of the Secretary announces establishment of the National Biodefense Science Board. The Board will provide expert advice and guidance to the Secretary on scientific, technical and other matters of special interest to the Department of Health and Human Services regarding activities to prevent, prepare for and respond to adverse health effects of public health emergencies resulting from current and future chemical, biological, nuclear, and radiological agents, whether naturally occurring, accidental, or deliberate. Resumes or curricula vitae from qualified individuals who wish to be considered for membership on the Board are currently being accepted.

To Submit a resume or curriculum vitae, send e-mail to *nbsbnominations@hhs.gov.*

FOR FURTHER INFORMATION CONTACT: Dr. Susan Cibulsky at 202–260–7000 or *nbsbquestions@hhs.gov.* The Board's charter and additional information may be accessed online at *http://www.hhs.gov/aspr/omsph/nbsb.*

SUPPLEMENTARY INFORMATION:

Authority

Section 402 of the Pandemic and All-Hazards Preparedness Act (Pub. L. 109–417) (codified at Section 319M of Title III of the Public Health Service Act (42 U.S.C. 247d–7f), as amended) directs the Secretary to establish the National Biodefense Science Board.

Function

The Board shall provide expert advice and guidance to the Secretary on scientific, technical, and other matters of special interest to the Department of Health and Human Services regarding current and future chemical, biological, nuclear, and radiological agents, whether naturally occurring, accidental, or deliberate. Duties include, but are not limited to, (1) advising the Secretary on current and future trends, challenges, and opportunities presented by advances in biological and life sciences, biotechnology, and genetic engineering with respect to threats posed by naturally occurring infectious diseases and chemical, biological, radiological, and nuclear agents; (2) at the request of the Secretary, reviewing and considering any information and findings received from the working groups established under the authority of the Board; and (3) at the request of the Secretary, providing recommendations and findings for expanded, intensified, and coordinated biodefense research and development activities.

Structure

The Board shall consist of 13 voting members, including the Chairperson; additionally, there may be non-voting *ex officio* members. Members and the Chairperson shall be appointed by the Secretary from the among the Nation's preeminent scientific, public health and medical experts, as follows: (a) Such Federal officials as the Secretary determines are necessary to support the functions of the Board; (b) four individuals from the pharmaceutical, biotechnology and device industries, (c) four academicians; (d) five other members as determined appropriate by the Secretary, one of whom must be a practicing health care professional and one of whom must be from an organization representing health care consumers. Additional members will be selected from among state and local governments, emergency medical responders, other components of the public health community, and organizations representing other appropriate stakeholders. Members shall be invited to serve overlapping three-year terms. Unless renewed by appropriate action, the Board shall terminate five years after the date on which it was established.

Dated: May 31, 2007.

William C. Vanderwagon,

Assistant Secretary for Preparedness and Response.

[FR Doc. 07–3032 Filed 6–19–07; 8:45 am]

BILLING CODE 4150–37–M

DEPARTMENT OF HEALTH AND HUMAN SERVICES

Office of the Secretary

Findings of Research Misconduct

AGENCY: Office of the Secretary, HHS.

ACTION: Notice.

SUMMARY: Notice is hereby given that the Office of Research Integrity (ORI) and the Assistant Secretary for Health have taken final action in the following case:

Carlos A. Murillo, M.D., University of Texas Medical Branch at Galveston: Based on the report of an inquiry conducted by the University of Texas Medical Branch at Galveston (UTMB) and additional analysis and information obtained by the Office of Research Integrity during its oversight review, the U.S. Public Health Service (PHS) found that Carlos A. Murillo, M.D., former Surgical Resident, Department of Surgery, UTMB, engaged in research misconduct in research supported by National Institute of Diabetes and Digestive and Kidney Diseases (NIDDK), National Institutes of Health (NIH), grants R01 DK48498 and T32 DK07639.

Specifically, Dr. Murillo falsified research on the amelioration by antisense RNA (siRNA) of dextran-induced colonic toxicity in mice. He altered the concentrations of dextran solution fed to mice to induce colonic inflammation, by intentionally including little or no dextran in the drinking water of siRNA treated mice, so that the animals that received siRNA would have few or no colonic lesions.

Dr. Murillo has entered into a Voluntary Exclusion Agreement (Agreement) in which he has voluntarily agreed, for a period of three (3) years, beginning on May 30, 2007:

(1) That any institution that submits an application for PHS support for a research project on which Dr. Murillo's participation is proposed or that uses him in any capacity on PHS support research, or that submits a report of PHS-funded research in which he is involved, must concurrently submit a plan for supervision of his duties to the funding agency for approval; the supervisory plan must be designed to ensure the scientific integrity of Dr. Murillo's research contribution; Dr. Murillo agrees to ensure that a copy of the supervisory plan is also submitted to ORI by the institution and agrees that he will not participate in any PHS-supported research until such a supervision plan is submitted to ORI;

(2) to exclude himself from serving in any advisory capacity to PHS, including but not limited to service on any PHS advisory committee, board, and/or peer review committee, or as a consultant; and

(3) to request retraction of the abstract entitled ''Inhibition of Phosphoinositol 3-kinase Using Anti-p85 siRNA Attenuates Dextran-Sulfate-Induced Inflammatory Bowel Disease'' (*Gastroenterology* 126:A49, 2004), by signing the letter of retraction prepared by ORI attached as Attachment 2 and made part of the Agreement.

FOR FURTHER INFORMATION CONTACT: Director, Division of Investigative Oversight, Office of Research Integrity, 1101 Wootton Parkway, Suite 750, Rockville, MD 20852, (240) 453–8800.

John Dahlberg,

Acting Director,Office of Research Integrity.

[FR Doc. E7–11908 Filed 6–19–07; 8:45 am]

BILLING CODE 4150–31–P

DEPARTMENT OF HEALTH AND HUMAN SERVICES

Centers for Disease Control and Prevention

[30Day-07–06BF]

Agency Forms Undergoing Paperwork Reduction Act Review

The Centers for Disease Control and Prevention (CDC) publishes a list of information collection requests under review by the Office of Management and Budget (OMB) in compliance with the Paperwork Reduction Act (44 U.S.C. Chapter 35). To request a copy of these requests, call the CDC Reports Clearance Officer at (404) 639–5960 or send an e-mail to *omb@cdc.gov.* Send written comments to CDC Desk Officer, Office of Management and Budget, Washington, DC or by fax to (202) 395–6974. Written comments should be received within 30 days of this notice.

Proposed Project

Assessment and Evaluation of the Role of Care Coordination (Case Management) in Improving Access and Care within the Spina Bifida Clinic System—New—National Center for Birth Defects and Developmental Disabilities (NCBDDD), Centers for Disease Control and Prevention (CDC).

Background and Brief Description

CDC is requesting a one-year approval from the Office of Management and Budget to collect information about the effectiveness of care coordination for patients with spina bifida. Studies have shown that care coordination is beneficial for individuals with complex health conditions such as cystic fibrosis and sickle cell anemia, however, the extent to which care coordination is effective for assisting individuals with spina bifida is unknown. Spina bifida is one of the most common birth defects, affecting approximately 3 per 10,000 live births in the United States annually. The proposed activity is part of the National Spina Bifida Program mandated in Section 317C of the Public Health Service Act (42 U.S.C. 247b–4).

Researchers will visit 10 spina bifida clinics nationwide. At each clinic, one focus group will be conducted with approximately eight caregivers of children with spina bifida. Each focus group will last about two hours. In addition, interviews will be conducted with approximately five staff members at each clinic; each interview will take approximately 45 minutes. Focus group and interview respondents will be asked a variety of questions related to care coordination for individuals with spina bifida including how care is coordinated in the clinic, barriers and facilitators to the provision of care coordination, the effectiveness of care coordination, and recommendations for improving care coordination.

There will be no costs to the respondents other than their time. The total estimated annualized burden hours are 244.

Estimated Annualized Burden Hours:

Type of respondents	Form name	Number of respondents	Number of reponses per respondent	Average burden per response (in hours)
Caregivers for Spina Bifida Patients	Focus Group Response Form	100	1	5/60
	Focus Group Telephone Script	100	1	15/60
	Focus Group Moderator's Guide	80	1	2
Spina Bifida Clinic Staff	Clinic Recruitment Script	14	1	15/60
	Clinic Staff Telephone Interview Script	55	1	10/60

Type of respondents	Form name	Number of respondents	Number of reponses per respondent	Average burden per response (in hours)
	Clinic Staff Interview Guide	50	1	45/60

Dated: June 14, 2007.

Catina Conner,

Acting Assistant Reports Clearance Officer,Centers for Disease Control and Prevention.

[FR Doc. E7–11934 Filed 6–19–07; 8:45 am]

BILLING CODE 4163–18–P

DEPARTMENT OF HEALTH AND HUMAN SERVICES

Centers for Disease Control and Prevention

[30Day–07–05AT]

Proposed Data Collections Submitted for Public Comment and Recommendations

The Centers for Disease Control and Prevention (CDC) publishes a list of information collection requests under review by the Office of Management and Budget (OMB) in compliance with the Paperwork Reduction Act (44 U.S.C. Chapter 35). To request a copy of these requests, call the CDC Reports Clearance Officer at (404) 639–4604 or send an e-mail to *omb@cdc.gov.* Send written comments to CDC Desk Officer, Office of Management and Budget, Washington, DC or by fax to (202) 395–6974. Written comments should be received within 30 days of this notice.

Proposed Project

A Site Specific Modular Evaluation Instrument for Behavior Outcome Measurement—New—Agency for Toxic Substances and Disease Registry (ATSDR), Centers for Disease Control and Prevention (CDC).

Background and Brief Description

ATSDR considers evaluation to be a critical component for enhancing program effectiveness and improving resource management. ATSDR's mandate under the Comprehensive Environmental Response, Compensation, and Liability Act (CERLCA), as amended, is to help prevent or reduce further exposures at hazardous waste sites and the illnesses that result from such exposures. A standardized methodology to monitor outcomes associated with agency intervention will provide the data needed for demonstrating effectiveness and efficiency as well as identifying areas for improvement.

ATSDR, in cooperation with our cooperative agreement partners, is developing a series of survey modules designed to measure individual attitudes, knowledge and behaviors, as well as mental and physical health self-assessments, that may be influenced by health education and health promotion efforts conducted by the agency at hazardous waste sites. These modules will be used to determine knowledge improvements, attitude shifts, and behavior change following specific ATSDR program efforts and activities. The particular module or combination of modules(s) used at a site will vary depending on the contaminant(s) of concern and education/health promotion actions undertaken. In addition, the timing of the data collection will vary depending on whether this is a new site or one that has been underway for some time. In general, for new sites or existing sites with new intervention efforts, we would aim for two data collections, baseline and post-intervention. At existing sites where ATSDR interventions have been completed, we would collect data once, post-intervention.

Health education and promotion activities are conducted at approximately 250 sites annually. We estimate that 90% will have total exposed or potentially exposed populations of 10,000 or less, and we expect to survey up to 150 respondents at each site. At sites with exposed or potentially exposed populations of more than 10,000, we expect to survey up to 500 respondents at each site.

Using a standardized methodology and survey instrument to assess outcomes related to targeted intervention activities at hazardous waste sites will provide the agency with important feedback for program improvement. There will be no costs to respondents except for their time to participate in the survey. The total estimated annualized burden hours are 27,250.

Estimated Annualized Burden Hours:

Type of respondents	Number of sites	Number of respondents	Number of responses per respondent	Average burden per response (in hours)
General Public at Existing Sites with Exposed Populations of 10,000 or Less	55	150	1	20/60
General Public at Existing Sites with New Interventions or New Sites with Exposed Populations of 10,000 or Less	170	150	2	20/60
General Public at Existing Sites with Exposed Populations of 10,000 or More	5	500	1	20/60
General Public at Existing Sites with New Interventions or New Sites with Exposed Populations of 10,000 or More	20	500	2	20/60

Dated: June 14, 2007.

Catina Conner,

Acting Assistant Reports Clearance Officer,Centers for Disease Control and Prevention.

[FR Doc. E7–11936 Filed 6–19–07; 8:45 am]

BILLING CODE 4163–18–P

DEPARTMENT OF HEALTH AND HUMAN SERVICES

Health Resources and Services Administration

Privacy Act of 1974: New System of Records

AGENCY: Health Resources and Services Administration (HRSA), HHS.

ACTION: Notification of new system of records.

SUMMARY: In accordance with the requirements of the Privacy Act, the Health Resources and Services Administration (HRSA) is publishing notice of a proposal to add a new system of records titled, ''Information Center (IC) Integrated Clearinghouse System (IC/ICS),'' System No. 09–15–0067. The HRSA IC/ICS will facilitate the delivery of publications and requested information by members of the general public. The HRSA IC/ICS will also enable HRSA to deliver information efficiently through physical mailings or broadcast e-mail messages to HRSA Grantee organizations and other interested parties.

DATES: HRSA invites interested parties to submit comments on the proposed New System of Records on or before July 30, 2007. HRSA has sent a Report of New Systems of Records to Congress and to the Office of Management and Budget (OMB). The New System of Records will be effective 40 days from the date submitted to OMB unless HRSA receives comments which would result in a contrary determination.

ADDRESSES: Please address comments to Donn Taylor, Health Resources and Services Administration, Division of Management Services, 5600 Fishers Lane, Room 14A–20, Rockville, Maryland 20857; Telephone (301) 443–0204. Comments received will be available for inspection at this same address from 9 a.m. to 3 p.m., Monday through Friday. This is not a toll-free number.

FOR FURTHER INFORMATION CONTACT: Tina Cheatham, Acting Director, Office of Communications, Health Resources and Services Administration, 5600 Fishers Lane, Room 14–27, Rockville, Maryland 20857, Telephone: 301–443–3376. Please note this is not a toll free telephone number.

SUPPLEMENTARY INFORMATION: The Health Resources and Services Administration proposes to establish a new system of records: ''The HRSA Information Center (IC) Integrated Clearinghouse System (ICS),'' HHS/HRSA/Office of Communications. The HRSA Information Center provides easy access to a diversity of resources and a broad range of health information from over 70 Agency programs. The HRSA Information Center makes this information available to the public, health care professionals, policy makers and researchers to enhance their access to vital knowledge generated by HRSA supported public health programs.

Dated: May 31, 2007.

Elizabeth M. Duke,

Administrator.

[FR Doc. 07–3052 Filed 6–19–07; 8:45 am]

BILLING CODE 4165–15–M

DEPARTMENT OF HEALTH AND HUMAN SERVICES

Indian Health Service

Reimbursement Rates for Calendar Year 2007

AGENCY: Indian Health Service, HHS.

ACTION: Notice.

SUMMARY: Notice is given that the Director of Indian Health Service (IHS), under the authority of sections 321(a) and 322(b) of the Public Health Service Act (42 U.S.C. 248 and 249(b)), Public Law 83–568 (42 U.S.C. 2001(a)), and the Indian Health Care Improvement Act (25 U.S.C. 1601 *et seq.*), has approved the following rates for inpatient and outpatient medical care provided by IHS facilities for Calendar Year 2007 for Medicare and Medicaid beneficiaries and beneficiaries of other Federal programs. The Medicare Part A inpatient rates are excluded from the table below as they are paid based on the prospective payment system. Since the inpatient rates set forth below do not include all physician services and practitioner services, additional payment may be available to the extent that those services meet applicable requirements. Public Law 106–554, section 432, dated December 21, 2000, authorized IHS facilities to file Medicare Part B claims with the carrier for payment for physician and certain other practitioner services provided on or after July 1, 2001.

Inpatient Hospital Per Diem Rate (Excludes Physician/Practitioner Services)

Calendar Year 2007

Lower 48 States: $1,725.
Alaska: $2,208.

Outpatient Per Visit Rate (Excluding Medicare)

Calendar Year 2007

Lower 48 States: $256.
Alaska: $398.

Outpatient Per Visit Rate (Medicare)

Calendar Year 2007

Lower 48 States: $201.
Alaska: $356.

Medicare Part B Inpatient Ancillary Per Diem Rate

Calendar Year 2007

Lower 48 States: $353.
Alaska: $613.

Outpatient Surgery Rate (Medicare)

Established Medicare rates for freestanding Ambulatory Surgery Centers

Effective Date for Calendar Year 2007 Rates

Consistent with previous annual rate revisions, the Calendar Year 2007 rates will be effective for services provided on/or after January 1, 2007 to the extent consistent with payment authorities including the applicable Medicaid State plan.

Dated: January 4, 2007.

Charles W. Grim,

Assistant Surgeon General, Director, Indian Health Service.

[FR Doc. 07–3037 Filed 6–19–07; 8:45 am]

BILLING CODE 4165–16–M

DEPARTMENT OF HEALTH AND HUMAN SERVICES

National Institutes of Health

Government-Owned Inventions; Availability for Licensing

AGENCY: National Institutes of Health, Public Health Service, HHS.

ACTION: Notice.

SUMMARY: The inventions listed below are owned by an agency of the U.S. Government and are available for licensing in the U.S. in accordance with 35 U.S.C. 207 to achieve expeditious commercialization of results of federally-funded research and development. Foreign patent applications are filed on selected

inventions to extend market coverage for companies and may also be available for licensing.

ADDRESSES: Licensing information and copies of the U.S. patent applications listed below may be obtained by writing to the indicated licensing contact at the Office of Technology Transfer, National Institutes of Health, 6011 Executive Boulevard, Suite 325, Rockville, Maryland 20852–3804; telephone: 301/496–7057; fax: 301/402–0220. A signed Confidential Disclosure Agreement will be required to receive copies of the patent applications.

Synthetic Macrolides Inhibit Breast Cancer Migration

Description of Technology: This technology relates to the synthesis of several novel macrocylic compounds (macrolides), built upon a quinic acid-containing scaffold, which are potent inhibitors of tumor cell migration. Specifically, the new molecules have been shown to inhibit breast cancer cell migration *in vitro.*

Tumor metastasis or cell migration is a multi-step process in which primary tumor cells spread or migrate by invading adjacent tissues and/or metastasizing to distance sites. Thus, one approach to cancer treatment may be the inhibition of tumor migration. The initial observation that migrastatin, a macrolide natural product first isolated from a Streptomycete, inhibits tumor cell migration gave rise to the synthesis of the analogs with increased potency and tumor cell selectivity reported here.

Applications: These compounds may be the basis for new antimetastatic and antiangiogenic drugs. Some of the novel macrolides that have been designed and synthesized, inhibit tumor cell migration with low nanomolar to sub-micromolar IC_{50} values via a mechanism that appears to be similar to that of migrastatin and its analogs. The synthetic protocol used is straight forward and relatively high yielding, and has the potential to be further simplified.

The new compounds and methods may be used to treat a pathologic condition that may be ameliorated by inhibiting or decreasing cell migration or metastasis, to decrease anchorage-dependent growth of tumor cells, or to treat any pathologic condition characterized by neovascularization.

Advantages: The new molecules have been shown to inhibit breast cancer cell migration in vitro. Breast cancer is the most common female cancer in the United States, the second most common cause of death in women and the main cause of death in women ages 45 to 55. Despite early diagnosis and treatment, recurrence of the cancer including distant tumor growth or metastases is common. Accordingly, there is a need for compounds, such as those described in this invention, that inhibit cell migration and angiogenesis.

Development Status: Synthesis of several analogs has been carried out; Migration of breast cancer cells has been demonstrated to be inhibited *in vitro* at sub-micromolar IC_{50} values; The lead compound has been demonstrated not to be cytotoxic at levels up to 100 micromolar; Scaled up synthesis of the most potent macrolide is presently being scaled up to unable for future testing in a mouse model of breast cancer.

Inventors: Dr. Carole Bewley (NIDDK), Dr. Belhu B. Metaferia (NIDDK).

Publication: BB Metaferia, L Chen, HL Baker, XY Huang, CA Bewley. Synthetic macrolides that inhibit breast cancer cell migration in vitro. J Am Chem Soc. 2007 Mar 7;129(9):2434–2435. Epub 2007 Feb 13, doi 10.1021/ja068538d.

Patent Status: U.S. Provisional Application No. 60/900,151 filed 07 Feb 2007 (HHS Reference No. E–098–2007/0–US–01).

Licensing Status: Available for exclusive or non-exclusive licensing.

Licensing Contact: Michelle Booden, Ph.D.; 301/451–7337; *boodenm@mail.nih.gov.*

Collaborative Research Opportunity: The National Institute of Diabetes and Digestive and Kidney Diseases, Laboratory of Bioorganic Chemistry, is seeking parties interested in collaborative research to develop larger scale syntheses of the most potent macrolides and/or analogs thereof, and the conduct toxicology and other efficacy studies related to these macrolides. Please contact Dr. Carole Bewley at *caroleb@mail.nih.gov* or Rochelle S. Blaustein at *Rochelle.Blaustein@nih.gov* for more information.

Immunotoxin With In-Vivo T Cell Suppressant Activity

Description of Invention: The invention concerns immunotoxins and methods of using the immunotoxins for the treatment of autoimmune diseases and T cell malignancies. The immunotoxins are targeted via an antibody that is specific to T cells. This allows the specific ablation of malignant T cells and resting T cells. The transient ablation of resting T cells can ''reset'' the immune system by accentuating tolerizing responses. The toxin portion of the immunotoxin is genetically engineered to maintain bioactivity when recombinantly produced in *Pichia pastoris.* Data are available in transgenic animals expressing human CD3ε which supports the effects of the immunotoxin against T cells.

Applications: Treatment of autoimmune diseases such as multiple sclerosis, lupus, type I diabetes, aplastic anemia; Treatment of T cell leukemias and lymphomas such as cutaneous T cell leukemia/lymphoma (CTCL).

Advantages: Specificity of the immunotoxin avoids the killing of non-T cells, reducing side-effects associated with other mechanisms of treatment (*e.g.*, radiation and cyclophosphamide) such as infection and induced malignancy; A GMP production process has already been successfully implemented, and patient doses are available; All testing required for an FDA issued IND has been completed, allowing faster evaluation of the efficacy of the invention.

Benefits: New methods and compositions with limited side-effects have the potential to revolutionize treatment of autoimmune disease; provides an opportunity to capture a significant market share for the millions of people who suffer from an autoimmune disease.

Inventors: David Neville *et al.* (NIMH).

Patent Status: U.S. Patent No. 5,167,956 issued 01 Dec 1992 (HHS Reference No. E–012–1991/0–US–01); U.S. Patent No. 5,725,857 issued 10 Mar 1998 (HHS Reference No. E–012–1991/2–US–01); U.S. Patent No. 6,632,928 issued 14 Oct 2003 (HHS Reference No. E–044–1997/0–US–07); U.S. Patent Application No. 10/435,567 filed 09 May 2003, which published as 2003/0185825 on 02 Oct 2003 (HHS Reference No. E–044–1997/0–US–08); U.S. Patent Application No. 10/296,085 filed 18 Nov 2002, which published as 2004/0127682 on 01 Jul 2004 (HHS Reference No. E–044–1997/1–US–06); Foreign rights are also available

Licensing Status: Available for exclusive or non-exclusive licensing.

Licensing Contact: David A. Lambertson, Ph.D.; 301/435–4632; *lambertsond@mail.nih.gov.*

Collaborative Research Opportunity: The National Institute of Mental Health, Laboratory of Molecular Biology, is seeking statements of capability or interest from parties interested in collaborative research to further develop, evaluate, or commercialize methods of using the immunotoxins for the treatment of autoimmune diseases and T cell malignancies. Please contact David Neville at *davidn@mail.nih.gov* for more information.

Dated: June 13, 2007.

Steven M. Ferguson,

Director, Division of Technology Development and Transfer,Office of Technology Transfer,National Institutes of Health.

[FR Doc. E7–11824 Filed 6–19–07; 8:45 am]

BILLING CODE 4140–01–P

DEPARTMENT OF HEALTH AND HUMAN SERVICES

National Institutes of Health

Government-Owned Inventions; Availability for Licensing

AGENCY: National Institutes of Health, Public Health Service, HHS.

ACTION: Notice.

SUMMARY: The inventions listed below are owned by an agency of the U.S. Government and are available for licensing in the U.S. in accordance with 35 U.S.C. 207 to achieve expeditious commercialization of results of federally-funded research and development. Foreign patent applications are filed on selected inventions to extend market coverage for companies and may also be available for licensing.

ADDRESSES: Licensing information and copies of the U.S. patent applications listed below may be obtained by writing to the indicated licensing contact at the Office of Technology Transfer, National Institutes of Health, 6011 Executive Boulevard, Suite 325, Rockville, Maryland 20852–3804; telephone: 301/496–7057; fax: 301/402–0220. A signed Confidential Disclosure Agreement will be required to receive copies of the patent applications.

NUP98–HOXD13 Transgenic Mice

Description of Technology: Myelodysplastic syndrome (MDS) is collection of closely related blood diseases that arise in the bone marrow characterized by anemia, neutropenia, and thrombocytopenia resulting from hematopoietic stem cell disorders. A variety of genetic aberrations have been associated with MDS, including chromosomal translocations of the NUP98 gene. The only current curative therapy for MDS is allogeneic bone marrow transplant. Without bone marrow transplant, patients either die of progressive pancytopenia or following transformation of MDS to acute myeloid leukemia. Progress in understanding and treating MDS has been hampered by a lack of an animal model that accurately recapitulates all of the features of human MDS. Utilizing a NUP98-HOXD13 (hereafter NHD13) fusion gene, a mouse model was developed to elucidate the biology of MDS. Genetically engineered mice that express an NHD13 transgene display all of the phenotypic features of MDS including peripheral blood cytopenia, bone marrow dysplasia, and transformation to acute leukemia. These mice provide an accurate preclinical model for MDS.

Applications: Model to study MDS and evaluate MDS therapy.

Market: 15,000–20,000 new cases of MDS are diagnosed in the U.S.; 80–90% of patients are older than 60 years old.

Development Status: The technology is currently in the pre-clinical stage of development.

Inventors: Peter D. Aplan *et al.* (NCI).

Publications:

1. YW Lin *et al.* Notch1 mutations are important for leukemic transformation in murine models of precursor-T leukemia/lymphoma. Blood. 2006 Mar 15;107(6):2540–2543.

2. YW Lin *et al.*, NUP98-HOXD13 transgenic mice develop a highly penetrant, severe myelodysplastic syndrome that progresses to acute leukemia. Blood. 2005 Jul 1;106(1):287–295.

Patent Status: HHS Reference No. E–071–2007/0—Research Tool.

Licensing Status: Available for non-exclusive licensing.

Licensing Contact: Jennifer Wong; 301/435–4633; *wongje@mail.nih.gov.*

Collaborative Research Opportunity: The Leukemia Biology Section, Genetics Branch, National Cancer Institute is seeking statements of capability or interest from parties interested in collaborative research to further develop, evaluate, or commercialize the NHD13 mouse model. Please contact John D. Hewes, Ph.D. at 301–435–3121 or *hewesj@mail.nih.gov* for more information.

Identification of Ovarian Cancer Tumor Markers and Therapeutic Agents

Description of Technology: Germline mutations of BRCA1 and BRCA2 tumor suppressor genes are responsible for 5%–10% of all epithelial ovarian cancers. However, little is known about the molecular mechanisms involved in BRCA1 and/or BRCA2 mutation-associated (termed BRCA-linked) ovarian carcinogenesis. To elucidate their pathways, microarrays were used to compare gene expression patterns in ovarian cancers associated with BRCA1 or BRCA2 mutations with gene expression patterns in sporadic epithelial ovarian cancers to identify patterns common to both hereditary and sporadic tumors. As a result of this analysis, genes that are upregulated in ovarian cancer were identified. Approximately two-thirds of the sequences identified were previously known genes, while approximately one-third were expressed sequence tags, representing sequences that are cloned and identified but not yet characterized. Eighty-three genes were over-expressed in 50% of all tumors and these over-expressed sequences may be used as markers for ovarian cancer and/or targets for therapy.

Applications: Method to diagnose ovarian cancer; Method to treat ovarian cancer with therapeutics that target ovarian biomarkers; Ovarian cancer therapeutics that inhibit ovarian cancer markers such as siRNA.

Market: Estimated 180,000 new cases of breast cancer in the U.S. in 2007; Estimated 41,000 deaths due to breast cancer in the U.S. in 2007.

Development Status: The technology is currently in the pre-clinical stage of development.

Inventors: Amir Jazaeri (NCI), Edison T. Liu (NCI), *et al.*

Publications:

1. AA Jazaeri *et al.* BRCA1-mediated repression of select X chromosome genes. J Transl Med. 2004 Sep 21;2(1):32.

2. AA Jazaeri *et al.* Molecular determinants of tumor differentiation in papillary serous ovarian carcinoma. Mol Carcinog. 2003 Feb;36(2):53–59.

3. AA Jazaeri *et al.* Gene expression profiles of BRCA1-linked, BRCA2-linked, and sporadic ovarian cancers. J Natl Cancer Inst. 2002 Jul 3;94(13):990–1000.

Patent Status: U.S. Provisional Application No. 60/357,031 filed 13 Feb 2002 (HHS Reference No. E–310–2001/0–US–01); PCT Patent Application No. PCT/US2003/046888 filed 13 Feb 2003 (HHS Reference No. E–310–2001/0–PCT–02); U.S. Patent Application No. 10/505,680 filed 12 Aug 2004 (HHS Reference No. E–310–2001/0–US–03).

Licensing Status: Available for exclusive or non-exclusive licensing.

Licensing Contact: Jennifer Wong; 301/435–4633; *wongje@mail.nih.gov.*

Tumor Markers in Ovarian Cancer

Description of Technology: Ovarian cancer is one of the most common forms of neoplasia in women. Although advanced ovarian cancer has only a 20–30% survival rate, an estimated 90% of cases are effectively treated when detected early. However, few symptoms are associated with early ovarian cancer, and approximately 25% of ovarian cancer cases are diagnosed before it metastasizes. Utilizing SAGE analysis, a unique set of ovarian cancer biomarkers has been identified that are highly expressed in ovarian epithelial tumor

cells in comparison to normal ovarian epithelial cells. A better knowledge of the mechanisms underlying ovarian tumorigenesis will likely result in the development of novel approaches for the diagnosis and therapy of this deadly disease.

Applications: Method to diagnose ovarian cancer; Methods to treat patients with compositions that inhibit ovarian biomarkers such as siRNA.

Market: Ovarian cancer is the fourth most common form of cancer in the U.S.; Ovarian cancer is three times more lethal than breast cancer; 22,430 new cases of ovarian cancer expected in 2007; 15,280 ovarian cancer deaths in the U.S. in 2007.

Development Status: The technology is currently in the pre-clinical stage of development.

Inventors: Patrice J. Morin *et al.* (NIA).

Related Publications:

1. KJ Hewitt, R Agarwal, PJ Morin. The claudin gene family: expression in normal and neoplastic tissues. BMC Cancer. 2006 Jul 12;6:186.

2. PJ Morin. Claudin proteins in human cancer: promising new targets for diagnosis and therapy. Cancer Res. 2005 Nov 1;65(21):9603–9606.

3. R Agarwal, T D'Souza, PJ Morin. Claudin–3 and claudin–4 expression in ovarian epithelial cells enhances invasion and is associated with increased matrix metalloproteinase–2 activity. Cancer Res. 2005 Aug 15;65(16):7378–7385.

4. CD Hough, CA Sherman-Baust, ES Pizer, PJ Morin. Use of SAGE to study gene expression in ovarian cancer. American Association for Cancer Research, 9th Annual Meeting, April 10–14, 1999, Philadelphia, Pennsylvania.

Patent Status: U.S. Provisional Application No. 60/194,336 filed 03 Apr 2000 (HHS Reference No. E–138–2000/0–US–01); PCT Patent Application No. PCT/US2001/10947 filed 03 Apr 2001, which published as WO 01/75177 on 11 Oct 2001 (HHS Reference No. E–138–2000/0–PCT–02); U.S. Patent Application No. 10/257,021 filed 03 Oct 2002 (HHS Reference No. E–138–2000/0–US–03)

Licensing Status: Available for exclusive or non-exclusive licensing.

Licensing Contact: Jennifer Wong; 301/435–4633; *wongje@mail.nih.gov.*

Dated: June 8, 2007.

Steven M. Ferguson,

Director, Division of Technology Development and Transfer,Office of Technology Transfer,National Institutes of Health.

[FR Doc. E7–11825 Filed 6–19–07; 8:45 am]

BILLING CODE 4140–01–P

DEPARTMENT OF HEALTH AND HUMAN SERVICES

National Institutes of Health

Government-Owned Inventions; Availability for Licensing

AGENCY: National Institutes of Health, Public Health Service, HHS.

ACTION: Notice.

SUMMARY: The inventions listed below are owned by an agency of the U.S. Government and are available for licensing in the U.S. in accordance with 35 U.S.C. 207 to achieve expeditious commercialization of results of federally-funded research and development. Foreign patent applications are filed on selected inventions to extend market coverage for companies and may also be available for licensing.

ADDRESSES: Licensing information and copies of the U.S. patent applications listed below may be obtained by writing to the indicated licensing contact at the Office of Technology Transfer, National Institutes of Health, 6011 Executive Boulevard, Suite 325, Rockville, Maryland 20852–3804; telephone: 301/496–7057; fax: 301/402–0220. A signed Confidential Disclosure Agreement will be required to receive copies of the patent applications.

Construction of Recombinant Baculoviruses Carrying the Gene Encoding the Major Capsid Protein, VP1, From Calicivirus Strains (Including Norovirus Strains Toronto, Hawaii, Desert Shield, Snow Mountain, and MD145–12)

Description of Technology: The noroviruses (known as ''Norwalk-like viruses'') are associated with an estimated 23,000,000 cases of acute gastroenteritis in the United States each year. Norovirus illness often occurs in outbreaks, affecting large numbers of individuals, illustrated recently by well-publicized reports of gastroenteritis outbreaks on several recreational cruise ships and in settings such as hospitals and schools. Norovirus disease is clearly important in terms of medical costs and missed workdays, and accumulating data support its emerging recognition as important agents of diarrhea-related morbidity.

Because the noroviruses cannot be propagated by any means in the laboratory, an important strategy in their study is the development of molecular biology-based tools. This invention reports the development of recombinant baculoviruses carrying the capsid gene from several caliciviruses associated with human disease. Growth of these baculovirus recombinants in insect cells results in the expression of virus-like particles (VLPs) that are antigenically indistinguishable from the native calicivirus particle. These VLPs can be purified in large quantities for use as diagnostic reagents and potential vaccine candidates.

Inventors: Kim Y. Green, Judy F. Lew, Adriene D. King, Stanislav V. Sosnovtsev, Gael M. Belliot (NIAID).

Publication: An example of the application of these materials is further described in KY Green *et al.*, ''A predominant role for Norwalk-like viruses as agents of epidemic gastroenteritis in Maryland nursing homes for the elderly,'' J. Infect. Dis. 2002 Jan. 15;185(2):133–146.

Patent Status: HHS Reference No. E–198–2003/0—Research Material.

Licensing Status: The materials embodied in this invention are available nonexclusively through a biological materials license.

Licensing Contact: Peter A. Soukas, J.D.; 301/435–4646; *soukasp@mail.nih.gov*

Collaborative Research Opportunity: The Laboratory of Infectious Diseases, NIAID, NIH, is seeking statements of capability or interest from parties interested in collaborative research to further develop, evaluate, or commercialize norovirus VLP antigens. Please contact Kim Y. Green at *kgreen@niaid.nih.gov* for more information.

Full-Length cDNA Clone Representing the Consensus Sequence of the RNA Genome of a Human Norovirus (strain MD145–12) That Encodes Biologically Active Proteins

Description of Technology: The invention provides for a full-length cloned cDNA copy of the RNA genome of a predominant norovirus strain (Genogroup II.4) designated MD145–12 that was associated with human gastrointestinal illness. The noroviruses, which were formerly known as ''Norwalk-like'' viruses are estimated to cause 23 million cases of acute gastroenteritis in the USA each year. The virus has been designated into category B of the CDC biodefense-related priority pathogens because it can be used as an agent of bioterrorism. The subject cDNA clone of the virus encodes proteins of the MD145–12 strain that, when expressed in vitro, exhibit properties that would be expected from those produced by the original infectious virus. This cDNA clone is presently the only source to obtain norovirus proteins to facilitate studies

aimed at developing control strategies such as vaccines and therapeutic drugs.

Inventors: Gael M. Belliot, Kim Y. Green, Stanislav V. Sosnovtsev (NIAID)

Patent Status: HHS Reference No. E–212–2003/0—Research Material

Licensing Status: The cDNA clone for norovirus strain MD145–12 is available for licensing via a biological material license (BML).

Licensing Contact: Peter A. Soukas, J.D.; 301/435–4646; *soukasp@mail.nih.gov.*

Collaborative Research Opportunity: The Laboratory of Infectious Diseases, NIAID, NIH, is seeking statements of capability or interest from parties interested in collaborative research to further develop, evaluate, or commercialize reagents derived from a cDNA clone of the genome of a predominant human norovirus strain, Genogroup II.4. Please contact Kim Y. Green at *kgreen@niaid.nih.gov* for more information.

Construction of an Infectious Full-Length cDNA Clone of the Porcine Enteric Calicivirus RNA Genome

Description of Technology: Porcine enteric calicivirus (PEC) is a member of the genus Sapovirus in the family Caliciviridae. This virus causes diarrheal illness in pigs. In addition, PEC serves as an important model for the study of enteric caliciviruses that cause diarrhea and that cannot be grown in cell culture (including the noroviruses represented by Norwalk virus and the sapoviruses represented by Sapporo virus). The development of an infectious cDNA clone is important because it enables the use of ''reverse genetics'' to engineer mutations of interest into the genome of PEC and to study their effects. In addition, it allows the introduction of foreign coding sequences into the genome of PEC that could be useful for vaccine development in swine and possibly humans. This discovery has both basic research applications such as mapping mutations involved in tissue culture adaptation, tissue tropism, and virulence as well as practical applications such as providing a genetic backbone for the development of chimeric vaccine viruses.

Inventors: Kyeong-Ok Chang (NIAID), Stanislav V. Sosnovtsev (NIAID), Gael M. Belliot (NIAID), Kim Y. Green (NIAID), *et al.*

Publication: The materials are further described in KO Chang *et al.*, ''Cell-culture propagation of porcine enteric calicivirus mediated by intestinal contents is dependent on the cyclic AMP signaling pathway,'' Virology. 2002 Dec 20;304(2):302–310.

Patent Status: HHS Reference No. E–214–2003/0—Research Material.

Licensing Status: The materials embodied in this invention are available nonexclusively through a biological materials license.

Licensing Contact: Peter A. Soukas, J.D.; 301/435–4646; *soukasp@mail.nih.gov*

Collaborative Research Opportunity: The Laboratory of Infectious Diseases, NIAID, NIH, is seeking statements of capability or interest from parties interested in collaborative research to further develop, evaluate, or commercialize reagents derived from an infectious cDNA copy of the genome of porcine enteric calicivirus. Please contact Kim Y. Green at *kgreen@niaid.nih.gov* for more information.

Enzymatically-Active RNA-Dependent RNA Polymerase From a Human Norovirus (Calicivirus)

Description of Technology: The noroviruses (formerly known as ''Norwalk-like viruses'') are associated with gastroenteritis outbreaks, affecting large numbers of individuals each year. Emerging data are supporting their increasing recognition as important agents of diarrhea-related morbidity and mortality. The frequency with which noroviruses are associated with gastroenteritis as ''food and water-borne pathogens'' has led to the inclusion of caliciviruses as Category B Bioterrorism Agents/Diseases. Because the noroviruses cannot be propagated by any means in the laboratory, an important strategy in their study is the development of molecular biology-based tools and replication systems. This invention reports the isolation of the first recombinant, enzymatically-active proteinase and RNA dependent RNA polymerase (RdRp) complex for a human norovirus. This enzyme should facilitate studies aimed at developing therapeutic drugs for norovirus disease.

Inventors: Gael M. Belliot, Stanislav V. Sosnovtsev, Kyeong-Ok Chang, Kim Y. Green (NIAID).

Publication: The materials are further described in L Wei *et al.*, ''Proteinase-polymerase precursor as the active form of feline calicivirus RNA-dependent RNA polymerase,'' J. Virol. 2001 Feb;75(3):1211–1219.

Patent Status: HHS Reference No. E–283–2003/0—Research Material.

Licensing Status: The materials embodied in this invention are available nonexclusively through a biological materials license.

Licensing Contact: Peter A. Soukas, J.D.; 301/435–4646; *soukasp@mail.nih.gov.*

Collaborative Research Opportunity: The Laboratory of Infectious Diseases, NIAID, NIH, is seeking statements of capability or interest from parties interested in collaborative research to further develop, evaluate, or commercialize an active human norovirus proteinase-polymerase enzyme. Please contact Kim Y. Green at *kgreen@niaid.nih.gov* for more information.

Dated: June 8, 2007.

Steven M. Ferguson,

Director,Division of Technology Development and Transfer,Office of Technology Transfer,National Institutes of Health.

[FR Doc. E7–11826 Filed 6–19–07; 8:45 am]

BILLING CODE 4140–01–P

DEPARTMENT OF HEALTH AND HUMAN SERVICES

National Institutes of Health

Government-Owned Inventions; Availability for Licensing

AGENCY: National Institutes of Health, Public Health Service, HHS.

ACTION: Notice.

SUMMARY: The inventions listed below are owned by an agency of the U.S. Government and are available for licensing in the U.S. in accordance with 35 U.S.C. 207 to achieve expeditious commercialization of results of federally-funded research and development. Foreign patent applications are filed on selected inventions to extend market coverage for companies and may also be available for licensing.

ADDRESSES: Licensing information and copies of the U.S. patent applications listed below may be obtained by writing to the indicated licensing contact at the Office of Technology Transfer, National Institutes of Health, 6011 Executive Boulevard, Suite 325, Rockville, Maryland 20852–3804; telephone: 301/496–7057; fax: 301/402–0220. A signed Confidential Disclosure Agreement will be required to receive copies of the patent applications.

Methods for Prevention and Treatment of Polyomavirus Infection or Reactivation

Description of Technology: Available for licensing and commercial development are methods of using two MAP kinase kinase (MEK) inhibitors, PD98059 and U0126, in the prevention and treatment of polyomavirus infection. Decrease in viral protein expression upon treatment with the MEK inhibitors has been demonstrated

for two polyomavirus species, JC virus (JCV) and BK virus (BKV). It is believed that these MEK inhibitors may also be effective against other polyomavirus species in which TGF-β expression is elevated.

JCV is responsible for the demyelination of the central nervous system which is observed in cases of progressive multifocal leukoencephalopathy (PML). PML is most frequently seen in patients with HIV/AIDS, but is also a contributing factor in fatalities in patients with leukemia, lymphoma, and connective tissue diseases, in addition to individuals receiving immunosuppressive therapy for autoimmune disorders or prevention of transplant rejection.

BKV is associated with deadly clinical syndromes such as viruria and viremia, utreteral ulceration and stenosis, and hemorrhagic cystitis. BKV also causes polyomavirus-associated nephrophathy in 1–10% of all renal transplant recipients.

Currently, no effective antiviral agents are available to treat these opportunistic infections. In all observed cases, activation of either JCV and BKV in immunosuppressed patients has resulted in fatality.

Applications: Treatment and prevention of polyomavirus infection in immunocompromised patients.

Development Status: In vitro data is currently available and inventors are actively developing the technology.

Inventors: Veersamy Ravichandran and Eugene Major (NINDS).

Publication: V Ravichandran, PN Jensen, EO Major. MEK1/2 inhibitors block basal and TGF-β_1 stimulated JC virus multiplication. J Virol. 2007 Apr 4; Epub ahead of print, doi:10.1128/JVI.02658–06.

Patent Status: U.S. Provisional Application No. 60/908,950 filed 29 Mar 2007 (HHS Reference No. E–101–2007/0–US–01).

Licensing Status: Available for licensing.

Licensing Contact: Cristina Thalhammer-Reyero, Ph.D., M.B.A.; 301/435–4507; *thalhamc@mail.nih.gov.*

Collaborative Research Opportunity: The National Institute of Neurological Disorders and Stroke is seeking statements of capability or interest from parties interested in collaborative research to further develop, evaluate, or commercialize treatment and prevention of polyomavirus infections in immunocompromised patients. Please contact Melissa Maderia, Ph.D. at *maderiam@mail.nih.gov* for more information.

Monoclonal Antibodies That Bind or Neutralize Hepatitis B Virus

Description of Technology: Hepatitis B virus (HBV) chronically infects over 300 million people worldwide. Many of them will die of chronic hepatitis or hepatocellular carcinoma. The present technology relates to the isolation and characterization of a novel neutralizing chimpanzee monoclonal antibody to HBV. The antibody was identified through a combinatorial antibody library constructed from bone marrow cells of a chimpanzee experimentally infected with HBV. The selected monoclonal antibody has been shown to react equally well with wild-type HBV and the most common neutralization escape mutant variants. Therefore, this monoclonal antibody with high affinity and broad reactivity may have distinct advantages over other approaches to immunoprophylaxis and immunotherapy of chronic HBV infection, as most of the monoclonal antibodies currently in use are not sufficiently and broadly reactive to prevent the emergence of neutralization escape mutants of HBV. This technology describes such antibodies, fragments of such antibodies retaining hepatitis B virus-binding ability, fully human or humanized antibodies retaining hepatitis B virus-binding ability, and pharmaceutical compositions including such antibodies. This invention further describes isolated nucleic acids encoding the antibodies and host cells transformed with nucleic acids. In addition, this invention provides methods of employing these antibodies and nucleic acids in the in vitro and in vivo diagnosis, prevention and therapy of HBV diseases.

Inventors: Suzanne U. Emerson (NIAID), Robert H. Purcell (NIAID), *et al.*

Patent Status: U.S. Provisional Application No. 60/644,309 filed 14 Jan 2005 (HHS Reference No. E–144–2004/0–US–01); PCT Application No. PCT/US2006/001336 filed 13 Jan 2006, which published as WO 2006/076640 on 20 Jul 2006 (HHS Reference No. E–144–2004/0–PCT–02)

Licensing Contact: Chekesha S. Clingman, Ph.D.; 301/435–5018; *clingmac@mail.nih.gov.*

Endotracheal Tube Using Unique Leak Hole To Lower Dead Space

Description of Technology: Through injury or diseases, human or animal lungs may become too weak to sustain a sufficient flow of oxygen to the body and to remove adequate amounts of expired carbon dioxide. The present invention is a tracheal tube ventilation apparatus which efficiently rids patients of expired gases and promotes healthier breathing. This is accomplished by creating one or more leak holes in the wall of the endotracheal tube above the larynx, such as in the back of the mouth (i.e., oropharynx), so that expired gases can leak out of the endotracheal tube. The described apparatus is a two stage tube where the first stage has a smaller diameter such that it fits within the confined area of the lower trachea and the second stage has a larger diameter, which fits properly within the larger diameter of the patient's pharynx. The endotracheal tube is preferably wire reinforced and ultra-thin walled so as to reduce airway resistance. The invention substantially reduces endotracheal dead space and is expected to benefit those patients with both early and late stage acute respiratory failure, and reduce or obviate the need for mechanical pulmonary ventilation in many patients.

Applications: Tracheal tube ventilation; Efficiently rid patient of expired gases and thereby promote healthier breathing.

Development Status: System is well developed and operational.

Inventor: Theodor Kolobow (NHLBI).

Patent Status: U.S. Patent No. 7,107,991 issued 19 Sep 2006 (HHS Reference No. E–269–2001/0–US–01); PCT Application No. PCT/US02/29319 filed 16 Sep 2002 (HHS Reference No. E–269–2001/0–PCT–02); Canadian National Stage Filing, Application No. 2463538, filed 16 Sep 2002 (HHS Reference No. E–269–2001/0–CA–03); European National Stage Filing, Application No. 02773398.9, filed 28 Mar 2004 (HHS Reference No. E–269–2001/0–EP–04).

Licensing Status: Available for non-exclusive or exclusive licensing.

Licensing Contact: Michael A. Shmilovich, Esq.; 301/435–5019; *shmilovm@mail.nih.gov.*

Collaborative Research Opportunity: The NHLBI/Pulmonary Critical Care Medicine Branch (PCCMB) is seeking statements of capability or interest from parties interested in collaborative research to further develop, evaluate, or commercialize innovative endotracheal tube technology. Please contact Marianne Lynch at 301–594–4094 or *lynchm@nhlbi.nih.gov* for more information.

Increased Protein Expression Vector for Vaccine Applications

Description of Technology: An expression vector with a unique promoter that results in higher level of protein expression than vectors currently in use is available for licensing from the NIH. The elevated

levels of expression are achieved through use of a specific promoter, known as CMV/R, in which the Human T-Lymphotrophic Virus (HTLV–1) Long Terminal Repeat (LTR) R–U5 region is substituted for a portion of the intron downstream of the CMV immediate early region 1 enhancer (Barouch *et al.*, 2005). Sequences of 95% or better homology to CMV/R can be used as well. CMV/R vectors are currently being used in a number of clinical trials, including vaccines against West Nile Virus, Ebola virus, and HIV and achieving promising results. The related HIV vaccine technology is available for licensing, as is the Ebola DNA vaccine technology (non-exclusive licensing only). The CMV/R vector can be used for any DNA vaccine or for the production of recombinant proteins in high yields.

Applications: Vector for DNA vaccines; High yield expression of recombinant proteins.

Inventors: Gary Nabel and Zhi-yong Yang (NIAID).

Patent Status: U.S. Patent No. 7,094,598 issued 22 Aug 2006 [HHS Reference No. E–241–2001/1–US–01 (CMV/R)], applications pending in EP, JP, CA, and AU; U.S. Patent Application No. 10/491,121 filed 23 Aug 2004 [HHS Reference No. E–241–2001/0–US–07 (Ebola DNA vaccine)], applications pending in EP, JP, CA, and AU; U.S. Patent Application No. 11/632,522 filed 16 Jan 2007 [HHS Reference No. E–267–2004/1–US–08 (HIV DNA vaccine)].

Licensing Status: Available for non-exclusive licensing.

Licensing Contact: Susan Ano, Ph.D.; 301/435–5515; *anos@mail.nih.gov.*

Dated: June 11, 2007.

Steven M. Ferguson,

Director, Division of Technology Development and Transfer, Office of Technology Transfer, National Institutes of Health.

[FR Doc. E7–11830 Filed 6–19–07; 8:45 am]

BILLING CODE 4140–01–P

DEPARTMENT OF HEALTH AND HUMAN SERVICES

National Institutes of Health

Government-Owned Inventions; Availability for Licensing

AGENCY: National Institutes of Health, Public Health Service, HHS.

ACTION: Notice.

SUMMARY: The inventions listed below are owned by an agency of the U.S. Government and are available for licensing in the U.S. in accordance with 35 U.S.C. 207 to achieve expeditious commercialization of results of federally-funded research and development. Foreign patent applications are filed on selected inventions to extend market coverage for companies and may also be available for licensing.

ADDRESSES: Licensing information and copies of the U.S. patent applications listed below may be obtained by writing to the indicated licensing contact at the Office of Technology Transfer, National Institutes of Health, 6011 Executive Boulevard, Suite 325, Rockville, Maryland 20852–3804; telephone: 301/496–7057; fax: 301/402–0220. A signed Confidential Disclosure Agreement will be required to receive copies of the patent applications.

Vibrio Cholerae O139 Conjugate Vaccines

Description of Technology: Cholera remains an important public health problem. Epidemic cholera is caused by two Vibrio cholerae serotypes O1 and O139. The disease is spread through contaminated water. According to information reported to the World Health Organization in 1999, nearly 8,500 people died and another 223,000 were sickened with cholera worldwide. This invention is a polysaccharide-protein conjugate vaccine to prevent and treat infection by Vibrio cholerae O139 comprising the capsular polysaccharide (CPS) of V. cholerae O139 conjugated through a dicarboxylic acid dihydrazide linker to a mutant diphtheria toxin carrier. In addition to the conjugation methods, also claimed in the invention are methods of immunization against V. cholerae O139 using the conjugates of the invention. The inventors have shown that the conjugates of the invention elicited in mice high levels of serum antibodies to CPS, a surface antigen of Vibrio cholerae O139, that have vibriocidal activity. Clinical trials of the two most immunogenic conjugates have been planned by the inventors. The conjugate vaccine is aimed for long lasting immunity, especially in young children, and can be administered in concurrent with routine vaccines.

Inventors: Shousun Szu, Zuzana Kossaczka, John Robbins (NICHD).

Related Publication: Z Kossaczka *et al.* Vibrio cholerae O139 conjugate vaccines: synthesis and immunogenicity of V. cholerae O139 capsular polysaccharide conjugates with recombinant diphtheria toxin mutant in mice. Infect Immun. 2000 Sep;68(9):5037–5043.

Patent Status:

PCT Application No. PCT/US00/24119 filed 01 Sep 2000, which published as WO 02/20059 on 14 Mar 2002 (HHS Reference No. E–274–2000/0–PCT–01)

U.S. Patent Application No. 10/363,618 filed 01 Sep 2000 (HHS Reference No. E–274–2000/0–US–02)

U.S. Patent Application No. 11/695,735 filed 03 Apr 2007 (HHS Reference No. E–274–2000/0–US–03)

Licensing Status: Available for exclusive or non-exclusive licensing.

Licensing Contact: Peter A. Soukas, J.D.; 301/435–4646; *soukasp@mail.nih.gov*

Collaborative Research Opportunity: The NICHD/LDMI is seeking statements of capability or interest from parties interested in collaborative research to further develop, evaluate, or commercialize Vibrio cholera O139 or O1 conjugate vaccines. Please contact John D. Hewes, Ph.D. at 301–435–3121 or *hewesj@mail.nih.gov* for more information.

CC Chemokine Receptor 5 DNA, New Animal Models and Therapeutic Agents for HIV Infection

Description of Technology: Chemokine receptors are expressed by many cells, including lymphoid cells, and function to mediate cell trafficking and localization. CC chemokine receptor 5 (CCR5) is a seven-transmembrane, G protein-coupled receptor (GPCR) which regulates trafficking and effector functions of memory/effector T-lymphocytes, macrophages, and immature dendritic cells. Chemokine binding to CCR5 leads to cellular activation through pertussis toxin-sensitive heterotrimeric G proteins as well as G protein-independent signalling pathways. Like many other GPCRs, CCR5 is regulated by agonist-dependent processes which involve G protein coupled receptor kinase (GRK)-dependent phosphorylation, beta-arrestin-mediated desensitization and internalization.

Human CCR5 also functions as the main coreceptor for the fusion and entry of many strains of human immunodeficiency virus (HIV–1, HIV–2). HIV–1 transmission almost invariably involves such CCR5-specific variants (designated R5); individuals lacking functional CCR5 (by virtue of homozygosity for a defective CCR5 allele) are almost completely resistant to HIV–1 infection. Specific blocking of CCR5 (e.g. with chemokine ligands, anti-CCR5 antibodies, CCR5-blocking low MW inhibitors, etc.) inhibits entry/infection of target cells by R5 HIV strains. Cells expressing CCR5 and CD4 are useful for screening for agents that inhibit HIV by binding to CCR5. Such agents represent potential new

approaches to block HIV transmission and to treat infected people. A small animal expressing both human CCR5 along with human CD4 supports entry of HIV into target cells, a necessary hurdle that must be overcome for development of a small animal model (e.g. transgenic mouse, rat, rabbit, mink) to study HIV infection and its inhibition.

The invention embodies the CCR5 genetic sequence, cell lines and transgenic animals, the cells of which coexpress human CD4 and CCR5, and which may represent valuable tools for the study of HIV infection and for screening anti-HIV agents. The invention also embodies anti-CCR5 agents that block HIV env-mediated membrane fusion associated with HIV entry into human CD4-positive target cells or between HIV-infected cells and uninfected human CD4-positive target cells.

Inventors: Christophe Combadiere, Yu Feng, Ghalib Alkahatib, Edward A. Berger, Philip M. Murphy, Christopher C. Broder, Paul E. Kennedy (NIAID).

Publication: This technology was reported in Alkhatib *et al.*, ''CC CKR5: a RANTES, MIP–1alpha, MIP–1beta receptor as a fusion cofactor for macrophage-tropic HIV–1,'' Science 1996 Jun 28;272(5270):1955–1958.

Patent Status:

U.S. Provisional Application No. 60/018,508 filed 28 May 1996 (HHS Reference No. E–090–1996/0–US–01)

U.S. Patent Application No. 08/864,458 filed 28 May 1997 (HHS Reference No. E–090–1996/0–US–04)

U.S. Patent No. 7,151,087 issued 19 Dec 2006 (HHS Reference No. E–090–1996/0–US–06)

U.S. Patent Application No. 10/439,845 filed 15 May 2003 (HHS Reference No. E–090–1996/0–US–05)

U.S. Patent Application No. 10/846,185 filed 14 May 2004 (HHS Reference No. E–090–1996/0–US–07)

U.S. Patent Application No. 11/594,375 filed 07 Nov 2006 (HHS Reference No. E–090–1996/0–US–08)

PCT Application No. PCT/US97/09586 filed 28 May 1997 (HHS Reference No. E–090–1996/0–PCT–02)

European Patent Application No. 97929777.7 filed 28 May 1997 (HHS Reference No. E–090–1996/0–EP–03)

Licensing Status: The technology is available for exclusive or nonexclusive licensing.

Licensing Contact: Peter Soukas; 301/435–4646; *soukasp@mail.nih.gov.*

Collaborative Research Opportunity: The NIAID Laboratory of Molecular Immunology and Laboratory of Viral Diseases are seeking statements of capability or interest from parties interested in collaborative research to further develop, evaluate, or commercialize CCR5-related products. Please contact Philip Murphy (301–496–8616, *pmm@nih.gov*) or Edward Berger (301–402–2481, *edward_berger@nih.gov*) for more information.

Dated: June 11, 2007.

Steven M. Ferguson,

Director,Division of Technology Development and Transfer,Office of Technology Transfer,National Institutes of Health.

[FR Doc. E7–11854 Filed 6–19–07; 8:45 am]

BILLING CODE 4140–01–P

DEPARTMENT OF HEALTH AND HUMAN SERVICES

National Institutes on Health

National Institute on Drug Abuse; Notice of Closed Meetings

Pursuant to section 10(d) of the Federal Advisory Committee Act, as amended (5 U.S.C. Appendix 2), notice is hereby given of the following meetings.

The meetings will be closed to the public in accordance with the provisions set forth in sections 552b(c)(4) and 552b(c)(6), title 5 U.S.C., as amended. The grant applications and the discussions could disclose confidential trade secrets or commercial property such as patentable material, and personal information concerning individuals associated with the grant applications, the disclosure of which would constitute a clearly unwarranted invasion of personal privacy.

Name of Committee: National Institute on Drug Abuse Special Emphasis Panel, Special Review.

Date: June 28, 2007.

Time: 1:30 p.m. to 3:30 p.m.

Agenda: To review and evaluate grant applications.

Place: National Institutes of Health, 6101 Executive Boulevard, Rockville, MD 20852. (Telephone Conference Call).

Contact Person: Kesinee Nimit, MD, Health Scientist Administrator, Office of Extramural Affairs, National Institute on Drug Abuse, NIH, DHHS, Room 220, MSC 8401, 6101 Executive Boulevard, Bethesda, MD 20892–8401, (301) 435–1432.

This notice is being published less than 15 days prior to the meeting due to the timing limitations imposed by the review and funding cycle.

Name of Committee: National Institute on Drug Abuse Special Emphasis Panel, Pathway to Independence Award.

Date: July 11, 2007.

Time: 1 p.m. to 5 p.m.

Agenda: To review and evaluate grant applications.

Place: National Institutes of Health, 6101 Executive Boulevard, Rockville, MD 20852. (Telephone Conference Call).

Contact Person: Gerald L. McLaughin, PhD, Scientific Review Administrator, Office of Extramural Affairs, National Institute on Drug Abuse, NIH, DHHS, Room 220, MSC 8401, 6101 Executive Boulevard, Bethesda, MD 20892–8401, (301) 402–6626. *gm145a@nih.gov.*

Name of Committee: National Institute on Drug Abuse Special Emphasis Panel, NIDA–K Conflicts.

Date: July 17, 2007.

Time: 5 p.m. to 6 p.m.

Agenda: To review and evaluate grant applications.

Place: Doubletree Bethesda, 8120 Wisconsin Ave., Bethesda, MD 20814.

Contact Person: Mark Swieter, PhD, Chief, Training and Special Projects Review Branch, Office of Extramural Affairs, National Institute on Drug Abuse, NIH, DHHS, Suite 220, 6101 Executive Boulevard, Bethesda, MD 20892–8401, (301) 435–1389. *ms80x@nih.gov.*

(Catalogue of Federal Domestic Assistance Program Nos. 93.279, Drug Abuse and Addiction Research Programs, National Institutes of Health, HHS).

Dated: June 13, 2007.

Jennifer Spaeth,

Director, Office of Federal Advisory Committee Policy.

[FR Doc. 07–3012 Filed 6–19–07; 8:45 am]

BILLING CODE 4140—01–M

DEPARTMENT OF HEALTH AND HUMAN SERVICES

National Institutes of Health

National Institute of Allergy and Infectious Diseases; Notice of ClosedMeetings

Pursuant to section 10(d) of the Federal Advisory Committee Act, as amended (5 U.S.C. Appendix 2), notice is hereby given of the following meetings.

The meetings will be closed to the public in accordance with the provisions set forth in sections 552b(c)(4) and 552b(c)(6), title 5 U.S.C., as amended. The grant applications and the discussions could disclose confidential trade secrets or commercial property such as patentable material, and personal information concerning individuals associated with the grant applications, the disclosure of which would constitute a clearly unwarranted invasion of personal privacy.

Name of Committee: National Institute of Allergy and Infectious Diseases Special Emphasis Panel, T–Cell Immunology.

Date: July 10, 2007.

Time: 11 a.m. to 3 p.m.

Agenda: To review and evaluate grant applications.

Place: National Institutes of Health, Rockledge 6700, 6700B Rockledge Drive, Room #3122, Bethesda, MD 20817 (Telephone Conference Call).

Contact Person: Brenda Lange-Gustafson, PhD,Scientific Review Administrator,Scientific Review Program,Division of Extramural Activities,National Institutes of Health,6700B Rockledge Drive, MSC 7616,Bethesda, MD 20892,301–496–2550,*bgustafson@niaid.nih.gov.*

Name of Committee: Microbiology, Infectious Diseases and AIDS Initial Review Group, Acquired Immunodeficiency Syndrome Research Review Committee, AIDS Research Review Committee (July 2007).

Date: July 10, 2007.

Time: 12 p.m. to 5 p.m.

Agenda: To review and evaluate grant applications.

Place: National Institutes of Health, Rockledge 6700, 6700B Rockledge Drive, Bethesda, MD 20817 (Telephone Conference Call).

Contact Person: Erica L. Brown, PhD,Scientific Review Administrator,Scientific Review Program,Division of Extramural Activities,National Institutes of Health/NIAID,6700B Rockledge Drive, MSC 7616, Bethesda, MD 20892–7616,301–451–2639,*ebrown@niaid.nih.gov.*

(Catalogue of Federal Domestic Assistance Program Nos.93.855, Allergy, Immunology, and Transplantation Research;93.856, Microbiology and Infectious Diseases Research,National Institutes of Health, HHS)

Dated: June 12, 2007.

Jennifer Spaeth,

Director, Office of Federal Advisory Committee Policy.

[FR Doc. 07–3013 Filed 6–19–07; 8:45 am]

BILLING CODE 4140–01–M

DEPARTMENT OF HEALTH AND HUMAN SERVICES

National Institutes of Health

Center for Scientific Review; Notice of Closed Meetings

Pursuant to section 10(d) of the Federal Advisory Committee Act, as amended (5 U.S.C. Appendix 2), notice is hereby given of the following meetings.

The meetings will be closed to the public in accordance with the provisions set forth in sections 552b(c)(4) and 552b(c)(6), title 5 U.S.C., as amended. The grant applications and the discussions could disclose confidential trade secrets or commercial property such as patentable material, and personal information concerning individuals associated with the grant applications, the disclosure of which would constitute a clearly unwarranted invasion of personal privacy.

Name of Committee: Center for Scientific Review Special Emphasis Panel, Vision Research.

Date: June 26, 2007.

Time: 2 p.m. to 4 p.m.

Agenda: To review and evaluate grant applications.

Place: National Institutes of Health, 6701 Rockledge Drive, Bethesda, MD 20892 (Telephone Conference Call).

Contact Person: Jerry L. Taylor, PhD, Scientific Review Administrator, Center for Scientific Review, National Institutes of Health, 6701 Rockledge Drive, Room 5202, MSC 7846, Bethesda, MD 20892, (301) 435–1175, *taylorje@csr.nih.gov.*

This notice is being published less than 15 days prior to the meeting due to the timing limitations imposed by the review and funding cycle.

Name of Committee: Center for Scientific Review Special Emphasis Panel, Transporters, Receptors and Scaffolds.

Date: June 27, 2007.

Time: 3 p.m. to 5 p.m.

Agenda: To review and evaluate grant applications.

Place: National Institutes of Health, 6701 Rockledge Drive, Bethesda, MD 20892 (Telephone Conference Call).

Contact Person: Jonathan K. Ivins, PhD, Scientific Review Administrator, Center for Scientific Review, National Institutes of Health, 6701 Rockledge Drive, Room 4040A, MSC 7806, Bethesda, MD 20892, (301) 594–1245, *ivinsj@csr.nih.gov.*

This notice is being published less than 15 days prior to the meeting due to the timing limitations imposed by the review and funding cycle.

Name of Committee: Center for Scientific Review Special Emphasis Panel, KNOD/CASE Member SEP.

Date: June 29, 2007.

Time: 1 p.m. to 5 p.m.

Agenda: To review and evaluate grant applications.

Place: National Institutes of Health, 6701 Rockledge Drive, Bethesda, MD 20892 (Telephone Conference Call).

Contact Person: Steven H. Krosnick, MD, Scientific Review Administrator, Center for Scientific Review, National Institutes of Health, 6701 Rockledge Drive, Room 3158, MSC 7770, Bethesda, MD 20892, (301) 435–1712, *krosnics@csr.nih.gov.*

This notice is being published less than 15 days prior to the meeting due to the timing limitations imposed by the review and funding cycle.

Name of Committee: Center for Scientific Review Special Emphasis Panel, Fellowships: Technology Development.

Date: July 9–10, 2007.

Time: 7:30 a.m. to 6 p.m.

Agenda: To review and evaluate grant applications.

Place: National Institutes of Health, 6701 Rockledge Drive, Bethesda, MD 20892 (Virtual Meeting).

Contact Person: Marc Rigas, PhD, Scientific Review Administrator, Center for Scientific Review, National Institutes of Health, 6701 Rockledge Drive, Room 5158, MSC 7849, Bethesda, MD 20892, (301) 402–1074, *rigasm@csr.nih.gov.*

Name of Committee: Center for Scientific Review Special Emphasis Panel, Member Conflict: Brain Disorders and Clinical Neuroscience.

Date: July 11, 2007.

Time: 1 p.m. to 4 p.m.

Agenda: To review and evaluate grant applications.

Place: National Institutes of Health, 6701 Rockledge Drive, Bethesda, MD 20892 (Telephone Conference Call).

Contact Person: Alexander Yakovlev, PhD, Scientific Review Administrator, Center for Scientific Review, National Institutes of Health, 6701 Rockledge Drive, Room 5206, MSC 7846, Bethesda, MD 20892, (301) 435–1254, *yakovleva@csr.nih.gov.*

Name of Committee: Center for Scientific Review Special Emphasis Panel, Substance Abuse, Non-Injection Drug Use and HIV/AIDS.

Date: July 16–18, 2007.

Time: 8 a.m. to 8 p.m.

Agenda: To review and evaluate grant applications.

Place: National Institutes of Health, 6701 Rockledge Drive, Bethesda, MD 20892 (Virtual Meeting).

Contact Person: Jose H. Guerrier, PhD, Scientific Review Administrator, Center for Scientific Review, National Institutes of Health, 6701 Rockledge Drive, Room 5218, MSC 7852, Bethesda, MD 20892, (301) 435–1137, *guerriej@csr.nih.gov.*

Name of Committee: Center for Scientific Review Special Emphasis Panel, Member Conflicts for BMRD.

Date: July 16, 2007.

Time: 2 p.m. to 3 p.m.

Agenda: To review and evaluate grant applications.

Place: National Institutes of Health, 6701 Rockledge Drive, Bethesda, MD 20892 (Telephone Conference Call).

Contact Person: Karin F. Helmbers, PhD, Scientific Review Administrator, Center for Scientific Review, National Institutes of Health, 6701 Rockledge Drive, Room 3166, MSC 7770, Bethesda, MD 20892, (301) 435–1017, *helmersk@csr.nih.gov.*

Name of Committee: Center for Scientific Review Special Emphasis Panel, Physiology and Pathology of Organ Systems.

Date: July 17, 2007.

Time: 8 a.m. to 6 p.m.

Agenda: To review and evaluate grant applications.

Place: The Watergate Hotel, 2650 Virginia Avenue, NW., Washington, DC 20037.

Contact Person: Bukhtiar H. Shah, PhD, DVM, Scientific Review Administrator, Center for Scientific Review, National Institutes of Health, 6701 Rockledge Drive, Room 4213, MSC 7802, Bethesda, MD 20892, (301) 435–1233, *shahb@csr.nih.gov.*

Name of Committee: Center for Scientific Review Special Emphasis Panel, Brain Disorders and Clinical Neuroscience-Members.

Date: July 18, 2007.

Time: 2 p.m. to 5 p.m.

Agenda: To review and evaluate grant applications.

Place: National Institutes of Health, 6701 Rockledge Drive, Bethesda, MD 20892 (Telephone Conference Call).

Contact Person: Jay Joshi, PhD, Scientific Review Administrator, Center for Scientific Review, National Institutes of Health, 6701 Rockledge Drive, Room 5184, MSC 7846, Bethesda, MD 20892, (301) 435–1184, *joshij@csr.nih.gov.*

Name of Committee: Center for Scientific Review Special Emphasis Panel, Brain Disorders and Clinical Neuroscience-Members.

Date: July 19, 2007.

Time: 2 p.m. to 5 p.m.

Agenda: To review and evaluate grant applications.

Place: National Institutes of Health, 6701 Rockledge Drive, Bethesda, MD 20892 (Telephone Conference Call).

Contact Person: Jay Joshi, PhD, Scientific Review Administrator, Center for Scientific Review, National Institutes of Health, 6701 Rockledge Drive, Room 5184, MSC 7846, Bethesda, MD 20892, (301) 435–1184, *joshij@csr.nih.gov.*

Name of Committee: Center for Scientific Review Special Emphasis Panel, Xenopus Genetics and Genomics.

Date: July 23–24, 2007.

Time: 8 a.m. to 5 p.m.

Agenda: To review and evaluate grant applications.

Place: National Institutes of Health, 6701 Rockledge Drive, Bethesda, MD 20892, (Virtual Meeting).

Contact Person: Barbara J. Thomas, PhD, Scientific Review Administrator, Center for Scientific Review, National Institutes of Health, 6701 Rockledge Drive, Room 2218, MSC 7890, (301) 435–0603, *bthomas@csr.nih.gov.*

Name of Committee: Center for Scientific Review Special Emphasis Panel, Small Business: Arthritis, Connective Tissue and Skin Sciences.

Date: July 23, 2007.

Time: 8 a.m. to 12 p.m.

Agenda: To review and evaluate grant applications.

Place: The Watergate Hotel, 2650 Virginia Avenue, NW., Washington, DC 20037.

Contact Person: Harold M. Davidson, PhD, Scientific Review Administrator, Center for Scientific Review, National Institutes of Health, 6701 Rockledge Drive, Room 4222, MSC 7814, Bethesda, MD 20892, (301) 435–1776, *davidsoh@csr.nih.gov.*

Name of Committee: Center for Scientific Review Special Emphasis Panel, Stem Cells, Neuron Migration and Guidance.

Date: July 23, 2007.

Time: 1 p.m. to 3 p.m.

Agenda: To review and evaluate grant applications.

Place: National Institutes of Health, 6701 Rockledge Drive, Bethesda, MD 20892 (Telephone Conference Call).

Contact Person: Carol Hamelink, PhD, Scientific Review Administrator, Center for Scientific Review, National Institutes of Health, 6701 Rockledge Drive, Room 5040H, MSC 7850, Bethesda, MD 20892, (301) 451–1328, *hamelinc@csr.nih.gov.*

Name of Committee: Center for Scientific Review Special Emphasis Panel, Small Business: Digestive Sciences and Bioengineering.

Date: July 23, 2007.

Time: 1 p.m. to 4 p.m.

Agenda: To review and evaluate grant applications.

Place: National Institutes of Health, 6701 Rockledge Drive, Bethesda, MD 20892 (Virtual Meeting).

Contact Person: Bonnie L. Burgess-Beusse, PhD, Scientific Review Administrator, Center for Scientific Review, National Institutes of Health, 6701 Rockledge Drive, Room 2191C, MSC 7818, Bethesda, MD 20892, (301) 435–1783, *beusseb@mail.nih.gov.*

(Catalogue of Federal Domestic Assistance Program Nos. 93.306, Comparative Medicine; 93.333, Clinical Research, 93.306, 93.333, 93.337, 93.393–93.396, 93.837–93.844, 93.847–93.878, 93.892, 93.893, National Institutes of Health, HHS)

Dated: June 12, 2007.

Jennifer Spaeth,

Director, Office of Federal Advisory Committee Policy.

[FR Doc. 07–3014 Filed 6–19–07; 8:45 am]

BILLING CODE 4140–01–M

DEPARTMENT OF HEALTH AND HUMAN SERVICES

National Institutes of Health

Prospective Grant of Exclusive License: Anti-Mesothelin Antibodies Useful for Immunological Assays

AGENCY: National Institutes of Health, Public Health Service, HHS.

ACTION: Notice.

SUMMARY: This is notice, in accordance with 35 U.S.C. 209(c)(1) and 37 CFR 404.7(a)(1)(i), that the National Institutes of Health, Department of Health and Human Services, is contemplating the grant of an exclusive patent license to practice the inventions embodied in U.S. Patent Application No. 60/681,104, filed May 12, 2005, entitled ''Anti-Mesothelin Antibodies Useful For Immunological Assays'' [E–015–2005/0–US–01] and PCT Application No. PCT/US2006/018502, filed May 11, 2006, entitled ''Anti-Mesothelin Antibodies Useful For Immunological Assays'' [E–015–2005/0–PCT–02] to Cambridge Antibody Technology, Ltd., which has offices in Cambridge, United Kingdom. The patent rights in these inventions have been assigned to the United States of America.

The prospective exclusive license territory may be worldwide, and the field of use may be limited to the use of the SSIP immunoconjugate and variants thereof for the treatment of mesothelin expressing cancers.

DATES: Only written comments and/or applications for a license which are received by the NIH Office of Technology Transfer on or before August 20, 2007 will be considered.

ADDRESSES: Requests for copies of the patent application, inquiries, comments, and other materials relating to the contemplated exclusive license should be directed to: Jesse S. Kindra, J.D., M.S., Technology Licensing Specialist, Office of Technology Transfer, National Institutes of Health, 6011 Executive Boulevard, Suite 325, Rockville, MD 20852–3804; Telephone: (301) 435–5559; Facsimile: (301) 402–0220; E-mail: *kindraj@mail.nih.gov.*

SUPPLEMENTARY INFORMATION: This technology relates to anti-mesothelin antibodies with a particularly high affinity for mesothelin and the ability to be used in immunological assays for detecting the presence of mesothelin in biological samples. The anti-mesothelin antibodies are well-suited for the diagnosis and treatment of cancers of the ovary, stomach, squamous cells, mesotheliomas and other malignant cells expressing mesothelin.

The prospective exclusive license will be royalty bearing and will comply with the terms and conditions of 35 U.S.C. 209 and 37 CFR Part 404.7. The prospective exclusive license may be granted unless within sixty (60) days from the date of this published notice, the NIH receives written evidence and argument that establishes that the grant of the license would not be consistent with the requirements of 35 U.S.C. 209 and 37 CFR 404.7.

Applications for a license in the field of use filed in response to this notice will be treated as objections to the grant of the contemplated exclusive license. Comments and objections submitted to this notice will not be made available for public inspection and, to the extent permitted by law, will not be released under the Freedom of Information Act, 5 U.S.C. 552.

Dated: June 11, 2007.

Steven M. Ferguson,

Director, Division of Technology Development and Transfer,Office of Technology Transfer, National Institutes of Health.

[FR Doc. E7–11828 Filed 6–19–07; 8:45 am]

BILLING CODE 4140–01–P

DEPARTMENT OF HOMELAND SECURITY

The Critical Infrastructure Partnership Advisory Council (CIPAC)

AGENCY: Directorate for National Protection and Programs, DHS.

ACTION: Committee management; update on CIPAC committee membership.

SUMMARY: The Department of Homeland Security announced the establishment of the Critical Infrastructure Partnership Advisory Council (CIPAC) by Notice published in the **Federal Register** on March 24, 2006 (''First CIPAC Notice''). That Notice identified the purpose of the committee as well as its membership. This Notice provides the quarterly update including instructions on how the public can obtain the most current roster of CIPAC membership.

FOR FURTHER INFORMATION CONTACT: Brett Lambo, Partnership and Outreach Division, Office of Infrastructure Protection, National Protection and Programs Directorate, United States Department of Homeland Security, Washington, DC 20528, telephone (703) 235–5311 or via e-mail at *brett.lambo@dhs.gov.*

Responsible DHS Official: Nancy J. Wong, Director Infrastructure Programs Office, Partnership and Outreach Division, Office of Infrastructure Protection, National Protection and Programs Directorate, United States Department of Homeland Security, Washington, DC 20528, telephone (703) 235–5349.

SUPPLEMENTARY INFORMATION: The CIPAC is intended to facilitate interaction between representatives of government and the community of critical infrastructure and key resources (CI/KR) owners and operators in each critical sector. As set forth in the CIPAC's originating documents, it engages in: ''Planning; coordination; security program implementation; operational activities related to critical infrastructure protection security measures, including incident response, recovery, and reconstitution from events both man-made and naturally occurring; and the sharing of information about threats, vulnerabilities, protective measures, best practices, and lessons learned.''

CIPAC is designed to include as many of the owners and/or operators and the owner and/or operator representative trade associations deemed by each sector's Sector Coordinating Council (SCC) as necessary as participants in these activities. CIPAC Membership is comprised of the CI/KR owner and/or operator entities (and the trade associations that represent CI/KR owners and/or operators) which the Department of Homeland Security (DHS) in conjunction with the Sector Specific Agency (SSA) (when different than DHS) recognizes as members of that sector's Sector Coordinating Council (SCC). It also includes Federal, State, local, and tribal government agencies (or their representative bodies) that comprise the membership of the Government Coordinating Council (GCC) for each sector as recognized by DHS in conjunction with the Sector Specific Agency (SSA).

Owners and/or operators or trade associations representing the interests of owners and/or operators that own and invest in infrastructure assets, in the systems and processes to secure them, and that are held responsible by the public for their operations and the response and their recovery when their infrastructures or key resources are disrupted.

This Notice serves as a quarterly notice to provide instructions for obtaining the most current roster of CIPAC membership. The most recent membership roster is published on the CIPAC Web site *(http://www.dhs.gov/cipac).* The CIPAC Web site maintains an updated list of all Sector industry/institutional CIPAC membership and all government entities involved in CIPAC. Any member of the public may visit the Web site to learn about CIPAC membership, and find a list of meetings and agendas.

This Notice also serves to announce the first annual Plenary Meeting of the CIPAC to be held on July 19, 2007 in the Washington, DC Metropolitan area. The meeting will be open to the public. The CIPAC Web site noted above will provide details of the meeting as they become available.

Dated: June 12, 2007.

Nancy J. Wong,

Director, Infrastructure Programs Office, CI/KR Partnership and Outreach Division,United States Department of Homeland Security.

[FR Doc. E7–11840 Filed 6–19–07; 8:45 am]

BILLING CODE 4410–10–P

DEPARTMENT OF HOMELAND SECURITY

Federal Emergency Management Agency

Agency Information Collection Activities: Submission for OMB Review; Comment Request

AGENCY: Federal Emergency Management Agency, DHS.

ACTION: Notice and request for comments.

SUMMARY: The Federal Emergency Management Agency (FEMA) has submitted the following information collection to the Office of Management and Budget (OMB) for review and clearance in accordance with the requirements of the Paperwork Reduction Act of 1995. The submission describes the nature of the information collection, the categories of respondents, the estimated burden (*i.e.*, the time, effort and resources used by respondents to respond) and cost, and includes the actual data collection instruments FEMA will use.

Title: The National Flood Insurance Program Biennial Report.

OMB Number: 1660–0003.

Abstract: The National Flood Insurance Program (NFIP) Biennial Report enables FEMA to meet its regulatory requirement under 44 CFR 59.22(b)(2). It also enables FEMA to be more responsive to the ongoing changes that occur in each participating community's flood hazard area. These changes include, but are not limited to, new corporate boundaries, changes in flood hazard areas, new floodplain management measures, and changes in rate of floodplain development. It is also used to evaluate the effectiveness of the community's floodplain management activities. The evaluation is accomplished by analyzing information provided by the community, such as the number of variances and floodplain permits granted by each community in relationship to other information contained in the Biennial Report as well as other data available in FEMA's Community Information System (CIS). The Biennial Report also provides an opportunity for NFIP participating communities to request technical assistance in implementing a floodplain management program. FEMA regional offices use this information as a means to know which communities need support and guidance.

The NFIP Biennial Report is also one of the tools used to assist FEMA in meeting its requirement under section 575 of the National Flood Insurance Reform Act. A ''yes'' answer to Item A–D in Section I of the report will provide the basis for FEMA to follow-up by contacting the community for clarification and/or elaboration regarding changes and activities occurring in a community's flood hazard area. This information will be used in ranking and prioritizing one community's mapping needs against all other communities in the NFIP and for determining how the limited flood hazard mapping funds are allocated for map updates.

Affected Public: State, local or tribal governments, farms, individuals or households, business or other for-profit, not-for-profit institutions representing the estimated 20,500 United States and United States territorial communities that are participating members of the NFIP. The NFIP requires that communities participating in the NFIP

submit an annual or biennial report describing the progress made during the year in the implementation and enforcement of floodplain management regulations.

Number of Respondents: 20,500.

Estimated Time per Respondent: Up to three hours or less per claim.

Estimated Total Annual Burden Hours: 24,501.

Frequency of Response: Once every two years.

Comments: Interested persons are invited to submit written comments on the proposed information collection to the Office of Information and Regulatory Affairs, Office of Management Budget, Attention: Nathan Lesser, Desk Officer, Department of Homeland Security/FEMA, and sent via electronic mail to *oira_submission@omb.eop.gov* or faxed to (202) 395–6974. Comments must be submitted on or before July 20, 2007.

FOR FURTHER INFORMATION CONTACT: Requests for additional information or copies of the information collection should be made to Chief, Records Management, FEMA, 500 C Street, SW., Room 609, Washington, DC 20472, facsimile number (202) 646–3347, or e-mail address *FEMA-Information-Collections@dhs.gov*.

Dated: June 11, 2007.

John A. Sharetts-Sullivan,

Chief, Records Management and Privacy, Office of Management Directorate, Information Resources Management Branch, Information Technology Services Division, Federal Emergency Management Agency, Department of Homeland Security.

[FR Doc. 07–3007 Filed 6–19–07; 8:45 am]

BILLING CODE 9110–12–P

DEPARTMENT OF HOMELAND SECURITY

Federal Emergency Management Agency

Agency Information Collection Activities: Proposed Collection; Comment Request

AGENCY: Federal Emergency Management Agency, DHS.

ACTION: Notice and request for comments.

SUMMARY: The Federal Emergency Management Agency (FEMA), as part of its continuing effort to reduce paperwork and respondent burden, invites the general public and other Federal agencies to take this opportunity to comment on a proposed revised information collection. In accordance with the Paperwork Reduction Act of 1995, this notice seeks comments concerning information required by FEMA to revise National Flood Insurance Program (NFIP) Maps.

SUPPLEMENTARY INFORMATION: With the passage of the Flood Disaster Protection Act of 1973, an owner of a structure, with a federally backed mortgage, located in the 1-percent annual chance floodplain, was required to purchase federal flood insurance. This was in response to the escalating damage caused by flooding and the unavailability of flood insurance from commercial insurance companies. As part of this effort, FEMA mapped the 1-percent annual chance floodplain in communities. However, the 1-percent annual chance floodplain may change due to changes within the floodplain, or may be more accurately depicted through the use of more up-to-date methods and data. FEMA will issue a Letter of Map Revision (LOMR) to officially revise the 1-percent annual chance floodplain.

Collection of Information

Title: Revision to National Flood Insurance Program Maps: Application Forms for LOMRs and Conditional LOMRs.

Type of Information Collection: Revision of a currently approved collection.

OMB Number: 1660–0016.

Form Numbers: FEMA Forms 81–89, 81–89A, 81–89B, 81–89C, 81–89D, 81–89E.

Abstract: The certification forms (referred to as MT–2 series forms) are designed to assist requesters in gathering information that FEMA needs to revise a NFIP map. FEMA Form 81–89, Overview and Concurrence Form, describes the location of the request, what is being requested, and what data are required to support the request. In addition, NFIP regulations 44 CFR 65.5(a)(4) require that a community official certify that the request complies with minimum floodplain management criteria specified in 44 CFR 60.3. This form ensures that this requirement is fulfilled prior to the submittal of the request to FEMA. FEMA Form 81–89A, Riverine Hydrology and Hydraulics Form, allows FEMA to efficiently review assumptions made, parameters used, and the results of hydrologic and hydraulic analyses performed in support of a revision request. It also addresses more common regulatory issues; FEMA Form 81–89B, Riverine Structures Form, allows FEMA to efficiently review assumptions made, parameters used, and the results of revision requests involving new or modified structures in riverine flood hazard areas; FEMA Form 81–89C, Coastal Analysis Form, allows FEMA to efficiently review assumptions made, parameters used, and the results of coastal analyses performed in support of a revision request. It also addresses more common regulatory issues; FEMA Form 81–89D, Coastal Structures Form, allows FEMA to efficiently review assumptions made, parameters used, and the results of revision requests involving new or modified structures in coastal flood hazard areas; FEMA Form 81–89E, Alluvial Fan Flooding Form, allows FEMA to efficiently review assumptions made, parameters used, and the results of alluvial fan flooding analyses performed in support of a revision request.

Affected Public: Business and other for profit organization such as Land Surveyors or Engineering firms will primarily be affected by the collection. In addition, home owners, local or state officials may also be affected in some instances.

Estimated Total Annual Burden Hours: 24,360.

ANNUAL BURDEN HOURS

Project/activity (survey, form(s), focus group, worksheet, etc.)	Number of respondents (A)	Frequency of responses (B)	Burden hours per respondent (C)	Annual responses (D) = (A×B)	Total annual burden hours (E) = (C×D)
Form 81–89, Overview and Concurrence Form	1,680	Annual (1)	1.0	1,680	1,680
Form 81–89A, Riverine Hydrology & Hydraulics Form	1,680	Annual (1)	3.5	1,680	5,880
Form 81–89B, Riverine Structures Form	1,680	Annual (1)	7.0	1,680	11,760
Form 81–89C, Coastal Analysis Form	1,680	Annual (1)	1.0	1,680	1,680
Form 81–89D, Coastal Structures Form	1,680	Annual (1)	1.0	1,680	1,680

ANNUAL BURDEN HOURS—Continued

Project/activity (survey, form(s), focus group, worksheet, etc.)	Number of respondents (A)	Frequency of responses (B)	Burden hours per respondent (C)	Annual responses (D) = (A×B)	Total annual burden hours (E) = (C×D)
Form 81–89E, Alluvial Fan Flooding Form	1,680	Annual (1)	1.0	1,680	1,680
Total	*1,680		14.5	10,080	24,360

*The number of respondents equals total number of collection packages received. Estimated number of collection packages received in a given year is 1,680.

Estimated Cost: Cost to respondent is estimated to be approximately $29.4 million annually.

Comments: Written comments are solicited to (a) evaluate whether the proposed data collection is necessary for the proper performance of the agency, including whether the information shall have practical utility; (b) evaluate the accuracy of the agency's estimate of the burden of the proposed collection of information, including the validity of the methodology and assumptions used; (c) enhance the quality, utility, and clarity of the information to be collected; and (d) minimize the burden of the collection of information on those who are to respond, including through the use of appropriate automated, electronic, mechanical, or other technological collection techniques or other forms of information technology, *e.g.*, permitting electronic submission of responses. Comments must be submitted on or before August 20, 2007.

ADDRESSES: Interested persons should submit written comments to Chief, Records Management and Privacy, Office of Management Directorate. Information Resources Management Branch, Information Technology Services Division, Federal Emergency Management Agency, 500 C Street, SW., Room 609, Washington, DC 20472.

FOR FURTHER INFORMATION CONTACT: Contact Ms. Cecelia Lynch, FEMA Federal Insurance and Mitigation Administration at (202) 646–7045 for additional information. You may contact the Records Management Branch for copies of the proposed collection of information at facsimile number (202) 646–3347 or e-mail address: *FEMA-Information-Collections@dhs.gov*.

Dated: June 7, 2007.

John A. Sharetts-Sullivan,

Chief, Records Management and Privacy, Office of Management Directorate, Information Technology Services Division, Information Resources Management Branch, Federal Emergency Management Agency, Department of Homeland Security.

[FR Doc. 07–3008 Filed 6–19–07; 8:45 am]

BILLING CODE 9110–11–P

DEPARTMENT OF HOMELAND SECURITY

Federal Emergency Management Agency

Agency Information Collection Activities: Submission for OMB Review; Comment Request

AGENCY: Federal Emergency Management Agency, DHS.

ACTION: Notice and request for comments.

SUMMARY: The Federal Emergency Management Agency (FEMA) has submitted the following information collection to the Office of Management and Budget (OMB) for review and clearance in accordance with the requirements of the Paperwork Reduction Act of 1995. The submission describes the nature of the information collection, the categories of respondents, the estimated burden (*i.e.*, the time, effort and resources used by respondents to respond) and cost, and includes the actual data collection instruments FEMA will use.

Title: Application Form for Single Residential Lot or Structure Amendments to National Flood Insurance Program Maps.

OMB Number: 1660–0037.

Abstract: FEMA Form 81–92 is designed to assist requester in gathering information that FEMA needs to determine whether a certain single-lot property or structure is likely to be flooded during a flood event that has a one-percent annual chance of being equaled or exceeded in any given year (based flood). FEMA Form 81–92A is a Spanish version of FEMA Form 81–92 and, as such, only one of the two forms would be required for any one application.

Affected Public: Individuals or household (homeowners) and business or other for profit.

Number of Respondents: 26,400.

Estimated Time per Respondent: 2.4.

Estimated Total Annual Burden Hours: 31,680.

Frequency of Response: 1.

Comments: Interested persons are invited to submit written comments on the proposed information collection to the Office of Information and Regulatory Affairs, Office of Management and Budget, Attention: Nathan Lesser, Desk Officer, Department of Homeland Security/FEMA, and sent via electronic mail to *oira_submission@omb.eop.gov* or faxed to (202) 395–6974. Comments must be submitted on or before July 20, 2007.

FOR FURTHER INFORMATION CONTACT: Requests for additional information or copies of the information collection should be made to Chief, Records Management, FEMA, 500 C Street, SW., Room 609, Washington, DC 20472, facsimile number (202) 646–3347, or e-mail address *FEMA-Information-Collections@dhs.gov.*

Dated: June 12, 2007.

John A. Sharetts-Sullivan,

Chief, Records Management and Privacy, Office of Management Directorate, Information Resources Management Branch, Information Technology Services Division, Federal Emergency Management Agency, Department of Homeland Security.

[FR Doc. E7–11952 Filed 6–19–07; 8:45 am]

BILLING CODE 9110–12–P

DEPARTMENT OF HOMELAND SECURITY

Federal Emergency Management Agency

Agency Information Collection Activities: Submission for OMB Review; Comment Request

AGENCY: Federal Emergency Management Agency, DHS.

ACTION: Notice and request for comments.

SUMMARY: The Federal Emergency Management Agency (FEMA) has submitted the following information collection to the Office of Management and Budget (OMB) for review and clearance in accordance with the requirements of the Paperwork Reduction Act of 1995. The submission describes the nature of the information collection, the categories of respondents, the estimated burden (*i.e.*, the time, effort and resources used by respondents to respond) and cost, and includes the actual data collection instruments FEMA will use.

Title: National Flood Insurance Program Claims Forms.

OMB Number: 1660–0005.

Abstract: The claim forms used for the National Flood Insurance Program are used by policyholders and adjusters to collect the information needed to investigate, document, evaluate, and settle claims against National Flood Insurance Program policies for flood damage to their insured property or qualification for benefits under IncreasedCost of Compliance coverage.

Affected Public: Individuals or households; Business or other for-profit; Not-for-profit institutions; farms; Federal government; State, local or tribal government.

Number of Respondents: 42,225.

Estimated Time per Respondent: Up to 4 hours or less per claim.

Estimated Total Annual Burden Hours: 29,448.

Frequency of Response: Once.

Comments: Interested persons are invited to submit written comments on the proposed information collection to the Office of Information and Regulatory Affairs, Office of Management and Budget, Attention: Nathan Lesser, Desk Officer, Department of Homeland Security/FEMA, and sent via electronic mail to *oira_submission@omb.eop.gov* or faxed to (202) 395–6974. Comments must be submitted on or before July 20, 2007.

FOR FURTHER INFORMATION CONTACT: Requests for additional information or copies of the information collection should be made to Chief, Records Management, FEMA, 500 C Street, SW., Room 609, Washington, DC 20472, facsimile number (202) 646–3347, or e-mail address *FEMA-Information-Collections@dhs.gov.*

Dated: June 8, 2007.

John A. Sharetts-Sullivan,

Chief, Records Management and Privacy, Office of Management Directorate, Information Resources Management Branch, Information Technology Services Division, Federal Emergency Management Agency, Department of Homeland Security.

[FR Doc. E7–11953 Filed 6–19–07; 8:45 am]

BILLING CODE 9110–12–P

DEPARTMENT OF HOMELAND SECURITY

Federal Emergency Management Agency

[FEMA–1705–DR]

Iowa; Amendment No. 1 to Notice of a Major Disaster Declaration

AGENCY: Federal Emergency Management Agency, DHS.

ACTION: Notice.

SUMMARY: This notice amends the notice of a major disaster declaration for the State of Iowa (FEMA–1705–DR), dated May 25, 2007, and related determinations.

EFFECTIVE DATE: June 8, 2007.

FOR FURTHER INFORMATION CONTACT: Peggy Miller, Disaster Assistance Directorate, Federal Emergency Management Agency, Washington, DC 20472, (202) 646–2705.

SUPPLEMENTARY INFORMATION: The notice of a major disaster declaration for the State of Iowa is hereby amended to include the following area among those areas determined to have been adversely affected by the catastrophe declared a major disaster by the President in his declaration of May 25, 2007.

Dallas County for Individual Assistance

(The following Catalog of Federal Domestic Assistance Numbers (CFDA) are to be used for reporting and drawing funds: 97.030, Community Disaster Loans; 97.031, Cora Brown Fund Program; 97.032, Crisis Counseling; 97.033, Disaster Legal Services Program; 97.034, Disaster Unemployment Assistance (DUA); 97.046, Fire Management Assistance; 97.048, Individuals and Households Housing; 97.049, Individuals and Households Disaster Housing Operations; 97.050, Individuals and Households Program—Other Needs; 97.036, Public Assistance Grants; 97.039, Hazard Mitigation Grant Program.)

R. David Paulison,

Administrator, Federal Emergency Management Agency.

[FR Doc. 07–3011 Filed 6–19–07; 8:45 am]

BILLING CODE 9110–10–P

DEPARTMENT OF HOMELAND SECURITY

Federal Emergency Management Agency

[FEMA–1699–DR]

Kansas; Amendment No. 7 to Notice of a Major Disaster Declaration

AGENCY: Federal Emergency Management Agency, DHS.

ACTION: Notice.

SUMMARY: This notice amends the notice of a major disaster declaration for the State of Kansas (FEMA–1699-DR), dated May 6, 2007, and related determinations.

EFFECTIVE DATE: June 11, 2007.

FOR FURTHER INFORMATION CONTACT: Peggy Miller, Disaster Assistance Directorate, Federal Emergency Management Agency, Washington, DC 20472, (202) 646–2705.

SUPPLEMENTARY INFORMATION: The notice of a major disaster declaration for the State of Kansas is hereby amended to include the following areas among those areas determined to have been adversely affected by the catastrophe declared a major disaster by the President in his declaration of May 6, 2007.

Dickinson and Ellsworth Counties for Individual Assistance (already designated for Public Assistance.)

(The following Catalog of Federal Domestic Assistance Numbers (CFDA) are to be used for reporting and drawing funds: 97.030, Community Disaster Loans; 97.031, Cora Brown Fund Program; 97.032, Crisis Counseling; 97.033, Disaster Legal Services Program; 97.034, Disaster Unemployment Assistance (DUA); 97.046, Fire Management Assistance; 97.048, Individuals and Households Housing; 97.049, Individuals and Households Disaster Housing Operations; 97.050, Individuals and Households Program—Other Needs; 97.036, Public Assistance Grants; 97.039, Hazard Mitigation Grant Program.)

R. David Paulison,

Administrator, Federal Emergency Management Agency.

[FR Doc. 07–3010 Filed 6–19–07; 8:45 am]

BILLING CODE 9110–10–P

DEPARTMENT OF HOMELAND SECURITY

Federal Emergency Management Agency

[FEMA–1708–DR]

Missouri; Major Disaster and Related Determinations

AGENCY: Federal Emergency Management Agency, DHS.

ACTION: Notice.

SUMMARY: This is a notice of the Presidential declaration of a major disaster for the State of Missouri (FEMA–1708–DR), dated June 11, 2007, and related determinations.

EFFECTIVE DATE: June 11, 2007.

FOR FURTHER INFORMATION CONTACT: Peggy Miller, Disaster Assistance Directorate, Federal Emergency Management Agency, Washington, DC 20472, (202) 646–2705.

SUPPLEMENTARY INFORMATION: Notice is hereby given that, in a letter dated June 11, 2007, the President declared a major disaster under the authority of the Robert T. Stafford Disaster Relief and Emergency Assistance Act, 42 U.S.C. 5121–5206 (the Stafford Act), as follows:

I have determined that the damage in certain areas of the State of Missouri resulting from severe storms and flooding during the period of May 5–18, 2007, is of sufficient severity and magnitude to warrant a major disaster declaration under the Robert T. Stafford Disaster Relief and Emergency Assistance Act, 42 U.S.C. 5121–5206 (the Stafford Act). Therefore, I declare that such a major disaster exists in the State of Missouri.

In order to provide Federal assistance, you are hereby authorized to allocate from funds available for these purposes such amounts as you find necessary for Federal disaster assistance and administrative expenses.

You are authorized to provide Individual Assistance and Public Assistance in the designated areas, and Hazard Mitigation throughout the State. Consistent with the requirement that Federal assistance be supplemental, any Federal funds provided under the Stafford Act for Hazard Mitigation and Other Needs Assistance will be limited to 75 percent of the total eligible costs. Federal funds provided under the Stafford Act for Public Assistance will be limited to 75 percent of the total eligible costs, except for any particular projects that are eligible for a higher Federal cost-sharing percentage under the FEMA Public Assistance Pilot Program instituted pursuant to 6 U.S.C. 777. Further, you are authorized to make changes to this declaration to the extent allowable under the Stafford Act.

The time period prescribed for the implementation of section 310(a), Priority to Certain Applications for Public Facility and Public Housing Assistance, 42 U.S.C. 5153, shall be for a period not to exceed six months after the date of this declaration.

The Federal Emergency Management Agency (FEMA) hereby gives notice that pursuant to the authority vested in the Administrator, under Executive Order 12148, as amended, Lee H. Rosenberg, of FEMA is appointed to act as the Federal Coordinating Officer for this declared disaster.

I do hereby determine the following areas of the State of Missouri to have been affected adversely by this declared major disaster:

Andrew, Atchison, Buchanan, Carroll, Chariton, Clay, Daviess, DeKalb, Gentry, Holt, Jackson, Lafayette, Livingston, Morgan, Nodaway, Osage, and Platte Counties for Individual Assistance.

Andrew, Atchison, Bates, Carroll, Cass, Chariton, Daviess, Gentry, Grundy, Harrison, Holt, Howard, Livingston, Mercer, Nodaway, Platte, Ray, Saline, and Worth Counties for Public Assistance.

All counties within the State of Missouri are eligible to apply for assistance under the Hazard Mitigation Grant Program.

(The following Catalog of Federal Domestic Assistance Numbers (CFDA) are to be used for reporting and drawing funds: 97.030, Community Disaster Loans; 97.031, Cora Brown Fund Program; 97.032, Crisis Counseling; 97.033, Disaster Legal Services Program; 97.034, Disaster Unemployment Assistance (DUA); 97.046, Fire Management Assistance; 97.048, Individuals and Households Housing; 97.049, Individuals and Households Disaster Housing Operations; 97.050, Individuals and Households Program—Other Needs; 97.036, Public Assistance Grants; 97.039, Hazard Mitigation Grant Program.)

R. David Paulison,

Administrator, Federal Emergency Management Agency.

[FR Doc. 07–3009 Filed 6–19–07; 8:45 am]

BILLING CODE 9110–10–P

DEPARTMENT OF HOMELAND SECURITY

Transportation Security Administration

Intent To Request Renewal From OMB of One Current Public Collection of Information: Office of Law Enforcement/Federal Air Marshal Service Mental Health Certification

AGENCY: Transportation Security Administration, DHS.

ACTION: Notice.

SUMMARY: The Transportation Security Administration (TSA) invites public comment on one currently approved information collection requirement (ICR) abstracted below that we will submit to the Office of Management and Budget (OMB) for renewal in compliance with the Paperwork Reduction Act. The collection requires applicants for the Office of Law Enforcement/Federal Air Marshal positions to complete a certification form regarding their mental history.

DATES: Send your comments by August 20, 2007.

ADDRESSES: Comments may be mailed or delivered to Joanna Johnson, Communications Branch, Business Management Office, Operational Process and Technology, TSA–32, Transportation Security Administration, 701 South 12th Street, Arlington, VA 22202–4220.

FOR FURTHER INFORMATION CONTACT: Joanna Johnson at the above address, or by telephone (571) 227–3651 or facsimile (571) 227–3588.

SUPPLEMENTARY INFORMATION:

Comments Invited

In accordance with the Paperwork Reduction Act of 1995 (44 U.S.C. 3501 *et seq.*), an agency may not conduct or sponsor, and a person is not required to respond to, a collection of information unless it displays a valid OMB control number. The ICR documentation is available at *http://www.reginfo.gov*. In preparation for OMB review and approval of the following information collection, TSA is inviting comments to—

(1) Evaluate whether the proposed information requirement is necessary for the proper performance of the functions of the agency, including whether the information will have practical utility;

(2) Evaluate the accuracy of the agency's estimate of the burden;

(3) Enhance the quality, utility, and clarity of the information to be collected; and

(4) Minimize the burden of the collection of information on those who are to respond, including using appropriate automated, electronic, mechanical, or other technological collection techniques or other forms of information technology.

Information Collection Requirement

OMB approved TSA's emergency processing of this information collection and assigned it OMB control number 1652–0043. See the **Federal Register** notice published on December 5, 2006 (71 FR 70524). TSA now seeks to renew this collection for the maximum three-year period under the Paperwork Reduction Act. Pursuant to 49 U.S.C. 44917, TSA has authority to provide for deployment of Federal Air Marshals (FAMs) on passenger flights and provide for appropriate training, supervision,

and equipment of FAMs. In furtherance of this authority, TSA policy requires that applicants for the Office of Law Enforcement/Federal Air Marshal positions meet certain medical standards, including Federal Aviation Administration second-class airman standards as outlined in 14 CFR part 67.

The TSA modifications to these standards include a psychological evaluation determining that individuals do not have an established medical history or clinical diagnosis of psychosis, neurosis, or any other personality or mental disorder that clearly demonstrates a potential hazard to the performance of FAM duties or the safety of self or others. As part of the psychological evaluation, applicants are required to complete a certification form regarding their mental health history and provide an explanation for anything they cannot certify. Applicants will be asked whether they can certify various statements including that they have never been removed from work for medical or psychological reasons. Applicants submit this certification form directly to the FAMs Medical Program via fax, electronically by scanning the document, by mail, or in person. Any explanations received will generally require further review and follow-up by a contract psychologist or psychiatrist. This certification is carefully geared to capitalize on other elements of the assessment process, such as personal interviews, physical task assessment, background investigation, as well as the other components of the medical examination and assessment. The estimated annual reporting burden is 10,000 hours based on an estimated 10,000 respondents.

Issued in Arlington, Virginia, on June 13, 2007.

Fran Lozito,

Director of Business Management Office,Operational Process and Technology.

[FR Doc. E7–11819 Filed 6–19–07; 8:45 am]

BILLING CODE 9910–05–P

DEPARTMENT OF HOUSING AND URBAN DEVELOPMENT

[Docket No. FR–5117–N–50]

Notice of Submission of Proposed Information Collection to OMB; Community Development Work Study Program

AGENCY: Office of the Chief Information Officer, HUD.

ACTION: Notice.

SUMMARY: The proposed information collection requirement described below has been submitted to the Office of Management and Budget (OMB) for review, as required by the Paperwork Reduction Act. The Department is soliciting public comments on the subject proposal.

Community Development Work Study Program application for grantee selection and reports monitoring the administration of funds granted to colleges and universities. The grants help economically disadvantaged and minority students earn masters degrees in community building fields.

DATES: *Comments Due Date:* July 20, 2007.

ADDRESSES: Interested persons are invited to submit comments regarding this proposal. Comments should refer to the proposal by name and/or OMB approval Number (2528–0175) and should be sent to: HUD Desk Officer, Office of Management and Budget, New Executive Office Building, Washington, DC 20503; fax: 202–395–6974.

FOR FURTHER INFORMATION CONTACT: Lillian Deitzer, Departmental Reports Management Officer, QDAM, Department of Housing and Urban Development, 451 Seventh Street, SW., Washington, DC 20410; e-mail *Lillian_L._Deitzer@HUD.gov* or telephone(202) 708–2374. This is not a toll-free number. Copies of available documents submitted to OMB may be obtained from Ms. Deitzer or from HUD's Web site at *http://www5.hud.gov:63001/po/i/icbts/collectionsearch.cfm*.

SUPPLEMENTARY INFORMATION: This notice informs the public that the Department of Housing and Urban Development has submitted to OMB a request for approval of the information collection described below. This notice is soliciting comments from members of the public and affected agencies concerning the proposed collection of information to: (1) Evaluate whether the proposed collection of information is necessary for the proper performance of the functions of the agency, including whether the information will have practical utility; (2) Evaluate the accuracy of the agency's estimate of the burden of the proposed collection of information; (3) Enhance the quality, utility, and clarity of the information to be collected; and (4) Minimize the burden of the collection of information on those who are to respond; including through the use of appropriate automated collection techniques or other forms of information technology, e.g., permitting electronic submission of responses.

This notice also lists the following information:

Title of Proposal: Community Development Work Study Program

OMB Approval Number: 2528–0175

Form Numbers: HUD–3007, HUD–30013, HUD–30014, HUD–30015, plus standard grant application forms: SF–424, SF–424–Supp, HUD–424–CB, HUD–2880, HUD–2993, HUD–2994–A

Description of the Need for the Information and Its Proposed Use: Community Development Work Study Program application for grantee selection and reports monitoring the administration of funds granted to colleges and universities. The grants help economically disadvantaged and minority students earn masters degrees in community building fields.

Frequency of Submission: On occasion, Annually.

	Number of respondents	Annual responses	×	Hours per response	=	Burden hours
Reporting burden	60	3.5		15.71		3,300

Total Estimated Burden Hours: 3,300.

Status: Revision of a current collection.

Authority: Section 3507 of the Paperwork Reduction Act of 1995, 44 U.S.C. 35, as amended.

Dated: June 13, 2007.

Lillian L. Deitzer,

Departmental Paperwork Reduction Act Officer,Office of the Chief Information Officer.

[FR Doc. E7–11855 Filed 6–19–07; 8:45 am]

BILLING CODE 4210–67–P

DEPARTMENT OF THE INTERIOR

Fish and Wildlife Service

Information Collection Sent to the Office of Management and Budget (OMB) for Approval; OMB Control Number 1018–0123; International Conservation Grant Programs

AGENCY: Fish and Wildlife Service, Interior.

ACTION: Notice; request for comments.

SUMMARY: We (Fish and Wildlife Service) have sent an Information Collection Request (ICR) to OMB for review and approval. The ICR, which is summarized below, describes the nature of the collection and the estimated burden and cost. This ICR is scheduled to expire on June 30, 2007. We may not conduct or sponsor and a person is not required to respond to a collection of information unless it displays a currently valid OMB control number. However, under OMB regulations, we may continue to conduct or sponsor this information collection while it is pending at OMB.

DATES: You must submit comments on or before July 20, 2007.

ADDRESSES: Send your comments and suggestions on this ICR to the Desk Officer for the Department of the Interior at OMB-OIRA at (202) 395–6566 (fax) or OIRA_DOCKET@OMB.eop.gov (e-mail). Please provide a copy of your comments to Hope Grey, Information Collection Clearance Officer, Fish and Wildlife Service, MS 222–ARLSQ, 4401 North Fairfax Drive, Arlington, VA 22203 (mail); (703) 358–2269 (fax); or hope_grey@fws.gov (e-mail).

FOR FURTHER INFORMATION CONTACT: To request additional information about this IC, contact Hope Grey by mail, fax, or e-mail (see ADDRESSES) or by telephone at (703) 358–2482.

SUPPLEMENTARY INFORMATION:

OMB Control Number: 1018–0123.

Title: International Conservation Grant Programs.

Service Form Number(s): 3–2338.

Type of Request: Revision of currently approved collection.

Affected Public: Domestic and nondomestic Federal, State, and local governments; nonprofit, nongovernmental organizations; public and private institutions of higher education; and any other organization or individual with demonstrated experience deemed necessary to carry out the proposed project.

Respondent's Obligation: Required to obtain or retain a benefit.

Frequency of Collection: Annually.

Estimated Annual Number of Respondents: 605 (489 applications; 116 reports).

Estimated Total Annual Responses: 721 (489 applications; 232 reports).

Estimated Time per Response: 12 hours per application; 30 hours per report.

Estimated Total Annual Burden Hours: 12,828 (5,868 for applications; 6,960 for reports).

Abstract: The Division of International Conservation awards grants funded under the:

(1) African Elephant Conservation Act (16 U.S.C. 4201–4245).

(2) Asian Elephant Conservation Act of 1997 (16 U.S.C. 4261).

(3) Great Ape Conservation Act of 2000 (Pub. L. 106–411).

(4) Rhinoceros and Tiger Conservation Act of 1994 (16 U.S.C. 5306).

(5) Marine Turtle Conservation Act (Pub. L. 108–266).

(6) Wildlife Without Borders Programs - Mexico, Latin America and the Caribbean, and Russia.

The information that we collect for grants awarded under the Marine Turtle Conservation Act is approved under OMB Control No. 1018–0128, which expires March 31, 2009. We are proposing to include that information collection with the others in this approval request, all under OMB Control Number 1018–0123.

Applicants submit proposals for funding in response to Notices of Funding Availability that we publish on Grants.gov. We collect the following information under each Notice of Funding Availability:

(1) Cover page with basic project details (FWS Form 3–2338). This is a new form that we propose to replace the six forms currently approved under OMB Control No. 1018–0123.

(2) Project summary and narrative.

(3) Letter of appropriate government endorsement.

(4) Brief curricula vitae for key project personnel.

(5) Complete Standard Forms 424, 424a and 424b (nondomestic applicants do not submit the standard forms).

Proposals may also include, as appropriate, a copy of the organization's Negotiated Indirect Cost Rate Agreement (NIRCA) and any additional documentation supporting the proposed project.

The project summary and narrative is the basis for this information collection request for approval. A panel of technical experts reviews each proposal to assess how well the project addresses the priorities identified by each program's authorizing legislation. As all of the on-the-ground projects funded by these programs are conducted outside the United States, the letter of appropriate government endorsement ensures that the proposed activities will not meet with local resistance or work in opposition to locally identified priorities and needs. Brief curricula vitae for key project personnel allow the review panel to assess the qualifications of project staff to effectively carry out the project goals and objectives. As all Federal entities must honor the indirect cost rates an organization has negotiated with its cognizant agency, we require all organizations with a NICRA to submit the agreement paperwork with their proposals to verify how their rate is applied in their proposed budget. Applicants may provide any additional documentation that they believe best supports their proposal.

Comments: On March 16, 2007, we published in the **Federal Register** (72 FR 12630) a notice of our intent to request that OMB renew authority for this information collection. We solicited comments for 60 days, ending on May 15, 2007. We received one comment. The commenter did not address the information collection requirements, but did express a general concern as to whether appropriated funds were reaching the intended species. We have not made any changes to our information collection as a result of the comment.

We again invite comments concerning this information collection on:

(1) whether or not the collection of information is necessary, including whether or not the information will have practical utility;

(2) the accuracy of our estimate of the burden for this collection of information;

(3) ways to enhance the quality, utility, and clarity of the information to be collected; and

(4) ways to minimize the burden of the collection of information on respondents.

Comments that you submit in response to this notice are a matter of public record. Before including your address, phone number, e-mail address,

or other personal identifying information in your comment, you should be aware that your entire comment, including your personal identifying information, may be made publicly available at any time. While you can ask OMB in your comment to withhold your personal identifying information from public review, we cannot guarantee that it will be done.

Dated: June 12, 2007.

Hope Grey,

Information Collection Clearance Officer, Fish and Wildlife Service.

FR Doc. E7–11909 Filed 6–19–07; 8:45 am

Billing Code 4310–55–S

DEPARTMENT OF THE INTERIOR

Bureau of Indian Affairs

Draft Environmental Impact Statement for the Proposed Desert Rock Energy Project and the Navajo Mine Extension Project, San Juan County, NM

AGENCY: Bureau of Indian Affairs, Interior.

ACTION: Notice.

SUMMARY: This notice advises the public that the Bureau of Indian Affairs (BIA) as lead agency, with the Navajo Nation, U.S. Bureau of Land Management (BLM), Office of Surface Mining, Reclamation and Enforcement (OSM), Environmental Protection Agency (EPA) and Army Corps of Engineers (USACE) as cooperating agencies, intends to file a Draft Environmental Impact Statement (DEIS) with the EPA for the proposed Desert Rock Energy and Navajo Mine Extension projects. The purpose of the proposed action is to help meet the economic development needs of the Navajo Nation. This notice also announces a series of public hearings to receive comments on the DEIS.

DATES: Written comments on the DEIS must arrive by August 20, 2007. The dates and times for the public hearings are as follows:

- July 17, 2007, 5 p.m. to 8 p.m.
- July 18, 2007 (2), 10 a.m. to 1 p.m. and 5 p.m. to 8 p.m.
- July 19, 2007, 1 p.m. to 4 p.m.
- July 20, 2007, 1 p.m. to 4 p.m.
- July 23, 2007 (2), 10 a.m. to 1 p.m. and 5 p.m. to 8 p.m.
- July 24, 2007 (2), 10 a.m. to 1 p.m. and 5 p.m. to 8 p.m.
- July 25, 2007, 10 a.m. to 1 p.m.

ADDRESSES: You may mail or hand carry written comments to Harrilene Yazzie, NEPA Coordinator, Navajo Regional Office, Bureau of Indian Affairs, P.O. Box 1060, Gallup, New Mexico 87305. Comments may also be sent by e-mail to the project Web site, *http://www.desertrockenergy.com,* or to the BIA contractor's e-mail account for this project, *DesertrockEIS@urscorp.com.* Please include the caption, ''Desert Rock Energy Project DEIS Comments'' at the top of your letter or in the subject line of your e-mail message; be specific in your comments and cite the chapter, page, paragraph, and sentence to which they pertain; and include your name and return address in your letter or message.

The DEIS is available for review at the BIA Office, 301 West Hill Street, Gallup, New Mexico 87305. A limited number of CD and paper copies of the DEIS are also available upon request. You may obtain a CD or paper copy by contacting Harrilene Yazzie at the BIA mailing address provided above, at her telephone number shown below, or by fax at (505) 863–8324.

The addresses/locations for the public hearings are as follows:

- July 17, 5 p.m. Farmington Civic Center, 200 West Arrington, Farmington, NM.
- July 18, 10 a.m. Ute Mountain Casino, Towaoc, CO. US 491/160, 11 miles south of Cortez, CO.
- July 18, 5 p.m. Iron Horse Inn, 5800 North Main Avenue, Durango, CO.
- July 19, 1 p.m. Indian Pueblo Cultural Center, 2401 12th Street, NW. (1 block north of I–40), Albuquerque, NM.
- July 20, 1 p.m. Larrazolo Auditorium, Runnels Building, 1190 St. Francis Drive, Santa Fe, NM.
- July 23, 10 a.m. Shiprock Chapter House, Shiprock, NM. US 491, across from the Catholic Church.
- July 23, 5 p.m. Nenahnezad Chapter House, Fruitland, NM. From US 64, go south on County Road 6675, through the stoplight and across the San Juan River Bridge. Take the first road on the right past the bridge for approximately 0.5 miles to the Chapter House.
- July 24, 10 a.m. Burnham Chapter House. From US 491 between Shiprock and Gallup, NM, go east at Burnham Junction for 12 miles on N–5. The Chapter House is on the south side of the road.
- July 24, 5 p.m. Veterans Memorial Center, Sanostee Chapter Compound, Road N–34, Sanostee, NM.
- July 25, 10 a.m. Navajo Nation Museum, Hwy. 264 and Postal Loop Road, Window Rock, AZ.

FOR FURTHER INFORMATION CONTACT: Harrilene Yazzie, (505) 863–8287.

SUPPLEMENTARY INFORMATION:

Background on the Desert Rock Energy Project

The DEIS discloses probable environmental effects of the proposed Desert Rock Energy Project (or referred to herein as Desert Rock Energy Project or proposed project/action) and the Navajo Mine Extension Project (or referred to herein as the Navajo Mine Extension Project or Area IV North, Area IV South and Area V of the BHP Navajo Coal Company [BNCC] Lease Area).

The applicants, Sithe Global Power, LLC (Sithe) by and through the Desert Rock Energy Company, LLC, and Diné Power Authority (DPA), a Navajo Nation enterprise, are proposing to develop and construct the Desert Rock Energy Project. Desert Rock Energy Company, LLC, entered into an agreement with DPA to develop and construct a coal-fired power plant on the Navajo Reservation. Desert Rock Energy Company, LLC, is a privately held, independent power company and a limited liability corporation formed under the laws of the State of Delaware. DPA was established by the Navajo Nation Council to develop utility-scale energy projects on behalf of the Navajo Nation for the economic benefit of the Navajo people.

The proposed project involves the construction and operation of a coal-fired electrical power plant that would generate up to 1,500 megawatts (MW) of power; the extension of existing surface coal mining operations at the Navajo Mine to provide fuel for the power plant; disposal of coal combustion by-products (CCBs); and mine reclamation operations, with associated mine support facilities and activities. The proposed project would also include a water well field with supply pipeline to the power plant, transmission lines, a receiving electrical station, other upgrades and ancillary facilities required in the production and transmission of electricity, and new access roads.

The proposed project is located approximately 30 miles southwest of Farmington in San Juan County, New Mexico, and is entirely on Indian trust lands within the exterior boundaries of the Navajo Nation. The power plant would be constructed on a 592-acre parcel immediately adjacent on the west to Area IV North of the BNCC Lease Area. The coal fuel supply would be produced from Areas IV South and V of the BNCC Lease Area and transported by conveyor to a proposed coal preparation facility located in Area IV North of the BNCC lease area, near the power plant.

Purpose and Need for the Proposed Project

The purpose of the proposed action is to help meet the Navajo Nation's need to benefit economically from the development of its coal resources. Construction of the Desert Rock power plant would address this need, as well as regional power needs in general, by

- Supporting the Navajo Nation's objective for economic development by providing long-term employment opportunities and revenue cash-flow streams from the sale of Navajo natural resources (e.g., water, coal);
- using Navajo Nation coal to generate electricity;
- helping meet the demand for up to 2,000 MW of electrical power in the rapidly growing southwestern United States; and
- providing fuel diversity, hence a more economically stable and predictable power supply for utilities in the Southwest.

Proposed Federal Agency Actions

The proposed action includes several elements that require approvals, grants of rights-of-way, or permits by Federal agencies and the Navajo Nation. These are as follows:

- BIA–Approval of the long-term business land lease between DPA and the Navajo Nation, of the sublease between DPA and Desert Rock Energy Company, LLC, and of the rights-of-way requested for the proposed project.
- OSM–Approval of revisions to BNCC's current SMCRA permit to allow development of coal processing facilities, conveyance systems, and infrastructure in Area IV North of the BNCC Lease Area and approval of a future SMCRA permit application to allow coal mining, CCB disposal, and reclamation activities in Area IV South and Area V of the BNCC Lease Area.
- BLM–Approval of the Resource Recovery and Protection Plan or a Mine Plan of Operations for Area IV South and Area V of the BNCC Lease Area.
- USACE–Approval of an Individual Permit for the Desert Rock Energy Project under Section 404 of the Clean Water Act (CWA) and of Nationwide Permits or an Individual Permit under Section 404 of the CWA for the mining operations in Area IV South and Area V of the BNCC Lease Area.
- EPA–Approval of a significant revision to BNCC's National Pollutant Discharge Elimination System (NPDES) permit associated with the mining and reclamation operations and coal preparation facilities. Whether this constitute a new source permitting action subject to the National Environmental Policy Act is determined by criteria set forth in 40 CFR 122.29(b).
- Navajo Nation—The Navajo Nation's action, as a sovereign government and cooperating agency, is the approval of a land lease package that ensures economic development on tribal lands in compliance with the Navajo Nation Code and applicable Federal law.

The above approvals, taken together, constitute the Proposed Action, which consists of (1) the construction, operation, and maintenance of the Desert Rock Energy Project and associated water supply wells, water supply pipelines, transmission system interconnection, other facilities required for the generation and distribution of electrical power, and new access roads; and (2) the approval of surface coal mining, CCB disposal, and reclamation operations at the Navajo Mine Extension Project to supply coal to the Desert Rock power plant.

Public Meetings

Public meetings on the DEIS will include, (1) a presentation on the Desert Rock Energy Project and DEIS, (2) an area with displays where meeting attendees may discuss the project proposal and the EIS process with BIA and others, (3) an area where meeting attendees may record and submit written comments, and (4) an area where an BIA representative and a transcriber will record oral comments. To assist the transcriber and ensure an accurate record, BIA requests that each presenter of oral comments provide a written copy of his or her comments, if possible. A Navajo interpreter will be present at the meetings on the Navajo Indian Reservation.

If you are disabled or need special accommodations to attend one of the meetings, contact the person under the **FOR FURTHER INFORMATION CONTACT** section above at least one week before the meeting.

Public Comment Availability

Comments, including names and addresses of respondents, will be available for public review at the mailing address shown in the **ADDRESSES** section, during regular business hours, 8:00 a.m. to 4:30 p.m., Monday through Friday, except holidays. Individual respondents may request confidentiality. If you wish us to withhold your name and/or address from public review or from disclosure under the Freedom of Information Act, you must state this prominently at the beginning of your written comment. Such requests will be honored to the extent allowed by law. We will not, however, consider anonymous comments. All submissions from organizations or businesses, and from individuals identifying themselves as representatives or officials of organizations or businesses, will be made available for public inspection in their entirety.

Authority

This notice is published in accordance with section 1503.1 of the Council on Environmental Quality Regulations (40 CFR, parts 1500 through 1508) implementing the procedural requirements of the National Environmental Policy Act of 1969, as amended (42 U.S.C. 4321 *et. seq.*), and the Department of the Interior Manual (516 DM 1–6), and is in the exercise of authority delegated to the Assistant Secretary—Indian Affairs by 209 DM 8.

Willie R. Taylor,

Director,Office of Environmental Policy and Compliance.

[FR Doc. E7–11905 Filed 6–19–07; 8:45 am]

BILLING CODE 4310–W7–P

INTERNATIONAL TRADE COMMISSION

[Investigation No. DR–CAFTA–103–16]

Probable Economic Effect of Modifications to DR–CAFTA Rules of Origin and Tariffs for Certain Apparel Goods

AGENCY: United States International Trade Commission.

ACTION: Expansion of scope of investigation, revised deadline for filing written submissions.

SUMMARY: Following receipt of a request on June 1, 2007, from the United States Trade Representative (USTR), the Commission has expanded the scope of its investigation No. DR–CAFTA–103–16, Probable Economic Effect of Modifications to DR–CAFTA Rules of Origin and Tariffs for Certain Apparel Goods, to include advice on the probable economic effect of an additional set of proposed modifications to the rules of origin and tariff treatment that are contained in a revised letter of understanding with Costa Rica.

DATES: June 29, 2007: Extended deadline for filing written submissions.August 30, 2007: Revised date for transmittal of Commission report to USTR.

ADDRESSES: All Commission offices, including the Commission's hearing rooms, are located in the United States International Trade Commission Building, 500 E Street, SW.,

Washington, DC. All written submissions should be addressed to the Secretary, United States International Trade Commission, 500 E Street, SW., Washington, DC 20436. The public record for this investigation may be viewed on the Commission's electronic docket (EDIS) at *http://www.usitc.gov/secretary/edis.htm*

FOR FURTHER INFORMATION CONTACT: Laura Rodriguez, Office of Industries (202–205–3499; *laura.rodriguez@usitc.gov).* For information on legal aspects, contact William Gearhart of the Office of the General Counsel (202–205–3091; *william.gearhart@usitc.gov*). The media should contact Margaret O'Laughlin, Office of External Relations (202–205–1819; *margaret.olaughlin@usitc.gov*). Hearing-impaired individuals may obtain information on this matter by contacting the Commission's TDD terminal at 202–205–1810. General information concerning the Commission may also be obtained by accessing its Internet server (*http://www.usitc.gov*). Persons with mobility impairments who will need special assistance in gaining access to the Commission should contact the Office of the Secretary at 202–205–2000.

Background: The Annex to the USTR's June 1 letter identified an additional set of modifications for which advice is requested in a recently added section 6 of the Annex. The list can be viewed at *http://www.usitc.gov/secretary/edis.htm.* As requested, the Commission will transmit its advice to the USTR by August 30, 2007, and will issue a public version of its report shortly thereafter, with any confidential business information deleted.

The Commission's notice of institution of this investigation was published in the **Federal Register** of February 15, 2007 (72 FR 7455). The original deadline for the filing of written submissions was March 16, 2007, and the Commission was scheduled to transmit its advice on May 24, 2007. As indicated below, the deadline for written submissions has been extended to June 29, 2007, and those submissions should be limited to the following: (1) Information and arguments with respect to the modifications listed in section 6 of the Annex; and (2) with respect to the modifications listed in sections 1–5 of the Annex, information and arguments not available as of March 16, 2007. The Commission expects to transmit its report to the USTR by August 30, 2007. No public hearing was scheduled in the notice of investigation and none is planned in connection with the expanded scope of investigation.

Written Submissions: Persons with an interest in this matter are invited to submit written statements concerning the modifications to be addressed by the Commission in its expanded report on this investigation. Such submissions should be limited to the following: (1) information and arguments with respect to the modifications listed in section 6 of the Annex; and (2) with respect to the modifications listed in sections 1–5 of the Annex, information and arguments not available as of March 16, 2007. Submissions should be addressed to the Secretary to the Commission and should be submitted at the earliest practical date but no later than 5:15 p.m. on June 29, 2007. All written submissions must conform with section 201.8 of the Commission's Rules of Practice and Procedure (19 CFR 201.8). Section 201.8 of the rules requires that a signed original (or copy designated as an original) and fourteen (14) copies of each document be filed. In the event that confidential treatment of the document is requested, at least four (4) additional copies must be filed, in which the confidential business information must be deleted (see the following paragraph for further information regarding confidential business information). The Commission's rules do not authorize the filing of submissions with the Secretary by facsimile or electronic means, except to the extent permitted by section 201.8 of the rules (see Handbook for Electronic Filing Procedures, *http://www.usitc.gov/secretary/fed_reg_notices/rules/documents/handbook_on_electronic_filing.pdf*). Persons with questions regarding electronic filing should contact the Secretary (202–205–2000 or *http://www.usitc.gov/secretary/edis.htm*).

Any submissions that contain confidential business information must also conform with the requirements of section 201.6 of the Commission's Rules of Practice and Procedure (19 CFR 201.6). Section 201.6 of the rules requires that the cover of the document and the individual pages be clearly marked as to whether they are the ''confidential'' or ''nonconfidential'' version, and that the confidential business information be clearly identified by means of brackets. All written submissions, except for confidential business information, will be made available in the Office of the Secretary to the Commission for inspection by interested parties.

The Commission may include some or all of the confidential business information submitted in the course of this investigation in the report it sends to the USTR. The USTR has directed that the Commission, after transmitting its report, publish a public version of its report, with any confidential business information deleted. Accordingly, any confidential business information received by the Commission in this investigation and used in preparing the report will not be published in the public version of the report in a manner that would reveal the operations of the firm supplying the information.

By order of the Commission.

Issued: June 15, 2007.

Marilyn Abbott,

Secretary to the Commission.

[FR Doc. E7–11919 Filed 6–19–07; 8:45 am]

BILLING CODE 7020–02–P

INTERNATIONAL TRADE COMMISSION

[Inv. No. 337–TA–585]

In the Matter of Certain Engines, Components Thereof, and Products Containing the Same; Notice of Commission Determination Not To Review an Initial Determination Terminating the Investigation on the Basis of a Consent Order Stipulation and Consent Order

AGENCY: U.S. International Trade Commission.

ACTION: Notice.

SUMMARY: Notice is hereby given that the U.S. International Trade Commission has determined not to review an initial determination (''ID'') of the presiding administrative law judge (''ALJ'') (Order No. 17) in the above-captioned investigation terminating this investigation, as to both respondents, on the basis of a consent order stipulation and a consent order.

FOR FURTHER INFORMATION: Christal A. Sheppard, Esq., Office of the General Counsel, U.S. International Trade Commission, 500 E Street, SW., Washington, DC 20436, telephone 202–708–2301. Copies of the ID and all other nonconfidential documents filed in connection with this investigation are or will be available for inspection during official business hours (8:45 a.m. to 5:15 p.m.) in the Office of the Secretary, U.S. International Trade Commission, 500 E Street, SW., Washington, DC 20436, telephone 202–205–2000. Hearing-impaired persons are advised that information on this matter can be obtained by contacting the Commission's TDD terminal on 202–205–1810. General information concerning the Commission may also be obtained by accessing its Internet server (*http://www.usitc.gov*). The public

record for this investigation may be viewed on the Commission's electronic docket (EDIS) at *http://edis.usitc.gov.*

SUPPLEMENTARY INFORMATION: On October 19, 2006, the Commission instituted an investigation under section 337 of the Tariff Act of 1930, 19 U.S.C. 1337, based on a complaint filed by American Honda Motor Company, Inc. of Torrance, California (''Honda''), alleging a violation of section 337 in the importation, sale for importation, and sale within the United States after importation of certain engines, components thereof, and products containing the same by reason of infringement of certain claims of U.S. Patent Nos. 5,706,769 and 6,250,273. 71 FR 61799 (Oct. 19, 2006). The complainant named Wuxi Kipor Power Co., Ltd. of Jiangsu, China (''Wuxi'') as a respondent.

On January 24, 2007, the ALJ granted a motion by complainant Honda for leave to amend the complaint and the notice of investigation to add Wuxi Kama Power Co. Ltd. (''Kama'') as a respondent to the investigation. The Commission did not review that initial determination.

On May 15, 2007, Honda, Wuxi, and Kama filed a joint motion pursuant to Commission rule 210.21(c) seeking termination of this investigation based upon a consent order stipulation and a proposed consent order (copies attached). The proposed consent order would terminate the investigation in its entirety. The Commission investigative attorney supported the motion in a response dated May, 15, 2007.

On May 18, 2007, the ALJ issued the subject ID (Order No. 17) terminating this investigation pursuant to Commission rule 210.21(c)(1)(ii). He indicates in the ID that the consent order stipulations satisfy Commission rule 210.21(c)(3). The ALJ also considered, pursuant to Commission rule 210.21(c)(2)(ii) and 210.50(b)(2), the effect of the consent order ''upon the public health and welfare, competitive conditions in the U.S. economy, the production of like or directly competitive articles in the United States, and U.S. consumers.'' The ALJ found no adverse effect on the public interest. No petitions for review of the ID were filed and the Commission has determined not to review the ID.

The authority for the Commission's determination is contained in section 337 of the Tariff Act of 1930, as amended (19 U.S.C. 1337), and in §§ 210.21 and 210.42 of the Commission's Rules of Practice and Procedure (19 CFR 210.21 and 210.42).

By order of the Commission.

Issued: June 14, 2007.

Marilyn R. Abbott,

Secretary to the Commission.

[FR Doc. E7–11889 Filed 6–19–07; 8:45 am]

BILLING CODE 7020–02–P

INTERNATIONAL TRADE COMMISSION

[Investigation No. 337–TA–574]

In the Matter of Certain Equipment for Telecommunications or Data Communications Networks, Including Routers, Switches, and Hubs, and Components Thereof; Notice of Decision Not To Review an Initial Determination Granting Joint Motion for Termination of the Investigation as to Certain Respondents Based on a Settlement Agreement

AGENCY: U.S. International Trade Commission.

ACTION: Notice.

SUMMARY: Notice is hereby given that the U.S. International Trade Commission has determined not to review the presiding administrative law judge's (''ALJ'') initial determination (''ID'') (Order No. 27) granting the joint motion of complainant Telecordia Technologies, Inc. (''Telecordia'') and respondents Lucent Technologies, Inc., Alcatel U.S.A., Inc., and Alcatel S.A. to terminate the above captioned investigation with respect to those respondents based on a settlement agreement.

FOR FURTHER INFORMATION CONTACT: Eric Frahm, Office of the General Counsel, U.S. International Trade Commission, 500 E Street, SW., Washington, DC 20436, telephone (202) 205–3107. Copies of non-confidential documents filed in connection with this investigation are or will be available for inspection during official business hours (8:45 a.m. to 5:15 p.m.) in the Office of the Secretary, U.S. International Trade Commission, 500 E Street, SW., Washington, DC 20436, telephone (202) 205–2000. General information concerning the Commission may also be obtained by accessing its Internet server at *http://www.usitc.gov.* The public record for this investigation may be viewed on the Commission's electronic docket (EDIS) at *http://edis.usitc.gov.* Hearing-impaired persons are advised that information on this matter can be obtained by contacting the Commission's TDD terminal on (202) 205–1810.

SUPPLEMENTARY INFORMATION: This investigation was instituted on June 16, 2006, based on a complaint filed by Telecordia. The complaint alleged violations of section 337 of the Tariff Act of 1930 (19 U.S.C. 1337) in the importation into the United States, the sale for importation, and the sale within the United States after importation of certain equipment for telecommunications or data communications networks, including routers, switches, and hubs, and components thereof, by reason of infringement of certain claims of U.S. Patent No. 4,893,306; U.S. Patent No. Re. 36,633 (''the '633 patent''); and U.S. Patent No. 4,835,763. The amended complaint named five respondents: Lucent Technologies, Inc. of Murray Hill, New Jersey, Alcatel S.A. of France, Alcatel USA, Inc. of Plano, Texas (collectively, ''Lucent and Alcatel''); Cisco Systems, Inc. of San Jose, California; and PMC-Sierra, Inc. of Santa Clara, California. Only claims 11 and 33 of the '633 patent remain in the investigation.

On May 8, 2007, Telecordia and Lucent and Alcatel moved jointly to terminate the investigation with respect to Lucent and Alcatel, based on a settlement agreement. The Commission investigative attorney supported the motion.

On May 24, 2007, the ALJ issued an ID (Order No. 27) granting the joint motion to terminate the investigation with regard to Lucent and Alcatel. The ALJ found that the joint motion complied with the requirements of Commission Rule 210.21(b)(1) and that there was no evidence that the requested termination of the investigation will prejudice the public interest. Accordingly, the ALJ terminated the investigation as to Lucent and Alcatel. No petitions for review of the ID were filed. The Commission has determined not to review the ID.

The authority for the Commission's determination is contained in section 337 of the Tariff Act of 1930, as amended (19 U.S.C. 1337), and in section 210.42 of the Commission's Rules of Practice and Procedure (19 CFR 210.42).

By order of the Commission.

Issued: June 15, 2007.

Marilyn R. Abbott,

Secretary to the Commission.

[FR Doc. E7–11940 Filed 6–19–07; 8:45 am]

BILLING CODE 7020–02–P

DEPARTMENT OF JUSTICE

Drug Enforcement Administration

Manufacturer of Controlled Substances; Notice of Application

Pursuant to § 1301.33(a) of Title 21 of the Code of Federal Regulations (CFR), this is notice that on May 9, 2007, Cambrex Charles City, Inc., 1205 11th Street, Charles City, Iowa 50616, made application by letter to the Drug Enforcement Administration (DEA) to be registered as a bulk manufacturer of Oxycodone (9143), a basic class of controlled substance listed in schedule II.

The company plans to manufacture the listed controlled substance for sale to its customers.

Any other such applicant and any person who is presently registered with DEA to manufacture such a substance may file comments or objections to the issuance of the proposed registration pursuant to 21 CFR 1301.33(a).

Any such written comments or objections being sent via regular mail should be addressed, in quintuplicate, to the Drug Enforcement Administration, Office of Diversion Control, Federal Register Representative (ODL), Washington, DC 20537, or any being sent via express mail should be sent to Drug Enforcement Administration, Office of Diversion Control, Federal Register Representative (ODL), 2401 Jefferson Davis Highway, Alexandria, Virginia 22301; and must be filed no later than August 20, 2007.

Dated: June 7, 2007.

Joseph T. Rannazzisi,

Deputy Assistant Administrator, Office of Diversion Control, Drug Enforcement Administration.

[FR Doc. E7–11903 Filed 6–19–07; 8:45 am]

BILLING CODE 4410–09–P

DEPARTMENT OF JUSTICE

Drug Enforcement Administration

Manufacturer of Controlled Substances; Notice of Application

Pursuant to § 1301.33(a) of Title 21 of the Code of Federal Regulations (CFR), this is notice that on April 4, 2007, Cambrex Charles City, Inc., 1205 11th Street, Charles City, Iowa 50616, made application by letter to the Drug Enforcement Administration (DEA) to be registered as a bulk manufacturer of Lisdexamfetamine dimesylate (1205), a basic class of controlled substance listed in schedule II.

The company plans to manufacture the listed controlled substance for sale to its customer.

Any other such applicant and any person who is presently registered with DEA to manufacture such a substance may file comments or objections to the issuance of the proposed registration pursuant to 21 CFR 1301.33(a).

Any such written comments or objections being sent via regular mail should be addressed, in quintuplicate, to the Drug Enforcement Administration, Office of Diversion Control, Federal Register Representative (ODL), Washington, DC 20537, or any being sent via express mail should be sent to Drug Enforcement Administration, Office of Diversion Control, Federal Register Representative (ODL), 2401 Jefferson Davis Highway, Alexandria, Virginia 22301; and must be filed no later than August 20, 2007.

Dated: June 7, 2007.

Joseph T. Rannazzisi,

Deputy Assistant Administrator, Office of Diversion Control, Drug Enforcement Administration.

[FR Doc. E7–11904 Filed 6–19–07; 8:45 am]

BILLING CODE 4410–09–P

DEPARTMENT OF JUSTICE

Drug Enforcement Administration

Manufacturer of Controlled Substances; Notice of Registration

By Notice dated February 5, 2007, and published in the **Federal Register** on February 12, 2007, (72 FR 6578), Cambrex Charles City, Inc., 1205 11th Street, Charles City, Iowa 50616, made application by renewal to the Drug Enforcement Administration (DEA) to be registered as a bulk manufacturer of the basic classes of controlled substances listed in schedule II:

Drug	Schedule
Amphetamine (1100)	II
Methylphenidate (1724)	II
Phenylacetone (8501)	II
Dextropropoxyphene, bulk (non-dosage form) (9273).	II
Fentanyl (9801)	II

The company plans to manufacture the listed controlled substances in bulk for sales to its customers.

No comments or objections have been received. DEA has considered the factors in 21 U.S.C. 823(a) and determined that the registration of Cambrex Charles City, Inc. to manufacture the listed basic class of controlled substance is consistent with the public interest at this time. DEA has investigated Cambrex Charles City, Inc. to ensure that the company's registration is consistent with the public interest. The investigation has included inspection and testing of the company's physical security systems, verification of the company's compliance with state and local laws, and a review of the company's background and history. Therefore, pursuant to 21 U.S.C. 823, and in accordance with 21 CFR 1301.33, the above named company is granted registration as a bulk manufacturer of the basic classes of controlled substances listed.

Dated: June 7, 2007.

Joseph T. Rannazzisi,

Deputy Assistant Administrator, Office of Diversion Control,Drug Enforcement Administration.

[FR Doc. E7–11906 Filed 6–19–07; 8:45 am]

BILLING CODE 4410–09–P

DEPARTMENT OF JUSTICE

Drug Enforcement Administration

Manufacturer of Controlled Substances; Notice of Application

Pursuant to § 1301.33(a) of Title 21 of the Code of Federal Regulations (CFR), this is notice that on May 8, 2007, Cambrex Charles City, Inc., 1205 11th Street, Charles City, Iowa 50616, made application by letter to the Drug Enforcement Administration (DEA) to be registered as a bulk manufacturer of Hydromorphone (9150), a basic class of controlled substance listed in schedule II.

The company plans to manufacture the listed controlled substance for sale to its customers.

Any other such applicant and any person who is presently registered with DEA to manufacture such a substance may file comments or objections to the issuance of the proposed registration pursuant to 21 CFR 1301.33(a).

Any such written comments or objections being sent via regular mail should be addressed, in quintuplicate, to the Drug Enforcement Administration, Office of Diversion Control, Federal Register Representative (ODL), Washington, DC 20537, or any being sent via express mail should be sent to Drug Enforcement Administration, Office of Diversion Control, Federal Register Representative (ODL), 2401 Jefferson Davis Highway, Alexandria, Virginia 22301; and must be filed no later than August 20, 2007.

Dated: June 7, 2007.

Joseph T. Rannazzisi,

Deputy Assistant Administrator, Office of Diversion Control, Drug Enforcement Administration.

[FR Doc. E7–11910 Filed 6–19–07; 8:45 am]

BILLING CODE 4410–09–P

DEPARTMENT OF JUSTICE

Drug Enforcement Administration

Importer of Controlled Substances; Notice of Application

Pursuant to Title 21 Code of Federal Regulations 1301.34(a), this is notice that on April 23, 2007, Cambrex Charles City, Inc., 1205 11th Street, Charles City, Iowa 50616–3466, made application by letter to the Drug Enforcement Administration (DEA) for registration as an importer of the basic classes of controlled substances listed in schedules II:

Drug	Schedule
Thebaine (9333)	II
Raw Opium (9600)	II
Concentrate of Poppy Straw (9670).	II

The company plans to import the listed controlled substances for manufacture of active pharmaceutical ingredients for sale to its customers.

No comments, objections, or requests for any hearings will be received on any application for registration or re-registration to import crude opium, poppy straw, concentrate of poppy straw, and coca leaves.

Any bulk manufacturer who is presently, or is applying to be, registered with DEA to manufacture such basic classes of controlled substances listed in schedule I or II, which fall under the authority of section 1002(a)(2)(B) of the Act (21 U.S.C. 952(a)(2)(B)) may file comments or objections to the issuance of the proposed registration and may, at the same time, file a written request for a hearing on such application pursuant to 21 CFR 1301.43 and in such form as prescribed by 21 CFR 1316.47.

Any such comments or objections may be addressed, in quintuplicate, to the Drug Enforcement Administration, Office of Diversion Control, Federal Register Representative (ODL), Washington, DC 20537; or any being sent via express mail should be sent to Drug Enforcement Administration, Office of Diversion Control, Federal Register Representative (ODL), 2401 Jefferson-Davis Highway, Alexandria, Virginia 22301; and must be filed no later than July 20, 2007.

This procedure is to be conducted simultaneously with and independent of the procedures described in 21 CFR § 1301.34(b), (c), (d), (e) and (f). As noted in a previous notice published in the **Federal Register** on September 23, 1975, (40 FR 43745), all applicants for registration to import a basic class of any controlled substances in schedule I or II are and will continue to be required to demonstrate to the Deputy Assistant Administrator, Office of Diversion Control, Drug Enforcement Administration, that the requirements for such registration pursuant to 21 U.S.C. 958(a), 21 U.S.C. 823(a), and 21 CFR 1301.34(b), (c), (d), (e) and (f) are satisfied.

Dated: June 7, 2007.

Joseph T. Rannazzisi,

Deputy Assistant Administrator, Office of Diversion Control, Drug Enforcement Administration.

[FR Doc. E7–11915 Filed 6–19–07; 8:45 am]

BILLING CODE 4410–09–P

DEPARTMENT OF JUSTICE

Drug Enforcement Administration

Importer of Controlled Substances; Notice of Application

Pursuant to Title 21 Code of Federal Regulations 1301.34(a), this is notice that on May 16, 2006, Chattem Chemicals, Inc., 3801 St. Elmo Avenue, Building 18, Chattanooga, Tennessee 37409, made application by renewal to the Drug Enforcement Administration (DEA) for registration as an importer of the basic classes of controlled substances listed in schedule II:

Drug	Schedule
Methamphetamine (1105)	II
Phenylacetone (8501)	II
Raw Opium (9600)	II
Concentrate of Poppy Straw (9670).	II

The company plans to import the listed controlled substances to manufacture bulk controlled substances for sale to its customers.

No comments, objections, or requests for any hearings will be received on any application for registration or re-registration to import crude opium [Raw Opium (9600)], poppy straw, concentrate of poppy straw, and coca leaves.

Any bulk manufacturer who is presently, or is applying to be, registered with DEA to manufacture such basic classes of controlled substances listed in schedule I or II, which fall under the authority of section 1002(a)(2)(B) of the Act (21 U.S.C. 952(a)(2)(B) may file comments or objections to the issuance of the proposed registration and may, at the same time, file a written request for a hearing on such application pursuant to 21 CFR 1301.43 and in such form as prescribed by 21 CFR 1316.47.

Any such comments or objections may be addressed, in quintuplicate, to the Drug Enforcement Administration, Office of Diversion Control, Federal Register Representative (ODL), Washington, DC 20537; or any being sent via express mail should be sent to Drug Enforcement Administration, Office of Diversion Control, Federal Register Representative (ODL), 2401 Jefferson Davis Highway, Alexandria, Virginia 22301; and must be filed no later than July 20, 2007.

This procedure is to be conducted simultaneously with and independent of the procedures described in 21 CFR § 1301.34(b), (c), (d), (e) and (f). As noted in a previous notice published in the **Federal Register** on September 23, 1975, (40 FR 43745), all applicants for registration to import a basic class of any controlled substances in schedule I or II are and will continue to be required to demonstrate to the Deputy Assistant Administrator, Office of Diversion Control, Drug Enforcement Administration, that the requirements for such registration pursuant to 21 U.S.C. 958(a), 21 U.S.C. 823(a), and 21 CFR 1301.34(b), (c), (d), (e) and (f) are satisfied.

Dated: June 7, 2007.

Joseph T. Rannazzisi,

Deputy Assistant Administrator, Office of Diversion Control, Drug Enforcement Administration.

[FR Doc. E7–11914 Filed 6–19–07; 8:45 am]

BILLING CODE 4410–09–P

DEPARTMENT OF JUSTICE

Drug Enforcement Administration

Manufacturer of Controlled Substances; Notice of Registration

By Notice dated November 21, 2006, and published in the **Federal Register** on December 1, 2006, (71 FR 69593), Noramco Inc., 1440 Olympic Drive, Athens, Georgia 30601, made application by letter to the Drug Enforcement Administration (DEA) to be registered as a bulk manufacturer of Oxymorphone (9652), a basic class of controlled substance listed in schedule II.

The company plans to manufacture for in-house dosage form production and for sales to other dosage form manufacturers.

When the company first submitted their application, the company submitted information to DEA that the firm would be manufacturing Oxymorphone for in-house dosage form production and sales to other dosage form manufacturers. Upon further investigation by the DEA it was uncovered that the company would only be producing bulk material for dosage form manufacturers. DEA will grant this registration for the production of bulk manufacturing of Oxymorphone.

No comments or objections have been received. DEA has considered the factors in 21 U.S.C. 823(a) and determined that the registration of Noramco Inc. to manufacture the listed basic class of controlled substance is consistent with the public interest at this time. DEA has investigated Noramco Inc. to ensure that the company's registration is consistent with the public interest. The investigation has included inspection and testing of the company's physical security systems, verification of the company's compliance with state and local laws, and a review of the company's background and history. Therefore, pursuant to 21 U.S.C. 823, and in accordance with 21 CFR 1301.33, the above named company is granted registration as a bulk manufacturer of the basic class of controlled substance listed.

Dated: June 7, 2007.

Joseph T. Rannazzisi,

Deputy Assistant Administrator, Office of Diversion Control, Drug Enforcement Administration.

[FR Doc. E7–11916 Filed 6–19–07; 8:45 am]

BILLING CODE 4410–09–P

DEPARTMENT OF JUSTICE

Drug Enforcement Administration

Manufacturer of Controlled Substances; Notice of Registration

By Notice dated February 5, 2007, and published in the **Federal Register** on February 12, 2007, (72 FR 6579), Orasure Technologies, Inc., Lehigh University, Seeley G. Mudd-Building 6, 220 East First Street, Bethlehem, Pennsylvania 18015, made application by renewal to the Drug Enforcement Administration (DEA) to be registered as a bulk manufacturer of the basic classes of controlled substances listed in schedule I and II:

Drug	Schedule
Lysergic acid diethylamide (LSD) (7315).	I
4-Methoxyamphetamine (7411)	I
Normorphine (9313)	I
Tetrahydrocannabinols (THC) (7370).	I
Alphamethadol (9605)	I
Amphetamine (1100)	II
Methamphetamine (1105)	II
Cocaine (9041)	II
Hydromorphone (9150)	II
Benzoylecgonine (9180)	II
Hydrocodone (9193)	II
Morphine (9300)	II
Oxycodone (9143)	II
Meperidine (9230)	II
Methadone (9250)	II
Oxymorphone (9652)	II

The company plans to manufacture the listed controlled substances in bulk to manufacture controlled substance derivatives. These derivatives will be used in diagnostic products created specifically for internal use only.

No comments or objections have been received. DEA has considered the factors in 21 U.S.C. 823(a) and determined that the registration of Orasure Technologies, Inc. to manufacture the listed basic classes of controlled substances is consistent with the public interest at this time. DEA has investigated Orasure Technologies, Inc. to ensure that the company's registration is consistent with the public interest. The investigation has included inspection and testing of the company's physical security systems, verification of the company's compliance with state and local laws, and a review of the company's background and history. Therefore, pursuant to 21 U.S.C. 823, and in accordance with 21 CFR 1301.33, the above named company is granted registration as a bulk manufacturer of the basic classes of controlled substances listed.

Dated: June 7, 2007.

Joseph T. Rannazzisi,

Deputy Assistant Administrator,Office of Diversion Control, Drug Enforcement Administration.

[FR Doc. E7–11907 Filed 6–19–07; 8:45 am]

BILLING CODE 4410–09–P

DEPARTMENT OF JUSTICE

Drug Enforcement Administration

Importer of Controlled Substances; Notice of Registration

By Notice dated March 19, 2007 and published in the **Federal Register** on March 27, 2007, (72 FR 14297), Tocris Cookson, Inc., 16144 Westwoods Business Park, Ellisville, Missouri 63021–4500, made application by renewal to the Drug Enforcement Administration (DEA) to be registered as an importer of the basic classes of controlled substances listed in schedule I:

Drug	Schedule
Marihuana (7360)	I
Tetrahydrocannabinols (7370)	I

The company plans to import the above listed synthetic products for non-clinical laboratory based research only.

In reference to drug code 7360 (Marihuana), the company plans to import synthetic cannabidiol. In reference to drug code 7370 (Tetrahydrocannabinols), the company plans to import synthetic THC.

No other activity for this drug code is authorized for this registration.

No comments or objections have been received. DEA has considered the factors in 21 U.S.C. 823(a) and 952(a) and determined that the registration of Tocris Cookson, Inc. to import the basic classes of controlled substances is consistent with the public interest and with United States obligations under international treaties, conventions, or protocols in effect on May 1, 1971, at this time. DEA has investigated Tocris Cookson, Inc. to ensure that the company's registration is consistent with the public interest. The investigation has included inspection and testing of the company's physical security systems, verification of the company's compliance with state and local laws, and a review of the company's background and history. Therefore, pursuant to 21 U.S.C. 952(a) and 958(a), and in accordance with 21 CFR 1301.34, the above named company is granted registration as an importer of the basic classes of controlled substances listed.

Dated: June 7, 2007.

Joseph T. Rannazzisi,

Deputy Assistant Administrator, Office of Diversion Control,Drug Enforcement Administration.

[FR Doc. E7–11912 Filed 6–19–07; 8:45 am]

BILLING CODE 4410–09–P

DEPARTMENT OF LABOR

Office of the Secretary

Submission for OMB Review: Comment Request

June 13, 2007.

The Department of Labor (DOL) has submitted the following public information collection request (ICR) to

the Office of Management and Budget (OMB) for review and approval in accordance with the Paperwork Reduction Act of 1995 (Pub. L. 104–13, 44 U.S.C. chapter 35). A copy of this ICR, with applicable supporting documentation, may be obtained at *http://www.reginfo.gov/public/do/PRAMain,* or contact Ira Mills on 202–693–4122 (this is not a toll-free number) or e-mail: *Mills.Ira@dol.gov.*

Comments should be sent to the Office of Information and Regulatory Affairs, Attn: OMB Desk Officer for U.S. Department of Labor/Employment and Training Administration (ETA), Office of Management and Budget, Room 10235, Washington, DC 20503, 202–395–7316 (this is not a toll free number), within 30 days from the date of this publication in the **Federal Register**.

The OMB is particularly interested in comments which:

- Evaluate whether the proposed collection of information is necessary for the proper performance of the functions of the agency, including whether the information will have practical utility;
- Evaluate the accuracy of the agency's estimate of the burden of the proposed collection of information, including the validity of the methodology and assumptions used;
- Enhance the quality, utility and clarity of the information to be collected; and
- Minimize the burden of the collection of information on those who are to respond, including through the use of appropriate automated, electronic, mechanical, or other technological collection techniques or other forms of information technology, e.g., permitting electronic submission of responses.

Agency: Employment and Training Administration.

Type of Review: Extension of a currently approved collection.

Title: Confidentiality and Disclosure of State Unemployment Compensation.

OMB Number: 1205–0238.

Frequency: Quarterly.

Affected Public: State governments.

Type of Response: Reporting.

Number of Respondents: 53.

Annual Responses: 1,230,000.

Average Response Time: 1 minute.

Total Annual Burden Hours: 24,104.

Total Annualized Capital/Startup Costs: $0.

Total Annual Costs (operating/maintaining systems or purchasing services): $862,200.

Description: The Employment and Training Administration (ETA) of the Department of Labor has issued the final rule on the confidentiality and disclosure of information in records compiled or maintained by the States for purposes of the Federal-State unemployment compensation program. The proposed rule modifies and expands the regulations implementing the Income and Eligibility Verification System (IEVS) established by the Deficit Reduction Act of 1984.

Ira L. Mills,

Departmental Clearance Officer/Team Leader.

[FR Doc. E7–11827 Filed 6–19–07; 8:45 am]

BILLING CODE 4510–FW–P

DEPARTMENT OF LABOR

Employee Benefits Security Administration

Advisory Council on Employee Welfare and Pension Benefit Plans; Working Group on Fiduciary Responsibilities Update and Revenue Sharing; Notice of Meeting

Pursuant to the authority contained in section 512 of the Employee Retirement Income Security Act of 1974 (ERISA), 29 U.S.C. 1142, the Working Group assigned by the Advisory Council on Employee Welfare and Pension Benefit Plans to study the issue of fiduciary responsibility and revenue sharing will hold an open public meeting on July 11, 2007.

The session will take place in C5310–room 1B, U.S. Department of Labor, 200 Constitution Avenue, NW., Washington, DC 20210. The purpose of the open meeting, which will run from 9:45 a.m. to approximately 5 p.m., with a one hour break for lunch, is for Working Group members to hear testimony from invited witnesses. The Working Group will study the implications of The Pension Protection Act of 2006 on multiemployer plans and their fiduciaries, and revenue sharing practices of defined contribution plans.

Organizations or members of the public wishing to submit a written statement pertaining to the topic may do so by submitting 25 copies on or before July 5, 2007 to Larry Good, Executive Secretary, ERISA Advisory Council, U.S. Department of Labor, Suite N–5623, 200 Constitution Avenue, NW., Washington, DC 20210. Statements also may be submitted electronically to *good.larry@dol.gov.* Statements received on or before July 5 will be included in the record of the meeting. Individuals or representatives of organizations wishing to address the Working Group should forward their requests to the Executive Secretary or telephone (202) 693–8668. Oral presentations will be limited to 20 minutes, time permitting, but an extended statement may be submitted for the record. Individuals with disabilities who need special accommodations should contact Larry Good by July 5 at the address indicated.

Signed at Washington, DC, this 14th day of June, 2007.

Bradford P. Campbell,

Acting Assistant Secretary,Employee Benefits Security Administration.

[FR Doc. E7–11895 Filed 6–19–07; 8:45 am]

BILLING CODE 4510–29–P

DEPARTMENT OF LABOR

Employee Benefits Security Administration

Advisory Council on Employee Welfare and Pension Benefit Plans; Working Group on Participant Benefit Statements; Notice of Meeting

Pursuant to the authority contained in Section 512 of the Employee Retirement Income Security Act of 1974 (ERISA), 29 U.S.C. 1142, the Working Group assigned by the Advisory Council on Employee Welfare and Pension Benefit Plans to study the issue of participant benefit statements will hold an open public meeting on July 12, 2007.

The session will take place in C5310-room 1B, U.S. Department of Labor, 200 Constitution Avenue, NW., Washington, DC 20210. The purpose of the open meeting, which will run from 9 a.m. to approximately 5 p.m., with a one hour break for lunch, is for Working Group members to hear testimony from invited witnesses. The Working Group will study benefit statement requirements of the Pension Protection Act of 2006.

Organizations or members of the public wishing to submit a written statement pertaining to the topic may do so by submitting 25 copies on or before July 5, 2007 to Larry Good, Executive Secretary, ERISA Advisory Council, U.S. Department of Labor, Suite N–5623, 200 Constitution Avenue, NW., Washington, DC 20210. Statements also may be submitted electronically to *good.larry@dol.gov.* Statements received on or before July 5 will be included in the record of the meeting. Individuals or representatives of organizations wishing to address the Working Group should forward their requests to the Executive Secretary or telephone (202) 693–8668. Oral presentations will be limited to 20 minutes, time permitting, but an extended statement may be submitted for the record. Individuals with disabilities who need special

accommodations should contact Larry Good by July 5 at the address indicated.

Signed at Washington, DC, this 14th day of June, 2007.

Bradford P. Campbell,

Acting Assistant Secretary, Employee Benefits Security Administration.

[FR Doc. E7–11893 Filed 6–19–07; 8:45 am]

BILLING CODE 4510–29–P

DEPARTMENT OF LABOR

Employee Benefits Security Administration

Advisory Council on Employee Welfare and Pension Benefit Plans; Working Group on Financial Literacy; Notice of Meeting

Pursuant to the authority contained in Section 512 of the Employee Retirement Income Security Act of 1974 (ERISA), 29 U.S.C. 1142, the Working Group assigned by the Advisory Council on Employee Welfare and Pension Benefit Plans to study the issue of financial literacy will hold an open public meeting on July 10, 2007.

The session will take place in C5310–room 1B, U.S. Department of Labor, 200 Constitution Avenue, NW., Washington, D.C. 20210. The purpose of the open meeting, which will run from 9 a.m. to approximately 5 p.m., with a one hour break for lunch, is for Working Group members to hear testimony from invited witnesses. The Working Group will study financial literacy and the role of employers in promoting it.

Organizations or members of the public wishing to submit a written statement pertaining to the topic may do so by submitting 25 copies on or before July 5, 2007 to Larry Good, Executive Secretary, ERISA Advisory Council, U.S. Department of Labor, Suite N–5623, 200 Constitution Avenue, NW., Washington, DC 20210. Statements also may be submitted electronically to *good.larry@dol.gov.* Statements received on or before July 5 will be included in the record of the meeting. Individuals or representatives of organizations wishing to address the Working Group should forward their requests to the Executive Secretary or telephone (202) 693–8668. Oral presentations will be limited to 20 minutes, time permitting, but an extended statement may be submitted for the record. Individuals with disabilities who need special accommodations should contact Larry Good by July 5 at the address indicated.

Signed at Washington, DC this 14th day of June, 2007.

Bradford P. Campbell,

Acting Assistant Secretary,Employee Benefits Security Administration.

[FR Doc. E7–11894 Filed 6–19–07; 8:45 am]

BILLING CODE 4510–29–P

DEPARTMENT OF LABOR

Employee Benefits Security Administration

Advisory Council on Employee Welfare and Pension Benefit Plans; 138th Full Council Meeting; Notice of Meeting

Pursuant to the authority contained in Section 512 of the Employee Retirement Income Security Act of 1974 (ERISA), 29 U.S.C. 1142, the 138th open meeting of the full Advisory Council on Employee Welfare and Pension Benefit Plans will be held on July 11, 2007.

The session will take place in C5310-room 1B, U.S. Department of Labor, 200 Constitution Avenue, NW., Washington, DC 20210. The purpose of the open meeting, which will run from 9 a.m. to approximately 9:45 a.m., is for members to be updated on activities of the Employee Benefits Security Administration and for chairs of this year's working groups to provide progress reports on their individual study topics.

Organizations or members of the public wishing to submit a written statement may do so by submitting 25 copies on or before July 3, 2007 to Larry Good, Executive Secretary, ERISA Advisory Council, U.S. Department of Labor, Suite N–5623, 200 Constitution Avenue, NW., Washington, DC 20210. Statements also may be submitted electronically to *good.larry@dol.gov.* Statements received on or before July 3 will be included in the record of the meeting. Individuals or representatives of organizations wishing to address the Working Group should forward their requests to the Executive Secretary or telephone (202) 693–8668. Oral presentations will be limited to 20 minutes, time permitting, but an extended statement may be submitted for the record. Individuals with disabilities who need special accommodations should contact Larry Good by July 3 at the address indicated.

Signed at Washington, DC, this 14th day of June, 2007.

Bradford P. Campbell,

Acting Assistant Secretary,Employee Benefits Security Administration.

[FR Doc. E7–11896 Filed 6–19–07; 8:45 am]

BILLING CODE 4510–29–P

DEPARTMENT OF LABOR

Employee Benefits Security Administration

Hearing on Computer Model Investment Advice Programs for IRAs

AGENCY: Employee Benefits Security Administration, U.S. Department of Labor.

ACTION: Notice of hearing.

SUMMARY: Notice is hereby given that the Department of Labor will hold a hearing regarding the feasibility of the application of computer model investment advice programs for Individual Retirement Accounts and similar types of plans.

DATES: The hearing will be held on July 31, 2007 beginning at 9:30 a.m., EST.

ADDRESSES: The hearing will be held at the U.S. Department of Labor, Rooms N–4437B, C and D, 200 Constitution Avenue, NW., Washington, DC 20210.

FOR FURTHER INFORMATION CONTACT: Chris Motta, Office of Exemption Determinations, Employee Benefits Security Administration, U.S. Department of Labor, telephone (202) 693–8540 (this is not a toll-free number).

SUPPLEMENTARY INFORMATION: Section 601(b) of the Pension Protection Act of 2006 (the PPA) (Pub. L. 109–280) amended section 4975 of the Internal Revenue Code of 1986 (the Code) to add an exemption from certain taxes imposed by the Code for the provision of ''investment advice'' to participants and beneficiaries of covered employee benefit plans, and certain related transactions, if the investment advice is provided under an ''eligible investment advice arrangement.'' [1] One such arrangement involves the use of a computer model which meets the requirements of the exemption.[2] The

[1] See Code section 4975(d)(17). The PPA also amended section 408 of the Employee Retirement Income Security Act of 1974 (ERISA) to add a parallel exemption from certain prohibited transaction restrictions of ERISA.

[2] See Code section 4975(f)(8)(C)(ii). The computer model must: (1) Apply generally accepted investment theories that take into account the historic returns of different asset classes over defined periods of time; (2) utilize relevant information about the participant, which may include age, life expectancy, retirement age, risk tolerance, other assets or sources of income, and preferences as to certain types of investments; (3) utilize prescribed objective criteria to provide asset allocation portfolios comprised of investment options available under the plan; (4) operate in a manner that is not biased in favor of investments offered by the fiduciary adviser or a person with a material affiliation or contractual relationship with the fiduciary adviser; and (5) take into account all investment options under the plan in specifying

Continued

PPA directed the Secretary of Labor, in consultation with the Secretary of the Treasury, to solicit information regarding the feasibility of the application of computer model investment advice programs to Individual Retirement Accounts and similar types of plans (hereinafter, collectively, IRAs).[3] The PPA further directed that the Secretary of Labor, in consultation with the Secretary of the Treasury, determine, based on the information received from the solicitation, whether there is any computer model investment advice program which may be utilized to provide investment advice to IRA beneficiaries, where such program: (1) Utilizes relevant information about the account beneficiary, which may include age, life expectancy, retirement age, risk tolerance, other assets or sources of income, and preferences as to certain types of investments; (2) takes into account the full range of investments, including equities and bonds, in determining the options for the investment portfolios of the beneficiary; and (3) allows the beneficiary, in directing the investment, sufficient flexibility in obtaining advice to evaluate and select investment options[0].

On December 4, 2006, the Department of Labor published a request for information (RFI) regarding the feasibility of computer model investment advice programs for IRAs (71 FR 70427). On December 12 and 13, 2006, the Department solicited comments, by mail, from certain trustees and other persons offering computer model investment advice programs. The Department received over 60 comments in response to these solicitations.

The RFI posed several questions that focused on the specific statutory requirements imposed by the PPA for computer model investment advice programs for beneficiaries of IRAs. Many of the comments took differing views as to the existence of such programs depending on the meaning of the term ''full range of investments'' in PPA section 601(b)(3)(B).

After carefully reviewing the information received to date, the Department has decided that it would be beneficial to solicit additional information by means of a public hearing. The Department is interested in obtaining information on all aspects of computer model based investment advice programs for IRAs that would help in making the required determination, including additional information relating to the questions posed in the RFI. In particular, the Department is interested in understanding what particular types of investments or asset classes a computer model program should take into account in order to provide appropriate advice to IRA beneficiaries. In addition, the Department seeks additional information on the manner in which such programs could operate without bias as to investments offered by the fiduciary advisor or an affiliate, if the particular advice program allocates IRA assets among only such investments.

The Department is also interested in knowing whether the scope of relief from ERISA's prohibited transaction provisions afforded by the statute is adequate to facilitate the use of computer-based programs for IRAs should the Department determine that such programs are feasible. Conversely, the Department seeks information concerning the scope of relief that would be necessary, and the conditions that would be appropriate, if it were necessary to issue the class exemption described in PPA section 601(b)(3)(C)(ii).

The hearing will be held on July 31, 2007 beginning at 9:30 a.m., EST, in Rooms N–4437 B, C and D at the U.S. Department of Labor, 200 Constitution Avenue, NW., Washington, DC. Any interested person who wishes to be assured of an opportunity to present oral comments at the hearing should submit by 3:30 p.m., EST, July 19, 2007: (1) A request to be heard; and (2) a copy of an outline of the topics to be discussed. To facilitate the receipt and processing of responses, EBSA encourages interested persons to submit their request and outline electronically either: (1) By e-mail to *e-OED@dol.gov;* or (2) by using the Federal eRulemaking portal at *http://www.regulations.gov* (follow the instructions for submission of comments), using docket number: EBSA–2007–0021. All requests and outlines submitted to the Department, including those submitted by e-mail, will be posted on *www.regulations.gov* in the above-referenced docket. Persons submitting requests and outlines electronically are encouraged not to submit paper copies. Persons interested in submitting written requests and outlines on paper should send or deliver their requests and outlines to the Office of Exemption Determinations, Employee Benefits Security Administration, Room N–5700, U.S. Department of Labor, 200 Constitution Avenue, NW., Washington, DC 20210, Attention: Computer Model Investment Advice Programs For IRAs—Hearing. The Department will prepare an agenda indicating the order of presentation of oral comments. In the absence of special circumstances, each commenter will be allotted fifteen minutes in which to complete his or her presentation. Information about the agenda will be posted on or after July 25, 2007 on *www.regulations.gov* in docket number: EBSA–2007–0021 or may be obtained by contacting Chris Motta, Office of Exemption Determinations, Employee Benefits Security Administration, U.S. Department of Labor, telephone (202) 693–8540 (this is not a toll-free number). Those individuals who make oral comments at the hearing should be prepared to answer questions regarding their comments. The hearing will be transcribed.

Signed at Washington, DC, this 14th day of June, 2007.

Ivan L. Strasfeld,

Director, Office of Exemption Determinations,Employee Benefits Security Administration,U.S. Department of Labor.

[FR Doc. E7–11885 Filed 6–19–07; 8:45 am]

BILLING CODE 4510–29–P

how a participant's account balance should be invested and not be inappropriately weighted with respect to any investment option.

[3] See PPA section 601(b)(3)(A)(i). These plans are: (1) An individual retirement account described in section 408(a) of the Code; (2) an individual retirement annuity described in section 408(b) of the Code; (3) an Archer MSA described in section 220(d) of the Code; (4) a health savings account described in section 223(d) of the Code; (5) a Coverdell education savings account described in Code section 530; or (6) a trust, plan, account, or annuity which, at any time, has been determined by the Secretary of the Treasury to be described in any preceding subparagraph of this paragraph [i.e.,(1) through (5) above].

DEPARTMENT OF LABOR

Employment and Training Administration

[TA–W–60,277]

Creative Engineered Products, Formerly Known as Carlisle Engineered Products, Belleville Division, a Subsidiary of the Reserve Group; Belleville, MI; Notice of Revised Determination on Remand

On April 20, 2007, the United States Court of International Trade (USCIT) granted the Department of Labor's request for voluntary remand in *Former Employees of Creative Engineering Products* v. *U.S. Secretary of Labor,* Court No. 07–00073. In accordance with Section 223 of the Trade Act of 1974, as amended (19 U.S.C. 2273), the Department of Labor (Department) herein presents the results of the remand investigation regarding workers' eligibility to apply for worker adjustment assistance.

On October 23, 2006, a company official filed a petition for Trade Adjustment Assistance (TAA) and Alternative Trade Adjustment Assistance (ATAA) on behalf of workers and former workers of Creative Engineering Products, formerly known as Carlisle Engineering Products, Belleville Division, A Subsidiary of the Reserve Group, Belleville, Michigan (the subject firm). Workers produced plastic injection parts for the automotive industry. The subject firm shut down on October 31, 2006.

A negative determination regarding the subject worker group's eligibility to apply for TAA and ATAA was issued on December 6, 2006. The determination was based on the findings that, during the relevant period (the twelve-month period prior to the petition date), the subject firm did not shift production of plastic injection automotive parts (parts) abroad and that neither the subject firm nor its major declining customer imported parts during the relevant period. The Department's Notice of negative determination was published in the **Federal Register** on December 27, 2006 (71 FR 77805).

By letter dated December 14, 2006, a company official requested administrative reconsideration by the Department. The request asserted that the subject firm's closure was caused by the major customer's decision to move its operations to Canada. By letter dated January 18, 2007, the Department dismissed the request for reconsideration, stating that the statute does not provide for TAA certification based on a customer's shift of production to Canada and that no information, new or previously-submitted, revealed that the subject firm shifted production of parts abroad or that there were increased imports of parts during the relevant period. The Department's Dismissal of Application for Reconsideration was issued on January 24, 2007. The Notice of the Department's action was published in the **Federal Register** on February 2, 2007 (72 FR 5085).

By letter dated February 15, 2007, a worker requested judicial review by the USCIT. In the complaint, the Plaintiff alleges that the Department's denial, based on a finding of negligible imports by the subject firm, was arbitrary.

Since the petition was filed by the subject firm and the subject firm requested reconsideration, it was reasonable for the Department to believe that the subject firm had the workers' best interest at heart, and provided accurate and complete information in the previous investigations. However, because it is the Department's practice to view facts in the light most beneficial to the workers, it is possible that there was a misunderstanding and the workers were unintentionally injured by the mistake(s).

Therefore, in order to address the Plaintiff's allegation of increased imports and to determine whether the workers are eligible to apply for TAA, the Department requested voluntary remand. The Department's request was granted on April 20, 2007.

For a worker group to be certified for TAA based on increased imports, all of the following must be satisfied:

A. A significant number or proportion of the workers in such workers' firm, or an appropriate subdivision of the firm, have become totally or partially separated, or are threatened to become totally or partially separated;

B. The sales or production, or both, of such firm or subdivision have decreased absolutely; and

C. Increased imports of articles like or directly competitive with articles produced by such firm or subdivision have contributed importantly to such workers' separation or threat of separation and to the decline in sales or production of such firm or subdivision.

During the remand investigation, the Department contacted the company official to confirm the article produced by the subject worker group. The Department also conducted another survey to determine whether there were increased customer imports of articles like or directly competitive with plastic injection automotive parts produced at the subject firm during the relevant period. The remand investigation also included an industry-wide review of import trends.

Because the subject firm closed on October 31, 2006, the Department determines that, during the relevant period, a significant number or proportion of the workers in the subject firm have become totally separated and that subject firm sales and production have decreased absolutely.

The survey conducted during the remand investigation revealed that, during the relevant period, customer purchases from the subject firm decreased while imports increased. The survey also revealed overall decreased domestic purchases during the same period of increased import purchases. Further, the rate of import increase was higher than the rate of purchase decrease from the subject firm and other domestic sources.

During the relevant period, aggregate imports of articles like or directly competitive with plastic injection automotive parts produced by the subject firm increased.

Based on the findings of the remand investigation, the Department determines that increased imports of articles like or directly competitive with plastic injection automotive parts produced by the subject firm contributed importantly to the subject workers' separation and to the decline in subject firm sales and production.

In accordance with Section 246 the Trade Act of 1974 (26 U.S.C. 2813), as amended, the Department herein presents the results of its investigation regarding certification of eligibility to apply for ATAA. The Department has determined in this case that the group eligibility requirements of Section 246 have been met.

A significant number of workers at the firm are age 50 or over and possess skills that are not easily transferable. Competitive conditions within the industry are adverse.

Conclusion

After careful review of the information obtained during the remand investigation, I determine that increased imports of articles like or directly competitive with plastic injection automotive parts produced by the subject workers contributed to the total separation of a significant number or proportion of workers at the subject firm.

In accordance with the provisions of the Act, I make the following certification:

''All workers of Creative Engineering Products, formerly known as Carlisle Engineering Products, Belleville Division, A Subsidiary of the Reserve Group, Belleville, Michigan, who became totally or partially separated from employment on or after October 23, 2005, through two years from the issuance of this revised determination, are eligible to apply for Trade Adjustment Assistance under Section 223 of the Trade Act of 1974, and are eligible to apply for alternative trade adjustment assistance under Section 246 of the Trade Act of 1974.''

Signed at Washington, DC this 13th day of June 2007.

Richard Church,

Certifying Officer, Division of Trade Adjustment Assistance.

[FR Doc. E7–11833 Filed 6–19–07; 8:45 am]

BILLING CODE 4510–FN–P

DEPARTMENT OF LABOR

Employment and Training Administration

Investigations Regarding Certifications of Eligibility To Apply for Worker Adjustment Assistance and Alternative Trade Adjustment Assistance

Petitions have been filed with the Secretary of Labor under Section 221(a) of the Trade Act of 1974 (''the Act'') and are identified in the Appendix to this notice. Upon receipt of these petitions, the Director of the Division of Trade Adjustment Assistance, Employment and Training Administration, has instituted investigations pursuant to Section 221(a) of the Act.

The purpose of each of the investigations is to determine whether the workers are eligible to apply for adjustment assistance under Title II, Chapter 2, of the Act. The investigations will further relate, as appropriate, to the determination of the date on which total or partial separations began or threatened to begin and the subdivision of the firm involved.

The petitioners or any other persons showing a substantial interest in the subject matter of the investigations may request a public hearing, provided such request is filed in writing with the Director, Division of Trade Adjustment Assistance, at the address shown below, not later than June 20, 2007.

Interested persons are invited to submit written comments regarding the subject matter of the investigations to the Director, Division of Trade Adjustment Assistance, at the address shown below, not later than July 2, 2007.

The petitions filed in this case are available for inspection at the Office of the Director, Division of Trade Adjustment Assistance, Employment and Training Administration, U.S. Department of Labor, Room C–5311, 200 Constitution Avenue, NW., Washington, DC 20210.

Signed at Washington, DC, this 12th day of June 2007.

Ralph Dibattista,

Director,Division of Trade Adjustment Assistance.

APPENDIX—TAA

[Petitions instituted between 6/4/07 and 6/8/07]

TA-W	Subject firm (petitioners)	Location	Date of institution	Date of petition
61612	FCI USA Inc. (Comp)	Westland, MI	06/04/07	05/30/07
61613	Premier Manufacturing Support Services Inc. (AFLCIO)	Spring Hill, TN	06/04/07	06/01/07
61614	Penske Logistics, LLC (AFLCIO)	Spring Hill, TN	06/04/07	06/01/07
61615	American Food and Vending (AFLCIO)	Spring Hill, TN	06/04/07	06/01/07
61616	TDS Automotive Logistics (AFLCIO)	Mt. Pleasant, TN	06/04/07	06/01/07
61617	Ryder Integrated Logistics, Inc. (AFLCIO)	Spring Hill, TN	06/04/07	06/01/07
61618	Intier Seating Systems (AFLCIO)	Lewisberg, TN	06/04/07	06/01/07
61619	Amkor Technology (Comp)	Morrisville, NC	06/05/07	06/04/07
61620	EGS Easy Heat (Wkrs)	New Carlisle, TN	06/05/07	06/04/07
61621	DeRoyal Textiles (Comp)	Camden, SC	06/05/07	06/04/07
61622	ADP Leo Wolleman Inc. (Wkrs)	New York, NY	06/05/07	06/02/07
61623	Mahle, Inc. (Wkrs)	Holland, MI	06/05/07	06/04/07
61624	Lexington Home Brand, Plant 1 (Wkrs)	Thomasville, NC	06/06/07	05/24/07
61625	Performance Machine (State)	La Palma, CA	06/06/07	06/05/07
61626	Citizens Gas & Coke Utility (Wkrs)	Indianapolis, IN	06/06/07	06/05/07
61627	Kimberly Clark Corporation (Wkrs)	Corinth, MS	06/06/07	05/31/07
61628	Walter Dimension Company (Comp)	Jamestown, TN	06/06/07	06/05/07
61629	Cooper Tools (UAW)	Dayton, OH	06/06/07	05/18/07
61630	Qwest Services Corporation (Wkrs)	Idaho Falls, ID	06/06/07	06/04/07
61631	Interconnect Technologies (Comp)	Springfield, MO	06/06/07	06/01/07
61632	Lear Idea Center (State)	Madison, MI	06/06/07	05/29/07
61633	Worldwide Apparel Resources (State)	Carteret, NJ	06/06/07	06/05/07
61634	Corsair Memory (State)	Fremont, CA	06/06/07	05/30/07
61635	Sunset Manufacturing Company (State)	Tualatin, OR	06/06/07	05/31/07
61636	Bethleon Togs, Inc. (UNITE)	Bethlehem, PA	06/06/07	06/01/07
61637	VyTech Industries, Inc. (State)	Elkhart, IN	06/06/07	06/05/07
61638	Belcher Corporation LLC (Wkrs)	So. Easton, MA	06/06/07	05/25/07
61639	Hydro aluminum (State)	Ellenville, NY	06/06/07	05/30/07
61640	Carrier Access Corporation (Comp)	Tulsa, OK	06/07/07	06/05/07
61641	Coresource (State)	Jackson, MN	06/07/07	06/06/07
61642	Hutchinson Technology (State)	Hutchinson, MN	06/07/07	06/06/07
61643	Ashley Manor, Inc. (Comp)	High Point, NC	06/07/07	06/06/07
61644	John Deere Cylinder Mfg. (State)	Coon Rapids, MN	06/07/07	06/06/07
61645	Federal Mogul Corporation (IAMAW)	Schofield, WI	06/08/07	06/07/07
61646	Gip's Manufacturing Company (Comp)	Hartwell, GA	06/08/07	06/07/07
61647	Smurfit/Stone Corporation (State)	Teterboro, NJ	06/08/07	06/07/07
61648	Energy Conversion Systems (Comp)	Kane, PA	06/08/07	06/07/07
61649	Americ Disc DDL Georgia (State)	Madison, GA	06/08/07	06/07/07
61650	Mount Vernon Mills, Inc. (Comp)	McCormick, SC	06/08/07	06/07/07
61651	Springs Global US, Inc.—Sardis Plant (Comp)	Sardis, MS	06/08/07	06/07/07
61652	Bank of America—Foreign Ex. Dept. (Wkrs)	Concord, CA	06/08/07	05/07/07
61653	Aviza Technology (State)	Scotts Valley, CA	06/08/07	06/07/07
61654	Nortel Networks (Wkrs)	Richardson, TX	06/08/07	06/07/07

[FR Doc. E7–11832 Filed 6–19–07; 8:45 am]

BILLING CODE 4510–FN–P

DEPARTMENT OF LABOR

Employment and Training Administration

[TA–W–61,457]

Featherlite, Inc. Shenandoah, IA; Notice of Termination of Investigation

Pursuant to Section 221 of the Trade Act of 1974, as amended, an investigation was initiated on May 7, 2007 in response to a petition filed by a company official on behalf of workers at Featherlite, Inc., Shenandoah, Iowa. The workers at the subject facility produce steel trailers.

The petitioner has requested that the petition be withdrawn. Consequently, the investigation has been terminated.

Signed in Washington, DC. this 13th day of June 2007.

Richard Church,

Certifying Officer,Division of Trade Adjustment Assistance.

[FR Doc. E7–11831 Filed 6–19–07; 8:45 am]

BILLING CODE 4510–FN–P

DEPARTMENT OF LABOR

Employment and Training Administration

[TA–W–60,825]

Golden Ratio Woodworks; Emigrant, MT; Notice of Affirmative Determination Regarding Application for Reconsideration

On May 27, 2007, the U.S. Department of Labor (Department) received a request for administrative reconsideration of the Department's Notice of Negative Determination Regarding Eligibility to Apply for Worker Adjustment Assistance, applicable to workers and former workers of the subject firm. The negative determination was issued on May 1, 2007. On May 17, 2007, the Department's Notice of Determination was published in the **Federal Register** (72 FR 27855). Workers produce massage tables, chairs, and accessories.

The negative determination was based on the Department's findings that the subject firm did not shift production abroad and that the subject firm's major declining customers' imports did not contribute importantly to workers' separations.

In the request for reconsideration, the workers alleged that increased subject firm imports and increased foreign competition contributed to workers' separations.

The Department has carefully reviewed the workers' request for reconsideration and has determined that the Department will conduct further investigation.

Conclusion

After careful review of the application, I conclude that the claim is of sufficient weight to justify reconsideration of the U.S. Department of Labor's prior decision. The application is, therefore, granted.

Signed at Washington, DC, this 11th day of June 2007.

Richard Church,

Certifying Officer,Division of Trade Adjustment Assistance.

[FR Doc. E7–11835 Filed 6–19–07; 8:45 am]

BILLING CODE 4510–FN–P

DEPARTMENT OF LABOR

Employment and Training Administration

[TA–W–61,094]

Pine River Plastics, Inc. Including On-Site Leased Workers from Kelly Services, Manpower and Pinnacle StaffingSt. Clair, Michigan; Amended Certification Regarding Eligibility to Apply for Worker Adjustment Assistance and Alternative Trade Adjustment Assistance

In accordance with Section 223 of the Trade Act of 1974 (19 U.S.C. 2273), and Section 246 of the Trade Act of 1974 (26 U.S.C. 2813), as amended, the Department of Labor issued a Certification of Eligibility to Apply for Worker Adjustment Assistance and Alternative Trade Adjustment Assistance on April 23, 2007, applicable to workers of Pine River Plastics, Inc., St. Clair, Michigan. The notice was published in the **Federal Register** on May 9, 2007 (72 FR 26424).

At the request of a company official, the Department reviewed the certification for workers of the subject firm. The workers were engaged in the production of plastic injection molded parts.

The review of the investigation file shows that the Department inadvertently omitted the leased workers from Kelly Services, Manpower and Pinnacle Staffing who were engaged in employment related to the production on-site at the St. Clair, Michigan location of Pine River Plastics, Inc.

Based on these findings, the Department is amending this certification to include leased workers of Kelly Services, Manpower and Pinnacle Staffing working on-site at Pine River Plastics, Inc., St. Clair, Michigan.

The intent of the Department's certification is to include all workers employed at Pine River Plastics, St. Clair, Michigan who were adversely affected by increased imports.

The amended notice applicable to TA–W–61,094 is hereby issued as follows:

''All workers of Pine River Plastics, Inc., including on-site leased workers of Kelly Services, Manpower and Pinnacle Staffing, St. Clair, Michigan, who became totally or partially separated from employment on or after March 9, 2006, through April 23, 2009, are eligible to apply for adjustment assistance under Section 223 of the Trade Act of 1974, and are also eligible to apply for alternative trade adjustment assistance under Section 246 of the Trade Act of 1974.''

Linda G. Poole,

Certifying Officer, Division of Trade Adjustment Assistance.

[FR Doc. E7–11836 Filed 6–19–07; 8:45 am]

BILLING CODE 4510–FN–P

DEPARTMENT OF LABOR

Employment and Training Administration

[TA–W–60,734]

Primary Staffing Services, Inc. Workers Employed at Pearson Artworks a Division of Pearson Education, Inc.York, PA; Notice of Negative Determination on Reconsideration

On May 4, 2007, the Department issued an Affirmative Determination Regarding Application for Reconsideration for the workers and former workers of the subject firm. The notice was published in the **Federal Register** on May 11, 2007 (72 FR 26848–26849).

The petition for the workers of Primary Staffing Services, Inc. employed at Pearson Artworks, a division of Pearson Education, Inc., York, Pennsylvania engaged in computer entry, project management, status communication, file delivery, and quality assurance activities related to the production of WEB based line art illustrations was denied because imports of WEB based line art illustrations did not contribute importantly to worker separations at the subject firm and no shift of production to a foreign source occurred.

The petitioner filed a request for reconsideration in which the petitioner alleged that Pearson Artworks shifted

the production of textbook illustrations from York, Pennsylvania to Canada, thus causing separations of workers from the subject firm.

A company official was contacted for clarification in regard of a shift in production to Canada. The official stated that there was no shift in production of textbook illustration functions from Pearson Education, Inc., York, Pennsylvania to Canada in 2006 and January of 2007. The official emphasized that the reason of decreasing production of textbook illustrations at the facility in York, Pennsylvania lies behind ''an overall business strategy'' of Pearson Artworks to shift its focus away from volume illustrations to more of a research and development model.

The petitioner also disagreed with the previous findings that ''worker separation at the subject firm was due to a change from manual to automated work processes and not to imports or shift in production'' and alleged that ''no new automated processes were implemented during the course of workers employment that would eliminate their services.''

The company official informed that contrary to petitioners' statements, the workers of the Primary Staffing Services, Inc. were no longer needed because Pearson Education, York, Pennsylvania ''developed internal process that streamlined the workflow, thus decreasing the number of employees needed to perform the tasks of the Company's operations in its York office.'' In particular, the official clarified that these new processes included Manuscript Maker, which automates the creation of art manuscript and visual assets database, Proof Maker and Correction script, which provide automated art proofs and corrections, Media and new automated shipping methods via FedEx and UPS installed computers.

The investigation on reconsideration supported the findings that imports of WEB based line art illustrations did not contribute importantly to worker separations at the subject firm and no shift of production to a foreign source occurred.

Conclusion

After reconsideration, I affirm the original notice of negative determination of eligibility to apply for worker adjustment assistance for workers and former workers of Primary Staffing Services, Inc., workers employed at Pearson Artworks, a division of Pearson Education, Inc., York, Pennsylvania.

Signed at Washington, DC this 8th day of June, 2007.

Linda G. Poole,

Certifying Officer,Division of Trade Adjustment Assistance.

[FR Doc. E7–11834 Filed 6–19–07; 8:45 am]

BILLING CODE 4510–FN–P

DEPARTMENT OF LABOR

Employment and Training Administration

[TA–W–61,254]

American & Efird, Inc., d/b/a Robison and Anton Textile Company, Fairview Division, Fairview, NJ; Amended Certification Regarding Eligibility To Apply for Worker Adjustment Assistance and Alternative Trade Adjustment Assistance

In accordance with Section 223 of the Trade Act of 1974 (19 U.S.C. 2273) the Department of Labor issued a Certification of Eligibility to Apply for Worker Adjustment Assistance and a Negative Determination Regarding Eligibility to Apply for Alternative Trade Adjustment Assistance on May 10, 2007, applicable to workers of American & Efird, Inc., d/b/a Robison Anton Textile Company, Fairview Division, Fairview, New Jersey. The notice was published in the **Federal Register** on May 24, 2007 (72 FR 29181).

At the request of a company official, the Department reviewed the certification for workers of the subject firm. The workers were engaged in the production of embroidery thread and yarn.

In a request for an amendment, the company provided sufficient information to confirm that the skills of the workers at the subject firm are not easily transferable in the local commuting area.

Information obtained also indicates that a significant number of workers of the subject firm are age 50 or over, workers have skills that are not easily transferable, and conditions in the industry are adverse. Review of this information shows that all eligibility criteria under Section 246 of the Trade Act of 1974 (26 U.S.C. 2813), as amended have been met.

Accordingly, the Department is amending the certification to reflect its finding.

The amended notice applicable to TA–W–61,254 is hereby issued as follows:

''All workers of American & Efird, Inc., d/b/a Robison Anton Textile Company, Fairview Division, Fairview, New Jersey, who became totally or partially separated from employment on or after April 5, 2006 through May 10, 2009, are eligible to apply for adjustment assistance under Section 223 of the Trade Act of 1974 and are also eligible to apply for Alternative Trade Adjustment Assistance under Section 246 of the Trade Act of 1974.''

Signed at Washington, DC, this 13th day of June 2007.

Richard Church,

Certifying Officer, Division of Trade Adjustment Assistance.

[FR Doc. E7–11838 Filed 6–19–07; 8:45 am]

BILLING CODE 4510–FN–P

DEPARTMENT OF LABOR

Employment and Training Administration

[TA–W–61,129]

Romar Textile Co., Inc.; Wampum, PA; Notice of Revised Determination on Reconsideration

On May 25, 2007, the Department issued an Affirmative Determination Regarding Application on Reconsideration applicable to workers and former workers of the subject firm. The notice was published in the **Federal Register** on June 7, 2007 (72 FR 31613).

The previous investigation initiated on March 16, 2007, resulted in a negative determination issued on March 29, 2007, was based on the finding that workers of the subject firm do not produce an article or support production of an article within the meaning of Section 222 of the Act. The denial notice was published in the **Federal Register** on April 10, 2007 (72 FR 17938).

In the request for reconsideration, the petitioner provided additional information regarding production at Romar Textile Co., Inc. Upon further contact with the company official, it was revealed that the subject facility supported production of pillow covers and dust ruffles in 2005 and January through May of 2006.

The investigation on reconsideration also revealed that Romar Textile Co., Inc., Wampum, Pennsylvania supplied pillow covers and dust ruffles to one customer. A survey of this declining customer revealed an absolute increase in imports of pillow covers and dust ruffles from 2004 to 2005 and in January through May of 2006 when compared with the same period in 2006. The imports accounted for a meaningful portion of the subject firm's lost sales or production.

In accordance with Section 246 the Trade Act of 1974 (26 U.S.C. 2813), as amended, the Department of Labor

herein presents the results of its investigation regarding certification of eligibility to apply for alternative trade adjustment assistance (ATAA) for older workers.

In order for the Department to issue a certification of eligibility to apply for ATAA, the group eligibility requirements of Section 246 of the Trade Act must be met. The Department has determined in this case that the requirements of Section 246 have been met.

A significant number of workers at the firm are age 50 or over and possess skills that are not easily transferable. Competitive conditions within the industry are adverse.

Conclusion

After careful review of the additional facts obtained on reconsideration, I conclude that increased imports of articles like or directly competitive with those produced at Romar Textile, Co., Inc., Wampum, Pennsylvania, contributed importantly to the declines in sales or production and to the total or partial separation of workers at the subject firm. In accordance with the provisions of the Act, I make the following certification:

''All workers of Romar Textile Co., Inc., Wampum, Pennsylvania, who became totally or partially separated from employment on or after March 13, 2006 through two years from the date of this certification, are eligible to apply for adjustment assistance under Section 223 of the Trade Act of 1974, and are eligible to apply for alternative trade adjustment assistance under Section 246 of the Trade Act of 1974.''

Signed in Washington, DC, this 12th day of June 2007.

Linda G. Poole,

Certifying Officer, Division of Trade Adjustment Assistance.

[FR Doc. E7–11837 Filed 6–19–07; 8:45 am]

BILLING CODE 4510–FN–P

DEPARTMENT OF LABOR

Employment and Training Administration

[TA-W–61,406]

Texas Instruments Kilby Fab,Dallas, TX; Notice of Termination of Investigation

Pursuant to Section 221 of the Trade Act of 1974, an investigation was initiated on May 1, 2007, in response to a petition filed on behalf of workers of Texas Instruments Kilby Fab, Dallas, Texas.

The petition has been deemed invalid. The workers filing the petition, residing in Texas and Connecticut, do not report to, nor are they employees of Texas Instruments Kilby Fab, Dallas, Texas. Consequently, further investigation in this case would serve no purpose, and the investigation has been terminated.

Signed in Washington, DC, this 11th day of June 2007.

Linda G. Poole,

Certifying Officer,Division of Trade Adjustment Assistance.

[FR Doc. E7–11839 Filed 6–19–07; 8:45 am]

BILLING CODE 4510–FN–P

DEPARTMENT OF LABOR

Employment Standards Administration

Proposed Collection; Comment Request

ACTION: Notice.

SUMMARY: The Department of Labor, as part of its continuing effort to reduce paperwork and respondent burden, conducts a preclearance consultation program to provide the general public and Federal agencies with an opportunity to comment on proposed and/or continuing collections of information in accordance with the Paperwork Reduction Act of 1995 (PRA95) [44 U.S.C. 3506(c)(2)(A)]. This program helps to ensure that requested data can be provided in the desired format, reporting burden (time and financial resources) is minimized, collection instruments are clearly understood, and the impact of collection requirements on respondents can be properly assessed. Currently, the Employment Standards Administration is soliciting comments concerning the proposed collection: Application for Approval of a Representative's Fee in Black Lung Claim Proceedings Conducted by the U.S. Department of Labor (CM–972).

A copy of the proposed information collection request can be obtained by contacting the office listed below in the addresses section of this Notice.

DATES: Written comments must be submitted to the office listed in the addresses section below on or before August 20, 2007.

ADDRESSES: Ms. Hazel M. Bell, U.S. Department of Labor, 200 Constitution Ave., NW., Room S–3201, Washington, DC 20210, telephone (202) 693–0418, fax (202) 693–1451, e-mail *bell.hazel@dol.gov.* Please use only one method of transmission for comments (mail, fax, or e-mail).

SUPPLEMENTARY INFORMATION:

I. Background

Individuals filing with the U.S. Department of Labor, Office of Workers' Compensation Programs (OWCP), Division of Coal Mine Workers' Compensation (DCMWC) for benefits under the Black Lung Benefits Act (BLBA) may elect to be represented or assisted by an attorney or other representative. For those cases that are approved, 30 U.S.C. 901 of the Black Lung Benefits Act and 20 CFR 725.365–6 established standards for the information and documentation that must be submitted to the Program for review to approve a fee for services. The CM–972 is used to collect the pertinent data to determine if the representative's services and amounts charged can be paid under the Black Lung Act. This information collection is currently approved for use through November 30, 2007.

II. Review Focus

The Department of Labor is particularly interested in comments which:

- Evaluate whether the proposed collection of information is necessary for the proper performance of the functions of the agency, including whether the information will have practical utility;
- Evaluate the accuracy of the agency's estimate of the burden of the proposed collection of information, including the validity of the methodology and assumptions used;
- Enhance the quality, utility and clarity of the information to be collected; and
- Minimize the burden of the collection of information on those who are to respond, including through the use of appropriate automated, electronic, mechanical, or other technological collection techniques or other forms of information technology, e.g., permitting electronic submissions of responses.

III. Current Actions

The Department of Labor seeks the approval of this information in order to evaluate applications to approve fees for services rendered.

Type of Review: Extension.

Agency: Employment Standards Administration.

Title: Application for Approval of a Representative's Fee in a Black Lung Claim Proceedings Conducted by the U.S. Department of Labor.

OMB Number: 1215–0171.

Agency Number: CM–972.

Affected Public: Business or other for-profit.

Total Respondents: 285.
Total Annual Responses: 285.
Average Time per Response: 42 minutes.
Estimated Total Burden Hours: 200.
Frequency: On occasion.
Total Burden Cost (capital/startup): $0.
Total Burden Cost (operating/maintenance): $0.

Comments submitted in response to this notice will be summarized and/or included in the request for Office of Management and Budget approval of the information collection request; they will also become a matter of public record.

Dated: June 14, 2007.

Hazel Bell,

Acting Chief, Branch of Management Review and Internal Control,Division of Financial Management,Office of Management, Administration and Planning,Employment Standards Administration.

[FR Doc. E7–11886 Filed 6–19–07; 8:45 am]

BILLING CODE 4510–CK–P

DEPARTMENT OF LABOR

Employment Standards Administration

Office of Labor-Management Standards; Proposed Collection; Comment Request

ACTION: Notice.

SUMMARY: The Department of Labor, as part of its continuing effort to reduce paperwork and respondent burden, conducts a preclearance consultation program to provide the general public and Federal agencies with an opportunity to comment on proposed and/or continuing collections of information in accordance with the Paperwork Reduction Act of 1995 (PRA95) [44 U.S.C. 3506(c)(2)(A)]. This program helps to ensure that requested data can be provided in the desired format, reporting burden (time and financial resources) is minimized, collection instruments are clearly understood, and the impact of collection requirements on respondents can be properly assessed. Currently, the Employment Standards Administration is soliciting comments concerning the proposed extension of the collection of information requirements implementing Executive Order (EO) 13201—Notice of Employee Rights Concerning Payment of Union Dues or Fees. A copy of the proposed information collection request can be obtained by contacting the office listed below in the addresses section of this Notice.

DATES: Written comments must be submitted to the office listed in the addresses section below on or before August 20, 2007.

ADDRESSEE: Ms. Hazel M. Bell, U.S. Department of Labor, 200 Constitution Ave., NW., Room S–3201, Washington, DC 20210, telephone (202) 693–0418, fax (202) 693–1451, e-mail *bell.hazel@dol.gov.* Please use only one method of transmission for comments (mail, fax, or e-mail).

SUPPLEMENTARY INFORMATION:

I. Background

President George W. Bush signed Executive Order 13201 (EO 13201) on February 17, 2001 to require non-exempt Government contractors and subcontractors to post notices informing their employees that under Federal law those employees have certain rights related to union membership and use of union dues and fees. The Order also provides the text of contractual provisions that Federal Government contracting departments and agencies must include in every non-exempt Government contract. The contractual provisions require contractors to post a notice, informing employees that they cannot be required to join a union or maintain membership in a union as a condition of employment and that portion of dues or fees not used for collective bargaining, contract administration, and grievance adjustment may be refunded to the employee.

The Office of Labor-Management Standards (OLMS) administers the complaint and waiver request procedures of Executive Order 13201 pursuant to its implementing regulatory provisions (29 CFR part 470).

This information collection is currently approved for use through November 30, 2007.

II. Review Focus

The Department of Labor is particularly interested in comments which:

- Evaluate whether the proposed collection of information is necessary for the proper performance of the functions of the agency, including whether the information will have practical utility;
- evaluate the accuracy of the agency's estimate of the burden of the proposed collection of information, including the validity of the methodology and assumptions used;
- enhance the quality, utility and clarity of the information to be collected; and
- minimize the burden of the collection of information on those who are to respond, including through the use of appropriate automated, electronic, mechanical, or other technological collection techniques or other forms of information technology, e.g., permitting electronic submissions of responses.

III. Current Actions

The Department of Labor (DOL) seeks extension of approval to collect this information in order to carry out its responsibility to enforce Executive Order 13201. If this information collection is not conducted, Executive Order 13201 could not be enforced through the complaint procedure; contractors would not be able to avail themselves of the process for obtaining a waiver from the posting requirements in appropriate circumstances.

Type of Review: Extension.
Title: Notice of Employee Rights Concerning Payment of Union Dues or Fees.
OMB Number: 1215–0203.
Affected Public: Business or other for-profit, not-for-profit institutions, Federal Government.
Total Respondents: 30.
Total Responses: 30.
Average Time per Response: 6.1 hours.
Frequency: On occasion.
Estimated Total Burden Hours: 182.
Total Burden Cost (capital/startup): $0.
Total Burden Cost (operating/maintenance): $0.

Comments submitted in response to this notice will be summarized and/or included in the request for Office of Management andBudget approval of the information collection request; they will also become a matter of public record.

Dated: June 14, 2007.

Hazel Bell,

Acting Chief, Branch of Management Review and Internal Control, Division of Financial Management, Office of Management, Administration and Planning, Employment Standards Administration.

[FR Doc. E7–11887 Filed 6–19–07; 8:45 am]

BILLING CODE 4510–CP–P

DEPARTMENT OF LABOR

Employment Standards Administration

Proposed Collection; Comment Request

ACTION: Notice.

SUMMARY: The Department of Labor, as part of its continuing effort to reduce paperwork and respondent burden, conducts a preclearance consultation program to provide the general public and Federal agencies with an

opportunity to comment on proposed and/or continuing collections of information in accordance with the Paperwork Reduction Act of 1995 (PRA95) [44 U.S.C. 3506(c)(2)(A)]. This program helps to ensure that requested data can be provided in the desired format, reporting burden (time and financial resources) is minimized, collection instruments are clearly understood, and the impact of collection requirements on respondents can be properly assessed. Currently, the Employment Standards Administration is soliciting comments concerning the proposed collection: Application for Approval of a Representative's Fee in Black Lung Claim Proceedings Conducted by the U.S. Department of Labor (CM–972).

A copy of the proposed information collection request can be obtained by contacting the office listed below in the addresses section of this Notice.

DATES: Written comments must be submitted to the office listed in the **ADDRESSES** section below on or before August 20, 2007.

ADDRESSES: Ms. Hazel M. Bell, U.S. Department of Labor, 200 Constitution Ave., NW., Room S–3201, Washington, DC 20210, telephone (202) 693–0418, fax (202) 693–1451, e-mail *bell.hazel@dol.gov.* Please use only one method of transmission for comments (mail, fax, or e-mail).

SUPPLEMENTARY INFORMATION:

I. Background

Individuals filing with the U.S. Department of Labor, Office of Workers' Compensation Programs (OWCP), Division of Coal Mine Workers' Compensation (DCMWC) for benefits under the Black Lung Benefits Act (BLBA) may elect to be represented or assisted by an attorney or other representative. For those cases that are approved, 30 U.S.C. 901 of the Black Lung Benefits Act and 20 CFR 725.365–6 established standards for the information and documentation that must be submitted to the Program for review to approve a fee for services. The CM–972 is used to collect the pertinent data to determine if the representative's services and amounts charged can be paid under the Black Lung Act. This information collection is currently approved for use through November 30, 2007.

II. Review Focus

The Department of Labor is particularly interested in comments which:

- Evaluate whether the proposed collection of information is necessary for the proper performance of the functions of the agency, including whether the information will have practical utility;
- Evaluate the accuracy of the agency's estimate of the burden of the proposed collection of information, including the validity of the methodology and assumptions used;
- Enhance the quality, utility and clarity of the information to be collected; and
- Minimize the burden of the collection of information on those who are to respond, including through the use of appropriate automated, electronic, mechanical, or other technological collection techniques or other forms of information technology, e.g., permitting electronic submissions of responses.

III. Current Actions

The Department of Labor seeks the approval of this information in order to evaluate applications to approve fees for services rendered.

Type of Review: Extension.

Agency: Employment Standards Administration.

Title: Application for Approval of a Representative's Fee in a Black Lung Claim Proceedings Conducted by the U.S. Department of Labor.

OMB Number: 1215–0171.

Agency Number: CM–972.

Affected Public: Business or other for-profit.

Total Respondents: 285.

Total Annual Responses: 285.

Average Time per Response: 42 minutes.

Estimated Total Burden Hours: 200.

Frequency: On occasion.

Total Burden Cost (capital/startup): $0.

Total Burden Cost (operating/maintenance): $0.

Comments submitted in response to this notice will be summarized and/or included in the request for Office of Management and Budget approval of the information collection request; they will also become a matter of public record.

Dated: June 14, 2007.

Hazel Bell,

Acting Chief, Branch of Management Review and Internal Control,Division of Financial Management,Office of Management, Administration and Planning,Employment Standards Administration.

[FR Doc. E7–11892 Filed 6–19–07; 8:45 am]

BILLING CODE 4510–CK–P

OVERSEAS PRIVATE INVESTMENT CORPORATION

July 5, 2007, Public Hearing; Sunshine Act Meeting

TIME AND DATE: 2 p.m., Thursday, July 5, 2007.

PLACE: Offices of the Corporation, Twelfth Floor Board Room, 1100 New York Avenue, NW., Washington, DC.

STATUS: Hearing OPEN to the Public at 2 p.m.

PURPOSE: Public Hearing in conjunction with each meeting of OPIC's Board of DIrectors, to afford an opportunity for any person to present views regarding the activities of the Corporation.

PROCEDURES: Individuals wishing to address the hearing orally must provide advance notice to OPIC's Corporate Secretary no later than 5 p.m., Friday, June 29, 2007. The notice must include the individual's name, title, organization, address, and telephone number, and a concise summary of the subject matter to be presented.

Oral presentations may not exceed ten (10) minutes. The time for individual presentations may be reduced proportionately, if necessary, to afford all participants who have submitted a timely request to participate an opportunity to be heard.

Participants wishing to submit a written statement for the record must submit a copy of such statement to OPIC's Corporate Secretary no later than 5 p.m., Friday, June 29, 2007. Such statements must be typewritten, double-spaced, and may not exceed twenty-five (25) pages.

Upon receipt of the required notice, OPIC will prepare an agenda for the hearing identifying speakers, setting forth the subject on which each participate will speak, and the time allotted for each presentation. The agenda will be available at the hearing.

A written summary of the hearing will be compiled, and such summary will be made available, upon written request to OPIC's CorporateSecretary, at the cost of reproduction.

CONTACT PERSON FOR INFORMATION: Information on the hearing may be obtained from Connie M. Downs at (202) 336–8438, via facsimile at (202) 218–0136, or via e-mail at *cdown@opic.gov.*

June 18, 2007.

Connie M. Downs,

OPIC Corporate Secretary.

[FR Doc. 07–3057 Filed 6–18–07; 12:43 pm]

BILLING CODE 3210–01–M

RAILROAD RETIREMENT BOARD

Agency Forms Submitted for OMB Review, Request for Comments

Summary: In accordance with the Paperwork Reduction Act of 1995 (44 U.S.C. Chapter 35), the Railroad Retirement Board (RRB) is forwarding an Information Collection Request (ICR) to the Office of Information and Regulatory Affairs (OIRA), Office of Management and Budget (OMB) for the following collection of information: 3220–0136, Public Service Pension Questionnaires.

Public Law 95–216 amended the Social Security Act of 1977 by providing, in part, that spouse or survivor benefits may be reduced when the beneficiary is in receipt of a pension based on employment with a Federal, State, or local governmental unit. Initially, the reduction was equal to the full amount of the government pension.

Public Law 98–21 changed the reduction to two-thirds of the amount of the government pension. Public Law 108–203 amended the Social Security Act by changing the requirement for exemption to public service offset, that Federal Insurance Contributions Act (FICA) taxes be deducted from the public service wages for the last 60 months of public service employment, rather than just the last day of public service employment.

Sections 4(a)(1) and 4(f)(1) of the Railroad Retirement Act (RRA) provides that a spouse or survivor annuity should be equal in amount to what the annuitant would receive if entitled to a like benefit from the Social Security Administration. Therefore, the public service pension (PSP) provisions apply to RRA annuities.

RRB Regulations pertaining to the collection of evidence relating to public service pensions or worker's compensation paid to spouse or survivor applicants or annuitants are found in 20 CFR 219.64c.

Our ICR describes the information we seek to collect from the public. Completion of the forms is voluntary, failure to complete the forms could result in the nonpayment of benefits. One response is required from a respondent. Review and approval by OIRA ensures that we impose appropriate paperwork burdens.

The RRB invites comments on the proposed collection of information to determine (1) the practical utility of the collection; (2) the accuracy of the estimated burden of the collection; (3) ways to enhance the quality, utility and clarity of the information that is the subject of collection; and (4) ways to minimize the burden of collections on respondents, including the use of automated collection techniques or other forms of information technology. Comments to RRB or OIRA must contain the OMB control number of the ICR. For proper consideration of your comments, it is best if RRB and OIRA receive them within 30 days of publication date.

Previous Requests for Comments: The RRB has already published the initial 60-day notice (72 FR 14628 on March 28, 2007) required by 44 U.S.C. 3506(c)(2). That request elicited no comments.

Information Collection Request (ICR)

Title: Public Service Pension Questionnaires.

OMB Control Number: 3220–0136.

Form(s) submitted: G–208, Public Service Pension Questionnaire; G–212, Public Service Monitoring Questionnaire.

Type of request: No material or nonsubstantive change to a currently approved collection.

Affected public: Individuals or households.

Abstract: A spouse or survivor annuity under the Railroad Retirement Act may be subjected to a reduction for a public service pension. The questionnaires obtain information needed to determine if the reduction applies and the amount of such reduction.

Changes Proposed: The RRB proposes no changes to Form G–208 and minor, non-burden impacting editorial changes to Form G–212.

The burden estimate for the ICR is as follows:

Estimated annual number of respondents: 1,170.

Total annual responses: 1,170.

Total annual reporting hours: 294.

Additional Information or Comments: Copies of the forms and supporting documents can be obtained from Charles Mierzwa, the agency clearance officer (312–751–3363) or *Charles.Mierzwa@rrb.gov.*

Comments regarding the information collection should be addressed to Ronald J. Hodapp, Railroad Retirement Board, 844 North Rush Street, Chicago, Illinois 60611–2092 or *Ronald.Hodapp@rrb.gov* and to the OMB Desk Officer for the RRB, at the Office of Management and Budget, Room 10230, New Executive Office Building, Washington, DC 20503.

Charles Mierzwa,

Clearance Officer.

[FR Doc. E7–11922 Filed 6–19–07; 8:45 am]

BILLING CODE 7905–01–P

SECURITIES AND EXCHANGE COMMISSION

[Release No. 34–55912; File No. PCAOB–2007–02]

Public Company Accounting Oversight Board; Notice of Additional Solicitation of Comments on the Filing of Proposed Rule on Auditing Standard No. 5, An Audit of Internal Control Over Financial Reporting That Is Integrated With an Audit of Financial Statements, and Related Independence Rule and Conforming Amendments

June 15, 2007.

On June 12, 2007, the Commission published notice, pursuant to Section 107(b) of the Sarbanes-Oxley Act of 2002 (the ''Act''), that on May 25, 2007, the Public Company Accounting Oversight Board (the ''Board'' or the ''PCAOB'') filed with the Securities and Exchange Commission (the ''Commission'' or ''SEC'') the proposed rules relating to Auditing Standard No. 5 (''AS5''), *An Audit of Internal Control Over Financial Reporting That is Integrated with an Audit of Financial Statements;* a Related Independence Rule; and conforming amendments to the PCAOB's auditing standards.[1] The Commission published notice of these proposed rules to solicit comments on the proposed rules from interested persons. As stated in that notice, interested persons are invited to submit written data, views and arguments concerning the foregoing, including whether the proposed rules are consistent with the Act. The Commission is publishing this additional solicitation of comment to request specific comment on the following:

(1) Is the standard of materiality appropriately defined throughout AS5 to provide sufficient guidance to auditors? For example, is materiality appropriately incorporated into the guidance regarding the matters to be considered in planning an audit and the identification of significant accounts?

(2) Please comment on the requirement in Paragraph 80 that the auditor consider whether there are any deficiencies or combinations of deficiencies that are significant deficiencies and, if so, communicate those to the audit committee. Specifically, will the communication requirement regarding significant deficiencies divert auditors' attention away from material weaknesses?

(3) Is AS5 sufficiently clear that for purposes of evaluating identified

[1] *See* Exchange Act Release No. 34–55876 (June 7, 2007), 72 FR 32340 (June 12, 2007).

deficiencies, multiple control deficiencies should only be looked at in combination if they are related to one another?

(4) Please comment on whether the definition of ''material weakness'' in Paragraph A7 (which is consistent with the definition that the SEC adopted) appropriately describes the deficiencies that should prevent the auditor from finding that ICFR is effective.

(5) Is AS5 sufficiently clear about the extent to which auditors can use the work of others?

(6) Will AS5 reduce expected audit costs under Section 404, particularly for smaller public companies, to result in cost-effective, integrated audits?

(7) Does AS5 inappropriately discourage or restrict auditors from scaling audits, particularly for smaller public companies?

Comments may be submitted by any of the following methods:

Electronic Comments

- Use the Commission's Internet comment form(*http://www.sec.gov*); or
- Send an e-mail to *rule-comments@sec.gov.* Please include File Number PCAOB–2007–02 on the subject line.

Paper Comments

- Send paper comments in triplicate to Nancy M. Morris, Secretary, Securities and Exchange Commission, 100 F Street, NE., Washington, DC 20549–1090.

All submissions should refer to File No. PCAOB–2007–02. This file number should be included on the subject line if e-mail is used. To help process and review your comments more efficiently, please use only one method. The Commission will post all comments on the Commission's Internet Web site (*http://www.sec.gov/rules/pcaob*). Copies of the submission, all subsequent amendments, all written statements with respect to the proposed rule that are filed with the Commission, and all written communications relating to the proposed rule change between the Commission and any person, other than those that may be withheld from the public in accordance with the provisions of 5 U.S.C. 552, will be available for inspection and copying in the Commission's Public Reference Section, 100 F Street, NE., Washington, DC 20549. All comments received will be posted without change; we do not edit personal identifying information from submissions. You should submit only information that you wish to make available publicly. All submissions should refer to File Number PCAOB–2007–02. Comments should be submitted on or before July 12, 2007. The Commission intends to act on the proposed rule no later than July 27, 2007.

By the Commission.

Florence E. Harmon,

Deputy Secretary.

[FR Doc. E7–11935 Filed 6–19–07; 8:45 am]

BILLING CODE 8010–01–P

SECURITIES AND EXCHANGE COMMISSION

[Release No. 34–55907; File No. SR–BSE–2007–21]

Self-Regulatory Organizations; Boston Stock Exchange, Inc.; Notice of Filing of Proposed Rule Change To Amend the Existing Fee Schedule

June 13, 2007.

Pursuant to Section 19(b)(1) of the Securities Exchange Act of 1934 (''Act''),[1] and Rule 19b–4 thereunder,[2] notice is hereby given that on June 4, 2007, the Boston Stock Exchange (''BSE'' or ''Exchange'') filed with the Securities and Exchange Commission (''Commission'') the proposed rule change as described in Items I, II, and III below, which Items have been prepared substantially by the Exchange. The BSE has designated this proposal as one changing a due, fee, or other charge under Section 19(b)(3)(A)(ii) of the Act,[3] and Rule 19b–4(f)(2) thereunder,[4] which renders the proposal effective upon filing with the Commission. The Commission is publishing this notice to solicit comments on the proposed rule from interested persons.

I. Self-Regulatory Organization's Statement of the Terms of Substance of the Proposed Rule Change

The BSE proposes amending the certain transaction fees set forth in the BeX fee schedule as well as the BeX Revenue Sharing formula. The text of the proposed rule change is available on the Exchange's Web site (*http://www.bostonstock.com*), at the BSE, and at the Commission's Public Reference Room.

II. Self-Regulatory Organization's Statement of the Purpose of, and Statutory Basis for, the Proposed Rule Change

In its filing with the Commission, the BSE included statements concerning the purpose of and basis for the proposed rule change and discussed any comments it received on the proposed rule change. The text of these statements may be examined at the places specified in Item IV below. The Exchange has prepared summaries, set forth in Sections A, B, and C below, of the most significant aspects of such statements.

A. Self-Regulatory Organization's Statement of the Purpose of, and Statutory Basis for, the Proposed Rule Change

1. Purpose

The purpose of this filing is to amend certain transaction fees set forth in the Boston Equities Exchange (''BeX'') fee schedule as well as the BeX Revenue Sharing formula. The BeX fee schedule presently provides for uniform credits to Liquidity Providers in the amount of $.0027. In the event the trade involves a share price that is less than $1.00 Liquidity Providers are presently entitled to a credit in the amount of $.0027 per share with a maximum of .3% of quotation price per share. Additionally, the BeX Fee Schedule presently imposes a $.0028 charge on Liquidity Takers. In the event the trade involves a share price that is less than $1.00, Liquidity Takers are charged $.0028 with a maximum of .3% of quotation price per share. The purpose of this proposed amendment to the BeX fee schedule is to eliminate the credit presently available to Liquidity Providers. Additionally, this proposed amendment will lower the charge presently imposed on Liquidity Takers from $.0028 to $.0005. This proposed shift in the traditional economics of the existing marketplace will attract volume to BeX by encouraging those firms with a high percentage of taking order flow to make BeX their chosen routing destination while at the same time encouraging Liquidity Providers to provide competitive quotes on BeX with the higher probability of getting an execution.

In this filing, the Exchange also is proposing to amend the revenue sharing provision of the BeX fee schedule. Specifically, BSE is proposing to eliminate the current tape revenue sharing program for single sided orders. The tape revenue sharing program for cross trades will remain intact.

2. Statutory Basis

The Exchange believes that the proposal is consistent with the requirements of Section 6(b) of the Act,[5] in general, and furthers the objectives of Section 6(b)(4) of the Act,[6] in particular,

[1] 15 U.S.C. 78s(b)(1).

[2] 2 17 CFR 240.19b–4.

[3] 15 U.S.C. 78s(b)(3)(A)(ii).

[4] 17 CFR 240.19b–4(f)(2).

[5] 15 U.S.C. 78f(b).

[6] 15 U.S.C. 78f(b)(4).

in that it is designed to provide for the equitable allocation of reasonable dues, fees, and other charges among Exchange Members and issuers and other persons using Exchange facilities.

B. Self-Regulatory Organization's Statement on Burden on Competition

The Exchange does not believe that the proposed rule change will impose any burden on competition that is not necessary or appropriate in furtherance of the purposes of the Act.

C. Self-Regulatory Organization's Statement on Comments on the Proposed Rule Change Received From Members, Participants, or Others

The Exchange has neither solicited nor received comments on the proposed rule change.

III. Date of Effectiveness of the Proposed Rule Change and Timing for Commission Action

The foregoing proposed rule change has been designated as a fee change pursuant to Section 19(b)(3)(A) of the Act[7] and Rule 19b–4(f)(2) thereunder,[8] because it establishes or changes a due, fee or other charge imposed by the Exchange. Accordingly, the proposal will take effect upon filing with the Commission. At any time within 60 days of the filing of such rule change the Commission may summarily abrogate such rule change if it appears to the Commission that such action is necessary or appropriate in the public interest, for the protection of investors, or otherwise in furtherance of the purposes of the Act.

IV. Solicitation of Comments

Interested persons are invited to submit written data, views and arguments concerning the foregoing, including whether the proposed rule change is consistent with the Act. Comments may be submitted by any of the following methods:

Electronic Comments

- Use the Commission's Internet comment form *http://www.sec.gov/rules.sro.shtml*; or
- Send an e-mail to *rule-comments@sec.gov.* Please include File Number SR–BSE–2007–21 on the subject line.

Paper Comments

- Send paper comments in triplicate to Nancy M. Morris, Secretary, Securities and Exchange Commission, 100 F Street, NE., Washington, DC 20549–1090.

All submissions should refer to File No. SR–BSE–2007–21. This file number should be included on the subject line if e-mail is used. To help the Commission process and review your comments more efficiently, please use only one method. The Commission will post all comments on the Commission's Internet Web site (*http://www.sec.gov/rules.sro.shtml*). Copies of the submission, all subsequent amendments, all written statements with respect to the proposed rule change that are filed with the Commission, and all written communications relating to the proposed rule change between the Commission and any person, other than those that may be withheld from the public in accordance with the provisions of 5 U.S.C. 552, will be available for inspection and copying at the Commission's Public Reference Room. Copies of such filing will also be available for inspection and copying at the principal office of the BSE. All comments received will be posted without change; the Commission does not edit personal identifying information from submissions. You should submit only information that you wish to make available publicly. All submissions should refer to File Number SR–BSE–2007–21 and should be submitted on or before July 11, 2007.

For the Commission, by the Division of Market Regulation, pursuant to delegated authority.[9]

Florence E. Harmon,

Deputy Secretary.

[FR Doc. E7–11883 Filed 6–19–07; 8:45 am]

BILLING CODE 8010–01–P

[7] 15 U.S.C. 78s(b)(3)(A).

[8] 17 CFR 240.19b–4(f)(2).

[9] 17 CFR 200.30–3(a)(12).

SECURITIES AND EXCHANGE COMMISSION

[Release No. 34–55904; File No. SR–NYSE–2007–50]

Self-Regulatory Organizations; New York Stock Exchange LLC; Notice of Filing and Immediate Effectiveness of Proposed Rule Change To Extend Its Current Revenue Sharing Program for Its Specialists for an Additional Three Months

June 13, 2007.

Pursuant to Section 19(b)(1) of the Securities Exchange Act of 1934 (''Act''),[1] and Rule 19b–4 thereunder,[2] notice is hereby given that on May 31, 2007, the New York Stock Exchange LLC (''Exchange'' or ''NYSE'') filed with the Securities and Exchange Commission (''Commission'') the proposed rule change as described in Items I, II, and III below, which Items have been substantially prepared by the Exchange. The Commission is publishing this notice to solicit comments on the proposed rule change from interested persons.

I. Self-Regulatory Organization's Statement of the Terms of Substance of the Proposed Rule Change

The Exchange proposes to extend its current revenue sharing program for its specialists for an additional three months (through August 31, 2007).

II. Self-Regulatory Organization's Statement of the Purpose of, and Statutory Basis for, the Proposed Rule Change

In its filing with the Commission, the Exchange included statements concerning the purpose of, and basis for, the proposed rule change. The text of these statements may be examined at the places specified in Item IV below. The Exchange has prepared summaries, set forth in Sections A, B, and C below, of the most significant aspects of such statements.

A. Self-Regulatory Organization's Statement of the Purpose of, and Statutory Basis for, the Proposed Rule Change

1. Purpose

The Exchange proposes to extend for an additional three months its current revenue sharing program for its specialists. The revenue sharing program was instituted[3] in connection with the Exchange's adoption of Rule 104B,[4] which prohibits specialists from charging commissions. The Exchange established the revenue sharing program for a six-month period commencing December 1, 2006, in order to partially offset the specialists' loss of commission revenues. In its original filing, the Exchange stated that it intended to adopt a revised revenue sharing program commencing June 1, 2007, that would provide variable payments to the specialist firms depending on performance. The Exchange is not yet ready to put this revised revenue sharing program in place and, in the interim, proposes to extend the current revenue sharing program for an additional three months commencing June 1, 2007.

[1] 15 U.S.C. 78s(b)(1).

[2] 17 CFR 240.19b–4.

[3] *See* Securities Exchange Act Release No. 54856 (December 1, 2006), 71 FR 71215 (December 8, 2006) (SR–NYSE–2006–106).

[4] *See* Securities Exchange Act Release No. 54850 (November 30, 2006), 71 FR 71217 (December 8, 2006) (SR–NYSE–2006–105).

The Exchange will distribute a fixed amount of $26.5 million among the specialists for the three-month period commencing on June 1, 2007, to be paid in three monthly installments. The Exchange will allocate this fixed amount in proportion to the rebates each of the specialist firms would have received in October 2006 [5] if there had been a revenue sharing program in place utilizing the following two formulas:

(1) Each specialist firm would receive a rebate relating to that specialist firm's absolute market share for October 2006 in each of its specialty stocks if that market share exceeded 35%. A market share in a stock that was equal to or exceeded 35% would entitle a specialist to a rebate of (i) $15 for each percentage point above or equal to 35% up to and including 50%, (ii) $25 for each percentage point above 50% up to and including 65%, (iii) $35 for each percentage point above 65% up to and including 80%, and (iv) $45 for each percentage point above 80%. The following are examples of how this rebate would be paid:

- If Specialist X traded XYZ stock in which the Exchange had a 50% market share, it would receive $225 per month, which is 15 (*i.e.*, the number of percentage points above 35%) multiplied by $15.
- If Specialist X traded XYZ stock in which the Exchange had a 65% market share, it would receive $600 per month, which is 15 (*i.e.*, the number of percentage points above 35% up to and including 50%) multiplied by $15, plus 15 (*i.e.*, the number of percentage points above 50%) multiplied by $25.

(2) Each specialist firm would receive a volume-weighted rebate for every share traded in October 2006 in a stock in which the Exchange had a greater than 35% market share. If the Exchange had a market share:

- Equal to or greater than 35% up to and including 50%, the rebate would be $0.00013 per share.
- Greater than 50% up to and including 65%, the rebate would be $0.00014 per share.
- Greater than 65% up to and including 80%, the rebate would be $0.00015 per share.
- Greater than 80%, the rebate would be $0.00016 per share.

The following are examples of how the volume-weighted rebate would be paid:

- If Specialist X traded XYZ stock in which the Exchange had a 50% market share, it would receive a rebate of $0.00013 for every share traded above the 35% market share threshold.
- If Specialist X traded XYZ stock in which the Exchange had a 65% market share, it would receive a rebate of $0.00013 per share for every share traded above the 35% market share threshold up to and including a 50% market share and then would receive $0.00014 for every share above the 50% level.

The Exchange may alter the provisions of the revenue sharing program in the future in response to its experience with its application over time.[6]

2. Statutory Basis

The Exchange believes that the proposed rule change is consistent with the objectives of Section 6 of the Act [7] in general and furthers the objectives of Section 6(b)(4) [8] in particular, in that it is designed to provide for the equitable allocation of reasonable dues, fees, and other charges among its members and other persons using its facilities.

B. Self-Regulatory Organization's Statement on Burden on Competition

The Exchange does not believe that the proposed rule change will impose any burden on competition that is not necessary or appropriate in furtherance of the purposes of the Act.

C. Self-Regulatory Organization's Statement on Comments on the Proposed Rule Change Received From Members, Participants or Others

Written comments were neither solicited nor received.

III. Date of Effectiveness of the Proposed Rule Change and Timing for Commission Action

Because the foregoing proposed rule change establishes or changes a due, fee, or other charge imposed by the Exchange, it has become effective upon filing pursuant to Section 19(b)(3)(A) of the Act [9] and Rule 19b–(f)(2)[10] thereunder.

At any time within 60 days of the filing of the proposed rule change, the Commission may summarily abrogate such rule change if it appears to the Commission that such action is necessary or appropriate in the public interest, for the protection of investors, or otherwise in furtherance of the purposes of the Act.

IV. Solicitation of Comments

Interested persons are invited to submit written data, views, and arguments concerning the foregoing, including whether the proposed rule change is consistent with the Act. Comments may be submitted by any of the following methods:

Electronic Comments

- Use the Commission's Internet comment form (*http://www.sec.gov/rules/sro.shtml*); or
- Send an e-mail to *rule-comments@sec.gov.* Please include File Number SR–NYSE–2007–50 on the subject line.

Paper Comments

- Send paper comments in triplicate to Nancy M. Morris, Secretary, Securities and Exchange Commission, 100 F Street, NE., Washington, DC 20549–1090.

All submissions should refer to File Number SR–NYSE–2007–50. This file number should be included on the subject line if e-mail is used. To help the Commission process and review your comments more efficiently, please use only one method. The Commission will post all comments on the Commissions Internet Web site (*http://www.sec.gov/rules/sro.shtml*). Copies of the submission, all subsequent amendments, all written statements with respect to the proposed rule change that are filed with the Commission, and all written communications relating to the proposed rule change between the Commission and any person, other than those that may be withheld from the public in accordance with the provisions of 5 U.S.C. 552, will be available for inspection and copying in the Commission's Public Reference Room. Copies of such filing also will be available for inspection and copying at the principal office of the NYSE. All comments received will be posted without change; the Commission does not edit personal identifying information from submissions. You should submit only information that you wish to make available publicly. All submissions should refer to File Number SR–NYSE–2007–50 and should be submitted on or before July 11, 2007.

[5] The Exchange is using the specialist firms' performance in October 2006 as a basis for determining the amounts received by each firm because this was the period used for that purpose in connection with the initial six months of the revenue sharing program and the amount each specialist firm will receive each month will therefore remain unchanged.

[6] The Exchange will file a rule filing with the Commission pursuant to the Act and the rules thereunder in relation to any such changes prior to their implementation.

[7] 15 U.S.C. 78f.

[8] 15 U.S.C. 78f(b)(4).

[9] 15 U.S.C. 78s(b)(3)(A).

[10] 17 CFR 19b–(f)(2).

For the Commission, by the Division of Market Regulation, pursuant to delegated authority.[11]

Florence E. Harmon,

Deputy Secretary.

[FR Doc. E7–11884 Filed 6–19–07; 8:45 am]

BILLING CODE 8010–01–P

SECURITIES AND EXCHANGE COMMISSION

[Release No. 34–55908; File No. SR–NYSE–2007–51]

Self-Regulatory Organizations; New York Stock Exchange LLC; Notice of Filing and Immediate Effectiveness of Proposed Rule Change Relating to Rules 54 (''Dealings on Floor—Persons'') and 70 (''Bids and Offers'')

June 14, 2007.

Pursuant to Section 19(b)(1) of the Securities Exchange Act of 1934 (''Act'')[1] and Rule 19b–4 thereunder,[2] notice is hereby given that on June 8, 2007, the New York Stock Exchange LLC (''NYSE'' or the ''Exchange'') filed with the Securities and Exchange Commission (''Commission'') the proposed rule change as described in Items I and II below, which Items have been substantially prepared by the Exchange. The Exchange filed the proposed rule change pursuant to Section 19(b)(3)(A) of the Act[3] and Rule 19b–4(f)(6) thereunder, which renders it effective upon filing with the Commission.[4] The Commission is publishing this notice to solicit comments on the proposed rule change from interested persons.

I. Self-Regulatory Organization's Statement of the Terms of Substance of the Proposed Rule Change

The Exchange is proposing to amend Exchange Rules 54 (''Dealings on Floor—Persons'') and 70 (''Bids and Offers'') to allow a member organization to operate its booth premise on the Exchange Floor in a manner similar to a member organization's ''upstairs'' office, provided that the member organization has been approved to operate its booth in this manner by NYSE Regulation, Inc. (''NYSER''). The Exchange further proposes to make conforming amendments to Exchange Rules 6 (''Floor''), 112 (''Orders initiated Off the Floor''), 123 (''Records of Orders''), 132B (''Order Tracking Requirements''), and 134 (''Differences and Omissions-Cleared Transactions''). The text of the proposed rule change is available at the Exchange, the Commission's Public Reference Room, and *http://www.nyse.com.*

II. Self-Regulatory Organization's Statement of the Purpose of, and Statutory Basis for, the Proposed Rule Change

In its filing with the Commission, the Exchange included statements concerning the purpose of, and basis for, the proposed rule change and discussed any comments it received on the proposed rule change. The text of these statements may be examined at the places specified in Item IV below. The Exchange has prepared summaries, set forth in Sections A, B, and C below, of the most significant aspects of such statements.

A. Self-Regulatory Organization's Statement of the Purpose of, and Statutory Basis for, the Proposed Rule Change

1. Purpose

NYSE is proposing to amend Exchange Rules 54 (''Dealings on Floor—Persons'') and 70 (''Bids and Offers'') to allow a member organization to operate its booth premise on the Exchange Floor in a manner similar to a member organization's ''upstairs'' office, provided that the member organization has been approved to operate its booth in this manner by NYSER.

In this filing, the Exchange further proposes to make conforming amendments to Exchange Rules 6 (''Floor''), 112 (''Orders initiated Off the Floor''), 123 (''Records of Orders''), 132B (''Order Tracking Requirements''), and 134 (''Differences and Omissions-Cleared Transactions'').

Operation of an ''Upstairs'' Office From a Floor Member's Booth Premise. As a result of the changes in the way in which trading occurs on the Exchange (and in the securities markets in general) due to, among other things, Regulation National Market System (''Regulation NMS'') and the Exchange's operation of its Hybrid Market, the Exchange seeks to modify the Exchange rules that impede Floor broker member organizations from operating within its booth premises similar to a member organization's ''upstairs'' office.

Although there is no Exchange rule that specifically prohibits a Floor broker member organization from operating within its booth premise in a manner similar to its ''upstairs'' office,[5] the ability of a Floor broker member organization to operate its booth premises in this manner has been restricted by certain Exchange rules. For example, member organization staff operating out of such booth premises, who are not Exchange ''members'' are constrained in the way in which they are allowed to process orders sent to the booth, as Exchange Rule 54 limits the right to conduct business ''on the Floor'' to members.

The Exchange states that the impetus for the proposed amendment is the result of several factors. Competition from other market centers and the growth of alternative trading systems, coupled with increased internalization by broker-dealers, has challenged the dominance of the trading post as the centralized locus of the representation and execution of orders in a particular security. Recent statistics provide potent proof of this—there has been a 49% decrease in Floor broker share of total NYSE trading volume on the NYSE between the first quarter of 2006 and the first quarter of 2007. At the same time, the rapid dissemination of consolidated quote and trade information and real-time updates of the Exchange limit order book has increased exponentially the amount and accuracy of available information and the speed with which it is disseminated. These changes have not only impacted the way in which information is collected and processed, they have also increased competition for member organizations, which are continually searching for ways to provide more efficient and less costly service to their customers.

Therefore, the Exchange seeks to provide its Floor broker member organizations with the ability to access other markets[6] and trade a wider range of products from the Floor broker member organizations' booth premises

[11] 17 CFR 200.30–3(a)(12).

[1] 15 U.S.C. 78s(b)(1).

[2] 17 CFR 240.19b–4.

[3] 15 U.S.C. 78s(b)(3)(A).

[4] 17 CFR 240.19b–4(f)(6).

[5] For example, a member organization's upstairs office can, among other things, route orders in NYSE listed securities directly to another market.

[6] The Exchange previously expanded the ability of Floor broker member organizations, on a pilot basis, to transmit agency orders in Nasdaq Stock Market LLC (''Nasdaq'') and NYSE ARCA℠ listed securities, from the Exchange Floor, including booth premises, provided the member organization complies with certain requirements. These requirements include, among others, membership in the NASD (for Nasdaq-listed securities) or having NYSE ARCA equities trading permit (for NYSE ARCA-listed securities); receipt of the order on the NYSE Floor through a permissible communication device, and transmission of the order to the appropriate market through a non-NYSE order management system. *See* NYSE Information Memo 05–88 (November 10, 2005); NYSE Member Education Bulletin 2006–7 (March 22, 2006); NYSER Information Memos 06–37 (May 19, 2006) and 06–43 (June 15, 2006); and NYSER Member Education Bulletin 2006–12 (July 21, 2006).

located around the perimeters of the current Exchange Floor and lining the passageways connecting the rooms that comprise the Exchange Floor. The NYSE believes that this will provide Floor brokers with the ability to remain competitive in view of changes in the markets and the manner in which customer orders are handled and executed. Pursuant to the proposal, a Floor broker or appropriately registered and supervised booth staff would be able to transmit orders in NYSE-listed securities that they have received on the Exchange Floor to away markets for execution directly from its booth premises without having to send the order to an upstairs trading desk. The instant proposal will further allow member organizations to centralize these operations within their booth premises.

To remove the impediments to Floor broker member organization ability to efficiently operate its business from the Exchange Floor, the NYSE seeks to amend Exchange Rule 70 (''Bids and Offers'') to add Supplemental section .40. Proposed Exchange Rule 70.40 will allow member organizations approved to operate a booth premise to handle orders in all securities, including those listed on other markets from their approved booth premises. The proposed rule will also allow the member organizations' appropriately registered and supervised booth staff to handle orders in a similar manner as sales traders are permitted to operate in ''upstairs'' offices, subject to restrictions described below. As such, the Exchange seeks to make a corresponding amendment to Exchange Rule 54 in order to permit appropriately registered and supervised booth staff of member organizations operating out of an approved booth premise who are not ''members'' to process orders sent to the booth in the same manner that a sales trader in an ''upstairs office'' is allowed to process orders.

Since the booth premise will operate as an ''upstairs office,'' a member organization, consistent with the type of business activities it seeks to operate in its approved booth premise, will be required to comply with all applicable rules [7] governing the operation of a public business. The specific rules that will apply to the operation of an approved booth premise will depend on the type of business that NYSER has approved the member organization to operate. For example, a member organization that is approved to operate its business solely from a booth premise and only provide Exchange Floor executions for other member organizations would no longer be required to carry Fidelity Bonds pursuant to Exchange Rule 319. Moreover, pursuant to the proposed rule, a member organization is required to obtain approval from NYSER prior to implementing any changes in the operation of its approved booth premise.

Unlike the ''upstairs'' offices, member organizations approved to operate booth premises pursuant to proposed Exchange Rule 70.40 shall be prohibited from effecting any transaction for its own account, the account of an associated person, or an account with respect to which it or an associated person thereof exercises investment discretion from such approved booth premises.

In addition, proposed Exchange Rule 70.40 will require that member organizations operating approved booth premises in this manner must adopt and implement comprehensive written procedures and guidelines governing the conduct and supervision of business and staff at the booth, as well as a process for regular review of these procedures and guidelines and compliance therewith. These written procedures and guidelines and any changes thereto must be approved by NYSER prior to their implementation.

Exchange rules that govern trading on the Exchange Floor will continue to apply to member organizations on the Exchange Floor, including those member organizations operating within an approved booth premise. Member organizations that operate within an approved booth premises pursuant to the proposal will also be required to comply with all rules that govern upstairs activity. Through this filing, the Exchange seeks to amend Exchange Rule 123(e) to make clear that member organizations operating a booth premise that choose to route an order to the Exchange Floor for execution must, immediately upon receipt of the order and prior to representation and execution on the Exchange Floor or placement in an agency interest file within the Display Book system or routing the order to a Floor broker for execution at the post, enter such order into an electronic system on the Exchange Floor.[8]

The Exchange further seeks to amend Exchange Rule 123(b) and 132B(a)(1) to make clear that orders in NYSE-listed securities sent to or generated at a member organization's approved booth premise and routed to another market for execution must continue to comply with the requirements of NYSE Rule 132B (Order Tracking Requirements). For such orders, the provisions of Exchange Rule 123(b) shall not apply; rather, the provisions of the Exchange Rule 132B will apply to such orders.

Moreover, as it relates to any order initiated and/or routed from a member organization's booth premise operating pursuant to proposed Exchange Rule 70.40 for execution on another market center, the Exchange seeks to amend Exchange Rule 134(d) to make clear that member organizations are prohibited from processing errors related to transactions on another market center in its Exchange required error account. Member organizations continue to be required to maintain ''* * * an error account at a registered broker or dealer in his or her name, or in the name of his or her member organization; or (b) such member participates in an error account established for a group of members * * *.'' [9] Nevertheless error transactions processed in said error account must be limited solely to transactions executed on the Exchange Floor. Of course, member organizations must follow the applicable rules of the away market center related to error transactions.

Regulation of Approved Booth Premises. The proposed amendment envisions robust regulation of the staff and business conducted from booth premises by both the member organization and NYSER. For example, prior to operating booth premises in the manner permitted by the amended rule, a member organization must receive the approval of NYSER. In determining whether to grant such approval, member organizations will be required to provide NYSER with, among other things, detailed information regarding the proposed systems and order handling process, proof that all personnel are appropriately registered, proof of independent compliance personnel and proof of adequate supervisory controls.

Further, the member organization must adopt and implement comprehensive written procedures, which also must be approved by NYSER, in governing the conduct of its business and staff and must review compliance with these procedures on a regular basis. In addition, the same registration and supervisory requirements that apply to upstairs offices must be followed in the booth premises.

[7] Exchange rules applicable to the operation of a public business include, but are not limited to, Admission of Members (Exchange Rules 300–324) and Operation of Member Organizations (Exchange Rules 325–465).

[8] *See* Exchange Rule 123(e) (''FESC'').

[9] *See* Exchange Rule 134(d).

The Exchange expects member organizations to vigorously supervise compliance with these procedures. NYSER will also appropriately review compliance with these obligations and has the authority to enforce them through the disciplinary process as warranted.

NYSER will periodically examine the member organization's business conducted at its approved booth premise. Further, NYSER has the ability to examine the member organization's business conducted at such approved booth premise in the same manner as it has with respect to a firm's ''upstairs'' office. The review would include an examination to confirm that the member organization has in place adequate policies and procedures to reasonably prevent and detect, among other things, effecting proprietary transactions from its approved booth premises and ensure compliance by the member organization with the other related provisions of proposed Exchange Rule 70.40. NYSER further represents that its procedures are adequate to appropriately review compliance with all obligations delineated in proposed Exchange Rule 70.40, including the prohibition against proprietary trading, during its examination of the member organization's approved booth premise.

Conforming Amendments. Through this proposal, the Exchange further seeks to make certain conforming changes to Exchange rules. The Exchange proposes to amend Exchange Rule 6 (''Floor'') and Exchange Rules 112(b). Specifically, the Exchange proposes to amend the definition of ''Floor'' in Rule 6 and the corresponding definition of Floor contained in Exchange Rule 112(b) to properly reflect the physical locations that comprise the Exchange Floor. Thus, the Exchange proposes to amend these rules so that each will state that the Exchange Floor consists of the Exchange trading Floor and the premises immediately adjacent thereto, such as the various entrances and lobbies of the 11 Wall Street, 18 New Street, 8 Broad Street, 12 Broad Street and 18 Broad Street Buildings. The Exchange Floor will also include the telephone facilities available in the aforementioned locations.

In addition, the Exchange proposes to amend Exchange Rule 123.10 to clarify that, when giving out orders originating on the Exchange Floor, or transmitted by any person other than a member or member organization to members on the Exchange Floor, or when changing or cancelling orders previously given, members are required to do so electronically, or in writing.

The Exchange also seeks to amend Exchange Rule 123.23 to accurately reflect that currently member organizations employ vendor systems or proprietary systems to record the details of an order or report for purposes of Exchange Rule 123. Furthermore, the proposed conforming amendment to Exchange Rule 123.23 clarifies that whether a member organization employs a vendor system or uses its proprietary systems to record the details of an order or report, the system must be synchronized with reference to a time source as designated by the Exchange.

Conclusion. The Exchange believes that the above proposal provides Floor broker member organizations with the ability to remain competitive in view of changes in the markets and the manner in which customer orders are handled and executed by allowing Floor broker member organizations to represent customer orders from its approved booth premises similar to that of an ''upstairs'' office on the Exchange Floor in a robust regulatory environment that serves to foster just and equitable principles of trade and benefit Exchange customers.

2. Statutory Basis

The proposed rule change is consistent with Section 6(b) [10] of the Securities Exchange Act of 1934 (the ''Act''), in general, and furthers the objectives of Section 6(b)(5) [11] in particular in that it is designed to prevent fraudulent and manipulative acts and practices, to promote just and equitable principles of trade, to foster cooperation and coordination with persons engaged in facilitating transactions in securities, and to remove impediments to and perfect the mechanism of a free and open market and a national market system.

B. Self Regulatory Organization's Statement on Burden on Competition

The Exchange does not believe that the proposed rule change will impose any burden on competition that is not necessary or appropriate in furtherance of the purposes of the Act.

C. Self-Regulatory Organization's Statement on Comments on the Proposed Rule Change Received From Members, Participants or Others

The Exchange has neither solicited nor received written comments on the proposed rule change.

[10] 15 U.S.C. 78f(b).

[11] 15 U.S.C. 78f(b)(5).

III. Date of Effectiveness of the Proposed Rule Change and Timing for Commission Action

The foregoing rule change has become effective pursuant to Section 19(b)(3)(A)(iii) of the Act [12] and subparagraph (f)(6) of Rule 19b–4 [13] thereunder because it does not: (i) Significantly affect the protection of investors or the public interest; (ii) impose any significant burden on competition; (iii) become operative for 30 days from the date on which it was filed, or such shorter time as the Commission may designate if consistent with the protection of investors and the public interest.[14]

Under Rule 19b–4(f)(6) of the Act,[15] the proposal does not become operative for 30 days after the date of its filing, or such shorter time as the Commission may designate if consistent with the protection of investors and the public interest. NYSE has requested that the Commission waive the 30-day operative delay so that it may immediately implement this proposal which it believes will result in a more efficient and less costly service to the customers of Floor broker member organizations as a result of the Floor broker member organizations' ability to centralize operations in their booth premises. The Commission notes that the Exchange has already implemented two pilot programs that presently allow Floor brokers to access away liquidity in NASDAQ-listed securities and NYSE Arca-listed securities from the Exchange Floor. The Commission also notes that the member organizations must obtain approval from NYSE prior to operating pursuant to proposed Rule 70.40 and must continue to meet all their obligations pertaining to executions on the Exchange Floor. In addition, the Commission notes that any proprietary trading would be prohibited in approved booth premises, and requires significant obligations on the part of member organizations and NYSER with regard to such trading. The Commission believes that the proposed rule change should allow for greater efficiencies for the Exchange as well as member organizations which make use of approved booth premises. Therefore, the

[12] 15 U.S.C. 78s(b)(3)(A)(iii).

[13] 17 CFR 240.19b–4(f)(6).

[14] Rule 19b–4(f)(6)(iii) requires that a self-regulatory organizationsubmit to the Commission written notice of its intent to file the proposed rule change, along with a brief description and text of the proposed rule change, at least five business days prior to the date of filing of the proposed rule change, or such shorter time as designated by the Commission. The Exchange has satisfied the five-day pre-filing notice requirement.

[15] *Id.*

Commission, consistent with the protection of investors and the public interest, has determined to waive the 30-day operative date so that the proposal may take effect upon filing.[16]

At any time within 60 days of the filing of such proposed rule change, the Commission may summarily abrogate such rule change if it appears to the Commission that such action is necessary or appropriate in the public interest, for the protection of investors, or otherwise in furtherance of the purposes of the Act.

IV. Solicitation of Comments

Interested persons are invited to submit written data, views and arguments concerning the foregoing, including whether the proposed rule change is consistent with the Act. Comments may be submitted by any of the following methods:

Electronic Comments

- Use the Commission's Internet comment form (*http://www.sec.gov/rules/sro.shtml*); or
- Send e-mail to *rule-comments@sec.gov.* Please include File Number SR–NYSE–2007–51 on the subject line.

Paper Comments

- Send paper comments in triplicate to Nancy M. Morris, Secretary, Securities and Exchange Commission, 100 F Street, NE., Washington, DC 20549–1090.

All submissions should refer to File Number SR–NYSE–2007–51. This file number should be included on the subject line if e-mail is used. To help the Commission process and review your comments more efficiently, please use only one method. The Commission will post all comments on the Commission's Internet Web site (*http://www.sec.gov/rules/sro/shtml*). Copies of the submission, all subsequent amendments, all written statements with respect to the proposed rule change that are filed with the Commission, and all written communications relating to the proposed rule change between the Commission and any person, other than those that may be withheld from the public in accordance with the provisions of 5 U.S.C. 552, will be available for inspection and copying in the Commission's Public Reference Room. Copies of such filing will also be available for inspection and copying at the principal office of the Exchange. All comments received will be posted without change; the Commission does not edit personal identifying information from submissions. You should submit only information that you wish to make available publicly. All submissions should refer to File number SR–NYSE–2007–51 and should be submitted on or before July 11, 2007.

For the Commission, by the Division of Market Regulation, pursuant to delegated authority.[17]

Florence E. Harmon,

Deputy Secretary.

[FR Doc. E7–11941 Filed 6–19–07; 8:45 am]

BILLING CODE 8010–01–P

[16] For purposes only of waiving the operative delay for this proposal, theCommission has considered the proposed rule's impact on efficiency, competition, and capital formation. 15 U.S.C. 78c(f).

[17] 17 CFR 200.30–3(a)(12).

SMALL BUSINESS ADMINISTRATION

National Small Business Development Center Advisory Board; Public Meeting

The U.S. Small Business Administration, National Small Business Development Centers Advisory Board will be hosting a public meeting via conference call to discuss such matters that may be presented by members, the staff of the U.S. Small Business Administration, and interested others. The conference call will be held on Tuesday, July 17, 2007 at 1 p.m. Eastern Standard Time. The purpose of the meeting is to discuss the upcoming Ohio Site Visit and the current draft of the proposed White Paper. Anyone wishing to make an oral presentation to the Board must contact Erika Fischer, Senior Program Analyst, U.S. Small Business Administration, Office of Small Business Development Centers, 409 3rd Street, SW., Washington, DC 20416, telephone (202) 205–7045 or fax (202) 481–0681.

Matthew Teague,

Committee Management Officer.

[FR Doc. E7–11900 Filed 6–19–07; 8:45 am]

BILLING CODE 8025–01–P

SMALL BUSINESS ADMINISTRATION

National Small Business Development Center Advisory Board; Public Meeting

The U.S. Small Business Administration, National Small Business Development Center Advisory Board will hold a federal public meeting on Monday, July 9, 2007 at 4 p.m. Eastern Standard Time. The meeting will take place at the Ohio Department of Development, 77 South High Street, 31st Floor Board Room, Columbus, Ohio 43215. The purpose of the meeting is to discuss the current draft of the White Paper; Board business, and the forthcoming National Association of SBDC annual conference.

Anyone wishing to be present must contact Erika Fischer, Senior Program Analyst, U.S. Small Business Administration, Office of Small Business Development Centers, 409 3rd Street, SW., Washington, DC 20416, telephone (202) 205–7045 or fax (202) 481–0681.

Matthew Teague,

Committee Management Officer.

[FR Doc. E7–11901 Filed 6–19–07; 8:45 am]

BILLING CODE 8025–01–P

DEPARTMENT OF STATE

[Public Notice 5838]

Bureau of Political-Military Affairs; Statutory Debarment Under the Arms Export Control Act and the International Traffic in Arms Regulations

ACTION: Notice.

SUMMARY: Notice is hereby given that the Department of State has imposed statutory debarment pursuant to 127.7(c) of the International Traffic in Arms Regulations (''ITAR'') (22 CFR Parts 120 to 130) on persons convicted of violating or conspiring to violate Section 38 of the Arms Export Control Act, as amended, (''AECA'') (22 U.S.C. 2778).

EFFECTIVE DATE: Date of conviction as specified for each person.

FOR FURTHER INFORMATION CONTACT: David Trimble, Director, Office of Defense Trade Controls Compliance, Bureau of Political-Military Affairs, Department of State (202) 663–2700.

SUPPLEMENTARY INFORMATION: Section 38(g)(4) of the AECA, 22 U.S.C. 2778(g)(4), prohibits the Department of State from issuing licenses or other approvals for the export of defense articles or defense services where the applicant, or any party to the export, has been convicted of violating certain statutes, including the AECA. In implementing this provision, Section 127.7 of the ITAR provides for ''statutory debarment'' of any person who has been convicted of violating or conspiring to violate the AECA. Persons subject to statutory debarment are prohibited from participating directly or indirectly in the export of defense articles, including technical data, or in the furnishing of defense services for which a license or other approval is required.

Statutory debarment is based solely upon conviction in a criminal proceeding, conducted by a United States Court, and as such the administrative debarment procedures outlined in Part 128 of the ITAR are not applicable.

The period for debarment will be determined by the Assistant Secretary for Political-Military Affairs based on the underlying nature of the violations, but will generally be for three years from the date of conviction. At the end of the debarment period, export privileges may be reinstated only at the request of the debarred person followed by the necessary interagency consultations, after a thorough review of the circumstances surrounding the conviction, and a finding that appropriate steps have been taken to mitigate any law enforcement concerns, as required by Section 38(g)(4) of the AECA. Unless export privileges are reinstated, however, the person remains debarred.

Department of State policy permits debarred persons to apply to the Director, Office of Defense Trade Controls Compliance, for reinstatement beginning one year after the date of the debarment. Any decision to grant reinstatement can be made only after the statutory requirements under Section 38(g)(4) of the AECA have been satisfied.

Exceptions, also known as transaction exceptions, may be made to this debarment determination on a case-by-case basis at the discretion of the Assistant Secretary of State for Political-Military Affairs, after consulting with the appropriate U.S. agencies. However, such an exception would be granted only after a full review of all circumstances, paying particular attention to the following factors: whether an exception is warranted by overriding U.S. foreign policy or national security interests; whether an exception would further law enforcement concerns that are consistent with the foreign policy or national security interests of the United States; or whether other compelling circumstances exist that are consistent with the foreign policy or national security interests of the United States, and that do not conflict with law enforcement concerns. Even if exceptions are granted, the debarment continues until subsequent reinstatement.

Pursuant to Section 38(g)(4) of the AECA and Section 127.7(c) of the ITAR, the following persons are statutorily debarred as of the date of their AECA conviction:

(1) Reinhard Rusli, April 27, 2007, U.S. District Court, District of Maryland, Case #CCB–06–0439.

(2) Helmi Soedirdja, April 27, 2007, U.S. District Court, District of Maryland, Case #CCB–06–0439.

(3) Ibrahim Amran, May 3, 2007, U.S. District Court, Eastern District of Michigan, Case #06CR20183–2.

(4) David Beecroft, December 20, 2006, U.S. District Court, Eastern District of Michigan, Case #06CR20183–4.

(5) Ignatius Soeharli, April 27, 2007, U.S. District Court, Eastern District of Michigan, Case #06CR20183–3.

(6) Hadianto Djuliarso, May 11, 2007, U.S. District Court, Eastern District of Michigan, Case #06CR20183–1.

(7) Ronald W. Wiseman, October 27, 2006, U.S. District Court, District of Columbia, Case #05–0152–01(JR).

(8) Phong Hoang, July 27, 2006, U.S. District Court, District of Montana, Case #CR 05–170–GF–SEH–02.

(9) State Metals Industries, Inc., October 27, 2006, U.S. District Court, District of New Jersey, Case #2:06–CR–442–JLL.

(10) Romeo Dibattista (a.k.a. Romero Dibattista), January 10, 2006, U.S. District Court, Southern District of Florida, Case #05–20764–CR–KING.

(11) Luciano Dibattista, January 10, 2006, U.S. District Court, Southern District of Florida, Case #05–20764–CR–KING.

As noted above, at the end of the three-year period following the date of conviction, the above named persons/entities remain debarred unless export privileges are reinstated.

Debarred persons are generally ineligible to participate in activity regulated under the ITAR (see e.g., §§ 120.1(c) and (d), and 127.11(a)). Also, under § 127.1(c) of the ITAR, any person who has knowledge that another person is subject to debarment or is otherwise ineligible may not, without disclosure to and written approve from the Directorate of Defense Trade Controls, participate, directly or indirectly, in any export in which such ineligible person may benefit therefrom or has a direct or indirect interest therein.

This notice is provided for purposes of making the public aware that the persons listed above are prohibited from participating directly or indirectly in activities regulated by the ITAR, including any brokering activities and in any export from or temporary import into the United States of defense articles, related technical data, or defense services in all situations covered by the ITAR. Specific case information may be obtained from the Office of the Clerk for the U.S. District Courts mentioned above and by citing the court case number where provided.

Dated: June 7, 2007.

Michael W. Coulter,

Acting Assistant Secretary for Political-Military Affairs, Department of State.

[FR Doc. E7–11991 Filed 6–19–07; 8:45 am]

BILLING CODE 4710–25–P

DEPARTMENT OF TRANSPORTATION

Federal Motor Carrier Safety Administration

[Docket No. FMCSA–2007–27357]

Commercial Driver's License Advisory Committee

AGENCY: Federal Motor Carrier Safety Administration, DOT.

ACTION: Notice of meeting.

SUMMARY: This notice sets forth the schedule for an additional meeting of the Commercial Driver's License (CDL) Advisory Committee. Pursuant to section 4135 of the Safe, Accountable, Flexible, Efficient Transportation Equity Act: A Legacy for Users (SAFETEA–LU), the Secretary of Transportation established this advisory committee to study and address current impediments and foreseeable challenges to the commercial driver's license program's effectiveness and measures needed to realize the full safety potential of the commercial driver's license program. Members of the advisory committee include State motor vehicle administrators, organizations representing government agencies or officials, members of the Judicial Conference, representatives of the trucking industry, representatives of labor organizations, and safety advocates.

DATES: The meeting will be held on July 11–12, 2007.

Time: The meeting is scheduled to be conducted from 8:30 a.m. until 5 p.m. The meeting may end early or be extended based on the length of the discussions.

ADDRESSES: The committee's meetings are held at the Hilton Arlington, 950 North Stafford Street, Arlington, Virginia 22203. You may submit comments, identified by DOT DMS Docket Number FMCSA–2007–27357, by any of the following methods:

- *Federal eRulemaking Portal: http://www.regulations.gov.* Follow the instructions for submitting comments.
- *Agency Web Site: http://dms.dot.gov.* Follow the instructions for submitting comments on the DOT

electronic docket site. NOTE: Due to the relocation of the U.S. Department of Transportation, the DOT electronic docket site will not be available between June 13 and June 17, 2007. During this time you may submit comments by one of the alternate methods listed.

- *Fax:* 1–202–493–2251.
- *Mail:* U.S. Department of Transportation, Docket Operations, M–30, West Building Ground Floor, Room W12–140, 1200 New Jersey Ave., SE., Washington, DC 20590.
- *Hand Delivery:* U.S. Department of Transportation, West Building Ground Floor, Room W12–140, 1200 New Jersey Ave., SE., Washington, DC 20590, between 9 a.m. and 5 p.m., Monday through Friday, except Federal holidays.

Instructions: All submissions must include the agency name and docket number (FMCSA–2007–27357). Note that all comments received will be posted without change to *http://dms.dot.gov,* including any personal information provided. Please see the Privacy Act heading for further information.

Docket: For access to the docket to read background documents or comments received, go to *http://dms.dot.gov* at any time or to U.S. Department of Transportation, West Building Ground Floor, Room W12–140, 1200 New Jersey Ave., SE., Washington, DC 20590, between 9 a.m. and 5 p.m., Monday through Friday, except Federal holidays.

Privacy Act: Anyone is able to search the electronic form for all comments received into any of our dockets by the name of the individual submitting the comment (or signing the comment, if submitted on behalf of an association, business, labor union, etc.). You may review DOT's complete Privacy Act Statement in the **Federal Register** published on April 11, 2000 (65 FR 19477) or you may visit *http://dms.dot.gov.*

FOR FURTHER INFORMATION CONTACT: Lloyd E. Goldsmith, Transportation Specialist, CDL Division, at (202) 366–2964 (*lloyd.goldsmith@dot.gov*), Federal Motor Carrier Safety Administration, 1200 New Jersey Avenue, SE., Washington, DC 20590.

SUPPLEMENTARY INFORMATION: On August 10, 2005, the President signed into law the Safe, Accountable, Flexible, Efficient Transportation Equity Act: A Legacy for Users (Title VI, Pub. L. 109–59). Section 4135 mandates the establishment of a Commercial Driver's License (CDL) Task Force to study and address current impediments and foreseeable challenges to the commercial driver's license program's effectiveness and measures needed to realize the full safety potential of the commercial driver's license program. The CDL program was established by the Commercial Motor Vehicle Safety Act (CMVSA) of 1986 (Title XII, Pub. L. 99–570).

To carry out this requirement, FMCSA formed an advisory committee, consistent with the standards of the Federal Advisory Committee Act (FACA). See 71 FR 69605, December 1, 2006. The notice requested applications from persons interested in serving as members of the CDL Advisory Committee and requested applications not later than January 2, 2007. After evaluating all applications received by due date, the Secretary of Transportation appointed the members of the committee.

The statutory timetable for this effort is short. Section 4132 of the SAFETEA–LU specifies that not later than 2 years after the date of enactment of this Act (e.g., by August 10, 2007), the Secretary, on behalf of the task force, shall complete a report of findings and recommendations for legislative, regulatory, and enforcement changes to improve the commercial drivers license program and submit the report to the Committee on Commerce, Science, and Transportation of the Senate and the Committee on Transportation and Infrastructure of the House of Representatives. To meet this deadline, FMCSA conducted a very compressed schedule of Committee meetings. The FMCSA held three meetings with public comment periods on March 20–22, 2007, April 17–19, 2007, and May 15–17, 2007.

The meetings of the committee were open to the public. As a general matter, the committee made one hour available for public comments on the Thursday of each meeting (March 22, April 19, and May 17) from 1–2 p.m.

This fourth meeting is being scheduled to provide the committee time to adequately consider the information presented at the first three meetings and to review a draft of the report being prepared on behalf of the committee. No new topics will be introduced at this fourth meeting. This meeting is open to the public but there will be no public comment period at this meeting. However, any person may submit written comments identified by FMCSA Docket number FMCSA–2007–27357 as listed under the **ADDRESSES** section of this notice. FMCSA will consider all comments received to the extent practicable.

Issued on: June 12, 2007.

William A. Quade,

Acting Associate Administrator, Enforcement and Program Delivery.

[FR Doc. E7–11864 Filed 6–19–07; 8:45 am]

BILLING CODE 4910–EX–P

DEPARTMENT OF TRANSPORTATION

Federal Motor Carrier Safety Administration

[Docket No. FMCSA–2007–28013]

Medical Review Board Public Meeting

AGENCY: Federal Motor Carrier Safety Administration (FMCSA) United States Department of Transportation (DOT).

ACTION: Notice of Medical Review Board (MRB) public meeting.

SUMMARY: FMCSA announces that the MRB will hold its next meeting on July 26, 2007. The meeting will provide the public an opportunity to observe and participate in MRB deliberations about the revision and development of Federal Motor Carrier Safety Regulation (FMCSR) medical standards, in accordance with the Federal Advisory Committee Act (FACA).

DATES: The MRB meeting will be held from 9 a.m.–12:30 p.m. on July 26, 2007. Please note the preliminary agenda for this meeting in the **SUPPLEMENTARY INFORMATION** section of this notice for specific information.

ADDRESSES: The meeting will take place at the Sheraton Crystal City Hotel, 1800 Jefferson Davis Highway, Rooms Crystal V & VI, Crystal City, VA 22202. You may submit comments identified by DOT Docket Management System (DMS) Docket Number FMCSA–2007–28013 using any of the following methods:

- *Web Site: http://dmses.dot.gov/submit.* Follow the instructions for submitting comments on the DOT electronic docket site.
- *Fax:* 1–202–493–2251.
- *Mail:* Docket Management Facility; U.S. Department of Transportation, 1200 New Jersey Avenue, SE., West Building, Ground Floor, Room W12–140, Washington, DC 20590–0001.
- *Hand Delivery:* Room W12–140 on the ground level of the West Building, 1200 New Jersey Avenue, SE., Washington, DC, between 9 a.m. and 5 p.m., Monday through Friday, except Federal holidays.
- *Federal eRulemaking Portal:* Go to *http://www.regulations.gov.* Follow the online instructions for submitting comments.

Instructions: All submissions must include the Agency name and docket number for this notice. Note that all

comments received will be posted without change to *http://dms.dot.gov* including any personal information provided. Please see the Privacy Act heading for further information.

Docket: For access to the docket to read background documents or comments received, go to *http://dms.dot.gov* at any time or Room W12–140 on the ground level of the West Building, 1200 New Jersey Avenue, SE., Washington, DC, between 9 a.m. and 5 p.m., Monday through Friday, except Federal holidays. The DMS is available 24 hours each day, 365 days each year. If you want acknowledgment that we received your comments, please include a self-addressed, stamped envelope or postcard or print the acknowledgement page that appears after submitting comments online.

Privacy Act: Anyone may search the electronic form of all comments received into any of our dockets by the name of the individual submitting the comment (or of the person signing the comment, if submitted on behalf of an association, business, labor union, etc.). You may review the U.S. Department of Transportation's complete Privacy Act Statement in the **Federal Register** published on April 11, 2000 (65 FR 19477; Apr. 11, 2000). This information is also available at *http://dms.dot.gov.*

FOR FURTHER INFORMATION CONTACT: Dr. Mary D. Gunnels, Chief, Physical Qualifications Division, 202–366–4001.

Information on Services for Individuals with Disabilities: For information on facilities or services for individuals with disabilities or to request special assistance at the meeting, contact Kaye Kirby at 202–366–4001.

SUPPLEMENTARY INFORMATION: The preliminary agenda for the meeting includes:

09:00–09:05 Call to Order, Introduction and Agenda Review.
09:05–09:45 MRB Business, Action Items, Diabetes Mellitus, Neurological Diseases Part I (Seizure Disorders).
09:45–10:15 Expert Panel Recommendations (Invited Speaker).
10:15–11:00 Deliberations on Evidence Report and Panel Comments.
11:00–11:30 MRB Questions on Neurological Disease, Musculoskeletal Disease, Other Medical Topics.
11:30–12:30 Public Comment Period.
12:30 Adjourn.

Breaks will be announced on meeting day and may be adjusted according to schedule changes, and other meeting requirements.

Background

The U.S. Secretary of Transportation announced on March 7, 2006, the five medical experts who serve on FMCSA's MRB. Section 4116 of the Safe, Accountable, Flexible, Efficient Transportation Equity Act: A Legacy for Users (SAFETEA–LU, Pub. L. 109–59) requires the Secretary of Transportation with the advice of the MRB to ''establish, review, and revise medical standards for operators of Commercial Motor Vehicles (CMVs) that will ensure that the physical condition of operators is adequate to enable them to operate the vehicles safely.'' FMCSA is planning updates to the physical qualification regulations of CMV drivers, and the MRB will provide the necessary science-based guidance to establish realistic and responsible medical standards.

The MRB operates in accordance with the Federal Advisory Committee Act (FACA) as announced in the **Federal Register** (70 FR 57642, October 3, 2005). The MRB is charged initially with the review of all current FMCSA medical standards (49 CFR 391.41), as well as proposing new science-based standards and guidelines to ensure that drivers operating CMVs in interstate commerce, as defined in CFR 390.5, are physically capable of doing so.

Meeting Participation

Attendance is open to the interested public, including medical examiners, motor carriers, drivers, and representatives of medical and scientific associations. Written comments for this MRB meeting will also be accepted beginning on June 20, 2007 and continuing until July 20, 2007, and should include the docket number that is listed in the **ADDRESSES** section.

During the MRB meeting, oral comments will be accepted on a first come, first serve basis as requestors register at the meeting, but may be limited depending on how many persons wish to comment. The comments must directly address relevant medical and scientific issues on the MRB meeting agenda. For more information, please view the following Web site: *http://www.mrb.fmcsa.dot.gov.*

Issued on: June 12, 2007.

Larry W. Minor,

Acting Associate Administrator,Policy and Program Development.

[FR Doc. E7–11863 Filed 6–19–07; 8:45 am]

BILLING CODE 4910–EX–P

DEPARTMENT OF TRANSPORTATION

Federal Motor Carrier Safety Administration

[Docket No. FMCSA–99–5748, FMCSA–00–8398, FMCSA–01–9258, FMCSA–03–14223, FMCSA–05–20027]

Qualification of Drivers; Exemption Applications; Vision

AGENCY: Federal Motor Carrier Safety Administration (FMCSA), DOT.

ACTION: Notice of renewal of exemptions; request for comments.

SUMMARY: FMCSA announces its decision to renew the exemptions from the vision requirement in the Federal Motor Carrier Safety Regulations for 5 individuals. FMCSA has statutory authority to exempt individuals from the vision requirement if the exemptions granted will not compromise safety. The Agency has concluded that granting these exemptions will provide a level of safety that will be equivalent to, or greater than, the level of safety maintained without the exemptions for these commercial motor vehicle (CMV) drivers.

DATES: This decision is effective June 30, 2007. Comments must be received on or before July 20, 2007.

ADDRESSES: You may submit comments identified by DOT Docket Management System (DMS) Docket Numbers FMCSA–99–5748, FMCSA–00–8398, FMCSA–01–9258, FMCSA–03–14223, FMCSA–05–20027, using any of the following methods.

- *Web Site: ttp://dmses.dot.gov.* Follow the instructions for submitting comments on the DOT electronic docket site.
- *Fax:* 1–202–493–2251.
- Mail: Docket Management Facility; U.S. Department of Transportation, 1200 New Jersey Avenue, SE., West Building, Ground Floor, Room W12–140, Washington, DC 20590–0001.
- *Hand Delivery:* Room W12–140 on the ground level of the West Building, 1200 New Jersey Avenue, SE., Washington, DC, between 9 a.m. and 5 p.m., Monday through Friday, except Federal holidays.
- *Federal eRulemaking Portal:* Go to *http://www.regulations.gov.* Follow the online instructions for submitting comments.

Instructions: All submissions must include the Agency name and docket numbers for this Notice. Note that all comments received will be posted without change to *http://dms.dot.gov,* including any personal information

provided. Please see the Privacy Act heading for further information.

Docket: For access to the docket to read background documents or comments received, go to *http://dms.dot.gov* at any time or Room W12–140 on the ground level of the West Building, 1200 New Jersey Avenue, SE., Washington, DC, between 9 a.m. and 5 p.m., Monday through Friday, except Federal holidays. The DMS is available 24 hours each day, 365 days each year. If you want acknowledgment that we received your comments, please include a self-addressed, stamped envelope or postcard or print the acknowledgement page that appears after submitting comments on-line.

Privacy Act: Anyone may search the electronic form of all comments received into any of our dockets by the name of the individual submitting the comment (or of the person signing the comment, if submitted on behalf of an association, business, labor union, etc.). You may review the Department of Transportation's complete Privacy Act Statement in the **Federal Register** published on April 11, 2000 (65 FR 19477; Apr. 11, 2000). This information is also available at *http://dms.dot.gov.*

FOR FURTHER INFORMATION CONTACT: Dr. Mary D. Gunnels, Chief, Physical Qualifications Division, 202–366–4001, FMCSA, Room W64–224, U.S. Department of Transportation, 1200 New Jersey Avenue, SE., Washington, DC 20590–0001. Office hours are from 8:30 a.m. to 5 p.m. Monday through Friday, except Federal holidays.

SUPPLEMENTARY INFORMATION:

Exemption Decision

Under 49 U.S.C. 31136(e) and 31315, FMCSA may renew an exemption from the vision requirements in 49 CFR 391.41(b)(10), which applies to drivers of CMVs in interstate commerce, for a two-year period if it finds ''such exemption would likely achieve a level of safety that is equivalent to, or greater than, the level that would be achieved absent such exemption.'' The procedures for requesting an exemption (including renewals) are set out in 49 CFR part 381. This notice addresses 5 individuals who have requested renewal of their exemptions in accordance with FMCSA procedures. FMCSA has evaluated these 5 applications for renewal on their merits and decided to extend each exemption for a renewable two-year period. They are:

Roger K. Cox
Thomas E. Howard
Clifford E. Masink
Myron D. Dixon
Billy L. Johnson

These exemptions are extended subject to the following conditions: (1) That each individual have a physical examination every year (a) by an ophthalmologist or optometrist who attests that the vision in the better eye continues to meet the standard in 49 CFR 391.41(b)(10), and (b) by a medical examiner who attests that the individual is otherwise physically qualified under 49 CFR 391.41; (2) that each individual provide a copy of the ophthalmologist's or optometrist's report to the medical examiner at the time of the annual medical examination; and (3) that each individual provide a copy of the annual medical certification to the employer for retention in the driver's qualification file and retain a copy of the certification on his/her person while driving for presentation to a duly authorized Federal, State, or local enforcement official. Each exemption will be valid for two years unless rescinded earlier by FMCSA. The exemption will be rescinded if: (1) The person fails to comply with the terms and conditions of the exemption; (2) the exemption has resulted in a lower level of safety than was maintained before it was granted; or (3) continuation of the exemption would not be consistent with the goals and objectives of 49 U.S.C. 31136(e) and 31315.

Basis for Renewing Exemptions

Under 49 U.S.C. 31315(b)(1), an exemption may be granted for no longer than two years from its approval date and may be renewed upon application for additional two year periods. In accordance with 49 U.S.C. 31136(e) and 31315, each of the 5 applicants has satisfied the entry conditions for obtaining an exemption from the vision requirements (64 FR 40404; 64 FR 66962; 67 FR 17102; 70 FR 25878; 65 FR 78256; 66 FR 16311; 68 FR 13360; 70 FR 37891; 66 FR 17743; 66 FR 33990; 68 FR 35772; 70 FR 33937; 68 FR 10301; 68 FR 19596; 70 FR 16886; 70 FR 2701; 70 FR 16887). Each of these 5 applicants has requested renewal of the exemption and has submitted evidence showing that the vision in the better eye continues to meet the standard specified at 49 CFR 391.41(b)(10) and that the vision impairment is stable. In addition, a review of each record of safety while driving with the respective vision deficiencies over the past two years indicates each applicant continues to meet the vision exemption standards. These factors provide an adequate basis for predicting each driver's ability to continue to drive safely in interstate commerce. Therefore, FMCSA concludes that extending the exemption for each renewal applicant for a period of two years is likely to achieve a level of safety equal to that existing without the exemption.

Request for Comments

FMCSA will review comments received at any time concerning a particular driver's safety record and determine if the continuation of the exemption is consistent with the requirements at 49 U.S.C. 31136(e) and 31315. However, FMCSA requests that interested parties with specific data concerning the safety records of these drivers submit comments by July 20, 2007.

FMCSA believes that the requirements for a renewal of an exemption under 49 U.S.C. 31136(e) and 31315 can be satisfied by initially granting the renewal and then requesting and evaluating, if needed, subsequent comments submitted by interested parties. As indicated above, the Agency previously published notices of final disposition announcing its decision to exempt these 5 individuals from the vision requirement in 49 CFR 391.41(b)(10). The final decision to grant an exemption to each of these individuals was based on the merits of each case and only after careful consideration of the comments received to its notices of applications. The notices of applications stated in detail the qualifications, experience, and medical condition of each applicant for an exemption from the vision requirements. That information is available by consulting the above cited **Federal Register** publications.

Interested parties or organizations possessing information that would otherwise show that any, or all of these drivers, are not currently achieving the statutory level of safety should immediately notify FMCSA. The Agency will evaluate any adverse evidence submitted and, if safety is being compromised or if continuation of the exemption would not be consistent with the goals and objectives of 49 U.S.C. 31136(e) and 31315, FMCSA will take immediate steps to revoke the exemption of a driver.

Issued on: June 12, 2007.

Larry W. Minor,

Acting Associate Administrator, Policy and Program Development.

[FR Doc. E7–11862 Filed 6–19–07; 8:45 am]

BILLING CODE 4910–EX–P

DEPARTMENT OF TRANSPORTATION

Pipeline and Hazardous Materials Safety Administration

Office of Hazardous Materials Safety; Notice of Application for Special Permits

AGENCY: Pipeline and Hazardous Materials Safety Administration (PHMSA), DOT.

ACTION: List of applications for special permits.

SUMMARY: In accordance with the procedures governing the application for, and the processing of, special permits from the Department of Transportation's Hazardous Material Regulations (49 CFR Part 107, Subpart B), notice is hereby given that the Office of Hazardous Materials Safety has received the application described herein. Each mode of transportation for which a particular special permit is requested is indicated by a number in the ''Nature of Application'' portion of the table below as follows: 1—Motor vehicle, 2—Rail freight, 3—Cargo vessel, 4—Cargo aircraft only, 5—Passenger-carrying aircraft.

DATES: Comments must be received on or before July 20, 2007.

Address Comments to: Record Center, Pipeline and Hazardous Materials Safety Administration, U.S. Department of Transportation, Washington, DC 20590.

Comments should refer to the application number and be submitted in triplicate. If confirmation of receipt of comments is desired, include a self-addressed stamped postcard showing the special permit number.

FOR FURTHER INFORMATION CONTACT: Copies of the applications are available for inspection in the Records Center, Nassif Building, 400 7th Street, SW., Washington, DC or at *http://dms.dot.gov.*

This notice of receipt of applications for special permit is published in accordance with Part 107 of the Federal hazardous materials transportation law (49 U.S.C. 5117(b); 49 CFR 1.53(b)).

Issued in Washington, DC, on June 13, 2007.

Delmer Billings,

Director, Special Permits & Approvals Programs, Office of Hazardous Materials, Special Permits & Approvals.

Application No.	Docket No.	Applicant	Regulations(s) affected	Nature of special permits thereof;
		NEW SPECIAL PERMITS		
14517–N		The Children's Hospital Denver, CO.	49 CFR 173.196; 178.609	To authorize the one-way transportation in commerce of infectious substances other than Category A in specially designed packaging (freezers). (mode 1)
14519–N		Commordore Advanced Sciences, Inc. Richland, WA.	49 CFR 173.244	To authorize the one-time, one-way transportation in commerce of solidified sodium metal (UN1428) in alternative packaging from Mobile, Alabama to Oakridge, Tennessee. (modes 1,2)
14520–N		PPG Industries Monroeville, PA.	49 CFR 172.203(a),173.26 and 179.13	To authorize the transportation in commerce of Class 8 hazardous materials in DOT specification 111A100W6 tank car tanks that exceed the maximum allowable gross weight on rail (263,000 lbs.). (mode 2)
14522–N		Toyota Motor Sales, U.S.A., Inc. Torrance,CA.	49 CFR Part 172 and Part 173	To authorize the transportation in commerce of certain Class 8 and 9 hazardous materials across a public road within Toyota's facility to be transported as non-regulated. (mode 1)
14523–N		Pacific Bio-Material Management, Inc. Fresno, CA.	49 CFR 173.196(b); 173.196(e)(2)(ii)	To authorize the transportation in commerce of certain infectious substances in specially designed packaging (freezers). (mode 1)
14524–N		Oxia U.S. Ltd. Las Vegas, NV.	49 CFR 173.306(a)(1)	To authorize the transportation in commerce of a DOT Specification 3AL cylinder with a containing 90% oxygen and 10% nitrogen as consumer commodity when the capacity does not exceed 5.2 ounces transported by motor vehicle. (mode 1)
14525–N		Alcoa Inc. Pittsburgh, PA.	49 CFR Parts 171–180 except shipping papers and ID number marking.	To authorize the transportation in commerce of certain used diatomaceus earth filter material not subject to the Hazardous Materials Regulations, except for shipping papers and certain marking requirements when transported by motor vehicle. (mode 1)
14529–N		EnviroClean Management Services, Inc. Dallas, TX.	49 CFR 172.301(c); 173.197(d)	To authorize the transportation in commerce of regulated medical waste in containers that are not leak-proof per 173.197(d). (mode 1)

[FR Doc. 07–3021 Filed 6–19–07; 8:45 am]

BILLING CODE 4909–60–M

DEPARTMENT OF TRANSPORTATION

Pipeline and Hazardous Materials Safety Administration

Office of Hazardous Materials Safety; Notice of Delays in Processing of Special Permits Applications

AGENCY: Pipeline and Hazardous Materials Safety Administration (PHMSA), DOT.

ACTION: List of applications delayed more than 180 days.

SUMMARY: In accordance with the requirements of 49 U.S.C. 5117(c), PHMSA is publishing the following list of special permit applications that have been in process for 180 days or more. The reason(s) for delay and the expected completion date for action on each application is provided in association with each identified application.

FOR FURTHER INFORMATION CONTACT: Delmer Billings, Office of Hazardous Materials Special Permits and Approvals, Pipeline and Hazardous Materials Safety Administration, U.S. Department of Transportation, East Building, PHH–30, 1200 New Jersey Avenue Southeast, Washington, DC 20590–0001, (202) 366–4535.

Key to "Reason for Delay"

1. Awaiting additional information from applicant.
2. Extensive public comment under review.
3. Application is technically complex and is of significant impact or precedent-setting and requires extensive analysis.
4. Staff review delayed by other priority issues or volume of special permit applications.

Meaning of Application Number Suffixes

N—New application.

M—Modification request.

PM—Party to application with modification request.

Issued in Washington, DC, on June 13, 2007.

Delmer Billings,

Director, Special Permits & Approval Programs, Office of Hazardous Materials, Special Permits & Approvals.

Application No.	Applicant	Reason for delay	Estimated date of completion
	Modification to Special Permits		
10481–M	M–1 Engineering Limited, Bradfrod, West Yorkshire	4	07–31–2007
14167–M	Trinityrail, Dallas, TX	1,3,4	09–30–2007
12574–M	Weldship Corporation, Bethlehem, PA	4	07–31–2007
12574–M	Luxfer Gas Cylinders, Riverside, CA	4	07–31–2007
	New Special Permit Applications		
14385–N	Kansas City Southern Railway Company, Kansas City, MO	4	09–30–2007
14453–N	FIBA Technologies, Inc., Westboro, MA	4	07–31–2007
14452–N	Martek Biosciences Corporation, Winchester, KY	4	07–31–2007
14442–N	Trinityrail, Dallas, TX	4	09–30–2007
14436–N	BNSF Railway Company, Topeka, KS	4	09–30–2007
14402–N	Lincoln Composites, Lincoln, NE	1	12–31–2007

[FR Doc. 07–3022 Filed 6–19–07; 8:45 am]

BILLING CODE 4910–60–M

DEPARTMENT OF TRANSPORTATION

Pipeline and Hazardous Materials Safety Administration

Office of Hazardous Materials Safety; Notice of Applications for Modification of Special Permit

AGENCY: Pipeline and Hazardous Materials Safety Administration (PHMSA), DOT.

ACTION: List of Applications for Modification of Special Permit.

SUMMARY: In accordance with the procedures governing the application for, and the processing of, special permits from the Department of Transportation's Hazardous Material Regulations (49 CFR part 107, subpart B), notice is hereby given that the Office of Hazardous Materials Safety has received the application described herein. This notice is abbreviated to expedite docketing and public notice. Because the sections affected, modes of transportation, and the nature of application have been shown in earlier **Federal Register** publications, they are not repeated here. Request of modifications of special permits (e.g. to provide for additional hazardous materials, packaging design changes, additional mode of transportation, etc.) are described in footnotes to the application number. Application numbers with the suffix "M" demote a modification request. These applications have been separated from the new application for special permits to facilitate processing.

DATES: Comments must be received on or before July 5, 2007.

ADDRESSES: Record Center, Pipeline and Hazardous Materials Safety Administration, U.S. Department of Transportation, Washington, DC 20590.

Comments should refer to the application number and be submitted in triplicate. If confirmation of receipt of comments is desired, include a self-addressed stamped postcard showing the special permit number.

FOR FURTHER INFORMATION CONTACT: Copies of the applications are available for inspection in the Records Center, Nassif Building, 400 7th Street, SW., Washington, DC or at *http://dms.dot.gov.*

This notice of receipt of applications for modification of special permit is published in accordance with part 107 of the Federal hazardous materials transportation law (49 U.S.C. 5117(b); 49 CFR 1.53(b)).

Issued in Washington, DC, on June 13, 2007.

Delmer Billings,

Director, Special Permits & Approvals Programs, Office of Hazardous Materials, Special Permits & Approvals.

Application No.	Docket No.	Applicant	Regulation(s) affected	Nature of special permit thereof
MODIFICATION SPECIAL PERMITS				
8554–M		Austin Powder Company, Cleveland, OH.	49 CFR 173.62; 173.240; 173.242; 173.93; 173.114a; 173.154; 176.83; 176.415; 177.848(d).	To modify the special permit to authorize the transportation in commerce of certain 1.5D explosives in the same vehicle with 5.1 oxidizers.
11579–M		Dyno Nobel, Inc., Salt Lake City, UT.	49 CFR 177.848(e)(2); 177.848(g)(3).	To modify the special permit to authorize an additional packaging configuration for the transportation of Division 1.4, 1.5, & Combustible materials in DOT Specification and non-DOT specification bulk packagings.
11947–M		Patts Fabrication, Inc., Midland, TX.	49 CFR 173.202; 173.203; 173.241; 173.242.	To modify the special permit to authorize the transportation of additional Class 3 and 8 material in non-DOT specification containers.
14282–M		Dyno Nobel, Inc., Salt Lake City, UT.	49 CFR 173.835(g); 177.835(g)(3)(ii).	To modify the special permit to authorize the transportation in commerce of additional Division 3 and 5.1 materials.
14399–M		Gas Cylinder Technologies Inc., Tecumseh, Ontario.	49 CFR 173.301(a)(1); 173.301(a)(2); 173.301(f)(1); 173.302a; 173.302a(a)(1); 173.302a(f)(1); 178.65(g).	To modify the special permit to specifically authorize the transportation in commerce of oxygen compressed by air.
14466–M		Alaska Pacific Powder Company, Anchorage, AK.	49 CFR 172.101 Column (9B).	To reissue the special permit originally issued on an emergency basis for the transportation in commerce of certain Class 1 explosive materials which are forbidden for transportation by air, to be transported by cargo aircraft within the State of Alaska when other means of transportation are impracticable or not available.

[FR Doc. 07–3020 Filed 6–19–07; 8:45 am]
BILLING CODE 4909–60–M

DEPARTMENT OF TRANSPORTATION

Surface Transportation Board

[STB Finance Docket No. 34998 (Sub-No. 1)]

BNSF Railway Company—Temporary Trackage Rights Exemption—Union Pacific Railroad Company

Union Pacific Railroad Company (UP), pursuant to written trackage rights agreements entered into between UP and BNSF Railway Company (BNSF), has agreed to grant BNSF temporary overhead trackage rights to expire on July 29, 2007, over UP lines for: (1) Eastbound trains (a) on the Dallas Subdivision from milepost 245.3, Tower 55, at Ft. Worth, TX, to milepost 89.6, Longview, TX, (b) on the Little Rock Subdivision from milepost 89.6, Longview, to milepost 343.6, North Little Rock, AR, (c) on the Hoxie Subdivision from milepost 343.6, North Little Rock, to milepost 287.9, Bald Knob, AR, and (d) on the Memphis Subdivision from milepost 287.9, Bald Knob, to milepost 378.1, Kentucky Street, Memphis, TN, a distance of 542.2 miles; and (2) westbound trains (a) on the Memphis Subdivision from Kentucky Street to milepost 375.3, Briark, AR, (b) on the Brinkley Subdivision from milepost 4.1 to milepost 70.6, Brinkley, AR, (c) on the Jonesboro Subdivision from milepost 200.5 to milepost 264.2, Pine Bluff, AR, (d) on the Pine Bluff Subdivision from milepost 264.2 to milepost 525.1, Big Sandy, TX, and (e) on the Dallas Subdivision from milepost 114.5 to milepost 245.3, Tower 55, at Ft. Worth, a distance of 526.3 miles. The original grant of temporary overhead trackage rights exempted in *BNSF Railway Company—Temporary Trackage Rights Exemption—Union Pacific Railroad Company,* STB Finance Docket No. 34998 (STB served Feb. 27, 2007), covered the same lines, but expired on May 12, 2007. The purpose of this transaction is to modify the temporary overhead trackage rights exempted in STB Finance Docket No. 34998 to extend the expiration date from May 12, 2007, to July 29, 2007.

The transaction is scheduled to be consummated on June 30, 2007, the effective date of the exemption covered by this notice.[1] The temporary overhead trackage rights will allow BNSF to continue to bridge its train service while BNSF's main lines are out of service due to certain programmed track, roadbed and structural maintenance.

As a condition to this exemption, any employee affected by the acquisition of the temporary trackage rights will be protected by the conditions imposed in *Norfolk and Western Ry. Co.—Trackage Rights—BN,* 354 I.C.C. 605 (1978), as modified in *Mendocino Coast Ry., Inc.—Lease and Operate,* 360 I.C.C. 653 (1980), and any employee affected by the discontinuance of those trackage rights will be protected by the conditions set out in *Oregon Short Line R. Co.—Abandonment—Goshen*, 360 I.C.C. 91 (1979).

This notice is filed under 49 CFR 1180.2(d)(8). If it contains false or misleading information, the exemption is void *ab initio.* Petitions to revoke the exemption under 49 U.S.C. 10502(d) may be filed at any time. The filing of a petition to revoke will not automatically stay the transaction. Any stay petition must be filed on or before June 22, 2007 (at least 7 days before the exemption becomes effective).

An original and 10 copies of all pleadings, referring to STB Finance

[1] BNSF states that it filed this notice to extend retroactively the termination date of the temporary overhead trackage rights from May 12, 2007, to July 29, 2007. As noted, this exemption takes effect on June 30, 2007. BNSF should file notices of exemption designed to extend its temporary overhead traffic rights sufficiently in advance of the expiration date to allow the exemption to become effective prior to the previously noticed expiration date.

Docket No. 34998 (Sub-No. 1), must be filed with the Surface Transportation Board, 395 E Street, SW., Washington, DC 20423–1001. In addition, one copy of each pleading must be served on Sidney L. Strickland, Jr., Sidney Strickland and Associates, PLLC, 3050 K Street, NW., Suite 101, Washington, DC 20007.

Board decisions and notices are available on our Web site at *http://www.stb.dot.gov*.

Decided: June 14, 2007.

By the Board, David M. Konschnik, Director, Office of Proceedings.

Vernon A. Williams,

Secretary.

[FR Doc. E7–11890 Filed 6–19–07; 8:45 am]

BILLING CODE 4915–01–P

DEPARTMENT OF THE TREASURY

Submission for OMB Review; Comment Request

June 12, 2007.

The Department of the Treasury has submitted the following public information collection requirement(s) to OMB for review and clearance under the Paperwork Reduction Act of 1995, Public Law 104–13. Copies of the submission(s) may be obtained by calling the Treasury Bureau Clearance Officer listed. Comments regarding this information collection should be addressed to the OMB reviewer listed and to the Treasury Department Clearance Officer, Department of the Treasury, Room 11000, 1750 Pennsylvania Avenue, NW., Washington, DC 20220.

DATES: Written comments should be received on or before July 20, 2007 to be assured of consideration.

Financial Management Service (FMS)

OMB Number: 1510–0012.

Type of Review: Revision.

Title: Annual Financial Statements of Surety Companies—Schedule F.

Form: 6314.

Description: Surety and Insurance Companies report information used to compute the amount of unauthorized reinsurance to determine Treasury Certified Companies' underwriting limitations which are published in Treasury Circular 570.

Respondents: Businesses or other for-profit institutions.

Estimated Total Burden Hours: 14,373 hours.

Clearance Officer: Jiovannah Diggs (202) 874–7662, Financial Management Service, Room 135, 3700 East West Highway, Hyattsville, MD 20782.

OMB Reviewer: Alexander T. Hunt (202) 395–7316, Office of Management and Budget, Room 10235, New Executive Office Building, Washington, DC 20503.

Robert B. Dahl,

Treasury, PRA Clearance Officer.

[FR Doc. E7–11693 Filed 6–19–07; 8:45 am]

BILLING CODE 4810–35–P

DEPARTMENT OF VETERANS AFFAIRS

[OMB Control No. 2900–0300]

Agency Information Collection Activities Under OMB Review

AGENCY: Veterans Benefits Administration, Department of Veterans Affairs.

ACTION: Notice.

SUMMARY: In compliance with the Paperwork Reduction Act (PRA) of 1995 (44 U.S.C. 3501–3521), this notice announces that the Veterans Benefits Administration (VBA), Department of Veterans Affairs, has submitted the collection of information abstracted below to the Office of Management and Budget (OMB) for review and comment. The PRA submission describes the nature of the information collection and its expected cost and burden; it includes the actual data collection instrument.

DATES: Comments must be submitted on or July 20, 2007.

ADDRESSES: Submit written comments on the collection of information through *www.Regulations.gov;* or to VA's OMB Desk Officer, OMB Human Resources and Housing Branch, New Executive Office Building, Room 10235, Washington, DC 20503 (202) 395–7316. Please refer to ''OMB Control No. 2900–0300'' in any correspondence.

FOR FURTHER INFORMATION CONTACT: Denise McLamb, Records Management Service (005G2), Department of Veterans Affairs, 810 Vermont Avenue, NW., Washington, DC 20420, (202) 565–8374, fax (202) 565–7870 or e-mail *denise.mclamb@mail.va.gov.* Please refer to ''OMB Control No. 2900–0300'' In any correspondence.

SUPPLEMENTARY INFORMATION:

Title: Veterans Application for Assistance in Acquiring Special Housing Adaptations, VA Form 26–4555d.

OMB Control Number: 2900–0300.

Type of Review: Extension of a currently approved collection.

Abstract: Veterans who are disabled complete VA Form 26–4555d to apply for special housing and modification to their current dwellings. Grants are available to assist the veteran in making adaptations to their current residences or one they intend to live in as long as the veteran or a member of the veteran's family owns the home.

An agency may not conduct or sponsor, and a person is not required to respond to a collection of information unless it displays a currently valid OMB control number. The **Federal Register** Notice with a 60-day comment period soliciting comments on this collection of information was published on April 2, 2007, at page 15761.

Affected Public: Individuals or households.

Estimated Annual Burden: 25 hours.

Estimated Average Burden Per Respondent: 20 minutes.

Frequency of Response: On occasion.

Estimated Number of Respondents: 75.

Dated: June 11, 2007.

By direction of the Secretary.

Denise McLamb,

Program Analyst, Records Management Service.

[FR Doc. E7–11841 Filed 6–19–07; 8:45 am]

BILLING CODE 8320–01–P

DEPARTMENT OF VETERANS AFFAIRS

[OMB Control No. 2900–0559]

Agency Information Collection Activities Under OMB Review

AGENCY: National Cemetery Administration, Department of Veterans Affairs

ACTION: Notice.

SUMMARY: In compliance with the Paperwork Reduction Act (PRA) of 1995 (44 U.S.C. 3501–21), this notice announces that the National Cemetery Administration (NCA), Department of Veterans Affairs, has submitted the collection of information abstracted below to the Office of Management and Budget (OMB) for review and comment. The PRA submission describes the nature of the information collection and its expected cost and burden; it includes the actual data collection instrument.

DATES: Comments must be submitted on or before July 20, 2007.

ADDRESSES: Submit written comments on the collection of information through *www.Regulations.gov;* or to VA's OMB Desk Officer, OMB Human Resources and Housing Branch, New Executive Office Building, Room 10235, Washington, DC 20503 (202) 395–7316. Please refer to ''OMB Control No. 2900–0559'' in any correspondence.

FOR FURTHER INFORMATION OR A COPY OF THE SUBMISSION CONTACT: Denise McLamb, Records Management Service (005G2), Department of Veterans Affairs, 810 Vermont Avenue, NW., Washington, DC 20420, (202) 565–8374, FAX (202) 565–7870 or e-mail: *denise.mclamb@mail.va.gov.* Please refer to ''OMB Control No. 2900–0559.''

SUPPLEMENTARY INFORMATION:

Title: State Cemetery Data, VA Form 40–0241.

OMB Control Number: 2900–0559.

Type of Review: Extension of a currently approved collection.

Abstract: VA Form 40–0241 is used to provide data regarding number of interments conducted at State veterans' cemeteries each year. The State Cemetery Grants Services use the data collected to project the need for additional burial space and to demonstrate to the States (especially those without State veterans' cemeteries) the viability of the program.

An agency may not conduct or sponsor, and a person is not required to respond to a collection of information unless it displays a currently valid OMB control number. The **Federal Register** Notice with a 60-day comment period soliciting comments on this collection of information was published on April 9, 2007, at page 17629.

Affected Public: Federal Government, and State, Local or Tribal Government.

Estimated Annual Burden: 65.

Estimated Average Burden Per Respondent: 60 minutes.

Frequency of Response: Annually.

Estimated Number of Respondents: 65.

Dated: June 11, 2007.

By direction of the Secretary.

Denise McLamb,

Program Analyst, Records Management Service.

[FR Doc. E7–11842 Filed 6–19–07; 8:45 am]

BILLING CODE 8320–01–P

DEPARTMENT OF VETERANS AFFAIRS

[OMB Control No. 2900–0495]

Agency Information Collection Activities Under OMB Review

AGENCY: Veterans Benefits Administration, Department of Veterans Affairs

ACTION: Notice.

SUMMARY: In compliance with the Paperwork Reduction Act (PRA) of 1995 (44 U.S.C. 3501–3521), this notice announces that the Veterans Benefits Administration (VBA), Department of Veterans Affairs, has submitted the collection of information abstracted below to the Office of Management and Budget (OMB) for review and comment. The PRA submission describes the nature of the information collection and its expected cost and burden; it includes the actual data collection instrument.

DATES: Comments must be submitted on or before July 20, 2007.

ADDRESSES: Submit written comments on the collection of information through *www.Regulations.gov* or to VA's OMB Desk Officer, OMB Human Resources and Housing Branch, New Executive Office Building, Room 10235, Washington, DC 20503 (202) 395–7316. Please refer to ''OMB Control No. 2900–0495'' in any correspondence.

FOR FURTHER INFORMATION CONTACT: Denise McLamb, Records Management Service (005G2), Department of Veterans Affairs, 810 Vermont Avenue, NW., Washington, DC 20420, (202) 565–8374, FAX (202) 565–7870 or e-mail *denise.mclamb@mail.va.gov.* Please refer to ''OMB Control No. 2900–0495.''

SUPPLEMENTARY INFORMATION:

Title: Marital Status Questionnaire, VA Form 21–0537.

OMB Control Number: 2900–0495.

Type of Review: Extension of a currently approved collection.

Abstract: VA Form 21–0537 is used to confirm the marital status of a surviving spouse receiving dependency and indemnity compensation benefits (DIC). If a surviving spouse remarries, he or she is no longer entitled to DIC unless the marriage began after age 57 or has been terminated.

An agency may not conduct or sponsor, and a person is not required to respond to a collection of information unless it displays a currently valid OMB control number. The **Federal Register** Notice with a 60-day comment period soliciting comments on this collection of information was published on April 9, 2007, at page 17628.

Affected Public: Individuals or households.

Estimated Annual Burden: 189 hours.

Estimated Average Burden Per Respondent: 5 minutes.

Frequency of Response: On occasion.

Estimated Number of Respondents: 2,270.

Dated: June 11, 2007.

By direction of the Secretary.

Denise McLamb,

Program Analyst, Records Management Service.

[FR Doc. E7–11843 Filed 6–19–07; 8:45 am]

BILLING CODE 8320–01–P

DEPARTMENT OF VETERANS AFFAIRS

[OMB Control No. 2900–0020]

Agency Information Collection Activities Under OMB Review

AGENCY: Veterans Benefits Administration, Department of Veterans Affairs.

ACTION: Notice.

SUMMARY: In compliance with the Paperwork Reduction Act (PRA) of 1995 (44 U.S.C. 3501–3521), this notice announces that the Veterans Benefits Administration (VBA), Department of Veterans Affairs, has submitted the collection of information abstracted below to the Office of Management and Budget (OMB) for review and comment. The PRA submission describes the nature of the information collection and its expected cost and burden and includes the actual data collection instrument.

DATES: Comments must be submitted on or before July 20, 2007.

ADDRESSES: Submit written comments on the collection of information through *www.Regulations.gov;* or to VA's OMB Desk Officer, OMB Human Resources and Housing Branch, New Executive Office Building, Room 10235, Washington, DC 20503 (202) 395–7316. Please refer to ''OMB Control No. 2900–0020'' in any correspondence.

FOR FURTHER INFORMATION CONTACT: Denise McLamb, Records Management Service (005G2), Department of Veterans Affairs, 810 Vermont Avenue, NW., Washington, DC 20420, (202) 565–8374, fax (202) 565–7870 or e-mail *denise.mclamb@mail.va.gov.* Please refer to ''OMB Control No. 2900–2900–0020.''

SUPPLEMENTARY INFORMATION:

Title: Designation of Beneficiary, Government Life Insurance, VA Form 29–336.

OMB Control Number: 2900–0020.

Type of Review: Extension of a currently approved collection.

Abstract: VA Form 29–336 is completed by the insured to designate a beneficiary and select an optional settlement to be used when the Government Life Insurance matures by death.

An agency may not conduct or sponsor, and a person is not required to respond to a collection of information unless it displays a currently valid OMB control number. The **Federal Register** Notice with a 60-day comment period soliciting comments on this collection of information was published on April 2, 2007 at pages 15761–15762.

Affected Public: Individuals or households.

Estimated Annual Burden: 13,917 hours.

Estimated Average Burden Per Respondent: 10 minutes.

Frequency of Response: On occasion.

Estimated Number of Respondents: 83,500.

Dated: June 11, 2007.

By direction of the Secretary.

Denise McLamb,

Program Analyst, Records Management Service.

[FR Doc. E7–11844 Filed 6–19–07; 8:45 am]

BILLING CODE 8320–01–P

DEPARTMENT OF VETERANS AFFAIRS

[OMB Control No. 2900–0162]

Agency Information Collection Activities Under OMB Review

AGENCY: Veterans Benefits Administration, Department of Veterans Affairs.

ACTION: Notice.

SUMMARY: In compliance with the Paperwork Reduction Act (PRA) of 1995 (44 U.S.C. 3501–3521), this notice announces that the Veterans Benefits Administration (VBA), Department of Veterans Affairs, has submitted the collection of information abstracted below to the Office of Management and Budget (OMB) for review and comment. The PRA submission describes the nature of the information collection and its expected cost and burden; it includes the actual data collection instrument.

DATES: Comments must be submitted on or before July 20, 2007.

ADDRESSES: Submit written comments on the collection of information through *www.Regulations.gov* or to VA's OMB Desk Officer, OMB Human Resources and Housing Branch, New Executive Office Building, Room 10235, Washington, DC 20503 (202) 395–7316. Please refer to ''OMB Control No. 2900–0162'' in any correspondence.

FOR FURTHER INFORMATION CONTACT: Denise McLamb, Records Management Service (005G2), Department of Veterans Affairs, 810 Vermont Avenue, NW., Washington, DC 20420, (202) 565–8374, FAX (202) 565–7870 or e-mail *denise.mclamb@mail.va.gov.* Please refer to ''OMB Control No. 2900–0162.''

SUPPLEMENTARY INFORMATION:

Title: Monthly Certification of Flight Training, under Chapters 30 and 32, Title 38 U.S.C.; Chapters 1606 and 1607, Title 10 U.S.C.; and Section 903 of Public Law 96–342, VA Form 22–6553c.

OMB Control Number: 2900–0162.

Type of Review: Extension of a currently approved collection.

Abstract: Veterans, individuals on active duty training and reservist training, may receive benefits for enrolling in or pursuing approved vocational flight training. VA Form 22–6553c serves as a report of flight training pursued and termination of such training. Payments are base on the number of hours of flight training the veterans completed during each month.

An agency may not conduct or sponsor, and a person is not required to respond to a collection of information unless it displays a currently valid OMB control number. The **Federal Register** Notice with a 60-day comment period soliciting comments on this collection of information was published on April 2, 2007, at pages 15762–15763.

Affected Public: Individuals or households, business or other for-profit, and not-for-profit institutions.

Estimated Annual Burden: 3,714 hours.

Estimated Average Burden Per Respondent: 30 minutes.

Frequency of Response: On occasion.

Estimated Number of Respondents: 1,238.

Estimated Total Annual Responses: 7,428.

Dated: June 11, 2007.

By direction of the Secretary.

Denise McLamb,

Program Analyst, Records Management Service.

[FR Doc. E7–11845 Filed 6–19–07; 8:45 am]

BILLING CODE 8320–01–P

DEPARTMENT OF VETERANS AFFAIRS.

[OMB Control No. 2900–0600]

Agency Information Collection Activities Under OMB Review

AGENCY: Veterans Health Administration, Department of Veterans Affairs.

ACTION: Notice.

SUMMARY: In compliance with the Paperwork Reduction Act (PRA) of 1995 (44 U.S.C. 3501–3521), this notice announces that the Veterans Health Administration (VHA), Department of Veterans Affairs, has submitted the collection of information abstracted below to the Office of Management and Budget (OMB) for review and comment. The PRA submission describes the nature of the information collection and its expected cost and burden and includes the actual data collection instrument.

DATES: Comments must be submitted on or before July 20, 2007.

ADDRESSES: Submit written comments on the collection of information through *www.Regulations.gov;* or to VA's OMB Desk Officer, OMB Human Resources and Housing Branch, New Executive Office Building, Room 10235, Washington, DC 20503, (202) 395–7316. Please refer to ''OMB Control No. 2900–0600'' in any correspondence.

FOR FURTHER INFORMATION CONTACT: Denise McLamb, Records Management Service (005G2), Department of Veterans Affairs, 810 Vermont Avenue, NW., Washington, DC 20420, (202) 565–8374, fax (202) 565–7870 or e-mail *denise.mclamb@mail.va.gov.* Please refer to ''OMB Control No. 2900–0600.''

SUPPLEMENTARY INFORMATION:

Title: Regulation for Reconsideration of Denied Claims.

OMB Control Number: 2900–0600.

Type of Review: Extension of a currently approved collection.

Abstract: Veterans who disagree with the initial decision denying their healthcare benefits in whole or in part may obtain reconsideration by submitting a request in writing within one year of the date of the initial decision. The request must state why the decision is in error and include any new and relevant information not previously considered. This process reduces both formal appeals and allows decision making to be more responsive to veterans using the VA healthcare system.

An agency may not conduct or sponsor, and a person is not required to respond to a collection of information unless it displays a currently valid OMB control number. The **Federal Register** Notice with a 60-day comment period soliciting comments on this collection of information was published on April 9, 2007 at page 17630.

Affected Public: Individuals or households.

Estimated Total Annual Burden: 50,826 hours.

Estimated Average Burden Per Respondent: 30 minutes.

Frequency of Response: On occasion.

Estimated Number of Respondents: 101,652.

Dated: June 11, 2007.

By direction of the Secretary.

Denise McLamb,

Program Analyst, Records Management Service.

[FR Doc. E7–11846 Filed 6–19–07; 8:45 am]

BILLING CODE 8320–01–P

DEPARTMENT OF VETERANS AFFAIRS

[OMB Control No. 2900–0325]

Agency Information Collection Activities Under OMB Review

AGENCY: Veterans Benefits Administration, Department of Veterans Affairs.

ACTION: Notice.

SUMMARY: In compliance with the Paperwork Reduction Act (PRA) of 1995 (44 U.S.C. 3501–3521), this notice announces that the Veterans Benefits Administration (VBA), Department of Veterans Affairs, has submitted the collection of information abstracted below to the Office of Management and Budget (OMB) for review and comment. The PRA submission describes the nature of the information collection and its expected cost and burden; it includes the actual data collection instrument.

DATES: Comments must be submitted on or before July 20, 2007.

ADDRESSES: Submit written comments on the collection of information through *www.Regulations.gov* or to VA's OMB Desk Officer, OMB Human Resources and Housing Branch, New Executive Office Building, Room 10235, Washington, DC 20503 (202) 395–7316. Please refer to ''OMB Control No. 2900–0325'' in any correspondence.

FOR FURTHER INFORMATION CONTACT: Denise McLamb, Records Management Service (005G2), Department of Veterans Affairs, 810 Vermont Avenue, NW., Washington, DC 20420, (202) 565–8374, FAX (202) 565–7870 or e-mail *denise.mclamb@mail.va.gov.* Please refer to ''OMB Control No. 2900–0325.''

SUPPLEMENTARY INFORMATION:

Title: Certificate of Delivery of Advance Payment and Enrollment, VA Form 22–1999V.

OMB Control Number: 2900–0325.

Type of Review: Extension of a currently approved collection.

Abstract: VA will make payments of educational assistance in advance when the veteran, servivcemember, reservist, or eligible person has specifically requested such payment. The school in which a student is accepted or enrolled delivers the advance payment to the student and is required to certify the deliveries to VA. VA Form 22–1999V serves as the certificate of delivery of advance payment and to report any changes in the student's training status. The schools are required to report the following to VA: The failure of the student to enroll; an interruption or termination of attendance; or a finding of unsatisfactory attendance, conduct or progress.

An agency may not conduct or sponsor, and a person is not required to respond to a collection of information unless it displays a currently valid OMB control number. The **Federal Register** Notice with a 60-day comment period soliciting comments on this collection of information was published on April 9, 2007, at pages 17627–17628.

Affected Public: State, Local or Tribal Government, business or other for-profit, and not-for-profit institutions.

Estimated Annual Burden: 1,551 hours.

Estimated Average Burden Per Respondent: 5 minutes.

Frequency of Response: On occasion.

Estimated Number of Respondents: 2,807.

Estimated Total Number of Respondents: 18,614.

Dated: June 11, 2007.

By direction of the Secretary.

Denise McLamb,

Program Analyst, Records Management Service.

[FR Doc. E7–11847 Filed 6–19–07; 8:45 am]

BILLING CODE 8320–01–P

DEPARTMENT OF VETERANS AFFAIRS

[OMB Control No. 2900–0251]

Agency Information Collection Activities Under OMB Review

AGENCY: Veterans Benefits Administration, Department of Veterans Affairs.

ACTION: Notice.

SUMMARY: In compliance with the Paperwork Reduction Act (PRA) of 1995 (44 U.S.C. 3501–3521), this notice announces that the Veterans Benefits Administration (VBA), Department of Veterans Affairs, has submitted the collection of information abstracted below to the Office of Management and Budget (OMB) for review and comment. The PRA submission describes the nature of the information collection and its expected cost and burden; it includes the actual data collection instrument.

DATES: Comments must be submitted on or before July 20, 2007.

ADDRESSES: Submit written comments on the collection of information through *www.Regulations.gov;* or to VA's OMB Desk Officer, OMB Human Resources and Housing Branch, New Executive Office Building, Room 10235, Washington, DC 20503, (202) 395–7316. Please refer to ''OMB Control No. 2900–0251'' in any correspondence.

FOR FURTHER INFORMATION CONTACT: Denise McLamb, Records Management Service (005G2), Department of Veterans Affairs, 810 Vermont Avenue, NW., Washington, DC 20420, (202) 565–8374, fax (202) 565–7870 or e-mail *denise.mclamb@mail.va.gov.* Please refer to ''OMB Control No. 2900–0251'' in any correspondence.

SUPPLEMENTARY INFORMATION:

Title: Present Status of Loan, VA Form 26–8778.

OMB Control Number: 2900–0251.

Type of Review: Extension of a currently approved collection.

Abstract: VA Form 26–8778 is used to obtain information from servicers regarding the status of defaulted loans. VA will use the data collected to properly service the defaulted loan.

An agency may not conduct or sponsor, and a person is not required to respond to a collection of information unless it displays a currently valid OMB control number. The **Federal Register** Notice with a 60–day comment period soliciting comments on this collection of information was published on April 2, 2007, at pages 15768–15769.

Affected Public: Farm.

Estimated Annual Burden: 29,167 hours.

Estimated Average Burden Per Respondent: 10 minutes.

Frequency of Response: On occasion.

Estimated Number of Respondents: 175,000.

Dated: June 11, 2007.

By direction of the Secretary.

Denise McLamb,

Program Analyst, Records Management Service.

[FR Doc. E7–11848 Filed 6–19–07; 8:45 am]

BILLING CODE 8320–01–P

DEPARTMENT OF VETERANS AFFAIRS

[OMB Control No. 2900–0365]

Agency Information Collection Activities Under OMB Review

AGENCY: National Cemetery Administration, Department of Veterans Affairs

ACTION: Notice.

SUMMARY: In compliance with the Paperwork Reduction Act (PRA) of 1995 (44 U.S.C. 3501–3521), this notice announces that the National Cemetery Administration (NCA), Department of Veterans Affairs, has submitted the collection of information abstracted below to the Office of Management and Budget (OMB) for review and comment. The PRA submission describes the

nature of the information collection and its expected cost and burden; it includes the actual data collection instrument.

DATES: Comments must be submitted on or before July 20, 2007.

ADDRESSES: Submit written comments on the collection of information through *www.Regulations.gov;* or to VA's OMB Desk Officer, OMB Human Resources and Housing Branch, New Executive Office Building, Room 10235, Washington, DC 20503, (202) 395–7316. Please refer to ''OMB Control No. 2900–0365'' in any correspondence.

FOR FURTHER INFORMATION CONTACT: Denise McLamb, Records Management Service (005G2), Department of Veterans Affairs, 810 Vermont Avenue, NW., Washington, DC 20420, (202) 565–8374, fax (202) 565–7870 or e-mail *denise.mclamb@mail.va.gov.* Please refer to ''OMB Control No. 2900–0365'' in any correspondence.

SUPPLEMENTARY INFORMATION:

Title: Request for Disinterment, VA Form 40–4970.

OMB Control Number: 2900–0365.

Type of Review: Extension of a currently approved collection.

Abstract: Claimants complete VA Form 40–4970 to request removal of remains from a national cemetery for interment at another location. Interments made in national cemeteries are permanent and final. All immediate family members of the decedent, including the person who initiated the interment (whether or not he/she is a member of the immediate family), must provide a written consent before disinterment is granted. VA will accept an order from a court of local jurisdiction in lieu of VA Form 40–4970.

An agency may not conduct or sponsor, and a person is not required to respond to a collection of information unless it displays a currently valid OMB control number. The **Federal Register** Notice with a 60-day comment period soliciting comments on this collection of information was published on April 9, 2007, at pages 17629–17630.

Affected Public: Individuals or households.

Estimated Annual Burden: 55.

Estimated Average Burden Per Respondent: 10 minutes.

Frequency of Response: On occasion.

Estimated Number of Respondents: 329.

Dated: June 11, 2007.

By direction of the Secretary.

Denise McLamb,

Records Management Service.

[FR Doc. E7–11849 Filed 6–19–07; 8:45 am]

BILLING CODE 8320–01–P

DEPARTMENT OF VETERANS AFFAIRS

[OMB Control No. 2900–0117]

Agency Information Collection Activities Under OMB Review

AGENCY: Office of Human Resources and Administration, Department of Veterans Affairs.

ACTION: Notice.

SUMMARY: In compliance with the Paperwork Reduction Act (PRA) of 1995 (44 U.S.C. 3501–21), this notice announces that the Office of Human Resources and Administration (OHR&A), Department of Veterans Affairs, has submitted the collection of information abstracted below to the Office of Management and Budget (OMB) for review and comment. The PRA submission describes the nature of the information collection and its expected cost and burden; it includes the actual data collection instrument.

DATES: Comments must be submitted on or before July 20, 2007.

ADDRESSES: Submit written comments on the collection of information through *www.Regulations.gov;* or to VA's OMB Desk Officer, OMB Human Resources and Housing Branch, New Executive Office Building, Room 10235, Washington, DC 20503 (202) 395–7316. Please refer to ''OMB Control No. 2900–0117'' in any correspondence

FOR FURTHER INFORMATION OR A COPY OF THE SUBMISSION CONTACT: Denise McLamb, Records Management Service (005G2), Department of Veterans Affairs, 810 Vermont Avenue, NW., Washington, DC 20420, (202) 565–8374, FAX (202) 565–7870 or e-mail: *denise.mclamb@mail.va.gov.* Please refer to ''OMB Control No. 2900–0117.''

SUPPLEMENTARY INFORMATION:

Title: Inquiry Concerning Applicant for Employment, VA Form Letter 5–127.

OMB Control Number: 2900–0117.

Type of Review: Extension of a currently approved collection.

Abstract: VA Form Letter 5–127 is used to verify qualifications of applicants for employment at VA. This information is obtained from individuals who have knowledge of the applicants' past work record, performance, and character. VA will use the data collected to determine the applicant's suitability and qualifications for employment.

An agency may not conduct or sponsor, and a person is not required to respond to a collection of information unless it displays a currently valid OMB control number. The **Federal Register** Notice with a 60-day comment period soliciting comments on this collection of information was published on February 27, 2007, at pages 8837–8838.

Affected Public: Business or other for-profit, individuals or households, State, Local or Tribal Government.

Estimated Annual Burden: 3,125 hours.

Estimated Average Burden Per Respondent: 15 minutes.

Frequency of Response: One-time.

Estimated Number of Respondents: 12,500.

Dated: June 11, 2007.

By direction of the Secretary.

Denise McLamb,

Records Management Service.

[FR Doc. E7–11852 Filed 6–19–07; 8:45 am]

BILLING CODE 8320–01–P

DEPARTMENT OF VETERANS AFFAIRS

[OMB Control No. 2900–0222]

Agency Information Collection Activity: Proposed Collection; Comment Request

AGENCY: National Cemetery Administration, Department of Veterans Affairs.

ACTION: Notice.

SUMMARY: In compliance with the Paperwork Reduction Act (PRA) of 1995, (44 U.S.C. 3501–21), this notice announces that the National Cemetery Administration (NCA), Department of Veterans Affairs, has submitted the collection of information abstracted below to the Office of Management and Budget (OMB) for review and comment. The PRA submission describes the nature of the information collection and its expected cost and burden and includes the actual data collection instrument.

DATES: Comments must be submitted on or before July 20, 2007.

ADDRESSES: Submit written comments on the collection of information through *www.Regulations.gov;* or to VA's OMB Desk Officer, OMB Human Resources and Housing Branch, New Executive Office Building, Room 10235, Washington, DC 20503 (202) 395–7316. Please refer to ''OMB Control No. 2900–0222'' in any correspondence.

FOR FURTHER INFORMATION CONTACT: Denise McLamb, Records Management Service (005G2), Department of Veterans Affairs, 810 Vermont Avenue, NW., Washington, DC 20420, (202) 565–8374, fax (202) 565–7870 or e-mail *denise.mclamb@mail.va.gov.* Please refer to ''OMB Control No. 2900–0222'' in any correspondence.

SUPPLEMENTARY INFORMATION:

Title: Application for Standard Government Headstone or Marker for Installation in a Private or State Veterans' Cemetery, VA Form 40–1330.

OMB Control Number: 2900–0222.

Type of Review: Extension of a currently approved collection.

Abstract: The next of kin or other responsible parties of deceased veterans complete VA Form 40–1330 to apply for Government provided headstones or markers for unmarked graves. VA uses the data collected to determine the veteran's eligibility for headstone or marker.

An agency may not conduct or sponsor, and a person is not required to respond to a collection of information unless it displays a currently valid OMB control number. The **Federal Register** Notice with a 60-day comment period soliciting comments on this collection of information was published on April 9, 2007 at page 17625.

Affected Public: Individuals or households.

Estimated Annual Burden: 83,500 hours.

Estimated Average Burden Per Respondent: 15 minutes.

Frequency of Response: On occasion.

Estimated Number of Respondents: 334,000.

Dated: June 11, 2007.

By direction of the Secretary.

Denise McLamb,

Program Analyst, Records Management Service.

[FR Doc. E7–11853 Filed 6–19–07; 8:45 am]

BILLING CODE 8320–01–P

Federal Register

Wednesday,
June 20, 2007

Part II

Architectural and Transportation Barriers Compliance Board

36 CFR Part 1195

Architectural Barriers Act (ABA) Accessibility Guidelines for Outdoor Developed Areas; Proposed Rule

ARCHITECTURAL AND TRANSPORTATION BARRIERS COMPLIANCE BOARD

36 CFR Part 1195

[Docket No. 2007–02]

RIN 3014–AA22

Architectural Barriers Act (ABA) Accessibility Guidelines for Outdoor Developed Areas

AGENCY: Architectural and Transportation Barriers Compliance Board.

ACTION: Notice of proposed rulemaking.

SUMMARY: The Architectural and Transportation Barriers Compliance Board (Access Board) is proposing to issue accessibility guidelines for outdoor developed areas designed, constructed, or altered by Federal agencies subject to the Architectural Barriers Act of 1968. The guidelines cover trails, outdoor recreation access routes, beach access routes, and picnic and camping facilities.

DATES: Comments should be received by October 18, 2007. The Access Board will hold hearings on July 24, 2007 from 2 p.m. until 5 p.m. and on September 6, 2007 from 2 p.m. until 5 p.m.

ADDRESSES: You may submit comments, identified by Docket No. 2007–02, by any of the following methods:

- *Federal eRulemaking Portal: http://www.regulations.gov.* Follow the instructions for submitting comments.
- *E-mail: outdoor@access-board.gov.* Include Docket No. 2007–02 in the subject line of the message.
- *Fax:* (202) 272–0081.
- *Mail or Hand Delivery:* Office of Technical and Information Services, Architectural and Transportation Barriers Compliance Board, 1331 F Street, NW., suite 1000, Washington, DC 20004–1111.

All submissions received must include the agency name and docket number for this rulemaking. All comments received will be posted without change to *http://www.access-board.gov*, including any personal information provided. Comments will also be available for inspection at the above address from 9 a.m. to 5 p.m. on regular business days. The hearing on July 24, 2007 will be held at the Westin Westminster, 10600 Westminster Boulevard, Westminster, CO 80020; the hearing on September 6, 2007 will be held at the Madison Hotel, 1177 Fifteenth Street, NW., Washington, DC 20005.

FOR FURTHER INFORMATION CONTACT: Bill Botten, Office of Technical and Information Services, Architectural and Transportation Barriers Compliance Board, 1331 F Street, NW., suite 1000, Washington, DC 20004–1111. Telephone number (202) 272–0014 (Voice); (202) 272–0082 (TTY). These are not toll-free numbers. E-mail address: *botten@access-board.gov.*

SUPPLEMENTARY INFORMATION:

Availability of Copies and Electronic Access

Single copies of this publication may be obtained at no cost by calling the Access Board's automated publications order line (202) 272–0080, by pressing 2 on the telephone keypad, then 1 and requesting publication S–65 (Outdoor Developed Areas Notice of Proposed Rulemaking). Please record your name, address, city, State, zip code, telephone number and request publication code S–65. Persons using a TTY should call (202) 272–0082. This document is available in alternate formats upon request. Persons who want this publication in an alternate format should specify the type of format (cassette tape, Braille, large print, or ASCII disk). This document is also available on the Board's Web site (*http://www.access-board.gov*).

Background

The Architectural and Transportation Barriers Compliance Board (Access Board) is responsible for developing accessibility guidelines to ensure that new construction and alterations of facilities subject to the Americans with Disabilities Act of 1990 and the Architectural Barriers Act of 1968 are readily accessible to and usable by individuals with disabilities. The Americans with Disabilities Act applies to State and local government facilities, places of public accommodation, and commercial facilities. The Architectural Barriers Act applies to federally financed facilities.

The Access Board has developed accessibility guidelines for buildings and various other facilities subject to the Americans with Disabilities Act and the Architectural Barriers Act. The Access Board recently revised the Americans with Disabilities Act and the Architectural Barriers Act Accessibility Guidelines in 2004. 69 FR 44084 (July, 23, 2004). The revised accessibility guidelines are codified at 36 CFR Part 1191, Appendices A through E, and are available at the Access Board's Web site (*http://www.access-board.gov/ada-aba/final.htm*). The revised accessibility guidelines include scoping and technical provisions for several types of recreation facilities, including recreational boating facilities, fishing piers and platforms, golf facilities, play areas, and swimming pools. However, the revised accessibility guidelines do not address access to such outdoor developed areas as trails, beaches, and picnic and camping facilities.

The Access Board convened a Recreation Access Advisory Committee in 1993 as the first step in developing accessibility guidelines for outdoor developed areas and other recreation facilities. The advisory committee presented its report in 1994, and the Access Board issued an Advance Notice of Proposed Rulemaking (ANPRM) the same year requesting public comment on the committee's recommendations. 59 FR 48542 (September 21, 1994). The public comments revealed a lack of consensus on some major issues regarding outdoor developed areas.

The Access Board subsequently established a regulatory negotiation committee in 1997 to propose accessibility guidelines for outdoor developed areas.[1] Regulatory negotiation is a supplement to the traditional rulemaking process that allows for face to face negotiations among representatives of affected interests, including the agency, with a goal of reaching consensus on a proposed rule. The proposed rule is then published in the **Federal Register** and the public has an opportunity to comment. Based on public comments received, the final rule may differ from the proposed rule. The regulatory negotiation committee reached consensus on proposed accessibility guidelines for outdoor developed areas, and presented its report to the Access Board in 1999. The regulatory negotiation committee's report is available at the Access Board's Web site (*http://www.access-board.gov/outdoor/outdoor-rec-rpt.htm*).

Federal agencies are required to assess the impacts of proposed rules and final rules, and prepare detailed analyses of

[1] The following organizations were represented on the regulatory negotiation committee: American Society of Landscape Architects; American Camping Association; American Trails; Appalachian Trail Conference; Association of Blind Athletes; Hawaii Commission on Persons with Disabilities; KOA, Inc.; National Association of State Park Directors; National Association of State Trail Administrators; National Center on Accessibility; National Council on Independent Living; National Recreation and Park Association; National Spinal Cord Injury Association; New York State Department of Environmental Conservation; Paralyzed Veterans of America; Partners for Access to the Woods; Rails to Trails Conservancy; State of Washington, Interagency Committee for Outdoor Recreation; TASH; U.S. Army Corps of Engineers; U.S. Department of Agriculture, Forest Service; U.S. Department of Interior, National Park Service; U.S. Department of Transportation, Federal Highway Administration; U.S. Access Board; and Whole Access.

the costs and benefits of the rules if the impacts are economically significant.[2] Sufficient data is not presently available for the Access Board to assess the impacts of the proposed accessibility guidelines for outdoor developed areas on State and local governments and private entities. Consequently, the Access Board has decided to limit this proposed rule to outdoor developed areas designed, constructed, or altered by Federal agencies subject to the Architectural Barriers Act. At a future date, when an assessment of the impacts on State and local governments and private entities can be prepared, the Access Board will conduct a separate rulemaking for outdoor developed areas subject to the Americans with Disabilities Act.

The proposed rule will primarily affect the following Federal land management agencies and their components: Department of Agriculture (Forest Service); Department of Interior (National Park Service, Fish and Wildlife Service, Bureau of Land Management, and Bureau of Reclamation), and Department of Defense (Army Corps of Engineers). In May 2006, the Forest Service published a notice of a final directive that requires compliance with the Forest Service Outdoor Recreation Accessibility Guidelines (FSORAG), 71 FR 29288 (May 22, 2006), and the Forest Service Trail Accessibility Guidelines (FSTAG) 71 FR 29294 (May 22, 2006). The FSORAG and FSTAG provide accessibility direction for outdoor developed recreation areas in the National Forest System. When the Board finalizes its accessibility guidelines for outdoor developed areas, the Forest Service will revise the FSORAG and FSTAG as needed to incorporate the Board's guidelines.

The proposed accessibility guidelines in the regulatory negotiation committee's report followed the format and numbering system of the Americans with Disabilities Act Accessibility Guidelines that was initially issued by the Access Board in 1991. As indicated earlier, the Access Board revised the Americans with Disabilities Act and the Architectural Barriers Act Accessibility Guidelines in 2004. The revised accessibility guidelines use a new format and numbering system. The proposed rule follows the new format and numbering system of the revised accessibility guidelines. The proposed rule has also been edited to conform to the style of the revised accessibility guidelines. The substance of the proposed rule is the same as in the regulatory negotiation committee's report.

The proposed rule is presented as a ''stand alone'' document. The proposed rule consists of four chapters. Chapter T1 contains general provisions. Chapter T2 contains scoping provisions for trails, outdoor recreation access routes, beach access routes, picnic and camping facilities, and elements associated with those facilities. Chapter T3 contains technical provisions that are unique to the items scoped in Chapter T2. Chapter T4 contains supplementary technical provisions that are common to all facilities such as turning space, reach ranges, operable parts, and doors, and are also applicable to the items scoped in Chapter T2. Chapter T4 also adapts the technical provisions for toilet facilities to apply to pit toilets. Facilities and elements such as visitor centers, parking lots, plumbed toilets and bathing facilities, drinking fountains, recreational boating facilities, and fishing piers and platforms that are covered by the Architectural Barriers Act Accessibility Guidelines issued in 2004 are not included in this proposed rule. A provision has been added to Chapter T2 (T201.4) requiring facilities and elements covered by the Architectural Barriers Act Accessibility Guidelines to comply with those guidelines.

The Board invites comment on the format of the proposed rule and other format recommendations for the final rule.

Access Board Questions

The Board requests comments on the following questions related to the accessibility guidelines proposed by the Regulatory Negotiation Committee.

Question 1: The Board acknowledges the difficulty in reaching consensus on proposed accessibility guidelines for newly constructed and altered trails and appreciates the hard work of the regulatory negotiation committee. Throughout the committee's deliberations, several alternative approaches to addressing trail accessibility were considered. Some of the approaches considered and rejected included applying different provisions to ''front'' country and ''back'' country trails; general exemptions from accessibility in some areas; different provisions based on levels of development; and requiring only a certain percentage of new trails to be accessible. A summary of the committee's deliberations on these approaches is included in the preamble under the section on trails (T203). The committee reached consensus on the approach presented in this proposed rule. Should the approaches that were rejected be reconsidered? Are there other approaches the Board should consider? If so, please provide information on how the alternative approaches would be applied and their rationale.

Question 2: The proposed guidelines include conditions for exceptions from the technical provisions (T302). Condition 4 permits specific exceptions to the technical provisions for trails where compliance would not be feasible due to terrain or prevailing construction practices. The term ''not feasible'' is used in Condition 4 to specify what is ''reasonably do-able.'' It does not refer to the technical infeasibility or possibility of full compliance with the technical provisions. Should the word ''practicable'' also be used in this condition? That is, are there situations where it would be ''reasonably do-able'' to comply with the guidelines, but it is not ''practicable'' to do so? Should there be more guidance for determining what is or is not feasible or practicable in applying Condition 4? If so, what type of guidance should be provided? Should the guidance give specific examples of situations where certain provisions such as maximum running slope may not be feasible or practicable for a portion of a trail?

Question 3: A newly constructed trail that complies with the technical provisions for trails would be considered an accessible trail and is required to display a symbol designating the trail as accessible. The committee did not reach consensus on what symbol should be displayed on the sign. Some suggested that the International Symbol of Accessibility that is used to designate accessible features in buildings was not appropriate to designate accessible trails because the technical provisions for trails differ from the technical provisions for accessible routes in buildings, and using the International Symbol of Accessibility for accessible trails may convey the message that accessible trails meet the same technical provisions as accessible routes in buildings. Others suggested that the International Symbol of Accessibility be paired with the International Hiker Symbol. Comments on this suggestion or other suggested symbols are welcome.

The committee also recommended that trail signs provide detailed information about the trails' running

[2] A rule is considered economically significant if it may have ''an annual effect on the economy of $100 million or more, or adversely affect in a material way the economy, a sector of the economy, productivity, competition, jobs, the environment, public health or safety, or State, local, or tribal governments or communities.'' Executive Order 12866, section (f)(1).

slope, width, cross slope, and other characteristics. This would enable people to make informed decisions about using trails based on the characteristics of the trails. On the other hand, it was noted that this approach might result in signs that would be too elaborate and complicated, and some hikers might not be able to distinguish between the various characteristics to make appropriate choices. The Board requests comment on this issue. Information is provided in the advisory note to T321.2 showing examples of signs and other details. Question 25 also requests further comment on trail signage.

Question 4: The committee proposed that a beach access route be required where pedestrian routes are provided to or along the edge of a beach. Several exceptions to this general requirement are included in the proposed rule. Section T205.2.3 Exception 6 provides an exception for pedestrian routes that are developed along the edge of an existing beach, such as a boardwalk. Under this exception, beach access routes would not be required if the pedestrian route or boardwalk is elevated 6 inches or higher above the beach surface. The Board is concerned that this exception will not provide sufficient access for persons with disabilities, especially where lengthy elevated boardwalk systems are provided. In view of this, the Board requests comments on whether a higher threshold than 6 inches should be used.

Question 5: The proposed rule requires beach access routes to be a minimum of 36 inches in width. Should this width be increased? When beach access routes are less than 60 inches in width, a passing space of 60 inches by 60 inches would be required every 200 feet. Should the passing space be larger? Should passing spaces be provided more frequently than every 200 feet? The Board is interested in information from designers or operators who have provided beach access routes.

Question 6: The proposed rule requires beach access routes to extend to the water. The Board requests comments on whether beach access routes should connect managed elements and spaces often located on a beach such as beach volleyball courts, first aid stations, beach rental equipment facilities, and concession stands.

Question 7: The proposed rule (T308.3) requires the height of the cooking surface of a grill to be 15 inches minimum to 34 inches maximum above the floor or ground surface. Is the 15 inch minimum height too low? If so, what dimension should be used and why?

Question 8: The number of picnic tables, grills, benches, and other elements required to be accessible in this proposed rule is based on what is provided in an area. While no definition of area is provided, several examples are included in the advisory note to T206.2.2 to give guidance on what is intended. Areas may be ''designated locations'', separated and identified by a name or connected to a separate entrance road. Areas may also be separated and include different settings on the same site. For example, a picnic area located next to a lake in a park is considered a separate picnic area from a pavilion with numerous picnic tables within the same park. Does the term ''area'' need to be defined? If so, please provide a recommended definition.

Question 9: Extensive information is included in the advisory note to T303.3 (Table A) on the degree of firmness and stability of a trail surface. The Board is seeking comment on whether the recommendations for the degree of surface firmness and stability should be based on the length of travel, the intended use, or the direction of traffic. For example, surfaces that are moderately firm or stable may be appropriate in areas where a cushioned surface is preferred (*e.g.*, for a multi-use trail that includes equestrians).

The Board requests comment on the concept of having a range of requirements for what will qualify as firm and stable. For example, is it acceptable for a trail under .5 miles in length to be only ''moderately'' firm? Is it acceptable for a trail less than .1 miles in length to be only ''moderately'' firm and ''moderately'' stable? Further, is it appropriate to consider a surface firm if the wheel of a wheelchair sinks into it by .5 inch? And, is it appropriate to measure both firmness and stability by the same wheelchair penetration test? While this information is only advisory, the Board requests comments on whether it should be included in the advisory at all.

Question 10: Should the number of required accessible outdoor elements such as picnic tables, fire rings, and benches be increased from the scoping provisions in Chapter T2? In most cases, 50% of the elements provided are required to be accessible. Of those elements required to be accessible, 40% are also required to be connected by an outdoor recreation access route. The Board is interested in comments and alternatives to the scoping provisions for these elements.

Question 11: The guidelines issued by the Board in 2004 include changes to the technical provisions for reach ranges. The high side reach was changed from 54 inches to 48 inches maximum. Additionally, the low reach was changed from 9 inches to 15 inches minimum. These revised reach range provisions are included in Chapter T4. However, the proposed low reach for the fire building surface on fire rings was unchanged. The Board did not modify this provision since the regulatory negotiation committee specifically addressed the 9 inch minimum for this element. The Board is interested in comment on the application of the revised reach ranges to the various controls and operating mechanisms addressed in this proposed rule.

General Issues

The remainder of the preamble is from the report of the Regulatory Negotiation Committee.

Alterations and Maintenance

Alterations and maintenance of trails were discussed extensively by the committee. As a result of these discussions, guidance in determining when actions would be considered ''maintenance'' or an ''alteration'' was needed. Where actions are considered an alteration, certain technical provisions will apply. There are no obligations to follow any technical provisions where the actions are considered maintenance or repair.

Routine or periodic maintenance or repair of existing trails or trail segments is exempt from scoping and technical provisions for accessible trails. Maintenance and repair is performed to return a trail or trail segment back to the standards or conditions to which it was originally designed and built. In outdoor environments, the ability to maintain a facility is generally more limited, occurring relatively infrequently, except in highly developed areas. This type of work is not an alteration; it does not change the original purpose, intent, or design of the trail. The act of maintenance and repair includes, but is not limited to:

- Removal of debris and vegetation such as downed trees or broken branches in the trailway, clearing a trail of encroaching brush or grasses, and removing rock slides;
- Maintenance of the trail tread such as filling ruts and entrenchments, reshaping trail beds, repairing trail surfaces and washouts; installing rip rap (rock placed to retain cut and fill slopes), and constructing retaining walls or cribbing to support the trail tread;
- Erosion control and drainage, replacing or installing necessary drainage structures such as drainage dips, water bars, or culverts, and

realigning sections of trail to deter erosion or avoid boggy or marshy areas; and

• Repair of trail or trailhead structures, including replacing deteriorated, damaged, or vandalized parts of structures such as sections of bridges, boardwalks, information kiosks, fencing, railings, and painting or removing graffiti.

Where practicable and feasible, resource managers are encouraged to maximize the opportunity to improve accessibility on trails through trail maintenance and repair activities. Every time a trail is maintained, the opportunity to improve access is present.

Question 12: The committee recognized that the distinction between alterations and maintenance activities is as critical to picnic areas, campgrounds, and beaches as it is to trails. Although the previous discussion specifically refers to trails, the examples could be extrapolated to include other outdoor elements. How should alteration and maintenance activities be defined for picnic areas, campgrounds, and beaches, including outdoor recreation access and beach access routes?

Question 13: Should there be different construction tolerances for the outdoor environment? For example, should the construction tolerances be greater with respect to trails, picnic areas, camping facilities, and beach access routes than interior accessible routes? If so, how should those tolerances be defined?

Relationship Between Use of All Terrain Vehicles (ATVs) and the Proposed Accessibility Guidelines for Trails

During the committee deliberations, some individuals expressed concern that applying the proposed accessibility guidelines to trails in the ''back country'' or lesser developed portions of outdoor recreation areas would make it more difficult for public land managing agencies to appropriately manage the use of all terrain vehicles (ATVs) and off highway vehicles (OHVs) in these areas. One concern was that requiring land managing agencies to consider making trails in lesser developed areas accessible according to the proposed guidelines would make it more difficult to control and restrict where these types of devices may be used.

The proposed guidelines for trails address their design, construction, and alteration in the same manner that other accessibility provisions address fixed facilities. They are similarly based on the dimensions and use patterns of those assistive devices commonly referenced throughout the Board's guidelines. While in the outdoor environment it may be possible to encompass a wider variety of mobility enhancing equipment, the necessity of protecting the environment and maintaining the appropriateness of the setting might exclude certain devices, particularly ATVs or OHVs. That decision is reserved for the administrative agency or owner of the affected property and is beyond the scope of these guidelines.

Trails Used as Transportation Facilities (Shared Use Paths)

Many trails are used as non-motorized transportation facilities. Users may include bicyclists and skaters as well as pedestrians. These accessibility guidelines apply to these trails. However, bicyclists and skaters have design needs which exceed the minimum guidelines for trails. A trail designed only to meet the proposed accessibility guidelines for trails may not be adequate, and possibly hazardous for bicyclists or skaters.

The primary design guide for bicycle and shared use facilities is the ''Guide for the Development of Bicycle Facilities'' from the American Association of State Highway and Transportation Officials (AASHTO), 1999. The AASHTO Guide defines a ''shared use path'' as a facility on exclusive right-of-way and minimal cross flow by motor vehicles. Users generally include bicyclists, skaters, and pedestrians. (In areas with heavy snow, shared use paths may be used by cross-country skiers or snowmobilers.) A summary of how the AASHTO Guide relates to the proposed accessibility guidelines for trails is provided. In most cases, the AASHTO Guide requires a greater level of accessibility when designing trails for pedestrians, including bicyclists and skaters.

Shared use paths provide non-motorized transportation connections between neighborhoods and communities. They may be along old railroad corridors or rivers, or pass through parks. Shared use paths are usually separated from adjoining roadways or streets either by distance or a barrier, and are usually distinct from sidewalks. They generally have relatively few driveways or street crossings. A summary of how the AASHTO Guide relates to the proposed accessibility guidelines for trails is included below. Trails designed for recreational use by mountain bicyclists are not expected to meet AASHTO Guidelines.

COMPARISON OF AMERICAN ASSOCIATION OF STATE HIGHWAY AND TRANSPORTATION OFFICIALS (AASHTO) GUIDELINES FOR BICYCLE FACILITIES AND THE PROPOSED GUIDELINES FOR TRAILS

Outdoor developed areas accessibility guidelines	AASHTO guide for the development of bicycle facilities
T303.3 Surface: Firm and stable	Bicycles need the same firmness and stability as wheelchairs; skaters usually require a smooth, paved surface. Most shared use paths are paved, although crushed aggregate surfaces are used on some paths.
T303.4 Clear Tread Width: 36 inches (3 feet; 915 mm); exception for 32 inches (815 mm).	Shared use paths usually require a minimum 3 meter (10 foot) width, plus a 0.6 meter (2 foot) safety buffer on both sides. A 2.4 m (8 foot) width may be allowed in low use facilities. Posts or bollards installed to restrict motor vehicle traffic should be spaced 1.5 m (5 feet) apart. Posts or bollards should be brightly painted and reflectorized for visibility. When more than one post is used, use an odd number, with one on the centerline to help direct opposing traffic.
T303.5 Openings (Gaps): To prevent wheelchair wheels and cane tips from being caught in surface openings or gaps, openings in trail surfaces shall be of a size which does not permit passage of a ½ inch (13 mm) diameter sphere; elongated openings must be perpendicular or diagonal to the direction of travel; exception to permit parallel direction elongated openings if openings do not permit passage of a ¼ inch (6 mm) sphere; second exception to permit openings which do not permit passage of a ¾ inch (19 mm) sphere.	The AASHTO Guide does not specify a maximum dimension for a surface opening, but openings should be minimized. Openings should not permit a bicycle wheel to enter. Grates should be flush with the surface, and elongated openings should be perpendicular to the direction of travel (diagonal openings are more difficult for bicyclists to negotiate). Where openings are unavoidable, they should be clearly marked.

COMPARISON OF AMERICAN ASSOCIATION OF STATE HIGHWAY AND TRANSPORTATION OFFICIALS (AASHTO) GUIDELINES FOR BICYCLE FACILITIES AND THE PROPOSED GUIDELINES FOR TRAILS—Continued

Outdoor developed areas accessibility guidelines	AASHTO guide for the development of bicycle facilities
T322.1 Protruding Objects:T405 provide a warning if vertical clearance is less than 80 inches (2030 mm).	Protruding objects should not exist within the clear tread width of a shared use path. Vertical clearance on shared use paths should be a minimum of 3 m (10 feet) or the full clear width including safety buffers. Where vertical barriers and obstructions, such as abutments, piers, and other features are unavoidable, they should be clearly marked.
T303.6 Tread Obstacles (Changes in level, roots, rocks, ruts): Up to 2 inches (50 mm); exception up to 3 inches (75 mm).	Tread obstacles are hazardous to bicyclists and skaters. The surface of a shared use path should be smooth and should not have tread obstacles.
T303.7 Passing Space: At least 60 inches (1525 mm) width within 1,000 foot (300 m) intervals. Advisory recommends more frequent intervals for some trail segments.	Shared use paths should have a minimum clear width of 3 m (10 feet); exception for 2.4 m (8 feet).
T303.8.1 Cross Slope: 1:20 (5%) maximum; exceptions for open drains up to 1:10 (10%).	For drainage, shared use paths should have a minimum 2 percent (1:50) cross slope on a paved surface. On unpaved shared use paths, particular attention should be paid to drainage to avoid erosion. Curves on shared use paths may require super elevation beyond 2% (1:50) for safety reasons. The Guide suggests limited cross slope for accessibility reasons.
T303.8.2 Running Slope: 1:20 (5%), any length; 1:12 (8.33%), for up to 200 feet; 1:10 (10%), for up to 30 feet; 1:8 (12.5%), for up to 10 feet. No more than 30% of the total trail length shall exceed 1:12.	Running slopes on shared use paths should be kept to a minimum; grades greater than 5 percent are undesirable. Grades steeper than 3 percent may not be practical for shared use paths with crushed stone or other unpaved surfaces. Where terrain dictates, grade lengths are recommended as follows: <5% (<1:20), any length; 5–6% (1:20–16.7), for up to 240 m (800 feet); 7% (1:14.3), for up to 120 m (400 feet); 8% (1:12.5), for up to 90 m (300 feet); 9% (1:11.1), for up to 60 m (200 feet); 10% (1:10), for up to 30 m (100 feet); 11+% (1:9.1), for up to 15 m (50 feet).
T303.9 Resting Intervals: Size: 60 inch (1525 mm) length, at least as wide as the widest trail segment adjacent to the rest area. Less than 1:20 (5%) slope in all directions. Resting areas are required where trail running slopes exceed 1:20 (5%), at intervals no greater than the lengths permitted under running slope (see T302.6.2 above).	The Guide does not address resting intervals.
T303.10 Edge Protection: Where provided, 3 inch (75 mm) minimum height. Handrails are not required.	The Guide does not address edge protection. Some kinds of edge protection may be hazardous to bicyclists and skaters. The Guide has minimum railing height recommendations when needed for safety reasons.
T222 Trail Signs: Accessible trails require designation with a symbol of accessibility, and information on total length of the accessible segment. No traffic control sign information.	Guidance on signing and marking is provided in the Manual on Uniform Traffic Control Devices (MUTCD), incorporated by reference as a Federal regulation (23 CFR 655.601). A proposed amendment for Part 9 (Traffic Controls for Bicycle Facilities) was published in the **Federal Register** on June 24, 1999 (64 FR 33802).

The ''Guide for the Development of Bicycle Facilities'' is available through the American Association of State Highway and Transportation Officials (AASHTO), 444 North Capitol Street, NW., Suite 249, Washington, DC 20001, (202) 624–5800, fax (202) 624–5806, *https://bookstore.transportation.org/*

Section-by-Section Analysis

This section of the preamble contains a summary of the proposed accessibility guidelines for trails, outdoor recreation access routes, beach access routes, and picnic and camping facilities. The text of the proposed rule follows this section.

Chapter T1: Application and Administration

This chapter states general principles that recognize the purpose of the guidelines (T101), modification and waivers (T102), conventions (T103), and definitions (T104).

T102 Modifications and Waivers

The Architectural Barriers Act (ABA) authorizes certain agencies to grant a modification or waiver from the scoping and technical provisions upon a case-by-case determination.

T103 Conventions

All dimensions not stated as a ''maximum'' or ''minimum'' are absolute and are subject to conventional industry tolerances except where a range is provided. Rules are provided for calculations of percentages.

T104 Definitions

Definitions for ''alterations'' and ''facility'' have been added by the Board to this proposed rule and are based on definitions in the Architectural Barriers Act Accessibility Guidelines issued in 2004. The other definitions are from the regulatory negotiation committee's report.

The definition of ''beach access route'' and ''designated trailhead'', ''outdoor recreation access route'', and ''tread width'' are included as a part of the final report.

The term ''beach access route'' is defined as a continuous unobstructed path designated for pedestrian use that crosses the surface of the beach. Beaches can be found in three general aquatic environments: coastal areas, along rivers, and along lakes and ponds. Although the term ''beach'' is not defined, the committee broadly considered this to include designated areas along a shore of a body of water providing pedestrian entry for the purposes of water play, swimming, or other water shoreline activities. A beach access route is a designated path and different from an area where entry into the water is possible, but not provided.

A beach access route is a pathway over the surface of the beach itself, not the route leading to the edge of the beach surface. When a beach is fronted by a park or other outdoor developed area, the route over the surface to the edge and beginning of the beach surface may be considered an outdoor recreation access route addressed by section T204.

A ''designated trailhead'' is defined as a designated point of access that may contain parking areas, information kiosks, restrooms, water hydrants, and may be reached by vehicular or pedestrian access. A designated trailhead is a ''point of access'' to a trail intended for public use where information may be provided. The designated trailhead may include a vehicle parking area for the public to access the trail or may connect from a sidewalk or from a street or road in an area where pedestrian access from a nearby neighborhood may be expected. It does not include a junction between trails where there is no other access or a location where a trail crosses a road and public access from the road is not expected or is discouraged. It also does not include an access point not open to the public.

An ''outdoor recreation access route'' is a continuous unobstructed path designated for pedestrian use that connects accessible elements within a picnic area, camping area, or designated trailhead.

The term ''trail'' is defined as a route that is designed, constructed, or designated for recreational pedestrian use or provided as a pedestrian alternative to vehicular routes within a transportation system.

A trail designed, constructed, or designated for pedestrian use may also have other uses, such as bicycling or in-line skating. It is recognized that pedestrians use all trails. However, these guidelines apply only to trails where travel on foot is one of the designated uses for which the trail was created. For example, a trail designated for mountain biking will not be considered a ''pedestrian trail'' whether or not pedestrians actually use the trail. However, a multi-use trail specifically designed and designated for hiking and bicycling would be considered a pedestrian trail. Trails include, but are not limited to, a trail through a forested park, a shared-use path, or a back country trail. Trails do not include pathways such as sidewalks, pathways in amusement parks, commercial theme parks, carnivals, or between buildings on college campuses. These exterior accessible routes are already covered by the Architectural Barriers Act Accessibility Guidelines issued in 2004.

The accessibility guidelines for trails apply to those which are designed and constructed for pedestrian use. These guidelines are not applicable to trails primarily designed and constructed for recreational use by equestrians, mountain bicyclists, snowmobile users, or off-road vehicle (ORV) users, even if pedestrians may occasionally use the same trails. People use these categories of trails by means of transportation other than foot travel or personal mobility device. Design and construction requirements for equestrians, mountain bikes, ORVs, and snowmobiles are based on the specific requirements for the intended mode of transportation. For the safety of trail users, pedestrian use may not always be permitted on these trails in order to minimize conflicts between motorized and non-motorized recreation. These trails do not preclude use by a person with a disability since it is planned that all trail users would be using the one or more alternative means of transportation for which the trail is designed and constructed. The design and construction of pedestrian trails without consideration of these proposed guidelines, by contrast, could present barriers to some trail users because the intended use is by foot or personal mobility device. For these reasons, the committee intentionally limited the application of the proposed guidelines to pedestrian use trails.

The definition used in these proposed guidelines is not the only definition used by trail designers and managers. Rather, it was developed to specifically define the scope of these guidelines. Additionally, it is intended that trails and side trails leading to elements related to the trail, such as campsites and restrooms, should meet the accessibility guidelines for trails, not outdoor recreation access routes.

The term ''tread width'' is defined as the width of the usable trail tread measured perpendicular to the direction of travel and on or parallel to the surface of the usable trail tread. The minimum clear tread width is the narrowest measurement on the usable trail tread with respect to a specific trail segment. Clear tread width differs from clear width in that the latter is the amount of land potentially available for the trail.

Chapter T2: Scoping Requirements

Chapter T2 contains scoping provisions that specify which elements and spaces are required to comply with the technical requirements in Chapters T3 and T4.

T201 Application

This section provides that these guidelines apply to all newly designed and constructed trails, outdoor recreation access routes, beach access routes, and picnic and camping facilities and altered portions of existing trails that connect to an accessible trail or designated trailhead. The requirements apply to both permanent and temporary facilities. It is recognized that compliance with this section will not always result in facilities that will be accessible to all persons with disabilities. These guidelines recognize that often the natural environment will prevent full compliance with certain technical provisions.

T202 Additions and Alterations to Existing Facilities

This section requires that each addition to an existing facility comply with the requirements for new construction.

T202.3 Alterations

This section requires that where existing trails connecting to designated trailheads or accessible trails are altered, they shall comply with the requirements of Chapters T2 and T3. Committee members sought to limit the application of these guidelines where existing trails are not connected to a designated trailhead or an accessible trail. Further discussion is included under T203 Trails. The section also provides that where existing outdoor recreation access routes, beach access routes, and picnic and camping facilities are altered, each altered element or space must comply with the applicable requirements of Chapter T2. Additionally, an alteration is prohibited from decreasing or having the effect of decreasing the level of accessibility below the requirements for new construction or imposing a requirement for accessibility greater than that required for new construction.

Exception 1 addresses the circulation path to an altered element or space. Where the circulation path to the altered element or space is not altered, an outdoor recreation access route is not required.

Exception 2 addresses altered picnic and camping elements. Where picnic or camping elements are altered and the ground surface is not, the ground surface is not required to comply with provisions for clear space, surface slope, and accessible surfaces.

T203 Trails

This section requires that where trails connect to designated trailheads or accessible trails, they shall comply with T303. Where elements or spaces are

provided on trails complying with T303, they shall comply with the applicable requirements of Chapter T2.

Committee members were concerned about the application of these proposed accessibility guidelines to new and altered trails connecting to portions of existing trails. They were concerned about the development of newly constructed trails connecting to an existing trail, where it was highly unlikely that the existing portion could ever be made accessible. They were specifically concerned about newly constructed and altered trails in the ''middle of nowhere''. To address this concern, section T203 clarifies that the technical provisions apply only to newly designed and constructed trails, and altered portions of an existing trail that connects to an accessible trail or a designated trailhead. Where new trails connect to an existing trail that is not accessible, the technical provisions do not apply. Additionally, the technical provisions do not apply where the new or altered portion is not connected to a designated trailhead.

Section T203 also requires elements provided on trails to comply with the applicable requirements of Chapters T2 and T3. For example, if a bench is provided along a trail complying with T303, the bench must meet the applicable provisions of T313. Where elements are provided along trails, they are not required to be connected by an outdoor recreation access route.

Question 14: Where trails are not accessible, the committee could not agree on whether elements such as benches, picnic tables, or toilet rooms located on a trail should be required to be accessible. For example, an element such as a picnic table may be located on a trail too steep to be accessible. The committee considered how future and existing technology will allow assistive devices to get over more difficult terrain. The committee discussed options to minimize scoping (*e.g.*, one of each element) requirements or limit the requirement to certain elements such as sanitary facilities. Should elements located on inaccessible trails be required to be accessible?

The committee considered many different approaches to developing accessibility guidelines for newly constructed and altered trails. Each approach balanced accessibility with the uniqueness of the outdoor environment. The following are examples of the approaches considered for trails throughout the committee's deliberations.

- Requiring a percentage of the miles of trails provided to be accessible. Using this approach, it was agreed that some trails, such as paved urban and suburban transportation routes, should usually be accessible. But the committee could not agree on the types of trails, other than the type mentioned above, that should be accessible and to what percent. The committee determined that this approach would be too arbitrary and too difficult to follow.
- Requiring a percentage of the total number of trails to be accessible. The committee could not agree on a percentage. A significant issue was the difficulty in separating existing trails and new trails when determining the total number of trails.
- Dividing trails into different categories (*i.e.*, front country and back country) and requiring certain accessibility guidelines to be followed. The committee could not agree on the categories, nor could it agree that a trail in one category would always be different than a trail in another category. A concern was that only ''easy'' trails would be made accessible, thereby eliminating the ability for people with disabilities to use more difficult trails.
- Requiring a certain level of access dependent on the location of the trail in terms of the type of setting (*i.e.*, highly developed, moderately developed, or minimally developed). Definitions must be agreed to and understood by the trails community, people with disabilities, and land management agencies that are a part of the Federal government. The committee could not find acceptable definitions for a ''settings'' approach.

Committee members evaluated each approach through extensive discussion and analysis. Within each proposal, the committee weighed the balance between accessibility and the uniqueness of the outdoor environment. Trails are often designed for a certain experience, or for the user or types of use within the setting. Primitive or back country trails for example, are usually found in remote locations or in a natural state with limited development. Throughout the discussions, committee members were concerned that providing access would change the experience or result in a significant environmental impact. Even providing accessible trails in a highly developed setting raised concerns that all trails would begin to look alike. Committee members did not want the proposed guidelines to impede the creativity of planners or designers.

As this discussion evolved, some concerns common to each approach arose regarding the potential impact on the natural environment. The committee attempted to clarify and define these concerns so that all involved could agree. The result is that section T302 defines four conditions where trail construction projects can depart from the technical provisions. This departure is allowed for the duration of the existence of the condition, or unless the condition is such that it makes it impractical to make the remainder of the trail accessible.

When designed and constructed, an accessible trail is a trail that meets the technical provisions included within these proposed guidelines. It is also considered accessible where one of the exceptions within the technical provisions is used to address a specific condition. This is limited to certain exceptions, and does not include those that allow for departure from the entire provision based on the conditions in T302.

T204 Outdoor Recreation Access Route

An outdoor recreation access route is a continuous unobstructed path designated for pedestrian use that connects accessible elements within a picnic area, camping area, or designated trailhead. Outdoor recreation access routes do not include pathways such as sidewalks, pathways in amusement parks, visitor centers, commercial theme parks, or carnivals and between buildings on college campuses already addressed by the Architectural Barriers Act Accessibility Guidelines issued in 2004.

Outdoor recreation access routes are required to connect elements required to be accessible. For example, where a cooking grill and a picnic table are provided in an accessible camp site, the outdoor recreation access route is required to connect these elements. Elements such as benches or picnic tables located along a trail, however, are not required to be connected by an outdoor recreation access route.

At least one outdoor recreation access route must connect accessible elements and spaces within the area. Five exceptions are added to this provision. Elements located on trails are not required to be connected by an outdoor recreation access route. Where multiple picnic tables, fire rings, cooking surfaces or benches are provided, at least 40 percent (of the accessible elements), but not less than two, must be located along an outdoor recreation access route. For example, if ten picnic tables are provided in a picnic area, T206.2.2 requires five tables to be accessible. Of the five tables required to be accessible, 40 percent, or two, would need to be located along an outdoor recreation access route.

In the outdoor recreation environment, the natural terrain often

presents a real obstacle. Although this would not affect the accessibility of elements such as picnic tables and fire rings, it could impact getting to them. The committee realized that in many areas, it might not be possible to locate all accessible elements along an outdoor recreation access route. Rather than decreasing the number of accessible elements, the decision was made to reduce the scoping for outdoor recreation access route connections. While some committee members wanted all accessible elements to be located along an outdoor recreation access route, other committee members felt that would be unrealistic in the outdoor environment given constraints of the natural terrain. The committee finally reached consensus on requiring 40 percent of the accessible elements to be located along the outdoor recreation access route.

T205 Beach Access Routes

Section T205.2 addresses the location of beach access routes. Beach access routes shall coincide with or be located in the same area as general circulation paths.

The proposed accessibility guidelines for beaches include two scoping provisions. Section T205.2 addresses new beaches and section T205.3 addresses existing beaches. A ''new beach'' refers to sites where a beach is created through the importation of sand or other beach surface to create a new beach where none previously existed. The proposed guidelines treat ''new beaches'' differently from ''existing beaches''. A beach access route is required in new construction. The committee agreed that the opportunity to provide access is greater with a newly constructed beach. The committee also considered the option of a scoping requirement based upon the volume of new beach created, but due to the difficulty in measuring a changing volume of sand, did not include that option.

Section T205.2 requires that where a new beach is constructed, a minimum of one beach access route must be provided for every one half mile of linear feet of new beach. The committee considered that one half mile was a reasonable distance between beach access routes on a new beach.

Question 15: Comment is sought on the impact of constructing a beach access route every ½ mile along a new beach. If this distance is not appropriate, other specific distances are requested.

Question 16: The committee outlined several exceptions to the application of the technical provisions for beach access routes in T305. Comment is sought about whether there are any other situations for which site infeasibility would preclude compliance with the technical provisions for a beach access route. If so, are there specific technical provisions (T305) where departures may be necessary due to site constraints?

Section T205.3 addresses beach access routes for an existing beach. Where a pedestrian route is provided from a developed site to the edge of an existing beach surface, a beach access route must be provided. This provision addresses a situation when an entity decides to construct a pedestrian route which is used by everyone to access a beach. In that situation, the action will trigger an obligation to address access for persons with disabilities. The committee did not limit the obligation to only when an entity constructs a path perpendicular to a beach edge because few such paths are developed. The committee also intended to include pedestrian sidewalks or boardwalks along the beach as ''pedestrian routes'' to the edge of an ''existing beach.''

Question 17: The committee considered beach sites where constructed parking spaces or a parking lot is provided adjoining the beach. Should the provision of constructed parking spaces adjoining the beach, trigger a beach access route? If so, should the trigger be based on the number of parking spaces or some other measure?

The committee discussed several options and decided that the obligation to provide a beach access route over the surface of the beach would be triggered when a pedestrian access route to the edge of the beach surface is provided. The committee recognized that this would obligate an entity to extend a path further than they might have originally intended. However, the committee felt strongly that a developed path which ends at the edge of the beach surface would be of little use to a person with a disability who wishes to traverse the beach itself. They also believed that this requirement was reasonable since the provision allows the beach access route to be either temporary or permanent. Designers and operators can decide the type of route appropriate given the different environments. The committee determined that the beach route would be required to the same point appropriate for an ocean, river, lake, or reservoir.

Several exceptions are permitted for routes on existing beaches. Exception 1 permits the use of a ''temporary'' beach access route where one is required. The committee believed that requiring a permanent structure was far too restrictive from a design or environmental perspective. In particular, constraints of the environment may limit or preclude the construction of permanent structures. Permanent structures may also require additional permits in coastal and shoreline areas. Wave action can also cause significant erosion which can shortly turn a permanent structure into a hazard. Therefore, entities can choose to use a temporary structure for administrative and operational reasons. Vehicular access or access provided by an assistive device would not meet the technical provisions of a beach access route. While these options may enhance access to the beach for persons with disabilities, they are not considered alternatives to providing a beach access route. The committee intended that temporary beach access routes be in place during all hours where the public has access to the beach.

Exception 2 exempts routes created solely for shoreline maintenance from complying with T205. The committee recommended exempting those routes which are strictly established for shoreline maintenance personnel, particularly if accessed by a vehicle.

Exception 3 exempts routes created solely as undeveloped public easements from complying with section T205. The committee recommended an exemption if a ''route'' is merely an open public easement and right of way, an undeveloped space or opening created between developments where a developer leaves space open under the requirements of State or local laws for shoreline access.

Exception 4 exempts a beach access route from being required where another beach access route exists within one-half mile and is within the beach of the same jurisdiction. The committee recommended that if a beach access route already exists to the beach in close proximity, there should be no requirement to create another beach access route. The committee considered one-half mile to be a reasonable distance so long as the existing beach route is served by the same beach. This is similar to the philosophy that all entrances into the same building do not have to be accessible. The one-half mile is also consistent with the requirement for scoping for a second route with construction of a new beach.

Exception 5 distinguishes beach replenishment from alterations. Nourishment is the process of replenishing a beach. While it can occur naturally with the depositing of sand from wave action, it is more commonly

accomplished artificially by mechanically depositing sand on the beach. A beach may completely erode before it is artificially nourished, or it may be nourished on a periodic schedule to maintain the desired amount of beach for use or to act as a barrier for adjoining buildings and facilities. Exception 5 permits the process of beach nourishment without triggering the alteration provision. The committee did not believe that such activities should trigger any obligations for a beach access route over the surface of the beach.

Question 18: Comment is sought on whether there is a need to distinguish between certain beach nourishment projects. Should certain beach nourishment activities or projects trigger the requirements of a beach access route? If so, how should these projects be identified or defined?

Exception 6 provides an exception where the pedestrian route which is developed along the edge of an existing beach is elevated higher than 6 inches above the beach surface. This exception is intended to address those situations where a lengthy pedestrian route such as a sidewalk fronts the length of a beach and the route is elevated higher than 6 inches. The committee recognized that those areas would be drop-offs where the creation of a beach access route would require 6 feet of ramp to be constructed to meet the beach surface.

T206 Picnic Tables

Section T206.2.1 requires that where one fixed picnic table is provided in a picnic area, it must be accessible. The table must also be located along an outdoor recreation access route. This provision is included in order to ensure that a picnic area with only one table is accessible to and usable by people with disabilities. If only one table is provided, and it is not accessible, people with disabilities would not have the option of choosing another table. This provision applies only to picnic tables that are ''fixed'' to the ground, (*i.e.*, permanently attached such as by a chain from the table to a concrete footing below ground).

Section T206.2.2 requires that where two or more picnic tables are provided in a picnic area, at least 50 percent, but no less than two, must be accessible.

Some committee members initially proposed 100 percent scoping, requiring all tables to be accessible. Other members considered 100 percent too high and more than what is required for the built environment. After much debate, committee members agreed that 50 percent scoping would adequately accommodate the demand for accessible tables. Committee members considered this to be realistic and feasible for most outdoor recreation providers, and would result in a higher number of accessible tables in smaller picnic areas.

The proposed scoping provision addresses picnic tables located in an ''area.'' An ''area'' refers to a designated location where picnic related elements are located. For instance, a picnic ''area'' is a designated location where picnic related elements are located. Areas may be separated and include different settings on the same site. For example, a picnic area located next to a lake in a park is considered a separate picnic area from a pavilion with numerous picnic tables within the same park. Picnic ''areas'' may also be separated and designated by a name or connected to a separate entrance road.

Section T206.3 requires accessible tables to be dispersed among the various types of picnic settings or opportunities provided. For example, a particular picnic area may offer picnic sites near the lake, in the woods, or in the open sunny portion of the area. This provision requires that the number of accessible tables be distributed throughout the area, so that people with disabilities would have a choice of picnic locations similar to what other visitors to the area have. This section would not increase the total number of accessible tables required in T206.2.

Section T206.4 addresses wheelchair spaces and requires at least one wheelchair space at an accessible picnic table. Where the table top perimeter exceeds 24 linear feet, the number of wheelchair spaces must comply with Table T206.4. More wheelchair spaces would be required where the perimeter of the table top (not including the bench) exceeded 24 linear feet. The location of the wheelchair space(s) would be left to the discretion of the designer, although an advisory note (T306.2) recommends that the wheelchair spaces be dispersed rather than clustered in one location.

Committee members discussed the issue of wheelchair spaces at length, finally basing the number of spaces on an average table dimensioned at ten-feet long by 2 and one half feet wide. Such a table has a perimeter of 25 linear feet and is designed to accommodate up to ten people. The committee decided tables of that size should provide two wheelchair spaces, while smaller tables should only require one space. Tables with a perimeter of 45 to 64 linear feet (*i.e.*, two ten-foot long tables joined together) would require three wheelchair spaces. Tables with 65 to 84 linear feet would require four wheelchair spaces, and so on.

T207 Fire Rings

Section T207.2.1 requires that where only one fire ring is provided in an area, it must be accessible.

Section T207.2.2 requires that where two or more fire rings are provided in an area, at least 50 percent, but not less than 2, must be accessible.

Section T207.3 requires that the accessible fire rings be located throughout an area and be dispersed among the types of fire rings, if different styles or designs are provided. For example, a picnic area may provide fire rings without cooking surfaces (*i.e.*, for camp fires only) and some with cooking surfaces. In addition, the area may offer sites nestled in the trees, some near the water, and others in open meadows. This section would require that accessible fire rings be available in both types and distributed among the different sites, affording people with disabilities the similar choice of fire ring location that is available to other visitors. This provision does not require an increase in the total number of accessible fire rings.

T208 Cooking Surfaces, Grills, and Pedestal Grills

Section T208.2.1 requires that where only one cooking surface, grill, or pedestal grill is provided in an area, it shall comply with section T308. Section T208.2.2 requires that where multiple cooking surfaces, grills, or pedestal grills are provided in an area, 50 percent, but not less than two, shall comply with T308. The rationale for this provision is consistent with picnic tables (T206), fire rings (T207) and other outdoor elements.

Section T208.3 requires accessible cooking surfaces, grills, and pedestal grills to be dispersed throughout the area and among the types provided. For example, if a picnic area offers different types of cooking surfaces, the total number of accessible cooking surfaces is to be distributed among the different types provided. This provision would not increase the number of cooking surfaces, grills, or pedestal grills required to be accessible.

T209 Trash and Recycling Containers

Section 209.1 requires each trash or recycling container to be accessible. The committee considered this to be a health issue making it imperative that each container meet the provisions for accessibility. This requirement is compatible with those for other singly occurring elements in an outdoor setting, as well as providing consistency

with the Architectural Barriers Act Accessibility Guidelines. An exemption is provided where the container has one or more compartments. In this case, 50 percent of the compartments must be accessible. The committee determined that this requirement would assure the user of finding at least one accessible compartment in a multi-bin container.

T210 Wood Stoves and Fireplaces

Section T210.1 requires each wood stove and fireplace to be accessible.

T211 Overlooks and Viewing Areas

Section T211.1 requires each viewing area, where provided, on designated overlooks to be accessible.

Overlooks and viewing areas are specifically designed and constructed to provide an unobstructed observation of a vista or to a specific point of interest, such as the view to a mountain range or down into a valley or to a waterfall or geologic formation. As such, they are a destination for the user and should be accessible. An exception permits a minimum of one of each viewing opportunity for distinct points of interest where multiple viewing areas are provided.

T212 Telescopes and Periscopes

Section T212.1 requires that when telescopes or periscopes are provided, 20 percent, but never less than one, telescope or periscope must be accessible. Where only one telescope or periscope is provided, it must be usable from the seated position and also be usable from the standing position. This configuration will provide accessibility and usability.

Viewing areas or overlooks are sometimes equipped with mounted telescopes and less often with periscopes. The purpose of these elements is to provide the visitor with an even closer view of a distinct point of interest (rather than a vista).

Many existing sites only provide scopes usable from a standing position. This does not accommodate the needs of people using wheelchairs, children, or people of shorter stature. The committee made specific mention of children when discussing scopes, based on experiences of having to lift children to use scopes. Lifting may not be possible for people with back difficulty or insufficient strength.

T213 Benches

Section T213.2.1 requires that where only one bench is provided, the bench must be accessible. The committee felt that it was important that where only a single bench is provided, it must be usable by all visitors. This is generally consistent with the Architectural Barriers Act Accessibility Guidelines and with the other elements of this section. The single bench must have at least one armrest to facilitate its use.

The committee recognized that benches, when provided, are key elements in many outdoor settings, such as picnic areas or day use areas. They are used for a variety of purposes, including places of rest or relaxation, meeting spots, and places from which to view events such as sporting activities. Whatever the use, the committee determined that the bench or benches, where provided, should be accessible. However, benches that are part of an assembly area are not addressed and are not required to meet these provisions.

Section T213.2.2 requires that where multiple fixed benches are placed in an area, at least 50 percent must be accessible. This assures the visitor that there will be at least one bench available which is accessible. Further, of the benches that are required to be accessible, 50 percent must provide an armrest. The committee felt that visitors should be provided with a choice of bench configurations that will accommodate different needs. An armrest provides support when occupying the bench and assists in transfer to or from the bench.

Section T213.3 requires dispersal of accessible benches. This provision does not require an increase in the total number of accessible benches. The dispersion of accessible benches throughout an area provides for a variety of settings and is consistent with other provisions in the Architectural Barriers Act Accessibility Guidelines.

T214 Utility Sinks

A utility sink is a sink that has a vertical dimension deeper within the confines of the sink than a standard lavatory basin, and allows the user of a picnic area or campground setting to clean large pots or equipment.

Section T214.1 requires that where utility sinks are provided, at least 5 percent, but not less than one, must be accessible.

T215 Mobility Device Storage Facilities

The committee addressed the need for storage space for mobility devices primarily where an individual using a wheelchair or other mobility device must transfer to another device or vehicle in order to take advantage of the services or programs offered at the outdoor facility. A ski facility where individuals may use an adaptive ski to participate, is an example where this type of element may be provided. The committee believed that where storage facilities are provided to protect from environmental effects or theft or vandalism, at least one storage facility must comply with T315.

T216 Pit Toilets

Pit toilets are very primitive outhouses, and may consist simply of holes dug in the ground covered by a toilet riser. The riser may or may not be surrounded by walls and a roof. Pit toilets are generally located in remote, undeveloped areas, and are provided primarily for resource protection rather than visitor convenience and comfort. Pit toilets may be permanent installations, or may be moved from one location to another as the hole is filled. These provisions apply to fixed pit toilets.

Section T216.1 requires each fixed pit toilet to be accessible, since usually only one pit toilet is provided in an area. This scoping is consistent with what would be required for other individually occurring elements.

T217 Utilities

Section T217.1 requires utilities such as electric, water, sewage, and other similar types of utilities serving accessible elements or spaces to also be accessible.

T218 Camping

Section T218.2 requires camping spaces (*e.g.,* recreational camping vehicle or trailer spaces, tent camping spaces, camping shelters, or tent pads and tent platforms), where provided, to be accessible in accordance with Table T218.2. Table T218.2 provides the number of accessible camping spaces and is based on the total number of spaces provided.

Modifications were made to the existing transient lodging scoping in the Architectural Barriers Act Accessibility Guidelines to create higher numbers of accessible camping spaces in the low range and more accessible campsites in each of the three basic camping styles. Each camping style category must achieve the proper scoping independently of the others.

The proposed scoping provisions require higher accessibility where lower numbers of features are provided. This was extensively debated among committee members and is intended to address the higher probability of utilization where low numbers of elements are provided. As an example, the chance of two picnic tables being occupied at the same time and place is much higher than five picnic tables being occupied at the same time, even though the demand may increase

proportionately to the number of tables offered.

This section divides campsites into three categories: Recreational Camping Vehicle or Trailer Spaces, Tent Spaces, and Camping Shelters and Additional Campground Spaces. Campsite use requires specific equipment and a specially designed area may not be suitable for every use. For example, if someone comes prepared to use a tent, they may not be able to use a paved recreational camping vehicle site.

Section T218.2 also addresses other camping elements provided in accessible camping spaces. To ensure usability, all elements that are provided as a part of an accessible campsite must meet the applicable provisions of Chapters T2 and T3. All elements provided in accessible campsites must be accessible.

Section T218.2.1 requires recreational vehicle spaces or trailer spaces to comply with Table T218.2. An exception is included where camping spaces are designed for both tent camping and recreational camping vehicle or camping trailer use. In this case, at least 50 percent of the accessible multi-use spaces must be 20 feet wide minimum and the remainder are permitted to be reduced to 16 feet wide minimum.

Section T218.2.2 requires that where camping spaces are designed for use for tent camping and camping shelters, accessible tent and camping shelter spaces shall comply with T318.2.2, T318.2.4, and T318.3.

Section T218.3 addresses general use parking areas. Where recreational camping vehicle spaces or trailer spaces are provided, at least one must comply with T318.2.3 and T318.2.4. Accessible recreational camping vehicle spaces or trailer spaces in general parking areas are necessary to accommodate short-term parking needs. The exception separates campsite parking from general parking. This requirement provides a special recreational camping vehicle parking space in addition to the current Architectural Barriers Act Accessibility Guideline scoping for parking areas.

T219 Warming Huts

Section T219.1 requires each warming hut to have a turning space that complies with T402. Where doors are provided, they must comply with T408.

T220 Outdoor Rinsing Showers

Section T220 addresses outdoor rinsing showers. The committee recognized that provisions for shower stalls already existed. However, the provisions are clearly intended for indoor facilities. Some provisions (grab bars and a seat) may not be applicable for an outdoor shower stall or rinsing shower typically found at a beach or at camping facilities. Outdoor rinsing showers are not typically designed with walls like other showers in the built environment. Therefore, the committee recommended that specifications for an outdoor shower be developed. In order to distinguish this type of shower from those already addressed, the committee used the term ''outdoor rinsing shower''. An advisory note has been added to further identify what is considered a rinsing shower.

Section T220.2 addresses the minimum number of accessible outdoor rinsing showers. The committee examined several ways to scope showers, considering a percentage formula, a chart similar to parking or telephones, and a minimum number. Because the committee ultimately recommended two types of outdoor rinsing showers, a low and high version, the committee recommended that a minimum number, one of each type, be accessible where rinsing showers are provided. If only one is provided, it must be a dual shower.

T221 Signs

Section T221.1 requires signs on accessible trails and trail segments to be designated with a symbol at the trail head or designated access points.

Section T221.2 requires signs on accessible campsites by using the International Symbol of Accessibility (ISA). Identification of accessible campsites by the ISA was determined to be necessary where campsite occupancy and site selection is made by users and is based on a first come, first served basis. To accommodate campground operations that assign sites either through a reservation service or upon arrival, the ISA is not required and an exception is provided to accommodate this distinction. It was determined that site assignment would create better utilization of accessible sites than the use of ISA signage. Signage is also not required where all sites are accessible.

T222 Protruding Objects

Section T222.1 requires protruding objects on trails, outdoor recreation access routes, and beach access routes to comply with T405 and to have 80 inches minimum clear head room.

Chapter T3 Technical Provisions

Chapter T3 contains technical provisions for features required to be accessible in Chapter T2.

T302 Conditions for Exceptions

Section T302 sets out four conditions under which exceptions from certain technical provisions are permitted. Each technical provision must be examined individually to determine whether an exception from that provision is permitted. This section does not provide an overall exemption of the entire trail or outdoor element. When an exception is permitted, the proposed guidelines specifically provide an exception to the respective technical provision. This is essential as the outdoor environment is very different than a constructed indoor environment. Factors which influence the ability to provide fully accessible facilities such as soil, surrounding vegetation, hydrology, terrain, and surface characteristics, are fundamental to the outdoor area. Where trails are concerned, the committee recognized that without the opportunity to permit exceptions from the technical provisions, compliance may significantly alter the nature of the outdoor experience.

The conditions in T302 do not obviate or limit in any way the obligation to comply with the technical provisions in Chapter T3 at any point where the conditions do not apply. When the condition for an exception no longer exists, the technical provisions apply. For example, the clear width of a trail tread may be reduced because of a significant natural feature. Once the trail passes this feature, the technical provisions for width shall apply. This approach also applies when designing certain outdoor elements also included in this section. The conditions that permit exception from specific technical provisions are described below.

Condition 1. Compliance Would Cause Substantial Harm to Cultural, Historic, Religious, or Significant Natural Features or Characteristics

A significant natural feature may include a large rock, outcrop, tree, or a water feature which would block or interfere with trail construction or would be directly or indirectly altered or destroyed by construction of the trail to the extent that the trail could not, at that point, be made accessible. This includes areas protected under Federal or State laws, such as areas with threatened or endangered species or designated wetlands that could be threatened or destroyed by full compliance with the technical provisions. It also includes areas where compliance would directly or indirectly substantially harm natural habitat or vegetation.

Significant cultural features include areas such as archaeological sites, sacred lands, burial grounds and cemeteries, and Indian tribal protected sites. Significant historical features include properties on or eligible for the National Register of Historic Places or other places of recognized historic value. Significant religious features include Indian sacred sites and other properties designated or held sacred by an organized religious belief or church.

Condition 2. Compliance Would Substantially Alter the Nature of the Setting or the Purpose of the Facility, or Portion of the Facility

This condition includes trails intended to provide a rugged experience such as a cross country training trail with a steep grade or a challenge course with abrupt and severe changes in level. If these types of trails were flattened out or otherwise constructed to comply with the technical provisions for accessible trails, they would not provide the intended and desired level of challenge and difficulty to users. Trails that traverse over boulders and rocky outcrops, are another example. The purpose of such trails is to provide people with the opportunity to climb the rocks. To remove the obstacles along the way or reroute the trail around the rocks would destroy the purpose of the trail. The nature of the setting may also be compromised by actions such as widening a trail through the use of imported surfaces in a remote location or removing ground vegetation in meadows or alpine areas.

Trails and other outdoor elements such as picnic and camping areas are designed to provide a particular opportunity for the user. Throughout the discussions regarding these outdoor elements, many committee members were concerned that complying with the technical provisions could change the nature of some recreation opportunities. Further, compliance could negatively impact the unique characteristics of the natural setting, the reasons why people choose to recreate in the outdoors rather than an indoor environment. People using primitive trails or camping areas, for example, often experience the outdoor environment in a more natural state with limited or no development. Evidence of manufactured building materials or engineered construction techniques in such a setting can change its primitive character, and therefore, the user's experience. In these settings, people are generally looking for a higher degree of challenge and risk where they can use their outdoors and survival skills. Compliance with the technical provisions, particularly those related to surface and obstacles, could destroy the ''natural'' or ''undeveloped'' nature of the setting. This condition addresses these concerns.

Condition 3. Compliance Would Require Construction Methods or Materials That Are Prohibited by Federal, State, or Local Regulations or Statutes

Federally designated and some State designated Wilderness Areas prohibit use of mechanized equipment, limiting construction methods to hand tools. Imported materials may be prohibited in order to maintain the integrity of the natural ecosystem. Construction methods and materials employed in designated wetlands or coastal areas are also strictly limited. For traditional, historic, or other reasons, many trails are built using only the native soil for surfacing, which may not be firm and stable. Federal statutes such as the Wilderness Act and the Endangered Species Act, and State and local statutes often impose restrictions to protect or address environmental concerns. Many aquatic features are protected under Federal or State laws. Some constructed water crossings, which would be required to provide accessibility, may not be permitted under certain laws or regulations.

''Local regulations and statutes'' have been included to address conditions where ''conservation easements'' or ''development rights'' programs have prohibited or restricted construction methods and practices. For example, where land is purchased from farms, certain use restrictions may prohibit the importation of surfacing. On the other hand, local regulations or statutes may not be developed or initiated with the sole purpose of prohibiting use by people with disabilities. For example, initiating a new local regulation that arbitrarily restricts trail width to a dimension that would not allow passage of wheelchairs or other mobility devices from accessing a trail, is not permitted under this condition.

Condition 4. Compliance Would Not Be Feasible Due to Terrain or the Prevailing Construction Practices

Complying with the technical provisions, particularly running slope, in areas of steep terrain may require extensive cuts or fills that would be difficult to construct and maintain, or cause drainage and erosion problems. Also, in order to construct a trail on some steep slopes, a trail may become significantly longer causing a much greater impact on the environment. Certain soils are highly susceptible to erosion. Other soils expand and contract along with water content. If compliance requires techniques that conflict with the natural drainage or existing soil, the trail would be difficult, if not impossible to maintain. This condition may also apply where construction methods for particularly difficult terrain or the presence of an obstacle would require the use of equipment other than that typically used throughout the length of the trail. One example is requiring the use of a bulldozer to remove a rock outcropping when hand tools are commonly used.

Several of these conditions for departures are consistent with other exceptions for trails. For example, it may be impracticable in new construction to follow these provisions where soil and terrain pose obstacles which cannot be remedied. Compliance with the provision for a firm and stable surface might conflict with the prevailing construction practices by requiring the importation of a new surfacing material that would otherwise not have been used. For example, if the prevailing construction practices would not include the importation of a new surface material and the natural surface material could not be made firm and stable, the trail may not be able to comply with that specific provision.

The term ''not feasible'' is used in this situation to specify what is ''reasonably doable''. It does not refer to the technical feasibility or possibility of full compliance with the technical provisions. For example, it may be feasible to provide a trail with a 1:20 slope or less up a 1,500 foot tall mountain using heavy construction equipment, but the trail would be at least 5.8 miles long (rather than 2 miles long under a traditional back-country layout), and may cause inappropriate environmental and visual impacts. The intent of this conditional departure is to recognize that the effort and resources required to comply would not be disproportionately high relative to the level of access created. Although technically feasible, the effort and resources required are not ''reasonable.''

Trail construction practices vary greatly, from the use of volunteer labor and hand tools, to professional construction with heavy, mechanized equipment. For alterations to an existing trail, the ''prevailing construction practices'' are defined as the methods typically used for construction or maintenance of the trail. For new trails, it is recognized that the land manager determines the construction practices to be used on each trail. However, the choice of construction practices is primarily determined by the available resources (*e.g.*, machinery, skilled

operators, finances) and the environmental conditions (*e.g.*, soil type and depth, vegetation, natural slope). The intent of this condition is to ensure that compliance with the technical provisions does not require the use of construction practices which are above and beyond the skills and resources of the trail building organization. It is not intended to automatically exempt a trail from the technical provisions simply because of a particular construction practice, (*e.g.*, the use of hand tools or to suggest that hand tools should be used to avoid compliance) when more expedient methods and resources are available.

Where specified, the presence of the conditions in T302 may also prevent full compliance with some of the technical provisions for elements in picnic, camping, and beach facilities. While the conditions for departures may be more limited with these outdoor elements, the committee included the option for exceptions based on the conditions in several provisions. In most cases, these are limited to technical provisions for clear floor or ground space, surface slope, and accessible surfacing.

Where designers or operators apply an exception from a specific technical provision because of one or more of the conditions, the other technical provisions should be applied. For example, a significant cultural feature may prohibit a 36 inch trail tread width. However, all other provisions could be met because they would not be affected by the condition.

T303 Trails

T303.2 General Exceptions

The committee realized that there may be situations where the combination of factors and conditions may make it impractical to make the entire portion of the trail accessible according to the technical provisions. Two general exceptions in section T303.2 were developed to address these situations. First, where one or more of the conditions in T302 applies and where one or more of the conditions in this general exception applies, the trail is not required to be accessible after the first point of departure. The segment of the trail between the designated trailhead and the first point of departure is required to be accessible unless the trail segment is 500 feet or less in length. If the trail segment connects to a prominent feature less than 500 feet from the designated trailhead, it is required to be accessible between the trailhead and the prominent feature. The general exceptions are based on these conditions:

- The combination of running slope and cross slope exceeds 40 percent for over 20 feet; or,
- A trail obstacle 30 inches or more in height is across the full tread width of the trail; or,
- The surface is neither firm nor stable for a distance of 45 feet or more; or,
- A clear trail width is less than 12 inches for a distance of 20 feet or more; or
- The trail is not required to comply with any of the technical provisions in T303 for more than 15 percent of the length of the trail.

The 15 percent threshold in the last condition is a compromise, negotiated to balance the resources and environmental impact with the practicality of providing meaningful access on trails. The committee recommends that trail designers and managers attempt compliance with all technical provisions throughout the full length of the trail.

Section T303.3 requires the surface of accessible trails to be firm and stable. The ''slip resistance'' requirement typically required for accessible surfaces was not included because slip resistance cannot be guaranteed in an outdoor environment. Weather conditions (rain, snow, or ice) will affect slip resistance. For example, natural or non-hardened surfaces may not be slip resistant. Slip resistance may also be difficult to control when leaves and other surface debris caused by natural erosion accumulate on the surface.

The means and materials used to establish accessible exterior surfaces are plentiful. Crushed stone, fine, packed soil, and other natural materials can provide a firm and stable surface. Natural materials bonded with synthetic materials can provide the required degree of stability and firmness. An advisory has been added to provide additional information concerning accessible exterior surfaces. An exception is permitted from this provision where one or more of the conditions in T302 exist.

Section T303.4 requires the clear trail tread width to be 36 inches minimum. Exception 1 permits the clear trail tread width to be reduced to 32 inches minimum where one of the conditions in T302 applies. Exception 2 permits departures from T303.4 where a 32 inch minimum width cannot be provided because one of the four conditions in T302 exists.

Section T303.5 requires openings in trail surfaces to be of a size that does not permit the passage of a ½ inch diameter sphere. Elongated openings must be placed so that the long dimension is perpendicular or diagonal to the dominant direction of travel. Exception 1 permits elongated openings to be parallel to the dominant direction of travel where the opening does not permit passage of a ¼ inch diameter sphere. This is necessary to allow trail managers to place boards lengthwise along a boardwalk trail to reduce the environmental impact such as on a wetland area. Exception 2 permits openings that do not permit passage of a ¾ inch diameter sphere where at least one of the conditions in T302 applies. Exception 3 exempts trails from the provisions of T303.5 where openings that do not permit passage of a ¾ inch diameter sphere are not feasible because at least one of the four conditions in T302 apply.

A ¾ inch spacing is permitted through an exception since many trails use wood plank decking or boardwalks to cross wet, sandy, rocky, or environmentally sensitive areas. The planks expand and contract because of weather conditions. The boardwalks may need more than ½ inch spacing between the planks to permit expansion and to allow water to drain.

Section T303.6 requires that any tread obstacles shall not exceed 2 inches maximum in height. Exception 1 permits a 3 inch obstacle where the running and cross slopes are 1:20 or less. Exception 2 permits obstacles greater than 3 inches where at least one of the conditions in T302 applies. The committee recognized that natural features such as rocks, roots, and ruts may require a greater obstacle height than what is permitted in the indoor environment. Some wheelchairs used in an outdoor environment are designed to handle obstacles of these heights. However, trails used by bicyclists or in-line skaters or which serve as alternate transportation routes for sidewalks should be smooth with no abrupt changes in level.

Section T303.7 requires passing space where the clear tread width of the trail is less than 60 inches. Passing space is required at intervals of 1,000 feet maximum. Either a T-shape or a turning circle is permitted. An advisory states that the passing space may be located to one side of the trail. An exception is permitted from this provision where passing space cannot be provided because at least one of the four conditions in T302 exists.

The committee negotiated various intervals for passing space, ranging from 200 feet to no requirement. Those favoring longer intervals or no requirement explained that the outdoor

environment often allows users to move off the trail tread without involving trail construction (as opposed to being restricted by walls within a building). There was concern about having an unrealistic construction requirement in a natural setting, and concern that requiring a constructed passing space at more frequent intervals may be unnecessary where few users are on a trail at the same time. An advisory is added recommending that trails expected to have high use and trails with long sections where it is not possible to move off the trailhead (e.g., boardwalks in a wetland) should consider more frequent passing spaces, especially close to the trailhead.

Section T303.8 addresses both the cross slope and the running slope of a trail. This provision was the result of significant compromise among committee members. Exception 1 addresses open drainage structures. For open drainage structures, a running slope of 14 percent is permitted for 5 feet maximum with a cross slope of 1:20 maximum. Cross slope is permitted to be 1:10 at the bottom of the open drain, where the clear tread width is 42 inches minimum. Exception 2 exempts trails from T303.8 where one or more of the conditions of T302 exist.

Section T303.8.1 requires that the maximum cross slope of trail segments not exceed 1:20. Committee members recognized that cross slopes, or the side-to-side slope of a trail, can be difficult to traverse. At the same time, trails need to be designed to provide sufficient drainage to prevent ponding and water damage to the trail. Non-paved surfaces generally require more than a minimum of 1:50 cross slope.

Section T303.8.2 addresses the maximum running slope of trail segments. Section T303.8.2 permits no more than 30 percent of the total trail length to exceed a 1:12 slope. The committee debated various slope ratios for this provision. Committee members advocating steeper slopes were concerned that requiring unrealistic slopes in natural areas could significantly alter the natural terrain. Members advocating less slopes were concerned that steeper slopes would not be accessible, and could be a potential safety hazard.

This section requires that trails comply with one or more of four separate provisions. Designers may choose which provision to apply. Section T303.8.2.1 permits a running slope at 1:20 or less for any distance. Section T303.8.2.2 permits a running slope of 1:12 maximum for 200 feet maximum. Resting intervals must be provided at distances no greater than 200 feet apart. Section T303.8.2.3 permits the running slope to be 1:10 maximum for 30 feet maximum. Resting intervals must be provided at distances no greater than 30 feet apart. Section T303.8.2.4 permits the running slope to be 1:8 maximum for 10 feet maximum. Resting intervals must be provided at distances no greater than 10 feet apart.

Because the terrain in outdoor environments is often steep, the committee realized that applying slope and ramp requirements was not feasible. The proposed running slopes and maximum distances represent a compromise and balances accessibility with the constraints imposed by natural topography.

Question 19: Section T303.8 permits departure from the technical provisions for cross slope with open drainage structures. A cross slope up to 10 percent is permitted at the bottom of the open drain where the clear tread width is 42 inches minimum. Are open drainage structures the only drainage structures where cross slopes up to 10 percent should be permitted? If not, what other areas should be identified?

The committee believed that handrails should not be required on trails, since handrails are impractical in this environment. In addition, steeper grades on trails are usually contiguous with the surrounding terrain rather than elevated above it as with a ramp to a building. Instead, the committee limited the length of steep portions of trail segments and required resting intervals.

Section T303.9 requires resting intervals to be 60 inches in length to accommodate wheelchair users and at least as wide as the widest portion of the trail segment leading to the resting interval. The slope of the resting interval must not exceed 1:20 in any direction. An advisory recommends that the resting interval may be located to one side of the trail to allow other users to pass. An exception exempts trails from this technical provision where one of the conditions in T302 exists.

Section T303.10 does not require edge protection on accessible trails. However, where edge protection is provided, the height must be a minimum of 3 inches. Natural trail surfaces are likely to have variations in the trail surface, and a 2 inch edge protection may not be obvious or detectable in the outdoor environment. In the outdoor environment, many people with limited vision who use canes will search higher than in an indoor environment to distinguish between the edge and variations within the trail.

T304 Outdoor Recreation Access Routes

Section T304.2 requires the surface of an outdoor recreation access route to be firm and stable. This is consistent with the surface provision proposed for trails and other outdoor elements.

Section T304.3 requires the clear tread width of the outdoor recreation access route to be 36 inches minimum. An exception permits the width to be the minimum necessary or 32 inches for a distance of 24 inches where one or more of the conditions in T302 exist.

Section T304.4 addresses openings and does not permit passage of a ½ inch diameter sphere. Elongated openings must be placed so that the long dimension is perpendicular or diagonal to the dominant direction of travel. An exception permits the openings to run parallel so long as the opening does not permit passage of ¼ inch diameter sphere.

Section T304.5 requires that tread obstacles not exceed 1 inch high maximum. An exception permits a 2 inch high obstacle where it is beveled and where at least one of the conditions in T302 applies. Tread obstacles may occur where surface materials changes such as asphalt surfaces leading up to a concrete slab.

Section T304.6 requires passing space where the clear width of the outdoor recreation access route is less than 60 inches. Passing space is required at intervals of 200 feet maximum. Committee members determined that outdoor recreation access routes were more like an indoor accessible route than a trail. The passing space must be either a 60 inch by 60 inch space or an intersection of two walking surfaces which provide a T-shaped space complying with T402.1.2, provided that the arms and stem of the T-shaped space extend at least 48 inches beyond the intersection. An exception permits the passing spaces to be at intervals not to exceed 300 feet. This was added to address settings where it may not be possible to provide passing space within a 200 foot minimum interval, such as environmentally sensitive areas.

Section T304.7.1 addresses the cross slope of an outdoor recreation access route and permits a 1:33 maximum cross slope. An exception permits a 1:20 cross slope where necessary to ensure proper drainage. Natural or naturally appearing surfaces often require greater than 1:50 cross slopes to ensure proper drainage. Committee members agreed that water ponding on an outdoor recreation access route may make the route inaccessible; therefore, a greater cross slope is proposed.

Section T304.7.2 addresses running slope. Designers have a choice of applying one or more of the technical provisions in this section. Section T304.7.2.1 permits the running slope to be 1:20 or less for any distance. Section T304.7.2.2 permits the running slope to be 1:12 maximum for 50 feet maximum. Resting intervals must be provided at distances no greater than 50 feet apart. Section T304.7.2.3 permits the running slope to be 1:10 maximum for 30 feet maximum. Resting intervals must be provided at distances no greater than 30 feet apart.

Question 20: The committee was unable to decide whether there should be exceptions from the technical provisions for outdoor recreation access routes based on the conditions in T302. Currently, departures from the technical provisions are permitted for specific elements, (*e.g.*, picnic tables, camp sites) but not for the outdoor recreation access routes that connect those elements. Should exceptions be permitted for specific elements on the outdoor recreation access routes leading to those elements?

Question 21: The committee also discussed potential exceptions from the provisions for slope on an outdoor recreation access route, unrelated to whether the elements themselves complied with the technical provisions. The committee considered two options. One option provided a maximum for the total length of the outdoor recreation access route that could exceed a 1:12 slope. The committee considered that either 10 percent or 15 percent of the total length of the outdoor recreation access route could exceed a 1:12 slope. The second option was to apply the conditions in T302 to the technical provisions for the slope of an outdoor recreation access route. Comment is requested on this issue.

Section T304.8 requires resting intervals to be 60 inches minimum in length and have a width at least as wide as the route connecting it. The slope must not exceed 1:33 in any direction. Where the surface conditions require slopes greater than 1:33 for proper drainage, a 1:20 slope is permitted.

Section T304.9 requires edge protection, where provided, to be 3 inches minimum in height. This is consistent with the proposed provision for trails.

T305 Beach Access Routes

Section T305.2 requires the surface of the required beach access route to be firm and stable. Given the existence of loose material natural to a beach environment such as sand, algae, and barnacles, the committee decided that slip resistance is not an appropriate requirement for a beach access route. This is consistent with the provisions for other outdoor routes. Where a temporary route is provided, it must also be firm and stable.

Section T305.3 requires that a beach access route extend to the high tide level, mean river bed level, or the normal recreation water level. The committee believed that different lines of demarcation would vary depending upon the location of the beach. The committee selected the high tide level for coastal beach, the mean river bed level for river beaches, and the normal recreation water level for lakes and reservoirs. Beach access to the water will vary considerably between geographic locations because the tidal difference between high and low tides varies from place to place. For example, a beach in Alaska may experience tidal differences of tens or even hundreds of feet; beaches in Florida will have much smaller differences between low and high tides. The high tide mark is a reasonable location to terminate permanent structures as built facilities; below this point it is much more likely to wash out. The mean river bed level and the normal recreation water level are comparable for rivers and lakes, respectively.

Question 22: Comment is sought on the appropriateness of these markers and the ability to determine those levels at most beaches.

Question 23: The committee did not require a beach access route to extend beyond the high tide level, mean river bed level, or normal recreation water level. Comment is sought on what technical specifications should be required, if any, if an entity decides to provide the route into the water? Should the technical provisions for sloped entry into pools be applied in these cases?

Section T305.4 requires the clear tread width of the beach access route to be 36 inches minimum. This requirement is consistent with the proposed technical requirement for the clear tread width of trails and outdoor recreation access routes. Unlike other requirements for the clear width of trails and outdoor recreation access routes, no reduction in width is permitted. Since the beach access route will most likely be adjacent to sand, maintaining the 36 inch width is critical to avoid being caught off the path on a nontraversable sandy surface. The need for additional space for passing and resting has been included in other provisions.

Section T305.5 requires openings in the surfaces of the beach access route to be of a size that does not permit passage of a ½ inch diameter sphere. Elongated openings must be placed so that the long dimension is perpendicular or diagonal to the dominant direction of travel. This is consistent with the Architectural Barriers Act Accessibility Guidelines and the proposed technical provisions for outdoor recreation access routes. An exception permits the elongated openings to run parallel to the dominant direction of travel where the opening does not permit passage of a ¼ inch sphere.

Section T305.6 limits the obstacles in the beach access route to be 1 inch high maximum. This departs from the Architectural Barriers Act Accessibility Guidelines but is consistent with the proposed technical requirements for tread obstacles for an outdoor recreation access route and is necessary due to the uniqueness of the outdoor environment.

Section T305.7 requires passing space. Where the clear width of the beach access route is less than 60 inches, passing space must be provided at intervals of 200 feet. Passing space shall be either a 60 inch by 60 inch minimum space or an intersection of two walking surfaces which provides a T-shaped space complying with T402.1.2, provided that the arms and stem of the T-shaped space extend at least 48 inches beyond the intersection. This is consistent with the technical provisions for passing spaces on an outdoor recreation access route.

Section T305.8 requires a turning space or resting space at the end of the beach access route or at the high tide level, mean river bed level, or normal recreation water level. Turning space must not overlap the beach access route and must be either a 60 inch minimum by 60 inch minimum space, or an intersection of two walking surfaces which provide a T-shaped space complying with T402.1.2 provided that the arms and stem of the T-shaped space extend at least 48 inches beyond the intersection.

A resting or turning space allows a person with a disability to be out of the route of travel, to leave their wheelchair while transferring into a beach terrain vehicle, or simply to wait in a place outside the flow of traffic. The location of this resting or turning space should be in an area which is dry. If the route extends further than the minimum distance required, the resting or turning space may be placed at the end of the beach access route, although the location may not always remain dry.

Section T305.9 addresses the cross slope and running slope of beach access routes. Section T305.9.1 requires the maximum cross slope of a beach access route to not exceed 1:33. An exception permits cross slopes of 1:20 maximum

for drainage. This is consistent with the proposed technical requirements for cross slope of an outdoor recreation access route and is necessary for drainage in the outdoor environment.

Section T305.9.2 addresses running slope. Designers have a choice of applying one or more of the technical provisions in this section. Section T305.9.2.1 permits running slope to be 1:20 or less for any distance. Section T305.9.2.2 permits the running slope to be 1:12 maximum for 50 feet maximum. Resting intervals must be provided at distances no greater than 50 feet apart. Section T305.9.2.3 permits the running slope to be 1:10 maximum for 30 feet maximum. Resting intervals must be provided at distances no greater than 30 feet apart. The rationale for requiring a resting interval is the same as for trails or outdoor recreation access routes. The running slope provisions are the same as those for an outdoor recreation access route.

Section T305.10 requires edge protection where drop-offs from the beach access route to the beach are 6 inches or higher. The edge protection includes curbs, walls, or projecting surfaces that prevent people from falling off the route. Edge protection must be a minimum of 2 inches high. If the drop-off is greater than 1 inch, but less than 6 inches, then the edge must be beveled. While a raised edge may be considered a tripping hazard in some instances, the committee recognized that in some locations, an elevated route such as that created by a boardwalk might necessitate a raised edge for safety. Where these locations occur, the elevation of the route is already an impediment to the perpendicular traffic and the addition of edge protection would not create any more of a tripping hazard than that already created by the elevated route itself. Therefore, the committee recommended that those elevated routes, defined as 6 inches or more above the beach surface, have a requirement for edge protection equivalent to the edge protection requirement in the Architectural Barriers Act Accessibility Guidelines for ramps. If the height of the route is greater than 1 inch but less than 6 inches, the committee felt that edge protection was not required, although the edge should be beveled. If the height of the route is 1 inch or less, then there is no requirement for beveling, as an inch or less elevation is virtually a flat route and is reasonable to expect in a beach environment given the shifting of sand.

T306 Picnic Tables

Section T306.2 addresses the technical provisions for wheelchair spaces. Each wheelchair space must provide knee space of at least 30 inches wide, 19 inches deep, and 27 inches from the ground or floor to the bottom of the table top. This provision is different from the Architectural Barriers Act Accessibility Guidelines in that it also requires a toe clearance of 9 inches above the ground or floor extending for a total depth of 24 inches. This is an additional 5 inches minimum beyond the 19-inch knee space depth. This ensures that adequate toe clearance is provided at tables that have a solid leg at each end (rather than an A-shape frame or individual legs). A 19-inch deep space at the end of a solid leg table would not allow a person using a wheelchair to be sufficiently close to the table.

Section T306.3 addresses table clearance. This provision requires a 36-inch wide minimum clear floor or ground space surrounding the usable portions of a table, measured from the back edge of the seat, or the back edge of the table if no seat is provided.

Tables placed in buildings are generally expected to have ample space for moving around. This is not always the case where picnic tables are located in an outdoor environment. For that reason, the committee recommended a minimum clear floor or ground space that would provide maneuvering room beyond the accessible seating space to all usable portions of a table to allow for movement around the table.

Section T306.4 addresses clear spaces. Section T306.4.1 requires the surface of the clear floor or ground space and the wheelchair space to be firm and stable. Slip resistance is not required because of the tree leaves and needles, duff (partly decayed organic material on the forest floor), mud, snow, and ice that often cover outdoor areas. Exception 1 permits an exception from this requirement where at least one of the conditions of T302 applies.

Section T306.4.2 requires slopes of the required clear floor or ground spaces not to exceed 1:50 in any direction. Exceptions are provided to address the unique aspects of the outdoor environment. Natural and natural-appearing surfaces are often used in picnic areas. A 1:50 slope on these surfaces may not be adequate to ensure proper drainage. In these cases, exception 1 allows the slope in any direction to be 1:33 maximum. Exception 2 states that this provision does not have to be met where at least one of the conditions in section T302 applies.

T307 Fire Rings

Section T307.2 requires that a clear floor or ground space extending a minimum of 48 inches deep by 48 inches wide be provided at all usable portions of a fire ring. This clear floor or ground space exceeds what is generally required in the Architectural Barriers Act Accessibility Guidelines to allow both a forward and parallel approach and to provide more space to move away from the heat. Exception 1 permits the clear floor or ground space to be reduced to no less than 36 inches deep by 36 inches wide when one of the conditions in T302 exists. A clear floor or ground space of less than 36 inches by 36 inches at accessible fire rings could pose a safety hazard to users. As a result, no exception is provided to further reduce the clear floor or ground space to less than 36 inches by 36 inches.

The surface and slope requirements of the clear spaces required by T307.2 must comply with T306.4. Many of the elements included in this rule share the same requirements for the surface and slope of clear spaces. A discussion regarding this requirement is included in the preamble discussion for T306.4.

Section T307.3 requires the fire surface height to be 9 inches minimum above the ground or floor and is inconsistent with the Architectural Barriers Act Accessibility Guidelines specifications for a low side reach which is 15 inches.

Section T307.4 addresses raised edges around fire rings. Where a raised edge or curb is provided around a fire ring, this provision would require that the combined reach over the edge or curb and down to the fire building surface must be 24 inches maximum.

T308 Cooking Surfaces, Grills, and Pedestal Grills

The surface and slope requirements of the clear spaces required by T308.2 must comply with T306.4. Many of the elements included in this rule share the same requirements for the surface and slope of clear spaces. A discussion regarding this requirement is included in the preamble discussion for T306.4.

Section T308.3 requires accessible cooking surfaces to be installed between 15 inches and 34 inches above the ground or floor. This provides a comfortable reach range for cooking.

Section T308.4 requires operating controls and mechanisms to comply with T407.

T309 Fixed Trash and Recycling Containers

The surface and slope requirements of the clear spaces required by T309.2 must comply with T306.4. Many of the elements included in this rule share the same requirements for the surface and slope of clear spaces. A discussion regarding this requirement is included in the preamble discussion for T306.4. Section T309.3 requires operating controls for the containers to comply with T407.2 and T407.3. However, an exemption from this requirement is provided where the container has a hinged, sliding, or other cover and is situated where it is subject to large animal intrusion, thus dictating animal-resistant controls. Current designs for controls and operating mechanisms preclude providing secure storage of trash or recycled material from large animals, and still meet the reach and operating force requirements of T407.3.

T310 Wood Stoves and Fireplaces

The surface and slope requirements of the clear spaces required by T310.2 must comply with T306.4. Many of the elements included in this rule share the same requirements for the surface and slope of clear spaces. A discussion regarding this requirement is included in the preamble discussion for T306.4.

Section T310.2 requires that a clear floor or ground space 48 inches deep minimum and 48 inches wide minimum be provided from all usable portions of the wood stove or fireplace. This is consistent with space requirements for other elements in outdoor developed facilities, such as fire rings and grills. The 48 inch requirement allows for a front and side approach. The committee agreed that the extra space required beyond 30 inches by 48 inches is warranted in this case where safety is paramount. An exception is provided to reduce this requirement to 36 inches minimum depth where one or more of the conditions in section T302 exist.

Section T310.3 requires the controls for operation of wood stoves and fireplaces to comply with T407.

Question 24: Are there controls and operating mechanisms available for fireplaces that will meet the requirements of T407? If not, what modifications will allow for most operating mechanisms of woodstoves and fireplaces to meet this provision?

T311 Overlooks and Viewing Areas

Section T311.2 requires at least one turning space with a circular or T-shaped space complying T402. The surface and slope requirements of the turning spaces required by T311.2 must comply with T306.4. Many of the elements included in this rule share the same requirements for the surface and slope of clear spaces. A discussion regarding this requirement is included in the preamble discussion for T306.4.

Section T311.3 requires that each location providing a viewing opportunity to one or more distinct points of interest must have at least one unrestricted viewing area for each viewing opportunity. The committee felt that the attraction of a viewing area is to bring persons to a place where they can enjoy all the aspects of the site and persons with disabilities should have the opportunity to experience the attraction. The committee determined that an arc extending from 32 inches minimum above the level surface of the viewing area to 51 inches maximum above the surface would be sufficient to allow an unobstructed view. Often the overlook or the viewing area has an adjacent drop-off that would present a hazard to the user of the area. Safety barriers are often installed (such as a guardrail, railing, or wall) to protect the visitor from the edge and may block the view. This provision requires an unobstructed view to the distinct point of interest. There must be a means by which a field of view in the described arc is obtained. Various designs or recommendations to manage this are provided in the advisory, and include see-through panels in walls or elevated platforms away from the guarded edge. A periscope complying with T212.1 is also an option for a view over a barrier. This provision does not apply where one of the conditions in T302 exists.

T312 Telescopes and Periscopes

Section T312.2 requires the surface conditions of the clear floor or ground space adjacent to the telescope or periscope to be firm and stable, and comply with the clear space requirement of T403. In the interest of safety and the ability to use the elements in an unchanging and balanced condition, a dependable surface condition is a necessity.

Section T312.2 also requires the slope of the required clear floor or ground space to not exceed 1:50 in any direction, unless the surface condition is such that drainage is a problem. Where drainage is of concern, a 1:33 maximum slope is permitted. Drainage from the area adjacent to the elements is essential to preserve the integrity of the surface condition and to provide a comfortable location to use the elements.

Section T312.3 requires the controls and operating mechanisms of telescopes and periscopes to comply with T407.

Section T312.4 requires the eye piece to be usable from a seated position so that each distinct point of interest is viewable. This will provide the widest range of viewing opportunities, not only for seated individuals but also for children. An advisory provides suggestions on how to accomplish this. Options include an adjustable scope mount, a swivel seat or installing an element that would allow for a high/low option similar to what is offered for water fountains. The requirement for use from the seated position is necessary for people using wheelchairs and other mobility devices. The committee recognized that this may also benefit children or individuals of short stature.

T313 Fixed Benches

Section T313.2 requires the surface and slope requirements of the clear spaces to comply with T306.4. Many of the elements included in this rule share the same requirements for the surface and slope of clear spaces. A discussion regarding this requirement is included in the preamble discussion for T306.4.

Section T313.2 also requires that clear spaces be located at one end of the accessible bench, and not overlap other clear floor or ground space requirements. The committee debated the location of the clear floor or ground space, recognizing that many different configurations could exist. The requirement of a clear floor or ground space at one end without intruding into other clear floor or ground spaces provides users with the same perspective as the occupant of the bench, no matter which direction the bench is facing and avoids obstructing the outdoor recreation access route. Shoulder-to-shoulder alignment of the clear floor or ground space enhances the opportunity for and ease of interaction or conversation with someone seated on the bench.

Section T313.3 requires that the top of the seat surface be between 17 inches and 19 inches above the ground or floor space to facilitate transfer. This provision is consistent with the Architectural Barriers Act Accessibility Guidelines.

Section T313.4 addresses back support. Back support is required on accessible benches and must extend the full length of the bench.

Section T313.5 addresses armrests. Where required by T213.2, at least one armrest is required on a single bench. Section T213.2.2 requires armrests where multiple benches are provided. All armrests must comply with T411.8. This will facilitate transfer to the bench

and provide support to maneuver to or from the bench seat.

T314 Utility Sinks

Section T314.2 requires a clear floor or ground space complying with T403.1 to be provided at the sink for adequate reach and turning space. Section T314.2 requires that the clear floor or ground space not have a slope greater than 1:50. An exception permits the slope of the clear floor or ground space to be 1:33 maximum to provide proper drainage. Section T314.2 also requires that the surface of the clear floor space be firm and stable.

Section T314.3 requires the height of the counter or rim to be 34 inches maximum above the floor or ground surface.

Section T314.4 requires the depth of the bowl to be 15 inches minimum above the floor or ground surface. The committee recognized that there may be some difficulty in providing a deep enough sink to accomplish the purposes of cleaning larger pots or pans given current reach range requirements. However, the committee believed that adhering to the established reach ranges was important.

Section T314.5 requires operable parts of the sink to comply with T407.

T315 Mobility Device Storage Facilities

Section T315.2 requires the surface and slope requirements of the clear spaces to comply with T306.4. Many of the elements included in this rule share the same requirements for the surface and slope of clear spaces. A discussion regarding this requirement is included in the preamble discussion for T306.4.

Section T315.3 requires that the size of the storage space be 38 inches minimum in height, 28 inches minimum in width and 40 inches minimum in length. These dimensions are based on the space needed for a collapsed standard adult wheelchair. The committee agreed that a wheelchair would be the most commonly occurring device which would require storage and based the requirements accordingly.

Section T315.4 requires controls and operating mechanisms for accessible mobility storage facilities to comply with T407.

T316 Pit Toilets

Section T316.2 requires the surface and slope requirements of the clear spaces to comply with T306.4. Many of the elements included in this rule share the same requirements for the surface and slope of clear spaces. A discussion regarding this requirement is included in the preamble discussion for T306.4.

Section T316.2 also requires compliance T409. Where one of the conditions in T302 applies, exception 1 permits the size of the clear floor or ground space to be reduced to 48 inches by 48 inches. Where a 48 inch by 48 inch clear floor or ground space cannot be provided because at least one of the conditions of T302 applies, exception 2 does not require compliance with T316.2.

Section T316.3 requires the height of the pit toilet seat to comply with T409.4. No exceptions for the outdoor environment were necessary.

Section T316.4 requires grab bars complying with T411 only where the pit toilets are provided with walls. Since many pit toilets consist of a riser placed on the ground, the committee agreed that the requirement for grab bars should only be triggered if a structure surrounds the riser.

T317 Utilities

Section T317.2 requires the slopes of clear floor or ground spaces at utilities to have a 1:50 maximum slope in any direction. Where surface conditions require a slope greater than 1:50 for proper drainage, an exception permits a 1:33 maximum slope. Section T317.2 also requires the surface of the clear floor or ground space to be firm and stable.

Section T317.3 requires fixed water spouts to be located 28 inches minimum to 36 inches maximum above the ground or floor surface and to be centered at the edge of a 60 inch minimum by 60 inch minimum clear floor or ground space.

Section 317.4 requires controls and operating mechanisms associated with utilities to comply with T407. Exception 1 does not apply T407 to sewage hookups. Exception 2 exempts hand pumps from T407.3. The rationale for not requiring sewer hookups to meet height and reach range provisions is based on their ground level location necessary for gravity drainage. Most are foot drains or have a small handle at the ground level to open the connection to the system.

T318 Camping Facilities

Section T318.2 addresses accessible camping space parking. Section T318.2.1 requires accessible recreational camping vehicle or trailer camping spaces to be 20 feet minimum in width. This was determined to be necessary to accommodate existing equipment manufactured by the recreational camping vehicle industry and lifts required to gain access out of and into this equipment. The extra width associated with this parking space is necessary to provide 3 feet of space on the driver's side for access to utilities. The parking space is 9 feet to allow for vehicle width and an 8 foot space on the passenger side for deployment of a lift with room to exit conveniently. An exception permits one space to be 16 feet minimum in width, where only two accessible parking spaces are required. The exception allows a smaller parking pad (van size) for the second accessible campsite. This deviation will limit the impact on the environment and the user's experience.

Section T318.2.2 addresses tent camping spaces and camp shelter spaces. Where parking is provided, a tent camping and camp shelter parking space 16 feet wide is required and follows the Architectural Barriers Act Accessibility Guidelines for van accessible parking spaces which would accommodate the maximum size vehicle used for this type of campsite. A ''camp shelter'' also includes cabin accommodations.

Section T318.2.3 requires recreation camping vehicle and trailer parking spaces located in general use parking areas to be 12 feet minimum wide and to have an adjacent access aisle of 8 feet extending the full length of the parking space. The surface of the parking space and access aisle must be firm and stable.

Section T318.2.4 requires that the slope of an accessible parking space not exceed 1:50 in any direction. Where surface conditions require a greater slope for proper drainage, an exception permits a 1:33 maximum slope.

Section T318.3 addresses tent pads and tent platforms. Section T318.3.1 addresses clear space. A 48 inch clear space around the tent pad is required to allow both side and front approach access to assembling equipment. An exception allows the clear space to be reduced to 36 inches where at least one of the conditions in T302 applies.

Section T318.3.2 requires the tent pad surface to be firm and stable, consistent with other provisions in Chapters T2 and T3. An exception is permitted where at least one of the four conditions specified in T302 exist.

Section T318.3.3 requires that the slope of the tent pad or platform not exceed 1:50 in any direction. An exception permits a 1:33 maximum slope where necessary for proper drainage.

Section T318.3.4 requires edge protection to be 3 inches minimum where a raised tent platform is provided. The 3 inch minimum is necessary to ensure visibility and to prevent wheelchairs and other mobility devices from rolling off the raised platform.

Section T318.3.5 addresses the connection where a tent platform is raised above grade to provide a level surface to pitch a tent. Access is provided in a similar fashion to playground equipment by a transfer system including a platform and transfer steps. The need for mobility equipment on the platform surface was not deemed to be necessary for use, as the surface area is the same size as the tent.

T319 Warming Huts

Section T319.1 requires warming huts to provide a turning space that complies with T402 and if a door is provided that it comply with T408.

T320 Outdoor Rinsing Showers

Section T320.2 addresses the requirement for clear space. A clear space which would permit a front or parallel approach is necessary in order to make the shower usable. For most elements, such as a telephone or drinking fountain, a 30 inch by 48 inch clear floor space would suffice. Committee members agreed that only providing a front approach without a 5 foot turnaround space would not allow someone in a wheelchair to turn 360 degrees to rinse off under all angles of the water. For ease and convenience of use for people using wheelchairs, the full turnaround space must be provided.

Section T320.2 also addresses the requirement for slope. The committee recommended that the slope of the clear space not exceed 1:33 in all directions. This is consistent with recommendations by the committee for other outdoor elements where drainage is a concern. Many park maintenance managers indicated that a 1:20 slope is required for the floors of outdoor showers to ensure proper drainage. The committee believed that the increase to 1:33 would suffice and allow for a reasonable tolerance.

Section T320.3 addresses the requirements for grab bars. Grab bars are typically not found in outdoor showers, primarily because the majority of the showers are free-standing poles and there is no place to mount a grab bar which conforms to the Architectural Barriers Act Accessibility Guidelines. Nonetheless, the committee believed that a grab bar was essential for stability in a wet environment, but not for transfer. The committee also recommended providing three options for the grab bar: vertical, circular (if the shower is on a pole), and horizontal (if the shower is on a wall). If a vertical grab bar is chosen it would be permitted only on a post. The committee recommended that it be provided 33 inches above the floor, the lowest height currently for a grab bar, and extend the length of the pole within 3 inches below the shower head. If a circular grab bar is chosen it would also be permitted only on a post. This type of grab bar would resemble a spoked wheel mounted perpendicular to the post. The committee recommended that the grab bar be provided 33 to 36 inches above the floor, consistent with a horizontal grab bar in an indoor shower. If a horizontal grab bar is chosen, the committee recommended a 33 to 36 inch mounting height, consistent with the mounting height for horizontal grab bars in indoor showers.

Section T320.4 addresses the requirements for controls. In order for controls to be usable, they must be within reach ranges and be operable. The committee recommended that controls comply with T407. Many outdoor showers have a twist-type knob because those controls are less subject to vandalism. Although vandalism is a legitimate concern in outdoor settings, the committee agreed that accessible controls could be vandal-proofed, particularly if push controls are used. Therefore, the committee recommended that controls and operating mechanism comply with T407. If self-closing controls are used, the controls shall remain open for at least 10 seconds, the minimum time needed for rinsing.

Section T320.5 addresses the requirements for a low outdoor rinsing shower spray head. The appropriate height for a low rinsing shower is taken from the current requirements for indoor showers. In order to provide flexibility, rather than an absolute mounting height, the committee recommended a range of 48 to 54 inches. A hand-held shower spray unit is permitted, although the committee realized that this would be an infrequent choice in an outdoor environment due to vandalism concerns.

Section T320.6 addresses the requirement for the height of a high outdoor rinsing shower spray head. The height of the shower head must be a minimum of 72 inches above the floor or ground. A hand-held shower spray is permitted.

The committee also discussed shower seats. Indoor showers which are designated as accessible require a seat. This requirement may not be reasonable for all outdoor showers. An adjacent bench might be conveniently located for the placement of items, but not in conjunction with showering itself. With an outdoor pole shower, there is no adjacent wall on which to mount a fold-down seat. In an outdoor shower mounted to a wall, a fold-down bench would likely be vandalized. Therefore, the committee recommended that there be no requirement for a shower seat in an outdoor rinsing shower.

T321 Signs

Section T321.2 requires trails or trail segments that comply with T303 to provide a sign at the trail head and all designated access points. The sign must display a symbol designating that the trail or trail segment is accessible and shall include the total distance of the accessible trail or segment and the location of the first point where exceptions from the technical provision in T303 apply.

An example of a sign to be used at accessible trails is included in an advisory note. Signs identifying accessible trail segments must include the total distance of the accessible segment and the location of the first point of departure from the technical provisions.

Signs for trails were extensively debated by the committee. While certain trail information is critical for users, there was concern about requiring too many signs with too much information. There were also concerns that the requirement may be too onerous in terms of providing detailed information about trail characteristics. As a compromise, the committee agreed to include a requirement for a symbol to identify those trails that are accessible. Additionally, where the symbol is used to identify accessible trail segments, the total distance of the accessible trail segment to the location of the first point of departure from the technical provision must be provided.

An extensive advisory note has been provided on the issue of trail information. The advisory note includes recommendations for the types of information which should be provided and examples of different formats for providing the information. Where trails are provided and conditions have required departure from some of the technical provisions, it is recommended that more detailed signs be provided to help users make informed decisions about trail use.

Question 25: Some examples of proposed signs designating accessible trails are included in an advisory note. The committee did not reach a consensus on a particular sign. Comment is sought on these signs and other options. The proposed guidelines for trails require a sign on trails that meet the provisions and exceptions of T303.

Section T321.3 requires camping spaces that comply with T318 to be

identified by the International Symbol of Accessibility complying with T412.2.

T322 Protruding Objects

Section T322.1 requires protruding objects on trails, outdoor recreation access routes, and beach access routes to comply with T405. Protruding objects on trails must have 80 inches of vertical clearance. An exception permits a reduction in the 80 inch vertical clearance provided that a barrier is provided to warn persons with visual impairments. This allows a trail to pass through narrow, winding corridors, under ledges or through caves. This provision represents a compromise reached by committee members. Some committee members saw the need for a departure from the minimum 80 inches overhead clearance, while others felt that permitting this could present barriers to people with visual impairments.

Question 26: The committee could not reach consensus on allowing a complete departure from this provision if the minimum overhead clearance could not be provided along a trail. After some debate, the committee agreed to propose the technical requirements for headroom clearance. Providing such a warning along a trail in the outdoor environment may have the effect of creating a barrier for all trail users. What other options are available on trails, specifically where there is a lack of sufficient space to move around an obstruction without significantly impacting the natural environment or setting?

Chapter T4

Chapter T4 provides supplementary technical provisions that apply where required by Chapter T3 or where referenced by a requirement in this document.

Regulatory Process Matters

These guidelines have been reviewed by the Office of Management and Budget pursuant to Executive Order 12866. The Access Board prepared a regulatory assessment for the guidelines. The regulatory assessment is available on the Access Board's Web site at *http://www.access-board.gov/outdoor/assessment.htm.* The guidelines apply to the new construction and alteration of outdoor developed areas by Federal agencies subject to the Architectural Barriers Act. The guidelines will primarily affect the following Federal land management agencies in the Department of Agriculture: Forest Service; in the Department of the Interior: National Park Service, Fish and Wildlife Service, Bureau of Land Management, and Bureau of Reclamation; and in the Department of Defense: Army Corps of Engineers.

Establishing the Federal land management agencies annual expenditures on the construction and alterations of the elements and spaces covered by the proposed guidelines required a project-by-project review. The Access Board requested data from the Federal land management agencies on camping and picnic projects and trails projects funded in FY 2004 that included elements and spaces covered by the proposed guidelines. The data is summarized in Table 1. Some of the projects included the construction and alterations of general parking areas, restrooms, and other facilities covered by existing accessibility standards, or the construction and alterations of roads and other infrastructure that are not subject to accessibility standards. Thus, the total project costs overstate the expenditures on elements and spaces covered by the proposed guidelines.

TABLE 1.—FY 2004 PROJECTS THAT INCLUDED CONSTRUCTION AND ALTERATIONS OF ELEMENTS AND SPACES COVERED BY PROPOSED GUIDELINES

Agency	Camping & picnic areas		Trails	
	Number of projects	Total project costs	Number of projects	Total project costs
Department of Agriculture				
Forest Service	Not available	$6.9 million (FY 2003)	Not available.	Not available.
Department of the Interior:				
National Park Service	46	$14.0 million	33	$2.7 million.
Fish and Wildlife Service	2	$0.2 million	3	$0.3 million.
Bureau of Land Management	6	$1.8 million	1	$25,000.
Bureau of Reclamation	8	$1.1 million	3	$1.2 million.
Department of Defense:				
Army Corps of Engineers	25	Not available	4	$1 million.
Total	87	$24.0 million	44	$5.2 million.

The Access Board reviewed 43 camping and picnic area projects and 26 trail projects that included the construction or alteration of elements and spaces covered by the accessibility guidelines for outdoor developed areas for this regulatory assessment, as shown in Table 2. The purpose of the review was to assess the level of accessibility of the elements and spaces, and the additional costs associated with accessibility.

TABLE 2.—PROJECTS REVIEWED FOR REGULATORY ASSESSMENT

Agency	Camping & picnic area projects	Trail projects
Department of Agriculture:		
Forest Service	12	4
Department of the Interior:		
National Park Service	9	11
Fish and Wildlife Service	2	3
Bureau of Land Management	6	1
Bureau of Reclamation	8	3
Department of Defense:		

TABLE 2.—PROJECTS REVIEWED FOR REGULATORY ASSESSMENT—Continued

Agency	Camping & picnic area projects	Trail projects
Army Corps of Engineers ..	6	4
Total	43	26

The Access Board used two baselines for this regulatory assessment. The first baseline assesses the costs associated with the proposed guidelines compared to the Federal land management agencies current accessibility policies and practices as described below:

• *Forest Service—FSORAG and FSTAG.* The Forest Service currently requires all its construction and alteration projects to use Forest Service Outdoor Recreation Accessibility Guidelines (FSORAG) and Forest Service Trail Accessibility Guidelines (FSTAG). FSORAG and FSTAG generally meet or exceed the level of accessibility in the proposed guidelines. Thus, the Forest Service's projects will not incur any additional costs associated with the proposed guidelines compared to FSORAG and FSTAG.

• *Department of the Interior—Best Practices Bulletins.* The Federal land management agencies in the Department of the Interior currently use the National Center on Accessibility's best practices bulletins. However, the agencies have not formally required all their construction and alteration projects to use the technical bulletins. Therefore, the baseline assumes 50 percent to 75 percent of the agencies' projects use the best practices bulletins. The best practices bulletins generally meet the level of accessibility in the proposed guidelines. Thus, the percentage of the agencies' projects that will incur additional costs associated with the proposed guidelines range from a lower bound of 25 percent to an upper bound of 50 percent.

• *Army Corps of Engineers—Recreation Facility and Customer Service Standards and Best Practices.* The Army Corps of Engineers currently require all its construction and alteration projects to use its Recreation Facility and Customer Service Standards, and also currently recommends that the projects use best practices for accessible design. The Army Corps of Engineers' Recreation Facility and Customer Service Standards generally meet or exceed the level of accessibility in the proposed guidelines, except for recreational vehicle parking areas and trails. The baseline assumes 50 percent to 75 percent of the Army Corps of Engineers' projects use best practices for designing accessible recreational vehicle parking areas and trails that meet the level of accessibility in the proposed guidelines. Thus, the percentage of the Army Corps of Engineers' projects that will incur additional costs for recreational vehicle parking areas and trails associated with the proposed guidelines range from a lower bound of 25 percent to an upper bound of 50 percent.

The additional annual costs associated with the proposed guidelines compared to the Federal land management agencies current accessibility policies and practices range from $0.5 million to $1.1 million.

The second baseline assesses the costs associated with the proposed guidelines if accessibility were not required by the Access Board or otherwise. That is, the second baseline attempts to evaluate how the Federal land management's agencies would construct the elements and spaces covered by the proposed guidelines in the absence of any accessibility requirement. The additional annual costs associated with the proposed guidelines using the second baseline range from $2.0 million to $2.6 million.

Individuals with disabilities, and their families and friends, will benefit from visiting and using accessible facilities in outdoor developed areas. The U.S. Census Bureau reports that there are 51.2 million Americans with disabilities in the civilian non-institutionalized population in 2002. Among the population age 15 and older, 2.7 million individuals use a wheelchair, and another 9.1 million use a mobility aid such as a cane, crutches, or walker. The benefits to individuals with disabilities are not quantifiable. Many of the benefits to these individuals resulting from accessible facilities in outdoor developed areas are currently being realized under the Federal land management agencies' current accessibility policies and practices. The proposed guidelines will contribute to the benefits, and the benefits justify the regulatory action.

The proposed guidelines will not have a significant economic impact on a substantial number of small entities for purposes of the Regulatory Flexibility Act because the guidelines apply only to Federal agencies. The proposed guidelines do not have any Federalism implications because they do not apply to State, local, and tribal governments. The proposed guidelines do not establish any requirements subject to the Paperwork Reduction Act.

List of Subjects in 36 CFR Part 1195

Buildings and facilities, Individuals with disabilities.

Tricia Mason,

Chair, Architectural and Transportation Barriers Compliance Board.

For the reasons set forth in the preamble, the Access Board proposes to add part 1195 to Chapter XI of title 36 of the Code of Federal Regulations to read as follows:

PART 1195—ARCHITECTURAL BARRIERS ACT ACCESSIBILITY GUIDELINES FOR OUTDOOR DEVELOPED AREAS

Sec.
1195.1 Accessibility guidelines.
Appendix A to Part 1195—Architectural Barriers Act Accessibility Guidelines for Outdoor Developed Areas

Authority: 29 U.S.C. 792(b)(3).

§ 1195.1 Accessibility guidelines.

The accessibility guidelines for outdoor developed areas designed, constructed, or altered by or on behalf of Federal agencies subject to the Architectural Barriers Act are set forth in Appendix A to this part.

Appendix A to Part 1195—Architectural Barriers Act Accessibility Guidelines for Outdoor Developed Areas

BILLING CODE 8190–01–P

TABLE OF CONTENTS

CHAPTER T1: APPLICATION AND ADMINISTRATION 1

T101 Purpose 1
T102 Modifications and Waivers 1
T103 Conventions 1
T104 Definitions 3

CHAPTER T2: SCOPING REQUIREMENTS 4

T201 Application 4
T202 Additions and Alterations to Existing Facilities 4
T203 Trails 6
T204 Outdoor Recreation Access Routes 6
T205 Beach Access Routes 7
T206 Picnic Tables 7
T207 Fire Rings 8
T208 Cooking Surfaces, Grills, and Pedestal Grills 9
T209 Trash and Recycling Containers 9
T210 Wood Stoves and Fireplaces 9
T211 Overlooks and Viewing Areas 9
T212 Telescopes and Periscopes 9
T213 Benches 9
T214 Utility Sinks 10
T215 Mobility Device Storage Facilities 10
T216 Pit Toilets 10
T217 Utilities 10
T218 Camping Facilities 10
T219 Warming Huts 11
T220 Outdoor Rinsing Showers 11
T221 Signs 12
T222 Protruding Objects 12

CHAPTER T3: TECHNICAL PROVISIONS 13

T301 General 13
T302 Conditions for Exceptions 13
T303 Trails 16
T304 Outdoor Recreation Access Routes 22
T305 Beach Access Routes 25
T306 Picnic Tables 27
T307 Fire Rings 28
T308 Cooking Surfaces, Grills, and Pedestal Grills 28
T309 Trash and Recycling Containers 29
T310 Wood Stoves and Fireplaces 29
T311 Overlooks and Viewing Areas 29
T312 Telescopes and Periscopes 30
T313 Fixed Benches 30
T314 Utility Sinks 31
T315 Mobility Device Storage Facilities 31
T316 Pit Toilets 31
T317 Utilities 32

TABLE OF CONTENTS

T318 Camping Facilities 32
T319 Warming Huts 33
T320 Outdoor Rinsing Showers 33
T321 Signs 34
T322 Protruding Objects 39

CHAPTER T4: SUPPLEMENTARY TECHNICAL PROVISIONS 40

T401 General 40
T402 Turning Space 40
T403 Clear Floor or Ground Space 40
T404 Knee and Toe Clearance 41
T405 Protruding Objects 43
T406 Reach Ranges 44
T407 Operable Parts 47
T408 Doors, Doorways, and Gate 47
T409 Pit Toilets 54
T410 Shower Spray Unit 57
T411 Grab Bar 57
T412 Symbol of Accessibility 59

CHAPTER T1: APPLICATION AND ADMINISTRATION

T101 Purpose

This document contains scoping and technical requirements for accessibility to outdoor developed areas by individuals with disabilities. These requirements are to be applied during the design, construction, additions to, and alterations of outdoor developed areas by Federal agencies when adopted as standards pursuant to the Architectural Barriers Act.

> **Advisory T101 Purpose.** It is recognized that compliance with this document may not necessarily result in an accessible facility for all persons with disabilities. The intent is to ensure that accessibility is considered for all newly constructed and altered trails and other outdoor elements, recognizing that natural environments may not always be compatible with fully accessible facilities.

T102 Modifications and Waivers

The Architectural Barriers Act authorizes the Administrator of the General Services Administration, the Secretary of the Department of Housing and Urban Development, the Secretary of the Department of Defense, and the United States Postal Service to modify or waive the accessibility standards for facilities covered by the Architectural Barriers Act on a case-by-case basis, upon application made by the head of the department, agency, or instrumentality of the United States concerned. The General Services Administration, the Department of Housing and Urban Development, the Department of Defense, and the United States Postal Service may grant a modification or waiver only upon a determination that it is clearly necessary. Section 502(b)(1) of the Rehabilitation Act of 1973 authorizes the Access Board to ensure that modifications and waivers are based on findings of fact and are not inconsistent with the Architectural Barriers Act.

T103 Conventions

T103.1 Dimensions. Dimensions that are not stated as “maximum” or “minimum” are absolute.

T103.1.1 Construction and Manufacturing Tolerances. All dimensions are subject to conventional industry tolerances except where the requirement is stated as a range with specific minimum and maximum end points.

T103.2 Calculation of Percentages. Where the required number of elements or facilities to be provided is determined by calculations of ratios or percentages and remainders or fractions result, the next greater whole number of such elements or facilities shall be provided. Where the determination of the required size or dimension of an element or facility involves ratios or percentages, rounding down for values less than one half shall be permitted.

T103.3 Figures. Unless specifically stated otherwise, figures are provided for informational purposes only.

Convention	Description
36 / 915	dimension showing English units (in inches unless otherwise specified) above the line and SI units (in millimeters unless otherwise specified) below the line
6 / 150	dimension for small measurements
33-36 / 840-915	dimension showing a range with minimum - maximum
min	minimum
max	maximum
>	greater than
≥	greater than or equal to
<	less than
≤	less than or equal to
	boundary of clear floor space or maneuvering clearance
℄	centerline
	a permitted element or its extension
	direction of travel or approach
	a wall, floor, ceiling or other element cut in section or plan
	a highlighted element in elevation or plan
	location zone of element, control or feature

Figure T103
Graphic Convention for Figures

T104 Definitions

T104.1 General. For the purpose of this document, the terms defined in T104.4 have the indicated meaning.

T104.2 Undefined Terms. The meaning of terms not specifically defined in T104.4 or in regulations issued by Federal agencies shall be as defined by collegiate dictionaries in the sense that the context implies.

T104.3 Interchangeability. Words, terms and phrases used in the singular include the plural and those used in the plural include the singular.

T104.4 Defined Terms

Alteration. A change to a facility or site that affects or could affect the usability of the facility or site or portion thereof. Normal maintenance and repair, including but not limited to removal of debris and maintenance of a trail head structure are not alterations unless they affect the usability of the facility or site.

Beach Access Route. A continuous unobstructed path designated for pedestrian use that crosses the surface of the beach.

Designated Trailhead. A designated point of access that may contain a parking area, information kiosks, restrooms, water hydrants, and may be reached by vehicular or pedestrian access.

Facility. All or any portion of buildings, structures, site improvements, elements and pedestrian routes or vehicular ways located on a site.

Outdoor Recreation Access Route. A continuous unobstructed path designated for pedestrian use that connects accessible elements within a picnic area, camping area, or designated trailhead.

Trail. A route that is designed, constructed, or designated for recreational pedestrian use or provided as an pedestrian alternative to vehicular routes within a transportation system.

Tread Width. The path or visible trail surface perpendicular to the direction of travel. The clear tread width of the trail is the width of the usable trail tread, measured perpendicular to the direction of travel and on or parallel to the surface of the usable trail tread. The minimum clear tread width is the narrowest measurement on the usable trail tread.

CHAPTER T2: SCOPING REQUIREMENTS

T201 Application

T201.1 Scope. All newly designed and constructed trails, outdoor recreation access routes, beach access routes, and picnic and camping facilities and altered portions of existing trails, outdoor recreation access routes, beach access routes, and picnic and camping facilities shall comply with these requirements.

T201.2 Application Based on Building or Facility Use. Where a facility or site contains more than one use, each portion shall comply with the applicable requirements for that use.

T201.3 Temporary and Permanent Facilities. These requirements shall apply to temporary and permanent facilities.

T201.4 Requirements for Buildings and Facilities. All areas of newly designed and newly constructed buildings and facilities and altered portions of existing buildings and facilities subject to the Architectural Barriers Act Accessibility Guidelines in Appendices C and D to 36 CFR part 1191 shall comply with the applicable requirements in that document.

> **Advisory T201.4 Requirements for Buildings and Facilities.** Other constructed elements and spaces such as toilet and bathing facilities, vault toilets, parking facilities, and visitor centers are already addressed in the ABA Accessibility Guidelines. Additionally, recreation facilities such as fishing piers and platforms, recreation boating facilities, and swimming pools and spas, are also addressed.

T202 Additions and Alterations to Existing Facilities

T202.1 General. Additions and alterations to existing facilities shall comply with T202.

T202.2 Additions. Each addition to an existing facility shall comply with the requirements for new construction.

T202.3 Alterations. Where existing trails connecting to designated trailheads or accessible trails are altered, they shall comply with Chapter T2. Where existing picnic and camping elements or spaces, outdoor recreation access routes or beach access routes are altered, each altered element or space shall comply with the applicable requirements of Chapter T2.

EXCEPTIONS: 1. Where the circulation path to the altered element or space is not altered, an outdoor recreation access route shall not be required.

2. Where elements complying with T306 through T322 are altered and the ground surface is not altered, the ground surface shall not be required to comply with T306.4.

Advisory T202.3 Alterations. The following guidance is provided to assist designers and operators distinguish between actions considered "maintenance or repair" and those considered an "alteration." Where actions are considered an "alteration," certain technical provisions will apply. Routine or periodic maintenance activities do not trigger the technical and scoping provisions. For example, if an entirely new bridge were installed to replace a step stone crossing, the bridge would be required to comply with the relevant provisions. The trail on either side of the new bridge may not require modification.

As a general rule, alterations are performed to change the original purpose, intent, or design of a facility. Examples of actions that would be considered alterations include, but are not limited to:

- Installation of a new trail tread surface, bridge, boardwalk, railing, safety barrier, signage, and puncheon;
- Construction, reconstruction, or installation of a new trail segment, new built features such as restrooms or picnic areas, bridges, gates, benches, safety barriers, and steps;
- Removal of existing features;
- Hardening of trail surfaces; and
- Rerouting or widening a significant portion of an existing trail.

Maintenance and repair are performed to return a facility to the standards or conditions to which it was originally designed and built. This type of work is not an alteration because it does not change the original purpose, intent, or design of the facility. It is recognized that in outdoor environments, the ability to maintain a facility is usually much more limited than in the built environment. Except in highly developed areas, maintenance and repair occurs relatively infrequently. Examples of actions that would be considered maintenance and repair includes, but are not limited to:

- Removal of debris and vegetation such as downed trees or broken branches in the trailway, clearing the trail of encroaching brush or grasses, and removing rock slides;
- Maintenance of the trail tread such as filling ruts and entrenchments, reshaping the trail bed, repairing the trail surface and washouts, installing rip rap (rock placed to retain cut and fill slopes), and constructing retaining walls or cribbing to support the trail tread;
- Replacing or installing necessary drainage structures such as drainage dips, water bars, or culverts, and realigning sections of trail to deter erosion or avoid boggy or marshy areas; and
- Repair of trail and trailhead structures, including painting, removing graffiti, and replacement of deteriorated, damaged, or vandalized parts of structures such as sections of bridges, boardwalks, information kiosks, fencing, and railings.

Although not required, resource managers are encouraged to maximize the opportunity to improve the accessibility of outdoor facilities through maintenance and repair activities. Every time a facility is maintained, the opportunity to improve access is present.

T202.3.1 Prohibited Reduction in Access. An alteration that decreases or has the effect of decreasing the accessibility of a facility or site below the requirements for new construction in effect at the time of the alteration is prohibited.

T202.3.2 Extent of Application. An alteration of an existing facility or site shall not impose a requirement for accessibility greater than required for new construction.

T203 Trails

T203.1 General. Where trails connecting to designated trailheads or accessible trails are provided, they shall comply with T303. Where elements or spaces are provided on trails complying with T303, they shall comply with the applicable requirements of Chapter T2 and Chapter T3.

Advisory T203.1 General. These technical provisions apply only to newly designed and constructed trails, and altered portions of existing pedestrian trails that connect to an accessible trail or designated trailhead. Where new trails connect to existing inaccessible trails or do not connect to a designated trailhead, the technical provisions do not apply. However, trails should not be intentionally separated from an accessible trail or designated trailhead to avoid the technical provisions. Accessible elements complying with T306 through T322 located along a trail are not required to be connected by an outdoor recreation access route.

Trails include, but are not limited to, a trail through a forested park, a shared use path, or a back country trail. Trails covered by section T203 do not include pathways such as sidewalks, pathways in amusement parks, commercial theme parks, carnivals, or between buildings on college campuses. These exterior accessible routes are covered by the revised ABA accessibility guidelines.

A trail designed, designated, and constructed for pedestrian use may also have other uses, such as bicycling or in-line skating. Section T203 applies only to trails where travel on foot is one of the designated uses for which the trail was created. For example, a trail designed specifically for mountain biking would not be considered a "pedestrian trail" whether or not pedestrians actually use the trail. However, a multi-use trail designated for both hiking and mountain biking would be considered a pedestrian trail and subject to these provisions.

Many trails are used as non motorized transportation facilities. Users may include bicyclists and skaters as well as pedestrians. The accessibility guidelines for outdoor developed areas apply to these trails. However, bicyclists and skaters have design needs that may exceed the minimum guidelines for trails in some areas. Where there are differences, the more stringent provision should be applied.

T204 Outdoor Recreation Access Routes

T204.1 General. Outdoor recreation access routes shall be provided in accordance with T204 and shall comply with T304.

T204.2 Where Required. At least one outdoor recreation access route complying with T304 shall connect accessible elements and spaces within the area.

EXCEPTIONS: 1. Elements located on trails shall not be required to be connected by an outdoor recreation access route.

2. Where multiple picnic tables are provided in an area, at least 40 percent, but no fewer than two, of the picnic tables required by T206.2.2 shall be on an outdoor recreation access route.
3. Where multiple fire rings are provided in an area, at least 40 percent, but no fewer than two, of the fire rings required by T207.2.2 shall be on an outdoor recreation access route.
4. Where multiple cooking surfaces are provided in an area, at least 40 percent, but no fewer than two, of the cooking surfaces required by T208.2.2 shall be on an outdoor recreation access route.
5. Where multiple benches are provided in an area, at least 40 percent, but no fewer than two, of the benches required by T213.2.2 shall be on an outdoor recreation access route.

T204.3 Location. Outdoor recreation access routes shall coincide with or be located in the same area as general circulation paths.

T205 Beach Access Routes

T205.1 General. Beach access routes shall be provided in accordance with T205 and shall comply with T305.

T205.2 Where Required: New Beach. Where a beach is newly constructed, a minimum of one beach access route complying with T305 shall be provided for every one-half mile of linear feet of new beach.

T205.3 Where Required: Existing Beach. Where a route is provided for pedestrian use and constructed from a developed site to, or along the edge of, an existing beach, a beach access route complying with T305 shall be provided.

EXCEPTIONS: 1. A temporary beach access route shall be permitted.
2. Routes which are created solely for shoreline maintenance shall not be required to comply with T205.
3. Routes provided solely as undeveloped public easements shall not be required to comply with T205.
4. Where a beach access route exists within one-half mile and is within the beach of the same jurisdiction, a beach access route shall not be required.
5. When existing beaches are replenished for beach nourishment, a beach access route shall not be required.
6. A beach access route shall not be required where a route provided for pedestrian use along the edge of an existing beach is elevated 6 inches (150 mm) or higher above the beach surface.

T205.4 Location. Beach access routes shall coincide with or be located in the same area as general circulation paths.

T206 Picnic Tables

T206.1 General. Where picnic tables are provided, they shall comply with T206.

T206.2 Minimum Number

T206.2.1 Single Picnic Tables. Where one picnic table is provided in an area, the picnic table shall comply with T306.

T206.2.2 Multiple Picnic Tables. Where two or more picnic tables are provided in an area, at least 50 percent, but no fewer than two, of the picnic tables shall comply with T306.

Advisory T206.2.2 Multiple Picnic Tables. Where two or more fixed picnic tables are provided in a picnic area, at least 50 percent, but never less than two, must comply with T306. An "area" refers to a designated location where picnic related elements are located. Areas may be separated and include different settings on the same site. For example, a picnic area located next to a lake in a park is considered a separate picnic area from a pavilion with numerous picnic tables within the same park. Picnic areas may also be separated and designated by a name or connected to a separate entrance.

T206.3 Dispersion. Picnic tables required by T206.2 shall be dispersed among the types of settings or opportunities provided. This provision shall not require an increase in the total number of picnic tables required by T206.

T206.4 Number of Wheelchair Spaces. Each picnic table required by T206.2 shall have at least one wheelchair space complying with T306.2. Where the table top perimeter exceeds 24 linear feet, wheelchair spaces shall be provided in accordance with Table T206.4.

Table T206.4 Wheelchair Spaces

Table Top Perimeter	Minimum Number of Wheelchair Spaces
25 lf -44 lf	2 spaces
45 lf - 64 lf	3 spaces
65 lf - 84 lf	4 spaces
85 lf - 104 lf	5 spaces

T207 Fire Rings

T207.1 General. Where provided, fire rings shall comply with T207.

T207.2 Minimum Number

T207.2.1 Single Fire Ring. Where one fire ring is provided in an area, the fire ring shall comply with T307.

T207.2.2 Multiple Fire Rings. Where two or more fire rings are provided in an area, at least 50 percent, but no fewer than two, of the fire rings shall comply with T307.

T207.3 Dispersion. Fire rings required by T207.2 shall be dispersed among the types provided. This provision does not require an increase in the total number of fire rings required by T207.2.

T208 Cooking Surfaces, Grills, and Pedestal Grills

T208.1 General. Where provided, cooking surfaces, grills, and pedestal grills shall comply with T208.

T208.2 Minimum Number

T208.2.1 Single Cooking Surface. Where one cooking surface, grill, or pedestal grill is provided in an area, the cooking surface, grill, or pedestal grill shall comply with T308.

T208.2.2 Multiple Cooking Surfaces. Where two or more cooking surfaces, grills, or pedestal grills are provided in an area, at least 50 percent, but no fewer than two, of the cooking surfaces, grills, or pedestal grills shall comply with T308.

T208.3 Dispersion. Cooking surfaces required by T208.2 shall be dispersed among the types provided. This provision does not require an increase in the total number of cooking surfaces required by T208.2.

T209 Trash and Recycling Containers

T209.1 General. Where trash and recycling containers are provided, each trash or recycling container shall comply with T309.

EXCEPTION: Fifty percent of the bins in multi-bin containers shall not be required to comply with T309.

T210 Wood Stoves and Fireplaces

T210.1 General. Where wood stoves and fireplaces are provided, each wood stove and fireplace shall comply with T310.

T211 Overlooks and Viewing Areas

T211.1 General. Where viewing areas are provided on designated overlooks, each viewing area shall comply with T311.

EXCEPTION: Where multiple viewing areas are provided at a designated overlook, at least one of each viewing opportunity for distinct points of interest shall be required to comply with T311.3.

T212 Telescopes and Periscopes

T212.1 General. Where telescopes or periscopes are provided in an area, at least 20 percent, but no fewer than one, of the telescopes or periscopes shall comply with T312. Where only one telescope or periscope is provided, it shall comply with T312 and shall also be usable from the standing position.

T213 Benches

T213.1 General. Where provided, benches shall comply with T213.

T213.2 Minimum Number.

T213.2.1 Single Bench. Where one bench is provided in an area, the bench shall comply with T313.

T213.2.2 Multiple Benches. Where two or more benches are provided in an area, at least 50 percent of the benches shall comply with T313.1 through T313.4. At least 50% of the benches required by T213.2.2 shall also comply with T313.5.

T213.3 Dispersion. Benches required by T213.2 shall be dispersed among the types provided. This provision does not require an increase in the total number of benches required by T213.2.

T214 Utility Sinks

T214.1 General. Where utility sinks are provided, at least 5 percent, but no fewer than one of each type of utility sinks provided in each area shall comply with T314.

T215 Mobility Device Storage Facilities

T215.1 General. Where storage facilities are provided and individuals using wheelchairs or other individual mobility devices transfer from one individual mobility device to another individual mobility device, at least one storage facility shall comply with T315.

T216 Pit Toilets

T216.1 General. Where pit toilets are provided, each pit toilet shall comply with T316.

T217 Utilities

T217.1 General. Where provided, electric, water, sewage and other similar type utilities serving accessible elements shall comply with T317.

T218 Camping Facilities

T218.1 General. Where recreational camping vehicle or trailer spaces, tent camping spaces, or camping shelters are provided, they shall comply with T218.

T218.2 Minimum Number. Recreational camping vehicle or trailer spaces, tent camping spaces, and camping shelters shall be provided in accordance with Table T218.2. Where picnic tables, fire rings, utilities, or other elements are provided in camping spaces required by T218.2, they shall comply with the applicable provisions of Chapters T2 and T3.

Table T218.2 Camping Spaces

Number of Camping Spaces	Minimum Number of Accessible Camping Spaces
1	1
2 to 25	2
26 to 50	3
51 to 75	4
76 to 100	5
101 to 150	7
151 to 200	8
201 to 300	10
301 to 400	12
401 to 500	13
501 to 1000	2 percent of total
1001 and over	20, plus 1 for each 100 over 1000

T218.2.1 Recreational Camping Vehicle and Trailer Spaces. Recreational camping vehicle or trailer spaces required by T218.2 shall comply with T318.2.1 and T318.2.4.

EXCEPTION: Where camping spaces are designed for both tent camping and recreational camping vehicle or trailer use, at least 50 percent of the multi-use spaces required by T218 shall comply with T218.2.1 and the remainder shall be permitted to comply with T218.2.2.

T218.2.2 Tent Camping Spaces and Camp Shelters. Tent camping spaces and camp shelters required by T218.2 shall comply with T318.2.2, T318.2.4, and T318.3.

T218.3 General Use Parking Areas. In campgrounds with recreation camping vehicle or trailer spaces, at least one recreational camping vehicle or trailer parking space complying with T318.2.3 and T318.2.4 shall be provided in each general use parking area.

EXCEPTION: Recreational camping vehicle or trailer parking provided within individual camping spaces shall not be required to comply with T218.3.

T219 Warming Huts

T219.1 General. Where warming huts are provided, each warming hut shall comply with T319.

T220 Outdoor Rinsing Showers

T220.1 General. Where provided, outdoor rinsing showers shall comply with T220.

Advisory T220.1 Outdoor Rinsing Showers. Outdoor showers are usually rinsing facilities that permit people to wash off sand, water, dirt, or debris. They are not designed for bathing, as they generally do not offer privacy and people are usually not permitted to disrobe.

T220.2 Minimum Number.

T220.2.1 Single Rinsing Shower. Where one rinsing shower is provided, the rinsing shower shall comply with T320.1 through T320.4, and shall have a low shower spray head complying with T320.5 and a high shower spray head complying with T320.6.

T220.2.2 Multiple Rinsing Showers. Where two or more rinsing showers are provided at a location, at least one shall comply with T320.1 through T320.4 and shall have a low shower spray head complying with T320.5, and at least one shall comply with T320.1 through T320.4 and shall have a high shower spray head complying with T320.6.

T221 Signs

T221.1 Trails. Trails and trail segments complying with T303 shall be identified by signs complying with T321.2.

T221.2 Camping Spaces. Camping spaces complying with T318 shall be identified by signs complying with T321.3.

EXCEPTIONS: 1. Where all camping spaces in an area comply with T318, signs complying with T321.3 shall not be required.

2. Where camping spaces are assigned upon arrival or through a reservation system, signs complying with T321.3 shall not be required.

T222 Protruding Objects

T222.1 General. Protruding objects on trails, outdoor recreation access routes, and beach access routes shall comply with T322.

CHAPTER T3: TECHNICAL PROVISIONS

T301 General

T301.1 Scope. The provisions of Chapter T3 shall apply where required by Chapter T2 or where referenced by a requirement in this document.

T302 Conditions for Exceptions

T302.1 General. Where any of the conditions in T302 applies, the specific exceptions to the technical provisions in Chapter T3 shall be permitted. The conditions in T302 do not obviate or limit in any way the obligation to comply with the technical provisions in Chapter T3 at any point where the conditions do not apply.

> **Advisory T302.1 Conditions for Exceptions.** The conditions in T302 permit specific exceptions technical provision by technical provision and do not provide an overall exemption for the entire trail or outdoor element. A specific exception to a technical provision can be used only on that portion of the trail where the condition exists. For example, an exception to T303.4 permits the width of a trail to be reduced where a significant natural feature is located. However, the width of the trail before and after the significant area must meet T303.4, and all other technical provisions (except width where the significant natural feature is located) will apply throughout the full length of the trail.

Conditions 1. Compliance would cause substantial harm to cultural, historic, religious, or significant natural features or characteristics.

> **Advisory T302.1 Condition 1.** Compliance would cause substantial harm to cultural, historic, religious, or significant natural features or characteristics. Examples of this condition include areas protected under Federal, State, or local laws, with species designated as threatened or endangered, or with designated wetlands that could be threatened or destroyed by full compliance with the technical provisions. Significant cultural features may include areas such as archaeological sites, sacred lands, burial grounds and cemeteries, or Indian tribal protected sites. Significant historical features may include properties on or eligible for the National Register of Historical Places or other places of recognized historic value. Significant religious features may include sites sacred to Native Americans and other properties designated or held sacred by an organized religious belief or church. Significant natural features may include a large rock outcrop or a unique water feature.

2. Compliance would substantially alter the nature of the setting or the purpose of the facility, or portion of the facility.

> **Advisory T302.1 Condition 2.** Compliance would substantially alter the nature of the setting or the purpose of the facility, or portion of the facility. Examples of this condition include a trail intended to provide a rugged experience such as a cross country training trail

with a steep grade or a challenge course with abrupt and severe changes in level, where compliance with certain technical provisions would not provide the intended and desired level of challenge and difficulty to users. Other examples include trails that traverse over boulders and rocky outcrops where the purpose of the trail is to provide people with the opportunity to climb rocks. To remove the obstacles along the way or reroute the trail around the rocks would destroy the purpose of the trail.

Furthermore, compliance is not intended to negatively impact the unique characteristics of the natural setting. People using primitive trails, for example, expect to experience the outdoor environment in a more natural state with limited or no development. Evidence of manufactured building materials or engineered construction techniques in such a setting could change its primitive character, and therefore, the user's experience. In these settings, compliance with specific technical provisions, for example those related to surface and tread obstacles, could destroy the 'natural' or 'undeveloped' nature of the setting. Actions may also compromise the 'nature of the setting' such as constructing an imported surface on a trail in a remote location or removing ground vegetation in meadows or alpine areas.

3. Compliance would require construction methods or materials that are prohibited by federal, state, or local regulations or statutes.

Advisory T302.1 Condition 3. Compliance would require construction methods or materials that are prohibited by Federal, State, or local regulations or statutes. Restrictions to protect or address environmental concerns imposed by Federal statutes such as the Wilderness Act, Endangered Species Act, and State and local statutes may permit exceptions to the technical provisions in Chapter T3. For example, Federally designated and some State designated Wilderness Areas prohibit the use of mechanized equipment, limiting construction methods to hand tools. In other areas, imported materials may be prohibited to maintain the integrity of the natural ecosystem. This condition is not intended to automatically exempt organizations restricted under regulations or statutes from the technical provisions in Chapter T3.

Many aquatic features protected under Federal or State laws have limited allowable construction practices. For example, a constructed water crossing required under the technical provisions might not be permitted under certain laws or regulations. Construction methods and materials employed in designated wetlands or coastal areas are also strictly limited.

"Local regulations and statutes" address conditions where "conservation easement" or "development rights" programs prohibit or restrict construction methods and practices. For example, where land is purchased from farms, certain use restrictions may prohibit the importation of surfacing materials. On the other hand, local regulations or statutes may not be developed or initiated with the sole purpose of prohibiting use by people with disabilities. For example, initiating a new local regulation that arbitrarily restricts trail width to a dimension that would not allow passage of wheelchairs or other mobility devices is not permitted under this condition.

4. Compliance would not be feasible due to terrain or the prevailing construction practices.

Advisory T302.1 Condition 4. Compliance would not be feasible due to terrain or the prevailing construction practices. The term "not feasible" is used in this condition to specify what is "reasonably do-able." It does not refer to the technical feasibility of complying with the technical provisions. For example, providing a trail with a 1:20 slope or less up a 1,500 foot tall mountain using heavy construction equipment may be feasible, but the trail would be at least 5.8 miles long (rather than 2 miles long under a traditional back-country layout), and may cause inappropriate environmental and visual impacts. The intent of this condition is to recognize that the effort and resources required to comply would be disproportionately high in relation to the level of access created. Although technically feasible, the effort and resources required are not "reasonable."

For example, complying with the technical provisions for running slope (T303.8.2) in areas of steep terrain may require extensive cuts or fills that would be difficult to construct and maintain, or cause drainage and erosion problems. Also, in order to construct a trail on some steep slopes, the trail may become significantly longer causing a much greater impact on the environment. Certain soils are highly susceptible to erosion. Another example might be in areas where soils expand and dramatically contract with water content. If compliance requires techniques that conflict with the natural drainage or existing soil, the trail would be difficult, if not impossible, to maintain.

This condition may also apply where construction methods for particularly difficult terrain or an obstacle would require the use of equipment other than that otherwise used throughout the length of the trail (i.e., techniques different from prevailing construction practices). One example is requiring the use of a bulldozer to remove a rock outcropping when hand tools are the commonly used method of construction for that trail.

Another example might be where compliance with the provision for a firm and stable surface (T303.3) conflicts with the prevailing construction practices by requiring the importation of a new surfacing material that would not otherwise have been used. If the prevailing construction practices would not include the importation of a new surface material and the natural surface material could not be made firm and stable, the trail would not be required to comply with that specific provision.

Trail construction practices vary greatly, from the use of volunteer labor and hand tools, to professional construction with heavy mechanized equipment. For alterations to an existing trail, the "prevailing construction practices" are the methods typically used for construction or maintenance of the trail. The available resources and the environmental conditions (e.g., soil type and depth, vegetation, natural slope) primarily determine the "choice" of construction practices (e.g., machinery, skilled operators, finances). The intent of this condition is to ensure that compliance with the technical provisions does not require the use of construction practices that are beyond the skills and resources of the trail building organization. It is not intended to automatically exempt an organization from the technical provisions simply because of a particular construction practice (e.g., the use of hand tools), or to suggest that hand tools can be selected as the tool of choice to avoid compliance when more expedient methods and resources are available.

T303 Trails

T303.1 General. Trails shall comply with T303.

T303.2 General Exception. Where applying the specific exceptions to the technical provisions in T303 results in any of the conditions in T303.2, the trail shall not be required to comply with T303 beyond the first point where the specific exceptions apply. The segment of the trail between the trailhead and the first point where the specific exceptions apply shall comply with T303 unless the trail segment is 500 feet (150 m) or less in length. Where there is a prominent feature less than 500 feet (150 m) from the trailhead, the trail segment between the trailhead and the prominent feature shall comply with T303.

Conditions 1. The combination of running slope and cross slope exceeds 40 percent for over 20 feet (6100 mm).

2. A trail obstacle 30 inches (760 mm) high or more runs across the full tread width of the trail.

3. The trail surface is neither firm nor stable for a distance of 45 feet (14 m) or more.

4. The tread width is less than 12 inches (305 mm) wide for a distance of 20 feet (6100 mm) or more.

5. The trail is not required to comply with any of the technical provisions in T303 for more than 15 percent of the length of the trail.

T303.3 Surface. The trail surface shall be firm and stable.

EXCEPTION: Where a firm and stable surface cannot be provided because any of the conditions in T302 applies, the surface shall not be required to comply with T303.3.

Advisory T303.3 Surface. Trail surfaces are required to be firm and stable. There is a spectrum of surfaces considered firm and stable and appropriate surfaces are not limited to surfacing materials such as asphalt and concrete. Many naturally occurring surfaces, such as crushed aggregate or soils containing some clay and a spectrum of sieve sizes, are considered firm and stable. Other natural surfaces may also become firm and stable when combined with a stabilizing agent. Wood planks, stone, grass, and packed dirt may also be considered firm and stable. The degree of firmness and stability may vary depending on the intended use and the expected direction and length of travel.

Preliminary information obtained through a small research project on accessible exterior surfaces conducted for the Access Board suggests that surfaces considered "firm" (i.e., does not give way significantly under foot) can range from very firm to moderately firm (defined in table A.) Similarly, surfaces considered stable (i.e., do not shift from side-to-side or when turning) can range from very stable to moderately stable.

The degree of firmness and stability desired or most appropriate is related to the intended use of the trail, the predominant direction of travel, and the overall length of the trail. For example, a surface which is both very firm and very stable, is recommended for trails of more than .5 mile in length due to the duration of travel for a person with a disability. However, it may be acceptable for the surface to be moderately firm (rather than very firm) (using calculations and classifications in Table A below) for trails less than .5 mile but greater than .1 mile in length, and where the travel pattern is primarily linear. It may also be

acceptable for the surface to be both moderately firm and moderately stable for trails less than .1 mile in length, and where the trail is moderately level (< 3% slope).

Table A Calculation and Classification

Firmness Classification	**Amount of Penetration**
Very Firm	0.3 inches or less
Moderately Firm	Greater than 0.3 inches and less than 0.5 inches
Not Firm	Greater than 0.5 inches
Stability Classification	**Amount of Penetration**
Stable	0.5 inches or less
Very Stable	Greater than 0.5 inches and less than 1.0 inch
Not Stable	Greater than 1.0 inch

Surfaces that are moderately firm or stable may be appropriate in areas where a cushioned surface is preferred (e.g., for a multi use trail that includes equestrians). Surfaces that are moderately firm and stable may also be appropriate on trails for winter use only because most trail surfaces are very firm and stable when frozen. Surfaces with a high degree of firmness and stability are critical for long distance trails so users may expend a minimum amount of energy over a given distance. A high degree of stability would be desirable for areas with multi-directional traffic.

The following test methodology is based on a preliminary test procedure for the measurement of surface firmness and stability which is one of the ways that firmness and stability can be measured. For more information, consult the "Accessible Exterior Surfaces Technical Report" available through the Access Board. (www.access-board.gov)

The recommended test equipment for determining firmness and stability on outdoor surfaces is the rotational penetrometer, a device consisting of three main components: penetrator, frame, and reference base. The penetrator consists of an 8 by 1 ¼ inch (20 cm by 3 cm) pneumatic caster and a means to press the caster into the surface with a known force. The frame is an attachment to the reference base that provides a means for allowing the penetrator to move freely, perpendicular to the reference base. The reference base is a flat, rigid, surface used to position and anchor the testing equipment relative to the test surface. It has an area through which the penetrator can pass and rotate freely without hindering the movement of the surface material being tested or interfering with the test results. The reference base may also provide a platform for the device operator during testing. The rotational penetrometer is instrumented with a method to measure the amount of vertical displacement of the penetrator into the test surface.

To test surface firmness and stability, the rotational penetrometer is placed on the surface to be tested. A person stands on the reference base of the rotational penetrometer to stabilize its position during testing. The penetrator is lowered onto the test surface and an initial vertical displacement measurement is taken. A load of 44 ± 1 pound (20 ± 0.5 kg) is applied to the penetrator and then a second measurement of the amount of vertical displacement is completed. Then, with the load still applied, the penetrator caster is rotated through four 90 degree rotations about an axis perpendicular to the surface, alternating the direction of rotation (clockwise, counter-clockwise) after each 90 degree rotation. The final amount of vertical displacement is then measured. This test procedure is repeated on the same surface in a different test area until a total of five trials have been completed.

T303.4 Clear Tread Width. The clear tread width of trails shall be 36 inches (915 mm) minimum.

EXCEPTIONS: 1. Where 36 inches (915 mm) minimum clear tread width cannot be provided because any of the conditions in T302 applies, the clear tread width shall be permitted to be reduced to no less than 32 inches (815 mm) minimum.

2. Where 32 inches (815 mm) minimum clear tread width cannot be provided because any of the conditions in T302 applies, the clear tread width shall not be required to comply with T303.4.

Advisory T303.4 Clear Tread Width. The clear tread width of the trail is the width of the usable trail tread. It should be measured perpendicular to the direction of travel and on or parallel to the surface of the usable trail tread. The clear tread width should be measured at intervals no greater than 100 feet (30.5 m).

The minimum clear width of the trail is the width of the usable trail where obstructions restrict the clear tread width and where there is no alternate route to bypass the narrow area. The minimum clear width should be measured at the narrowest point on the trail or trail segment, perpendicular to the direction of travel and on or parallel to the surface of the usable trail tread.

T303.5 Openings. Openings in trail surfaces shall be of a size that does not permit passage of a ½ inch (13 mm) diameter sphere. Elongated openings shall be placed so that the long dimension is perpendicular or diagonal to the dominant direction of travel.

EXCEPTIONS: 1. Elongated openings shall be permitted to be parallel to the dominant direction of travel provided the opening does not permit passage of a ¼ inch (6.5 mm) diameter sphere.

2. Where openings that do not permit passage of a ½ inch (13 mm) diameter sphere cannot be provided because any of the conditions in T302 applies, openings shall be permitted to be of a size that does not permit passage of a ¾ inch (19 mm) diameter sphere.

3. Where openings that do not permit passage of a ¾ inch (19 mm) diameter sphere cannot be provided because any of the conditions in T302 applies, the openings in trail surfaces shall not be required to comply with T303.5.

T303.6 Tread Obstacles. Where tread obstacles exist on trails, the obstacles shall not exceed 2 inches (50 mm) high maximum.

EXCEPTIONS: 1. Where running and cross slopes are 1:20 or less, tread obstacles shall be permitted to be 3 inches (75 mm) high maximum.

2. Where tread obstacles greater than 3 inches (75 mm) high exist because any of the conditions in T302 applies, the tread obstacles shall not be required to comply with T303.6.

Advisory T303.6 Tread Obstacles. Tread obstacles are natural features, such as roots, rocks, and ruts that cannot be avoided. The trail tread corridor is the area on or above the usable trail tread and below the specified design height for the trail. The dimensions of the tread obstacle within the trail tread corridor are as follows:

Width - the size of the obstacle within the trail tread corridor, measured perpendicular to the direction of travel

Length - the size of the obstacle within the trail tread corridor, measured parallel to the direction of travel

Height - the vertical dimension of the tread obstacle, measured from the trail surface to the top or bottom of the obstacle; and

Remaining clear tread width - the remaining tread corridor that is available to traverse around or past the obstacle, should also be measured perpendicular to the direction of travel.

T303.7 Passing Space. Where the clear tread width of trails is less than 60 inches (1525 mm), passing spaces shall be provided at intervals of 1000 feet (300 m) maximum. Passing spaces shall be either a 60 inches (1525 mm) minimum by 60 inches (1525 mm) minimum space, or an intersection of two walking surfaces which provide a T-shaped space complying with T402.1.2 provided the arms and stem of the T-shaped space extend at least 48 inches (1220 mm) beyond the intersection.

EXCEPTION: Where passing spaces cannot be provided because any of the conditions in T302 applies, passing spaces shall not be required.

Advisory T303.7 Passing Space. Passing spaces are required on trails a minimum of every 1000 feet (305 m). However, if a clear tread width less than 60 inches (1525 mm) occurs in an area where users cannot easily move off the trail tread, such as a boardwalk or other surface that is not at the same level as the surrounding natural ground surface or where noxious plants are adjacent to the trail tread, passing spaces should be provided at more frequent intervals. The provision of more frequent passing spaces should also be considered in areas with steep or difficult terrain or limited sight lines, so that users do not have to back up long distances to reach a passing space. More frequent passing spaces should also be considered on trails with heavier use, especially closer to trailheads and prominent features. If a bridge less than 60 inches (1525 mm) wide is provided, a 60 inches by 60 inches (1525 mm by 1525 mm) minimum passing space should be provided at either end of the bridge. Passing spaces may be located to one side of the trail and co-located with resting intervals.

T303.8 Slopes. Slopes shall comply with T303.8.1 and T303.8.2.

EXCEPTIONS: 1. For open drainage structures, a running slope of 1:7 shall be permitted for 5 feet maximum (1525 mm) with a cross slope of 1:20 maximum. Cross slope shall be permitted to be 1:10 at the bottom of the open drain provided the clear tread width is 42 inches (1065 mm) minimum.

2. Where slopes cannot comply with T303.8 because any of the conditions in T302 applies, the requirements of T303.8 shall not apply.

T303.8.1 Cross Slope. The cross slope shall not exceed 1:20 maximum.

Advisory T303.8.1 Cross Slope. Trail cross slope is the angle of the trail tread perpendicular to the direction of travel (the side to side slope of the trail). The recommended unit of measurement is percent or rise over run (e.g., 2% or 1:50). Cross slope measurements should be determined across a 24 in (610 mm) width, at intervals not exceeding 100 ft (30.5 m) in length, from the trail head to the destination. Cross slope measurements are taken perpendicular to the path of travel over the most level section of tread at each point. Additional information on measuring maximum trail cross slope is provided in Advisory T222.1 Trail Signs.

T303.8.2 Running Slope. The running slope shall comply with one or more of the provisions in T303.8.2. No more than 30 percent of the total trail length shall exceed a running slope of 1:12.

T303.8.2.1 Running slope shall be 1:20 or less for any distance.

T303.8.2.2 Running slope shall be 1:12 maximum for 200 feet (61 m) maximum. Resting intervals complying with T303.9 shall be provided at distances no greater than 200 feet (61 m) apart.

T303.8.2.3 Running slope shall be 1:10 maximum for 30 feet (9150 mm) maximum. Resting intervals complying with T303.9 shall be provided at distances no greater than 30 feet (9150 mm) apart.

T303.8.2.4 Running slope shall be 1:8 maximum for 10 feet (3050 mm) maximum. Resting intervals complying with T303.9 shall be provided at distances no greater than 10 feet (3050 mm) apart.

Advisory T303.8.2 Running Slope. The running slope represents the steepness of individual segments of a trail and should be measured parallel to the direction of travel. The recommended unit of measurement is percent or rise over run (e.g., 2% or 1:50). Uphill and downhill trail segments should be measured separately. The distance measured may be as short as 10 feet (3.1m), but should not exceed 100 feet (30.5m) in length. The running slope should be measured for each consecutive trail segment, from the trail head to the destination.

Uphill trail segments and downhill trail segments should not be located sequentially. A sudden grade change without a transition creates difficulties for wheelchair users. If there is no transition, there may be insufficient ground clearance. Then the footrests or anti-tip wheels may get caught on the surface. A sudden grade change without enough of a transition may cause a rapid weight transfer, causing an individual using a wheelchair to lose dynamic stability. Therefore, uphill and downhill trail segments should be separated by a relatively level transition segment with a slope no greater than 1:20.

Handrails are not required on trails, even where a maximum running slope occurs. To counterbalance the lack of handrails, the length of steep trail segments permitted is limited and resting intervals are required. Where handrails are provided on a trail, they should comply with the ABA Accessibility Guidelines.

It is recommended that the use of steps as an alternative route (i.e., in addition to the trail tread surface) be considered for areas where the running slope exceeds 10 percent, significant changes in elevation are required over a short distance, or significant changes in elevation occur repeatedly along a trail. Providing steps will improve trail conditions for ambulatory people with disabilities, such as those who use crutches or walkers and those with heart or respiratory conditions.

Slope represents the proportion of vertical rise to horizontal length and can be represented as a ratio, percentage, pitch or in degrees.

Rise:Length	Percent	Pitch	Degree
1:8	12.50	0.1250	7.13
1:10	10.00	0.1000	5.71
1:12	8.33	0.0833	4.76
1:13	7.69	0.0769	4.40
1:14	7.14	0.0714	4.09
1:15	6.67	0.0667	3.81
1:16	6.25	0.0625	3.58
1:17	5.88	0.0588	3.37
1:18	5.55	0.0555	3.18
1:19	5.26	0.0526	3.01
1:20	5.00	0.0500	2.86
1:50	2.00	0.0200	1.15

T303.9 Resting Intervals. Resting intervals shall be 60 inches (1525 mm) long minimum, shall be at least as wide as the widest portion of the trail segment leading to the resting interval, and shall have a slope not exceeding 1:20 in all directions.

EXCEPTION: Where resting intervals cannot be provided because any of the conditions in T302 applies, resting intervals shall not be required.

Advisory T303.9 Resting Intervals. Resting intervals should be provided between uphill and downhill trail segments if the running slope for either segment exceeds 1:12, as well as at intervals on a continuous slope as specified by T303.8.2. Resting intervals should be positioned so that a smooth, gradual transition is provided between running slope segments. Resting intervals may be located within the trail tread. However, locating the resting interval outside of the main path of travel will ensure that users who are resting are not at risk of collisions with other trail users. More frequent resting intervals should be considered on trails with heavier use, and especially close to trailheads and prominent features. Resting intervals may be located to one side of the trail, or co-located with passing spaces.

T303.10 Edge Protection. Where edge protection is provided, the edge protection shall be 3 inches (75 mm) high minimum.

Advisory T303.10 Edge Protection. If edge protection is provided, a 3 inch (75 mm) minimum height is required. The higher edge protection is required because trail surfaces are likely to have natural variations in the height of the surface. As a result, people with limited vision using navigation canes may search or scan at a higher level in natural outdoor environments than they would in an indoor environment. The higher edge protection will assist in its detection and identification and help to distinguish it from variations in the natural surface of the outdoor environment.

Regardless of the orientation or design of the edge protection, the height of edge protection provided on a trail should be measured in the vertical dimension to the highest point on the edge protection. Where edge protection is provided, small openings may be placed at the base of the edge protection close to the trail surface to allow water to drain off the trail. Care should be taken to clear debris that may build up along the edge protection.

T304 Outdoor Recreation Access Routes

T304.1 General. Outdoor recreation access routes shall comply with T304.

T304.2 Surface. The surface of outdoor recreation access routes shall be firm and stable.

Advisory T304.2 Surface. The degree of firmness and stability desired or most appropriate is related to the intended use of an outdoor recreation access route, the predominant direction of travel and the overall length of the outdoor recreation access route. For example, a surface which is both very firm and very stable, is recommended for outdoor recreation access routes of more than .5 mile in length due to the duration of travel for a person with a disability. However, it may be acceptable for the surface to be moderately firm (rather than very firm) (using calculations and classifications in the advisory for T303.3, Table A) for outdoor recreation access routes less than .5 but greater than .1 mile in length, and where the travel pattern is primarily linear. It may also be acceptable for the surface to be both moderately firm and moderately stable for outdoor recreation access routes less than .1 miles in length, and where the outdoor recreation access route is moderately level (<3% slope). See advisory for T303.3 for test methods related to firmness and stability.

T304.3 Clear Tread Width. The clear tread width of outdoor recreation access routes shall be 36 inches (915 mm) minimum.

EXCEPTION: Where 36 inches (815 mm) minimum clear tread width cannot be provided because any of the conditions in T302 applies, the clear tread width shall be permitted to be reduced to no less than 32 inches (815 mm) minimum for a distance of 24 inches (610 mm) maximum.

T304.4 Openings. Openings in the surfaces of outdoor recreation access routes shall be of a size that does not permit passage of a 1/2 inch (13 mm) diameter sphere. Elongated openings shall be placed so that the long dimension is perpendicular or diagonal to the dominant direction of travel.

EXCEPTION: Elongated openings shall be permitted to be parallel to the dominant direction of travel provided the opening does not permit passage of a 1/4 inch (6.5 mm) diameter sphere.

T304.5 Tread Obstacles. Where tread obstacles exist on outdoor recreation access routes, the obstacles shall not exceed 1 inch (25 mm) high maximum.

EXCEPTION: Where tread obstacles greater than 1 inch (25 mm) high exist because any of the conditions in T302 applies, tread obstacles shall be permitted to be 2 inches (50 mm) high maximum provided they are beveled with a slope no greater than 1:2.

Advisory T304.5 Tread Obstacles. Beveling is only recommended where prevailing construction practices permit the use of hardened surfaces. Beveling with dirt or other natural surfaces is generally not effective because the beveled surface will quickly erode. For example, if a root or rock is not beveled with concrete or a similar imported surface, the dirt will quickly erode and the benefit of the beveling will be lost. Tread obstacles should be avoided as much as possible, because they may pose a tripping hazard.

T304.6 Passing Space. Where the clear tread width of outdoor recreation access routes is less than 60 inches (1525 mm), passing spaces shall be provided at intervals of 200 feet (61 m) maximum. Passing spaces shall be either a 60 inches (1525 mm) minimum by 60 inches (1525 mm) minimum space, or an intersection of two walking surfaces which provide a T-shaped space complying with T402.1.2 provided the arms and stem of the T-shaped space extend at least 48 inches (1220 mm) beyond the intersection.

EXCEPTION: Where passing spaces cannot be provided at intervals of 200 feet (61 m) maximum because any of the conditions in T302 applies, passing spaces shall be permitted at intervals of 300 feet (91 m) maximum.

Advisory T304.6 Passing Space. An outdoor recreation access route less than 60 inches (1525 mm) wide may need more frequent passing spaces depending on use, or if the surface is constructed on a boardwalk or other surface that is at the same level as the surrounding ground surface. More frequent passing spaces may be needed on heavily used outdoor recreation access routes, especially close to higher use elements. Passing spaces may be located to one side of the trail, or co-located with resting intervals.

T304.7 Slopes. Slopes shall comply with T304.7.1 and T304.7.2.

T304.7.1 Cross Slope. The cross slope shall not exceed 1:33 maximum.

EXCEPTION: Where required for proper drainage, cross slopes not exceeding 1:20 maximum shall be permitted.

Advisory T304.7.1 Cross Slope. Cross slope on an outdoor recreation access route is defined as the angle of the route tread perpendicular to the direction of travel (the side-to-side slope of the route). The recommended unit of measurement is percent or rise over run (e.g., 2% or 1:50). Cross slope measurements should be determined across the most level 24 inch (610 mm) width of the trail. Cross slope measurements should be taken perpendicular to the path of travel at intervals not exceeding 100 feet (30.5 m) in length.

Maximum cross slopes for outdoor recreation access routes represent the sections of the route with the greatest angle of the route tread. Maximum cross slopes should be determined over the most level path of travel along the route.

T304.7.2 Running Slope. The running slope shall comply with one or more of the provisions of T304.7.2.

T304.7.2.1 Running slope shall be 1:20 or less for any distance.

T304.7.2.2 Running slope shall be 1:12 maximum for 50 feet (15 m) maximum. Resting intervals complying with T304.8 shall be provided at distances no greater than 50 feet (15 m) apart.

T304.7.2.3 Running slope shall be 1:10 maximum for 30 feet (9150 mm) maximum. Resting intervals complying with T304.8 shall be provided at distances no greater than 30 feet (9 m) apart.

Advisory T304.7.2 Running Slope. The running slope of an outdoor recreation access route represents the steepness of individual segments of the route and should be measured parallel to the direction of travel. The recommended unit of measurement is percent or rise over run (e.g., 2% or 1:50). The distance measured should not exceed 100 feet (30.5 m) in length. The running slope should be measured for each sequential route segment.

Maximum running slope of an outdoor recreation access route represents the steepest sections of the route. The maximum running slope is measured over a 24 inch (610 mm) distance parallel to the path of travel.

Outdoor recreation access routes are not required to have handrails, even where a maximum running slope occurs. To counterbalance the lack of handrails, the provision for running slope limits the length of steep segments and requires resting intervals. Where handrails are provided, they should comply with the revised ABA Accessibility Guidelines. Uphill segments and downhill segments should not be located sequentially. A sudden grade change without a transition creates difficulties for wheelchair users. If there is no transition, there may be insufficient ground clearance and the footrests or anti-tip wheels may get caught on the surface. A sudden grade change without enough of a transition may cause a rapid weight transfer, causing an individual using a wheelchair to lose dynamic stability. Therefore, uphill and downhill segments should be separated by a relatively level transition segment with a slope no greater than 1:20.

T304.8 Resting Intervals. Resting intervals shall be 60 inches (1525 mm) long minimum, shall be at least as wide as the widest portion of the segment leading to the resting interval, and have a slope not exceeding 1:33 in all directions.

EXCEPTION: Where required for proper drainage, cross slopes not exceeding 1:20 maximum shall be permitted.

Advisory T304.8 Resting Intervals. More frequent resting intervals may be needed on heavily used outdoor recreation access routes, especially close to higher use elements. Resting intervals should be located to one side of the outdoor recreation access route, or co-located with passing spaces.

T304.9 Edge Protection. Where edge protection is provided, the edge protection shall be 3 inches (75 mm) high minimum.

Advisory T304.9 Edge Protection. Where edge protection is provided, small openings may be placed at the base of the edge protection close to the surface of the outdoor recreation access route to allow water to drain off the surface. Care should be taken to clear debris that may build up along the edge protection.

T305 Beach Access Routes

T305.1 General. Beach access routes shall comply with T305.

T305.2 Surface. The surface of beach access routes shall be firm and stable.

Advisory T305.2 Surface. The degree of firmness and stability desired or most appropriate is related to the intended use of the beach access route, the predominant direction of travel, and the overall length of the beach access route. For example, a surface which is both very firm and very stable (using calculations and classifications in Table A in the advisory for T303.3) is recommended for beach access routes of more than .5 mile in length due to the duration of travel for a person with a disability. However, it may be acceptable for the surface to be moderately firm (rather than very firm) for beach access routes less than .5 but greater than .1 mile in length, and where the travel pattern is primarily linear. It may also be acceptable for the surface to be both moderately firm and moderately stable for beach access routes less than .1 mile in length, and where the beach access route is moderately level (<3% slope). See advisory for T303.3 for test methods related to firmness and stability.

T305.3 Location. The beach access route shall extend to the high tide level, mean river bed level, or the normal recreation water level.

T305.4 Clear Width. The clear width of beach access routes shall be 36 inches (915 mm) minimum.

T305.5 Openings. Openings in the surfaces of beach access routes shall be of a size that does not permit passage of a ½ inch (13 mm) diameter sphere. Elongated openings shall be placed so that the long dimension is perpendicular or diagonal to the dominant direction of travel.

EXCEPTION: Elongated openings shall be permitted to be parallel to the dominate direction of travel provided the opening does not permit passage of ¼ inch (6.5 mm) sphere.

T305.6 Obstacles. Obstacles on beach access routes shall not exceed 1 inch (25 mm) high maximum.

T305.7 Passing Space. Where the clear width of beach access routes is less than 60 inches (1525 mm), passing spaces shall be provided at intervals of 200 feet (61 m) maximum. Passing spaces shall be either a 60 inches (1525 mm) minimum by 60 inches (1525 mm) minimum space, or an intersection of two walking surfaces which provide a T-shaped space complying with T402.1.2 provided the arms and stem of the T-shaped space extend at least 48 inches (1220 mm) beyond the intersection.

T305.8 Turning Space. Turning space shall be provided at the high tide level, mean river bed level, normal recreation water level, or end of the beach access route. Turning space shall not overlap with the beach access route and shall be either a 60 inches (1525 mm) minimum by 60 inches (1525 mm) minimum space, or an intersection of two walking surfaces which provides a T-shaped space complying with T402.1.2 provided that the arms and stem of the T-shaped space extend at least 48 inches (1220 mm) beyond the intersection.

T305.9 Slopes. Slopes shall comply with T305.9.1 and T305.9.2.

T305.9.1 Cross Slope. The cross slope shall not exceed 1:33 maximum.

EXCEPTION: Where required for proper drainage, cross slopes not exceeding 1:20 maximum shall be permitted.

T305.9.2 Running Slope. The running slope shall comply with one or more of the provisions in T305.9.2.

T305.9.2.1 Running slope shall be 1:20 or less for any distance.

T305.9.2.2 Running slope shall be 1:12 maximum for 50 feet (15 m) maximum. Resting intervals complying with T304.8 shall be provided at distances no greater than 50 feet (15 m) apart.

T305.9.2.3 Running slope shall be 1:10 maximum for 30 feet (9 m) maximum. Resting intervals complying with T304.8 shall be provided at distances no greater than 30 feet (9 m) apart.

T305.10 Edge Protection. If the drop-off from the beach access route to the beach is 6 inches (150 mm) or higher, the beach access route shall have curbs, walls, railings, or projecting surfaces that prevent people from falling off the route. Edge protection shall be 2 inches (50 mm) high minimum. If the drop-off is greater than 1 inch (25 mm), but less than 6 inches (150 mm), then the edge must be beveled.

T306 Picnic Tables

T306.1 General. Picnic tables shall comply with T306.

> **Advisory T306.1 Picnic Tables.** This provision applies only to picnic tables that are "fixed" to the ground and includes picnic tables attached to the ground by a chain from the table to a concrete footing below ground.

T306.2 Wheelchair Spaces. Wheelchair spaces shall comply with T306.4 and T403. Wheelchair spaces shall provide knee space at least 27 inches (685 mm) high, 30 inches (760 mm) wide, and 19 inches (485 mm) deep. Toe clearance 9 inches (230 mm) high minimum shall extend an additional 5 inches (127 mm) minimum from the knee clearance.

> **Advisory T306.2 Wheelchair Spaces.** The location of the wheelchair space has not been specified in this provision. Where multiple tables are provided, it is recommended that a variety of space placements be included to provide users with a choice such as locating the space in the center of the seating area of the table or at the ends of the tables.

T306.3 Table Clearance. A 36 inches (915 mm) minimum clear space complying with T306.4 shall be provided around the usable portion of the table, measured from the back edge of the seat.

T306.4 Clear Spaces. Clear spaces shall comply with T306.4.

T306.4.1 Surface. The surface of clear spaces shall be firm and stable.
EXCEPTION: Where a firm and stable surface cannot be provided because any of the conditions in T302 applies, the surface of the clear space shall not be required to comply with T306.4.1.

T306.4.2 Slope. The slope of clear spaces shall not exceed 1:50 in all directions.

EXCEPTIONS: 1. Where required for proper drainage, slopes not exceeding 1:33 maximum shall be permitted.

2. Where slopes not exceeding 1:33 maximum cannot be provided because any of the conditions in T302 applies, the slope of the clear space shall not be required to comply with T306.4.2.

Advisory T306.4 Clear Spaces. Ground surfaces in outdoor areas that are level (less than 3% slope in any direction to allow drainage) and where the distances traveled are less than 50 feet (e.g., around a picnic table) should be at least moderately firm and moderately stable (see Table A in section T303.3 and for more information related to test methods for surface firmness and stability).

T307 Fire Rings

T307.1 General. Fire rings shall comply with T307.

T307.2 Clear Space. All usable portions of the fire ring shall be provided with a clear space complying with T306.4 that is 48 inches (1220 mm) deep minimum measured from the fire ring and 48 inches (1220 mm) wide minimum.

EXCEPTION: Where a clear space 48 inches (1220 mm) deep minimum cannot be provided because any of the conditions in T302 applies, the space shall be permitted to be reduced by the minimum necessary but shall not be less than 36 inches (815 mm) deep minimum.

T307.3 Fire Surface Height. The fire building surface shall be 9 inches (230 mm) minimum above the ground or floor surface.

T307.4 Raised Edge. Where a raised edge or curb is provided on a fire ring, the combined distance over the edge or curb down to the fire building surface shall be 24 inches (610 mm) maximum.

T308 Cooking Surfaces, Grills, and Pedestal Grills

T308.1 General. Cooking surfaces, grills, and pedestal grills shall comply with T308.

T308.2 Clear Space. All usable portions of the cooking surface shall be provided with a clear space complying with T306.4 that is 48 inches (1220 mm) deep minimum measured from the cooking surface and 48 inches (1220 mm) wide minimum.

EXCEPTION: Where a clear space 48 inches (1220 mm) deep minimum cannot be provided because any of the conditions in T302 applies, the space shall be permitted to be reduced by the minimum necessary but shall not be less than 36 inches (815 mm) deep minimum.

T308.3 Cooking Surface Height. The cooking surface shall be 15 inches (380 mm) minimum and 34 inches (865 mm) maximum above the ground or floor surface.

T308.4 Operable Parts. Operable parts shall comply with T407.

T309 Trash and Recycling Containers

T309.1 General. Trash and recycling containers shall comply with T309.

T309.2 Clear Space. A clear space complying with T306.4 and T403 shall be provided at trash and recycling containers.

T309.3 Operable Parts. Operable parts shall comply with T407.

EXCEPTION: Hinged lids and controls designed for large animal exclusion shall not be required to comply with T407.3.

> **Advisory T309.3 Operable Parts.** The USDA Forest Service, Technology and Development Center has issued a document which provides information about animal resistant garbage containers. Suggested designs may be useful in complying with these provisions.

T310 Wood Stoves and Fireplaces

T310.1 General. Wood stoves and fireplaces shall comply with T310.

T310.2 Clear Space. All usable portions of the wood stove or fireplace shall be provided with a clear space complying with T306.4 that is 48 inches (1220 mm) deep minimum measured from the wood stove or fireplace and 48 inches (1220 mm) wide minimum.

EXCEPTION: Where a clear space 48 inches (1220 mm) deep minimum cannot be provided because any of the conditions in T302 applies, the space shall be permitted to be reduced by the minimum necessary but shall not be less than 36 inches (815 mm) deep minimum.

T310.3 Operable Parts. Operable parts shall comply with T407.

T311 Overlooks and Viewing Areas

T311.1 General. Overlooks and viewing areas shall comply with T311.

T311.2 Turning Space. The viewing area shall have a turning space complying with T306.4 and T402.

EXCEPTION: Where turning spaces cannot be provided because any of the conditions in T302 applies, turning spaces shall not be required.

> **Advisory T311.2 Turning Space.** Ground surfaces in outdoor areas that are level (less than 3% slope in any direction to allow drainage) and where the distances traveled are less than 50 feet (e.g., around a picnic table) should be at least moderately firm and moderately stable (see Table A in section T303.3 and for more information related to test methods for surface firmness and stability).

T311.3 Unrestricted Viewing Opportunities. Each location providing viewing opportunities for distinct points of interest shall provide at least one unrestricted viewing opportunity for each distinct point of

interest that accommodates eye levels between 32 inches (815 mm) minimum and 51 inches (1295 mm) maximum.

EXCEPTION: Where unrestricted viewing opportunities cannot be provided because any of the conditions in T302 applies, unrestricted viewing opportunities shall not be required.

Advisory T311.3 Unrestricted Viewing Opportunities. Overlooks and viewing areas are specifically designed and constructed to provide an observation of a vista or to a specific point of interest, such as the view to a mountain range or down into a valley or to a waterfall or geologic formation. Each location that provides a viewing opportunity to one or more distinct points of interest must have at least one unrestricted viewing area for each viewing opportunity. Safety barriers, guardrails, and walls used to protect the visitor from an edge or drop off, may not restrict this viewing opportunity. Designs including see-through panels in walls, screened openings or elevated platforms away from the guarded edge will provide an individual seated in a wheelchair or other mobility device with the same view.

T312 Telescopes and Periscopes

T312.1 General. Telescopes and periscopes shall comply with T312.

T312.2 Clear Space. A clear space complying with T403 shall be provided at telescopes and periscopes. Clear spaces shall have a firm and stable surface, and shall have a 1:50 maximum slope in all directions.

EXCEPTION: Where required for proper drainage, slopes not exceeding 1:33 maximum shall be permitted.

Advisory T312.2 Clear Space. Ground surfaces in outdoor areas that are level (less than 3% slope in any direction to allow drainage) and where the distances traveled are less than 50 feet (e.g., around a picnic table) should be at least moderately firm and moderately stable (see Table A in section T303.3 and for more information related to test methods for surface firmness and stability).

T312.3 Operable Parts. Operable parts shall comply with T407.

T312.4 Eye Piece. The eye piece shall be usable from the seated position for viewing each point of interest.

Advisory T312.4 Eye Piece. Telescopes and periscopes need to be designed for people of various heights, including children, people seated and those standing. Several options are available at locations where there is only one telescope or periscope, such as providing an adjustable scope, an adjustable seat, or a single base with two viewing scopes located at different heights. Use of a swing away seat or a small step or ring platform attached to the mounting post of the instrument would be useful for persons of short stature or children.

T313 Fixed Benches

T313.1 General. Fixed benches shall comply with T313.

T313.2 Clear Space. At least one clear space complying with T306.4 and T403 shall be provided at one end of the bench and the space shall not overlap the clear space required for other elements. The clear space shall be positioned to allow wheelchair users to be seated shoulder-to-shoulder with an individual seated on the bench.

T313.3 Height. The top of the seat surface shall be 17 inches (430 mm) minimum and 19 inches (485 mm) maximum above the ground or floor space.

T313.4 Back Support. Back support shall be provided the full length of the bench.

T313.5 Armrest. Where required by T213.2, at least one armrest shall be provided on the bench and shall comply with T411.8.

T314 Utility Sinks

T314.1 General. Utility sinks shall comply with T314.

T314.2 Clear Space. Clear space complying with T403 shall be provided at utility sinks. The clear space shall be positioned for a parallel approach. Clear spaces shall have a firm and stable surface, and shall have a 1:50 maximum slope in all directions.

EXCEPTION: Where required for proper drainage, slopes not exceeding 1:33 maximum shall be permitted.

T314.3 Height. The counter or rim shall be 34 inches (865 mm) maximum above the ground or floor surface.

T314.4 Depth. The bottom of the bowl shall be 15 inches (380 mm) minimum above the ground or floor surface.

T314.5 Operable Parts. Operable parts shall comply with T407.

T315 Mobility Device Storage Facilities

T315.1 General. Mobility device storage facilities shall comply with T315.

T315.2 Clear Space. Clear space complying with T306.4 and T403 shall be provided at storage facilities.

T315.3 Mobility Device Storage. Storage facilities designed for mobility devices shall be 38 inches (965 mm) high minimum, 28 inches (710 mm) wide minimum and 40 inches (1015 mm) deep minimum.

T315.4 Operable Parts. Operable parts shall comply with T407.

T316 Pit Toilets

T316.1 General. Pit toilets shall comply with T316.

T316.2 Clear Space. Clear space complying with T306.4 and T409 shall be provided at pit toilets.

EXCEPTIONS: 1. Where clear space complying with T409 cannot be provided because any of the conditions in T302 applies, the clear space shall be permitted to be reduced to 48 inches (1220 mm) by 48 inches (1220 mm) minimum.
2. Where a clear space 48 inches (1220 mm) by 48 inches (1220 mm) minimum cannot be provided because of any of the conditions in T302 applies, a clear space shall not be required.

T316.3 Height. The seat height of pit toilets shall comply with T409.4.

T316.4 Grab Bars. Where the pit toilet is provided with walls, grab bars complying with T411 shall be provided.

T317 Utilities

T317.1 General. Utilities shall comply with T317.

T317.2 Clear Space. A 60 inches (1525 mm) minimum by 60 inches (1525 mm) minimum clear space shall be provided at water spouts. A clear space complying with T403 shall be provided at all other utilities. Clear spaces shall have a firm and stable surface, and shall have a 1:50 maximum slope in all directions.
EXCEPTION: Where required for proper drainage, slopes not exceeding 1:33 maximum shall be permitted.

T317.3 Water Spouts. Water spouts shall be located 28 inches (710 mm) minimum to 36 inches (915 mm) maximum above the ground or floor surface and shall be centered in the clear space required by T317.2.

T317.4 Operable Parts. Operable parts shall comply withT407.
EXCEPTIONS: 1. Sewage hookups shall not be required to comply with T407.
2. Hand pumps shall not be required to comply with T407.3.

T318 Camping Facilities

T318.1 General. Camping facilities shall comply with T318.

T318.2 Camping Space Parking. Camping space parking shall comply with T318.2.

T318.2.1 Recreational Camping Vehicle and Trailer Spaces. Recreational camping vehicle and trailer parking spaces shall be 20 feet (6100 mm) wide minimum.
EXCEPTION: Where two recreational camping vehicle or trailer spaces are required by T218.2, one space shall be permitted to be 16 feet (4880 mm) wide minimum.

T318.2.2 Tent Camping Spaces and Camp Shelter Spaces. Where parking is provided within the tent camping spaces or camp shelter spaces, the parking space shall be 16 feet (4880 mm) wide minimum.

T318.2.3 General Use Parking Areas. Recreational camping vehicle and trailer parking spaces in general use parking areas shall be 12 feet (3660mm) wide minimum, and shall have an adjacent

access aisle 8 feet (2440 mm) wide minimum extending the full length of the parking space. The surface of the parking space and access aisle shall be firm and stable.

T318.2.4 Slope. Parking spaces shall have a 1:50 maximum slope in all directions.
EXCEPTION: Where required for proper drainage, slopes not exceeding 1:33 maximum shall be permitted.

T318.3 Tent Pads and Tent Platforms. Tent pads and tent platforms shall comply with T318.3.

T318.3.1 Clear Space. A 48 inches (1220 mm) wide minimum clear space shall be provided around the tent pad or tent platform.
EXCEPTION: Where a 48 inches (1220 mm) minimum wide clear space cannot be provided because any of the conditions in T302 applies, the space shall be permitted to be reduced by the minimum necessary but shall not be less than 36 inches (915 mm) wide minimum.

T318.3.2 Surface. The surface of tent pads and tent platforms, and the clear space required by T318.3.1 shall be firm and stable. Tent pad surfaces shall allow use of tent stakes and other securement devices.
EXCEPTION: Where a firm and stable tent pad surface and clear space cannot be provided because any of the conditions in T302 applies, the surface shall not be required to comply with T318.3.2.

T318.3.3 Slope. Tent pads and tent platforms, and the clear space required by T318.3.1 shall have a 1:50 maximum slope in all directions.
EXCEPTION: Where required for proper drainage, slopes not exceeding 1:33 maximum shall be permitted.

T318.3.4 Edge Protection. Curbs, walls, railing, or projecting surfaces that prevent people from slipping off the tent platform shall be provided. Curbs shall be 3 inches (75 mm) high minimum.

T318.3.5 Connection. The surface of the tent platform shall be accessed by either a ramp, by transfer, or directly from the adjacent ground surface.

T319 Warming Huts

T319.1 General. Warming huts shall provide a turning space complying with T402. Where doors are provided, they shall comply with T408.

T320 Outdoor Rinsing Showers

T320.1 General. Outdoor rinsing showers shall comply with T320.

T320.2 Clear Space. A clear space of 60 inches (1525 mm) diameter minimum shall be provided at outdoor rinsing showers and shall be located so that the water from the shower head is directed toward the center of the clear space. The clear space shall have a firm and stable surface, and shall have a 1:50 maximum slope in all directions.

EXCEPTION: Where required for proper drainage, slopes not exceeding 1:33 maximum shall be permitted.

T320.3 Grab Bars. A grab bar complying with T320.3.1, T320.3.2, or T320.3.3 shall be provided at outdoor rinsing showers. The grab bar shall also comply with T411.

T320.3.1 Vertical Grab Bar. Where the shower head is mounted on a post, a vertical grab bar shall be provided under the shower head and shall start 33 inches (840 mm) maximum above the floor and extend to within at least 3 inches (75 mm) of the shower head.

T320.3.2 Circular Grab Bar. Where the shower head is mounted on a post, a grab bar that surrounds the usable part of the post shall be provided. The grab bar shall be provided 33 inches (840 mm) minimum to 36 inches (915 mm) maximum above the floor.

T320.3.3 Horizontal Grab Bar. A horizontal grab bar extending 18 inches (455 mm) minimum in both directions from the center line of the shower head shall be provided under the shower head. The grab bar shall be provided 33 inches (840 mm) minimum to 36 inches (915 mm) maximum above the floor.

T320.4 Controls. Controls shall comply with T407. If self-closing controls are used, the controls shall remain open for at least 10 seconds.

T320.5 Low Shower Spray Head. A fixed shower spray head shall be provided and shall be located 48 inches (1220 mm) minimum to 54 inches (1370 mm) maximum above the ground or floor.
EXCEPTION: A hand held shower spray unit complying with T410 shall be permitted.

T320.6 High Shower Spray Head. A fixed shower spray head shall be provided and shall be located 72 inches (1830 mm) minimum above the ground or floor.
EXCEPTION: A hand held shower spray unit complying with T410 shall be permitted.

T321 Signs

T321.1 General. Trail signs shall comply with T321.2 and camping space signs shall comply with T321.3.

T321.2 Trail Signs. Signs identifying trails and trail segments complying with T303 shall be placed at the trail head and all designated access points. The signs shall display a symbol designating that the trail or trail segment is accessible, and shall include the total distance of the accessible trail or trail segment and the location of the first point where exceptions from the technical provisions in T303 apply.

Advisory T321.2 Trail Signs. Accessible trails must be identified by a sign. While no specific sign was decided on, possible designs for consideration follow.

Given the wide variability in the actual characteristics that may be encountered on a trail, it is strongly recommended that objective information about the actual trail conditions be provided for all trails, whether or not they are accessible. Objective information about actual trail conditions for all trails will assist users in determining whether the trail meets their own abilities. The variability of conditions on these trails can be very dramatic, and may range from relatively minor variations from the technical provisions to extreme conditions. Objective information about the trail conditions will enhance the accessibility, safety, and satisfaction of all trail users, both with and without disabilities.

Where more extensive trail information is provided (e.g., a top view map of trail and facilities), a profile of the trail grade and surface should be included, identifying the location of the accessible trail segments and any parts of the trail that are not accessible. Recommendations for measurement techniques for the individual trail variables are included at the end of this section. For trails that comply with the technical provisions in T303, it is recommended that the following additional information be provided:

Trail symbol
Running slope (average and maximum)
Cross slope (maximum)
Clear tread width (minimum)
Surface type
Trail length
Trail elevation (at trailhead); and
Maximum elevation attained.

Advisory T321.2 Trail Signs. For trails that do not comply with the technical provisions in T303, it is recommended that the following information be provided:

Running slope (average and maximum)
Cross slope (average and maximum)
Clear tread width (minimum and average)
Surface type, firmness, and stability
Tread obstacles (magnitude and frequency)
Trail length
Trail elevation (at trailhead)
Total elevation change; and
Maximum and lowest elevation attained.

The following definitions describe how measurements should be made in order to provide the recommended information for trail signage:

- Surface Information

The type of material that makes up the majority of the surface should be described (e.g., packed soil, asphalt, crushed rock, or wood). The firmness of the surface should be described as "very firm" or "moderately firm". The stability of the surface should be described as "very stable" or "moderately stable" (see Table A in Advisory T303.3 Surfaces for information on measuring firmness and stability).

- Clear Tread Width (minimum and average)

Average clear tread width represents the typical clear tread width over the entire length of the trail. Average clear tread width should be determined by averaging the individual clear trail widths for each sequential segment of the trail from the trail head to the destination (see T303.4 for additional information on measuring clear tread width).

- Tread Obstacles

See T303.6 for information on measuring tread obstacles.

- Slope

Average running slope represents the typical steepness of the entire length of the trail. The running slope should be measured for each sequential trail segment, from the trail head to the destination. It is recommended that trail segments be identified in 100 foot (30.5 m) maximum lengths. Calculation of the average running slope should be based on the running slope for each trail segment taking into consideration the interval over which each measurement was made.

Advisory T321.2 Trail Signs. Maximum running slope represents the section(s) of the trail with the steepest grade. Maximum running slope should be determined over the best (i.e., most level) path of travel for that segment of the trail. For example, a 10 foot wide trail may have a steep rut on one edge of the trail because that side of the trail has eroded significantly. The rut is 3 feet wide and continues along the trail for 50 feet. The running slope when one walks down into the rut is 20 percent. The remaining 7 feet on the right-hand side of the trail has a running slope of 10 percent. The maximum running slope would be measured as 10 percent.

- Cross Slope

Average cross slope represents the angle of the tread over the entire length of the trail. The average cross slope should be determined by taking the average of the cross slope measurements taken at intervals of 100 feet (30.5 m) or less from the trailhead to the destination, along the easiest or most level path of travel along the trail. Trail cross slope should be measured over a 24 inch (610 mm) width. Calculation of the average cross slope is the average value of all cross slope measurements taking into consideration the length of the interval between each measurement.

Maximum cross slope should be determined over the best (i.e., most level) path of travel for that segment of the trail. For example, a 6 foot wide trail may have a steep side slope on one edge of the trail. This section has an 8 percent cross slope that extends 2 feet from the edge of the trail tread. The remaining 4 feet on the other side of the trail has a cross slope of 3 percent. The maximum cross slope would be measured as 3 percent.

- Trail Length

The distance from the trailhead to the destination or end of the trail should be measured in linear feet along the center line of the trail.

- Trail Elevation

The elevation should be recorded at the trail head, at the highest point on the trail and at the lowest point on the trail. Total elevation change is the sum of all elevation gains and losses, indicating the total amount of elevation which must be negotiated.

Advisory T321.2 Trail Signs. The following are examples of generic signage formats that include the information recommended in this advisory note.

Happy Falls Trail

Length 2.3 mi **Trailhead Elevation 1100 ft**

Users/Activities

This is one of the most sceinic walks in our park. As you work your way up to the falls, you will be amazed at the spectacular views off the sides of the trail. When you reach the lookout point you will need to take a moment to get a few sanp shots with you and your friend infront of this natural canvas. The Falls star 300 ft. above you and cascade down the cliffs.

The Average Grade of the trail is 6%
6% of the trail is greater than 10%
580 ft are greater than 14%

The Average Cross Slope of the trail is 3%
10% of the trail is greater than 6%
72 ft are greater than 12%

The Average Tread Width of the trail is 69 in
The Minimum Tread Width of the trail is 28 in
The Minimum Clearance Width of the trail is 24 in

The trail surface is Decomp. Granite
75 % of the trail is Firm
351 ft of the trail is Soft

Other Hazards

10 in Dropoff

Poisonous Plants

8 in Roots

Trail Profile

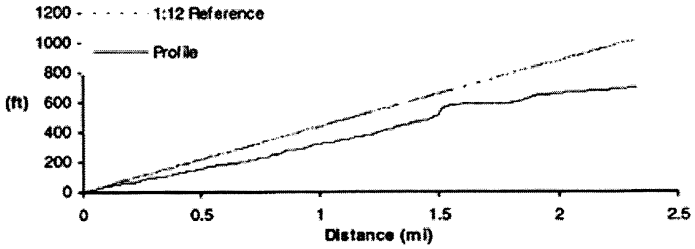

Trailhead Location The trailhead is located off of highway 143, just north of Mono Lake Road. Take highway 143, 7 miles east to Mono Lake Road. Get off on Mono Lake Road north for 2 miles and you'll see the parking lot for the trail on the left side.

Warning: Trail conditions may have changed since this trail was assessed. Temporary obstacles such as fallen trees and land slides were not mapped.

Trail Acccess Information **Abraham Lincoln Birthplace National Historic Site**

This is a sample of trail information that could be distributed at a visitor center or used as trailhead signage.

Advisory T321.2 Trail Signs. This is a sample of full trailhead signage that would be printed in full color and could be placed at the beginning of the trail. It could also be formatted to fit into a fold up pocket guide.

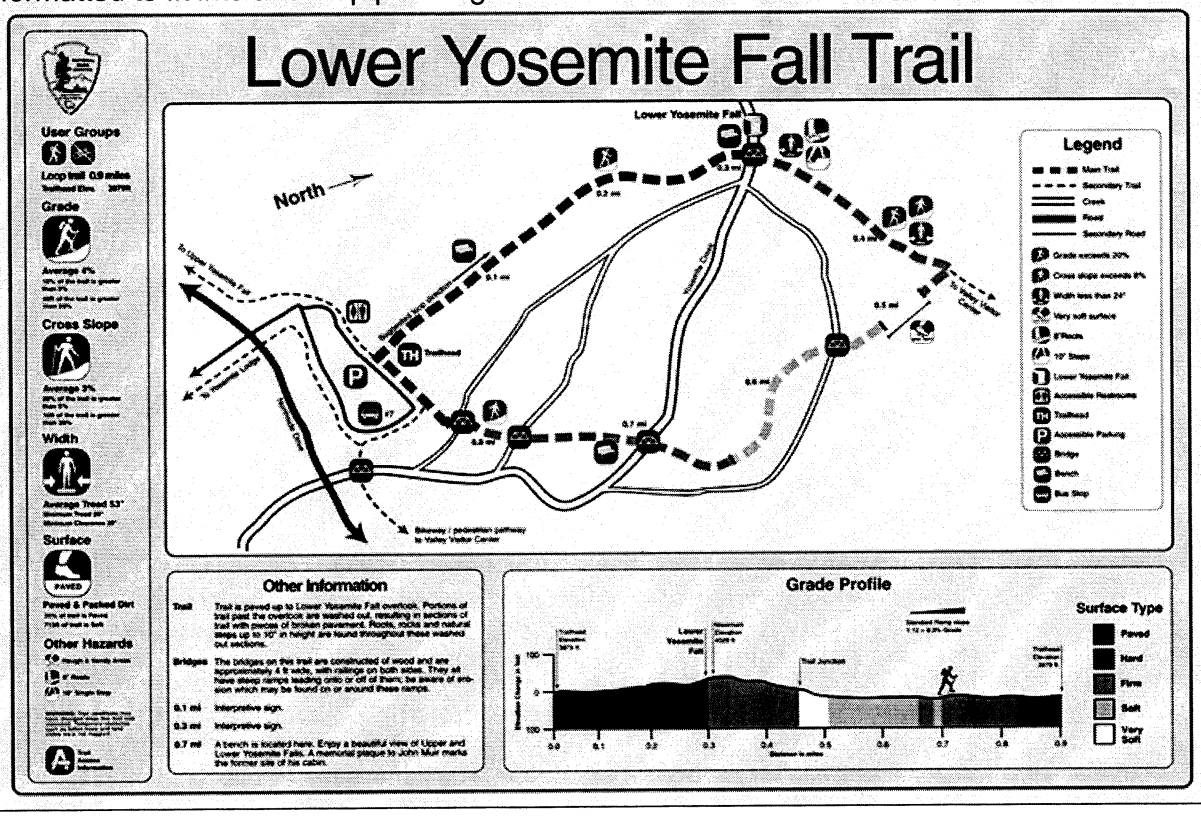

T321.3 Camping Space Signs. Camping spaces complying with T318 shall be identified by the International Symbol of Accessibility complying with T412.

T322 Protruding Objects

T322.1 General. Protruding objects on trails, outdoor recreation access routes, and beach access routes shall comply with T405. Trails shall have 80 inches (2030 mm) high minimum vertical clearance.

EXCEPTION: Where 80 inches (2030 mm) high minimum vertical clearance cannot be provided on trails because any of the conditions in T302 applies, vertical clearance shall be permitted to be less than 80 inches (2030 mm) high minimum where a barrier is provided.

Advisory T322.1 Protruding Objects. When the vertical clearance is less than 80 inches on a trail, a barrier is needed to warn persons who are blind or visually impaired.

CHAPTER T4: SUPPLEMENTARY TECHNICAL PROVISIONS

T401 General

T401.1 Scope. The provisions of Chapter T4 shall apply where required by Chapter T3 or where referenced by a requirement in this document.

T402 Turning Space

T402.1 Size. Turning space shall comply with T402.1.1 or T402.1.2.

T402.1.1 Circular Space. The turning space shall be a space of 60 inches (1525 mm) diameter minimum. The space shall be permitted to include knee and toe clearance complying with T404.2 and T404.3.

T402.1.2 T-Shaped Space. The turning space shall be a T-shaped space within a 60 inch (1525 mm) square minimum with arms and base 36 inches (915 mm) wide minimum. Each arm of the T shall be clear of obstructions 12 inches (305 mm) minimum in each direction and the base shall be clear of obstructions 24 inches (610 mm) minimum. The space shall be permitted to include knee and toe clearance complying with T404.2 and T404.3 only at the end of either the base or one arm.

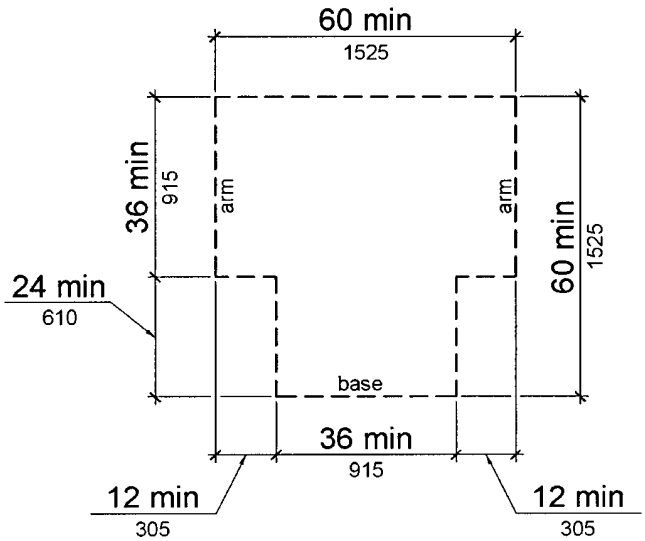

Figure T402.1.2
T-Shaped Turning Space

T402.2 Door Swing. Doors shall be permitted to swing into turning spaces.

T403 Clear Floor or Ground Space

T403.1 Size. The clear floor or ground space shall be 30 inches (760 mm) minimum by 48 inches (1220 mm) minimum.

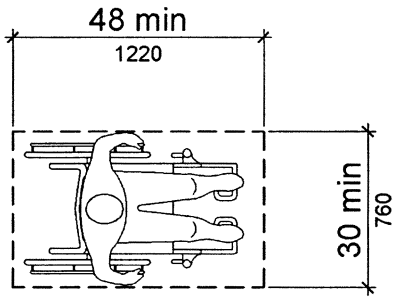

Figure T403.1
Clear Floor or Ground Space

T404 Knee and Toe Clearance

T404.1 General. Where space beneath an element is included as part of clear floor or ground space or turning space, the space shall comply with T404. Additional space shall not be prohibited beneath an element but shall not be considered as part of the clear floor or ground space or turning space.

> **Advisory T404.1 General.** Clearances are measured in relation to the usable clear floor space, not necessarily to the vertical support for an element. When determining clearance under an object for required turning or turning space, care should be taken to ensure the space is clear of any obstructions.

T404.2 Toe Clearance.

T404.2.1 General. Space under an element between the finish floor or ground and 9 inches (230 mm) above the finish floor or ground shall be considered toe clearance and shall comply with T404.2.

T404.2.2 Maximum Depth. Toe clearance shall extend 25 inches (635 mm) maximum under an element.

T404.2.3 Minimum Required Depth. Where toe clearance is required at an element as part of a clear floor space, the toe clearance shall extend 17 inches (430 mm) minimum under the element.

T404.2.4 Additional Clearance. Space extending greater than 6 inches (150 mm) beyond the available knee clearance at 9 inches (230 mm) above the finish floor or ground shall not be considered toe clearance.

T404.2.5 Width. Toe clearance shall be 30 inches (760 mm) wide minimum.

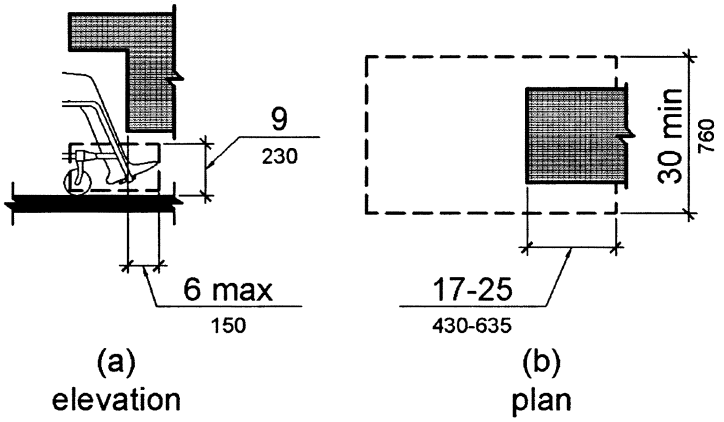

Figure T404.2
Toe Clearance

T404.3 Knee Clearance.

T404.3.1 General. Space under an element between 9 inches (230 mm) and 27 inches (685 mm) above the finish floor or ground shall be considered knee clearance and shall comply with T404.3.

T404.3.2 Maximum Depth. Knee clearance shall extend 25 inches (635 mm) maximum under an element at 9 inches (230 mm) above the finish floor or ground.

T404.3.3 Minimum Required Depth. Where knee clearance is required under an element as part of a clear floor space, the knee clearance shall be 11 inches (280 mm) deep minimum at 9 inches (230 mm) above the finish floor or ground, and 8 inches (205 mm) deep minimum at 27 inches (685 mm) above the finish floor or ground.

T404.3.4 Clearance Reduction. Between 9 inches (230 mm) and 27 inches (685 mm) above the finish floor or ground, the knee clearance shall be permitted to reduce at a rate of 1 inch (25 mm) in depth for each 6 inches (150 mm) in height.

T404.3.5 Width. Knee clearance shall be 30 inches (760 mm) wide minimum.

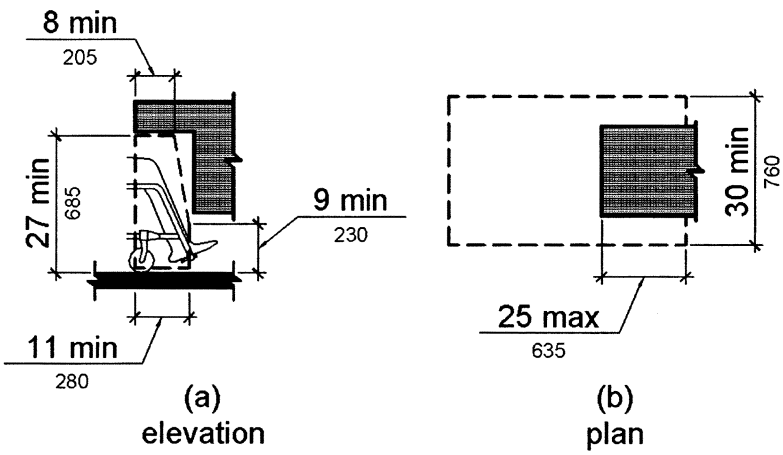

Figure T404.3
Knee Clearance

T405 Protruding Objects

T405.1 General. Protruding objects shall comply with T405.

T405.2 Protrusion Limits. Objects with leading edges more than 27 inches (685 mm) and not more than 80 inches (2030 mm) above the finish floor or ground shall protrude 4 inches (100 mm) maximum horizontally into the circulation path.

EXCEPTION: Handrails shall be permitted to protrude 4 ½ inches (115 mm) maximum.

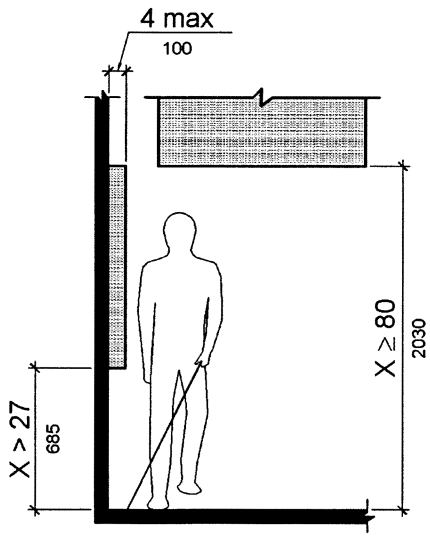

Figure T405.2
Limits of Protruding Objects

T405.3 Post-Mounted Objects. Free-standing objects mounted on posts or pylons shall overhang circulation paths 12 inches (305 mm) maximum when located 27 inches (685 mm) minimum and 80 inches (2030 mm) maximum above the finish floor or ground. Where a sign or other obstruction is mounted between posts or pylons and the clear distance between the posts or pylons is greater than 12 inches (305 mm), the lowest edge of such sign or obstruction shall be 27 inches (685 mm) maximum or 80 inches (2030 mm) minimum above the finish floor or ground.

EXCEPTION: The sloping portions of handrails serving stairs and ramps shall not be required to comply with T405.3.

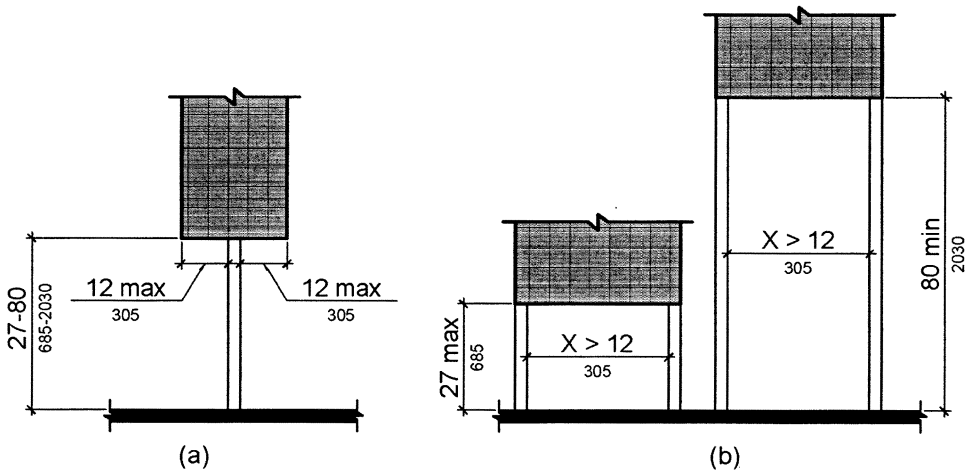

Figure T405.3
Post-Mounted Protruding Objects

T405.4 Required Clear Width. Protruding objects shall not reduce the clear width required for accessible routes.

T406 Reach Ranges

T406.1 General. Reach ranges shall comply with T406.

Advisory T406.1 General. The following table provides guidance on reach ranges for children according to age where building elements such as coat hooks, lockers, or operable parts are designed for use primarily by children. These dimensions apply to either forward or side reaches. Accessible elements and operable parts designed for adult use or children over age 12 can be located outside these ranges but must be within the adult reach ranges required by T406.

Children's Reach Ranges			
Forward or Side Reach	**Ages 3 and 4**	**Ages 5 through 8**	**Ages 9 through 12**
High (maximum)	36 in (915 mm)	40 in (1015 mm)	44 in (1120 mm)
Low (minimum)	20 in (510 mm)	18 in (455 mm)	16 in (405 mm)

T406.2 Forward Reach.

T406.2.1 Unobstructed. Where a forward reach is unobstructed, the high forward reach shall be 48 inches (1220 mm) maximum and the low forward reach shall be 15 inches (380 mm) minimum above the finish floor or ground.

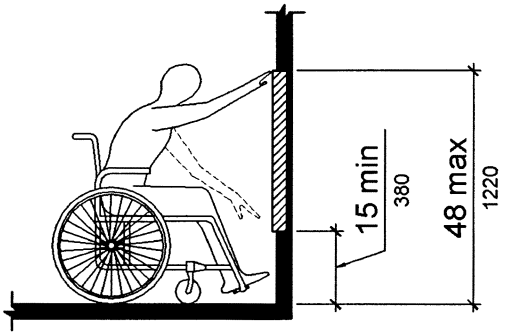

Figure T406.2.1
Unobstructed Forward Reach

T406.2.2 Obstructed High Reach. Where a high forward reach is over an obstruction, the clear floor space shall extend beneath the element for a distance not less than the required reach depth over the obstruction. The high forward reach shall be 48 inches (1220 mm) maximum where the reach depth is 20 inches (510 mm) maximum. Where the reach depth exceeds 20 inches (510 mm), the high forward reach shall be 44 inches (1120 mm) maximum and the reach depth shall be 25 inches (635 mm) maximum.

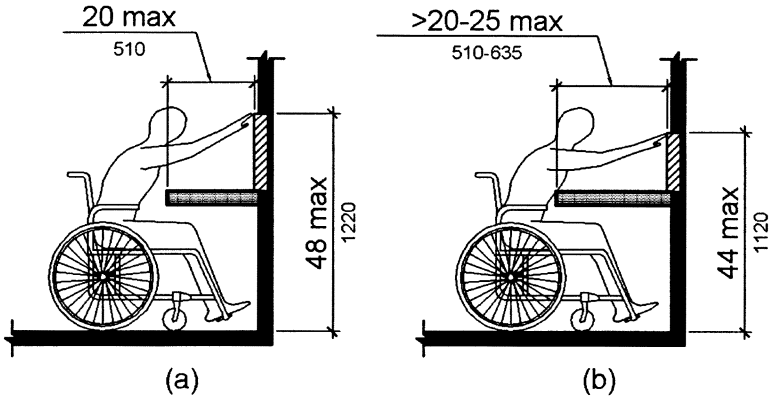

Figure T406.2.2
Obstructed High Forward Reach

T406.3 Side Reach.

T406.3.1 Unobstructed. Where a clear floor or ground space allows a parallel approach to an element and the side reach is unobstructed, the high side reach shall be 48 inches (1220 mm)

maximum and the low side reach shall be 15 inches (380 mm) minimum above the finish floor or ground.

EXCEPTION: An obstruction shall be permitted between the clear floor or ground space and the element where the depth of the obstruction is 10 inches (255 mm) maximum.

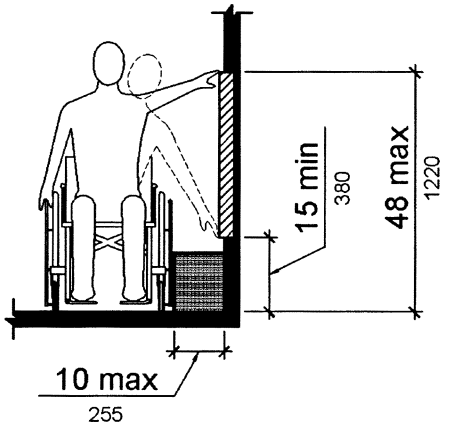

Figure T406.3.1
Unobstructed Side Reach

T406.3.2 Obstructed High Reach. Where a clear floor or ground space allows a parallel approach to an element and the high side reach is over an obstruction, the height of the obstruction shall be 34 inches (865 mm) maximum and the depth of the obstruction shall be 24 inches (610 mm) maximum. The high side reach shall be 48 inches (1220 mm) maximum for a reach depth of 10 inches (255 mm) maximum. Where the reach depth exceeds 10 inches (255 mm), the high side reach shall be 46 inches (1170 mm) maximum for a reach depth of 24 inches (610 mm) maximum.

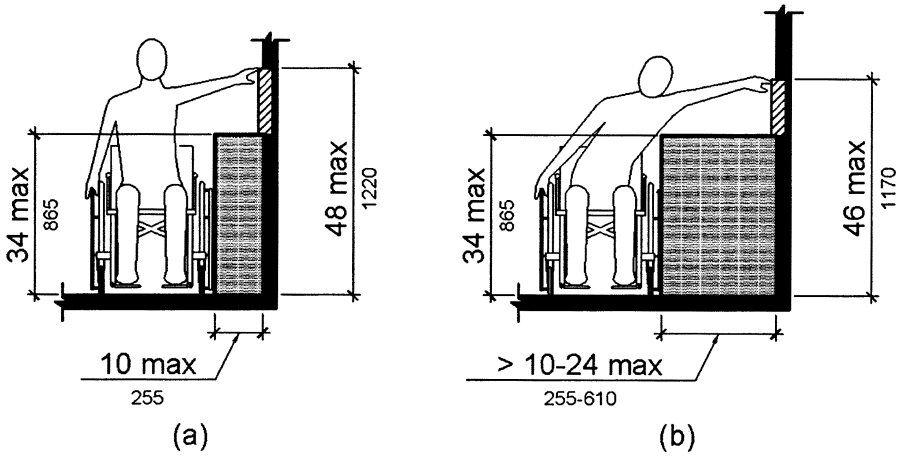

Figure T406.3.2
Obstructed High Side Reach

T407 Operable Parts

T407.1 General. Operable parts shall comply with T407.

T407.2 Height. Operable parts shall be placed within one or more of the reach ranges specified in T406.

T407.3 Operation. Operable parts shall be operable with one hand and shall not require tight grasping, pinching, or twisting of the wrist. The force required to activate operable parts shall be 5 pounds (22.2 N) maximum.

T408 Doors, Doorways, and Gate

T408.1 General. Doors, doorways, and gates shall comply with T408.

T408.2 Manual Doors, Doorways, and Manual Gates. Manual doors and doorways and manual gates intended for user passage shall comply with T408.2.

T408.2.1 Revolving Doors, Gates, and Turnstiles. Revolving doors, revolving gates, and turnstiles shall not be part of an accessible route.

T408.2.2 Double-Leaf Doors and Gates. At least one of the active leaves of doorways with two leaves shall comply with T408.2.3 and T408.2.4.

T408.2.3 Clear Width. Door openings shall provide a clear width of 32 inches (815 mm) minimum. Clear openings of doorways with swinging doors shall be measured between the face of the door and the stop, with the door open 90 degrees. Openings more than 24 inches (610 mm) deep shall provide a clear opening of 36 inches (915 mm) minimum. There shall be no projections into the required clear opening width lower than 34 inches (865 mm) above the finish floor or ground. Projections into the clear opening width between 34 inches (865 mm) and 80 inches (2030 mm) above the finish floor or ground shall not exceed 4 inches (100 mm).

EXCEPTIONS: 1. In alterations, a projection of 5/8 inch (16 mm) maximum into the required clear width shall be permitted for the latch side stop.

2. Door closers and door stops shall be permitted to be 78 inches (1980 mm) minimum above the finish floor or ground.

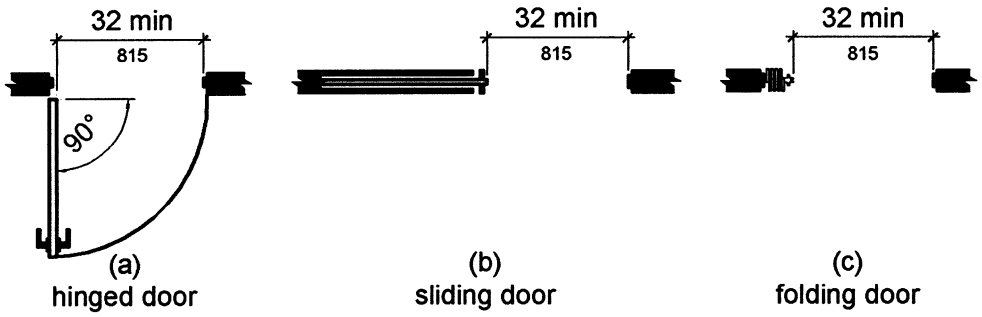

Figure T408.2.3
Clear Width of Doorways

T408.2.4 Maneuvering Clearances. Minimum maneuvering clearances at doors and gates shall comply with T408.2.4. Maneuvering clearances shall extend the full width of the doorway and the required latch side or hinge side clearance.

T408.2.4.1 Swinging Doors and Gates. Swinging doors and gates shall have maneuvering clearances complying with Table T408.2.4.1.

Table T408.2.4.1 Maneuvering Clearances at Manual Swinging Doors and Gates

Type of Use		Minimum Maneuvering Clearance	
Approach Direction	**Door or Gate Side**	**Perpendicular to Doorway**	**Parallel to Doorway (beyond latch side unless noted)**
From front	Pull	60 inches (1525 mm)	18 inches (455 mm)
From front	Push	48 inches (1220 mm)	0 inches (0 mm)[1]
From hinge side	Pull	60 inches (1525 mm)	36 inches (915 mm)
From hinge side	Pull	54 inches (1370 mm)	42 inches (1065 mm)
From hinge side	Push	42 inches (1065 mm)[2]	22 inches (560 mm)[3]
From latch side	Pull	48 inches (1220 mm)[4]	24 inches (610 mm)
From latch side	Push	42 inches (1065 mm)[4]	24 inches (610 mm)

1. Add 12 inches (305 mm) if closer and latch are provided.
2. Add 6 inches (150 mm) if closer and latch are provided.
3. Beyond hinge side.
4. Add 6 inches (150 mm) if closer is provided.

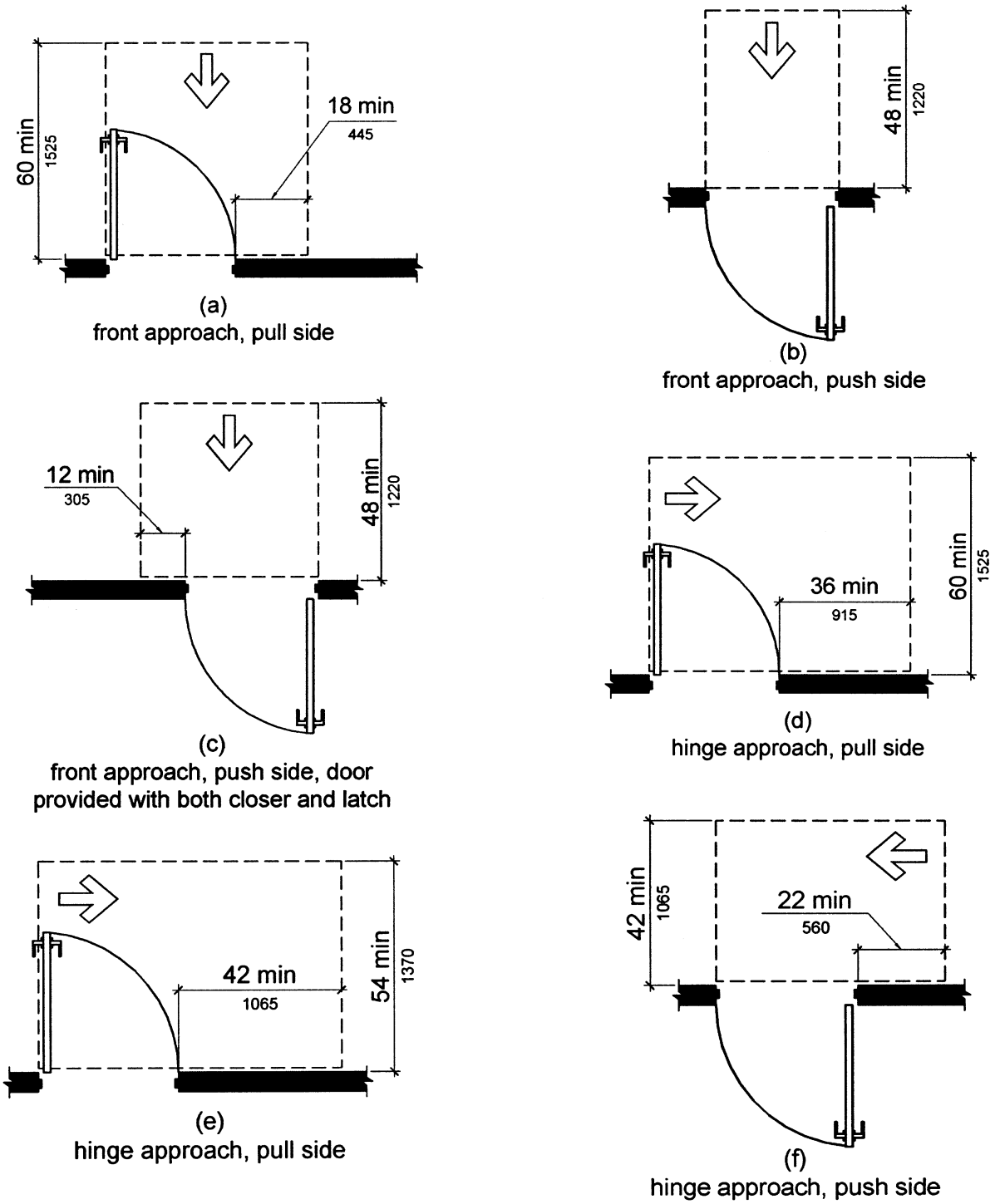

Figure T408.2.4.1
Maneuvering Clearances at Manual Swinging Doors and Gates

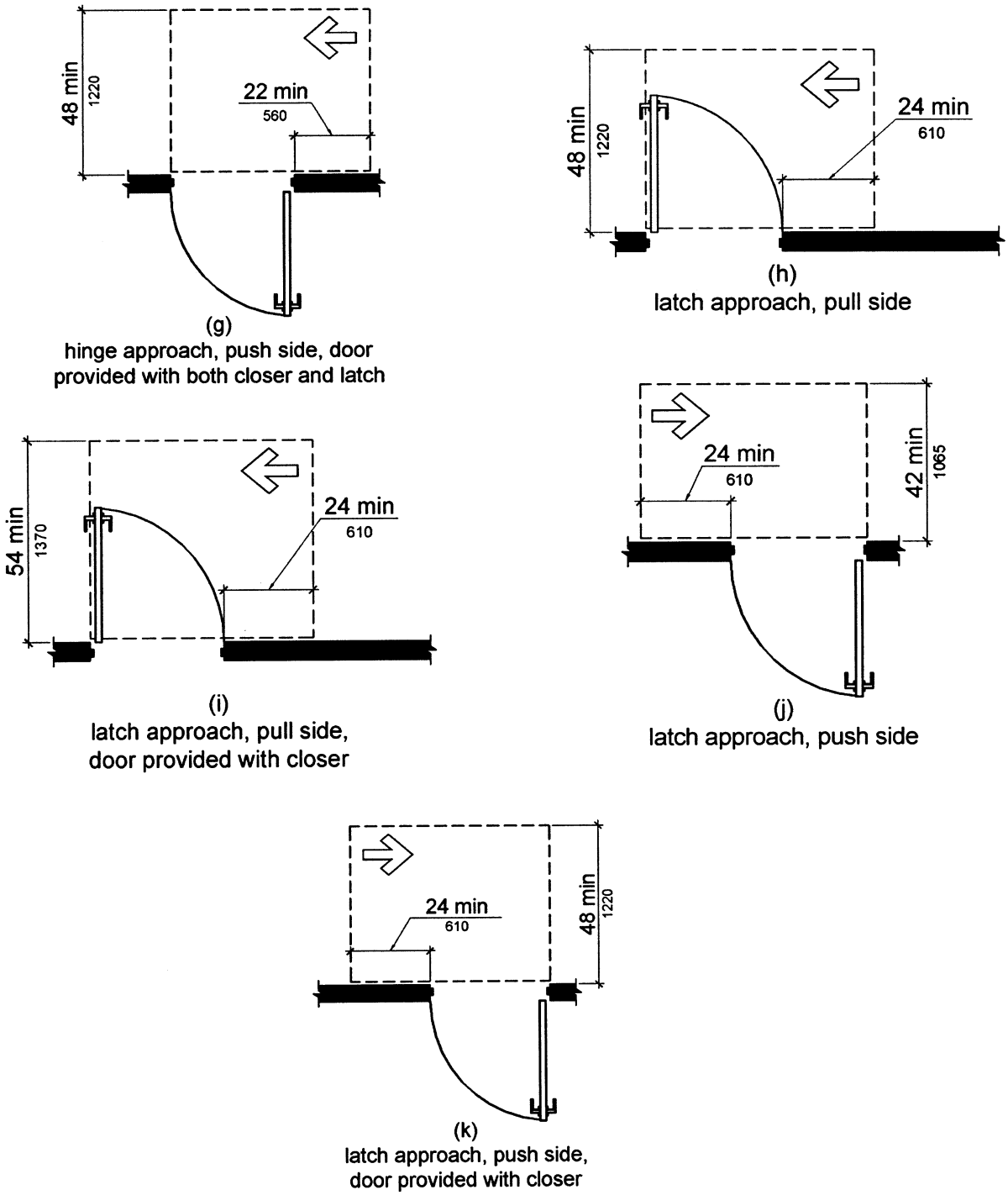

Figure T408.2.4.1
Maneuvering Clearances at Manual Swinging Doors and Gates

T408.2.4.2 Doorways without Doors or Gates, Sliding Doors, and Folding Doors. Doorways less than 36 inches (915 mm) wide without doors or gates, sliding doors, or folding doors shall have maneuvering clearances complying with Table T408.2.4.2.

Table T408.2.4.2 Maneuvering Clearances at Doorways without Doors or Gates, Manual Sliding Doors, and Manual Folding Doors

	Minimum Maneuvering Clearance	
Approach Direction	**Perpendicular to Doorway**	**Parallel to Doorway (beyond stop/latch side unless noted)**
From Front	48 inches (1220 mm)	0 inches (0 mm)
From side[1]	42 inches (1065 mm)	0 inches (0 mm)
From pocket/hinge side	42 inches (1065 mm)	22 inches (560 mm)[2]
From stop/latch side	42 inches (1065 mm)	24 inches (610 mm)

1. Doorway with no door only.
2. Beyond pocket/hinge side.

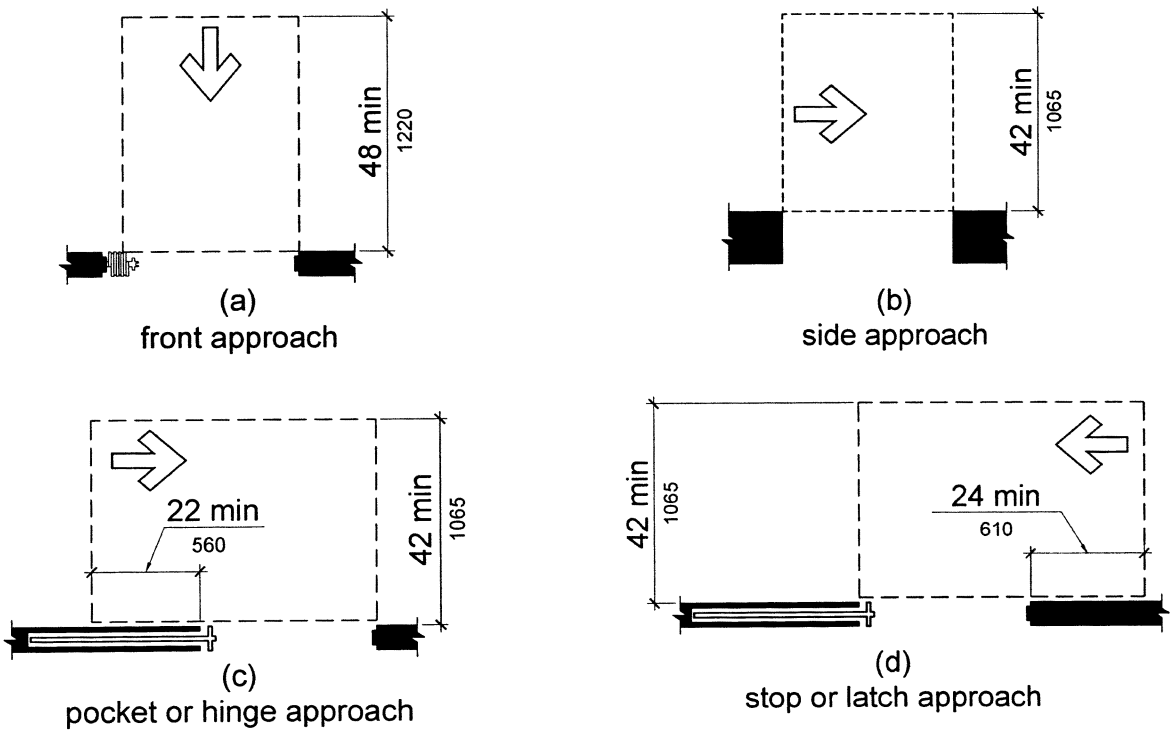

Figure T408.2.4.2
Maneuvering Clearances at Doorways without Doors, Sliding Doors, Gates, and Folding Doors

T408.2.4.3 Recessed Doors and Gates. Maneuvering clearances for forward approach shall be provided when any obstruction within 18 inches (455 mm) of the latch side of a doorway projects more than 8 inches (205 mm) beyond the face of the door, measured perpendicular to the face of the door or gate.

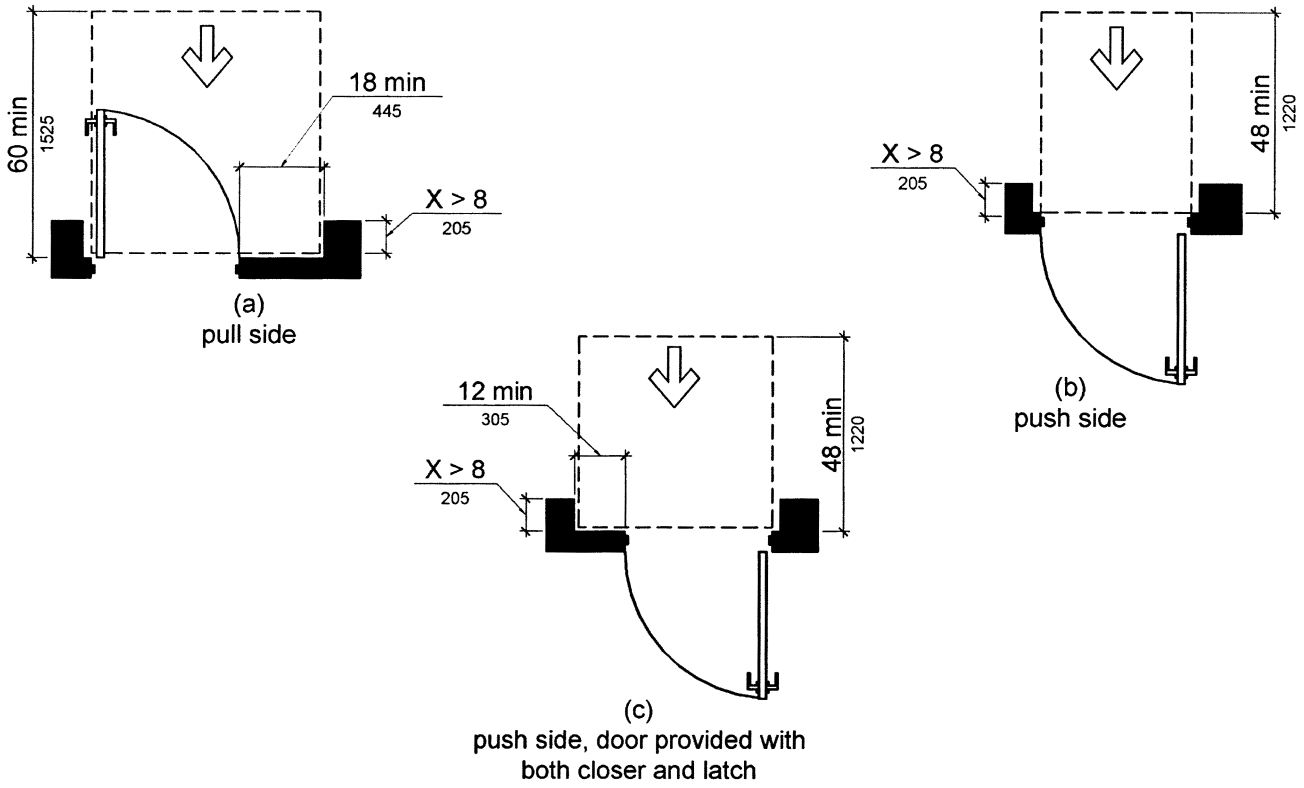

Figure T408.2.4.3
Maneuvering Clearances at Recessed Doors and Gates

T408.2.4.4 Floor or Ground Surface. Floor or ground surface within required maneuvering clearances shall be stable and firm. Changes in level are not permitted.

EXCEPTIONS: 1. Slopes not steeper than 1:48 shall be permitted.

2. Changes in level at thresholds complying with T408.2.5 shall be permitted.

T408.2.5 Thresholds. Thresholds, if provided at doorways, shall be ½ inch (13 mm) high maximum. Raised thresholds and changes in level at doorways shall comply with T402 and T303.

EXCEPTION: Existing or altered thresholds ¾ inch (19 mm) high maximum that have a beveled edge on each side with a slope not steeper than 1:2 shall not be required to comply with T408.2.5.

T408.2.6 Doors in Series and Gates in Series. The distance between two hinged or pivoted doors in series and gates in series shall be 48 inches (1220 mm) minimum plus the width of doors or gates swinging into the space.

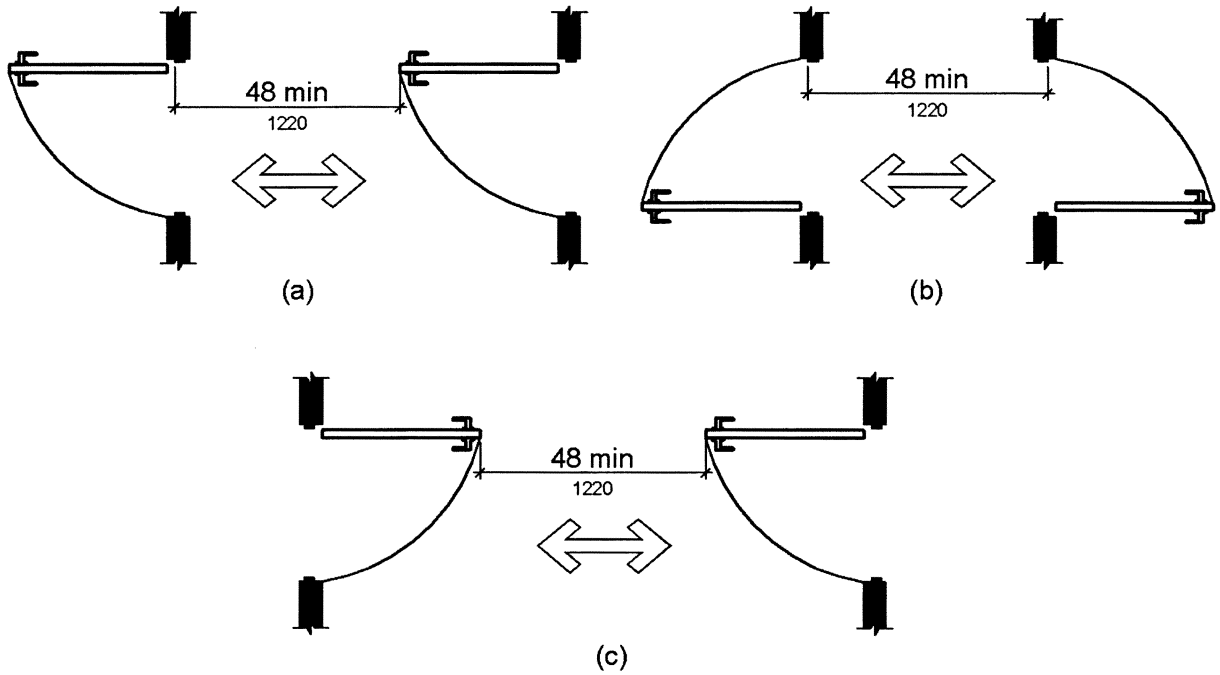

Figure T408.2.6
Doors in Series and Gates in Series

T408.2.7 Door and Gate Hardware. Handles, pulls, latches, locks, and other operable parts on doors and gates shall comply with T407.3. Operable parts of such hardware shall be 34 inches (865 mm) minimum and 48 inches (1220 mm) maximum above the finish floor or ground. Where sliding doors are in the fully open position, operating hardware shall be exposed and usable from both sides.

EXCEPTIONS: 1. Existing locks shall be permitted in any location at existing glazed doors without stiles, existing overhead rolling doors or grilles, and similar existing doors or grilles that are designed with locks that are activated only at the top or bottom rail.

2. Access gates in barrier walls and fences protecting pools, spas, and hot tubs shall be permitted to have operable parts of the release of latch on self-latching devices at 54 inches (1370 mm) maximum above the finish floor or ground provided the self-latching devices are not also self-locking devices and operated by means of a key, electronic opener, or integral combination lock.

Advisory T408.2.7 Door and Gate Hardware. Door hardware that can be operated with a closed fist or a loose grip accommodates the greatest range of users. Hardware that requires simultaneous hand and finger movements require greater dexterity and coordination, and is not recommended.

T408.2.8 Closing Speed. Door and gate closing speed shall comply with T408.2.8.

T408.2.8.1 Door Closers and Gate Closers. Door closers and gate closers shall be adjusted so that from an open position of 90 degrees, the time required to move the door to a position of 12 degrees from the latch is 5 seconds minimum.

T408.2.8.2 Spring Hinges. Door and gate spring hinges shall be adjusted so that from the open position of 70 degrees, the door or gate shall move to the closed position in 1.5 seconds minimum.

T408.2.9 Door and Gate Opening Force. Fire doors shall have a minimum opening force allowable by the appropriate administrative authority. The force for pushing or pulling open a door or gate other than fire doors shall be as follows:

1. Interior hinged doors and gates: 5 pounds (22.2 N) maximum.
2. Sliding or folding doors: 5 pounds (22.2 N) maximum.

These forces do not apply to the force required to retract latch bolts or disengage other devices that hold the door or gate in a closed position.

Advisory T408.2.9 Door and Gate Opening Force. The maximum force pertains to the continuous application of force necessary to fully open a door, not the initial force needed to overcome the inertia of the door. It does not apply to the force required to retract bolts or to disengage other devices used to keep the door in a closed position.

T408.2.10 Door and Gate Surfaces. Swinging door and gate surfaces within 10 inches (255 mm) of the finish floor or ground measured vertically shall have a smooth surface on the push side extending the full width of the door or gate. Parts creating horizontal or vertical joints in these surfaces shall be within 1/16 inch (1.6 mm) of the same plane as the other. Cavities created by added kick plates shall be capped.

EXCEPTIONS: 1. Sliding doors shall not be required to comply with 408.2.10.

2. Tempered glass doors without stiles and having a bottom rail or shoe with the top leading edge tapered at 60 degrees minimum from the horizontal shall not be required to meet the 10 inch (255 mm) bottom smooth surface height requirement.

3. Doors and gates that do not extend to within 10 inches (255 mm) of the finish floor or ground shall not be required to comply with T408.2.10.

4. Existing doors and gates without smooth surfaces within 10 inches (255 mm) of the finish floor or ground shall not be required to provide smooth surfaces complying with T408.2.10 provided that if added kick plates are installed, cavities created by such kick plates are capped.

T408.2.11 Vision Lights. Doors, gates, and side lights adjacent to doors or gates, containing one or more glazing panels that permit viewing through the panels shall have the bottom of at least one glazed panel located 43 inches (1090 mm) maximum above the finish floor.

EXCEPTION: Vision lights with the lowest part more than 66 inches (1675 mm) from the finish floor or ground shall not be required to comply with T408.2.11.

T409 Pit Toilets

T409.1 General. Pit toilets shall comply with T409.2 through T409.6. Where doors are provided, they shall comply with T407.

T409.2 Location. The pit toilet shall be positioned with a wall or partition to the rear and to one side. The centerline of the pit toilet shall be 16 inches (405 mm) minimum to 18 inches (455 mm) maximum from the side wall or partition. Pit toilets shall be arranged for a left-hand or right-hand approach.

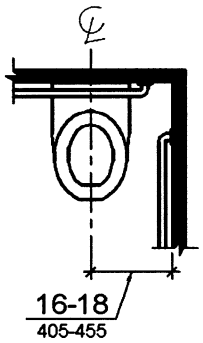

Figure T409.2
Pit Toilet Location

T409.3 Clearance. Clearances around pit toilet and in pit toilet compartments shall comply with T409.3.

T409.3.1 Size. Clearance around a pit toilet shall be 60 inches (1525 mm) minimum measured perpendicular from the side wall and 56 inches (1420 mm) minimum measured perpendicular from the rear wall.

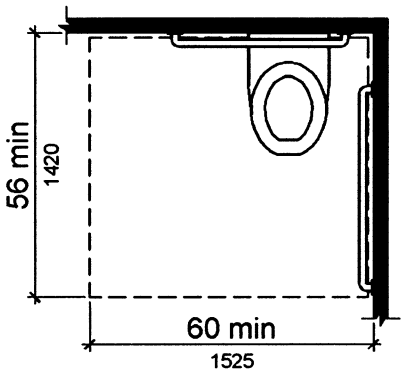

Figure T409.3.1
Size of Clearance at Pit Toilets

T409.3.2 Overlap. The required clearance around the pit toilet shall be permitted to overlap the pit toilet, associated grab bars, dispensers, sanitary napkin disposal units, coat hooks, shelves, outdoor recreation access routes, clear floor space and clearances required at other fixtures, and the turning space. No other fixtures or obstructions shall be located within the required pit toilet clearance.

Advisory T409.3.2 Overlap. When the door to the pit toilet compartment is placed directly in front of the pit toilet, the pit toilet cannot overlap the required maneuvering clearance for the door inside the room.

T409.4 Seats. The seat height of a pit toilet above the finish floor shall be 17 inches (430 mm) minimum and 19 inches (485 mm) maximum measured to the top of the seat. Seats shall not be sprung to return to a lifted position.

T409.5 Pit Toilets with Walls - Grab Bars. Where pit toilets are designed with walls, grab bars complying with T409.5 shall be provided. Grab bars shall be provided on the side wall closest to the pit toilet and on the rear wall.

T409.5.1 Side Wall. The side wall grab bar shall be 42 inches (1065 mm) long minimum, located 12 inches (305 mm) maximum from the rear wall and extending 54 inches (1370 mm) minimum from the rear wall.

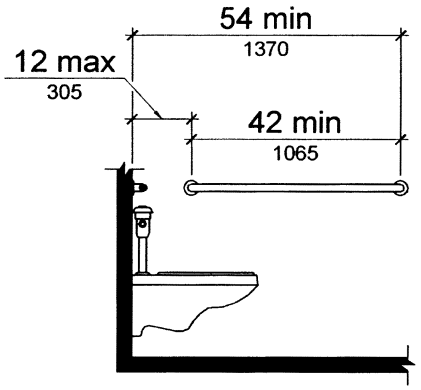

Figure T409.5.1
Side Wall Grab Bar at Pit Toilets

T409.5.2 Rear Wall. The rear wall grab bar shall be 36 inches (915 mm) long minimum and extend from the centerline of the pit toilet 12 inches (305 mm) minimum on one side and 24 inches (610 mm) minimum on the other side.

EXCEPTION: The rear grab bar shall be permitted to be 24 inches (610 mm) long minimum, centered on the pit toilet, where wall space does not permit a length of 36 inches (915 mm) minimum due to the location of a recessed fixture adjacent to the pit toilet.

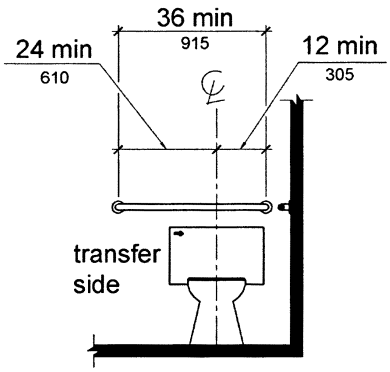

Figure T409.5.2
Rear Wall Grab Bar at Pit Toilets

T410 Shower Spray Unit

T410.1 Shower Spray Unit. A shower spray unit with a hose 59 inches (1500 mm) long minimum that can be used both as a fixed-position shower head and as a hand-held shower shall be provided. The shower spray unit shall have an on/off control with a non-positive shut-off. If an adjustable-height shower head on a vertical bar is used, the bar shall be installed so as not to obstruct the use of grab bars.

> **Advisory T410.1 Shower Spray Unit.** Ensure that hand-held shower spray units are capable of delivering water pressure substantially equivalent to fixed shower heads.

T411 Grab Bar

T411.1 General. Grab bars in pit toilets and outdoor rinsing showers shall comply with T411.

T411.2 Cross Section. Grab bars shall have a cross section complying with T411.2.1 or T411.2.2.

T411.2.1 Circular Cross Section. Grab bars with circular cross sections shall have an outside diameter of 1 ¼ inches (32 mm) minimum and 2 inches (51 mm) maximum.

T411.2.2 Non-Circular Cross Section. Grab bars with non-circular cross sections shall have a cross-section dimension of 2 inches (51 mm) maximum and a perimeter dimension of 4 inches (100 mm) minimum and 4.8 inches (120 mm) maximum.

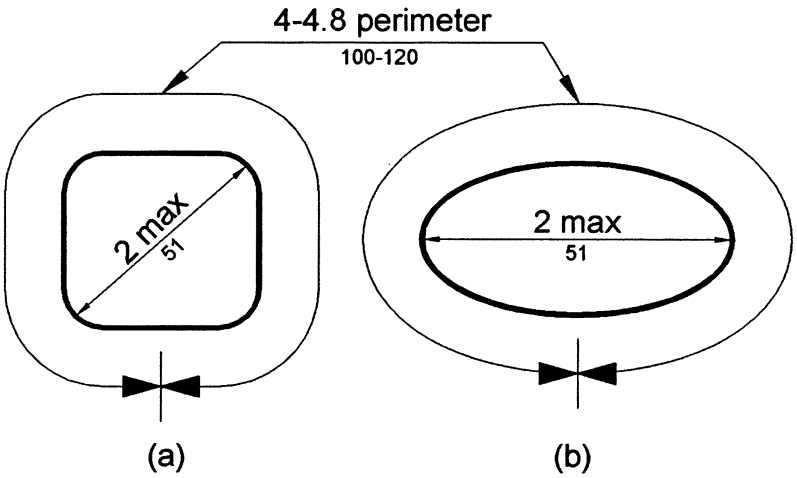

Figure T411.2.2
Grab Bar Non-Circular Cross Section

T411.3 Spacing. The space between the wall and the grab bar shall be 1 ½ inches (38 mm). The space between the grab bar and projecting objects below and at the ends shall be 1 ½ inches (38 mm) minimum. The space between the grab bar and projecting objects above shall be 12 inches (305 mm) minimum.

EXCEPTION: The space between the grab bars and shower controls, shower fittings, and other grab bars above shall be permitted to be 1 ½ inches (38 mm) minimum.

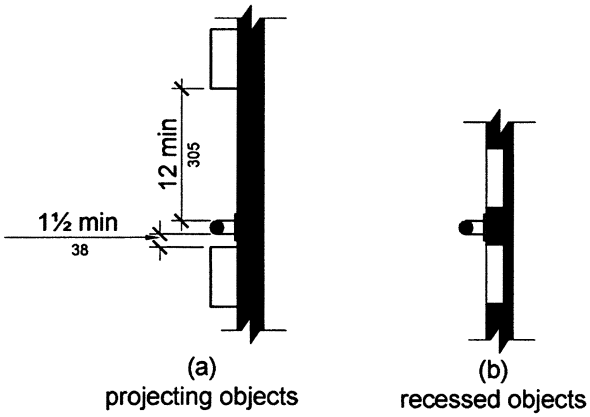

Figure T411.3
Spacing of Grab Bars

T411.4 Position of Grab Bars for Pit Toilets. Grab bars shall be installed in a horizontal position, 33 inches (840 mm) minimum and 36 inches (915 mm) maximum above the finish floor measured to the top of the gripping surface.

T411.5 Surface Hazards. Grab bars and any wall or other surfaces adjacent to grab bars shall be free of sharp or abrasive elements and shall have rounded edges.

T411.6 Fittings. Grab bars shall not rotate within their fittings.

T411.7 Installation. Grab bars shall be installed in any manner that provides a gripping surface at the specified locations and that does not obstruct the required clear floor space.

T411.8 Structural Strength. Allowable stresses shall not be exceeded for materials used when a vertical or horizontal force of 250 pounds (1112 N) is applied at any point on the grab bar, fastener, mounting device, or supporting structure.

T412 Symbol of Accessibility

T412.1 General. Symbols of accessibility shall comply with T412.

T412.2 Finish and Contrast. Symbols of accessibility and their background shall have a non-glare finish. Symbols of accessibility shall contrast with their background with either a light symbol on a dark background or a dark symbol on a light background.

> **Advisory T412.2 Finish and Contrast.** Signs are more legible for persons with low vision when characters contrast as much as possible with their background. Additional factors affecting the ease with which the text can be distinguished from its background include shadows cast by lighting sources, surface glare, and the uniformity of the text and background colors and textures.

T412.3 Symbol

T412.3.1 International Symbol of Accessibility. The International Symbol of Accessibility shall comply with Figure T412.3.1.

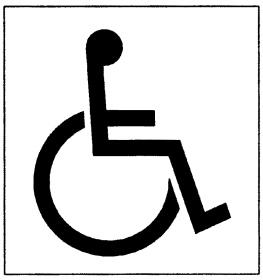

Figure T412.3.1
International Symbol of Accessibility

[FR Doc. 07–2979 Filed 6–19–07; 8:45 am]
BILLING CODE 8190–01–C

Federal Register

Wednesday,
June 20, 2007

Part III

The President

Notice of June 19, 2007—Continuation of the National Emergency With Respect to the Risk of Nuclear Proliferation Created by the Accumulation of Weapons-Usable Fissile Material in the Territory of the Russian Federation

Federal Register
Vol. 72, No. 118
Wednesday, June 20, 2007

Presidential Documents

Title 3—

The President

Notice of June 19, 2007

Continuation of the National Emergency With Respect to the Risk of Nuclear Proliferation Created by the Accumulation of Weapons-Usable Fissile Material in the Territory of the Russian Federation

On June 21, 2000, the President issued Executive Order 13159 (the ''order''), blocking property and interests in property of the Government of the Russian Federation that are in the United States, that hereafter come within the United States, or that are or hereafter come within the possession or control of United States persons that are directly related to the implementation of the Agreement Between the Government of the United States of America and the Government of the Russian Federation Concerning the Disposition of Highly Enriched Uranium Extracted from Nuclear Weapons, dated February 18, 1993, and related contracts and agreements (collectively, the ''HEU Agreements''). The HEU Agreements allow for the downblending of highly enriched uranium derived from nuclear weapons to low enriched uranium for peaceful commercial purposes. The order invoked the authority, *inter alia*, of the International Emergency Economic Powers Act, 50 U.S.C. 1701 *et seq.*, and declared a national emergency to deal with the unusual and extraordinary threat to the national security and foreign policy of the United States posed by the risk of nuclear proliferation created by the accumulation of a large volume of weapons-usable fissile material in the territory of the Russian Federation.

The national emergency declared on June 21, 2000, must continue beyond June 21, 2007, to provide continued protection from attachment, judgment, decree, lien, execution, garnishment, or other judicial process for the property and interests in property of the Government of the Russian Federation that are directly related to the implementation of the HEU Agreements and subject to U.S. jurisdiction. Therefore, in accordance with section 202(d) of the National Emergencies Act (50 U.S.C. 1622(d)), I am continuing for 1 year the national emergency with respect to weapons-usable fissile material in the territory of the Russian Federation. This notice shall be published in the **Federal Register** and transmitted to the Congress.

THE WHITE HOUSE,
June 19, 2007.

[FR Doc. 07–3063
Filed 6–19–07; 11:04 am]
Billing code 3195–01–P

Reader Aids

Federal Register

Vol. 72, No. 118

Wednesday, June 20, 2007

CUSTOMER SERVICE AND INFORMATION

Federal Register/Code of Federal Regulations	
General Information, indexes and other finding aids	**202–741–6000**
Laws	**741–6000**
Presidential Documents	
Executive orders and proclamations	**741–6000**
The United States Government Manual	**741–6000**
Other Services	
Electronic and on-line services (voice)	**741–6020**
Privacy Act Compilation	**741–6064**
Public Laws Update Service (numbers, dates, etc.)	**741–6043**
TTY for the deaf-and-hard-of-hearing	**741–6086**

ELECTRONIC RESEARCH

World Wide Web

Full text of the daily Federal Register, CFR and other publications is located at: **http://www.gpoaccess.gov/nara/index.html**

Federal Register information and research tools, including Public Inspection List, indexes, and links to GPO Access are located at: **http://www.archives.gov/federal__register**

E-mail

FEDREGTOC-L (Federal Register Table of Contents LISTSERV) is an open e-mail service that provides subscribers with a digital form of the Federal Register Table of Contents. The digital form of the Federal Register Table of Contents includes HTML and PDF links to the full text of each document.

To join or leave, go to **http://listserv.access.gpo.gov** and select *Online mailing list archives, FEDREGTOC-L, Join or leave the list (or change settings);* then follow the instructions.

PENS (Public Law Electronic Notification Service) is an e-mail service that notifies subscribers of recently enacted laws.

To subscribe, go to **http://listserv.gsa.gov/archives/publaws-l.html** and select *Join or leave the list (or change settings);* then follow the instructions.

FEDREGTOC-L and **PENS** are mailing lists only. We cannot respond to specific inquiries.

Reference questions. Send questions and comments about the Federal Register system to: **fedreg.info@nara.gov**

The Federal Register staff cannot interpret specific documents or regulations.

FEDERAL REGISTER PAGES AND DATE, JUNE

30457–30700 1
30701–30954 4
30955–31170 5
31171–31436 6
31437–31710 7
31711–31968 8
31969–32164 11
32165–32516 12
32517–32772 13
32773–33146 14
33147–33382 15
33383–33636 18
33637–33850 19
33851–34160 20

CFR PARTS AFFECTED DURING JUNE

At the end of each month, the Office of the Federal Register publishes separately a List of CFR Sections Affected (LSA), which lists parts and sections affected by documents published since the revision date of each title.

2 CFR

1400 33383

3 CFR

Proclamations:
8150 30951
8151 30953
8152 31165
8153 31167
8154 31169
8155 31967
8156 32771
Executive Orders:
13159 (See Notice of June 19, 2007) 34159
13405 (See Notice of June 14, 2007) 33381
Administrative Orders:
Notices:
Notice of June 14, 2007 33381
Notice of June 19, 2007 34159
Presidential Determinations:
No. 85-14 of July 1, 1985 (Amended by No. 07-22 of June 5, 2007) 31711
No. 92-41 of August 17, 1992 (See 07-22 of June 5, 2007) 31711
No. 98-32 of June 19, 1998 (See 07-22 of June 5, 2007) 31711
No. 07-22 of June 2007 31711

5 CFR

531 33147
550 33147

7 CFR

24 31437
28 30457
60 33851
301 .....30458, 32165
319 .....30460, 30462
400 31437
989 33851
1215 32517
Proposed Rules:
60 33917
305 .....30979, 33166
319 .....30979, 33166
354 32223
457 .....31196, 31199
905 33918
916 33919
917 33919
923 .....33918, 33922
981 31759
1212 .....30924, 30940
1240 30924

9 CFR

94 30468

10 CFR

Ch. I 33386
170 31402
171 31402
820 31904
835 31904
Proposed Rules:
2 32018
436 33696

11 CFR

104 31438
Proposed Rules:
100 31473

12 CFR

32 31441
215 30470
551 30473
915 33637
Proposed Rules:
226 32948

14 CFR

1 .....31662, 31713
23 .....31444, 31446, 31969
25 33148
39 .....30474, 30701, 30955, 30956, 30959, 30961, 30967, 30968, 31171, 31174, 31971, 31973, 31976, 31978, 31982, 31984, 31988, 32773, 32775, 32776, 32778, 32780, 32782, 32785, 32787, 32788, 33639, 33642, 33852, 33854, 33856, 33859, 33867, 33871, 33872, 33876, 33877
71 .....31714, 33151, 33644, 33645
91 31662
95 32167
97 .....31662, 32168, 32791
121 .....30946, 31449, 31662
125 31662
129 31662
135 .....30946, 31662
136 31449
158 31714
Proposed Rules:
1 32816
23 33925
25 .....32021, 32023, 33925
33 33925
35 33925
39 .....30996, 30999, 31001, 31003, 31202, 31204, 31206,

31209, 31761, 32025, 32027, 32230, 32563, 32565, 33166, 33409, 33411, 33415, 33701, 33926, 33929
71 .....30498, 30499, 30500, 31477, 33168
73.....31211
101.....32816
400.....32816
401.....32816

15 CFR

280.....30703
736.....31716
742.....33646
743.....33646
744.....33646
748.....33646
750.....33646
758.....33646
774.....31450
Proposed Rules:
744.....31005
772.....31005

17 CFR

200.....33881
240.....33564
249b.....33564

18 CFR

40.....31452
Proposed Rules:
260.....31217
284.....31217

19 CFR

10.....31990
12.....31176
24.....31719, 31990
113.....31719
128.....31719
162.....31990
163.....31990
178.....31990

20 CFR

404.....33662

21 CFR

74.....33664
510.....30970
522.....31177
558.....33386
888.....32170
1271.....33667
Proposed Rules:
2.....32030

22 CFR

9.....30971
62.....33669
121.....31452
Proposed Rules:
62.....31008
171.....33932

23 CFR

Proposed Rules:
661.....31013

24 CFR

Proposed Rules:
5.....33844
92.....33844
908.....33844
1000.....31944

26 CFR

1 .....30974, 32172, 32792, 32794, 33387
301.....30974, 32794
602.....32172, 32794
Proposed Rules:
1 .....31021, 31478, 31483, 32828, 33169, 33562, 33703, 33706, 33805
20.....31487
54.....30501

28 CFR

511.....31178
Proposed Rules:
26.....31217

29 CFR

1910.....31453
Proposed Rules:
1910.....30729
4006.....33562
4007.....33562
4022.....33152
4044.....33152

30 CFR

920.....33153
Proposed Rules:
251.....33417
917.....33177
943.....32049

31 CFR

363.....30977

32 CFR

75.....33677
Proposed Rules:
285.....33180
Ch. XVII 30734

33 CFR

100 .....30477, 30479, 32518, 33677
117 .....30481, 30483, 31725, 32004, 32005, 33156, 33881
165 .....30483, 31181, 32006, 32181, 32520, 32522, 32524, 33156, 33158, 33160, 33163, 33388, 33391, 33393, 33679, 33681, 33683, 33685, 33688, 33882, 33884, 33886, 33888, 33890, 33892, 33894, 33896, 33899
Proposed Rules:
100.....32567
117.....33423
137.....32232
165 .....33181, 33184, 33186, 33690

34 CFR

Proposed Rules:
674.....32410
682.....32410
685.....32410

36 CFR

51.....32188
223.....31437
Proposed Rules:
1195.....34074

37 CFR

201.....33690
212.....33690

38 CFR

Proposed Rules:
36.....30505

39 CFR

111.....31726
501.....33163
3000.....33164
3001.....33164
3002.....33164
3003.....33164
3004.....33164

40 CFR

51.....31727, 32526
52 .....30485, 30490, 30704, 31883, 31457, 31749, 32190, 32526, 32529, 32531, 33395, 33397, 33400, 33692
53.....32193
58.....32193
60.....32710
81 .....30485, 30490, 32190
82.....32212
94.....33694
180 .....32533, 33901, 33907
261.....31185
300.....31752
Proposed Rules:
51 .....31372, 31491, 31771
52 .....30509, 30521, 31372, 31491, 31492, 31493, 31495, 31778, 31781, 32246, 32257, 32569, 33425, 33933, 33937
53.....32266
58.....32266
78.....31771
81 .....30509, 30521, 31495, 32246, 32257, 33937
82.....32269
97.....31771
180 .....31220, 31221, 32570
261.....33284
271.....31237
745.....31022

42 CFR

136.....30706
489.....30706
Proposed Rules:
411.....31507
412.....31507
413.....31507
484.....33425
489.....31507
1001.....33430

43 CFR

12.....33383
42.....33383
43.....33383
421.....31755
423.....31755

44 CFR

65 .....31460, 31461, 31463, 31466
67.....32008
Proposed Rules:
67.....31540, 33432

47 CFR

1.....33913
2.....31190
20.....31192
64.....31948
73.....31471
80.....31192
90.....33914
Proposed Rules:
2.....32582
9.....33948
15.....33955
20.....33948
64.....31782
73.....32589
76.....31244
90.....32582
95.....32582

48 CFR

409.....31437
432.....31437
433.....31437
719.....32540
752.....32540
9901.....32809
9903.....32546, 32809
Proposed Rules:
9903.....32829

49 CFR

393.....32011, 33562
573.....32014
577.....32014
579.....32014
Proposed Rules:
367.....31048
571.....30739

50 CFR

22.....31132
224.....31756
300.....30711, 30714
635.....31688, 33401
648 .....30492, 31194, 31757, 32549, 32813
660.....31756
679 .....31472, 31758, 32559, 33408, 33695
Proposed Rules:
13.....31141
17 .....31048, 31250, 31256, 31264, 32450, 32589, 33715, 33808
18.....30670
20.....31789
21.....31268, 33188
22.....31141, 31268
224.....30534, 32605
300.....32052, 33442
635.....33442
665.....33442
679.....31548, 33732
697.....32830, 33955

REMINDERS

The items in this list were editorially compiled as an aid to Federal Register users. Inclusion or exclusion from this list has no legal significance.

RULES GOING INTO EFFECT JUNE 20, 2007

AGRICULTURE DEPARTMENT

Agricultural Marketing Service

Raisins produced from grapes grown in California

Correction; published 6-20-07

ENVIRONMENTAL PROTECTION AGENCY

Pesticides; tolerances in food, animal feeds, and raw agricultural commodities:

Imidacloprid; published 6-20-07

Lactofen; published 6-20-07

TRANSPORTATION DEPARTMENT

Federal Aviation Administration

Airworthiness directives:

Hawker Beechcraft Corp.; published 6-19-07

COMMENTS DUE NEXT WEEK

COMMERCE DEPARTMENT

National Oceanic and Atmospheric Administration

Fishery conservation and management:

Alaska; fisheries of Exclusive Economic Zone—

Bering Sea and Aleutian Islands groundfish; comments due by 6-29-07; published 4-30-07 [FR E7-08190]

Bering Sea and Aleutian Islands groundfish; comments due by 6-29-07; published 5-30-07 [FR E7-09828]

West Coast States and Western Pacific fisheries—

Pacific Coast salmon; comments due by 6-28-07; published 5-15-07 [FR E7-09329]

DEFENSE DEPARTMENT

Defense Acquisition Regulations System

Acquisition regulations:

Excessive pass-through charges; comments due by 6-25-07; published 4-26-07 [FR E7-07905]

EDUCATION DEPARTMENT

Grants:

Direct Grant Programs; comments due by 6-25-07; published 5-24-07 [FR E7-10036]

ENVIRONMENTAL PROTECTION AGENCY

Air pollutants, hazardous; national emission standards:

Risk and technology review (Phase II, Group 2); comments due by 6-29-07; published 5-25-07 [FR E7-10128]

Air quality implementation plans; approval and promulgation; various States; air quality planning purposes; designation of areas:

Pennsylvania; comments due by 6-29-07; published 5-30-07 [FR E7-10356]

Air quality implementation plans; approval and promulgation; various States:

California; comments due by 6-29-07; published 5-30-07 [FR E7-10236]

Florida; comments due by 6-25-07; published 5-25-07 [FR E7-10063]

Georgia; comments due by 6-25-07; published 5-24-07 [FR E7-10057]

Indiana; comments due by 6-29-07; published 5-30-07 [FR E7-10317]

Pesticide programs:

Plant-incorporated protectant tolerance exemptions; administrative revisions; comments due by 6-25-07; published 4-25-07 [FR E7-07768]

Pesticides; tolerances in food, animal feeds, and raw agricultural commodities:

Propiconazole; comments due by 6-25-07; published 4-25-07 [FR E7-07678]

Solid wastes:

Safe and environmentally sound recycling and resource conservation; and solid waste definition revisions; comments due by 6-25-07; published 4-24-07 [FR E7-07761]

FEDERAL RESERVE SYSTEM

Consumer leasing (Regulation M):

Electronic disclosures delivery; comments due by 6-29-07; published 4-30-07 [FR E7-07877]

Electronic fund transfers (Regulation E):

Electronic disclosures delivery; comments due by 6-29-07; published 4-30-07 [FR E7-07876]

Equal Credit Opportunity (Regulation B):

Electronic disclosures delivery; comments due by 6-29-07; published 4-30-07 [FR E7-07875]

Truth in lending (Regulation Z):

Electronic disclosures delivery; comments due by 6-29-07; published 4-30-07 [FR E7-07878]

Truth in savings (Regulation DD):

Electronic disclosures delivery; comments due by 6-29-07; published 4-30-07 [FR E7-07873]

HEALTH AND HUMAN SERVICES DEPARTMENT

Centers for Medicare & Medicaid Services

Medicare:

Home health prospective payment system; refinement and rate update (2008 CY); comments due by 6-26-07; published 5-4-07 [FR 07-02167]

Skilled nursing facilities; prospective payment system and consolidated billing (2008 FY); comments due by 6-29-07; published 5-4-07 [FR 07-02180]

HOMELAND SECURITY DEPARTMENT

U.S. Citizenship and Immigration Services

Immigration:

Religious workers; immigrant and nonimmigrant classification; petition requirement; comments due by 6-25-07; published 4-25-07 [FR E7-07743]

INTERIOR DEPARTMENT

Surface Mining Reclamation and Enforcement Office

Permanent program and abandoned mine land reclamation plan submissions:

Texas; comments due by 6-26-07; published 6-11-07 [FR E7-11193]

NUCLEAR REGULATORY COMMISSION

Rulemaking petitions:

Union of Concerned Scientists; comments due by 6-25-07; published 4-9-07 [FR E7-06644]

PERSONNEL MANAGEMENT OFFICE

Pay administration:

Critical position pay authority; comments due by 6-25-07; published 4-25-07 [FR E7-07763]

POSTAL SERVICE

Domestic Mail Manual:

Delivery confirmation service required for Priority Mail Open and Distribute containers; electronic option; comments due by 6-25-07; published 5-24-07 [FR E7-09967]

TRANSPORTATION DEPARTMENT

Federal Aviation Administration

Airworthiness directives:

Aerospatiale; comments due by 6-25-07; published 5-24-07 [FR E7-10046]

Airbus; comments due by 6-25-07; published 5-24-07 [FR E7-10043]

Boeing; comments due by 6-29-07; published 4-30-07 [FR E7-07850]

Empresa Braileira de Aeronauica S.A. (EMBRAER); comments due by 6-29-07; published 4-30-07 [FR E7-07841]

Empresa Brasileira de Aeronautica S.A. (EMBRAER); comments due by 6-25-07; published 5-24-07 [FR E7-10026]

Learjet; comments due by 6-25-07; published 4-26-07 [FR E7-07640]

Lockheed; comments due by 6-25-07; published 5-24-07 [FR E7-10033]

M7 Aerospace LP; comments due by 6-29-07; published 4-30-07 [FR E7-08163]

Pilatus Aircraft Ltd.; comments due by 6-29-07; published 5-30-07 [FR E7-10315]

TREASURY DEPARTMENT

Internal Revenue Service

Income taxes:

Taxpayers claiming direct and indirect foreign tax credits; paid tax amounts determination for Section 901 purposes; hearing; comments due by 6-28-07; published 3-30-07 [FR E7-05862]

LIST OF PUBLIC LAWS

This is a continuing list of public bills from the current

session of Congress which have become Federal laws. It may be used in conjunction with "PLUS" (Public Laws Update Service) on 202–741–6043. This list is also available online at *http://www.archives.gov/federal-register/laws.html*.

The text of laws is not published in the **Federal Register** but may be ordered in "slip law" (individual pamphlet) form from the Superintendent of Documents, U.S. Government Printing Office, Washington, DC 20402 (phone, 202–512–1808). The text will also be made available on the Internet from GPO Access at *http://www.gpoaccess.gov/plaws/index.html*. Some laws may not yet be available.

S. 214/P.L. 110–34
Preserving United States Attorney Independence Act of 2007 (June 14, 2007; 121 Stat. 224)

H.R. 1675/P.L. 110–35
Preservation Approval Process Improvement Act of 2007 (June 15, 2007; 121 Stat. 225)

S. 1104/P.L. 110–36
To increase the number of Iraqi and Afghani translators and interpreters who may be admitted to the United States as special immigrants, and for other purposes. (June 15, 2007; 121 Stat. 227)

Last List June 6, 2007

Public Laws Electronic Notification Service (PENS)

PENS is a free electronic mail notification service of newly enacted public laws. To subscribe, go to *http://listserv.gsa.gov/archives/publaws-l.html*

Note: This service is strictly for E-mail notification of new laws. The text of laws is not available through this service. **PENS** cannot respond to specific inquiries sent to this address.